UNITED STATES
NUCLEAR REGULATORY COMMISSION
WASHINGTON, D.C. 20555-0001

May 3, 2000

APPLICANT: Westinghouse Electric Company

FACILITY: AP1000 Standard Plant Design

SUBJECT: MEETING SUMMARY ON AP1000 DESIGN

The subject meeting was held on April 27, 2000, at the headquarters of the U.S. Nuclear Regulatory Commission (NRC) between representatives of Westinghouse and the NRC staff. Enclosure 1 is a list of meeting attendees and Enclosure 2 is the meeting agenda. Enclosures 3, 4, and 5 are the handouts provided by Westinghouse during the meeting.

Westinghouse requested this meeting with the staff to explain why they are increasing the power rating of the AP600 design to 1000 MWe and to request NRC feedback on the scope and cost for a design certification review of the AP1000 design. Westinghouse's proposal is summarized in the "AP1000 Overview" handout (Enclosure 3) and details of the changes to the AP600 design are described in the "AP1000 Detailed Summary" handout (Enclosure 4). Westinghouse's goal is to minimize the changes to the AP600 design and retain the objectives and design detail, licensing basis, and risk basis of the AP600 design. By achieving these goals, Westinghouse believes that the NRC can limit the scope of the design certification review of the AP1000 design and thereby minimize the review costs. Westinghouse also provided a copy of the "Tier 2 Master Table of Contents" (Enclosure 5) from the AP600 design control document (DCD) that indicates the portions of the DCD that will be changed for the AP1000 design.

Mr. Collins (Director, NRR) instructed Westinghouse to send the NRC a letter that sets forth its request for the AP1000 review. Mr. Collins stated that the NRC would use a three-phase approach in response to Westinghouse's request for feedback: (1) scoping, (2) feasibility study, and (3) actual review of design certification application. The purpose of the scoping phase would be to identify the assumptions, questions, and review guidance that the NRC staff would evaluate during the feasibility study and to estimate the NRC resources that would be needed to perform the feasibility review. The staff would then provide a resource estimate to Westinghouse and get their approval to proceed. The purpose of the feasibility study would be to determine if the NRC staff agreed with Westinghouse's assumptions and guidelines for performing the AP1000 review. Westinghouse agreed with this approach.

Jerry Wilson

Jerry N. Wilson, Senior Policy Analyst
License Renewal and Standardization Branch
Division of Regulatory Improvement Programs
Office of Nuclear Reactor Regulation

Project No. 694

Enclosures: As stated

cc w/o encls: See next page

Westinghouse Electric Corporation

Mr. Brian A. McIntyre, Manager
Advanced Plant Safety & Licensing
Westinghouse Electric Company
P.O. Box 355
Pittsburgh, PA 15230

Mr. H. A. Sepp
Advanced Plant Safety & Licensing
Westinghouse Electric Company
P.O. Box 355
Pittsburgh, PA 15230

Ms. Lynn Connor
Doc- Search Associates
Post Office Box 34
Cabin John, MD 20818

Ms. Susan Fanto
Advanced Plant Safety & Licensing
Westinghouse Electric Corporation
Energy Systems Business Unit
P.O. Box 355
Pittsburgh, PA 15230

Mr. Jack Bastin
Westinghouse Electric Company
11921 Rockville Pike
Suite 107
Rockville, MD 20852

Barton Z. Cowan, Esq.
Eckert Seamans Cherin & Mellott
600 Grant Street 42nd Floor
Pittsburgh, PA 15219

Mr. Charles Thompson, Program Manager
AP600 Certification
NE-50
19901 Germantown Road
Germantown, MD 20874

Mr. Ed Rodwell, Manager
PWR Design Certification
Electric Power Research Institute
3412 Hillview Avenue
Palo Alto, CA 94303

UNITED STATES
NUCLEAR REGULATORY COMMISSION
WASHINGTON, D.C. 20555-0001

April 27, 2000 @ 8:30 am

Attendance List for
Public Meeting on AP1000

Name	Affiliation	Mailstop or Email
Jerry N. Wilson	NRC/NRR/DRIP/RLSB	0-12 G15
George Hubbard	NRC/NRR/DSSA	0-11A11
Jared Wermiel	NRC/NRR/DSSA	0-10B3, jsw1@nrc.gov
Mike Corletti	Westinghouse	
ED CUMMINS	WESTINGHOUSE	
Arthur McIntyre	Westinghouse	
CHARLES BRINKMAN	ABB C-E Nuclear Power	
Chang-Yang Li	NRC/NRR/DSSA	0-11A11
Nick Saltos	NRC/NRR/DSSA	0-10H4
BRIAN SHERON	NRC/NRR/	BWS@NRC.GOV
JACK STROSNIDER	NRC/NRR/DE	JRS2@NRC.GOV
FAROUK ELTAWILA	NRC/RES	FXE@NRC.GOV
David Terao	NRC/NRR/EMEB	DXT@NRC.GOV
NOEL DUDLEY	ACRS	NFD@NRC.GOV
Thomas Cheng	NRC/NRR/EMEB	TMC@NRC.GOV
DAVID MATTHEWS	NRC/NRR/DRIP	DBM@NRC.GOV
Sam Collins	NRC/NRR	SJC1@NRC.GOV
Jon Johnson	NRC/NRR	JRJ
David Bessette	NRC/RES	DRB@NRC.GOV T10K8

Enclosure 1

WESTINGHOUSE AP1000

OVERVIEW AND DETAILED SUMMARY

APRIL 27, 2000

I.	Introduction	Ed Cummins
II.	Overview	Mike Corletti / Brian McIntyre
	Objectives	
	Purpose of Meeting	
	Design Approach	
	Licensing Approach	
	Feedback / Discussion	
III.	III. Detailed Summary	Mike Corletti / Brian McIntyre
	Introduction	
	Design Approach	
	Detailed Design Summary	
	DCD Section Change Summary	
VI.	Discussion	All

AP1000 Overview

April 27, 2000

Westinghouse Electric Company

Enclosure 3

Introduction

- AP600 meets industry objectives defined in EPRI ALWR Utility Requirements Document

- Electric generation environment has significantly changed over last decade
  - Target generation cost < $0.03 $/kwh

- This motivated W to consider major uprate alternatives
  - Technical feasibility for AP1000 is established
  - Exploring licensing feasibility

AP600 Major Uprate - Objectives

- Increase Plant Power Rating to Reduce Cost
  - Obtain a capital cost that can compete in U.S. market $900-1000/KW for n^{th} twin plant
- Retain AP600 Objectives and Design Detail
- Retain AP600 Licensing Basis
- Retain AP600 Risk Basis

Purpose of Meeting

- Explain AP600 Major Uprate Initiative
  - Objectives / Design Approach
  - Design Features
  - Safety System Assessments
- Licensing Options
  - U.S. NRC - design certification
  - International - first project
- NRC Feedback
  - Estimates to certify
  - Comments on approach

AP600 Major Uprate

- Design Approach
  - Increase the capability/capacity within "space constraints" of AP600
  - Meet regulatory requirements
  - Retain credibility of "proven components"
  - Retain AP600 plant design (footprint)
  - Retain the basis for the cost estimate, construction schedule and modularization scheme

Comparison of Selected Parameters

PARAMETER	AP600	AP1000
Net Electric Output, MWe	600	> 1000
Reactor Power, MWt	1933	2993
Hot leg temperature, °F	600	615
Number of Fuel Assemblies	145	157
Type of Fuel Assembly	17x17	17x17
Active Fuel Length, ft.	12	14
Core Loading, MTU	66.90	84.50
Linear Heat Rating, kw/ft	4.10 (13.5 kw/m)	5.03 (16.6 kw/m)
Average Power Density, kw/liter	78.82	96.6
R/V I.D., inches	157 (3988 mm)	157 (3988 mm)
Steam Generator	Δ75	Δ125
Reactor Coolant Pump Flow, gpm	51,000	65,000
Pressurizer, ft^3	1600	1800

AP600 Major Uprate to 1000 MWe

- Select proven core design
  - Doel 3, Tihange 4
    - 3000 MWt
    - 14 ft active fuel length; 17x17 fuel
    - 157 fuel assemblies
- Size Key NSSS components
  - Reactor Vessel/Head - 3-Loop with reflector
  - Steam Generator - Δ125 similar to ANO replacement
  - Reactor Coolant Pump - increase capacity
  - Pressurizer - increase volume

AP1000 General Arrangement

Plan at Elevation 135'

AP600

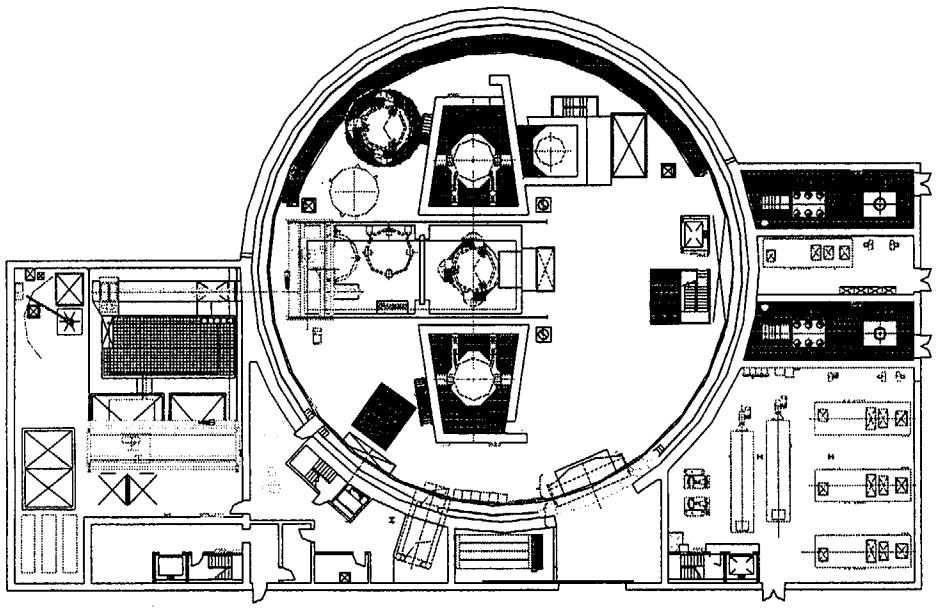

AP1000

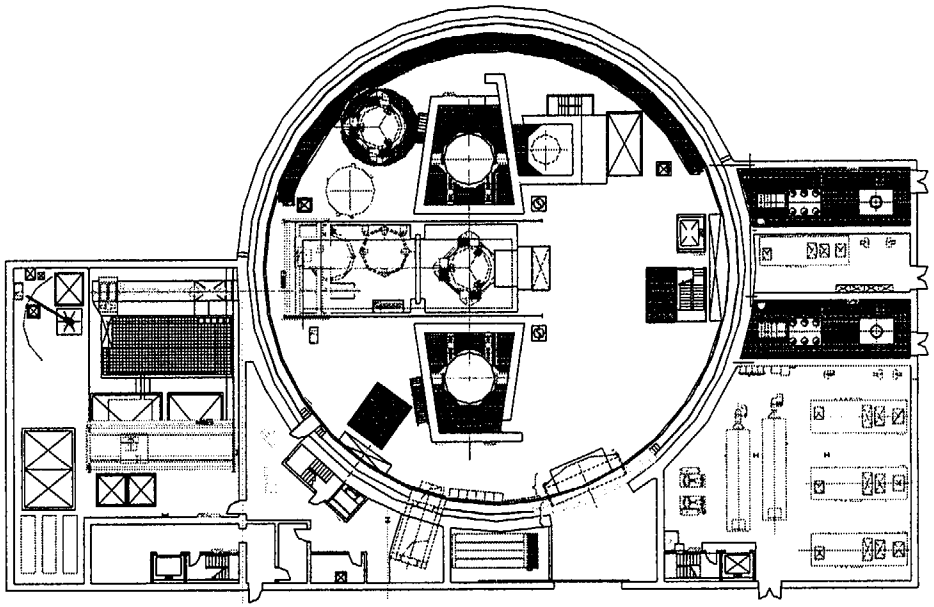

AP1000 General Arrangement

Containment Section View

AP600

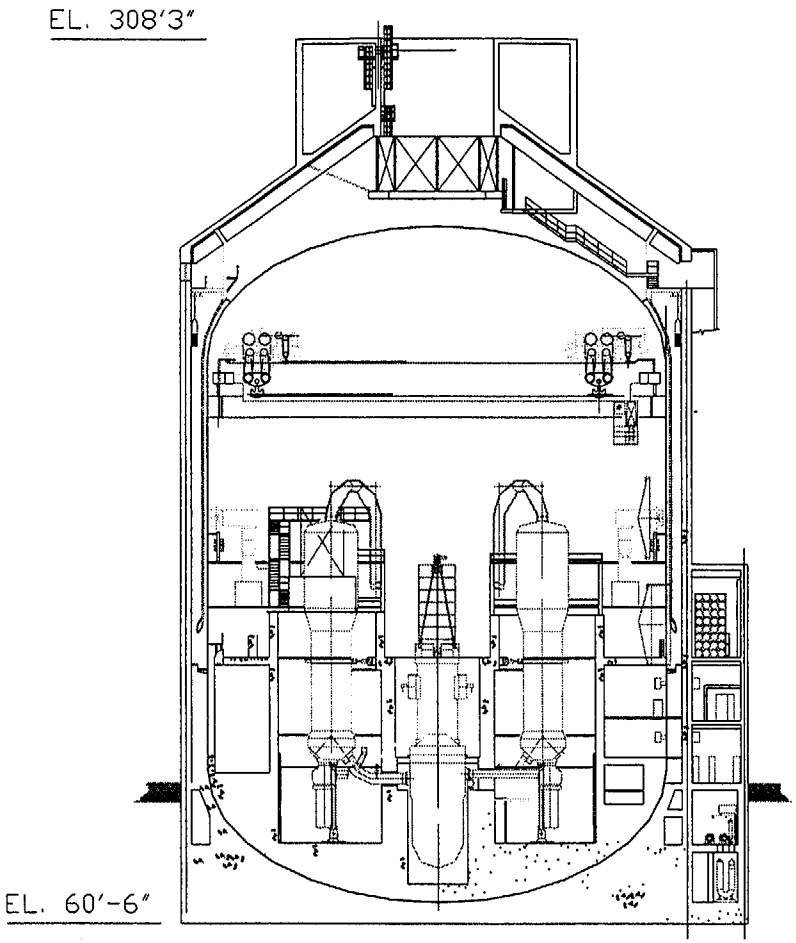

AP1000

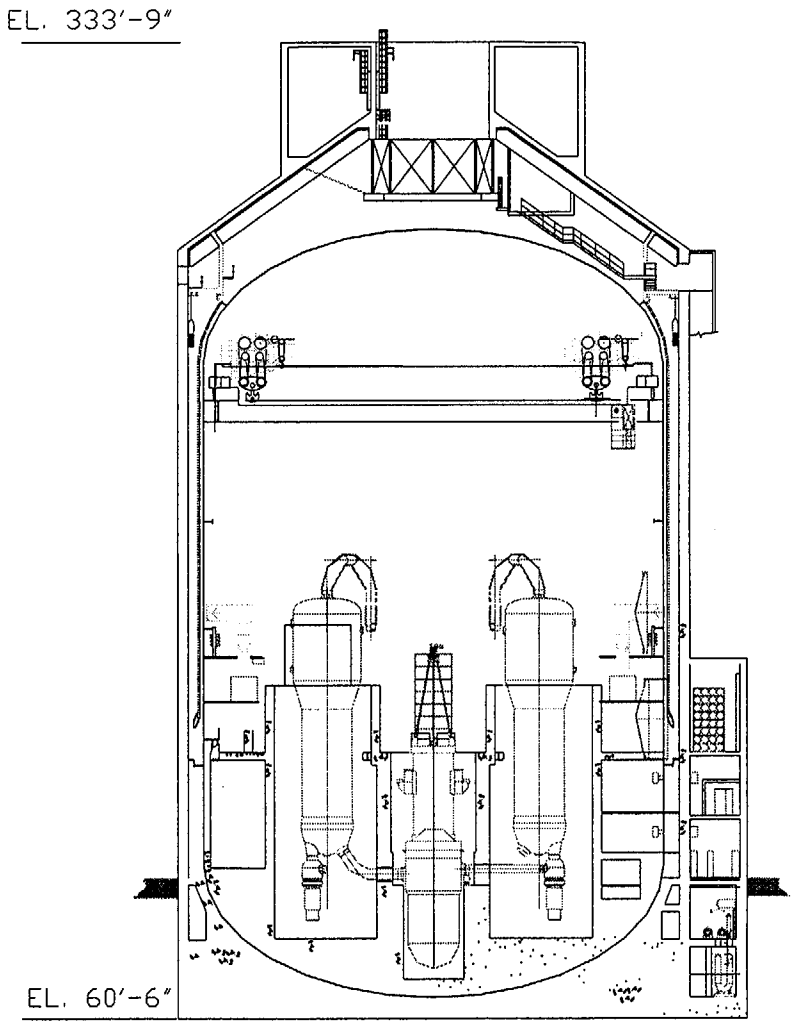

Overview of Licensing Approach

- Majority of AP600 DCD applicable to AP1000
  - NRC review only changed sections
    - Assessment of AP600 DCD performed on a subsection basis
    - Results of assessment provided to NRC
  - Selected resource intensive activities deferred to COL
      - Seismic analysis
      - Structural design
      - Piping design
    - Methodology and acceptance criteria from AP600 retained
    - COL items added to address these areas
  - Use same codes and standards as AP600
    - Exceptions will be delineated
  - Initial submittal at DCD level
    - W will delineate changes from AP600 DCD

Applicability of AP600 DCD

- Assessment of AP600 DCD Completed
  - Determine scope of changes for AP1000
  - 18 Chapters reviewed - 82% “unchanged”
    - Approximately 800 subsections reviewed
      - 51% of subsections unchanged
      - 31% of subsections require only a change in plant name
        - AP600 -> AP1000
      - 10% of subsections require more significant text changes
        - system descriptions / figures revised
        - no analysis / calculations required
      - 6% of subsections require significant changes including analytical results
      - 2 % of subsections withdrawn

TIER 2 MASTER TABLE OF CONTENTS

Section	Title	Page
CHAPTER 1	INTRODUCTION AND GENERAL DESCRIPTION OF THE PLANT	1.1-1
1.1	Introduction	1.1-1
	AP600 to AP1000	
1.1.1	Plant Location	1.1-1
	AP600 to AP1000	
1.1.2	Containment Type	1.1-1
	No Change	
1.1.3	Reactor Type	1.1-1
	AP600 to AP1000	
1.1.4	Power Output	1.1-1
	Power rating revised	
1.1.5	Schedule	1.1-1
	AP600 to AP1000	
1.1.6	Format and Content	1.1-2
	AP600 to AP1000	
1.1.7	Combined License Information	1.1-3
	AP600 to AP1000	
1.2	General Plant Description	1.2-1
	AP600 to AP1000	
1.2.1	Design Criteria, Operating Characteristics, and Safety Considerations	1.2-1
	AP600 to AP1000	
	Power rating revised	
	Hot leg temperature increased	
	Reactor coolant system design description revised	
	Turbine Island design description revised	
1.2.2	Site Description	1.2-15
	AP600 to AP1000	
1.2.3	Plant Arrangement Description	1.2-16
	AP600 to AP1000	
	General arrangement drawings 1.2-9, 1.2-12, 1.2-13, 1.2-14, 1.2-15, 1.2-16	
1.2.4	Nuclear Island	1.2-16
	No Text Change	
	General arrangement drawings 1.2-9, 1.2-12, 1.2-13, 1.2-14, 1.2-15, 1.2-16	
1.2.5	Annex Building	1.2-25
	No Change	
1.2.6	Diesel Generator Building	1.2-25
	No Change	
1.2.7	Radwaste Building	1.2-26
	No Change	
1.2.8	Turbine Building	1.2-27
	No Text Change	

AP1000 Licensing Approach

- Same approach to passive plant issues
  - Safe shutdown requirements for passive plants
  - No safety-related AC power required
  - 7-day on-site coping capability provided
  - Nonsafety availability controls provided

AP1000 Approach to Safety Analysis

- Use NRC-approved AP600 computer codes
  - LOFTRAN: Transients
  - NOTRUMP: SBLOCA
  - W COBRA-TRAC: LBLOCA
  - W GOTHIC: Containment
  - Use AP600 insights with regard to limiting events, combination of failures, etc. to establish Chapter 15 analysis scope
- Revalidation of codes for AP1000 not required
  - Basic phenomena same as AP600
  - Applicability of test program to AP1000 will be addressed:
    - Revalidate Phenomena Identification and Ranking Table (PIRT)
    - Check that High-Ranked PIRT phenomena are adequately scaled using same criteria as for AP600
  - No additional tests required

AP1000 Approach to PRA

- AP1000 design changes consider PRA
  - Success criteria maintained
  - System configurations maintained
- AP600 PRA quantification is maintained
  - Submit AP1000 PRA sensitivity study
    - Demonstrate AP600 PRA valid for AP1000
      - Confirm initiating event frequencies
      - Confirm success criteria
      - Core damage frequency and large release frequency
        - No appreciable change in CDF / LRF expected
        - IVR maintained
    - Demonstrate AP600 insights valid for AP1000

Seismic Analysis and Structural Design

- Methodology and acceptance criteria identical to AP600
  - Results of seismic analyses to be submitted by COL Applicant
    - (DCD Section 3.7.2)
  - Results of structural design to be submitted by COL Applicant
    - (DCD Section 3.8)
- AP1000 DCD will provide structural arrangement and confirm feasibility of changes to AP600
  - Increase in height of containment and shield building
  - Shield building roof
  - Nuclear island stability
  - Nuclear island basemat

Piping Analysis

- Methodology and acceptance criteria identical to AP600
  - Results of piping analyses to be submitted by COL Applicant

Approach to ITAACS

- Only changes to AP600 ITAAC will be:
  - Differences in acceptance criterion due to design changes
    - PCS water storage tank volume
    - Pump inertia
    - Safety valve capacity
  - Possible ITAAC changes due to reduced scope of Certified Design

NRC Feedback

- Westinghouse requests NRC
  - Agree to scope and proposed approach
  - Provide schedule and cost estimate for Design Certification
  - Provide comments

AP1000 Detailed Summary

April 27, 2000

Westinghouse Electric Company

Enclosure 4

AP600 Major Uprate - Objectives

- Increase Plant Power Rating to Reduce Cost
  - Obtain a capital cost that can compete in U.S. market $900-1000/KW for n^{th} twin plant
- Retain AP600 Objectives and Design Detail
- Retain AP600 Licensing Basis
- Retain AP600 Risk Basis

AP600 Major Uprate

- Design Approach
  - Increase the capability/capacity within “space constraints” of AP600
  - Meet regulatory requirements
  - Retain credibility of “proven components”
  - Retain AP600 plant design (footprint)
  - Retain the basis for the cost estimate, construction schedule and modularization scheme

Comparison of Selected Parameters

PARAMETER	AP600	AP1000
Net Electric Output, MWe	600	> 1000
Reactor Power, MWt	1933	2993
Hot leg temperature, °F	600	615
Number of Fuel Assemblies	145	157
Type of Fuel Assembly	17x17	17x17
Active Fuel Length, ft.	12	14
Core Loading, MTU	66.90	84.50
Linear Heat Rating, kw/ft	4.10 (13.5 kw/m)	5.03 (16.6 kw/m)
Average Power Density, kw/liter	78.82	96.6
R/V I.D., inches	157 (3988 mm)	157 (3988 mm)
Steam Generator	Δ75	Δ125
Reactor Coolant Pump Flow, gpm	51,000	65,000
Pressurizer, ft^3	1600	1800

AP600 Major Uprate to 1000 MWe

- Select proven core design
  - Doel 3, Tihange 4
    - 3000 MWt
    - 14 ft active fuel length; 17x17 fuel
    - 157 fuel assemblies
- Size Key NSSS components
  - Reactor Vessel/Head - 3-Loop with reflector
  - Steam Generator - Δ125 similar to ANO replacement
  - Reactor Coolant Pump - increase capacity
  - Pressurizer - increase volume

Core Design

AP600

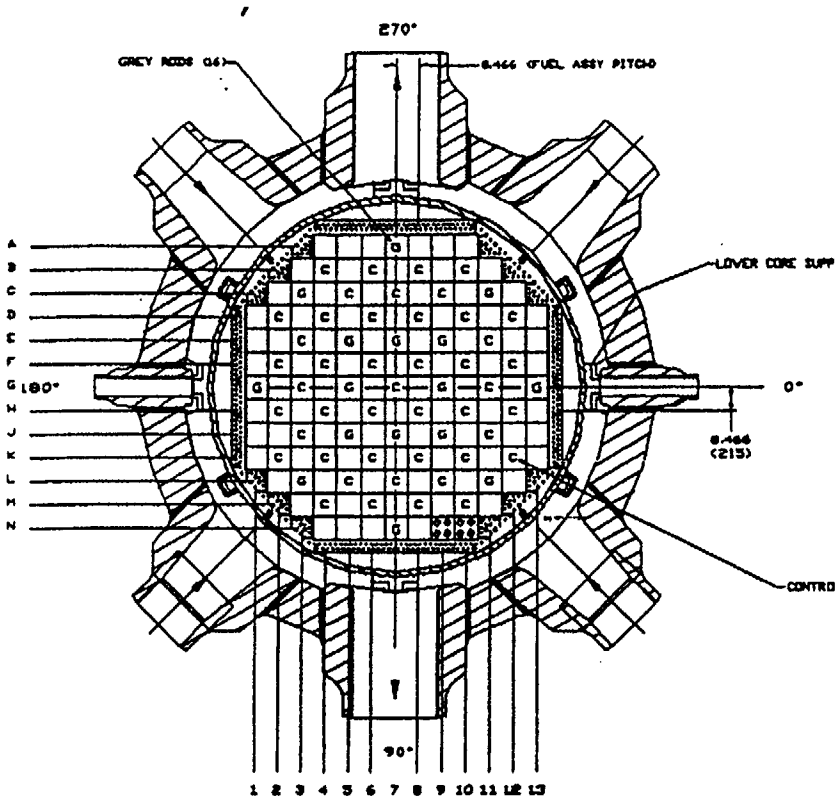

AP1000

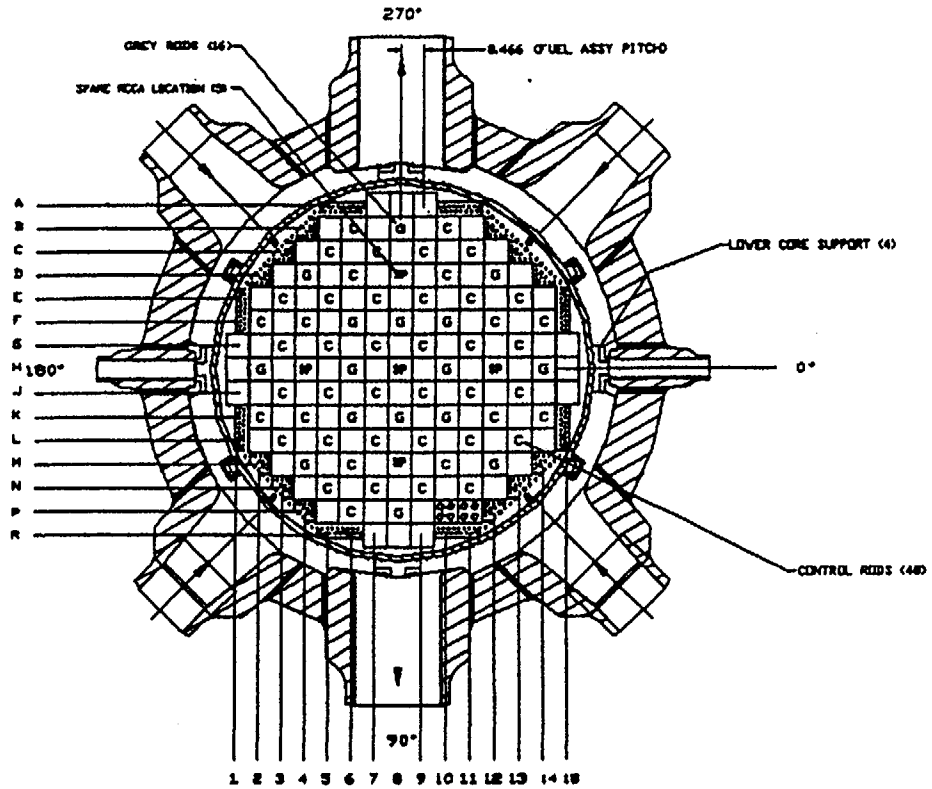

- Number of Fuel Assemblies Increased from 145 to 157
- Active fuel length increased from 12 ft to 14 ft

Reactor Coolant Loop Deisgn

- Same design as AP600
  - Elevations of hot leg and cold leg piping maintained
    - Reactor vessel thermal center lowered
    - Steam generator thermal center raised
  - Pipe sizes are the same as AP600
  - Surge line design is the same as AP600

Reactor Vessel Design Overview

- Reactor vessel
  - Maintains key AP600 design features
  - No bottom-mounted instrumentation
  - 60 year design life
  - Longer to accommodate longer fuel assemblies
- Lower internals
  - AP600-type internals
  - Lower core support plate thickness increased to accommodate heavier fuel
- Radial reflector
  - Modified to permit additional fuel assemblies
  - Tsuruga 3/4 radial reflector "lessons-learned"
- Integrated Head Package
  - Modified to accommodate longer fuel

Reactor Vessel

with Integrated Head Package

AP600

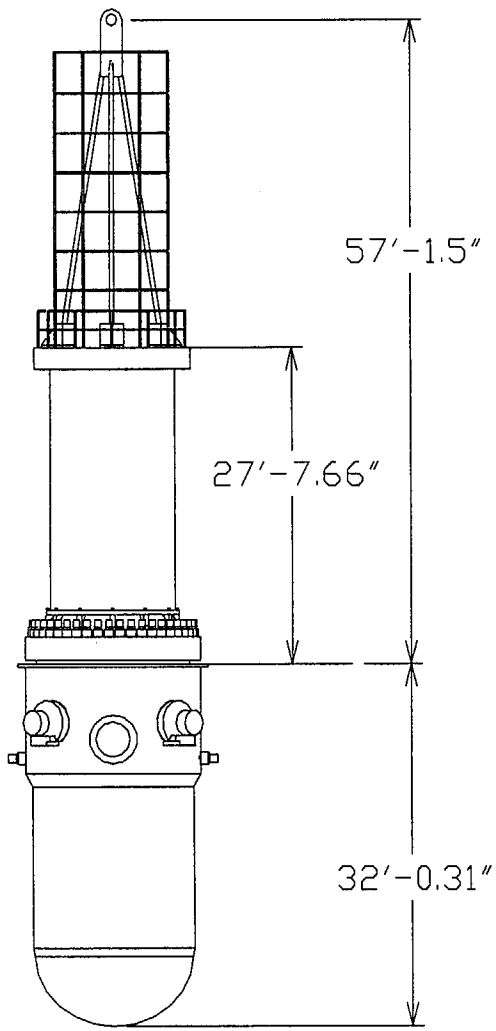

AP1000

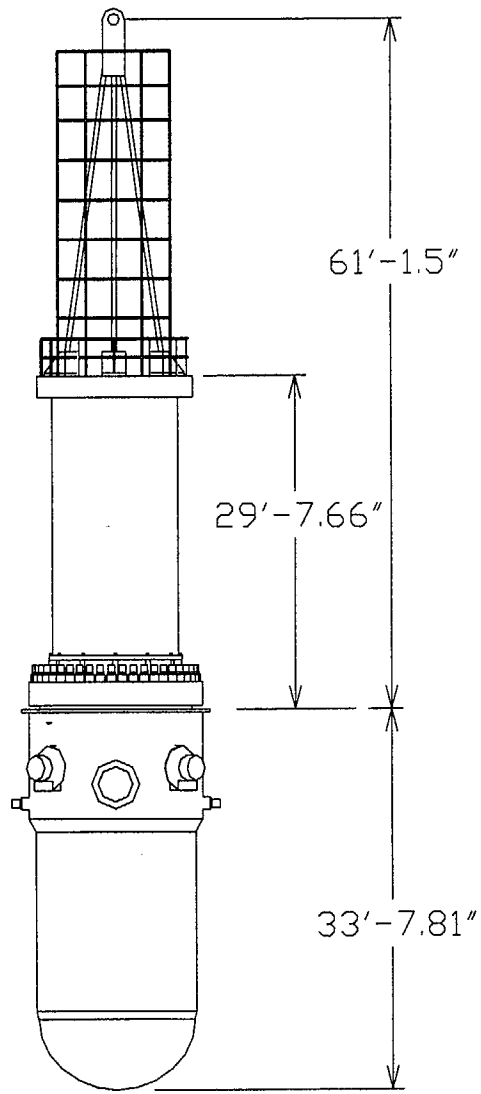

Steam Generator Design

- AP1000 Δ125 Steam Generator
  - Based on Westinghouse proven designs
    - ANO (Arkansas) Replacement SG
      - 1500 MWt per SG
      - Inconel 690 thermally treated tubes

Steam Generator

AP600

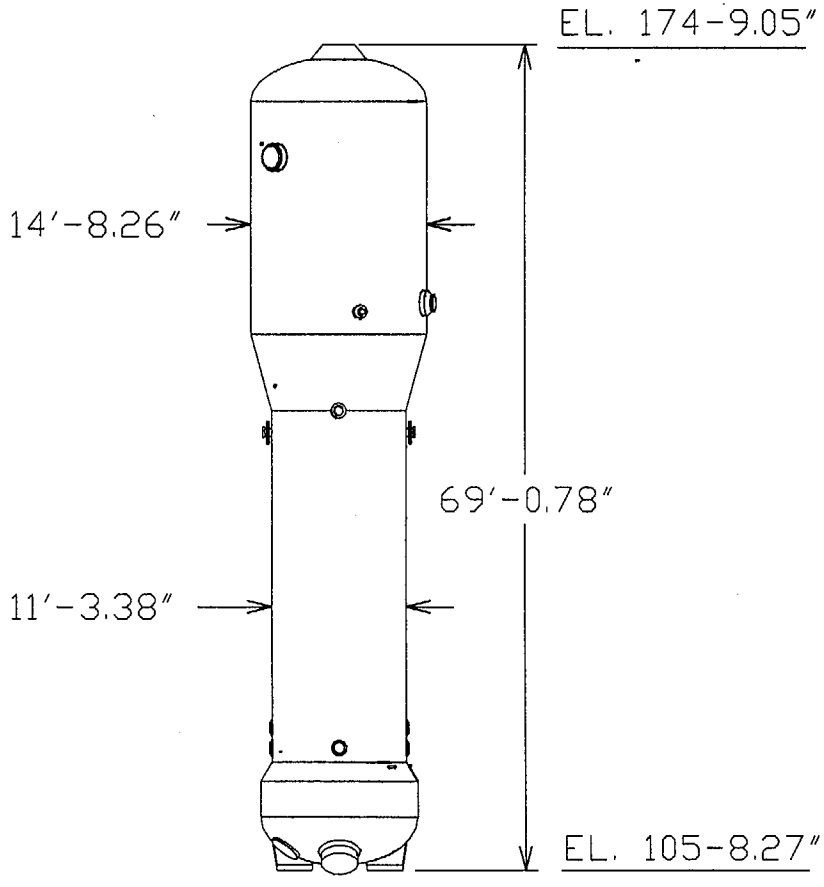

AP1000

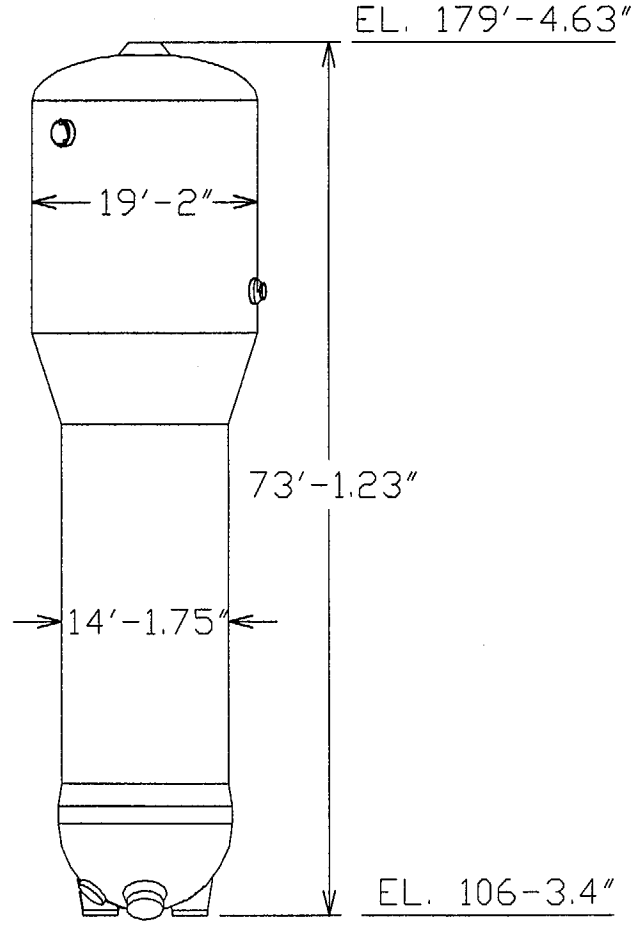

Reactor Coolant Pump

- AP600 RCP based on proven motor design
- Increase capacity for AP1000
  - AP1000 higher power density core requires longer flow coast down - more pump inertia
  - Pump flow requirements increased to accommodate higher core power
- Impacts to pump design minimized
  - Use motor rating at hot coolant condition
  - Variable speed controller added to reduce motor power in cold coolant conditions
  - Use high-efficiency hydraulics - scaled from Tsuruga 3/4
  - Canned motor similar to AP600 size

Reactor Coolant Pump

AP600

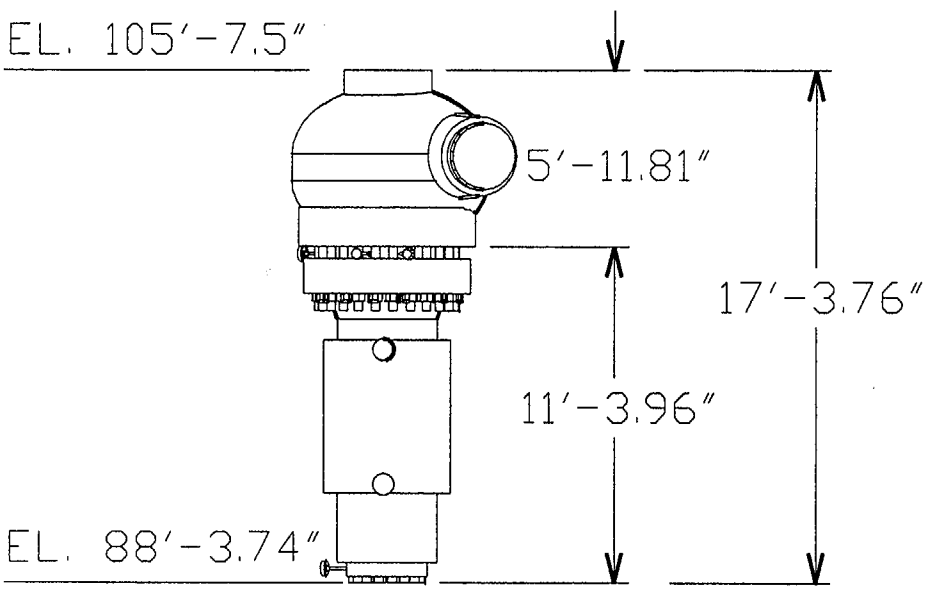

AP1000

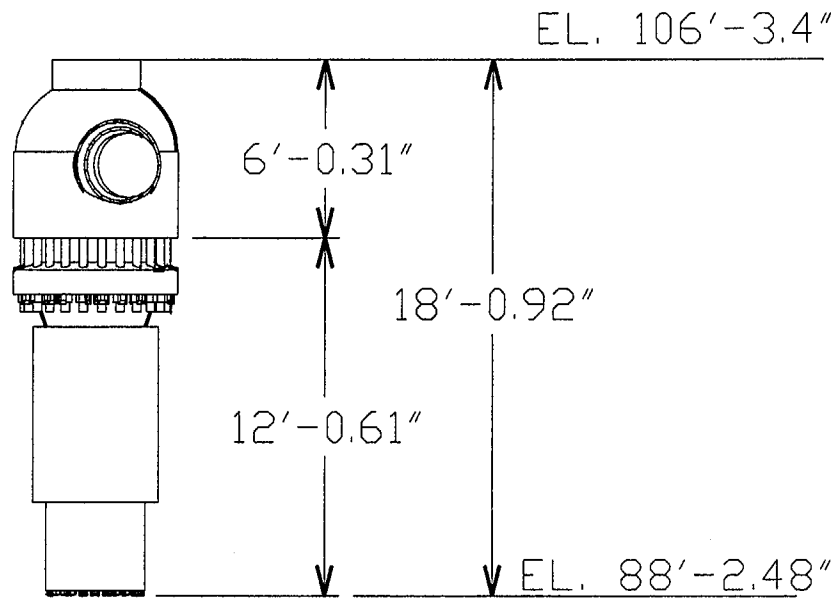

Parameter	AP600	AP1000
Design Flow, gpm	51,000	65,000
Design Head, ft	240	275
Rotating Inertia, lb-ft^2	5,000	10,000
Motor Rating, Hp	3200	4000

Steam Generator and Pump

AP600

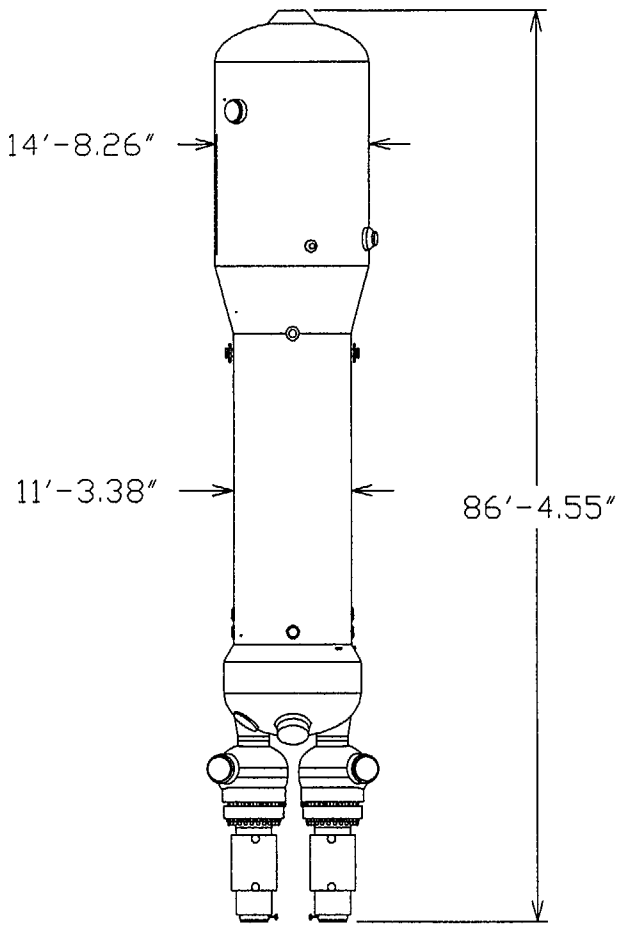

AP1000

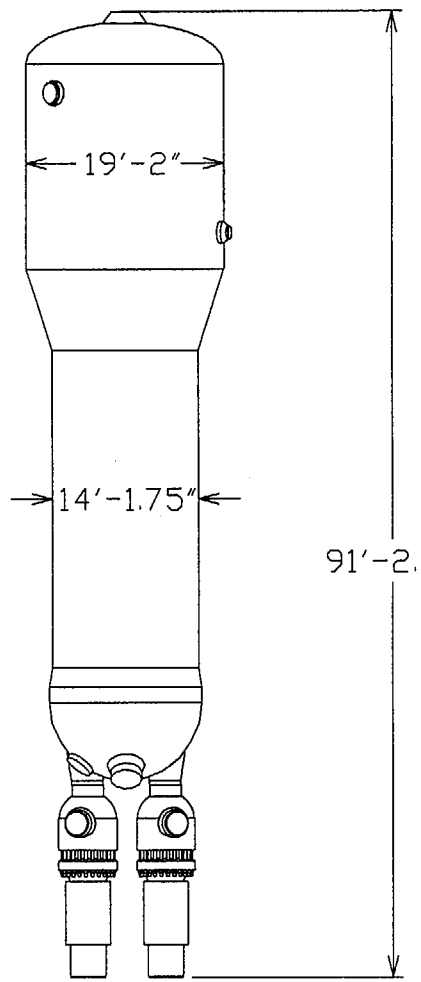

Pressurizer

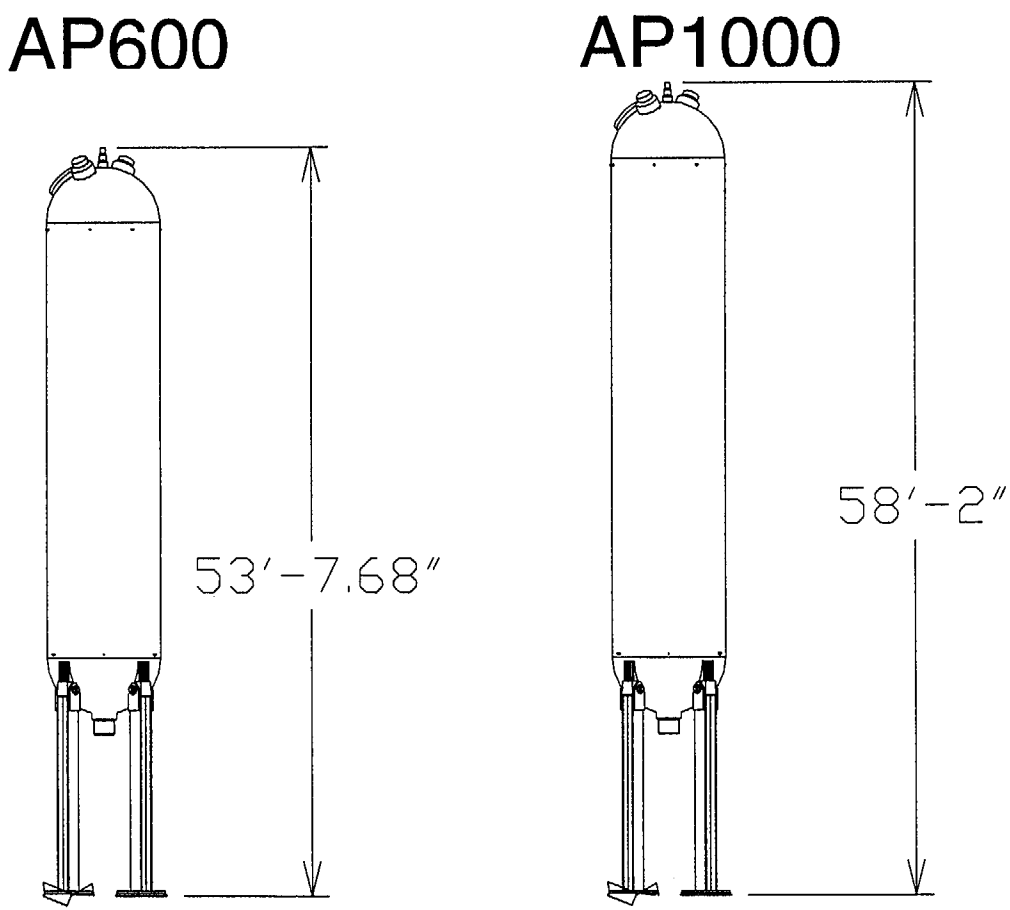

- Pressurizer volume increased from 1600 ft^3 to 1800 ft^3 which is the same size as most 4-loop Westinghouse PWRs.

Safety System Assessments Completed

- Containment and PCS cooling
  - Containment volume increased
  - PCS capacity increased
- Passive decay heat removal
  - Passive RHR heat exchanger unchanged
  - System flow rate capacity increased
    - Increase inlet and outlet pipe size
- Passive safety injection
  - Major components unchanged
    - Accumulators / Core makeup tanks / IRWST unchanged
  - ADS capacity increased
    - Stages 1-3 unchanged; Stage 4 line sizes increased
  - Injection piping sizes sizes increased
    - IRWST injection; sump injection

AP1000 Containment Analysis

- Determine Required Containment Volume
  - Limiting events
    - Main steam line break
    - Loss of coolant accident
      - Margin to design pressure increased
  - Containment vessel design changes
    - Height increased 25'-6" (20% increase in volume)
    - Containment Design Pressure Increased to 59 psig
      - Thickness increased from 1.625" to 1.75"
        - 7.7% Increase in design pressure
      - ASME Code 1999 Addenda
        - 14% increase in allowable stress
      - ASME Code Case for SA738 Grade B material
        - 6% increase in allowable stress

Containment Vessel

AP600 AP1000

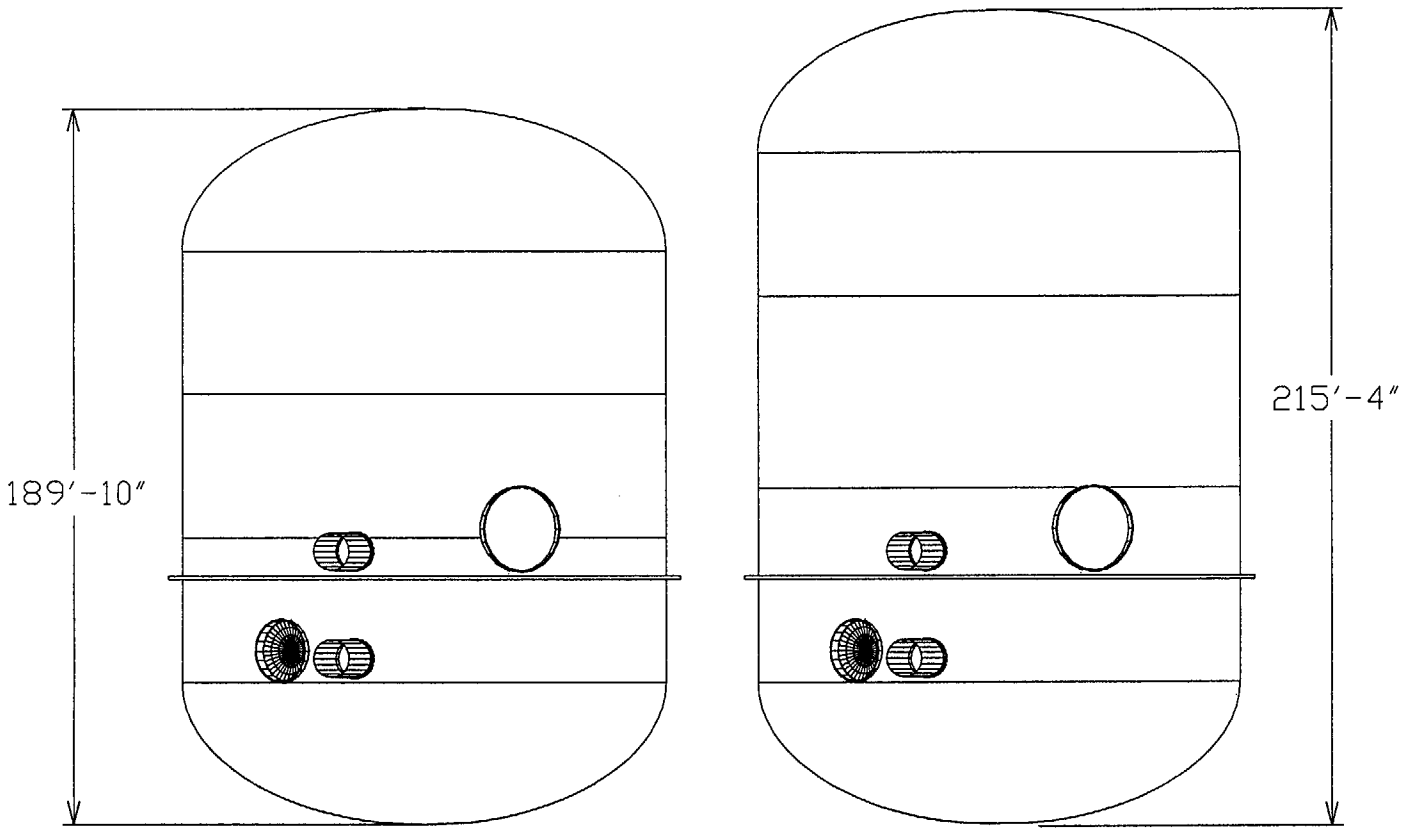

Parameter	AP600	AP1000
Shell Thickness	1 5/8"	1 ¾"
Total Free Volume, ft^3	1.7×10^6	2.037×10^6
Design Pressure, psig	45	59
Material	A537 Class 2	SA738 Grade B

Passive Decay Heat Removal

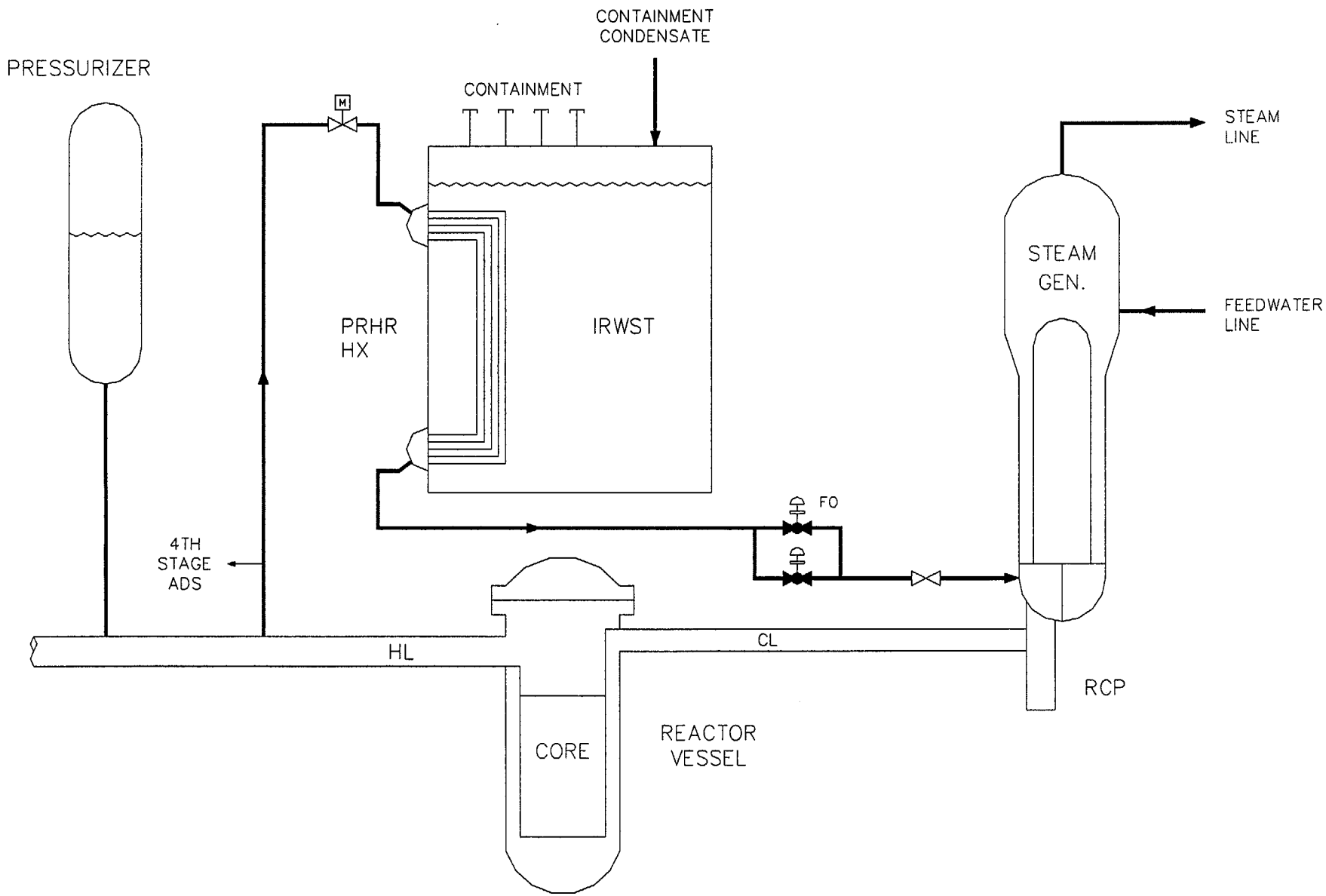

AP1000 Non-LOCA Analysis

- DNB Assessment
  - Loss of flow evaluations performed to determine required pump rotating inertia
  - Results indicate feasibility of proposed parameters

- Transient Analysis
  - Events analyzed to confirm passive RHR heat exchanger configuration
    - Loss of normal feedwater
    - Feedline break
  - Results indicate AP600 PRHR HX / IRWST configuration acceptable
    - Increase inlet and outlet pipe size to increase PRHR flow

Passive RHR Heat Exchanger

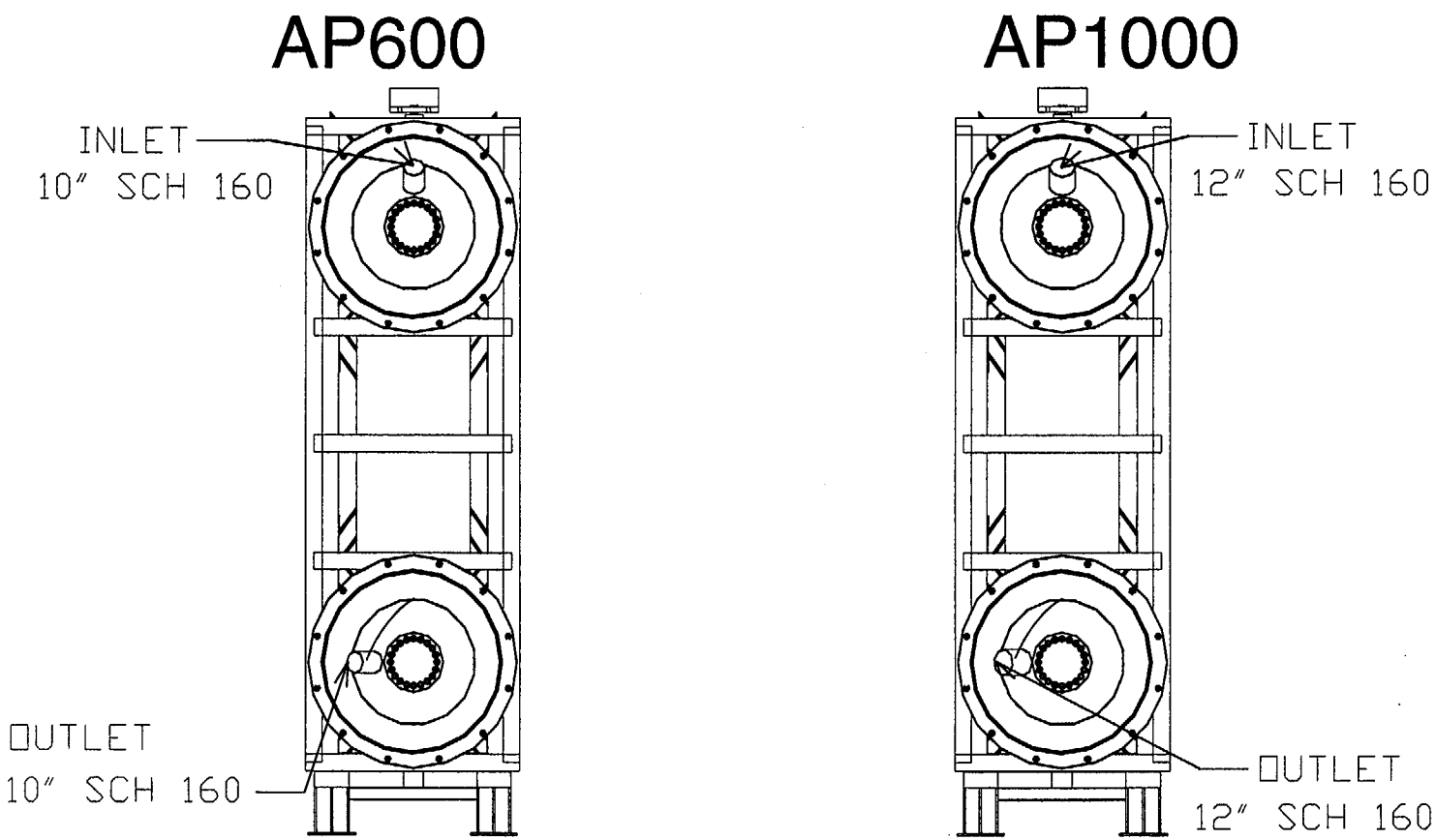

- PRHR HX design unchanged. Piping increased for higher flow rate

AP1000 Passive Safety Injection

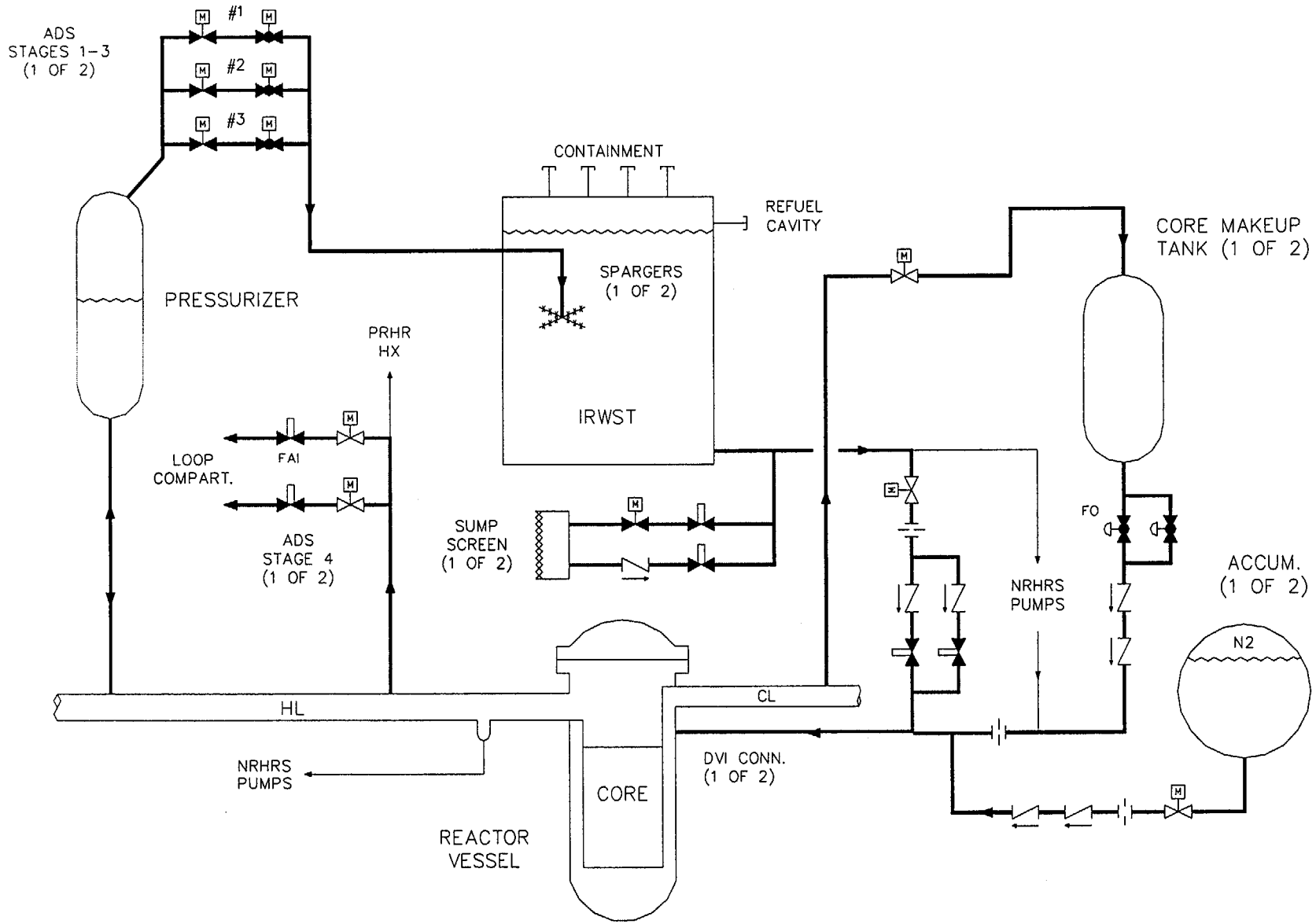

LOCA Analysis

- Large break LOCA assessment
  - Peak clad temperature << licensing limit
  - AP600 accumulator design maintained
  - Increase accumulator flow rate via change to flow orifice
  - AP600 core makeup tank design maintained

- Small break LOCA assessment
  - NOTRUMP analysis for AP1000
    - Assess ADS and IRWST injection capacity
  - COBRA-TRAC long-term cooling analysis
    - Assess ADS 4th Stage and containment recirculation capacity

Accumulators

AP600

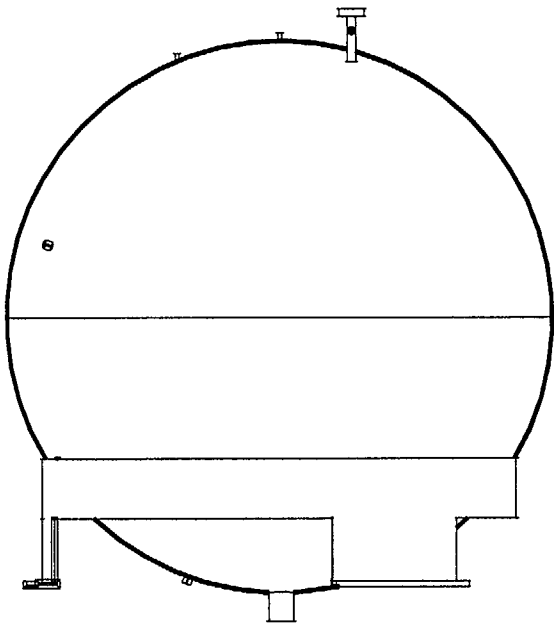

AP1000

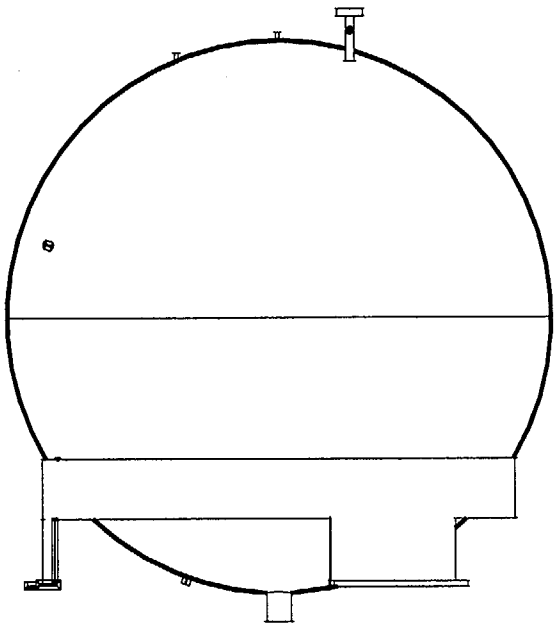

- Accumulator volume is 2000 ft^3 for both plant designs. AP1000 discharge line flow orifice resized to increase flow rate.

Core Makeup Tanks

AP600

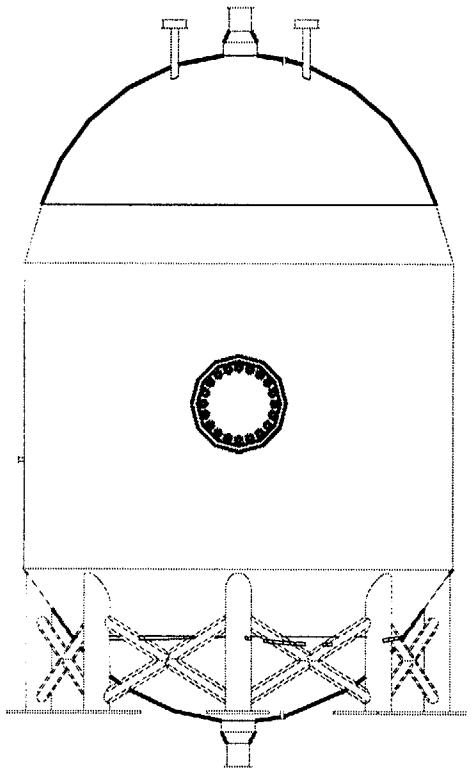

AP1000

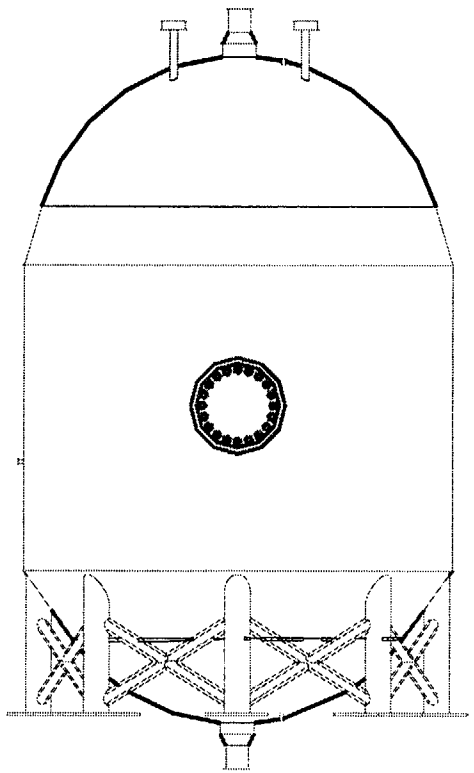

- Core Makeup Tank volume is 2000 ft^3 for both plant designs. No changes required.

Comparison of DVI Line

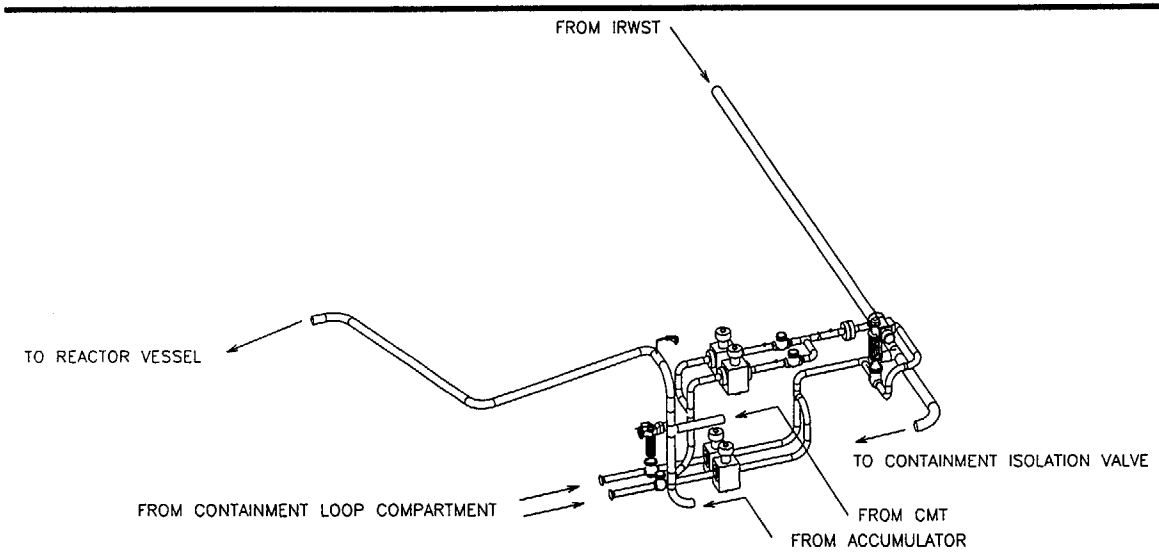

DVIB–AP600

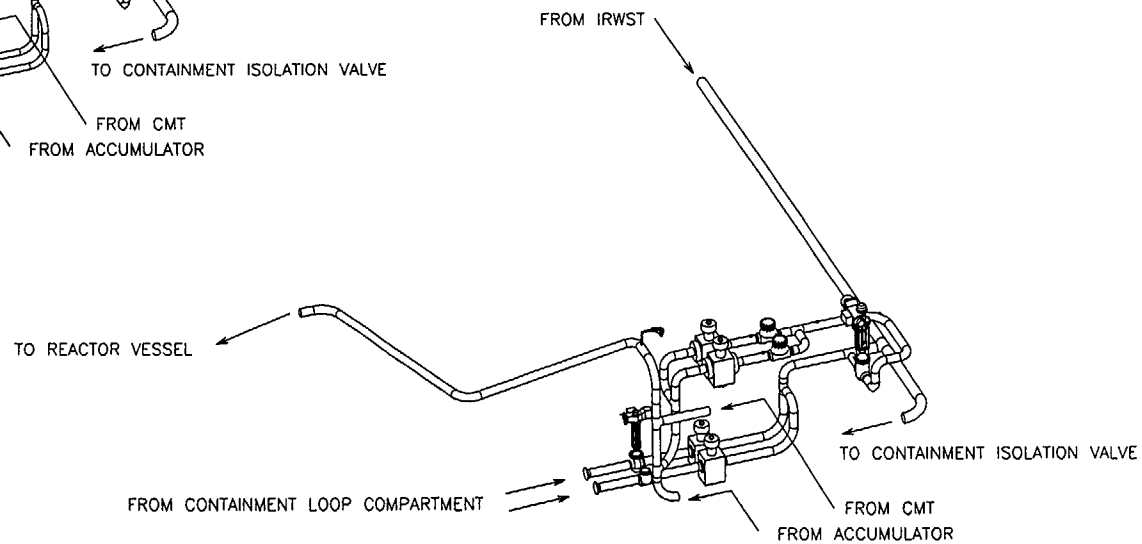

DVIB–AP1000

Comparison of 4th Stage ADS

ADS 4 STAGE – AP1000

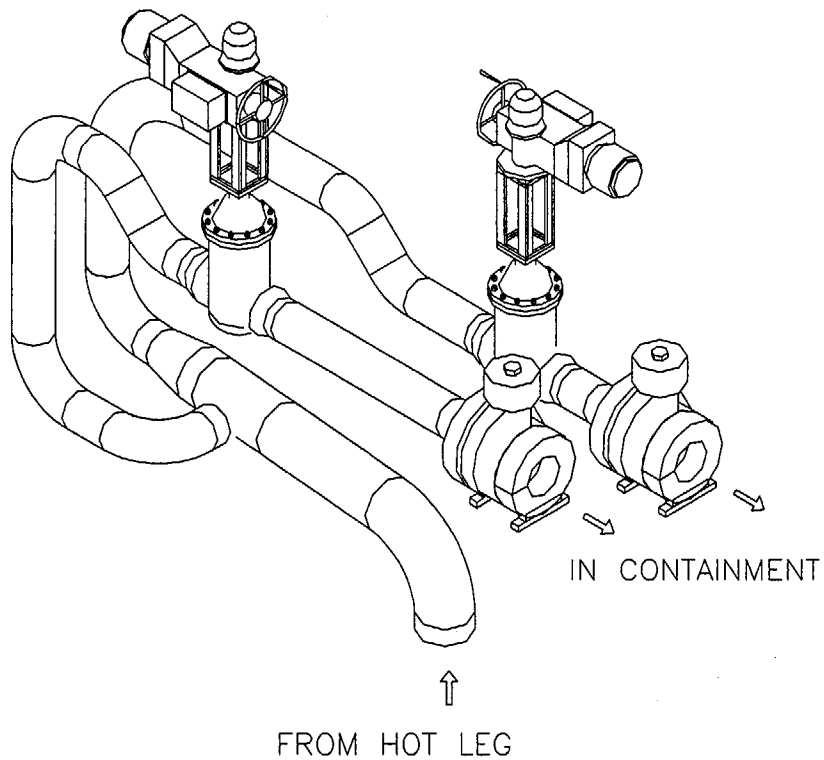

ADS 4 STAGE – AP600

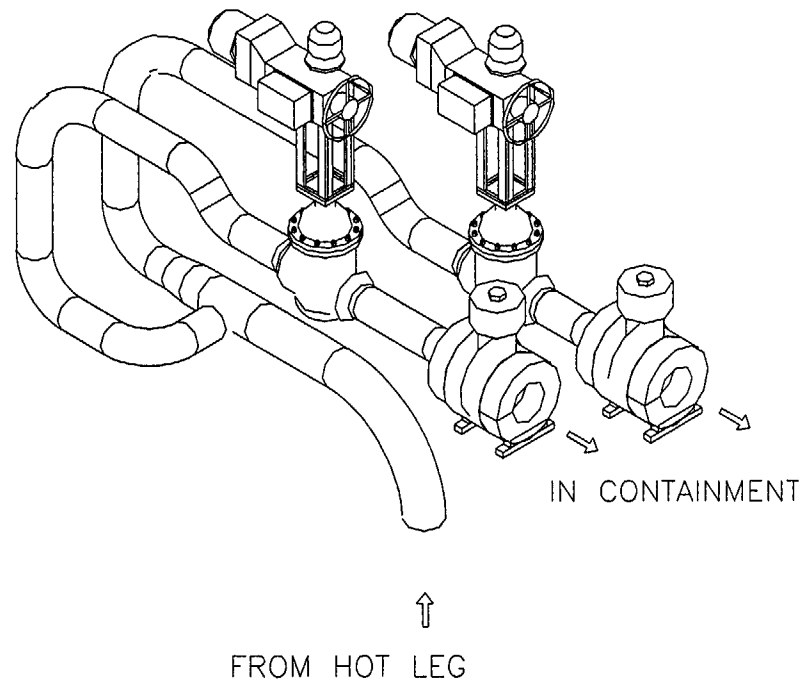

AP1000 Safety Margin

- Regulatory requirements ensure safety margin
  - AP1000 will meet all regulatory limits
- AP600 passive safety systems provide additional margin to regulatory limits
  - AP1000 passive safety systems will also provide additional margin
  - Margin management not always straight-forward
    - Competing effects - for example:
      - Higher SG secondary mass
        - Benefit to RCS overpressure protection
        - Penalty to containment design
    - AP1000 safety analysis will demonstrate acceptable margin

AP1000 Safety Margins

	Typical Plant	*AP600*	*AP1000*
Loss of Flow Margin to DNB Limit	~ 1 - 5%	15%	15%
Feedline Break Subcooling Margin	~30 °F	~150 °F	~100 °F
SG Tube Rupture	Operator actions required in 10 min.	Operator actions NOT required	Same as AP600
Small LOCA	3" Break Core uncovers PCT~1500 °F	≤ 8" Break No core uncovery	Same as AP600
Large LOCA (no uncertainties)	PCT ~ 2200°F	PCT ≤ 1400 °F	PCT ~ 1500 °F
Containment Pressurization Margin vs Design Pressure (LOCA)	~1.0 psi	HLB - 5.4 psi CLB - 1.6 psi	> AP600

AP1000 Balance of Plant

- Power Generation Systems
  - Main steam line size increased
    - Same size as ANO
  - Feedwater system capacity increased
  - Turbine Island component sizing
    - Heat balance completed
    - AP600 T/G configuration is retained
      - Changes to MSR, condenser, feedwater heaters
- NSSS Auxiliary Systems
  - Small impact to cooling water systems
    - Design configuration maintained
      - RNS / CCW / SFS / SWS / CVS

AP1000 General Arrangement

Plan at Elevation 145'-9"

AP600

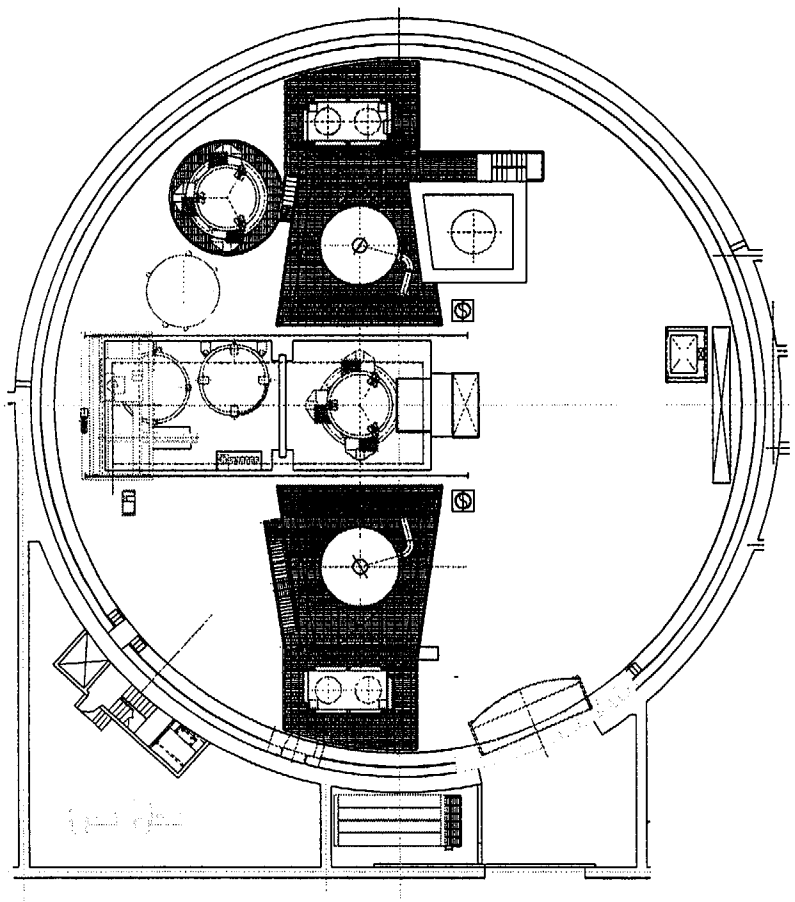

AP1000

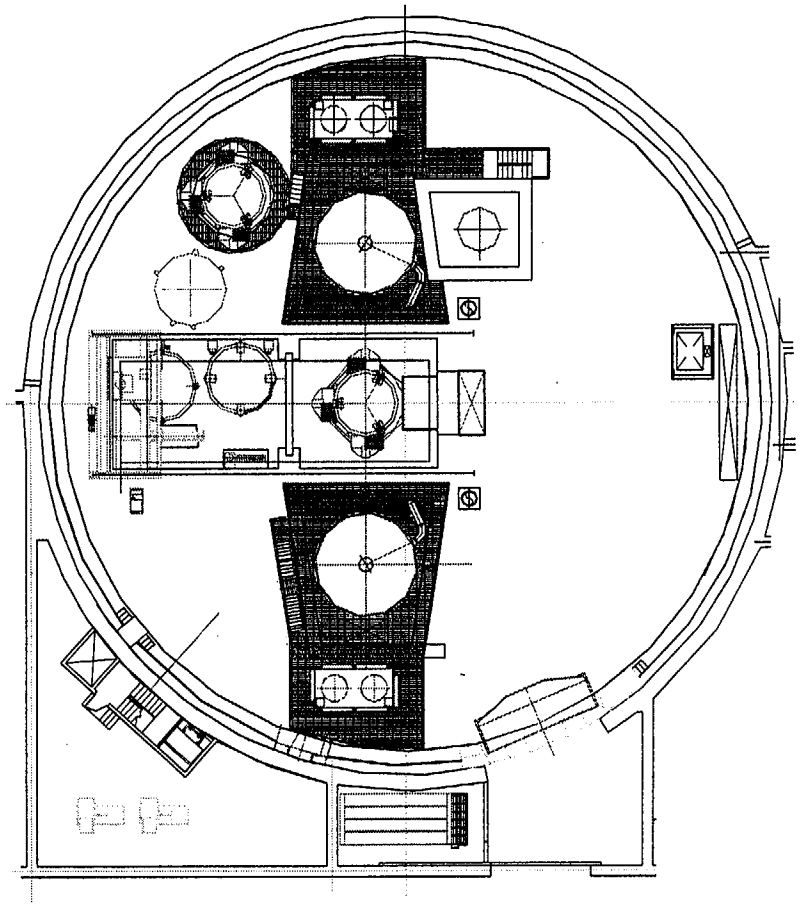

AP1000 General Arrangement

Plan at Elevation 135'

AP600

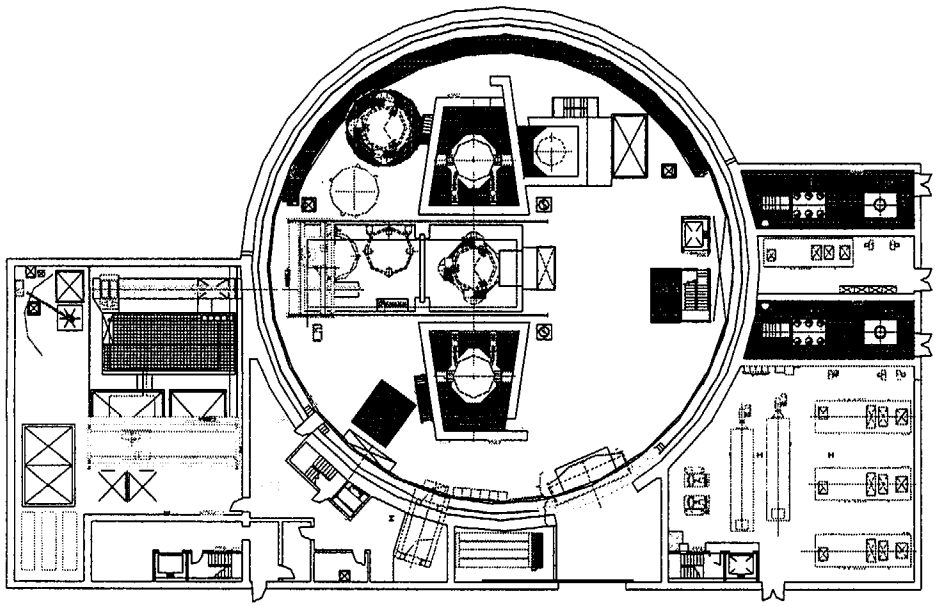

AP1000

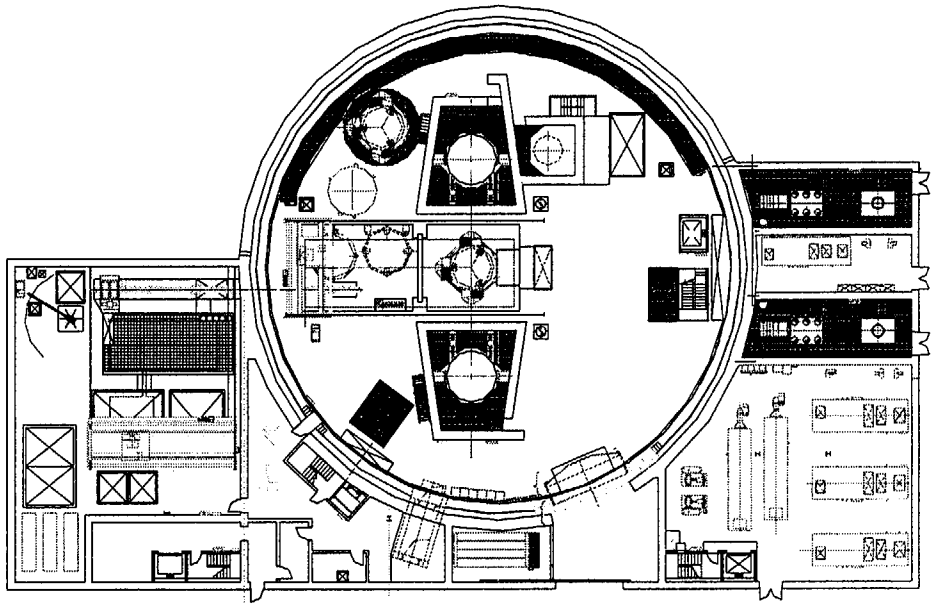

AP1000 General Arrangement

Containment Section View

AP600

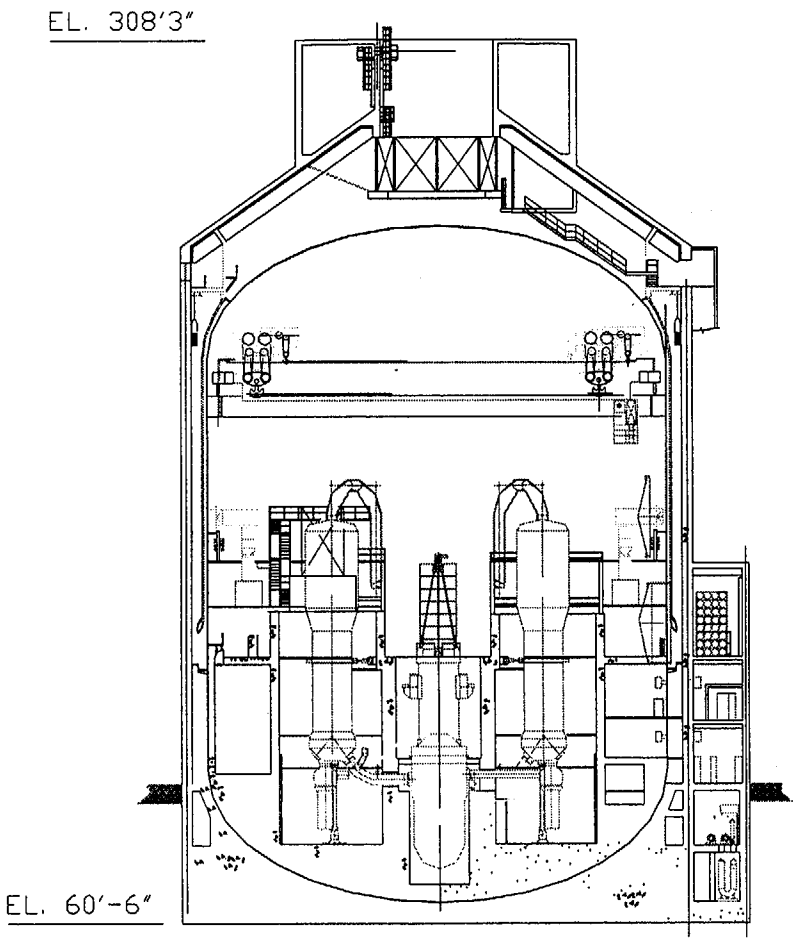

AP1000

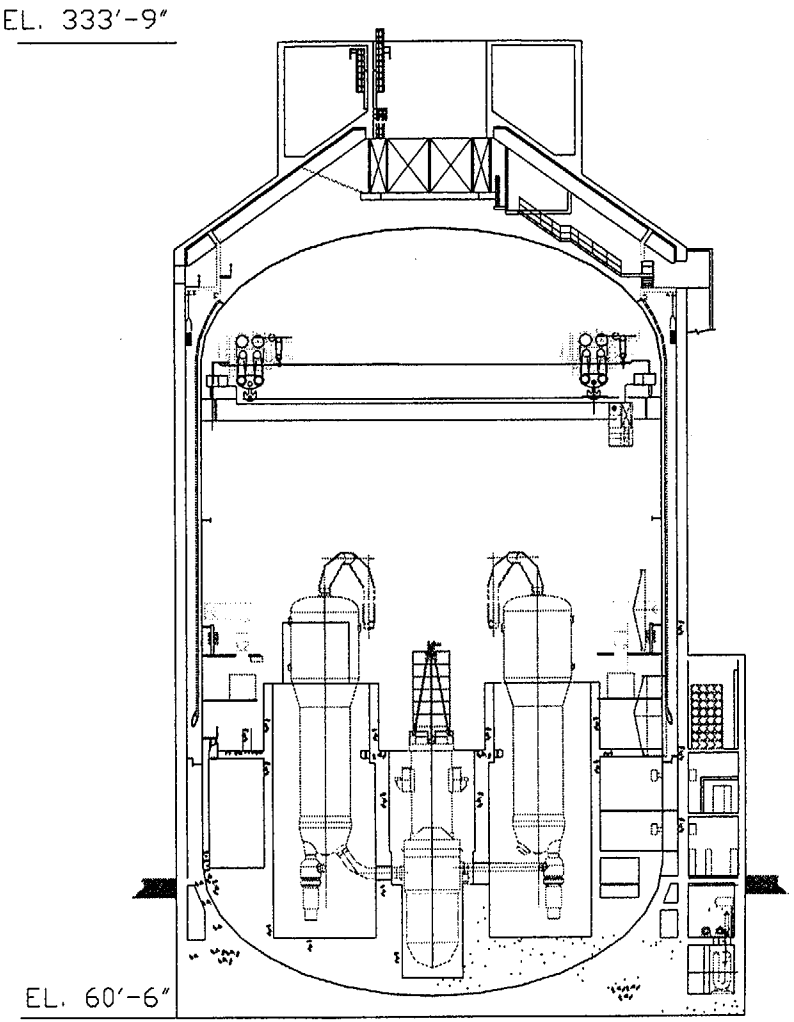

AP1000 - 3D Model

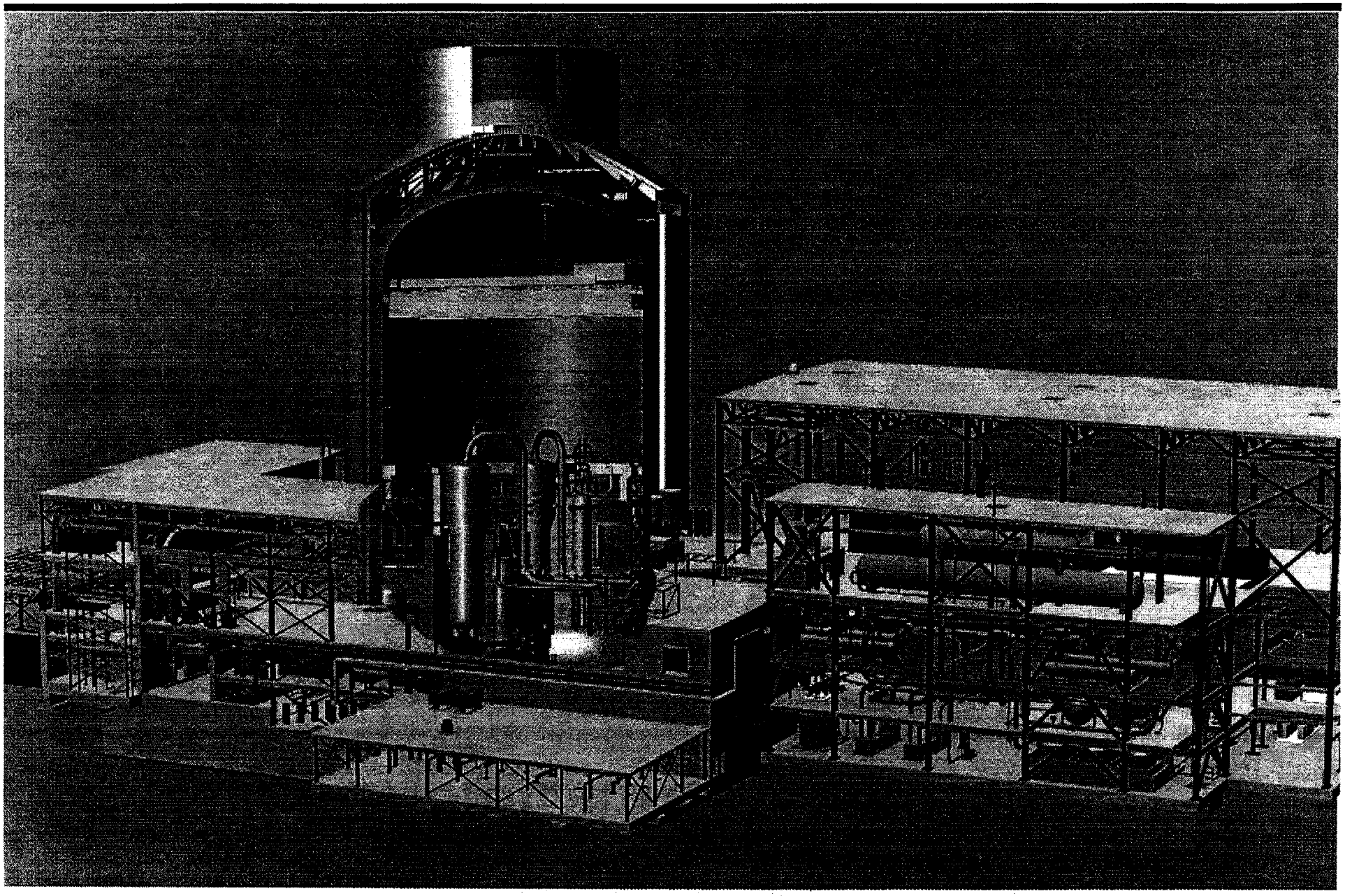

TIER 2 MASTER TABLE OF CONTENTS

Section	Title	Page
CHAPTER 1	INTRODUCTION AND GENERAL DESCRIPTION OF THE PLANT	1.1-1
1.1	Introduction	1.1-1
	AP600 to AP1000	
1.1.1	Plant Location	1.1-1
	AP600 to AP1000	
1.1.2	Containment Type	1.1-1
	No Change	
1.1.3	Reactor Type	1.1-1
	AP600 to AP1000	
1.1.4	Power Output	1.1-1
	Power rating revised	
1.1.5	Schedule	1.1-1
	AP600 to AP1000	
1.1.6	Format and Content	1.1-2
	AP600 to AP1000	
1.1.7	Combined License Information	1.1-3
	AP600 to AP1000	
1.2	General Plant Description	1.2-1
	AP600 to AP1000	
1.2.1	Design Criteria, Operating Characteristics, and Safety Considerations	1.2-1
	AP600 to AP1000	
	Power rating revised	
	Hot leg temperature increased	
	Reactor coolant system design description revised	
	Turbine Island design description revised	
1.2.2	Site Description	1.2-15
	AP600 to AP1000	
1.2.3	Plant Arrangement Description	1.2-16
	AP600 to AP1000	
	General arrangement drawings 1.2-9, 1.2-12, 1.2-13, 1.2-14, 1.2-15, 1.2-16	
1.2.4	Nuclear Island	1.2-16
	No Text Change	
	General arrangement drawings 1.2-9, 1.2-12, 1.2-13, 1.2-14, 1.2-15, 1.2-16	
1.2.5	Annex Building	1.2-25
	No Change	
1.2.6	Diesel Generator Building	1.2-25
	No Change	
1.2.7	Radwaste Building	1.2-26
	No Change	
1.2.8	Turbine Building	1.2-27
	No Text Change	

Enclosure 5

General arrangement drawing 1.2-27
1.2.9 Combined License Information 1.2-27
No Change
1.3 Comparisons with Similar Facility Designs 1.3-1
AP600 to AP1000
Plant description in table
1.4 Identification of Agents and Contractors 1.4-1
1.4.1 Applicant - Program Manager 1.4-1
AP600 to AP1000
1.4.2 Other Contractors and Participants 1.4-1
AP600 to AP1000
1.4.3 Combined License Information 1.4-3
No Changes
1.5 Requirements for Further Technical Information 1.5-1
AP600 to AP1000
1.5.1 AP600 Safety-Related Tests 1.5-1
AP600 to AP1000
1.5.2 AP600 Component Design Tests 1.5-7
AP600 to AP1000
1.5.3 Combined License Information 1.5-8
No Changes
1.5.4 References 1.5-8
No Change
1.6 Material Referenced 1.6-1
AP600 to AP1000
1.7 Drawings and Other Detailed Information 1.7-1
1.7.1 Electrical and Instrumentation and Control Drawings 1.7-1
No Changes
1.7.2 Piping and Instrumentation Diagrams 1.7-1
AP600 to AP1000
1.7.3 Combined License Information 1.7-1
No Changes
1.8 Interfaces for Standard Design 1.8-1
AP600 to AP1000
Table 1.8-2 COL items will change
1.9 Compliance with Regulatory Criteria 1.9-1
1.9.1 Regulatory Guides 1.9-1
AP600 to AP1000
1.9.2 Compliance With Standard Review Plan (NUREG-0800) 1.9-3
AP600 to AP1000
1.9.3 Three Mile Island Issues 1.9-3
AP600 to AP1000
1.9.4 Unresolved Safety Issues and Generic Safety Issues 1.9-28
AP600 to AP1000
1.9.5 Advanced Light Water Reactor Certification Issues 1.9-77

TIER 2 MASTER TABLE OF CONTENTS (Cont.)

Section	Title	Page
	AP600 to AP1000	
1.9.6	References	1.9-110
	No Changes	
APPENDIX 1A	CONFORMANCE WITH REGULATORY GUIDES	1A-1
	AP600 to AP1000	
1A.1	References	1A-80
	No Changes	
APPENDIX 1B	SEVERE ACCIDENT MITIGATION DESIGN ALTERNATIVES	1B-1
	AP600 to AP1000	
CHAPTER 2	SITE CHARACTERISTICS	2-1
	AP600 to AP1000	
2.1	Geography and Demography	2-1
	No Change	
2.1.1	Combined License Information for Geography and Demography	2-1
	AP600 to AP1000	
2.2	Nearby Industrial, Transportation, and Military Facilities	2-1
	AP600 to AP1000	
2.2.1	Combined License Information for Identification of Site-specific Potential Hazards	2-2
	AP600 to AP1000	
2.3	Meteorology	2-2
	AP600 to AP1000	
2.3.1	Regional Climatology	2-3
	No Change	
2.3.2	Local Meteorology	2-3
	No Change	
2.3.3	Onsite Meteorological Measurement Programs	2-3
	No Change	
2.3.4	Short-Term Diffusion Estimates	2-3
	AP600 to AP1000	
	Chi/Q values in Table 2-1	
2.3.5	Long-Term Diffusion Estimates	2-3
	No Change	
2.3.6	Combined Licensed Information	2-4
	AP600 to AP1000	
2.4	Hydrologic Engineering	2-4
	AP600 to AP1000	
2.4.1	Combined License Information	2-5

TIER 2 MASTER TABLE OF CONTENTS (Cont.)

Section	Title	Page
	AP600 to AP1000	
2.5	Geology, Seismology, and Geotechnical Engineering	2-6
	AP600 to AP1000	
2.5.1	Basic Geological and Seismic Combined License Information	2-6
	AP600 to AP1000	
2.5.2	Vibratory Ground Motion	2-7
	AP600 to AP1000	
2.5.3	Surface Faulting Combined License Information	2-8
	AP600 to AP1000	
2.5.4	Stability and Uniformity of Subsurface Materials and Foundations	2-9
	Generic site information deleted	
	Site specific information will be provided by COL applicant	
2.5.5	Combined License Information for Stability of Slopes	2-19
	AP600 to AP1000	
2.5.6	Combined License Information for Embankments and Dams	2-19
	AP600 to AP1000	
2.5.7	References	2-19
	No Change	
APPENDIX 2A	DESIGN SOIL PROFILES	2A-1
	Appendix 2A deleted	
	Site specific information will be provided by COL applicant	
APPENDIX 2B	PARAMETRIC STUDIES RELATED TO AP600 DESIGN SOIL PROFILES	2B-1
	Appendix 2B deleted	
	Site specific information will be provided by COL applicant	
APPENDIX 2C	SEISMIC LATERAL EARTH PRESSURES	2C-1
	Appendix 2C will be deleted	
	Incorporate acceptance criteria in Section 3.8	
	Site specific information will be provided by COL applicant	
CHAPTER 3	DESIGN OF STRUCTURES, COMPONENTS, EQUIPMENT AND SYSTEMS	3.1-1
3.1	Conformance With Nuclear Regulatory Commission General Design Criteria	3.1-1
	AP600 to AP1000	
3.1.1	Overall Requirements	3.1-1
	AP600 to AP1000	
3.1.2	Protection by Multiple Fission Product Barriers	3.1-5

TIER 2 MASTER TABLE OF CONTENTS (Cont.)

Section	Title	Page
	AP600 to AP1000	
	3.1.3 Protection and Reactivity Control Systems	3.1-12
	AP600 to AP1000	
	3.1.4 Fluid Systems	3.1-18
	AP600 to AP1000	
	3.1.5 Reactor Containment	3.1-30
	AP600 to AP1000	
	3.1.6 Fuel and Reactivity Control	3.1-34
	AP600 to AP1000	
	3.1.7 Combined License Information	3.1-37
	No Change	
	3.1.8 References	3.1-37
	No Change	
3.2	Classification of Structures, Components, and Systems	3.2-1
	3.2.1 Seismic Classification	3.2-1
	AP600 to AP1000	
	3.2.2 AP600 Classification System	3.2-3
	AP600 to AP1000	
	3.2.3 Inspection Requirements	3.2-13
	No Change	
	3.2.4 Application of AP600 Safety-Related Equipment and Seismic Classification System	3.2-13
	No text change	
	RCP Control added to Table 3.2-3	
	3.2.5 Combined License Information	3.2-17
	No Change	
	3.2.6 References	3.2-17
	No Change	
3.3	Wind and Tornado Loadings	3.3-1
	3.3.1 Wind Loadings	3.3-1
	AP600 to AP1000	
	3.3.2 Tornado Loadings	3.3-2
	AP600 to AP1000	
	3.3.3 Combined License Information	3.3-4
	AP600 to AP1000	
	3.3.4 References	3.3-4
	No Change	
3.4	Water Level (Flood) Design	3.4-1
	AP600 to AP1000	
	3.4.1 Flood Protection	3.4-1

TIER 2 MASTER TABLE OF CONTENTS (Cont.)

Section	Title	Page
	AP600 to AP1000	
	3.4.2 Analytical and Test Procedures	3.4-24
	AP600 to AP1000	
	3.4.3 Combined License Information	3.4-24
	No Change	
	3.4.4 References	3.4-24
	No Change	
3.5	Missile Protection	3.5-1
	No Change	
	3.5.1 Missile Selection and Description	3.5-4
	No Change	
	3.5.2 Protection from Externally Generated Missiles	3.5-13
	No Change	
	3.5.3 Barrier Design Procedures	3.5-13
	No Change	
	3.5.4 Combined License Information	3.5-17
	No Change	
	3.5.5 References	3.5-17
	No Change	
3.6	Protection Against the Dynamic Effects Associated with the Postulated Rupture of Piping	3.6-1
	AP600 to AP1000	
	3.6.1 Postulated Piping Failures in Fluid Systems Inside and Outside Containment	3.6-2
	AP600 to AP1000	
	3.6.2 Determination of Break Locations and Dynamic Effects Associated with the Postulated Rupture of Piping	3.6-12
	AP600 to AP1000	
	Text revised to include new line sizes	
	Table 3.6-2 and 3.6-3 revised include new line sizes	
	3.6.3 Leak-before-Break Evaluation Procedures	3.6-31
	AP600 to AP1000	
	3.6.4 Combined License Information	3.6-37
	AP600 to AP1000	
	3.6.5 References	3.6-38
	No Change	
3.7	Seismic Design	3.7-1
	AP600 to AP1000	
	3.7.1 Seismic Input	3.7-1
	AP600 to AP1000	
	Design soil cases replaced by COL information item	
	3.7.2 Seismic System Analysis	3.7-7

TIER 2 MASTER TABLE OF CONTENTS (Cont.)

Section		Title	Page
		AP600 to AP1000	
		Descriptions of models will be provided by COL applicant	
		Results of analyses will be provided by COL applicant	
		Tables 3.7.2-1 through 3.7.2-23 revised or deleted	
		Figures 3.7.2-4 through 3.7.2-7 and 3.7.2-9 through 3.7.2-11 revised or deleted	
		Figure 3.7.2-12, Sheets 3-11, 15-17, 20 revised	
	3.7.3	Seismic Subsystem Analysis	3.7-24
		AP600 to AP1000	
	3.7.4	Seismic Instrumentation	3.7-50
		AP600 to AP1000	
		Elevation of one seismic sensor changes	
	3.7.5	Combined License Information	3.7-52
		AP600 to AP1000	
		New COL items added	
	3.7.6	References	3.7-53
		No Change	
3.8	Design of Category I Structures		3.8-1
	3.8.1	Concrete Containment	3.8-1
		No Change	
	3.8.2	Steel Containment	3.8-1
		AP600 to AP1000	
		Design revised to reference ASME 99 Addenda	
		Figures 3.8.2-1, 2, 4, 5, 6 revised	
		Results of detailed analysis will be provided by COL applicant	
	3.8.3	Concrete and Steel Internal Structures of Steel Containment	3.8-18
		AP600 to AP1000	
		IRWST heatup rates will be revised	
		Steam Generator support system revised	
		Critical section design descriptions will be provided by COL applicant	
		Table 3.8.3-2 results will be provided by COL applicant	
		Tables 3.8.3-4 through 3.8.3-7 results will be provided by COL applicant	
		Figures 3.8.3-1, 5, 6 revised - arrangements	
	3.8.4	Other Category I Structures	3.8-41
		AP600 to AP1000	
		Critical section design descriptions will be provided by COL applicant	
		Table 3.8.4-7 results will be provided by COL applicant	
		Figures 3.8.4-1, 7, 9 revised - arrangements	
	3.8.5	Foundations	3.8-58
		AP600 to AP1000	
		Table 3.8.5-2, 3 results will be provided by COL applicant	
		Figure 3.8.5-3 results will be provided by COL applicant	
	3.8.6	Combined License Information	3.8-71

TIER 2 MASTER TABLE OF CONTENTS (Cont.)

Section	Title	Page
	New COL information items will be added	
3.8.7	References	3.8-71
	No Change	
3.9	Mechanical Systems and Components	3.9-1
3.9.1	Special Topics for Mechanical Components	3.9-1
	AP600 to AP1000	
	Transient descriptions will be confirmed	
3.9.2	Dynamic Testing and Analysis	3.9-30
	AP600 to AP1000	
	Description of reactor internals and testing revised	
	Figure 3.9-5 revised to address longer reactor vessel	
3.9.3	ASME Code Classes 1, 2, and 3 Components, Component Supports, and Core Support Structures	3.9-45
	AP600 to AP1000	
3.9.4	Control Rod Drive System (CRDS)	3.9-72
	AP600 to AP1000	
3.9.5	Reactor Pressure Vessel Internals	3.9-82
	AP600 to AP1000	
	Figure 3.9-5 revised to address longer reactor vessel	
3.9.6	Inservice Testing of Pumps and Valves	3.9-88
	AP600 to AP1000	
3.9.7	Integrated Head Package	3.9-96
	AP600 to AP1000	
3.9.8	Combined License Information	3.9-101
	AP600 to AP1000	
3.9.9	References	3.9-102
	No Change	
3.10	Seismic and Dynamic Qualification of Seismic Category I Mechanical and Electrical Equipment	3.10-1
	No Change	
3.10.1	Seismic and Dynamic Qualification Criteria	3.10-2
	AP600 to AP1000	
3.10.2	Methods and Procedures for Qualifying Electrical Equipment, Instrumentation, and Mechanical Components	3.10-3
	AP600 to AP1000	
3.10.3	Method and Procedures for Qualifying Supports of Electrical Equipment, Instrumentation, and Mechanical Components	3.10-7
	No Change	
3.10.4	Documentation	3.10-7

TIER 2 MASTER TABLE OF CONTENTS (Cont.)

Section	Title	Page
	No Change	
	3.10.5 Standard Review Plan Evaluation	3.10-8
	No Change	
	3.10.6 Combined License Information Item on Experienced-Based Qualification	3.10-8
	No Change	
	3.10.7 References	3.10-8
	No Change	
3.11	Environmental Qualification of Mechanical and Electrical Equipment	3.11-1
	3.11.1 Equipment Identification and Environmental Conditions	3.11-1
	No Change	
	3.11.2 Qualification Tests and Analysis	3.11-3
	AP600 to AP1000	
	3.11.3 Loss of Ventilation	3.11-5
	No Change	
	3.11.4 Estimated Radiation and Chemical Environment	3.11-5
	No Change	
	3.11.5 Combined License Information Item for Equipment Qualification File	3.11-6
	No Change	
	3.11.6 References	3.11-6
	No Change	
APPENDIX 3A	HVAC DUCTS AND DUCT SUPPORTS	3A-1
	No Change	
3A.1	Codes and Standards	3A-1
	No Change	
3A.2	Loads and Load Combinations	3A-1
	No Change	
3A.3	Analysis and Design	3A-3
	No Change	
APPENDIX 3B	LEAK-BEFORE-BREAK EVALUATION OF THE AP600 PIPING	3B-1
	AP600 to AP1000	
3B.1	Leak-Before-Break Criteria for AP600 Piping	3B-2
	AP600 to AP1000	
3B.2	Potential Failure Mechanisms for AP600 Piping	3B-2
	AP600 to AP1000	
3B.3	Leak-Before-Break Bounding Analysis	3B-10
	AP600 to AP1000	
	Figures 3B-2 through 3B-9 revised to address line diameter and temperature changes	

TIER 2 MASTER TABLE OF CONTENTS (Cont.)

Section	Title	Page
3B.4	Differences in Leak-Before-Break Analysis for Stainless Steel and Ferritic Steel Pipe	3B-18
	No Change	
3B.5	Differences in Inspection Criteria for Class 1, 2, and 3 Systems	3B-18
	No Change	
3B.6	Differences in Fabrication Requirements of ASME Class 1, Class 2, and Class 3 Piping	3B-18
	No Change	
3B.7	Sensitivity Study for the Constraint Effect on LBB	3B-18
	AP600 to AP1000	
3B.8	References	3B-19
	No Change	
APPENDIX 3C	REACTOR COOLANT LOOP ANALYSIS METHODS	3C-1
	AP600 to AP1000	
3C.1	Reactor Coolant Loop Model Description	3C-1
	AP600 to AP1000	
3C.2	Design Requirements	3C-3
	No Change	
3C.3	Static Analyses	3C-4
	No Change	
3C.4	Seismic Analyses	3C-4
	No Change	
3C.5	Reactor Coolant Loop Piping Stresses	3C-5
	No Change	
3C.6	Description of Computer Programs	3C-5
	AP600 to AP1000	
APPENDIX 3D	METHODOLOGY FOR QUALIFYING AP600 SAFETY-RELATED ELECTRICAL AND MECHANICAL EQUIPMENT	3D-1
	AP600 to AP1000	
3D.1	Purpose	3D-2
	No Change	
3D.2	Scope	3D-2
	AP600 to AP1000	
3D.3	Introduction	3D-3
	AP600 to AP1000	
3D.4	Qualification Criteria	3D-3

TIER 2 MASTER TABLE OF CONTENTS (Cont.)

Section	Title	Page
	AP600 to AP1000	
	3D.4.1 Qualification Guides	3D-3
	AP600 to AP1000	
	3D.4.2 Definitions	3D-7
	No Change	
	3D.4.3 Mild versus Harsh Environments	3D-7
	AP600 to AP1000	
	3D.4.4 Test Sequence	3D-8
	No Change	
	3D.4.5 Aging	3D-9
	AP600 to AP1000	
	3D.4.6 Operability Time	3D-12
	No Change	
	3D.4.7 Performance Criterion	3D-12
	No Change	
	3D.4.8 Margin	3D-12
	AP600 to AP1000	
	3D.4.9 Treatment of Failures	3D-15
	No Change	
	3D.4.10 Traceability	3D-16
	No Change	
3D.5	Design Specifications	3D-17
	AP600 to AP1000	
	3D.5.1 Normal Operating Conditions	3D-17
	AP600 to AP1000	
	Core power changes	
	Table 3D.5-2 changes to reflect higher power	
	3D.5.2 Abnormal Operating Conditions	3D-18
	AP600 to AP1000	
	3D.5.3 Seismic Events	3D-20
	No Change	
	3D.5.4 Containment Test Environment	3D-20
	AP600 to AP1000	
	3D.5.5 Design Basis Event Conditions	3D-20
	AP600 to AP1000	
	Power level increases	
	New dose calculations performed	
	Figures 3D5-2 through 3D5-5 change	
	Accident environment changes – Figures 3D5-6 and 3D5-7	
3D.6	Qualification Methods	3D-24

TIER 2 MASTER TABLE OF CONTENTS (Cont.)

Section	Title	Page
	AP600 to AP1000	
3D.6.1	Type Test	3D-24
	AP600 to AP1000	
3D.6.2	Analysis	3D-25
	AP600 to AP1000	
3D.6.3	Operating Experience	3D-29
	AP600 to AP1000	
3D.6.4	On-Going Qualification	3D-29
	AP600 to AP1000	
3D.6.5	Combinations of Methods	3D-30
	AP600 to AP1000	
3D.7	Documentation	3D-31
	AP600 to AP1000	
3D.7.1	Equipment Qualification Data Package	3D-31
	No Change	
3D.7.2	Specifications	3D-32
	AP600 to AP1000	
3D.7.3	Qualification Program	3D-34
	No Change	
3D.7.4	Qualification by Test	3D-34
	No Change	
3D.7.5	Qualification by Analysis	3D-37
	No Change	
3D.7.6	Qualification by Experience	3D-37
	No Change	
3D.7.7	Qualification Program Conclusions	3D-37
	No Change	
3D.7.8	Combined License Information	3D-37
	No Change	
3D.8	References	3D-37
	No Change	
Appendix 3D-Attachment A - Sample Equipment Qualification Data Package		3D-69
Appendix 3D-Attachment B - Aging Evaluation Program		3D-87
B.1	Introduction	3D-87
	AP600 to AP1000	
B.2	Objectives	3D-87
	No Change	
B.3	Basic Approach	3D-87

TIER 2 MASTER TABLE OF CONTENTS (Cont.)

Section	Title	Page
	No Change	
B.4	Subprogram A	3D-88
	No Change	
B.4.1	Scope	3D-88
	No Change	
B.4.2	Aging Mechanisms	3D-88
	No Change	
B.4.3	Time	3D-88
	No Change	
B.4.4	Operational Stresses	3D-89
	No Change	
B.4.5	External Stresses	3D-89
	No Change	
B.4.6	Synergism	3D-91
	No Change	
B.4.7	Design Basis Event Testing	3D-91
	No Change	
B.4.8	Aging Sequence	3D-91
	No Change	
B.4.9	Performance Criterion	3D-91
	No Change	
B.4.10	Failure Treatment	3D-91
	No Change	
B.5	Subprogram B	3D-92
	No Change	
B.5.1	Scope	3D-93
	No Change	
B.5.2	Performance Criteria	3D-93
	No Change	
B.5.3	Failure Treatment	3D-93
	No Change	
Appendix 3D-Attachment C - Effects of Gamma Radiation Doses Below 10^4 Rads on the Mechanical Properties of Materials		3D-96
C.1	Introduction	3D-96
	No Change	
C.2	Scope 3D-97	
	No Change	
C.3	Discussion	3D-97
	No Change	
C.4	Conclusions	3D-98

TIER 2 MASTER TABLE OF CONTENTS (Cont.)

Section	Title	Page
	No Change	
C.5	References	3D-98
	No Change	
Appendix 3D-Attachment D - Accelerated Thermal Aging Parameters		3D-103
D.1	Introduction	3D-103
	AP600 to AP1000	
D.2	Arrhenius Model	3D-103
	AP600 to AP1000	
D.3	Activation Energy	3D-105
	No Change	
D.4	Thermal Aging (Normal/Abnormal Operating Conditions)	3D-106
	AP600 to AP1000	
	D.4.1 Normal Operation Temperature	3D-106
	No Change	
	D.4.2 Accelerated Aging Temperature	3D-107
	No Change	
	D.4.3 Examples of Arrhenius Calculations	3D-107
	No Change	
D.5	Post-Accident Thermal Aging	3D-108
	No Change	
	D.5.1 Post-Accident Operating Temperatures	3D-108
	No Change	
	D.5.2 Accelerated Thermal Aging Parameters for Post-Accident Conditions	3D-109
	No Change	
D.6	References	3D-109
	No Change	
Appendix 3D-Attachment E - Seismic Qualification Techniques		3D-115
	AP600 to AP1000	
E.1	Purpose	3D-115
	No Change	
E.2	Definitions	3D-115
	E.2.1 1/2 Safe Shutdown Earthquake	3D-115
	No Change	
	E.2.2 Seismic Category I Equipment	3D-115
	No Change	
	E.2.3 Active Equipment	3D-115
	No Change	
	E.2.4 Passive Equipment	3D-115

TIER 2 MASTER TABLE OF CONTENTS (Cont.)

Section	Title	Page
	No Change	
E.3	Qualification Methods	3D-116
	No Change	
	E.3.1 Use of Qualification by Testing	3D-116
	No Change	
	E.3.2 Use of Qualification by Analysis	3D-116
	No Change	
E.4	Requirements	3D-117
	No Change	
	E.4.1 Damping	3D-117
	No Change	
	E.4.2 Interface Requirements	3D-117
	No Change	
	E.4.3 Mounting Simulation	3D-118
	AP600 to AP1000	
	E.4.4 1/2 Safe Shutdown Earthquake	3D-118
	AP600 to AP1000	
	E.4.5 Safe Shutdown Earthquake	3D-118
	No Change	
	E.4.6 Other Dynamic Loads	3D-118
	No Change	
E.5	Qualification by Test	3D-118
	No Change	
	E.5.1 Qualification of Hard-Mounted Equipment	3D-119
	No Change	
	E.5.2 Qualification of Line-Mounted Equipment	3D-120
	No Change	
	E.5.3 Operational Conditions	3D-122
	No Change	
	E.5.4 Resonant Search Testing	3D-123
	No Change	
E.6	Qualification by Analysis	3D-123
	No Change	
	E.6.1 Modeling	3D-124
	No Change	
	E.6.2 Qualification by Static Analysis	3D-124
	No Change	
	E.6.3 Qualification by Dynamic Analysis	3D-124
	No Change	
E.7	Performance Criteria	3D-126

TIER 2 MASTER TABLE OF CONTENTS (Cont.)

Section	Title	Page
	No Change	
	E.7.1 Equipment Qualification by Test	3D-126
	No Change	
	E.7.2 Equipment Qualification by Analysis	3D-126
	No Change	
APPENDIX 3E	HIGH-ENERGY PIPING IN THE NUCLEAR ISLAND	3E-1
	AP600 to AP1000	
	Figure 3E-1and 3E-4 Line diameters change	
APPENDIX 3F	CABLE TRAYS AND CABLE TRAY SUPPORTS	3F-1
	No Change	
3F.1	Codes and Standards	3F-1
	No Change	
3F.2	Loads and Load Combinations	3F-1
	No Change	
	3F.2.1 Loads	3F-1
	No Change	
	3F.2.2 Load Combinations	3F-2
	No Change	
3F.3	Analysis and Design	3F-2
	3F.3.1 Damping	3F-2
	AP600 to AP1000	
	3F.3.2 Seismic Analysis	3F-3
	No Change	
	3F.3.3 Allowable Stresses	3F-3
	No Change	
	3F.3.4 Connections	3F-3
	No Change	
APPENDIX 3G	CRITERIA FOR BUCKLING EVALUATION OF CONTAINMENT VESSEL	3G-1
	No Change	
3G.1	Notation	3G-1
	No Change	
3G.2	Factors of Safety	3G-2
	No Change	
3G.3	Capacity Reduction Factors	3G-2
	No Change	
	3G.3.1 Cylindrical Shells	3G-2

TIER 2 MASTER TABLE OF CONTENTS (Cont.)

Section	Title	Page
	No Change	
	3G.3.2 Spherical Shells	3G-3
	No Change	
	3G.3.3 Ellipsoidal Shells	3G-3
	No Change	
3G.4	Plasticity Reduction Factor	3G-4
	No Change	
	3G.4.1 Plasticity Reduction Factors	3G-4
	No Change	
	3G.4.2 Spherical Shells	3G-4
	No Change	
	3G.4.3 Ellipsoidal Shells	3G-5
	No Change	
3G.5	Theoretical Buckling Values	3G-5
	No Change	
	3G.5.1 Cylindrical Shells	3G-5
	No Change	
	3G.5.2 Spherical Shell	3G-6
	No Change	
	3G.5.3 Ellipsoidal Shells	3G-6
	No Change	
3G.6	Interaction Equations for Local Buckling	3G-6
	No Change	
	3G.6.1 Elastic Buckling	3G-6
	No Change	
	3G.6.2 Inelastic	3G-9
	No Change	
APPENDIX 3H	AUXILIARY BUILDING CRITICAL SECTIONS	
	Appendix 3H will be provided by the COL applicant	
CHAPTER 4	REACTOR	4.1-1
4.1	Summary Description	4.1-1
	AP600 to AP1000	
	Table 4.1-1 revised to reflect higher power, more and longer fuel assemblies	
	4.1.1 Principal Design Requirements	4.1-4
	Core average linear power increased	
	4.1.2 Combined License Information	4.1-5
	No Change	
	4.1.3 References	4.1-5
	No Change	

TIER 2 MASTER TABLE OF CONTENTS (Cont.)

Section	Title	Page
4.2	Fuel System Design	4.2-1
4.2.1	Design Basis	4.2-2
	AP600 to AP1000	
4.2.2	Description and Design Drawings	4.2-9
	AP600 to AP1000	
	Figures & Tables reflect more and longer fuel assemblies	
4.2.3	Design Evaluation	4.2-20
	AP600 to AP1000	
4.2.4	Testing and Inspection Plan	4.2-32
	AP600 to AP1000	
4.2.5	Combined License Information	4.2-37
	AP600 to AP1000	
4.2.6	References	4.2-37
	No Change	
4.3	Nuclear Design	4.3-1
4.3.1	Design Basis	4.3-1
	No Change	
4.3.2	Description	4.3-7
	AP600 to AP1000	
	Figures & Tables reflect more and longer fuel assemblies	
	Figures & Tables reflect higher power	
4.3.3	Analytical Methods	4.3-38
	No Change	
4.3.4	Combined License Information	4.3-42
	AP600 to AP1000	
4.3.5	References	4.3-43
	No Change	
4.4	Thermal and Hydraulic Design	4.4-1
4.4.1	Design Basis	4.4-1
	AP600 to AP1000	
4.4.2	Description of Thermal and Hydraulic Design of the Reactor Core	4.4-4
	AP600 to AP1000	
	Table 4.4-1 revised to reflect new core design	
4.4.3	Description of the Thermal and Hydraulic Design of the Reactor Coolant System	4.4-20
	AP600 to AP1000	
4.4.4	Evaluation	4.4-21
	AP600 to AP1000	
4.4.5	Testing and Verification	4.4-30
	No Change	
4.4.6	Instrumentation Requirements	4.4-31

TIER 2 MASTER TABLE OF CONTENTS (Cont.)

Section	Title	Page
	No Change	
	4.4.7 Combined License Information	4.4-35
	AP600 to AP1000	
	4.4.8 References	4.4-35
	No Change	
4.5	Reactor Materials	4.5-1
	4.5.1 Control Rod and Drive System Structural Materials	4.5-1
	No Change	
	4.5.2 Reactor Internal and Core Support Materials	4.5-3
	No Change	
	4.5.3 Combined License Information	4.5-4
	No Change	
	4.5.4 References	4.5-4
	No Change	
4.6	Functional Design of Reactivity Control Systems	4.6-1
	4.6.1 Information for Control Rod Drive System	4.6-1
	No Change	
	4.6.2 Evaluations of the Control Rod Drive System	4.6-1
	AP600 to AP1000	
	4.6.3 Testing and Verification of the Control Rod Drive System	4.6-2
	No Change	
	4.6.4 Information for Combined Performance of Reactivity Systems	4.6-2
	AP600 to AP1000	
	4.6.5 Evaluation of Combined Performance	4.6-3
	No Change	
	4.6.6 Combined License Information	4.6-4
	No Change	
CHAPTER 5	REACTOR COOLANT SYSTEM AND CONNECTED SYSTEMS	5.1-1
5.1	Summary Description	5.1-1
	5.1.1 Design Bases	5.1-1
	Selected Figures	
	5.1.2 Design Description	5.1-2
	No Text Change	
	5.1.3 System Components	5.1-4
	AP600 to AP1000	
	5.1.4 System Performance Characteristics	5.1-7
	No Text Change	
	5.1.5 Combined License Information	5.1-9
	No Change	
5.2	Integrity of Reactor Coolant Pressure Boundary	5.2-1

TIER 2 MASTER TABLE OF CONTENTS (Cont.)

Section	Title	Page
5.2.1	Compliance with Codes and Code Cases	5.2-1
	No Change	
5.2.2	Overpressure Protection	5.2-5
	Change in version of ASME Code	
5.2.3	Reactor Coolant Pressure Boundary Materials	5.2-9
	No Change	
5.2.4	Inservice Inspection and Testing of Class 1 Components	5.2-20
	Change AP600 to AP1000	
	Change in version of ASME code	
5.2.5	Detection of Leakage Through Reactor Coolant Pressure Boundary	5.2-23
	Change AP600 to AP1000	
5.2.6	Combined License Information Items	5.2-32
	No Change	
5.2.7	References	5.2-32
	No Change	
5.3	Reactor Vessel	5.3-1
5.3.1	Reactor Vessel Design	5.3-1
	No Text Change	
5.3.2	Reactor Vessel Materials	5.3-3
	Change AP600 to AP1000	
5.3.3	Pressure-Temperature Limits	5.3-13
	No Text Change	
5.3.4	Reactor Vessel Integrity	5.3-14
	Change in Reactor Vessel Length and Weight	
	Change in # of CRDM	
	Change in calculated fluence on reactor vessel	
5.3.5	Reactor Vessel Insulation	5.3-20
	Change AP600 to AP1000	
5.3.6	Combined License Information	5.3-22
	No Change	
5.3.7	References	5.3-2
	No Change	
5.4	Component and Subsystem Design	5.4-1
5.4.1	Reactor Coolant Pump Assembly	5.4-1
	No Text Change - AP600 to AP1000	
	Change RCP parameters	
	Add Description of RCP Motor/ Variable Controller	
5.4.2	Steam Generators	5.4-10
	Change Model Delta-75 to Model Delta-125	
	Change SG parameters	
	Change selected figures	

TIER 2 MASTER TABLE OF CONTENTS (Cont.)

Section		Title	Page
	5.4.3	Reactor Coolant System Piping	5.4-23
		No Change – AP600 to AP1000	
	5.4.4	Main Steam Line Flow Restriction	5.4-28
		Change in normal steam line flow rate / DP information	
	5.4.5	Pressurizer	5.4-29
		No Text Change – AP600 to AP1000	
		Increase in pressurizer volume	
	5.4.6	Automatic Depressurization System Valves	5.4-36
		No Change in ADS Stages 1-3	
		Change in description of the size of 4th stage ADS valves / lines	
	5.4.7	Normal Residual Heat Removal System	5.4-39
		Change in description of cooldown time / temperature	
		Add description of miniflow isolation valve	
		Change RNS parameters	
	5.4.8	Valves	5.4-53
		No Change – AP600 to AP1000	
	5.4.9	Reactor Coolant System Pressure Relief Devices	5.4-62
		No Text Changes – AP600 to AP1000	
		Changes in relief valve capacities	
	5.4.10	Component Supports	5.4-65
		Change in description of SG supports	
	5.4.11	Pressurizer Relief Discharge	5.4-68
		No Change – AP600 to AP1000	
	5.4.12	Reactor Coolant System High Point Vents	5.4-70
		No Change	
	5.4.13	Core Makeup Tank	5.4-74
		No Change	
	5.4.14	Passive Residual Heat Removal Heat Exchanger	5.4-76
		No Change	
	5.4.15	Combined License Information	5.4-79
		No Change	
	5.4.16	References	5.4-79
		No Change	
CHAPTER 6		ENGINEERED SAFETY FEATURES	6.0-1
6.0		Engineered Safety Features	6.0-1
		No Change – AP600 to AP1000	
6.1		Engineered Safety Features Materials	6.1-1
	6.1.1	Metallic Materials	6.1-1
		Change in version of code	
	6.1.2	Organic Materials	6.1-5

TIER 2 MASTER TABLE OF CONTENTS (Cont.)

Section	Title	Page
	No Change – AP600 to AP1000	
	6.1.3 Combined License Information Items	6.1-11
	No Change – AP600 to AP1000	
	6.1.4 References	6.1-11
	No Change	
6.2	Containment Systems	6.2-1
	6.2.1 Containment Functional Design	6.2-1
	Change containment pressure / temperature analysis results	
	6.2.2 Passive Containment Cooling System	6.2-19
	Change PCS tank / flow rate parameters	
	6.2.3 Containment Isolation System	6.2-29
	No Change – AP600 to AP1000	
	6.2.4 Containment Hydrogen Control System	6.2-39
	Change containment hydrogen analysis results	
	6.2.5 Containment Leak Rate Test System	6.2-56
	No Change – AP600 to AP1000	
	6.2.6 Combined License Information for Containment Leak Rate Testing	6.2-62
	No Change – AP600 to AP1000	
	6.2.7 References	6.2-62
	No Change – AP600 to AP1000	
6.3	Passive Core Cooling System	6.3-1
	6.3.1 Design Basis	6.3-2
	No Change – AP600 to AP1000	
	6.3.2 System Design	6.3-6
	No Text Change – AP600 to AP1000	
	Change to system parameters	
	6.3.3 Performance Evaluation	6.3-33
	No Text Change – AP600 to AP1000	
	6.3.4 Post-72 Hour Actions	6.3-45
	Add post-72 hour action for spent fuel pool makeup	
	6.3.5 Limits on System Parameters	6.3-46
	No Change	
	6.3.6 Inspection and Testing Requirements	6.3-46
	No Text Change – AP600 to AP1000	
	6.3.7 Instrumentation Requirements	6.3-48
	No Change – AP600 to AP1000	
	6.3.8 Combined License Information	6.3-53
	No Change – AP600 to AP1000	
	6.3.9 References	6.3-53
	No Change	
6.4	Habitability Systems	6.4-1
	No Change	

TIER 2 MASTER TABLE OF CONTENTS (Cont.)

Section	Title	Page
6.4.1	Safety Design Basis	6.4-1
	No Change – AP600 to AP1000	
6.4.2	System Description	6.4-2
	No Change	
6.4.3	System Operation	6.4-7
	No Change - AP600 to AP1000	
6.4.4	System Safety Evaluation	6.4-9
	No Changes pending final MCR dose analysis	
6.4.5	Inservice Inspection/Inservice Testing	6.4-10
	No Changes – AP600 to AP1000	
6.4.6	Instrumentation Requirements	6.4-12
	No Change	
6.4.7	Combined License Information	6.4-12
	No Change	
6.4.8	References	6.4-12
	No Change	
6.5	Fission Product Removal and Control Systems	6.5-1
6.5.1	Engineered Safety Feature (ESF) Filter Systems	6.5-1
	No Change	
6.5.2	Containment Spray System	6.5-1
	Change in elevation of containment spray ring headers	
6.5.3	Fission Product Control Systems	6.5-5
	No Change – AP600 to AP1000	
6.5.4	Combined License Information	6.5-6
	No Change	
6.5.5	References	6.5-6
	No Change	
6.6	In-service Inspection of Class 2 and 3 Components	6.6-1
6.6.1	Components Subject to Examination	6.6-1
	No Change	
6.6.2	Accessibility	6.6-1
	No Change	
6.6.3	Examination Techniques and Procedures	6.6-2
	No Change	
6.6.4	Inspection Intervals	6.6-3
	No Change	
6.6.5	Examination Categories and Requirements	6.6-3
	No Change	
6.6.6	Evaluation of Examination Results	6.6-3
	No Change	

TIER 2 MASTER TABLE OF CONTENTS (Cont.)

Section	Title	Page
6.6.7	System Pressure Tests	6.6-3
	No Change	
6.6.8	Augmented Inservice Inspection to Protect against Postulated Piping Failures	6.6-3
	No Change	
6.6.9	Combined License Information Items	6.6-4
	No Change	
APPENDIX 6A	HYDROGEN AND FISSION PRODUCT DISTRIBUTION IN THE AP600 POST-DESIGN BASIS ACCIDENT CONTAINMENT ATMOSPHERE	6A-1
	Re-assessment of mixing analysis for AP1000 containment	
6A.1	Design Basis Sequence Assumptions	6A-1
6A.1.1	Break Size and Fission Product Release Location in Containment	6A-2
6A.1.2	Design-Basis Hydrogen Source Locations	6A-4
6A.2	Containment Natural Circulation and Mixing	6A-5
6A.3	Insights From the Passive Containment Cooling System Large Scale Test and AP600 Stratification Studies	6A-8
6A.4	Conclusions	6A-10
6A.5	References	6A-10
CHAPTER 7	INSTRUMENTATION AND CONTROLS	7.1-1
7.1	Introduction	7.1-1
	AP600 to AP1000	
7.1.1	The AP600 Instrumentation and Control Architecture	7.1-2
	AP600 to AP1000	
7.1.2	General Protection Subsystem Configuration	7.1-6
	No Change	
7.1.3	Plant Control System	7.1-28
	No Change	
7.1.4	Identification of Safety Criteria	7.1-33
	AP600 to AP1000	
7.1.5	AP600 Protective Functions	7.1-49
	AP600 to AP1000	
7.1.6	Combined License Information	7.1-49
	AP600 to AP1000	
7.1.7	References	7.1-49
7.2	Reactor Trip	7.2-1
7.2.1	Description	7.2-1
	No Change	
7.2.2	Analyses	7.2-14

TIER 2 MASTER TABLE OF CONTENTS (Cont.)

Section	Title	Page
	No Change	
	7.2.3 Combined License Information	7.2-17
	No Change	
	7.2.4 References	7.2-17
7.3	Engineered Safety Features	7.3-1
	AP600 to AP1000	
	7.3.1 Description	7.3-1
	AP600 to AP1000	
	7.3.2 Analysis for Engineered Safety Features Actuation	7.3-22
	No Change	
	7.3.3 Combined License Information	7.3-25
	No Change	
7.4	Systems Required for Safe Shutdown	7.4-1
	7.4.1 Safe Shutdown	7.4-3
	AP600 to AP1000	
	7.4.2 Safe Shutdown Systems	7.4-10
	No Change	
	7.4.3 Safe Shutdown from Outside the Main Control Room	7.4-11
	No Change	
	7.4.4 Combined License Information	7.4-14
	No Change	
	7.4.5 References	7.4-14
	No Change	
7.5	Safety-Related Display Information	7.5-1
	7.5.1 Introduction	7.5-1
	AP600 to AP1000	
	7.5.2 Variable Classifications and Requirements	7.5-1
	AP600 to AP1000	
	7.5.3 Description of Variables	7.5-9
	AP600 to AP1000	
	7.5.4 Processing and Display Equipment	7.5-11
	AP600 to AP1000	
	7.5.5 Combined License Information	7.5-13
	No Change	
7.6	Interlock Systems Important to Safety	7.6-1
	7.6.1 Prevention of Overpressurization of Low-Pressure Systems	7.6-1
	No Change	
	7.6.2 Availability of Engineered Safety Features	7.6-2
	No Change	
	7.6.3 Combined License Information	7.6-6
	No Change	

TIER 2 MASTER TABLE OF CONTENTS (Cont.)

Section	Title	Page
7.7	Control and Instrumentation Systems	7.7-1
	AP600 to AP1000	
	7.7.1 Description	7.7-2
	No Change	
	7.7.2 Analysis	7.7-20
	No Change	
	7.7.3 Combined License Information	7.7-21
	No Change	
CHAPTER 8	ELECTRIC POWER	8.1-1
8.1	Introduction	8.1-1
	No Change	
	8.1.1 Utility Grid Description	8.1-1
	No Change	
	8.1.2 Onsite Power System Description	8.1-1
	No Change	
	8.1.3 Safety-Related Loads	8.1-2
	No Change	
	8.1.4 Design Basis	8.1-2
	AP600 to AP1000	
	8.1.5 Combined License Information	8.1-5
	No Change	
8.2	Offsite Power System	8.2-1
	8.2.1 System Description	8.2-1
	No Change	
	8.2.2 Grid Stability	8.2-2
	AP600 to AP1000	
	8.2.3 Conformance to Criteria	8.2-3
	AP600 to AP1000	
	8.2.4 Standards and Guides	8.2-3
	No Change	
	8.2.5 Combined License Information for Offsite Electrical Power	8.2-3
	AP600 to AP1000	
	8.2.6 References	8.2-4
	No Change	
8.3	Onsite Power Systems	8.3-1
	8.3.1 AC Power Systems	8.3-1
	AP600 to AP1000	
	8.3.2 DC Power Systems	8.3-15
	AP600 to AP1000	
	8.3.3 Combined License Information for Onsite Electrical Power	8.3-26

TIER 2 MASTER TABLE OF CONTENTS (Cont.)

Section		Title	Page
		AP600 to AP1000	
	8.3.4	References	8.3-26
		No Change	
CHAPTER 9		AUXILIARY SYSTEMS	9.1-1
9.1		Fuel Storage and Handling	9.1-1
	9.1.1	New Fuel Storage	9.1-1
		AP600 to AP1000	
		Deeper pit	
		Heavier fuel assembly	
		Figure 9.1-1 change for longer fuel assembly	
	9.1.2	Spent Fuel Storage	9.1-5
		AP600 to AP1000	
		Deeper pool	
		Different water volume	
		Heavier fuel assembly	
		Table 9.1-2 changes to reflect changes above	
		Figure 9.1-3 changes for longer fuel assembly	
	9.1.3	Spent Fuel Pool Cooling System	9.1-10
		AP600 to AP1000	
		Increased core decay power	
		Reduced time for extended loss of normal spent fuel pool cooling	
		Table 9.1-3 changes to reflect different flow rates and temperatures	
		Table 9.1-4 changes to reflect different abnormal event results	
	9.1.4	Light Load Handling System (Related to Refueling)	9.1-23
		Reduced height of water above fuel assembly during handling	
	9.1.5	Overhead Heavy Load Handling Systems	9.1-36
		AP600 to AP1000	
		Heavier fuel assembly	
	9.1.6	Combined License Information for Fuel Storage Handling	9.1-42
		No Change	
	9.1.7	References	9.1-43
		No Change	
9.2		Water Systems	9.2-1
	9.2.1	Service Water System	9.2-1
		Table 9.2.1-1 changes for flow and heat loads	
	9.2.2	Component Cooling Water System	9.2-8
		AP600 to AP1000	
		Table 9.2.2-1 for UA and flows	
	9.2.3	Demineralized Water Treatment System	9.2-18
		No Change	

TIER 2 MASTER TABLE OF CONTENTS (Cont.)

Section	Title	Page
9.2.4	Demineralized Water Transfer and Storage System	9.2-22
	AP600 to AP1000	
9.2.5	Potable Water System	9.2-27
	No Change	
9.2.6	Sanitary Drainage System	9.2-30
	AP600 to AP1000	
9.2.7	Central Chilled Water System	9.2-32
	No Change	
9.2.8	Turbine Building Closed Cooling Water System	9.2-38
	No Change	
9.2.9	Waste Water System	9.2-43
	No Change	
9.2.10	Hot Water Heating System	9.2-46
	AP600 to AP1000	
9.2.11	Combined License Information	9.2-50
	No Change	
9.2.12	References	9.2-50
	No Change	
9.3	Process Auxiliaries	9.3-1
9.3.1	Compressed and Instrument Air System	9.3-1
	No Change	
9.3.2	Plant Gas System	9.3-7
	No Change	
9.3.3	Primary Sampling System	9.3-10
	AP600 to AP1000	
9.3.4	Secondary Sampling System	9.3-15
	No Change	
9.3.5	Equipment and Floor Drainage Systems	9.3-17
	No Change	
9.3.6	Chemical and Volume Control System	9.3-22
	No Change	
9.3.7	Combined License Information	9.3-45
	No Change	
9.3.8	References	9.3-45
	No Change	
9.4	Air-Conditioning, Heating, Cooling, and Ventilation System	9.4-1
	No Change	
9.4.1	Nuclear Island Nonradioactive Ventilation System	9.4-1
	No Change	
9.4.2	Annex/Auxiliary Buildings Nonradioactive HVAC System	9.4-18
	No Change	

TIER 2 MASTER TABLE OF CONTENTS (Cont.)

Section	Title	Page
9.4.3	Radiologically Controlled Area Ventilation System	9.4-31
	No Change	
9.4.4	Balance-of-Plant Interface	9.4-41
	AP600 to AP1000	
9.4.5	Engineered Safety Features Ventilation System	9.4-41
	AP600 to AP1000	
9.4.6	Containment Recirculation Cooling System	9.4-41
	Table 9.4.6-1 heat load adjustments	
9.4.7	Containment Air Filtration System	9.4-46
	Air changeover rate during refueling reduced	
	Table 9.4.7-1 heat load adjustments	
9.4.8	Radwaste Building HVAC System	9.4-54
	No Change	
9.4.9	Turbine Building Ventilation System	9.4-59
	No Change	
9.4.10	Diesel Generator Building Heating and Ventilation System	9.4-65
	No Change	
9.4.11	Health Physics and Hot Machine Shop HVAC System	9.4-72
	No Change	
9.4.12	Combined License Information	9.4-77
	AP600 to AP1000	
9.4.13	References	9.4-77
	No Change	
9.5	Other Auxiliary Systems	9.5-1
9.5.1	Fire Protection System	9.5-1
	AP600 to AP1000	
	Table 9.5.1-1, AP600 to AP1000	
9.5.2	Communication System	9.5-16
	No Change	
9.5.3	Plant Lighting System	9.5-20
	No Change	
9.5.4	Standby Diesel and Auxiliary Boiler Fuel Oil System	9.5-23
	No Change	
9.5.5	References	9.5-30
	No Change	
APPENDIX 9A	FIRE PROTECTION ANALYSIS	9A-1
9A.1	Introduction	9A-1
	AP600 to AP1000	

TIER 2 MASTER TABLE OF CONTENTS (Cont.)

Section	Title	Page
9A.2	Fire Protection Analysis Methodology	9A-1
9A.2.1	Fire Area Description	9A-1
	No Text Change	
	Building background changes for Figure 9A-1, Sheets 10, 11, 12 & 16	
9A.2.2	Combustible Material Survey	9A-2
	No Change	
9A.2.3	Fire Severity Categorization	9A-2
	No Change	
9A.2.4	Combustible Loading and Equivalent Fire Duration Calculations	9A-2
	No Change	
9A.2.5	Fire Protection Adequacy	9A-4
	No Change	
9A.2.6	Fire Protection System Integrity	9A-4
	No Change	
9A.2.7	Safe Shutdown Evaluation	9A-4
	No Change	
9A.3	Fire Protection Analysis Results	9A-11
	No Change	
9A.3.1	Nuclear Island	9A-12
	No Change	
9A.3.2	Turbine Building	9A-87
	No Change	
9A.3.3	Yard Area And Outlying Buildings	9A-99
	No Change	
9A.3.4	Annex Building	9A-100
	No Change	
9A.3.5	Radwaste Building	9A-119
	No Change	
9A.3.6	Diesel Generator Building	9A-121
	No Change	
9A.3.7	Special Topics	9A-126
	AP600 to AP1000	
9A.4	References	9A-129
	No Change	
CHAPTER 10	STEAM AND POWER CONVERSION SYSTEM	10.1-1
10.1	Summary Description	10.1-1
	No Change	
10.1.1	General Description	10.1-1
	No Text Change	

TIER 2 MASTER TABLE OF CONTENTS (Cont.)

Section	Title	Page
	Table 10.1-1 and Figure 10.1-1 reflect higher power	
10.1.2	Protective Features	10.1-2
	No Change	
10.1.3	Combined License Information on Erosion-Corrosion Monitoring	10.1-4
	No Change	
10.2	Turbine-Generator	10.2-1
	No Change	
10.2.1	Design Basis	10.2-1
	No Change	
10.2.2	System Description	10.2-1
	AP600 to AP1000	
	Table 10.2-1 reflects higher power	
10.2.3	Turbine Rotor Integrity	10.2-11
	AP600 to AP1000	
10.2.4	Evaluation	10.2-16
	No Change	
10.2.5	Instrumentation Applications	10.2-17
	No Change	
10.2.6	Combined License Information on Turbine Maintenance and Inspection	10.2-18
	No Change	
10.2.7	References	10.2-18
	No Change	
10.3	Main Steam Supply System	10.3-1
	AP600 to AP1000	
10.3.1	Design Basis	10.3-1
	AP600 to AP1000	
10.3.2	System Description	10.3-4
	AP600 to AP1000	
	Tables 10.3.2-1, 10.3.2-1, 10.3.2-4 reflect higher power	
10.3.3	Safety Evaluation	10.3-10
	AP600 to AP1000	
10.3.4	Inspection and Testing Requirements	10.3-12
	PORV relief capacity increased	
10.3.5	Water Chemistry	10.3-13
	AP600 to AP1000	
10.3.6	Steam and Feedwater System Materials	10.3-16
	No Change	
10.3.7	Combined License Information	10.3-17
	No Change	
10.3.8	References	10.3-17

TIER 2 MASTER TABLE OF CONTENTS (Cont.)

Section	Title	Page
	No Change	
10.4	Other Features of Steam and Power Conversion System	10.4-1
	No Change	
	10.4.1 Main Condensers	10.4-1
	AP600 to AP1000	
	Table 10.4.1-1 reflect higher power	
	10.4.2 Main Condenser Evacuation System	10.4-4
	No Change	
	10.4.3 Gland Seal System	10.4-6
	No Change	
	10.4.4 Turbine Bypass System	10.4-8
	No Change	
	10.4.5 Circulating Water System	10.4-12
	No Change	
	Table 10.4.5-1 reflect higher power	
	10.4.6 Condensate Polishing System	10.4-17
	No Change	
	10.4.7 Condensate and Feedwater Systems	10.4-20
	No Change	
	10.4.8 Steam Generator Blowdown System	10.4-35
	No Change	
	10.4.9 Startup Feedwater System	10.4-44
	AP600 to AP1000	
	10.4.10 Auxiliary Steam System	10.4-53
	No Change	
	10.4.11 Turbine Island Chemical Feed	10.4-56
	No Change	
	10.4.12 Combined License Information	10.4-59
	No Change	
	10.4.13 References	10.4-59
	No Change	
CHAPTER 11	RADIOACTIVE WASTE MANAGEMENT	11.1-1
11.1	Source Terms	11.1-1
	No Change	
	11.1.1 Design Basis Reactor Coolant Activity	11.1-1
	No Text Changes	
	Tables 11.1-1, 11.1-2 and 11.1-3 reflect higher power	
	11.1.2 Design Basis Secondary Coolant Activity	11.1-4
	No Text Changes	
	Tables 11.1-4, 11.1-5 and 11.1-6 reflect higher power	

TIER 2 MASTER TABLE OF CONTENTS (Cont.)

Section	Title	Page
11.1.3	Realistic Reactor Coolant and Secondary Coolant Activity	11.1-4
	No Text Changes	
	Tables 11.1-7 and 11.1-8 reflect higher power	
11.1.4	Core Source Term	11.1-4
	No Change	
11.1.5	Process Leakage Sources	11.1-4
	No Change	
11.1.6	Combined License Information	11.1-4
	No Change	
11.1.7	References	11.1-5
	No Change	
11.2	Liquid Waste Management Systems	11.2-1
	No Change	
11.2.1	Design Basis	11.2-1
	No Text Changes	
	Table 11.2-1 reflect increased reactor coolant inventory	
11.2.2	System Description	11.2-6
	AP600 to AP1000	
	Table 11.2-4 reflect new tank sizing criteria for higher power	
11.2.3	Radioactive Releases	11.2-18
	Table 11.2-6 reflect new GALE input for higher power	
	Table 11.2-7 reflect new GALE output for higher power	
	Table 11.2-8 reflect new GALE output for higher power	
	Table 11.2-9 reflect new GALE output for higher power	
11.2.4	Preoperational Testing	11.2-20
	No Change	
11.2.5	Combined License Information	11.2-21
	No Change	
11.2.6	References	11.2-21
	No Change	
11.3	Gaseous Waste Management System	11.3-1
	AP600 to AP1000	
11.3.1	Design Basis	11.3-1
	AP600 to AP1000	
11.3.2	System Description	11.3-4
	AP600 to AP1000	
11.3.3	Radioactive Releases	11.3-9
	Tables 11.3-3 and 11.3-4 reflect new GALE output for higher power	
	Overall release fractions reflect higher power	
11.3.4	Inspection and Testing Requirements	11.3-11
	No Change	

TIER 2 MASTER TABLE OF CONTENTS (Cont.)

Section	Title	Page
	11.3.5 Combined License Information	11.3-11
	AP600 to AP1000	
	11.3.6 References	11.3-11
	No Change	
11.4	Solid Waste Management	11.4-1
	No Change	
	11.4.1 Design Basis	11.4-1
	AP600 to AP1000	
	11.4.2 System Description	11.4-3
	AP600 to AP1000	
	Tables 11.4-1through 11.4-9 reflect increased resin loading due to higher power	
	11.4.3 System Safety Evaluation	11.4-14
	No Change	
	11.4.4 Tests and Inspections	11.4-14
	No Change	
	11.4.5 Quality Assurance	11.4-14
	No Change	
	11.4.6 Combined License Information for Solid Waste Management System Process Control Program	11.4-14
	No Change	
	11.4.7 References	11.4-15
	No Change	
11.5	Radiation Monitoring	11.5-1
	No Change	
	11.5.1 Design Basis	11.5-1
	AP600 to AP1000	
	11.5.2 System Description	11.5-2
	No Change	
	11.5.3 Effluent Monitoring and Sampling	11.5-14
	No Change	
	11.5.4 Process and Airborne Monitoring and Sampling	11.5-14
	No Change	
	11.5.5 Post-Accident Radiation Monitoring	11.5-14
	No Change	
	11.5.6 Area Radiation Monitors	11.5-15
	AP600 to AP1000	
	11.5.7 Combined License Information	11.5-18
	No Change	
CHAPTER 12	RADIATION PROTECTION	12.1-1
12.1	Assuring that Occupational Radiation Exposures are As-Low-As-	

TIER 2 MASTER TABLE OF CONTENTS (Cont.)

Section	Title	Page
	Reasonably Achievable (ALARA)	12.1-1
	12.1.1 Policy Considerations	12.1-1
	AP600 to AP1000	
	12.1.2 Design Considerations	12.1-2
	AP600 to AP1000	
	12.1.3 Combined License Information	12.1-6
	No Change	
12.2	Radiation Sources	12.2-1
	No Change	
	12.2.1 Contained Sources	12.2-1
	Core and spent fuel power and power density changes due to higher power	
	Tables 12.2-1 through 12.2-21 revise to reflect higher core power	
	12.2.2 Airborne Radioactive Material Sources	12.2-6
	No Text Changes	
	Tables 12.2-23 through 12.2-27 revise to reflect higher power	
	12.2.3 Combined License Information	12.2-8
	No Change	
	12.2.4 References	12.2-8
	No Change	
12.3	Radiation Protection Design Features	12.3-1
	12.3.1 Facility Design Features	12.3-1
	AP600 to AP1000	
	12.3.2 Shielding	12.3-9
	Reduced height of water above fuel assembly during handling	
	12.3.3 Ventilation	12.3-16
	No Change	
	12.3.4 Area Radiation and Airborne Radioactivity Monitoring Instrumentation	12.3-19
	No Change	
	12.3.5 Combined License Information	12.3-19
	No Change	
	12.3.6 References	12.3-20
	No Change	
12.4	Dose Assessment	12.4-1
	AP600 to AP1000	
	12.4.1 Occupational Radiation Exposure	12.4-1
	AP600 to AP1000	
	No Other Text Changes	
	Tables 12.4-1 through 12.4-12 may change due to higher power	
	12.4.2 Radiation Exposure at the Site Boundary	12.4-5
	AP600 to AP1000	

TIER 2 MASTER TABLE OF CONTENTS (Cont.)

Section	Title	Page
	12.4.3 Combined License Information	12.4-5
	No Change	
12.5	Health Physics Facilities Design	12.5-1
	12.5.1 Objectives	12.5-1
	No Change	
	12.5.2 Equipment, Instrumentation, and Facilities	12.5-1
	No Change	
	12.5.3 Other Design Features	12.5-3-9
	Reduced height of water above fuel assembly during handling	
	12.5.4 Controlling Access and Stay Time	12.5-4
	No Change	
	12.5.5 Combined License Information	12.5-5
	No Change	
CHAPTER 13	CONDUCT OF OPERATION	13-1
	AP600 to AP1000	
13.1	Organizational Structure of Applicant	13-1
	AP600 to AP1000	
	13.1.1 Combined License Information Item	13-1
	AP600 to AP1000	
13.2	Training	13-1
	No Change	
	13.2.1 Combined License Information Item	13-1
	AP600 to AP1000	
13.3	Emergency Planning	13-1
	No Change	
	13.3.1 Combined License Information Item	13-2
	AP600 to AP1000	
13.4	Operational Review	13-2
	No Change	
	13.4.1 Combined License Information Item	13-2
	AP600 to AP1000	
13.5	Plant Procedures	13-2
	AP600 to AP1000	
	13.5.1 Combined License Information Item	13-3
	AP600 to AP1000	
13.6	Industrial Security	13-3
	No Change	
13.6.1	Preliminary Planning	13-3
	AP600 to AP1000	
13.6.2	Security Plan	13-4

TIER 2 MASTER TABLE OF CONTENTS (Cont.)

Section	Title	Page
	No Changes	
13.6.3	Plant Protection System	13-4
	AP600 to AP1000	
13.6.4	Physical Security Organization	13-5
	AP600 to AP1000	
13.6.5	Physical Barriers	13-5
	AP600 to AP1000	
13.6.6	Access Requirements	13-7
	No Changes	
13.6.7	Detection Aids	13-7
	AP600 to AP1000	
13.6.8	Security Lighting	13-8
	AP600 to AP1000	
13.6.9	Security Power Supply System	13-8
	AP600 to AP1000	
13.6.10	Communications	13-8
	AP600 to AP1000	
13.6.11	Testing and Maintenance	13-8
	No Changes	
13.6.12	Response Requirements	13-8
	No Changes	
13.6.13	Combined License Information Item	13-9
	AP600 to AP1000	
13.7	References	13-10
	No Changes	
CHAPTER 14	INITIAL TEST PROGRAM	14.1-1
14.1	Specific Information to be Included in Preliminary/Final Safety Analysis Reports	14.1-1
	AP600 to AP1000	
14.2	Specific Information to be Included in Standard Safety Analysis Reports	14.2-1
	AP600 to AP1000	
14.2.1	Summary of Test Program and Objectives	14.2-1
	No Changes	
14.2.2	Organization, Staffing, and Responsibilities	14.2-4
	AP600 to AP1000	
14.2.3	Test Specifications and Test Procedures	14.2-4
	No Changes	
14.2.4	Compliance of Test Program with Regulatory Guides	14.2-6
	No Changes	

TIER 2 MASTER TABLE OF CONTENTS (Cont.)

Section	Title	Page
14.2.5	Utilization of Reactor Operating and Testing Experience in the Development of Test Program	14.2-6
	AP600 to AP1000	
14.2.6	Use of Plant Operating and Emergency Procedures	14.2-10
	No Changes	
14.2.7	Initial Fuel Loading and Initial Criticality	14.2-10
	No Changes	
14.2.8	Test Program Schedule	14.2-13
	No Changes	
14.2.9	Preoperational Test Descriptions	14.2-14
	AP600 to AP1000	
14.2.10	Startup Test Procedures	14.2-89
	AP600 to AP1000	
14.3	Certified Design Material	14.3-1
	AP600 to AP1000	
	Some values in Table 14.3-2 change	
	Some values in Table 14.3-7 may change	
14.3.1	CDM Section 1.0, Introduction	14.3-2
	AP600 to AP1000	
14.3.2	CDM Section 2.0, System Based Design Descriptions and ITAAC	14.3-3
	AP600 to AP1000	
14.3.3	CDM Section 3.0, Non-System Based Design Descriptions and ITAAC	14.3-10
	No Change	
14.3.4	Certified Design Material Section 4.0, Interface Requirements	14.3-10
	AP600 to AP1000	
14.3.5	CDM Section 5.0, Site Parameters	14.3-11
	AP600 to AP1000	
14.3.6	Initial Test Program	14.3-11
	AP600 to AP1000	
14.3.7	Element of AP600 Design Material Incorporated into the Certified Design Material	14.3-12
	AP600 to AP1000	
14.3.8	Summary	14.3-12
	AP600 to AP1000	
14.3.9	References	14.3-13
	No Changes	
14.4	Combined License Applicant Responsibilities	14.4-1
	AP600 to Ap1000	
14.4.1	Organization and Staffing	14.4-1

TIER 2 MASTER TABLE OF CONTENTS (Cont.)

Section	Title	Page
	AP600 to AP1000	
14.4.2	Test Specifications and Procedures	14.4-1
	No Changes	
14.4.3	Conduct of Test Program	14.4-1
	No Changes	
14.4.4	Review and Evaluation of Test Results	14.4-1
	No Changes	
14.4.5	Interface Requirements	14.4-1
	No Changes	
14.4.6	First-Plant-Only and Three-Plant-Only Tests	14.4-2
	No Changes	
CHAPTER 15	ACCIDENT ANALYSES	15.0-1
15.0	ACCIDENT ANALYSES	15.0-1
15.0.1	Classification of Plant Conditions	15.0-1
	No Change	
15.0.2	Optimization of Control Systems	15.0-5
	No Change	
15.0.3	Plant Characteristics and Initial Conditions Assumed in the Accident Analyses	15.0-5
	AP600 to AP1000	
	Some values in tables will change	
15.0.4	Reactivity Coefficients Assumed in the Accident Analysis	15.0-7
	No Text Change	
	Figure 10.0.4-1 will change	
15.0.5	Rod Cluster Control Assembly Insertion Characteristics	15.0-7
	No Text Change	
	Some Figures will change	
15.0.6	Protection and Safety Monitoring System Setpoints and Time Delays to Trip Assumed in Accident Analyses	15.0-8
	No Text Change	
	Some values in Tables will change	
15.0.7	Instrumentation Drift and Calorimetric Errors, Power Range Neutron Flux	15.0-9
	No Change	
15.0.8	Plant Systems and Components Available for Mitigation of Accident Effects	15.0-9
	No Change	
15.0.9	Fission Product Inventories	15.0-9
	No Change	
15.0.10	Residual Decay Heat	15.0-10
	AP600 to AP1000	

TIER 2 MASTER TABLE OF CONTENTS (Cont.)

Section	Title	Page
	15.0.11 Computer Codes Used	15.0-11
	No Change	
	15.0.12 Component Failures	15.0-12
	No Change	
	15.0.13 Operator Actions	15.0-14
	No Change	
	15.0.14 Loss of Offsite ac Power	15.0-14
	AP600 to AP1000	
	15.0.15 Combined License Information	15.0-15
	No Change	
	15.0.16 References	15.0-15
	No Change	
15.1	Increase in Heat Removal From the Primary System	15.1-1
	No Change	
	15.1.1 Feedwater System Malfunctions that Result in a Decrease in Feedwater Temperature	15.1-1
	Results of analysis will change	
	15.1.2 Feedwater System Malfunctions that Result in an Increase in Feedwater Flow	15.1-3
	Results of analysis will change	
	15.1.3 Excessive Increase in Secondary Steam Flow	15.1-6
	Results of analysis will change	
	15.1.4 Inadvertent Opening of a Steam Generator Relief or Safety Valve	15.1-9
	Results of analysis will change	
	15.1.5 Steam System Piping Failure	15.1-13
	Results of analysis will change	
	15.1.6 Inadvertent Operation of the PRHR Heat Exchanger	15.1-22
	Results of analysis will change	
	15.1.7 Combined License Information	15.1-26
	No Change	
	15.1.8 References	15.1-26
	No Change	
15.2	Decrease in Heat Removal by the Secondary System	15.2-1
	No Change	
	15.2.1 Steam Pressure Regulator Malfunction or Failure that Results in Decreasing Steam Flow	15.2-1
	AP600 to AP1000	

TIER 2 MASTER TABLE OF CONTENTS (Cont.)

Section	Title	Page
	15.2.2 Loss of External Electrical Load	15.2-1
	Results of analysis will change	
	15.2.3 Turbine Trip	15.2-3
	AP600 to AP1000	
	Results of analysis will change	
	15.2.4 Inadvertent Closure of Main Steam Isolation Valves	15.2-9
	No Change	
	15.2.5 Loss of Condenser Vacuum and Other Events Resulting in Turbine Trip	15.2-9
	No Change	
	15.2.6 Loss of ac Power to the Plant Auxiliaries	15.2-9
	Results of analysis will change	
	15.2.7 Loss of Normal Feedwater Flow	15.2-15
	Results of analysis will change	
	15.2.8 Feedwater System Pipe Break	15.2-18
	Results of analysis will change	
	15.2.9 Combined License Information	15.2-23
	No Change	
	15.2.10 References	15.2-23
	No Change	
15.3	Decrease in Reactor Coolant System Flow Rate	15.3-1
	No Change	
	15.3.1 Partial Loss of Forced Reactor Coolant Flow	15.3-1
	Results of analysis will change	
	15.3.2 Complete Loss of Forced Reactor Coolant Flow	15.3-4
	AP600 to AP1000	
	Results of analysis will change	
	15.3.3 Reactor Coolant Pump Shaft Seizure (Locked Rotor)	15.3-5
	Results of analysis will change	
	15.3.4 Reactor Coolant Pump Shaft Break	15.3-10
	Results of analysis will change	
	15.3.5 Combined License Information	15.3-11
	No Change	
	15.3.6 References	15.3-11
	No Change	
15.4	Reactivity and Power Distribution Anomalies	15.4-1
	15.4.1 Uncontrolled Rod Cluster Control Assembly Bank Withdrawal	

TIER 2 MASTER TABLE OF CONTENTS (Cont.)

Section	Title	Page
	from a Subcritical or Low-power Startup Condition	15.4-1
	Results of analysis will change	
15.4.2	Uncontrolled Rod Cluster Control Assembly Bank Withdrawal at Power	15.4-6
	Results of analysis will change	
15.4.3	Rod Cluster Control Assembly Misalignment (System Malfunction or Operator Error)	15.4-12
	Results of analysis will change	
15.4.4	Startup of an Inactive Reactor Coolant Pump at an Incorrect Temperature	15.4-18
	Results of analysis will change	
15.4.5	A Malfunction or Failure of the Flow Controller in a Boiling Water Reactor Loop that Results in an Increased Reactor Coolant Flow Rate	15.4-20
	AP600 to AP1000	
15.4.6	Chemical and Volume Control System Malfunction that Results in a Decrease in the Boron Concentration in the Reactor Coolant	15.4-20
	AP600 to AP1000	
	Results of analysis will change	
15.4.7	Inadvertent Loading and Operation of a Fuel Assembly in an Improper Position	15.4-28
	Results of analysis will change	
15.4.8	Spectrum of Rod Cluster Control Assembly Ejection Accidents	15.4-30
	AP600 to AP1000	
	Results of analysis will change	
15.4.9	Combined License Information	15.4-42
	No Change	
15.4.10	References	15.4-42
	No Change	
15.5	Increase in Reactor Coolant Inventory	15.5-1
	No Change	
15.5.1	Inadvertent Operation of the Core Makeup Tanks During Power Operation	15.5-1
	AP600 to AP1000	
	Results of analysis will change	
15.5.2	Chemical and Volume Control System Malfunction That Increases Reactor Coolant Inventory	15.5-5
	Results of analysis will change	
15.5.3	Boiling Water Reactor Transients	15.5-10

TIER 2 MASTER TABLE OF CONTENTS (Cont.)

Section	Title	Page
	AP600 to AP1000	
	15.5.4 Combined License Information	15.5-10
	No Change	
	15.5.5 References	15.5-10
	No Change	
15.6	Decrease in Reactor Coolant Inventory	15.6-1
	No Change	
	15.6.1 Inadvertent Opening of a Pressurizer Safety Valve or Inadvertent Operation of the ADS	15.6-1
	Results of analysis will change	
	15.6.2 Failure of Small Lines Carrying Primary Coolant Outside Containment	15.6-4
	Results of analysis will change	
	15.6.3 Steam Generator Tube Rupture	15.6-6
	AP600 to AP1000	
	Results of analysis will change	
	15.6.4 Spectrum of Boiling Water Reactor Steam System Piping Failures Outside of Containment	15.6-16
	AP600 to AP1000	
	15.6.5 Loss-of-coolant Accidents Resulting from a Spectrum of Postulated Piping Breaks Within the Reactor Coolant Pressure Boundary	15.6-17
	AP600 to AP1000	
	Results of analysis will change	
	15.6.6 References	15.6-90
	No Change	
15.7	Radioactive Release From a Subsystem or Component	15.7-1
	No Change	
	15.7.1 Gas Waste Management System Leak or Failure	15.7-1
	AP600 to AP1000	
	15.7.2 Liquid Waste Management System Leak or Failure (Atmospheric Release)	15.7-1
	AP600 to AP1000	
	15.7.3 Release of Radioactivity to the Environment Due to a Liquid Tank Failure	15.7-1
	No Change	
	15.7.4 Fuel Handling Accident	15.7-1
	Results of analysis will change	
	15.7.5 Spent Fuel Cask Drop Accident	15.7-6
	Results of analysis will change	
	15.7.6 Combined License Information	15.7-7
	AP600 to AP1000	
	15.7.7 References	15.7-7

TIER 2 MASTER TABLE OF CONTENTS (Cont.)

Section	Title	Page
	No Change	
15.8	Anticipated Transients without Scram	15.8-1
	15.8.1 General Background	15.8-1
	No Change	
	15.8.2 Anticipated Transients without Scram in the AP600	15.8-1
	AP600 to AP1000	
	15.8.3 Conclusion	15.8-1
	AP600 to AP1000	
	15.8.4 Combined License Information	15.8-1
	No Change	
	15.8.5 References	15.8-1
	No Change	
APPENDIX 15A	EVALUATION MODELS AND PARAMETERS FOR ANALYSIS OF RADIOLOGICAL CONSEQUENCES OF ACCIDENTS	15A-1
	No Change	
15A.1	Offsite Dose Calculation Models	15A-1
	No Change	
	15A.1.1 Immersion Dose Models	15A-1
	No Change	
	15A.1.2 Inhalation Dose (Committed Effective Dose Equivalent)	15A-2
	No Change	
	15A.1.3 Total Dose (Total Effective Dose Equivalent)	15A-2
	No Change	
	15A.2 Main Control Room Dose Models	15A-2
	No Change	
	15A.2.1 Immersion Dose Models	15A-2
	No Change	
	15A.2.2 Inhalation Dose	15A-4
	No Change	
	15A.2.3 Total Dose (Total Effective Dose Equivalent)	15A-4
	No Change	
15A.3	General Analysis Parameters	15A-4
	15A.3.1 Source Terms	15A-4
	Source Term changes	
	15A.3.2 Nuclide Parameters	15A-6
	Source Term changes	
	15A.3.3 Atmospheric Dispersion Factors	15A-6
	Chi/Q changes	
15A.4	References	15A-7
	No Change	

TIER 2 MASTER TABLE OF CONTENTS (Cont.)

Section	Title	Page
APPENDIX 15B	REMOVAL OF AIRBORNE ACTIVITY FROM THE CONTAINMENT ATMOSPHERE FOLLOWING A LOCA	15B-1
	AP600 to AP1000	
15B.1	Elemental Iodine Removal	15B-1
	Deposition areas and volume changes	
15B.2	Aerosol Removal	15B-2
	AP600 to AP1000	
	15B.2.1 Mathematical Models	15B-2
	No Change	
	15B.2.2 Other Removal Mechanisms	15B-5
	No Change	
	15B.2.3 Validation of Removal Mechanisms	15B-5
	No Change	
	15B.2.4 Parameters and Assumptions for Calculating Aerosol Removal Coefficients	15B-5
	Parameters change	
	15B.2.5 Aerosol Removal Coefficients	15B-7
	Timings change	
15B.3	References	15B-7
	No Change	
CHAPTER 16	TECHNICAL SPECIFICATIONS	
16.1	TECHNICAL SPECIFICATIONS	16.1-1
16.1.1	Introduction to Technical Specifications	16.1-1
	AP600 to AP1000	
1.0	Use and Application	1.1-1
	Power level increased	
2.0	Safety Limits (SLs)	2.0-1
	No Change	
3.0	Limiting Conditions for Operation (LCO) Applicability	3.0-1
	No Change	
3.0	Surveillance Requirement (SR) Applicability	3.0-4
	No Change	
3.1	Reactivity Control Systems	3.1-1
	No Change	
3.2	Power Distribution Limits	3.2-1
	No Change	
3.3	Instrumentation	3.3-1
	No Text Change	
	Some trip setpoints may change	
3.4	Reactor Coolant System (RCS)	3.4-1

TIER 2 MASTER TABLE OF CONTENTS (Cont.)

Section	Title	Page
	No Text Change	
	Some limits will change	
3.5	Passive Core Cooling System (PXS)	3.5-1
	No Change	
3.6	Containment Systems	3.6-1
	No Change	
3.7	Plant Systems	3.7-1
	No Text Change	
	Some values may change	
3.8	Electrical Power Systems	3.8-1
	No Change	
3.9	Refueling 0perations	3.9-1
	No Change	
4.0	Design Features	4.0-1
	AP600 to AP1000	
	Description of core revised	
5.0	Administrative Controls	5.0-1
	No Change	
B 2.0	Safety Limits (SLs)	B 2.0-1
	No Change	
B 3.0	Limiting Conditions for Operation (LCO) Applicability	B 3.0-1
	No Change	
B 3.0	Surveillance Requirement (SR) Applicability	B 3.0-12
	AP600 to AP1000	
	Some values will change	
16.2	Design Reliability Assurance Program	16.2-1
	AP600 to AP1000	
16.3	Investment Protection	16.3-1
16.3.1	Investment Protection Short Term Availability Controls	16.3-1
	AP600 to AP1000	
	Some setpoint and surveillance values will change	
16.3.2	Combined License Information	16.3-2
	AP600 to AP1000	
CHAPTER 17	QUALITY ASSURANCE	17-1
17.1	Quality Assurance During the Design and Construction Phases	17-1
	No Change	
17.2	Quality Assurance During the Operations Phase	17-1
	No Change	
17.3	Quality Assurance During Design, Procurement, Fabrication, Inspection and/or Testing of Nuclear Power Plant Items and Services	17-1

TIER 2 MASTER TABLE OF CONTENTS (Cont.)

Section	Title	Page
	AP600 to AP1000	
17.4	Design Reliability Assurance Program	17-2
	17.4.1 Introduction	17-2
	AP600 to AP1000	
	17.4.2 Scope	17-2
	AP600 to AP1000	
	17.4.3 Design Considerations	17-2
	No Change	
	17.4.4 Relationship to Other Administrative Programs	17-3
	No Change	
	17.4.5 The AP600 Design Organization	17-3
	AP600 to AP1000	
	17.4.6 Objective	17-4
	AP600 to AP1000	
	17.4.7 D-RAP, Phase I	17-5
	AP600 to AP1000	
	17.4.8 Glossary of Terms	17-10
	No Change	
17.5	Combined License Information Items	17-10
	No Change	
17.6	References	17-11
	No Change	
CHAPTER 18	HUMAN FACTORS ENGINEERING	18.1-1
18.1	Overview	18.1-1
	AP600 to AP1000	
	18.1.1 References	18.1-3
18.2	Human Factors Engineering Program Management	18.2-1
	AP600 to AP1000	
	18.2.1 Human Factors Engineering Program Goals	18.2-1
	AP600 to AP1000	
	18.2.2 Human System Interfaces Design Team and Organization	18.2-4
	AP600 to AP1000	
	18.2.3 Human Factors Engineering Processes and Procedures	18.2-12
	AP600 to AP1000	
	18.2.4 Human Factors Engineering Issues Tracking	18.2-17
	AP600 to AP1000	
	18.2.5 Human Factors Engineering Technical Program and Milestones	18.2.18
	AP600 to AP1000	
	18.2.6 Combined License Information	18.2-19

TIER 2 MASTER TABLE OF CONTENTS (Cont.)

Section	Title	Page
	AP600 to AP1000	
	18.2.7 References	18.2-19
	No Change	
18.3	Operating Experience Review	18.3-1
	AP600 to AP1000	
	18.3.1 Combined License Information	18.3-1
	No Change	
	18.3.2 References	18.3-1
	No Change	
18.4	Functional Requirements Analysis and Allocation	18.4-1
	AP600 to AP1000	
	18.4.1 Combined License Information	18.4-2
	No Change	
	18.4.2 References	18.4-2
	No Change	
18.5	AP600 Task Analysis Implementation Plan	18.5-1
	AP600 to AP1000	
	18.5.1 Task Analysis Scope	18.5-1
	AP600 to AP1000	
	18.5.2 Task Analysis Implementation Plan	18.5-2
	AP600 to AP1000	
	18.5.3 Job Design Factors	18.5-5
	AP600 to AP1000	
	18.5.4 Combined License Information Item	18.5-5
	AP600 to AP1000	
	18.5.5 References	18.5-5
	No Change	
18.6	Staffing	18.6-1
	AP600 to AP1000	
	18.6.1 Combined License Information Item	18.6-1
	AP600 to AP1000	
	18.6.2 References	18.6-1
	No Change	
18.7	Integration of Human Reliability Analysis with Human Factors Engineering	18.7-1
	AP600 to AP1000	
	18.7.1 Combined License Information	18.7-1
	AP600 to AP1000	
	18.7.2 References	18.7-1
	No Change	
18.8	Human System Interface Design	18.8-1

TIER 2 MASTER TABLE OF CONTENTS (Cont.)

Section	Title	Page
	AP600 to AP1000	
	18.8.1 Implementation Plan for the Human System Interface Design	18.8-3
	AP600 to AP1000	
	18.8.2 Safety Parameter Display System (SPDS)	18.8-12
	AP600 to AP1000	
	18.8.3 Operation and Control Centers System	18.8-16
	AP600 to AP1000	
	18.8.4 Human Factors Design for the Non-Human-System Interface Portion of the Plant	18.8-22
	AP600 to AP1000	
	18.8.5 Combined License Information	18.8-25
	AP600 to AP1000	
	18.8.6 References	18.8-25
	No Change	
18.9	Procedure Development	18.9-1
	No Change	
	18.9.1 Combined License Information	18.9-1
	No Change	
	18.9.2 References	18.9-1
	No Change	
18.10	Training Program Development	18.10-1
	No Change	
	18.10.1 Combined License Information	18.10-1
	No Change	
	18.10.2 References	18.10-1
	No Change	
18.11	Human System Interface Design Test Program	18.11-1
	AP600 to AP1000	
	18.11.1 Combined License Information	18.11-2
	AP600 to AP1000	
	18.11.2 References	18.11-2
	No Change	
18.12	Inventory	18.12-1
	AP600 to AP1000	
	18.12.1 Inventory of Displays, Alarms, and Controls	18.12-1
	AP600 to AP1000	
	18.12.2 Minimum Inventory of Main Control Room Fixed Displays, Alarms, and Controls	18.12-1
	AP600 to AP1000	
	18.12.3 Remote Shutdown Workstation Displays, Alarms, and Controls	18.12-7

TIER 2 MASTER TABLE OF CONTENTS (Cont.)

Section	Title	Page
	No Change	
18.12.4	Combined License Information	18.12-8
	No Change	
18.12.5	References	18.12-8
	No Change	

NRC FORM **8A**
(7-94)
NRCMD 3.57

CONCURRENCE AND SIGNATURE TAB

USE THIS SIDE OF THE SHEET TO PRECEDE THE CONCURRENCE WHEN ASSEMBLING CORRESPONDENCE

(USE REVERSE SIDE FOR SIGNATURE TAB)

NRC FORM **8A**
(7-94)
NRCMD 3.57

CONCURRENCE AND SIGNATURE TAB

USE THIS SIDE OF THE SHEET TO PRECEDE THE SIGNATURE PAGE WHEN ASSEMBLING CORRESPONDENCE

(USE REVERSE SIDE FOR CONCURRENCE TAB)

May 3, 2000

APPLICANT: Westinghouse Electric Company

FACILITY: AP1000 Standard Plant Design

SUBJECT: MEETING SUMMARY ON AP1000 DESIGN

The subject meeting was held on April 27, 2000, at the headquarters of the U.S. Nuclear Regulatory Commission (NRC) between representatives of Westinghouse and the NRC staff. Enclosure 1 is a list of meeting attendees and Enclosure 2 is the meeting agenda. Enclosures 3, 4, and 5 are the handouts provided by Westinghouse during the meeting.

Westinghouse requested this meeting with the staff to explain why they are increasing the power rating of the AP600 design to 1000 MWe and to request NRC feedback on the scope and cost for a design certification review of the AP1000 design. Westinghouse's proposal is summarized in the "AP1000 Overview" handout (Enclosure 3) and details of the changes to the AP600 design are described in the "AP1000 Detailed Summary" handout (Enclosure 4). Westinghouse's goal is to minimize the changes to the AP600 design and retain the objectives and design detail, licensing basis, and risk basis of the AP600 design. By achieving these goals, Westinghouse believes that the NRC can limit the scope of the design certification review of the AP1000 design and thereby minimize the review costs. Westinghouse also provided a copy of the "Tier 2 Master Table of Contents" (Enclosure 5) from the AP600 design control document (DCD) that indicates the portions of the DCD that will be changed for the AP1000 design.

Mr. Collins (Director, NRR) instructed Westinghouse to send the NRC a letter that sets forth its request for the AP1000 review. Mr. Collins stated that the NRC would use a three-phase approach in response to Westinghouse's request for feedback: (1) scoping, (2) feasibility study, and (3) actual review of design certification application. The purpose of the scoping phase would be to identify the assumptions, questions, and review guidance that the NRC staff would evaluate during the feasibility study and to estimate the NRC resources that would be needed to perform the feasibility review. The staff would then provide a resource estimate to Westinghouse and get their approval to proceed. The purpose of the feasibility study would be to determine if the NRC staff agreed with Westinghouse's assumptions and guidelines for performing the AP1000 review. Westinghouse agreed with this approach.

/RA/

Jerry N. Wilson, Senior Policy Analyst
License Renewal and Standardization Branch
Division of Regulatory Improvement Programs
Office of Nuclear Reactor Regulation

Project No. 694

Enclosures: As stated

cc w/o encls: See next page

DISTRIBUTION: See attached list
DOCUMENT NAME: G:\RLSB\WILSON\mtg-42700.WPD

OFFICE	LA:DRIP	SPA:RLSB:DRIP	BC:RLSB:DRIP
NAME	EHylton See previous concurrence	JNWilson	CGrimes
DATE	05/ 2 /00	05/ 2 /00	05/ 3 /00

OFFICIAL RECORD COPY

APPLICANT: Westinghouse Electric Company

FACILITY: AP1000 Standard Plant Design

SUBJECT: MEETING SUMMARY ON AP1000 DESIGN

The subject meeting was held on April 27, 2000, at the headquarters of the U.S. Nuclear Regulatory Commission (NRC) between representatives of Westinghouse and the NRC staff. Enclosure 1 is a list of meeting attendees and Enclosure 2 is the meeting agenda. Enclosures 3, 4, and 5 are the handouts provided by Westinghouse during the meeting.

Westinghouse requested this meeting with the staff to explain why they are increasing the power rating of the AP600 design to 1000 MWe and to request NRC feedback on the scope and cost for a design certification review of the AP1000 design. Westinghouse's proposal is summarized in the "AP1000 Overview" handout (Enclosure 3) and details of the changes to the AP600 design are described in the "AP1000 Detailed Summary" handout (Enclosure 4). Westinghouse's goal is to minimize the changes to the AP600 design and retain the objectives and design detail, licensing basis, and risk basis of the AP600 design. By achieving these goals, Westinghouse believes that the NRC can limit the scope of the design certification review of the AP1000 design and thereby minimize the review costs. Westinghouse also provide a copy of the "Tier 2 Master Table of Contents" (Enclosure 5) from the AP600 design control document (DCD) that indicates the portions of the DCD that will be changed for the AP1000 design.

Mr. Collins (Director, NRR) instructed Westinghouse to send the NRC a letter that sets forth its request for the AP1000 review. Mr. Collins stated that the NRC would use a three-phase approach in response to Westinghouse's request for feedback: (1) scoping, (2) feasibility study, and (3) actual review of design certification application. The purpose of the scoping phase would be to identify the assumptions, questions, and review guidance that the NRC staff would evaluate during the feasibility study and to estimate the NRC resources that would be needed to perform the feasibility review. The staff would then provide a resource estimate to Westinghouse and get their approval to proceed. The purpose of the feasibility study would be to determine if the NRC staff agreed with Westinghouse's assumptions and guidelines for performing the AP1000 review. Westinghouse agreed with this approach.

Jerry N. Wilson, Senior Policy Analyst
License Renewal and Standardization Branch
Division of Regulatory Improvement Programs
Office of Nuclear Reactor Regulation

Project No. 694

Enclosures: As stated

cc w/o encls: See next page

DISTRIBUTION: See attached list
DOCUMENT NAME: G:\RLSB\WILSON\mtg-42700.WPD

OFFICE	LA:DRIP	SPA:RLSB:DRIP	BC:RLSB:DRIP
NAME	EHilton	JNWilson	CGrimes
DATE	05/2/00	05/ /00	05/ /00

OFFICIAL RECORD COPY

NRC FORM 8C
(7-94)
NRCMD 3.57

COVER SHEET FOR CORRESPONDENCE

USE THIS COVER SHEET TO PROTECT ORIGINALS OF MULTI-PAGE CORRESPONDENCE