Attachment 2

Off-Site Dose Calculation Procedure (ODCP) (CAP A-8 Revision 23)

TITLE: OFF-SITE DOSE CALCULATIONS

4/9/99
EFFECTIVE DATE

PROCEDURE CLASSIFICATION: QUALITY RELATED

TABLE OF CONTENTS

SECTION PAGE

SCOPE 2
DISCUSSION 3
RESPONSIBILITIES 3
PREREQUISITES 3
PRECAUTIONS 3
INSTRUCTIONS 4
Liquid Effluents 4
Liquid Effluents - Dose Calculation 4
10 CFR 20, Appendix B, Table 2, Column 2, Effluent (liquid) Concentration Limit (ECL) Calculation 6
Liquid Effluent Radiation Monitor Set Point Methodology 7
Dose Projection (for Liquid Effluents) 13
Liquid Limiting Flow Rate Methodology - ECL Based 15
Liquid Limiting Flow Rates - LLD Based 16
Gaseous Effluents 18
Plant Vent Noble Gas Monitor - RE-14 HASP 21
Containment Purge - RE-44 HASP 28
Dose To Critical Receptor Due To Radioiodines, Tritium and Particulates Released in Gaseous Effluents 34
40 CFR 190 Dose Calculations 42
ACCEPTANCE CRITERIA 47
REFERENCES 47
RECORDS 47
APPENDICES 48
ATTACHMENTS 48
SPONSOR 48

Table 6.1 - Typical Liquid Effluent Discharge Pathway Allocation Factors 8
Table 6.2 - Typical Gaseous Effluent Discharge Pathway Allocation Factors 20
Table 6.3 - Expected On-Site Distance and Visitation Times for Members of the Public 46
Figure 6.1 - Liquid Discharges (LRW) Monitored for Radioactivity 49
Figure 6.2 - Gaseous Discharges (GRW) Monitored for Radioactivity 50

1. SCOPE

This procedure describes the methodology for the following:

Effluent Type	RECP or Tech Spec	RECP or Tech Spec Surveillance Requirement	Implements
Liquids	6.1.1.1 (RECP) 6.1.3.1 (RECP)	Determination of alarm/trip setpoints for RE-18, RE-23, and RE-3	10 CFR 20 App. B Table 2, Col. 2
Gases	6.1.2.1 (RECP) 6.1.6.1 (RECP)	Determination of alarm/trip setpoints for RE-22, RE-14, and RE-14R	NUREG 0133
Liquids	6.1.3.2 (RECP) 6.1.3.3 (RECP)	Prerelease analyses of effluents Postrelease analysis of effluents	10 CFR 20 App. B Table 2, Col. 2
Liquids	6.1.4.2 (RECP)	Dose calculations	10 CFR 50 App. I
Liquids	6.1.5.2 (RECP)	Dose projections	10 CFR 50 App. I
Gases	6.1.6.2	Dose Rate calculations, Noble Gases, Total Body and Skin	NUREG 0133
Gases	6.1.6.3	Dose Rate calculations, Iodines, Particulates and Radionuclides other than Noble Gases, per organ, per age group	NUREG 0133
Gases	6.1.7.2 (RECP)	Noble Gas Air Dose Calculations	10 CFR 50 App. I
Gases	6.1.8.2 (RECP)	Iodines, Particulates, and Radionuclides other than Noble Gases Organ Dose Calculations per age group	10 CFR 50 App. I
Gases	6.1.9.2 (RECP)	Noble Gases, Iodines, Particulates, and Radionuclides other than Noble Gases, Dose Projection	10 CFR 50 App. I
Liquids and Gases	6.1.10.2 (RECP) 4.4.2.b.1 (RECP)	Cumulative Dose from: Liquids, Noble Gases, Iodines, Particulates, and Radionuclides other than Noble Gases per age group, per organ	40 CFR 190
Direct Radiation	6.1.10.3 (RECP)	Direct Radiation Dose Rate and Dose Calculations to unrestricted areas due to plant and high radwaste storage sky-shine	40 CFR 190

The calculational methodology for doses are based on models and data that make it unlikely to substantially underestimate the actual exposure of an individual through any of the appropriate pathways. Tables containing the values for the various parameters used in these expressions are also included.

2. DISCUSSION

This procedure is used in support of the Radiological Monitoring and Controls Program (RMCP), and Radioactive Effluent Controls Program (RECP), and the portion that deals with routine radioactive liquid and gaseous releases to the unrestricted area. Limits are based on the dose commitment to a member of the general public related to the release of radionuclides through either direct or indirect exposure (e.g., submersion in a cloud of radioactive Noble Gases, radionuclides deposited on the ground, direct radiation from radionuclides stored on-site, inhalation of radionuclides or ingestion of radionuclides via a food pathway such as milk, meat, vegetable or fish, etc.).

Further, the conduct of the Environmental Radiological Monitoring Procedure (ERMP) is found in RP1.ID11.

3. RESPONSIBILITIES

3.1 The Director, Chemistry is the overseeing authority of responsibility for ensuring that the off-site dose calculational procedure (ODCP) meets all RECP and Tech Spec requirements with regards to calculated doses delivered by the plant to the unrestricted area surrounding the site.

3.2 The Senior Radiochemistry Engineer assumes the overall responsibility for ensuring that this procedure's program is followed and implemented where appropriate, especially in regards to RECP or Tech Spec requirements.

3.3 The Radiochemistry Effluents Engineer has the responsibility of correct and timely implementation of all the procedure's calculational methodology, where appropriate, for each radioactive effluent released. Furthermore this engineer is responsible for: reviewing the results; cross (spot) checking the calculations; and maintaining an updated archive of post release calculated doses for annual report purposes.

3.4 The Senior Engineer Tech Maintenance Computer Group assures that any supporting computer software is maintained current and compatible with the procedure's calculational methodology and that the computer hardware is maintained operable at all times.

3.5 The Radiochemistry staff engineer provides an oversight of the effluents program's ODCP to: confirm compliance with RECP or Tech Specs; provide technical support; recommend or design improvements to the dose calculational methodology and the effluent program control; and investigate long-term planning toward effluent related activities and their associated dose calculations.

3.6 Responsibilities as described in CY1, " Chemistry and Radiochemistry," and CY1.DC1, "Analytical Data Processing Responsibilities," apply.

4. PREREQUISITES

Not Applicable

5. PRECAUTIONS

Not Applicable

6. INSTRUCTIONS

6.1 Liquid Effluents

6.1.1 Liquid Effluents - Dose Calculation

The dose contributions to the total body and each individual organ (bone, liver, thyroid, kidney, lung and GI-LLI) of the maximum exposed individual (adult) due to consumption of saltwater fish and saltwater invertebrate is calculated for all radionuclides identified in liquid effluents released to unrestricted areas using the following expression:

$$D_o = F_\ell \, \Delta t \sum_i A_{io} C_i \, e^{-\lambda_i t_m} \qquad (1)$$

Where:

D_o = The dose commitment to organ, o, in mrem.

F_ℓ = Near field average dilution factor during the period of the release. It is defined as:

$$F_\ell = \frac{\text{Waste Flow}}{\text{Dilution Flow} \times Z} \qquad (2)$$

Where:

Z = Z is the site specific factor for the mixing effect of the discharge structure. Specifically, it is the credit taken for dilution which occurs between the discharge structure and the body of water which contaminates fish or invertebrates in the liquid ingestion pathway. For DCPP Z = 5.

Δt = The time period for the release in hours.

A_{io} = The site specific ingestion dose commitment factor to organ, o, due to radionuclide, i, in mrem/hr per µCi/ml as defined by Equation 3.

C_i = Concentration of radionuclide, i, in the undiluted liquid effluent, in µCi/ml.

λ_i = Decay constant of radionuclide, i.

t_m = Time interval between end of sampling and midpoint of release.

The site specific ingestion dose commitment factor, A_{io}, is defined as:

$$A_{io} = k_o \left(U_F BF_i + U_I BI_i\right) DF_i \qquad (3)$$

Where:

k_o = Units conversion factor of 1.14×10^5 in units of $\rho Ci/\mu Ci \times ml/l \times yr/hr$.

U_F = Saltwater fish consumption rate in kilograms of fish per year. DCPP value for this parameter is 21 kg/yr and is taken from NUREG 0133, Section 4.3.1.

BF_i = Saltwater bioaccumulation factor for nuclide, i, in fish flesh in units of $\rho Ci/Kg$ per $\rho Ci/l$. Values for BF_i are taken from Table A-1 of Reg. Guide 1.109.

U_I = Saltwater invertebrate consumption rate in kilograms per years. DCPP value for this parameter is 5 kg/yr and is taken from NUREG 0133, Section 4.3.1.

BI_i = Saltwater bioaccumulation factor for nuclide, i, in invertebrate flesh in units of $\rho Ci/Kg$ per $\rho Ci/l$. Values for BI_i are taken from Table A-1 of Reg. Guide 1.109.

DF_i = Adult ingestion dose conversion factor for nuclide, i, in mrem per pCi ingested, from Table E-11 of Regulatory Guide 1.109, with the following exceptions: H-3, Br-82, Sb-124 and Sb-125 ingestion dose conversion factors are taken from NUREG/CR-4013. As-76, Sn-113, Sn-117m and Sb-122 ingestion dose conversion factors were calculated by ORNL using ICRP-2 methodology.

The site specific values for A_{io} are listed in Table 10.1.

Units 1 and 2 share a common liquid radwaste (LRW) treatment system. The effluent doses due to releases discharged via the common LRW are apportioned between the units with 50% credited to Unit 1 and 50% credited to Unit 2.

6.1.2 10 CFR 20, Appendix B, Table 2, Column 2, Effluent (liquid) Concentration Limit (ECL) Calculation

a. The ECL for the identified mixture of radionuclides in the "j^{th}" batch of liquids is calculated as follows:

$$ECL_j = \frac{\sum_{i=1}^{n} C_{ij}}{\sum_{i=1}^{n} \frac{C_{ij}}{ECL_{ij}}} \qquad (4)$$

Where:

ECL_j = The unrestricted area total undiluted ECL for the "j^{th}" particular mixture of identified radionuclides, in µCi/ml.

C_{ij} = The concentration of radionuclide "i," in µCi/ml for the "j^{th}" mixture.

ECL_{ij} = The ECL in unrestricted area water for radionuclide "i," in general, in µCi/ml (from 10 CFR 20, Appendix B, Table 2, Column 2).

b. The overall ECL for simultaneous discharges is given by Equation 5.

$$ECL_{overall} = \frac{\sum_{j=1}^{n} \Phi_j C_j}{\sum_{j=1}^{n} \frac{\Phi_j C_j}{ECL_j}} \quad (5)$$

Where:

$ECL_{overall}$ = The unrestricted area ECL for the current radionuclide mixture for concurrent "j" discharges (in µCi/ml).

C_j = The total activity concentration for the "j^{th}" individual stream in µCi/ml.

ECL_j = The total ECL for the "j^{th}" individual mixture (or stream) determined as defined in Equation 4, in µCi/ml.

Φ_j = The ratio of an individual discharge "j^{th}" pathway flowrate to the sum total of all individual undiluted pathway flowrates as defined by:

$$\Phi_j = \frac{f_j}{\sum_j f_j} \quad (6)$$

Where:

f_j = Undiluted effluent flowrate for pathway, "j".

6.1.3 Liquid Effluent Radiation Monitor Set Point Methodology

a. Introduction

The DCPP radiological effluent controls program requires that the liquid effluent monitors be operable with their alarm/trip set points set to ensure that the effluent concentration limits of 10 CFR 20 are not exceeded.

The alarm/trip set point for the liquid effluent radiation monitors is derived from the concentration limit set forth in Appendix B, Table 2, Column 2 of 10 CFR 20.1001-2404.

The alarm/trip set points are applied at the unrestricted area boundary. The set points take into account appropriate factors for dilution, dispersion, or decay of radioactive materials that may occur between the point of discharge and the unrestricted area boundary.

b. Allocation and Safety Factors

The limits of RCMP 6.1.3.1 are site limits which require that the set point methodology must ensure simultaneous releases do not exceed the liquid effluent concentration limits of 10 CFR 20 in the unrestricted area. The DCPP High Alarm Set Point (HASP) methodology makes use of an Allocation Factor (AF) to limit the effluent concentrations from simultaneous liquid discharges. The Allocation Factors can be adjusted based upon operational requirements with the restriction that the sum of the Allocation Factors must be less than or equal to 1.

Typical Allocation Factors are shown Table 6. 1.

Table 6. 1

Typical Liquid Effluent Discharge Pathway Allocation Factors

Discharge Pathway	Rad Monitor	Allocation Factor (AF)
Oily Water Separator	RE-3	0.01
Liquid Radwaste System	RE-18	0.90
Steam Generator Blow Down (Unit 1)	RE-23 (U1)	0.04
Steam Generator Blow Down (Unit 2)	RE-23 (U2)	0.04
Miscellaneous	none	0.01

An additional level of conservatism in the HASP methodology is implemented by the use of a Safety Factor (SF). The Safety Factor is defined as 0.9 and provides for a High Alarm Set Point at 90% of the 10 CFR 20 concentration limits.

c. Tritium Correction Factor

As result of an aggressive liquid radwaste treatment program, the liquid effluents at DCPP typically contain very low levels of gamma emitters. In order to reduce the over all volume of liquid waste discharged, DCPP also recycles waste water. This recycling results in higher tritium concentration in liquid effluents when compared with the low gamma emitter concentrations. As a result, standard HASP methodology results in very low set points. In some cases the calculated set points are barely above the monitor background.

The liquid HASP methodology used by DCPP uses a Tritium Correction Factor (TCF) which assumes a constant, but conservative tritium concentration in the liquid effluent. This results in an operationally reasonable set point while ensuring that the liquid effluent concentrations released to the unrestricted areas do not exceed the limits of 10 CFR 20.

The Tritium Correction Factor is defined as shown in Equation 7.

$$TCF = \left[1 - \left(\frac{C_{H3} \cdot ECL_{H3}}{F\ f}\right)\right] \quad (7)$$

Where:

ECL_{H3}	=	effluent concentration limit of tritium
C_{H3}	=	concentration of tritium in the release mix, pre-dilution (μCi/ml)
F	=	conservative dilution flow rate (gpm)
f	=	conservative undiluted effluent flow rate (gpm)

The concentration of tritium, C_{H3}, is conservatively estimated.

d. Liquid Effluent Radiation Monitor Set Point Calculations

The High Alarm Set Point (HASP) are calculated to ensure that the liquid effluent concentration limits of 10 CFR 20 are not exceeded. The set points represent the maximum operational set point. The actual set point used by operations will be equal to or less than the actual value as determined by the HASP methodology described in this section.

1. Set Point Methodology for RE-3 HASP: Oily Water Separator

Under normal conditions, the Oily Water Separator stream does not contain any radioactive material. Only in the event that there is primary to secondary leakage does this become a potential liquid effluent discharge point. In order to insure that no unplanned or unmonitored releases take place by way of the Oily Water Separator, RE-3 serves to monitor the discharge even when no activity has been identified in the effluent. When no significant primary to secondary leakage is taking place or when no activity has been identified in the Oily Water Separator, the High Alarm Set Point for RE-3 is calculated as shown in Equation 8.

$$HASP_{RE-3} = 3 \times BKGD_{RE-3} \quad (8)$$

In the event that primary to secondary leakage results in activity being detected in the Oily Water Separator, Equation 9 will be used to calculate a High Alarm Set Point value. The greater HASP value as determined by Equation 8 or Equation 9 will be used.

$$HASP_{RE-3} = BKGD_{RE-3} + (AF)(SF) \times \sum_{\gamma} k_{\gamma} C_{\gamma} \left[\frac{F\ f}{\sum_{i \neq H3} C_i / ECL_i} \right] \times TCF \quad (9)$$

Where:

$HASP_{RE-3}$ = high alarm setpoint for RE-3 (cpm)

$BKGD_{RE-3}$ = background reading for RE-3 (cpm)

(AF) = allocation factor for the oily water separator effluent system from Table 6. 1 (0.01)

(SF) = safety factor for RE-3 (0.9)

k_{γ} = monitor response factor (cpm/μCi/ml)

C_{γ} = concentration of gamma emitting isotopes in the release mix, pre-dilution (μCi/ml)

F = dilution flow rate (gpm)

f = undiluted effluent flow rate (gpm)

C_i = concentration of isotope "i," in the release mix, pre-dilution (μCi/ml)

ECL_i = effluent concentration limit of isotope "i"

TCF = tritium correction factor as defined by Equation 7.

2. Set Point Methodology for RE-18 HASP: Liquid Radwaste System

The High Alarm Set Point for the RE-18 Liquid Radwaste System liquid effluent radiation monitor is calculated as shown in Equation 10.

$$HASP_{RE-18} = BKGD_{RE-18} + (AF)(SF) \times \sum_{\gamma} k_{\gamma} C_{\gamma} \left[\frac{F \cdot f}{\sum_{i \neq H3} C_i \cdot ECL_i} \right] \times TCF \quad (10)$$

Where:

$HASP_{RE-18}$ = high alarm setpoint for RE-18 (cpm)

$BKGD_{RE-18}$ = background reading for RE-18 (cpm)

(AF) = allocation factor for the liquid radwaste effluent system from Table 6. 1 (0.9)

(SF) = safety factor for RE-18 (0.9)

k_{γ} = monitor response factor (cpm/μCi/ml)

C_{γ} = concentration of gamma emitting isotopes in the release mix, pre-dilution (μCi/ml)

F = dilution flow rate (gpm)

f = undiluted effluent flow rate (gpm)

C_i = concentration of isotope "i," in the release mix, pre-dilution (μCi/ml)

ECL_i = effluent concentration limit of isotope "I"

TCF = tritium correction factor as defined by Equation 7.

3. Set Point Methodology for RE-23 HASP: Steam Generator Blowdown Tank

The High Alarm Set Point for the RE-23, Steam Generator Blowdown Tank liquid effluent radiation monitor, is calculated as shown in Equation 11.

$$HASP_{RE-23} = BKGD_{RE-23} + (AF)(SF) \times \sum_{\gamma} k_{\gamma} C_{\gamma} \left[\frac{F/f}{\sum_{i \neq H3} C_i / ECL_i} \right] \times TCF \quad (11)$$

Where:

$HASP_{RE-23}$ = high alarm setpoint for RE-23 (cpm)

$BKGD_{RE-23}$ = background reading for RE-23 (cpm)

(AF) = allocation factor for the steam generator blowdown effluent system for each unit from Table 6. 1 (0.04)

(SF) = safety factor for RE-23 (0.9)

k_{γ} = monitor response factor (cpm/μCi/ml)

C_{γ} = concentration of gamma emitting isotopes in the release mix, pre-dilution (μCi/ml)

F = dilution flow rate (gpm)

f = undiluted effluent flow rate (gpm)

C_i = concentration of isotope "i," in the release mix, pre-dilution (μCi/ml)

ECL_i = effluent concentration limit of isotope "i"

TCF = tritium correction factor as defined by Equation 7.

6.1.4 Dose Projection (for Liquid Effluents)

The projected dose contributions from each reactor unit due to liquid effluents for the current calendar month, quarter and current calendar year must be determined in accordance with the methodology and parameters in the ODCP at least every 31 days.

The purpose of this is to determine if appropriate treatment of liquid radioactive materials in relation to maintaining releases "as low as reasonably achievable," is necessary.

Projections will be made, at least by the end of each month with attention to the frequency requirement contained in the radiological effluent controls program.

The projected dose from each reactor unit is given by:

$$D_P = D_{P,U} + \tfrac{1}{2} D_{P,Com} \qquad (12)$$

Where:

D_P = Projected Dose.

$D_{P,U}$ = Projected dose attributed to reactor unit, U.

$D_{P,Com}$ = Projected dose common to both reactor units.

The 31-day projected dose is calculated by Equation 13.

$$D_P^M = 31 \times \frac{D_A^{PM} + d_A^{CM} + d_P^{CB}}{(T + t)} \qquad (13)$$

Where:

D_P^M = Monthly Projected Dose

D_A^{PM} = Previous Month's Actual Dose

d_A^{CM} = Current Month Actual Dose to date

d_P^{CB} = Projected Dose from Current Batch Release

T = Number of days in the previous month

t = Number of days into the present month

Projected quarterly doses are determined by Equation 14.

$$D_P^{CQ} = d_A^{CQ} + (92 - t)\frac{D_A^{PQ} + d_A^{CQ} + d_P^{CB}}{(T + t)} \qquad (14)$$

Where:

D_P^{CQ}	=	Projected dose for the current calendar quarter.
d_A^{CQ}	=	Current quarter to date actual dose.
D_A^{PQ}	=	Previous quarter's actual dose.
d_P^{CB}	=	Projected dose as a result of the current batch release.
T	=	Number of days in the previous quarter.
t	=	Number of days into the present quarter.

Projected yearly doses are determined by Equation 15.

$$D_P^{CY} = d_A^{CY} + (366 - t)\frac{D_A^{PY} + d_A^{CY} + d_P^{CB}}{(T + t)} \qquad (15)$$

Where:

D_P^{CY}	=	Projected dose for the current calendar year.
d_A^{CY}	=	Current year to date actual dose.
D_A^{PY}	=	Previous year's actual dose.
d_P^{CB}	=	Projected dose as a result of the current batch release.
T	=	Number of days in the previous year.
t	=	Number of days into the present year.

6.1.5 Liquid Limiting Flow Rate Methodology - ECL Based

The maximum effluent flow rate through monitors RE-3, RE-18, and RE-23 as well as for releases from the Condensate Demineralizer Regenerate waste tank or miscellaneous release points is established in order to provide further control over the effluent releases. The release rate limit is determined by the effluent concentration and the 10 CFR 20 Effluent Concentration Limits (ELCs) as shown in Equation 16.

$$f = \frac{F(AF)(SF)(TCF)}{\sum_{i \neq H-3} \frac{C_i}{ECL_i}} \qquad (16)$$

Where:

f	=	Maximum operational undiluted liquid radwaste effluent discharge flow rate (gpm)
F	=	Expected dilution flow rate (gpm)
AF	=	allocation factor for the liquid radwaste effluent source from Table 6. 1.
SF	=	safety factor (0.9).
TCF	=	tritium correction factor as defined by Equation 7.
C_i	=	concentration of isotopes "i" in the release mix, pre-dilution (µCi/ml)
ECL_i	=	effluent concentration limit of isotope "i" (µCi/ml)

When the term $\sum_{i \neq H-3} \frac{C_i}{ECL_i} = 0$ then the Limiting Flow Rate is calculated by:

$$f = F(AF)(SF)(TCF) \qquad (17)$$

Where the terms are as previously defined.

6.1.6 Liquid Limiting Flow Rates - LLD Based

When there is no primary to secondary leakage, the Oily Water Separator and various miscellaneous release points are assumed to be uncontaminated. Furthermore, in order to establish practical operational flow rate limits for any sources when they are considered uncontaminated, Equation 18 is used. While no activity may be present, Equation 18 assumes a concentration equal to the Lower Limit of Detection for the nuclides listed in CY2.ID1, Appendix 6.1, Table 6.1.3-1.

$$f = \frac{F(AF)(SF)}{4.3} \qquad (18)$$

Where:

f = Maximum operational undiluted liquid radwaste effluent discharge flow rate (gpm)

F = Expected dilution flow rate (gpm)

AF = allocation factor for the liquid radwaste effluent source from Table 6. 1.

SF = safety factor (0.9).

4.3 = Total ECL fraction as given by:

$$\sum_i \frac{LLD_i}{ECL_i}$$

Where:

LLD_i = Lower limit of detection for isotope "i" from CY2.ID1, Appendix 6.1, Table 6.1.3-1. (µCi/ml)

ECL_i = effluent concentration limit of isotope "i" (µCi/ml)

6.1.7 Unplanned Liquid Releases

An unplanned release is an unexpected and potentially unmonitored release to the environment due to operational error or equipment malfunctions.

a. Unmonitored unplanned releases shall have a report written by the Radiochemistry Effluents Engineer describing the event with a calculation, if possible, of the percent of Tech Spec release rate limit. This will then be forwarded to PSRC for review and then forwarded to NSOC for review.

b. Monitored unplanned releases which exceed 1% of the RMCP release rate limit will also have a report written describing the event and must be forwarded to the PSRC for review, and then forwarded to NSOC for review.

c. Describe these unplanned releases in the Annual Radioactive Effluent Release Report. This report will also be forwarded to PSRC and NSOC for review.

6.2 Gaseous Effluents

The only significant path for gaseous radioactive releases to the environment during normal operations is via the plant vent. This source is used for calculating dose rates and real-time doses to the unrestricted area due to noble gases, vaporous radioiodines and airborne radio-particulates. The plant vent also has redundant monitoring for these types of gaseous releases.

Other paths such as the steam generator blowdown tank vent, the chemistry lab fume hood, the main condenser Nash vacuum pump discharge, hot machine shop vent, etc., are considered miscellaneous release sources. These miscellaneous release sources are not continuously monitored but can have dose rates and dose calculated for their path to the unrestricted area.

6.2.1 Meteorological Methodology

The equations for determining gaseous effluent concentration limits, high alarm setpoints, dose rates, and critical receptor doses make use of the historical average atmospheric conditions in accordance with methodologies of Regulatory Guides 1.109 and 1.111 and NUREGs 0133 and 0472. The historical average dispersion (χ/Q) and deposition (D/Q) values are derived from the methodology of Regulatory Guide 1.111 as implemented by NUREG 2019 (computer code XOQDOQ). The DCPP dispersion and deposition values are based on the latest five years of meteorological data and are updated when the value of χ/Q or D/Q changes by more than ten percent. The present values are listed in Table 10.2.

Long-term releases are characterized as those that are generally continuous and stable in release rate, such as normal ventilation systems effluents. Doses due to long-term releases are modeled using historical annual average dispersion and deposition values in accordance with the guidance of Regulatory Guide 1.109, Regulatory Guide 1.111, NUREG 0133 and NUREG 0472.

Short-term releases are defined as those which occur for a total of 500 hours or less in a calendar year but not more than 150 hours in any quarter. In accordance with NUREG 0133 and based upon an operational history that has demonstrated short term gaseous releases can be characterized as random in both time of day and duration, historical average atmospheric dispersion and deposition values are used to model doses due to short-term releases.

6.2.2 Gas Effluent Concentration Limits

a. Philosophy of Concentration Limits

The radiological effluent controls restrict at all times the dose rate due to radioactive materials released in gaseous effluents from the site to areas at or beyond the site boundary for noble gases to less than or equal to 500 mrem/yr to the total body and 3000 mrem/yr to the skin. For iodine-131, iodine-133, tritium and for all radionuclides in particulate form with half-lives greater than 8 days, the dose rate is limited to less than or equal to 1500 mrem/yr to any organ.

These dose rate limits act to restrict at all times the instantaneous concentrations of radionuclides in gaseous effluents at the site boundary.

1. Allocation and Safety Factors

The limits set forth by RCMP 6.1.6.1 are site limits which require that the set point methodology must ensure simultaneous releases do not exceed the off-site dose rate limits set forth by RCMP 6.1.6.1(a) and 6.1.6.1(b). The DCPP High Alarm Set Point methodology makes use of an Allocation Factor (AF) to limit the noble gas effluent dose rate from simultaneous atmospheric releases.

The Allocation Factors can be adjusted based upon operational requirements with the following restrictions:

The sum of the Allocation Factors for RE-14, the SGBD tank vents, and miscellaneous release points from both units must be less than or equal to 1.

The Allocation Factors for RE-22 (Waste Gas Decay Tanks) and RE-44 (Containment Purge) can also be adjusted based upon operational requirements with restriction that the sum of the Allocation Factors for RE-22 and RE-44 must be less than or equal to the Allocation Factor for RE-14

The Allocation Factors for RE-24 (Plant Vent Iodine Monitor) and RE-28 (Plant Vent Particulate Monitor) are set equal to the Allocation Factor for RE-14.

Typical Allocation Factors are shown in Table 6. 2.

Table 6. 2

Typical Gaseous Effluent Discharge Pathway Allocation Factors

Discharge Pathway	Rad Monitor	Allocation Factor (AF)
Plant Vent - NG Monitor	RE-14	0.48
Plant Vent Iodine Monitor	RE-24	0.48
Plant Vent Part Monitor	RE-28	0.48
Waste Gas Decay Tank	RE-22	0.10
Containment Purge	RE-44	0.38
SGBD Tank Vent		0.01
Miscellaneous		0.01

An additional level of conservatism in the HASP methodology is implemented by the use of a Safety Factor (SF). The Safety Factor is defined as 0.9 and provides for a High Alarm Set Point at 90% of the dose rate limits.

b. Gaseous Effluent Radiation Monitor Set Points

1. **PLANT VENT NOBLE GAS MONITOR - RE-14 HASP**

The Plant Vent effluent stream is monitored by rad monitor RE-14. RE-14 provides alarm function only.
The High Alarm Set Point methodology for RE-14 is given by Equation 19.

$$^{14Max}C_T(NG) = AF \times SF \times \frac{500}{472 \times F_{pv} \times \left(\overline{\chi/Q}\right)_{Max} \times 294} \qquad (19)$$

Where:

$^{14Max}C_T(NG)$ = the maximum allowable total concentration of noble gas in the plant vent, in µCi/cc

AF = the allocation factor for the plant vent for one unit from Table 6. 2 (0.48)

SF = a safety factor to ensure that dose rate limits of the radiological effluent controls are not exceeded (0.9)

500 = (mrem/yr) the site Total Body dose rate limit for instantaneous releases

472 = the conversion constant to cc/sec from cfm

F_{pv} = total flow rate in the plant vent, in cfm (maximum plant vent flow rate is 263,000 cfm)

$\left(\overline{\chi/Q}\right)_{Max}$ = the maximum historical site boundary dispersion factor, based on 5 year averages derived from the meteorological data base, from Table 10.2.

294 = the whole body dose factor (mrem/yr/µCi/m^3) for Xe-133 as presented in Table 10.3. (for the plant vent HASP, the release is assumed to be all Xe-133)

2. PLANT VENT NOBLE GAS MONITOR - RE-14 SCALING

In order to correlate the readings of RE-14 to noble gas concentration during periods between samplings, the concentration is scaled according to Equation 20.

$$C_T = \frac{CPM_T}{CPM_S} \times C_S \qquad (20)$$

Where:

CPM_T = RE-14 time weighted arithmetic mean (cpm).

CPM_S = RE-14 gross count rate at the time of sampling (cpm).

C_S = Concentration of noble gas corresponding to CPM_S, based upon noble gas grab sample (µCi/cc).

C_T = Scaled concentration of noble gas (µCi/cc).

3. PLANT VENT IODINE MONITOR - RE-24

The Plant Vent Iodine concentration is monitored by rad monitor RE-24. RE-24 provides alarm function only. The alarm setpoint methodology is based upon the assumption that RE-24 responds only to I-131. The methodology also presumes a release mixture based upon the RCS source term.

The High Alarm Set Point methodology of RE-24 is given by Equation 21.

$$^{24\,Max}C_T(\text{Iodine}) = SF \times AF \times f_{I\text{-}131} \frac{1500}{472 \times F_{pv} \times \left(\overline{\chi\ Q}\right)_{Max} \sum_i P_i^* f_i} \qquad (21)$$

Where:

$^{24\,Max}C_T$(Iodine) = the maximum allowable concentration of I-131 in the plant vent

AF = The allocation factor for the plant vent for one unit from Table 6. 2 (0.48)

SF = A safety factor to insure that the dose rate limits of the radiological effluent controls are not exceeded (0.9).

$f_{I\text{-}131}$ = fraction of the total non-noble gas concentration that is due to I-131. Defined as:

$$f_{I\text{-}131} = \frac{C_{I\text{-}131}}{\sum_i C_i} \qquad (22)$$

1500 = (mrem/yr) the site organ dose rate limit for radioiodines and for all radioactive materials in particulate form and radionuclides other than noble gases with half-lives greater than 8 days.

472 = the conversion constant to cc/sec from cfm

F_{pv} = total flowrate in the plant vent, in cfm (maximum plant vent flowrate is 263,000 cfm)

$\left(\overline{\chi/Q}\right)_{Max}$ = maximum historical site boundary dispersion factor, based on 5 year averages derived from the meteorological database, from Table 10.2.

P_i^w = Inhalation dose factor for nuclide "i" (mrem/yr/μCi/m^3) for child age group for worst case organ, from Table 10.4. Dose factors are based upon NUREG 0133 methodology. Inhalation dose conversion factors are taken from Reg. Guide 1.109, Rev 1, Table E-9, with the following exceptions: H-3, Sb-124 and Sb-125 inhalation dose conversion factors taken from NUREG/CR-4013.

f_i = fraction of total non-noble gas concentration (excluding tritium) that is due to nuclide, i, and defined as:

$$f_i = \frac{C_i}{\sum_i C_i} \qquad (23)$$

4. PLANT VENT PARTICULATE MONITOR - RE-28

The Plant Vent Particulate concentration is monitored by rad monitor RE-28. The alarm setpoint methodology is based upon the assumption of a 5% cross talk from the iodine channel. This is due to the retention of a small portion of iodine on the particulate filter. A release mixture based upon the RCS source term is also assumed.

The High Alarm Set Point methodology for RE-28 is given by Equation 24.

$$^{28Max}C_T(\text{Particulates}) = AF \times SF \times \left(0.05 \times \sum_{\text{Iodines}} f_{\text{Iodines}} + \sum_{\text{Particulates}} f_{\text{Particulates}}\right) \times \frac{1500}{472 \times F_{pv} \times \left(\overline{\chi/Q}\right)_{Max} \sum_i P_i^w f_i} \quad (24)$$

Where:

$^{28\,Max}C_T$(Particulate)	=	Maximum allowable particulate concentration in the plant vent
AF	=	The allocation factor for the plant vent for one unit from Table 6. 2 (0.48)
SF	=	A safety factor to insure that the dose rate limits of the radiological effluent controls are not exceeded (0.9).
0.05	=	Fraction of total iodine activity retained on particulate filter.
$f_{Iodines}$	=	Fraction of the total non-noble gas concentration that is due to iodines.
$f_{Particulates}$	=	Fraction of the total non-noble gas concentration that is due to particulates.
1500	=	(mrem/yr) the site organ dose rate limit for radioiodines and for all radioactive materials in particulate form and radionuclides other than noble gases with half-lives greater than 8 days.
472	=	Conversion constant to cc/sec from cfm
F_{pv}	=	Total flowrate in the plant vent, in cfm (maximum plant vent flowrate is 263,000 cfm)

$\left(\overline{\chi/Q}\right)_{Max}$ = Maximum historical site boundary dispersion factor, based on 5 year averages derived from the meteorological database, from Table 10.2

P_i^* = Inhalation dose factor for nuclide "i" (mrem/yr/μCi/m3) for child age group for worst case organ, from Table 10.4. Dose factors are based upon NUREG 0133 methodology. Inhalation dose conversion factors are taken from Reg. Guide 1.109, Rev 1, Table E-9, with the following exceptions: H-3, Sb-124 and Sb-125 inhalation dose conversion factors taken from NUREG/CR-4013.

f_i = Fraction of total non-noble gas concentration (excluding tritium) that is due to nuclide, i, as defined by Equation 23.

5. **WASTE GAS DECAY TANK MONITOR - RE-22 HASP**

Effluent releases from the Waste Gas Decay Tank are monitored by rad monitor RE-22. RE-22 provides alarm and automatic release termination functions.

The High Alarm Set Point methodology for RE-22 is given by Equation 25.

$$^{22Max}C_T(NG) = AF \times SF \times \frac{3000}{472 \times F_{gdt} \times \left(\overline{\chi/Q}\right)_{Max} \times 1.34 \times 10^5} \qquad (25)$$

Where:

$^{22Max}C_T(NG)$ = the maximum allowable total concentration of noble gas in the gas decay tank exhaust line, in μCi/cc

AF = the allocation factor for the waste gas decay tank for one unit from Table 6. 2 (0.10)

SF = safety factor to ensure that dose rate limits of the radiological effluent controls are not exceeded (0.9)

3000 = (mrem/yr) the site Skin dose rate limit for instantaneous releases

472 = the conversion constant to cc/sec from cfm

F_{gdt} = maximum flow rate for the gas decay tank system (31 cfm)

$\left(\overline{\chi/Q}\right)_{Max}$ = the maximum historical site boundary dispersion factor, based on 5 year averages derived from the meteorological data base from Table 10.2.

1.34×10^{3} = the skin dose factor for Kr-85 (mrem/yr/ $\mu Ci/m^3$, from Table 10.3.

6. CONTAINMENT PURGE - RE-44 HASP

The Containment Purge is monitored by rad monitor RE-44. RE-44 provides alarm and automatic release termination functions.

The HASP for RE-44 must limit the noble gas dose rate for skin and total body exposure. In order to address this, two set points are calculated. One set point is calculated based upon limiting the total body dose rate and the other limits the skin dose rate. The more limiting set point is used. The High Alarm Set Point methodology for RE-44 is given by Equations 26 and 27.

a) Limiting Concentration Based on Total Body Dose

$$^{44A/BMax}C_T(NG) = AF \times SF \times \frac{500}{472 \times F_{ct} \times \left(\overline{\chi/Q}\right)_{Max} \times \sum K_i f_i(NG)} \qquad (26)$$

Where:

$^{44A/BMax}C_T(NG)$ = the maximum allowable total concentration of noble gas in the containment purge exhaust line, in µCi/cc

AF = the allocation factor for the containment purge for one unit from Table 6. 2 (0.38)

SF = safety factor to ensure that dose rate limits of radiological effluent controls are not exceeded (0.9)

500 = (mrem/yr) the site Total Body dose rate limit for instantaneous releases

472 = the conversion constant to cc/sec from cfm

F_{ct} = maximum flow rate in the containment purge system (maximum containment purge flowrate is 55,000 cfm)

$\left(\overline{\chi/Q}\right)_{Max}$ = the maximum historical site boundary dispersion factor, based on 5 year averages derived from the meteorological data base averages, from Table 10.2.

K_i = whole body dose factor (mrem/yr/μCi/m^3) for isotope "i." Dose factors are presented in Table 10.3.

f_i = the fraction of the concentration of the individual noble gas radionuclide, "i," in the total mix of noble gas effluents in the containment purge line.

b) Limiting Concentration Based on Skin Dose

Skin dose should be calculated whenever an RCS sample contains a significant fraction of Kr-85.

The concentration limit calculated by this method should then be compared to the concentration limit calculated for total body dose. The smaller concentration should be selected as the limiting concentration for the HASP.

$$^{44A/BMax}C_T(NG) = AF \times SF \times \frac{3000}{472 \times F_{ct} \times \left(\overline{\chi/Q}\right)_{Max} \times \sum_i (L_i + 1.1 M_i)\, f_i(NG)} \qquad (27)$$

Where:

$^{44A/BMax}C_T(NG)$ = the maximum allowable total concentration of noble gas in the plant vent in μCi/cc

AF = the allocation factor for the containment purge for one unit from Table 6. 2 (0.38)

SF = safety factor to ensure that dose rate limits of the radiological effluent controls are not exceeded (0.9)

3000 = (mrem/yr) the site Total Body dose rate limit for instantaneous releases.

472 = the conversion constant to cc/sec from cfm

F_{ct} = total flow rate in the containment purge system, in cfm (maximum containment purge flow rate is 55,000 cfm)

$\left(\overline{\chi/Q}\right)_{Max}$ = the maximum historical site boundary dispersion factor, based on 5 year averages derived from the meteorological data base averages, from Table 10.2.

L_i = the skin dose factor (mrem/yr per $\mu Ci/m^3$) for isotope "i." Dose factors are presented in Table 10.3.

1.1 = Conversion factor mrem/mrad. Converts air dose to skin dose.

M_i = the beta dose factor (mrad/yr per $\mu Ci/m^3$) for isotope "i." Dose factors are presented in Table 10.3.

f_i = the fraction of the concentration of the individual noble gas radionuclide, "i," in the total mix of noble gas effluents in the containment purge line.

c. Mode 6 Particulate activity.

The HASP calculation specified in this section based upon Noble Gas effluent limitations conservatively bounds the Tech. Spec. requirement for particulate activity in Mode 6. The FSAR expected case accident for Mode 6 is a containment fuel handling accident which does not include a particulate release. Therefore, the HASP for RM-44 in this section conservatively satisfies the Tech. Spec. (Ref.: 8.15)

6.2.3 Gaseous Dose Rate Calculation Methodology

a. Total Body Noble Gas Dose Rate Methodology

The dose rate to the total body due to immersion in a cloud of noble gases is given by:

$$\left(\overline{\chi/Q}\right)_{Max} \sum_i K_i \dot{Q}_i \leq 500 \text{ mrem / year} \qquad (28)$$

Where:

$\dot{Q}_i$ = The release rate of radionuclide i in units of μCi/sec.

All other terms are as previously defined.

b. Skin Dose Rate Methodology

The dose rate to the skin due to immersion in a cloud of noble gases is given by:

$$\left(\overline{\chi/Q}\right)_{Max} \sum_i \left(L_i + 1.1 M_i\right) \dot{Q}_i \leq 3000 \text{ mrem / year} \qquad (29)$$

Where the terms are as previously defined.

c. Radioiodine, Tritium and Particulate Dose Rate Methodology

The dose rate to organ, o, due to radioiodines, tritium and particulates released in gaseous effluents is given by:

$$\left(\overline{\chi/Q}\right)_{\text{site}} \sum_{i} P_{io} \dot{Q}_{i} \leq 1500 \text{ mrem / year} \qquad \textbf{(30)}$$

Where:

P_{io} = $K'(BR)\,DFA_{io}$

and

K' = 10^6 ρCi/μCi

BR = The breathing rate of the a child age group in m^3/yr. The default value of 3700 m^3/yr is taken from Table E-5 of Reg. Guide 1.109.

DFA_i = The inhalation dose factor for organ o, for the child age group for radionuclide, i, from Table E-9 of Reg. Guide 1.109 in mrem/ρCi, with the following exceptions: H-3, Sb-124 and Sb-125 inhalation dose conversion factors taken from NUREG/CR4013.

All other terms are as previously defined.

Values for P_{io} are listed in Table 10.6.

6.2.4 Noble Gas Air Dose Calculation Methodology

a. Gamma Air Dose

The gamma air dose due to immersion in a cloud of noble gases is given by:

$$D_{a\gamma} = 3.17 \times 10^{-8} \left(\overline{\chi/Q}\right)_{Max} \sum_i M_i \tilde{Q}_i \qquad (31)$$

Where:

$D_{a\gamma}$ = Gamma air dose in mrad.

3.17×10^{-8} = Conversion constant yr/sec.

M_i = Gamma air dose factor for nuclide i, in mrad/yr per $\mu Ci/m^3$. Values are listed in Table 10.3.

$\tilde{Q}_i$ = Total release of noble gas radionuclide, i, in μCi.

All other terms are as previously defined.

b. Beta Air Dose

The beta air dose due to immersion in a cloud of noble gases is given by:

$$D_{a\beta} = 3.17 \times 10^{-8} \left(\overline{\chi/Q}\right)_{Max} \sum_i N_i \tilde{Q}_i \qquad (32)$$

Where:

$D_{a\beta}$ = Beta air dose in mrad.

N_i = Beta air dose factor for nuclide i, in mrad/yr per $\mu Ci/m^3$. Values are listed in Table 10.3.

All other terms are as previously defined.

6.2.5 Dose To Critical Receptor Due To Radioiodines, Tritium and Particulates Released in Gaseous Effluents

a. Calculation Methodology

The dose to an individual (critical receptor) due to radioiodines, tritium and particulates released in gaseous effluents with half-lives greater than 8 days is determined based upon the methodology described in NUREG 0133. This methodology makes use of the maximum individual concept described in Regulatory Guide 1.109. The maximum individual is characterized as maximum with regard to food consumption, occupancy, and other usage parameters. This concept therefore models those individuals within the local population with habits representing reasonable deviations from the average. In all physiological and metabolic respects, the maximum individual is assumed to have those characteristics that represent the average for the age group of interest.

The concept of critical receptor is introduced as a further refinement of the maximum individual. The critical receptor is defined as that individual that receives the largest dose based upon the combination of dose pathways that have been shown to actually exist. The critical receptor concept is applied at that location where the combination of dispersion (χ/Q), deposition (D/Q), existing pathways, occupancy time, receptor age group, and effluent source term indicates the maximum potential exposure. The inhalation and ground plane exposure pathways are considered to exist at all locations. The grass-cow-milk, grass-cow-meat, and vegetation pathways are considered based on their actual existence in the vicinity of the plant.

The dose pathways that have been shown to actually exist at DCPP are the ground plane, inhalation and the vegetation pathways. These dose pathways are reviewed yearly and updated based upon the annual land use census survey in order to insure that actual exposure to an individual will not be substantially underestimated.

The locations of the pathways and descriptions are listed in Table 10.2.

b. Dose Calculation

The dose contributions to the total body and each individual organ (bone, liver, thyroid, kidney, lung and GI-LLI) of the maximum exposed individual (Critical Receptor) due to radioactive gaseous effluent releases is calculated for all radionuclides identified in gaseous effluents released to unrestricted areas using the following expression:

$$D_{apo} = 3.17 \times 10^{-8}\ \overline{W}_{CR} \sum_{i} R_{aipo} \tilde{Q}_i \qquad (33)$$

Where:

D_{apo} = Dose to the critical receptor for age group a, pathway p, and organ o, in mrem.

$\overline{W}_{CR}$ = Critical receptor $\overline{\chi/Q}$ for immersion, inhalation and all tritium pathways (seconds/m^3) from Table 10.2.

= Critical receptor $\overline{D/Q}$ for ground plane and all ingestion pathways (1/m^2) from Table 10.2.

R_{aipo} = Site specific dose factor for age group a, radionuclide i, pathway p, and organ j (mrem/yr per µCi/m^3 for inhalation and tritium pathways - mrem/yr per µCi/(sec m^2) for ground plane and ingestion pathways). These dose factors are listed in Table 10.6.

The site specific dose factors are calculated based upon NUREG 0133 methodology. All dose conversion factors are taken from Reg. Guide 1.109, Rev 1, Tables E6-E14, with the following exceptions: H-3, Sb-124 and Sb-125 dose conversion factors taken from NUREG/CR-4013.

$\tilde{Q}_i$ = The total release of radionuclide i, in units of µCi.

6.2.6 Noble Gas Gaseous Radioactive Waste (GRW) Batch Release Percent Release Rate Limits (PRRLs) and Expected Reading (ER)

The Percent Release Rate Limit (PRRL) for noble gas releases for each unit is calculated based upon the 500 mrem/yr whole body dose rate limit, and is given by Equation 34.

$$PRRL = \frac{\left(\overline{\chi/Q}\right)_{Max} \sum_i K_i \dot{Q}_i}{(0.48)\left(500\ mrem/yr\right)} \times 100\% \qquad (34)$$

Where:

$\left(\overline{\chi/Q}\right)_{Max}$ = The maximum site boundary dispersion factor based on 5 year averages from Table 10.2.

K_i = Whole body dose factor (mrem/yr per μCi/m^3) for isotope "i." Dose factors are presented in Table 10.3.

$\dot{Q}_i$ = Total release rate of isotope "i" from all sources discharged through this release point in μCi/sec.

0.48 = Plant vent allocation factor for one unit from Table 6. 2.

500 mrem/yr = Site noble gas dose rate limit.

The Expected Reading (ER) is the anticipated monitor response based upon the known plant vent concentration and the monitor response factors. The Expected Readings for RE-22, RE-44, RE-14 are given by Equations 35, 36, and 37.

$$ER_{(RE-22)} = BKG_{(RE-22)} + \sum_i k_{(RE-22)i}\, C_{(RE-22)i} \qquad (35)$$

Where:

$ER_{(RE-22)}$ = Expected reading on monitor RE-22 in µCi/cc.

$BKG_{(RE-22)}$ = Monitor background.

$k_{(RE-22)i}$ = Noble gas monitor response factor for nuclide "i" for monitor RE-22.

$C_{(RE-22)i}$ = Concentration of nuclide "i" seen by RE-22.

$$ER_{(RE-44)} = BKG_{(RE-44)} + CCSP_{(RE-44)} \sum_i k_{(RE-44)i}\, C_{(RE-44)i} \qquad (36)$$

Where:

$ER_{(RE-44)}$ = Expected reading on monitor RE-44 in µCi/cc.

$BKG_{(RE-44)}$ = Monitor background.

$CCSP_{(RE-44)}$ = Conversion constant setpoint for monitor RE-44.

$k_{(RE-44)i}$ = Noble gas monitor response factor for nuclide "i" for monitor RE-44.

$C_{(RE-44)i}$ = Concentration of nuclide "i" seen by monitor RE-44.

$$ER_{(RE-14)} = BKG_{(RE-14)} + CCSP_{(RE-14)} \sum_i k_{(RE-14)i}\, C_{(RE-14)i} \qquad (37)$$

Where:

$ER_{(RE-14)}$ = Expected reading on monitor RE-14 in µCi/cc.

$BKG_{(RE-14)}$ = Monitor background.

$CCSP_{(RE-14)}$ = Conversion constant setpoint for monitor RE-14.

$k_{(RE\text{-}14)i}$ = Noble gas monitor response factor for nuclide "i" for monitor RE-14.

$C_{(RE\text{-}14)i}$ = Concentration of nuclide "i" seen by monitor RE-14.

Generally if the Expected Reading (ER) is greater than the existing HASP setting (an "administrative limit" as set by CY2.DC1) then no release should be made until a calculation shows that the HASP (Admin Limit) can be raised so the release can be legally discharged. On the other hand should the ER be less than the existing HASP (Admin Limit), then the release can be discharged.

6.2.7 IPT - PRRL

The Percent Release Rate Limit (PRRL) for radioiodines, tritium and particulates for each unit is calculated based upon the 1500 mrem/yr organ dose rate limit. The dose rate is calculated for the inhalation pathway to the child age group using the highest (worst case) organ dose factor for nuclide. The Percent Release Rate Limit based on the worst case organ is given by Equation 38.

$$PRRL_o = \frac{\left(\overline{\chi/Q}\right)_{Max} \sum_i P_i^w \dot{Q}_i}{(0.48)\left(1500\, mrem/yr\right)} \times 100\% \qquad (38)$$

Where:

$\left(\overline{\chi/Q}\right)_{Max}$ = The maximum site boundary dispersion factor based on 5 year averages from Table 10.2.

P_i^w = Inhalation dose factor for nuclide "i" (mrem/yr/µCi/m3) for child age group for worst case organ, from Table 10.4. Dose factors are based upon NUREG 0133 methodology. Inhalation dose conversion factors are taken from Reg. Guide 1.109, Rev 1, Table E-9, with the following exceptions: H-3, Sb-124 and Sb-125 inhalation dose conversion factors taken from NUREG/CR-4013.

$\dot{Q}_i$ = Release rate of isotope "i" in µCi/sec.

0.48 = Plant vent location factor for one unit from Table 6. 2.

1500 mrem/yr = Site radioiodine, tritium and particulate dose rate limit.

6.2.8 Alternate Dose Methodologies

For purposes of routine gaseous effluent dose assessment, the methodology of NUREG 0133 (described in Section 6.2.5) will be used. However, DCPP may elect to utilize the dose methodologies of Regulatory Guide 1.109 or the GASPAR computer code for special purposes such as evaluation of potential new gaseous effluent dose pathways or critical receptors.

6.2.9 Gas Effluent Dose Projection

The projected dose contributions from each reactor unit due to gaseous effluents for the current calendar month, quarter and current calendar year must be determined in accordance with the methodology and parameters in the ODCP at least every 31 days.

The purpose of this is to determine if appropriate treatment of gaseous radioactive materials in relation to maintaining releases "as low as reasonably achievable," is necessary.

Projections will be made, at least by the end of each month with attention to the frequency requirement contained in radiological effluent controls program.

The projected dose from each reactor unit is given by:

$$D_P = D_{P,U} + \frac{1}{2} D_{P,Com} \qquad (39)$$

Where:

D_P = Projected Dose.

$D_{P,U}$ = Projected dose attributed to reactor unit, U.

$D_{P,Com}$ = Projected dose common to both reactor units.

The 31 day projected dose is calculated by Equation 40.

$$D_P^M = 31 \times \frac{D_A^{PM} + d_A^{CM} + d_P^{CB}}{(T+t)} \quad (40)$$

Where:

D_P^M = Projected Dose for the next 31 day period.

D_A^{PM} = Previous Month's Actual Dose

d_A^{CM} = Current Month Actual Dose to date

d_P^{CB} = Projected Dose from Current Batch Release

T = Number of days in the previous month

t = Number of days into the present month

Projected quarterly doses are determined by Equation 41.

$$D_P^{CQ} = d_A^{CQ} + (92 - t)\frac{D_A^{PQ} + d_A^{CQ} + d_P^{CB}}{(T+t)} \quad (41)$$

Where:

D_P^{CQ} = Projected dose for the current calendar quarter.

d_A^{CQ} = Current quarter to date actual dose.

D_A^{PQ} = Previous quarter's actual dose.

d_P^{CB} = Projected dose as a result of the current batch release.

T = Number of days in the previous quarter.

t = Number of days into the present quarter.

Projected yearly doses are determined by Equation 42.

$$D_P^{(C)} = d_A^{(C)} + (366 - t)\frac{D_A^{(P)} + d_A^{(C)} + d_P^{(B)}}{(T + t)} \qquad (42)$$

Where:

$D_P^{(C)}$ = Projected dose for the current calendar year.

$d_A^{(C)}$ = Current year to date actual dose.

$D_A^{(P)}$ = Previous year's actual dose.

$d_P^{(B)}$ = Projected dose as a result of the current batch release.

T = Number of days in the previous year.

t = Number of days into the present year.

6.2.10 Unplanned Gaseous Releases

a. An unplanned release is an unexpected and potentially unmonitored release to the environment due to operational error or equipment malfunctions.

1. Unmonitored unplanned releases shall have a report written by the Radiochemistry Effluents Engineer describing the event with a calculation, if possible, of the percent of RMCP release rate limit. This will then be forwarded to PSRC for review and then forwarded to NSOC for review.

2. Monitored unplanned releases which exceed 1% of the RMCP release rate limit will also have a report written describing the event and must be forwarded to the PSRC for review, and then forwarded to NSOC for review. For purposes of classification only, unplanned release puffs through the plant vent may use one hour integrated resolution times.

3. Describe these unplanned releases in the Annual radioactive effluent release report. This report will also be forwarded to PSRC and NSOC for review.

6.3 40 CFR 190 Dose Calculations

6.3.1 Pathways

Calculation of total uranium fuel cycle dose for purposes of demonstrating compliance with 40 CFR 190 requires the contributions from liquid and gaseous effluent as well as direct radiation from the units and outside storage tanks to be considered. The total uranium fuel cycle dose to any member of the public will be calculated by summing the following doses:

- Direct Radiation Dose
- Liquid Effluent Dose
- Noble Gas Dose
- Radioiodine, Tritium and Particulate Gaseous Effluent Dose

6.3.2 Methodology

a. Direct Radiation Dose

Determination of direct radiation dose from the reactor units and from outside storage tanks may be made by direct survey measurements, derived from environmental TLD data, or calculated by shielding code.

The direct radiation dose will also take into account residence times near the site based upon land use census information.

The direct radiation determination using environmental TLD is given by equation 43.

$$D'_{s.b.} = \left[\frac{r_{adj}}{800}\right]^2 D'_{r_{ss}} \times (9.57) \times e^{-(6.38)} \qquad (43)$$

where:

$D'_{s.b.}$ = the dose rate at the site boundary

D'_{ss} = the dose rate from the dosimetry reading

r_{adj} = the distance from the point source to the dosimetry

b. Noble Gas Dose

The noble gas skin dose and total body dose contributions to the total uranium fuel cycle dose to a member of the public will be determined as shown in Equations 44 and 45.

$$\text{Noble Gas Total Body Dose} = 3.17 \times 10^{-8} \left(\overline{\chi/Q}\right)_R \sum_i K_i \tilde{Q}_i \quad (44)$$

$$\text{Noble Gas Skin Dose} = 3.17 \times 10^{-8} \left(\overline{\chi/Q}\right)_R \sum_i \left(L_i + 1.1 M_i\right) \tilde{Q}_i \quad (45)$$

Where:

3.17×10^{-8} = Conversion constant yr/sec.

$\left(\overline{\chi/Q}\right)_R$ = Maximum historical dispersion factor for receptor of interest, based on 5 year averages from Table 10.2.

K_i = Gamma air dose factor for nuclide i, in mrem/yr per $\mu Ci/m^3$. Values are listed in Table 6.3.

L_i = Gamma air dose factor for nuclide i, in mrem/yr per $\mu Ci/m^3$. Values are listed in Table 6.3.

1.1 = Conversion factor mrem/mrad. Converts air dose to skin dose.

M_i = Gamma air dose factor for nuclide i, in mrad/yr per $\mu Ci/m^3$. Values are listed in Table 10.3.

$\tilde{Q}_i$ = Total release of noble gas radionuclide, i, in $\mu Ci/sec$.

c. Liquid and Gaseous Effluent Dose

The doses from liquid effluents and radioiodines, tritium and particulates in gaseous effluents will be determined by Equations 1 and 33, respectively.

For purposes of calculating the dose required by the radiological effluent controls, more realistic assumptions concerning the liquid and gaseous effluent dose pathways will be used, based upon the most recent land use census data as well as the latest environmental monitoring information.

These assumptions may include, but not be limited to: more realistic liquid dilution factors, location and age of actual individuals, site specific food pathway parameters, and documentation of true food consumption. Other assumptions may be used provided they can be substantiated by census or direct measurement.

6.4 On-Site Dose to Members of the Public

Members of the public are occasionally granted access within the site boundary, but only in the owner controlled area up to the protected area boundary. The most common public access activities are: tours to the simulator (training building) or Bio Lab, policemen using the shooting range (most frequent activity), cattle drives through to adjacent properties, and visits of American Indians to on-site burial grounds (closest to the plant).

Exposure to members of the public due to liquid releases while on-site is highly unlikely and therefore not addressed. Exposure due to gaseous releases and direct radiation are credible and therefore are considered.

The dose to members of the public during on-site activities will be primarily determined by the duration of the on-site visitation time and by the closest proximity to the plant.

For gaseous releases the doses are calculated using Equations 44, 45 and 33. The R_i's in Equation 33 consider only the inhalation and ground plane pathway and exclude the infant age group.

The X/Q and D/Q values are modified using logarithmic extrapolation from the site boundary to the on-site location of interest as shown in Equations 46 and 47.

$$\log\left[X/Q\right]_{on\text{-}site} \approx \frac{\log\left[X/Q\right]_{S.B.} - \log\left[X/Q\right]_{loc.}}{\log\left(dist.S.B.\right) - \log\left(dist.loc.\right)}\left[\log\left(dist.on\text{-}site\right) - \log\left(dist.S.B.\right)\right] + \log\left[X/Q\right]_{S.B.} \quad (46)$$

$$\log\left[D/Q\right]_{on\text{-}site} \approx \frac{\log\left[D/Q\right]_{S.B.} - \log\left[D/Q\right]_{loc.}}{\log\left(dist.S.B.\right) - \log\left(dist.loc.\right)}\left[\log\left(dist.on\text{-}site\right) - \log\left(dist.S.B.\right)\right] + \log\left[D/Q\right]_{S.B.} \quad (47)$$

Based upon Regulatory Guide 1.111, these equations can be expected to provide reasonable dispersion and deposition estimates for distances as close as 200 meters.

Determination of direct radiation dose from the reactor units and from outside storage tanks may be made by direct survey measurements, derived from environmental TLD data, or calculated by shielding code.

A distance of 200 meters from the plant (both units) equidistant from the plant vent is arbitrarily selected as the closest perimeter for which on-site doses will be calculated.

The activities of the members-of-the-public while on-site (described above), are at or beyond 200 meters. Table 6. 3 details the types of on-site activities that members-of-the-public might be expected to participate in at DCPP. The sectors and closest distances in which they may visit as well as expected visitation duration are also shown (based on Security Section information).

Table 6. 3

Expected On-Site Distances and Visitation Times for Members of the Public

ONSITE MEMBER OF THE PUBLIC	SECTOR OF VISITATION	CLOSEST POINT OF APPROACH TO PLANT	AVERAGE EXPECTED VISITATION TIME PER YEAR
Police at shooting range	SE	700m	208 hours
Tour Participants			
Simulator Bldg	S (SE)	310m	4 hours
Bio Lab	SSE (SE)	460m	6 hours
Overlook	E	210m	1 hours
American Indians at burial grounds	NW NNW	200m 200m	96 hours 96 hours
Ranch hands driving cattle around site	NW NNW N NNE NE	250m 350m 320m 450m 630m	1 hour 1 hour 1 hour 1 hour 1 hour

7. ACCEPTANCE CRITERIA

7.1 There is no quantitative acceptance for this procedure. If the task or analysis has been accomplished within the bounds of this procedure, it is considered acceptable.

8. REFERENCES

8.1 Draft Radiological Tech Specs for PWRs, NUREG No. 0472, May 1978.

8.2 Calculation of Annual Doses to Man From Routine Releases of Reactor Effluents for the Purpose of Evaluating Compliance with 10 CFR 50, Appendix I, Regulatory Guide 1.109, Rev. 0, March 1976.

8.3 Calculation of Annual Doses to Man From Routine Releases of Reactor Effluents for the Purpose of Evaluating Compliance with 10 CFR 50, Appendix I, Regulatory Guide 1.109, Rev. 1, October 1977.

8.4 Preparation of Radiological Effluent Tech Specs for Nuclear Power Plants, NUREG No. 0133, October 1978.

8.5 LADTAP II - Technical Reference and User Guide, NUREG/CR-4013.

8.6 Methods for Demonstrating LWR Compliance with the EPA Uranium Fuel Cycle Standard 40 CFR 190, NUREG No. 0543, January 1980.

8.7 Methods for Estimating Atmospheric Transport and Dispersion of Gaseous Effluents in Routine Releases from Light-Water-Cooled Reactors, Regulatory Guide, 1.111, Rev. 1, July, 1977.

8.8 Radioactive Decay Data Tables, David C. Kocher. DOE/TIC-11026, 1981.

8.9 CAP A-6, "Gaseous Radwaste Discharge Management."

8.10 CAP A-5, "Liquid Radwaste Discharge Management."

8.11 CAP D-15, "Steam Generator Leak Rate Determination."

8.12 CAP D-19, "Correlation of Rad Monitors to Radioactivity."

8.13 CY2.DC1, "Radiation Monitoring System High Alarm Setpoint Control Procedure."

8.14 CY2.ID1, "Radiological Monitoring and Controls Program" (RMCP)

8.15 "Setpoint Calculation for Containment Ventilation Exhaust Monitor." Calc # NSP-1&2-39-44, 10/92 and 11/92 and AR A0430610.

9. RECORDS

9.1 Data Sheets and records will be maintained in the Records Management System (RMS) in accordance with CY1.DC1, "Analytical Data Processing Responsibilities."

10. APPENDICES

10.1 Tables

11. ATTACHMENTS

None

12. SPONSOR

Jeff Gardner

FIGURE 6.1
LIQUID DISCHARGES (LRW) MONITORED FOR RADIOACTIVITY

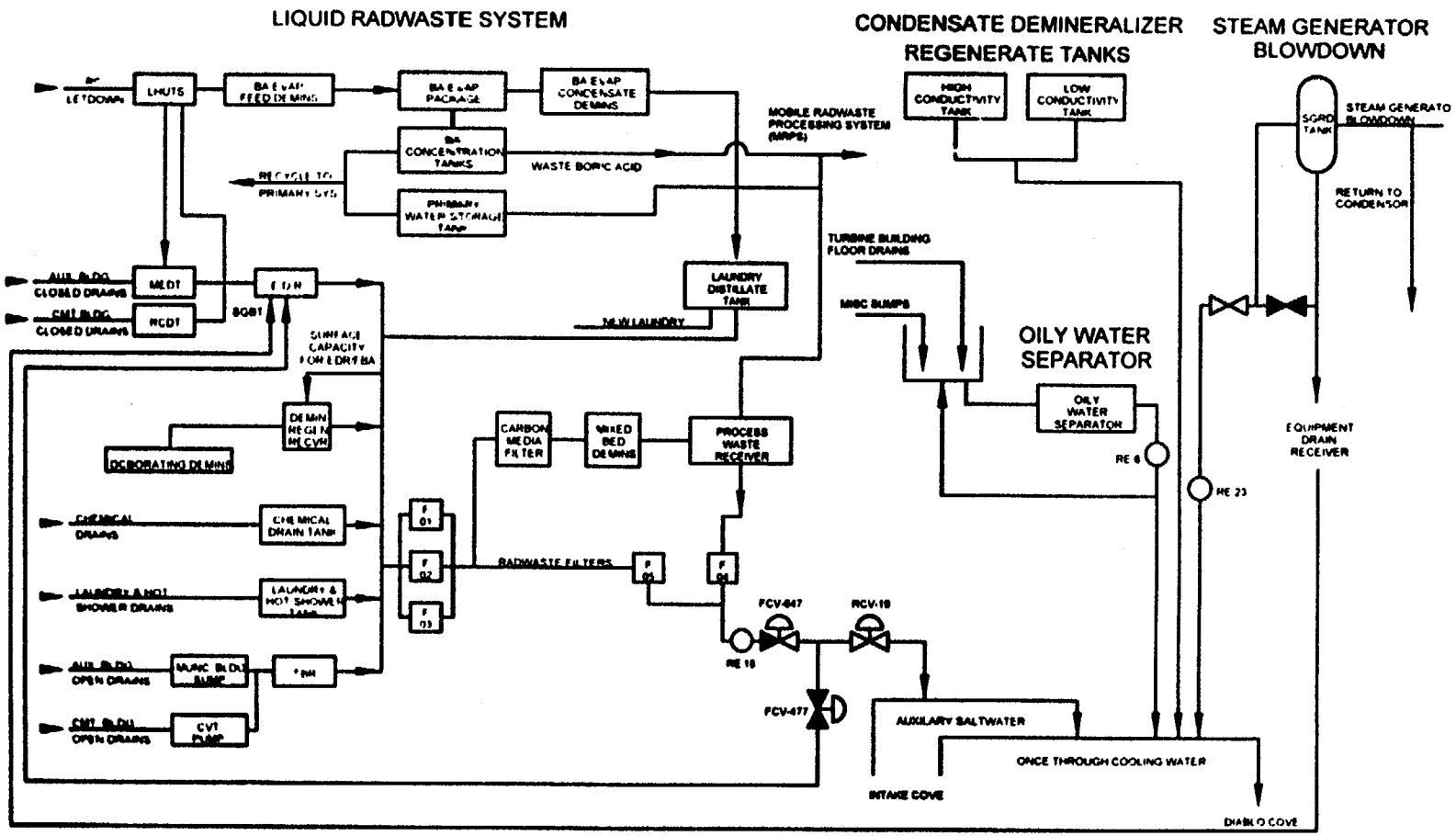

00692302

FIGURE 6.2
GASEOUS RELEASES (GRW) MONITORED FOR RADIOACTIVITY

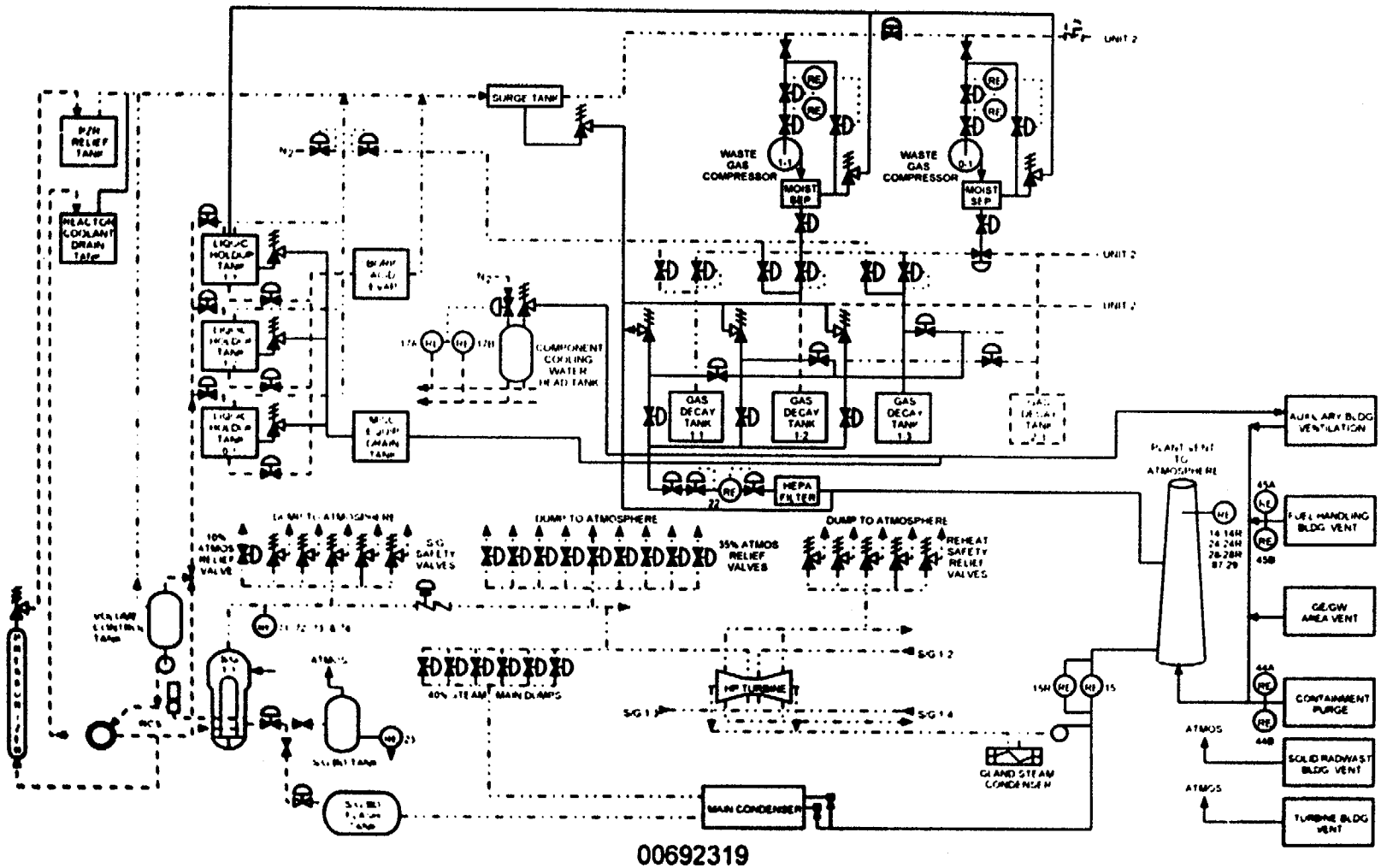

00692319

TABLE 10.1

LRW COMPOSITE DOSE FACTORS[1], A_{iot}
FOR ADULTS AT A SALTWATER SITE
(mrem/hour per µCi/ml)
organ "o"

Nuclide	Tot Body	Thyroid	Kidney	Lung	GI-LLI	Bone	Liver
H-3	1.61E-01	1.61E-01	1.61E-01	1.61E-01	1.61E-01	0.00E+00	1.61E-01
Na-24	4.57E-01	4.57E-01	4.57E-01	4.57E-01	4.57E-01	4.57E-01	4.57E-01
Cr-51	5.58E+00	3.34E+00	1.23E+00	7.40E+00	1.40E+03	0.00E+00	0.00E+00
Mn-54	1.35E+03	0.00E+00	2.10E+03	0.00E+00	2.16E+04	0.00E+00	7.06E+03
Mn-56	3.15E+01	0.00E+00	2.26E+02	0.00E+00	5.67E+03	0.00E+00	1.78E+02
Fe-55	8.23E+03	0.00E+00	0.00E+00	1.97E+04	2.03E+04	5.11E+04	3.53E+04
Fe-59	7.27E+04	0.00E+00	0.00E+00	5.30E+04	6.32E+05	8.06E+04	1.90E+05
Co-57	2.36E+02	0.00E+00	0.00E+00	0.00E+00	3.59E+03	0.00E+00	1.42E+02
Co-58	1.35E+03	0.00E+00	0.00E+00	0.00E+00	1.22E+04	0.00E+00	6.03E+02
Co-60	3.82E+03	0.00E+00	0.00E+00	0.00E+00	3.25E+04	0.00E+00	1.73E+03
Ni-65	1.20E+01	0.00E+00	0.00E+00	0.00E+00	6.65E+02	2.02E+02	2.62E+01
Cu-64	1.01E+02	0.00E+00	5.40E+02	0.00E+00	1.83E+04	0.00E+00	2.14E+02
Zn-65	2.32E+05	0.00E+00	3.43E+05	0.00E+00	3.23E+05	1.61E+05	5.13E+05
Zn-69	4.56E+01	0.00E+00	4.26E+02	0.00E+00	9.85E+01	3.43E+02	6.56E+02
As-76	4.42E+01	0.00E+00	8.72E+01	0.00E+00	0.00E+00	0.00E+00	4.62E+01
Br-82	4.07E+00	0.00E+00	0.00E+00	0.00E+00	4.67E+00	0.00E+00	0.00E+00
Br-84	9.39E-02	0.00E+00	0.00E+00	0.00E+00	7.37E-07	0.00E+00	0.00E+00
Rb-86	2.91E+02	0.00E+00	0.00E+00	0.00E+00	1.23E+02	0.00E+00	6.24E+02
Rb-88	9.49E-01	0.00E+00	0.00E+00	0.00E+00	2.47E-11	0.00E+00	1.79E+00
Rb-89	8.34E-01	0.00E+00	0.00E+00	0.00E+00	6.89E-14	0.00E+00	1.19E+00
Sr-89	1.43E+02	0.00E+00	0.00E+00	0.00E+00	8.00E+02	4.99E+03	0.00E+00
Sr-90	2.83E+03	0.00E+00	0.00E+00	0.00E+00	3.55E+03	1.41E+05	0.00E+00
Sr-91	3.71E+00	0.00E+00	0.00E+00	0.00E+00	4.37E+02	9.18E+01	0.00E+00
Sr-92	1.51E+00	0.00E+00	0.00E+00	0.00E+00	6.90E+02	3.48E+01	0.00E+00
Y-90	1.63E-01	0.00E+00	0.00E+00	0.00E+00	6.42E+04	6.06E+00	0.00E+00
Y-91m	2.22E-03	0.00E+00	0.00E+00	0.00E+00	1.68E-01	5.73E-02	0.00E+00
Y-92	1.56E-02	0.00E+00	0.00E+00	0.00E+00	9.32E+03	5.32E-01	0.00E+00
Zr-95	3.46E+00	0.00E+00	8.02E+00	0.00E+00	1.62E+04	1.59E+01	5.11E+00
Zr-97	8.13E-02	0.00E+00	2.68E-01	0.00E+00	5.51E+04	8.81E-01	1.78E-01
Nb-95	1.34E+02	0.00E+00	2.46E+02	0.00E+00	1.51E+06	4.47E+02	2.49E+02
Mo-99	2.43E+01	0.00E+00	2.89E+02	0.00E+00	2.96E+02	0.00E+00	1.28E+02
Tc-101	1.88E-01	0.00E+00	3.46E-01	9.81E-03	5.77E-14	1.33E-02	1.92E-02
Ru-103	4.60E+01	0.00E+00	4.07E+02	0.00E+00	1.25E+04	1.07E+02	0.00E+00
Ru-105	3.51E+00	0.00E+00	1.15E+02	0.00E+00	5.44E+03	8.89E+00	0.00E+00
Ru-106	2.01E+02	0.00E+00	3.06E+03	0.00E+00	1.03E+05	1.59E+03	0.00E+00
Ag-110m	8.60E+02	0.00E+00	2.85E+03	0.00E+00	5.91E+05	1.56E+03	1.45E+03
Sn-113	3.53E+03	9.85E+02	0.00E+00	0.00E+00	0.00E+00	6.06E+04	1.66E+03
Sn-117m	8.76E+02	2.52E+02	0.00E+00	0.00E+00	0.00E+00	3.02E+03	3.41E+02
Sb-122	6.65E+00	3.09E-01	0.00E+00	1.18E+01	0.00E+00	2.19E+01	4.47E-01
Sb-124	1.09E+02	6.70E-01	0.00E+00	2.15E+02	7.84E+03	2.76E+02	5.22E+00
Sb-125	4.20E+01	1.79E-01	0.00E+00	1.36E+02	1.94E+03	1.77E+02	1.97E+00

LRW COMPOSITE DOSE FACTORS[1], A_{io},
FOR ADULTS AT A SALTWATER SITE
(mrem/hour per µCi/ml)
organ "o"

Nuclide	Tot Body	Thyroid	Kidney	Lung	GI-LLI	Bone	Liver
Te-129m	1.47E+02	3.20E+02	3.89E+03	0.00E+00	4.69E+03	9.31E+02	3.47E+02
Te-129	6.19E-01	1.95E+00	1.07E+01	0.00E+00	1.92E+00	2.54E+00	9.55E-01
Te-131m	5.71E+01	1.08E+02	6.94E+02	0.00E+00	6.80E+03	1.40E+02	6.85E+01
Te-131	5.03E-01	1.31E+00	6.99E+00	0.00E+00	2.26E-01	1.59E+00	6.66E-01
Te-132	1.24E+02	1.46E+02	1.27E+03	0.00E+00	6.24E+03	2.04E+02	1.32E+02
I-131	1.79E+02	1.02E+05	5.35E+02	0.00E+00	8.23E+01	2.18E+02	3.12E+02
I-132	9.96E+00	9.96E+02	4.54E+01	0.00E+00	5.35E+00	1.06E+01	2.85E+01
I-133	3.95E+01	1.90E+04	2.26E+02	0.00E+00	1.16E+02	7.45E+01	1.30E+02
I-134	5.40E+00	2.62E+02	2.40E+01	0.00E+00	1.32E-02	5.56E+00	1.51E+01
I-135	2.24E+01	4.01E+03	9.75E+01	0.00E+00	6.87E+01	2.32E+01	6.08E+01
Cs-134	1.33E+04	0.00E+00	5.27E+03	1.75E+03	2.85E+02	6.84E+03	1.63E+04
Cs-136	2.04E+03	0.00E+00	1.57E+03	2.16E+02	3.21E+02	7.16E+02	2.83E+03
Cs-137	7.85E+03	0.00E+00	4.07E+03	1.35E+03	2.32E+02	8.77E+03	1.20E+04
Cs-138	5.94E+00	0.00E+00	8.81E+00	8.70E-01	5.12E-05	6.07E+00	1.20E+01
Ba-139	2.30E-01	0.00E+00	5.23E-03	3.17E-03	1.39E+01	7.85E+00	5.59E-03
Ba-140	1.08E+02	0.00E+00	7.02E-01	1.18E+00	3.38E+03	1.64E+03	2.06E+00
Ba-141	1.29E-01	0.00E+00	2.68E-03	1.63E-03	1.80E-09	3.81E+00	2.88E-03
La-140	2.10E-01	0.00E+00	0.00E+00	0.00E+00	5.83E+04	1.57E+00	7.94E-01
La-142	9.13E-03	0.00E+00	0.00E+00	0.00E+00	2.68E+02	8.06E-02	3.67E-02
Ce-141	2.63E-01	0.00E+00	1.08E+00	0.00E+00	8.86E+03	3.43E+00	2.32E+00
Ce-143	4.94E-02	0.00E+00	1.97E-01	0.00E+00	1.67E+04	6.04E-01	4.46E+02
Ce-144	9.59E+00	0.00E+00	4.43E+01	0.00E+00	6.04E+04	1.79E+02	7.47E+01
Pr-144	9.64E-04	0.00E+00	4.44E-03	0.00E+00	2.73E-09	1.90E-02	7.87E-03
Nd-147	2.74E-01	0.00E+00	2.68E+00	0.00E+00	2.20E+04	3.96E+00	4.58E+00
W-187	2.68E+00	0.00E+00	0.00E+00	0.00E+00	2.51E+03	9.16E+00	7.66E+00
Np-239	1.91E-03	0.00E+00	1.08E-02	0.00E+00	7.11E+02	3.53E-02	3.47E-03

[1] Dose factors are based upon NUREG 0133 methodology.

7528/482

TABLE 10.2
SUMMARY OF LAND USE CENSUS EVALUATION

Sector	Receptor Description	Distance (miles)	X/Q	D/Q	Comments
N	none				no receptors within 5 miles
NNE	residence	4.4	5.39E-8	9.24E-11	unknown use
	residence	3.3	8.30E-8	1.54E-10	cabin - limited use
NE	residence	4.9	4.10E-8	6.51E-11	full time occupancy
ENE	residence	4.4	4.35E-8	8.41E-11	full time occupancy
	residence	5.0	3.15E-8	5.63E-11	full time occupancy
E	residence	4.0	4.73E-8	1.26E-10	cabin - unknown use
	residence	3.7	5.75E-8	1.60E-10	part time occupancy
	residence + garden	4.5	3.98E-8	1.02E-10	full time occupancy
ESE	oat hay and sugar peas	3.3	1.91E-7	1.26E-9	field workers present only during the day - **critical receptor ground plane, inhalation, and vegetation ingestion dose assessed at this location**
SE	none				no receptors within 5 miles
SSE	none				over water
S	none				over water
SSW	none				over water
SW	none				over water
WSW	none				over water
W	none				over water
WNW	none				over water
NW	highest site boundary dispersion value	0.5	4.97E-6	1.97E-8	**Gas effluent dose rates. PRRLs and HASPs evaluated at this location.**
	residence	1.2	1.49E-6	6.22E-9	cabin - very limited use
	residence	3.6	2.06E-7	7.00E-10	full time occupancy
NNW	residence	1.5	5.87E-7	1.89E-9	full time occupancy (trailer) - **critical receptor ground plane and inhalation dose assessed at this location**

TABLE 10.3

GRW DOSE FACTORS FOR NOBLE GASES[1]

Radionuclide	Whole Body Dose Factor K_i (mrem/yr per $\mu Ci/m^3$)	Skin Dose Factor L_i (mrem/yr per $\mu Ci/m^3$)	Gamma Air Dose Factor M_i (mrad/yr per $\mu Ci/m^3$)	Beta Air Dose Factor N_i (mrad/yr per $\mu Ci/m^3$)
Kr-83m	7.56E-02	----	1.93E+01	2.88E+02
Kr-85m	1.17E+03	1.46E+03	1.23E+03	1.97E+03
Kr-85	1.61E+01	1.34E+03	1.72E+01	1.95E+03
Kr-87	5.92E+03	9.73E+03	6.17E+03	1.03E+04
Kr-88	1.47E+04	2.37E+03	1.52E+04	2.93E+03
Kr-89	1.66E+04	1.01E+04	1.73E+04	1.06E+04
Kr-90	1.56E+04	7.29E+03	1.63E+04	7.83E+03
Xe-131m	9.15E+01	4.76E+02	1.56E+02	1.11E+03
Xe-133m	2.51E+02	9.94E+02	3.27E+02	1.48E+03
Xe-133	2.94E+02	3.06E+02	3.53E+02	1.05E+03
Xe-135m	3.12E+03	7.11E+02	3.36E+03	7.39E+02
Xe-135	1.81E+03	1.86E+03	1.92E+03	2.46E+03
Xe-137	1.42E+03	1.22E+04	1.51E+03	1.27E+04
Xe-138	8.83E+03	4.13E+03	9.21E+03	4.75E+03
Ar-41	8.84E+03	2.69E+03	9.30E+03	3.28E+03

[1] From Table B-1 of Regulatory Guide 1.109 (Rev. 1, Oct. 1977)

TABLE 10.4

CHILD INHALATION PATHWAY DOSE FACTORS FOR WORST CASE ORGAN

Radionuclide	P_i^w
H-3	6.40E+02
CR-51	1.70E+04
MN-54	1.58E+06
FE-59	1.27E+06
CO-58	1.11E+06
CO-60	7.07E+06
ZN-65	9.95E+05
RB-86	1.98E+05
SR-89	2.16E+06
Y-90	2.68E+05
SR-90	3.85E+07
ZR-95	2.23E+06
NB-95	6.14E+05
RU-103	6.62E+05
RU-106	1.43E+07
AG-110M	5.48E+06
SB-124	3.24E+06
SB-125	2.32E+06
TE-129M	1.76E+06
I-131	1.62E+07
I-133	3.85E+06
CS-134	1.01E+06
CS-136	1.71E+05
CS-137	9.07E+05
BA-140	1.74E+06
CE-141	5.44E+05
CE-144	1.20E+07
ND-147	3.28E+05

TABLE 10.5

GROUND PLANE DOSE FACTORS

GRW DOSE PARAMETERS[1], $R_{i\,GP}$ FOR RADIOIODINES, RADIOACTIVE PARTICULATES, AND ANY RADIONUCLIDE OTHER THAN NOBLE GAS (IPT), GASEOUS EFFLUENTS (GRW), ANY AGE GROUP, GROUND PLANE PATHWAY

(mrem/yr per μCi/(sec m²))

Nuclide	Bone	Liver	T Body	Thyroid	Kidney	Lung	GI-LLI
H-3	0.00E+00	0.00E+00	0.00E+00	0.00E+00	0.00E+00	0.00E+00	0.00E+00
CR-51	4.65E+06	4.65E+06	4.65E+06	4.65E+06	4.65E+06	4.65E+06	4.65E+06
MN-54	1.38E+09	1.38E+09	1.38E+09	1.38E+09	1.38E+09	1.38E+09	1.38E+09
FE-59	2.73E+08	2.73E+08	2.73E+08	2.73E+08	2.73E+08	2.73E+08	2.73E+08
CO-58	3.80E+08	3.80E+08	3.80E+08	3.80E+08	3.80E+08	3.80E+08	3.80E+08
CO-60	2.15E+10	2.15E+10	2.15E+10	2.15E+10	2.15E+10	2.15E+10	2.15E+10
ZN-65	7.46E+08	7.46E+08	7.46E+08	7.46E+08	7.46E+08	7.46E+08	7.46E+08
RB-86	8.98E+06	8.98E+06	8.98E+06	8.98E+06	8.98E+06	8.98E+06	8.98E+06
SR-89	2.16E+04	2.16E+04	2.16E+04	2.16E+04	2.16E+04	2.16E+04	2.16E+04
Y-90	4.50E+03	4.50E+03	4.50E+03	4.50E+03	4.50E+03	4.50E+03	4.50E+03
SR-90	0.00E+00	0.00E+00	0.00E+00	0.00E+00	0.00E+00	0.00E+00	0.00E+00
ZR-95	2.45E+08	2.45E+08	2.45E+08	2.45E+08	2.45E+08	2.45E+08	2.45E+08
NB-95	1.37E+08	1.37E+08	1.37E+08	1.37E+08	1.37E+08	1.37E+08	1.37E+08
RU-103	1.08E+08	1.08E+08	1.08E+08	1.08E+08	1.08E+08	1.08E+08	1.08E+08
RU-106	4.20E+08	4.20E+08	4.20E+08	4.20E+08	4.20E+08	4.20E+08	4.20E+08
AG-110M	3.45E+09	3.45E+09	3.45E+09	3.45E+09	3.45E+09	3.45E+09	3.45E+09
SB-124	5.99E+08	5.99E+08	5.99E+08	5.99E+08	5.99E+08	5.99E+08	5.99E+08
SB-125	2.34E+09	2.34E+09	2.34E+09	2.34E+09	2.34E+09	2.34E+09	2.34E+09
TE-129M	1.98E+07	1.98E+07	1.98E+07	1.98E+07	1.98E+07	1.98E+07	1.98E+07
I-131	1.72E+07	1.72E+07	1.72E+07	1.72E+07	1.72E+07	1.72E+07	1.72E+07
I-133	2.45E+06	2.45E+06	2.45E+06	2.45E+06	2.45E+06	2.45E+06	2.45E+06
CS-134	6.90E+09	6.90E+09	6.90E+09	6.90E+09	6.90E+09	6.90E+09	6.90E+09
CS-136	1.51E+08	1.51E+08	1.51E+08	1.51E+08	1.51E+08	1.51E+08	1.51E+08
CS-137	1.03E+10	1.03E+10	1.03E+10	1.03E+10	1.03E+10	1.03E+10	1.03E+10
BA-140	2.05E+07	2.05E+07	2.05E+07	2.05E+07	2.05E+07	2.05E+07	2.05E+07
CE-141	1.37E+07	1.37E+07	1.37E+07	1.37E+07	1.37E+07	1.37E+07	1.37E+07
CE-144	6.96E+07	6.96E+07	6.96E+07	6.96E+07	6.96E+07	6.96E+07	6.96E+07
ND-147	8.39E+06	8.39E+06	8.39E+06	8.39E+06	8.39E+06	8.39E+06	8.39E+06

[1] Dose factors are based upon NUREG 0133 methodology.

TABLE 10.6

GRW DOSE PARAMETERS FOR RADIOIODINES, RADIOACTIVE PARTICULATES, AND ANY RADIONUCLIDE OTHER THAN NOBLE GAS (IPT), GASEOUS EFFLUENTS (GRW)

TABLE 10.6.1

GRW DOSE PARAMETERS[1] FOR RADIOIODINES, RADIOACTIVE PARTICULATES, AND ANY RADIONUCLIDE OTHER THAN NOBLE GAS (IPT), GASEOUS EFFLUENTS (GRW), INFANT AGE GROUP, INHALATION PATHWAY ORGAN "O" (mrem/yr per μCi/m³) $R_{i,Inhal}$

Nuclide	Bone	Liver	T Body	Thyroid	Kidney	Lung	GI-LLI
H-3	0.00E+00	3.68E+02	3.68E+02	3.68E+02	3.68E+02	3.68E+02	3.68E+02
CR-51	0.00E+00	0.00E+00	8.95E+01	5.75E+01	1.32E+01	1.28E+04	3.57E+02
MN-54	0.00E+00	2.53E+04	4.98E+03	0.00E+00	4.98E+03	1.00E+06	7.06E+03
FE-59	1.36E+04	2.35E+04	9.48E+03	0.00E+00	0.00E+00	1.02E+06	2.48E+04
CO-58	0.00E+00	1.22E+03	1.82E+03	0.00E+00	0.00E+00	7.77E+05	1.11E+04
CO-60	0.00E+00	8.02E+03	1.18E+04	0.00E+00	0.00E+00	4.51E+06	3.19E+04
ZN-65	1.93E+04	6.26E+04	3.11E+04	0.00E+00	3.25E+04	6.47E+05	5.14E+04
RB-86	0.00E+00	1.90E+05	8.82E+04	0.00E+00	0.00E+00	0.00E+00	3.04E+03
SR-89	3.98E+05	0.00E+00	1.14E+04	0.00E+00	0.00E+00	2.03E+06	6.40E+04
Y-90	3.29E+03	0.00E+00	8.82E+01	0.00E+00	0.00E+00	2.69E+05	1.04E+05
SR-90	1.55E+07	0.00E+00	3.12E+05	0.00E+00	0.00E+00	1.12E+07	1.31E+05
ZR-95	1.15E+05	2.79E+04	2.03E+04	0.00E+00	3.11E+04	1.75E+06	2.17E+04
NB-95	1.57E+04	6.43E+03	3.78E+03	0.00E+00	4.72E+03	4.79E+05	1.27E+04
RU-103	2.02E+03	0.00E+00	6.79E+02	0.00E+00	4.24E+03	5.52E+05	1.61E+04
RU-106	8.68E+04	0.00E+00	1.09E+04	0.00E+00	1.07E+05	1.16E+07	1.64E+05
AG-110M	9.98E+03	7.22E+03	5.00E+03	0.00E+00	1.09E+04	3.67E+06	3.30E+04
SB-124	3.79E+04	5.56E+02	1.20E+04	1.01E+02	0.00E+00	2.65E+06	5.91E+04
SB-125	5.17E+04	4.77E+02	1.09E+04	6.23E+01	0.00E+00	1.64E+06	1.47E+04
TE-129M	1.41E+04	6.09E+03	2.23E+03	5.47E+03	3.18E+04	1.68E+06	6.90E+04
I-131	3.79E+04	4.44E+04	1.96E+04	1.48E+07	5.18E+04	0.00E+00	1.06E+03
I-133	1.32E+04	1.92E+04	5.60E+03	3.56E+06	2.24E+04	0.00E+00	2.16E+03
CS-134	3.96E+05	7.03E+05	7.45E+04	0.00E+00	1.90E+05	7.97E+04	1.33E+03
CS-136	4.83E+04	1.35E+05	5.29E+04	0.00E+00	5.64E+04	1.18E+04	1.43E+03
CS-137	5.49E+05	6.12E+05	4.55E+04	0.00E+00	1.72E+05	7.13E+04	1.33E+03
BA-140	5.60E+04	5.60E+01	2.90E+03	0.00E+00	1.34E+01	1.60E+06	3.84E+04
CE-141	2.77E+04	1.67E+04	1.99E+03	0.00E+00	5.25E+03	5.17E+05	2.16E+04
CE-144	3.19E+06	1.21E+06	1.76E+05	0.00E+00	5.38E+05	9.84E+06	1.48E+05
ND-147	7.94E+03	8.13E+03	5.00E+02	0.00E+00	3.15E+03	3.22E+05	3.12E+04

[1] Dose factors are based upon NUREG 0133 methodology.

7528/689

TABLE 10.6.2

GRW DOSE PARAMETERS[1] FOR RADIOIODINES, RADIOACTIVE PARTICULATES, AND ANY RADIONUCLIDE OTHER THAN NOBLE GAS (IPT), GASEOUS EFFLUENTS (GRW), CHILD AGE GROUP, INHALATION PATHWAY ORGAN "O" (mrem/yr per μCi/m^3) $R_{i,\,Inhal}$

Nuclide	Bone	Liver	T Body	Thyroid	Kidney	Lung	GI-LLI
H-3	0.00E+00	6.40E+02	6.40E+02	6.40E+02	6.40E+02	6.40E+02	6.40E+02
CR-51	0.00E+00	0.00E+00	1.54E+02	8.55E+01	2.43E+01	1.70E+04	1.08E+03
MN-54	0.00E+00	4.29E+04	9.51E+03	0.00E+00	1.00E+04	1.58E+06	2.29E+04
FE-59	2.07E+04	3.34E+04	1.67E+04	0.00E+00	0.00E+00	1.27E+06	7.07E+04
CO-58	0.00E+00	1.77E+03	3.16E+03	0.00E+00	0.00E+00	1.11E+06	3.44E+04
CO-60	0.00E+00	1.31E+04	2.26E+04	0.00E+00	0.00E+00	7.07E+06	9.62E+04
ZN-65	4.26E+04	1.13E+05	7.03E+04	0.00E+00	7.14E+04	9.95E+05	1.63E+04
RB-86	0.00E+00	1.98E+05	1.14E+05	0.00E+00	0.00E+00	0.00E+00	7.99E+03
SR-89	5.99E+05	0.00E+00	1.72E+04	0.00E+00	0.00E+00	2.16E+06	1.67E+05
Y-90	4.11E+03	0.00E+00	1.11E+02	0.00E+00	0.00E+00	2.62E+05	2.68E+05
SR-90	3.85E+07	0.00E+00	7.66E+05	0.00E+00	0.00E+00	1.48E+07	3.43E+05
ZR-95	1.90E+05	4.18E+04	3.70E+04	0.00E+00	5.96E+04	2.23E+06	6.11E+04
NB-95	2.35E+04	9.18E+03	6.55E+03	0.00E+00	8.62E+03	6.14E+05	3.70E+04
RU-103	2.79E+03	0.00E+00	1.07E+03	0.00E+00	7.03E+03	6.62E+05	4.48E+04
RU-106	1.36E+05	0.00E+00	1.69E+04	0.00E+00	1.84E+05	1.43E+07	4.29E+05
AG-110M	1.69E+04	1.14E+04	9.14E+03	0.00E+00	2.12E+04	5.48E+06	1.00E+05
SB-124	5.74E+04	7.40E+02	2.00E+04	1.26E+02	0.00E+00	3.24E+06	1.64E+05
SB-125	9.84E+04	7.59E+02	2.07E+04	9.10E+01	0.00E+00	2.32E+06	4.03E+04
TE-129M	1.92E+04	6.85E+03	3.04E+03	6.33E+03	5.03E+04	1.76E+06	1.82E+05
I-131	4.81E+04	4.81E+04	2.73E+04	1.62E+07	7.88E+04	0.00E+00	2.84E+03
I-133	1.66E+04	2.03E+04	7.70E+03	3.85E+06	3.38E+04	0.00E+00	5.48E+03
CS-134	6.51E+05	1.01E+06	2.25E+05	0.00E+00	3.30E+05	1.21E+05	3.85E+03
CS-136	6.51E+04	1.71E+05	1.16E+05	0.00E+00	9.55E+04	1.45E+04	4.18E+03
CS-137	9.07E+05	8.25E+05	1.28E+05	0.00E+00	2.82E+05	1.04E+05	3.62E+03
BA-140	7.40E+04	6.48E+01	4.33E+03	0.00E+00	2.11E+01	1.74E+06	1.02E+05
CE-141	3.92E+04	1.95E+04	2.90E+03	0.00E+00	8.55E+03	5.44E+05	5.66E+04
CE-144	6.77E+06	2.12E+06	3.61E+05	0.00E+00	1.17E+06	1.20E+07	3.89E+05
ND-147	1.08E+04	8.73E+03	6.81E+02	0.00E+00	4.81E+03	3.28E+05	8.21E+04

[1] Dose factors are based upon NUREG 0133 methodology.

TABLE 10.6.3

GRW DOSE PARAMETERS[1] FOR RADIOIODINES, RADIOACTIVE PARTICULATES, AND ANY RADIONUCLIDE OTHER THAN NOBLE GAS (IPT), GASEOUS EFFLUENTS (GRW), TEEN AGE GROUP, INHALATION PATHWAY ORGAN "O" (mrem/yr per µCi/m^3) $R_{i,Inhal}$

Nuclide	Bone	Liver	T Body	Thyroid	Kidney	Lung	GI-LLI
H-3	0.00E+00	7.25E+02	7.25E+02	7.25E+02	7.25E+02	7.25E+02	7.25E+02
CR-51	0.00E+00	0.00E+00	1.35E+02	7.50E+01	3.07E+01	2.10E+04	3.00E+03
MN-54	0.00E+00	5.11E+04	8.40E+03	0.00E+00	1.27E+04	1.98E+06	6.68E+04
FE-59	1.59E+04	3.70E+04	1.43E+04	0.00E+00	0.00E+00	1.53E+06	1.78E+05
CO-58	0.00E+00	2.07E+03	2.78E+03	0.00E+00	0.00E+00	1.34E+06	9.52E+04
CO-60	0.00E+00	1.51E+04	1.98E+04	0.00E+00	0.00E+00	8.72E+06	2.59E+05
ZN-65	3.86E+04	1.34E+05	6.24E+04	0.00E+00	8.64E+04	1.24E+06	4.66E+04
RB-86	0.00E+00	1.90E+05	8.40E+04	0.00E+00	0.00E+00	0.00E+00	1.77E+04
SR-89	4.34E+05	0.00E+00	1.25E+04	0.00E+00	0.00E+00	2.42E+06	3.71E+05
Y-90	2.98E+03	0.00E+00	8.00E+01	0.00E+00	0.00E+00	2.93E+05	5.59E+05
SR-90	3.31E+07	0.00E+00	6.66E+05	0.00E+00	0.00E+00	1.65E+07	7.65E+05
ZR-95	1.46E+05	4.58E+04	3.15E+04	0.00E+00	6.74E+04	2.69E+06	1.49E+05
NB-95	1.86E+04	1.03E+04	5.66E+03	0.00E+00	1.00E+04	7.51E+05	9.68E+04
RU-103	2.10E+03	0.00E+00	8.96E+02	0.00E+00	7.43E+03	7.83E+05	1.09E+05
RU-106	9.84E+04	0.00E+00	1.24E+04	0.00E+00	1.90E+05	1.61E+07	9.60E+05
AG-110M	1.38E+04	1.31E+04	7.99E+03	0.00E+00	2.50E+04	6.75E+06	2.73E+05
SB-124	4.30E+04	7.94E+02	1.68E+04	9.76E+01	0.00E+00	3.85E+06	3.98E+05
SB-125	7.38E+04	8.08E+02	1.72E+04	7.04E+01	0.00E+00	2.74E+06	9.92E+04
TE-129M	1.39E+04	6.58E+03	2.25E+03	4.58E+03	5.19E+04	1.98E+06	4.05E+05
I-131	3.54E+04	4.91E+04	2.64E+04	1.46E+07	8.40E+04	0.00E+00	6.49E+03
I-133	1.22E+04	2.05E+04	6.22E+03	2.92E+06	3.59E+04	0.00E+00	1.03E+04
CS-134	5.02E+05	1.13E+06	5.49E+05	0.00E+00	3.75E+05	1.46E+05	9.76E+03
CS-136	5.15E+04	1.94E+05	1.37E+05	0.00E+00	1.10E+05	1.78E+04	1.09E+04
CS-137	6.70E+05	8.48E+05	3.11E+05	0.00E+00	3.04E+05	1.21E+05	8.48E+03
BA-140	5.47E+04	6.70E+01	3.52E+03	0.00E+00	2.28E+01	2.03E+06	2.29E+05
CE-141	2.84E+04	1.90E+04	2.17E+03	0.00E+00	8.88E+03	6.14E+05	1.26E+05
CE-144	4.89E+06	2.02E+06	2.62E+05	0.00E+00	1.21E+06	1.34E+07	8.64E+05
ND-147	7.86E+03	8.56E+03	5.13E+02	0.00E+00	5.02E+03	3.72E+05	1.82E+05

[1] Dose factors are based upon NUREG 0133 methodology.

7520/601

TABLE 10.6.4

GRW DOSE PARAMETERS[1] FOR RADIOIODINES, RADIOACTIVE PARTICULATES, AND ANY RADIONUCLIDE OTHER THAN NOBLE GAS (IPT), GASEOUS EFFLUENTS (GRW), ADULT AGE GROUP, INHALATION PATHWAY ORGAN "O" (mrem/yr per μCi/m³) $R_{i,inhal}$

Nuclide	Bone	Liver	T Body	Thyroid	Kidney	Lung	GI-LLI
H-3	0.00E+00	7.18E+02	7.18E+02	7.18E+02	7.18E+02	7.18E+02	7.18E+02
CR-51	0.00E+00	0.00E+00	1.00E+02	5.95E+01	2.28E+01	1.44E+04	3.32E+03
MN-54	0.00E+00	3.96E+04	6.30E+03	0.00E+00	9.84E+03	1.40E+06	7.74E+04
FE-59	1.18E+04	2.78E+04	1.06E+04	0.00E+00	0.00E+00	1.02E+06	1.88E+05
CO-58	0.00E+00	1.58E+03	2.07E+03	0.00E+00	0.00E+00	9.28E+05	1.06E+05
CO-60	0.00E+00	1.15E+04	1.48E+04	0.00E+00	0.00E+00	5.97E+06	2.85E+05
ZN-65	3.24E+04	1.03E+05	4.66E+04	0.00E+00	6.90E+04	8.64E+05	5.34E+04
RB-86	0.00E+00	1.35E+05	5.90E+04	0.00E+00	0.00E+00	0.00E+00	1.66E+04
SR-89	3.04E+05	0.00E+00	8.72E+03	0.00E+00	0.00E+00	1.40E+06	3.50E+05
Y-90	2.09E+03	0.00E+00	5.61E+01	0.00E+00	0.00E+00	1.70E+05	5.06E+05
SR-90	2.87E+07	0.00E+00	5.77E+05	0.00E+00	0.00E+00	9.60E+06	7.22E+05
ZR-95	1.07E+05	3.44E+04	2.33E+04	0.00E+00	5.42E+04	1.77E+06	1.50E+05
NB-95	1.41E+04	7.82E+03	4.21E+03	0.00E+00	7.74E+03	5.05E+05	1.04E+05
RU-103	1.53E+03	0.00E+00	6.58E+02	0.00E+00	5.83E+03	5.05E+05	1.10E+05
RU-106	6.91E+04	0.00E+00	8.72E+03	0.00E+00	1.34E+05	9.36E+06	9.12E+05
AG-110M	1.08E+04	1.00E+04	5.94E+03	0.00E+00	1.97E+04	4.63E+06	3.02E+05
SB-124	3.12E+04	5.89E+02	1.24E+04	7.55E+01	0.00E+00	2.48E+06	4.06E+05
SB-125	5.34E+04	5.95E+02	1.26E+04	5.40E+01	0.00E+00	1.74E+06	1.01E+05
TE-129M	9.76E+03	4.67E+03	1.58E+03	3.44E+03	3.66E+04	1.16E+06	3.83E+05
I-131	2.52E+04	3.58E+04	2.05E+04	1.19E+07	6.13E+04	0.00E+00	6.28E+03
I-133	8.64E+03	1.48E+04	4.52E+03	2.15E+06	2.58E+04	0.00E+00	8.88E+03
CS-134	3.73E+05	8.48E+05	7.28E+05	0.00E+00	2.87E+05	9.76E+04	1.04E+04
CS-136	3.90E+04	1.46E+05	1.10E+05	0.00E+00	8.56E+04	1.20E+04	1.17E+04
CS-137	4.78E+05	6.21E+05	4.28E+05	0.00E+00	2.22E+05	7.52E+04	8.40E+03
BA-140	3.90E+04	4.90E+01	2.57E+03	0.00E+00	1.67E+01	1.27E+06	2.18E+05
CE-141	1.99E+04	1.35E+04	1.53E+03	0.00E+00	6.26E+03	3.62E+05	1.20E+05
CE-144	3.43E+06	1.43E+06	1.84E+05	0.00E+00	8.48E+05	7.78E+06	8.16E+05
ND-147	5.27E+03	6.10E+03	3.65E+02	0.00E+00	3.56E+03	2.21E+05	1.73E+05

[1] Dose factors are based upon NUREG 0133 methodology.

7528/692

TABLE 10.6.5

GRW DOSE PARAMETERS[1] FOR RADIOIODINES, RADIOACTIVE PARTICULATES, AND ANY RADIONUCLIDE OTHER THAN NOBLE GAS (IPT), GASEOUS EFFLUENTS (GRW), CHILD AGE GROUP, VEGETATION PATHWAY ORGAN "O" (mrem/yr per µCi/(sec m²)) $R_{i,l,o,a}$

Nuclide	Bone	Liver	T Body	Thyroid	Kidney	Lung	GI-LLI
H-3[2]	0.00E+00	2.29E+03	2.29E+03	2.29E+03	2.29E+03	2.29E+03	2.29E+03
CR-51	0.00E+00	0.00E+00	1.17E+05	6.49E+04	1.77E+04	1.18E+05	6.20E+06
MN-54	0.00E+00	6.65E+08	1.77E+08	0.00E+00	1.86E+08	0.00E+00	5.58E+08
FE-59	3.97E+08	6.42E+08	3.20E+08	0.00E+00	0.00E+00	1.86E+08	6.69E+08
CO-58	0.00E+00	6.45E+07	1.97E+08	0.00E+00	0.00E+00	0.00E+00	3.76E+08
CO-60	0.00E+00	3.78E+08	1.12E+09	0.00E+00	0.00E+00	0.00E+00	2.10E+09
ZN-65	8.12E+08	2.16E+09	1.35E+09	0.00E+00	1.36E+09	0.00E+00	3.80E+08
RB-86	0.00E+00	4.54E+08	2.79E+08	0.00E+00	0.00E+00	0.00E+00	2.92E+07
SR-89	3.59E+10	0.00E+00	1.03E+09	0.00E+00	0.00E+00	0.00E+00	1.39E+09
Y-90	2.31E+04	0.00E+00	6.18E+02	0.00E+00	0.00E+00	0.00E+00	6.57E+07
SR-90	1.87E+12	0.00E+00	3.77E+10	0.00E+00	0.00E+00	0.00E+00	1.67E+10
ZR-95	3.86E+06	8.50E+05	7.56E+05	0.00E+00	1.22E+06	0.00E+00	8.86E+08
NB-95	4.12E+05	1.61E+05	1.15E+05	0.00E+00	1.51E+05	0.00E+00	2.97E+08
RU-103	1.53E+07	0.00E+00	5.89E+06	0.00E+00	3.86E+07	0.00E+00	3.96E+08
RU-106	7.45E+08	0.00E+00	1.30E+07	0.00E+00	1.01E+09	0.00E+00	1.16E+10
AG-110M	3.21E+07	2.17E+07	1.74E+07	0.00E+00	4.04E+07	0.00E+00	2.58E+09
SB-124	3.52E+08	4.57E+06	1.23E+08	7.78E+05	0.00E+00	1.96E+08	2.20E+09
SB-125	4.99E+08	3.85E+06	1.05E+08	4.62E+05	0.00E+00	2.78E+08	1.19E+09
TE-129M	8.40E+08	2.35E+08	1.30E+08	2.71E+08	2.47E+09	0.00E+00	1.02E+09
I-131	1.43E+08	1.44E+08	8.17E+07	4.75E+10	2.36E+08	0.00E+00	1.28E+07
I-133	3.52E+06	4.36E+06	1.65E+06	8.09E+08	7.26E+06	0.00E+00	1.76E+06
CS-134	1.60E+10	2.63E+10	5.55E+09	0.00E+00	8.16E+09	2.93E+09	1.42E+08
CS-136	8.18E+07	2.25E+08	1.46E+08	0.00E+00	1.20E+08	1.79E+07	7.90E+06
CS-137	2.39E+10	2.29E+10	3.38E+09	0.00E+00	7.46E+09	2.68E+09	1.43E+08
BA-140	2.77E+08	2.43E+05	1.62E+07	0.00E+00	7.90E+04	1.45E+05	1.40E+08
CE-141	6.55E+05	3.27E+05	4.85E+04	0.00E+00	1.43E+05	0.00E+00	4.08E+08
CE-144	1.27E+08	3.98E+07	6.78E+06	0.00E+00	2.21E+07	0.00E+00	1.04E+10
ND-147	7.27E+04	5.89E+04	4.56E+03	0.00E+00	3.23E+04	0.00E+00	9.33E+07

1. Dose factors are based upon NUREG 0133 methodology.
2. For Tritium the units of the dose parameters are mrem yr per µCi m³ for all pathways, and they must be multiplied by X/Q.

TABLE 10.6.6

GRW DOSE PARAMETERS[1] FOR RADIOIODINES, RADIOACTIVE PARTICULATES, AND ANY RADIONUCLIDE OTHER THAN NOBLE GAS (IPT), GASEOUS EFFLUENTS (GRW), TEEN AGE GROUP, VEGETATION PATHWAY ORGAN "O" (mrem/yr per µCi/(sec m²)) $R_{i,t,o}$

Nuclide	Bone	Liver	T Body	Thyroid	Kidney	Lung	GI-LLI
H-3[2]	0.00E+00	1.47E+03	1.47E+03	1.47E+03	1.47E+03	1.47E+03	1.47E+03
CR-51	0.00E+00	0.00E+00	6.16E+04	3.42E+04	1.35E+04	8.79E+04	1.03E+07
MN-54	0.00E+00	4.54E+08	9.01E+07	0.00E+00	1.36E+08	0.00E+00	9.32E+08
FE-59	1.79E+08	4.18E+08	1.61E+08	0.00E+00	0.00E+00	1.32E+08	9.89E+08
CO-58	0.00E+00	4.37E+07	1.01E+08	0.00E+00	0.00E+00	0.00E+00	6.02E+08
CO-60	0.00E+00	2.49E+08	5.60E+08	0.00E+00	0.00E+00	0.00E+00	3.24E+09
ZN-65	4.24E+08	1.47E+09	6.86E+08	0.00E+00	9.41E+08	0.00E+00	6.23E+08
RB-86	0.00E+00	2.75E+08	1.29E+08	0.00E+00	0.00E+00	0.00E+00	4.06E+07
SR-89	1.51E+10	0.00E+00	4.33E+08	0.00E+00	0.00E+00	0.00E+00	1.80E+09
Y-90	1.24E+04	0.00E+00	3.35E+02	0.00E+00	0.00E+00	0.00E+00	1.02E+08
SR-90	9.22E+11	0.00E+00	1.84E+10	0.00E+00	0.00E+00	0.00E+00	2.11E+10
ZR-95	1.72E+06	5.44E+05	3.74E+05	0.00E+00	7.99E+05	0.00E+00	1.26E+09
NB-95	1.93E+05	1.07E+05	5.90E+04	0.00E+00	1.04E+05	0.00E+00	4.58E+08
RU-103	6.82E+06	0.00E+00	2.91E+06	0.00E+00	2.40E+07	0.00E+00	5.69E+08
RU-106	3.09E+08	0.00E+00	3.90E+07	0.00E+00	5.97E+08	0.00E+00	1.48E+10
AG-110M	1.52E+07	1.44E+07	8.73E+06	0.00E+00	2.74E+07	0.00E+00	4.03E+09
SB-124	1.55E+08	2.85E+06	6.03E+07	3.51E+05	0.00E+00	1.35E+08	3.11E+09
SB-125	2.14E+08	2.34E+06	5.01E+07	2.05E+05	0.00E+00	1.88E+08	1.67E+09
TE-129M	3.61E+08	1.34E+08	5.72E+07	1.17E+08	1.51E+09	0.00E+00	1.36E+09
I-131	7.68E+07	1.08E+08	5.78E+07	3.14E+10	1.85E+08	0.00E+00	2.13E+07
I-133	1.93E+06	3.28E+06	1.00E+06	4.58E+08	5.75E+06	0.00E+00	2.48E+06
CS-134	7.10E+09	1.67E+10	7.75E+09	0.00E+00	5.31E+09	2.03E+09	2.08E+08
CS-136	4.35E+07	1.71E+08	1.15E+08	0.00E+00	9.31E+07	1.47E+07	1.38E+07
CS-137	1.01E+10	1.35E+10	4.69E+09	0.00E+00	4.59E+09	1.78E+09	1.92E+08
BA-140	1.38E+08	1.69E+05	8.90E+06	0.00E+00	5.74E+04	1.14E+05	2.13E+08
CE-141	2.83E+05	1.89E+05	2.17E+04	0.00E+00	8.89E+04	0.00E+00	5.40E+08
CE-144	5.27E+07	2.18E+07	2.83E+06	0.00E+00	1.30E+07	0.00E+00	1.33E+10
ND-147	3.67E+04	4.00E+04	2.39E+03	0.00E+00	2.35E+04	0.00E+00	1.44E+08

[1] Dose factors are based upon NUREG 0133 methodology

[2] For Tritium the units of the dose parameters are mrem/yr per µCi/m³ for all pathways, and they must be multiplied by X/Q

TABLE 10.6.7

GRW DOSE PARAMETERS[1] FOR RADIOIODINES, RADIOACTIVE PARTICULATES, AND ANY RADIONUCLIDE OTHER THAN NOBLE GAS (IPT), GASEOUS EFFLUENTS (GRW), ADULT AGE GROUP, VEGETATION PATHWAY ORGAN "O"(mrem/yr per µCi/(sec m²)) $R_{i,Vegi}$

Nuclide	Bone	Liver	T Body	Thyroid	Kidney	Lung	GI-LLI
H-3[2]	0.00E+00	1.29E+03	1.29E+03	1.29E+03	1.29E+03	1.29E+03	1.29E+03
CR-51	0.00E+00	0.00E+00	4.64E+04	2.77E+04	1.02E+04	6.15E+04	1.17E+07
MN-54	0.00E+00	3.13E+08	5.97E+07	0.00E+00	9.31E+07	0.00E+00	9.58E+08
FE-59	1.26E+08	2.96E+08	1.13E+08	0.00E+00	0.00E+00	8.27E+07	9.87E+08
CO-58	0.00E+00	3.08E+07	6.90E+07	0.00E+00	0.00E+00	0.00E+00	6.24E+08
CO-60	0.00E+00	1.67E+08	3.69E+08	0.00E+00	0.00E+00	0.00E+00	3.14E+09
ZN-65	3.17E+08	1.01E+09	4.56E+08	0.00E+00	6.75E+08	0.00E+00	6.36E+08
RB-86	0.00E+00	2.20E+08	1.03E+08	0.00E+00	0.00E+00	0.00E+00	4.34E+07
SR-89	9.95E+09	0.00E+00	2.86E+08	0.00E+00	0.00E+00	0.00E+00	1.60E+09
Y-90	1.33E+04	0.00E+00	3.57E+02	0.00E+00	0.00E+00	0.00E+00	1.41E+08
SR-90	6.95E+11	0.00E+00	1.40E+10	0.00E+00	0.00E+00	0.00E+00	1.75E+10
ZR-95	1.18E+06	3.77E+05	2.55E+05	0.00E+00	5.92E+05	0.00E+00	1.20E+09
NB-95	1.43E+05	7.95E+04	4.27E+04	0.00E+00	7.86E+04	0.00E+00	4.83E+08
RU-103	4.77E+06	0.00E+00	2.05E+06	0.00E+00	1.82E+07	0.00E+00	5.57E+08
RU-106	1.93E+08	0.00E+00	2.44E+07	0.00E+00	3.72E+08	0.00E+00	1.25E+10
AG-110M	1.05E+07	9.75E+06	5.79E+06	0.00E+00	1.92E+07	0.00E+00	3.98E+09
SB-124	1.04E+08	1.96E+06	4.11E+07	2.52E+05	0.00E+00	8.08E+07	2.95E+09
SB-125	1.37E+08	1.53E+06	3.25E+07	1.39E+05	0.00E+00	1.05E+08	1.50E+09
TE-129M	2.51E+08	9.37E+07	3.97E+07	8.62E+07	1.05E+09	0.00E+00	1.26E+09
I-131	8.07E+07	1.15E+08	6.62E+07	3.78E+10	1.98E+08	0.00E+00	3.05E+07
I-133	2.08E+06	3.62E+06	1.10E+06	5.32E+08	6.31E+06	0.00E+00	3.25E+06
CS-134	4.67E+09	1.11E+10	9.08E+09	0.00E+00	3.59E+09	1.19E+09	1.94E+08
CS-136	4.25E+07	1.68E+08	1.21E+08	0.00E+00	9.33E+07	1.28E+07	1.90E+07
CS-137	6.36E+09	8.70E+09	5.70E+09	0.00E+00	2.95E+09	9.81E+08	1.68E+08
BA-140	1.29E+08	1.61E+05	8.42E+06	0.00E+00	5.49E+04	9.24E+04	2.65E+08
CE-141	1.97E+05	1.33E+05	1.51E+04	0.00E+00	6.19E+04	0.00E+00	5.09E+08
CE-144	3.29E+07	1.38E+07	1.77E+06	0.00E+00	8.16E+06	0.00E+00	1.11E+10
ND-147	3.37E+04	3.90E+04	2.33E+03	0.00E+00	2.28E+04	0.00E+00	1.87E+08

1 Dose factors are based upon NUREG 0133 methodology.

2 For Tritium the units of the dose parameters are mrem yr per µCi/m³ for all pathways, and they must be multiplied by X/Q.

Attachment 3

Off-Site Dose Calculation Procedure (ODCP) (CAP A-8 Revision 23A)

TITLE: OFF-SITE DOSE CALCULATIONS

05/25/99
EFFECTIVE DATE

PROCEDURE CLASSIFICATION: QUALITY RELATED

TABLE OF CONTENTS

SECTION PAGE

SCOPE 2
DISCUSSION 3
RESPONSIBILITIES 3
PREREQUISITES 3
PRECAUTIONS 3
INSTRUCTIONS 4
Liquid Effluents 4
Liquid Effluents - Dose Calculation 4
10 CFR 20, Appendix B, Table 2, Column 2, Effluent (liquid) Concentration Limit (ECL) Calculation 6
Liquid Effluent Radiation Monitor Set Point Methodology 7
Dose Projection (for Liquid Effluents) 13
Liquid Limiting Flow Rate Methodology - ECL Based 15
Liquid Limiting Flow Rates - LLD Based 16
Gaseous Effluents 18
Plant Vent Noble Gas Monitor - RE-14 HASP 21
Containment Purge - RE-44 HASP 28
Dose To Critical Receptor Due To Radioiodines, Tritium and Particulates Released in Gaseous Effluents 34
40 CFR 190 Dose Calculations 42
ACCEPTANCE CRITERIA 47
REFERENCES 47
RECORDS 47
APPENDICES 48
ATTACHMENTS 48
SPONSOR 48

Table 6.1 - Typical Liquid Effluent Discharge Pathway Allocation Factors 8
Table 6.2 - Typical Gaseous Effluent Discharge Pathway Allocation Factors 20
Table 6.3 - Expected On-Site Distance and Visitation Times for Members of the Public 46
Figure 6.1 - Liquid Discharges (LRW) Monitored for Radioactivity 49
Figure 6.2 - Gaseous Discharges (GRW) Monitored for Radioactivity 50

1. SCOPE

This procedure describes the methodology for the following:

Effluent Type	RECP or Tech Spec	RECP or Tech Spec Surveillance Requirement	Implements
Liquids	6.1.1.1 (RECP) 6.1.3.1 (RECP)	Determination of alarm/trip setpoints for RE-18, RE-23, and RE-3	10 CFR 20 App. B Table 2, Col. 2
Gases	6.1.2.1 (RECP) 6.1.6.1 (RECP)	Determination of alarm/trip setpoints for RE-22, RE-14, and RE-14R	NUREG 0133
Liquids	6.1.3.2 (RECP) 6.1.3.3 (RECP)	Prerelease analyses of effluents Postrelease analysis of effluents	10 CFR 20 App. B Table 2, Col. 2
Liquids	6.1.4.2 (RECP)	Dose calculations	10 CFR 50 App. I
Liquids	6.1.5.2 (RECP)	Dose projections	10 CFR 50 App. I
Gases	6.1.6.2	Dose Rate calculations, Noble Gases, Total Body and Skin	NUREG 0133
Gases	6.1.6.3	Dose Rate calculations, Iodines, Particulates and Radionuclides other than Noble Gases, per organ, per age group	NUREG 0133
Gases	6.1.7.2 (RECP)	Noble Gas Air Dose Calculations	10 CFR 50 App. I
Gases	6.1.8.2 (RECP)	Iodines, Particulates, and Radionuclides other than Noble Gases Organ Dose Calculations per age group	10 CFR 50 App. I
Gases	6.1.9.2 (RECP)	Noble Gases, Iodines, Particulates, and Radionuclides other than Noble Gases, Dose Projection	10 CFR 50 App. I
Liquids and Gases	6.1.10.2 (RECP) 4.4.2.b.1 (RECP)	Cumulative Dose from: Liquids, Noble Gases, Iodines, Particulates, and Radionuclides other than Noble Gases per age group, per organ	40 CFR 190
Direct Radiation	6.1.10.3 (RECP)	Direct Radiation Dose Rate and Dose Calculations to unrestricted areas due to plant and high radwaste storage sky-shine	40 CFR 190

The calculational methodology for doses are based on models and data that make it unlikely to substantially underestimate the actual exposure of an individual through any of the appropriate pathways. Tables containing the values for the various parameters used in these expressions are also included.

2. DISCUSSION

This procedure is used in support of the Radiological Monitoring and Controls Program (RMCP), and Radioactive Effluent Controls Program (RECP), and the portion that deals with routine radioactive liquid and gaseous releases to the unrestricted area. Limits are based on the dose commitment to a member of the general public related to the release of radionuclides through either direct or indirect exposure (e.g., submersion in a cloud of radioactive Noble Gases, radionuclides deposited on the ground, direct radiation from radionuclides stored on-site, inhalation of radionuclides or ingestion of radionuclides via a food pathway such as milk, meat, vegetable or fish, etc.).

Further, the conduct of the Environmental Radiological Monitoring Procedure (ERMP) is found in RP1.ID11.

3. RESPONSIBILITIES

3.1 The Director, Chemistry is the overseeing authority of responsibility for ensuring that the off-site dose calculational procedure (ODCP) meets all RECP and Tech Spec requirements with regards to calculated doses delivered by the plant to the unrestricted area surrounding the site.

3.2 The Senior Radiochemistry Engineer assumes the overall responsibility for ensuring that this procedure's program is followed and implemented where appropriate, especially in regards to RECP or Tech Spec requirements.

3.3 The Radiochemistry Effluents Engineer has the responsibility of correct and timely implementation of all the procedure's calculational methodology, where appropriate, for each radioactive effluent released. Furthermore this engineer is responsible for: reviewing the results; cross (spot) checking the calculations; and maintaining an updated archive of post release calculated doses for annual report purposes.

3.4 The Senior Engineer Tech Maintenance Computer Group assures that any supporting computer software is maintained current and compatible with the procedure's calculational methodology and that the computer hardware is maintained operable at all times.

3.5 The Radiochemistry staff engineer provides an oversight of the effluents program's ODCP to: confirm compliance with RECP or Tech Specs; provide technical support; recommend or design improvements to the dose calculational methodology and the effluent program control; and investigate long-term planning toward effluent related activities and their associated dose calculations.

3.6 Responsibilities as described in CY1, " Chemistry and Radiochemistry," and CY1.DC1, "Analytical Data Processing Responsibilities," apply.

4. PREREQUISITES

Not Applicable

5. PRECAUTIONS

Not Applicable

6. INSTRUCTIONS

6.1 Liquid Effluents

6.1.1 Liquid Effluents - Dose Calculation

The dose contributions to the total body and each individual organ (bone, liver, thyroid, kidney, lung and GI-LLI) of the maximum exposed individual (adult) due to consumption of saltwater fish and saltwater invertebrate is calculated for all radionuclides identified in liquid effluents released to unrestricted areas using the following expression:

$$D_o = F_\ell \, \Delta t \sum_i A_{io} C_i \, e^{-\lambda_i t_m} \qquad (1)$$

Where:

D_o = The dose commitment to organ, o, in mrem.

F_ℓ = Near field average dilution factor during the period of the release. It is defined as:

$$F_\ell = \frac{\text{Waste Flow}}{\text{Dilution Flow} \times Z} \qquad (2)$$

Where:

Z = Z is the site specific factor for the mixing effect of the discharge structure. Specifically, it is the credit taken for dilution which occurs between the discharge structure and the body of water which contaminates fish or invertebrates in the liquid ingestion pathway. For DCPP Z = 5.

Δt = The time period for the release in hours.

A_{io} = The site specific ingestion dose commitment factor to organ, o, due to radionuclide, i, in mrem/hr per µCi/ml as defined by Equation 3.

C_i = Concentration of radionuclide, i, in the undiluted liquid effluent, in µCi/ml.

λ_i = Decay constant of radionuclide, i.

t_m = Time interval between end of sampling and midpoint of release.

The site specific ingestion dose commitment factor, A_{io}, is defined as:

$$A_{io} = k_o \left(U_F BF_i + U_I BI_i\right) DF_i \quad (3)$$

Where:

k_o = Units conversion factor of 1.14×10^5 in units of $\rho Ci/\mu Ci \times ml/l \times yr/hr$.

U_F = Saltwater fish consumption rate in kilograms of fish per year. DCPP value for this parameter is 21 kg/yr and is taken from NUREG 0133, Section 4.3.1.

BF_i = Saltwater bioaccumulation factor for nuclide, i, in fish flesh in units of ρCi/Kg per ρCi/l. Values for BF_i are taken from Table A-1 of Reg. Guide 1.109.

U_I = Saltwater invertebrate consumption rate in kilograms per years. DCPP value for this parameter is 5 kg/yr and is taken from NUREG 0133, Section 4.3.1.

BI_i = Saltwater bioaccumulation factor for nuclide, i, in invertebrate flesh in units of ρCi/Kg per ρCi/l. Values for BI_i are taken from Table A-1 of Reg. Guide 1.109.

DF_i = Adult ingestion dose conversion factor for nuclide, i, in mrem per pCi ingested, from Table E-11 of Regulatory Guide 1.109, with the following exceptions: H-3, Br-82, Sb-124 and Sb-125 ingestion dose conversion factors are taken from NUREG/CR-4013. As-76, Sn-113, Sn-117m and Sb-122 ingestion dose conversion factors were calculated by ORNL using ICRP-2 methodology.

The site specific values for A_{io} are listed in Table 10.1.

Units 1 and 2 share a common liquid radwaste (LRW) treatment system. The effluent doses due to releases discharged via the common LRW are apportioned between the units with 50% credited to Unit 1 and 50% credited to Unit 2.

6.1.2 10 CFR 20, Appendix B, Table 2, Column 2, Effluent (liquid) Concentration Limit (ECL) Calculation

a. The ECL for the identified mixture of radionuclides in the "j^{th}" batch of liquids is calculated as follows:

$$ECL_j = \frac{\sum_{i=1}^{n} C_{ij}}{\sum_{i=1}^{n} \frac{C_{ij}}{ECL_{ij}}} \qquad (4)$$

Where:

ECL_j = The unrestricted area total undiluted ECL for the "j^{th}" particular mixture of identified radionuclides, in µCi/ml.

C_{ij} = The concentration of radionuclide "i," in µCi/ml for the "j^{th}" mixture.

ECL_{ij} = The ECL in unrestricted area water for radionuclide "i," in general, in µCi/ml (from 10 CFR 20, Appendix B, Table 2, Column 2).

b. The overall ECL for simultaneous discharges is given by Equation 5.

$$ECL_{overall} = \frac{\sum_{j=1}^{n} \Phi_j C_j}{\sum_{j=1}^{n} \frac{\Phi_j C_j}{ECL_j}} \quad (5)$$

Where:

$ECL_{overall}$ = The unrestricted area ECL for the current radionuclide mixture for concurrent "j" discharges (in µCi/ml).

C_j = The total activity concentration for the "j^{th}" individual stream in µCi/ml.

ECL_j = The total ECL for the "j^{th}" individual mixture (or stream) determined as defined in Equation 4, in µCi/ml.

Φ_j = The ratio of an individual discharge "j^{th}" pathway flowrate to the sum total of all individual undiluted pathway flowrates as defined by:

$$\Phi_j = \frac{f_j}{\sum_j f_j} \quad (6)$$

Where:

f_j = Undiluted effluent flowrate for pathway, "j".

6.1.3 Liquid Effluent Radiation Monitor Set Point Methodology

a. Introduction

The DCPP radiological effluent controls program requires that the liquid effluent monitors be operable with their alarm/trip set points set to ensure that the effluent concentration limits of 10 CFR 20 are not exceeded.

The alarm/trip set point for the liquid effluent radiation monitors is derived from the concentration limit set forth in Appendix B, Table 2, Column 2 of 10 CFR 20.1001-2404.

The alarm/trip set points are applied at the unrestricted area boundary. The set points take into account appropriate factors for dilution, dispersion, or decay of radioactive materials that may occur between the point of discharge and the unrestricted area boundary.

b. Allocation and Safety Factors

The limits of RECP 6.1.3.1 are site limits which require that the set point methodology must ensure simultaneous releases do not exceed the liquid effluent concentration limits of 10 CFR 20 in the unrestricted area. The DCPP High Alarm Set Point (HASP) methodology makes use of an Allocation Factor (AF) to limit the effluent concentrations from simultaneous liquid discharges. The Allocation Factors can be adjusted based upon operational requirements with the restriction that the sum of the Allocation Factors must be less than or equal to 1.

Typical Allocation Factors are shown Table 6. 1.

Table 6. 1

Typical Liquid Effluent Discharge Pathway Allocation Factors

Discharge Pathway	Rad Monitor	Allocation Factor (AF)
Oily Water Separator	RE-3	0.01
Liquid Radwaste System	RE-18	0.90
Steam Generator Blow Down (Unit 1)	RE-23 (U1)	0.04
Steam Generator Blow Down (Unit 2)	RE-23 (U2)	0.04
Miscellaneous	none	0.01

An additional level of conservatism in the HASP methodology is implemented by the use of a Safety Factor (SF). The Safety Factor is defined as 0.9 and provides for a High Alarm Set Point at 90% of the 10 CFR 20 concentration limits.

c. Tritium Correction Factor

As result of an aggressive liquid radwaste treatment program, the liquid effluents at DCPP typically contain very low levels of gamma emitters. In order to reduce the over all volume of liquid waste discharged, DCPP also recycles waste water. This recycling results in higher tritium concentration in liquid effluents when compared with the low gamma emitter concentrations. As a result, standard HASP methodology results in very low set points. In some cases the calculated set points are barely above the monitor background.

The liquid HASP methodology used by DCPP uses a Tritium Correction Factor (TCF) which assumes a constant, but conservative tritium concentration in the liquid effluent. This results in an operationally reasonable set point while ensuring that the liquid effluent concentrations released to the unrestricted areas do not exceed the limits of 10 CFR 20.

The Tritium Correction Factor is defined as shown in Equation 7.

$$TCF = \left[1-\left(\frac{C_{H3}/ECL_{H3}}{F/f}\right)\right] \quad (7)$$

Where:

ECL_{H3}	=	effluent concentration limit of tritium
C_{H3}	=	concentration of tritium in the release mix, pre-dilution (μCi/ml)
F	=	conservative dilution flow rate (gpm)
f	=	conservative undiluted effluent flow rate (gpm)

The concentration of tritium, C_{H3}, is conservatively estimated.

d. Liquid Effluent Radiation Monitor Set Point Calculations

The High Alarm Set Point (HASP) are calculated to ensure that the liquid effluent concentration limits of 10 CFR 20 are not exceeded. The set points represent the maximum operational set point. The actual set point used by operations will be equal to or less than the actual value as determined by the HASP methodology described in this section.

1. Set Point Methodology for RE-3 HASP: Oily Water Separator

Under normal conditions, the Oily Water Separator stream does not contain any radioactive material. Only in the event that there is primary to secondary leakage does this become a potential liquid effluent discharge point. In order to insure that no unplanned or unmonitored releases take place by way of the Oily Water Separator, RE-3 serves to monitor the discharge even when no activity has been identified in the effluent. When no significant primary to secondary leakage is taking place or when no activity has been identified in the Oily Water Separator, the High Alarm Set Point for RE-3 is calculated as shown in Equation 8.

$$HASP_{RE-3} = 3 \times BKGD_{RE-3} \quad (8)$$

In the event that primary to secondary leakage results in activity being detected in the Oily Water Separator, Equation 9 will be used to calculate a High Alarm Set Point value. The greater HASP value as determined by Equation 8 or Equation 9 will be used.

$$HASP_{RE-3} = BKGD_{RE-3} + (AF)(SF) \times \sum_{\gamma} k_{\gamma} C_{\gamma} \left[\frac{F/f}{\sum_{i \neq H3} C_i / ECL_i} \right] \times TCF \quad (9)$$

Where:

$HASP_{RE-3}$ = high alarm setpoint for RE-3 (cpm)

$BKGD_{RE-3}$ = background reading for RE-3 (cpm)

(AF) = allocation factor for the oily water separator effluent system from Table 6. 1 (0.01)

(SF) = safety factor for RE-3 (0.9)

k_{γ} = monitor response factor (cpm/μCi/ml)

C_{γ} = concentration of gamma emitting isotopes in the release mix, pre-dilution (μCi/ml)

F = dilution flow rate (gpm)

f = undiluted effluent flow rate (gpm)

C_i = concentration of isotope "i," in the release mix, pre-dilution (μCi/ml)

ECL_i = effluent concentration limit of isotope "i"

TCF = tritium correction factor as defined by Equation 7.

2. Set Point Methodology for RE-18 HASP: Liquid Radwaste System

The High Alarm Set Point for the RE-18 Liquid Radwaste System liquid effluent radiation monitor is calculated as shown in Equation 10.

$$HASP_{RE-18} = BKGD_{RE-18} + (AF)(SF) \times \sum_{\gamma} k_{\gamma} C_{\gamma} \left[\frac{F/f}{\sum_{i \neq H3} C_i / ECL_i} \right] \times TCF \quad (10)$$

Where:

$HASP_{RE-18}$ = high alarm setpoint for RE-18 (cpm)

$BKGD_{RE-18}$ = background reading for RE-18 (cpm)

(AF) = allocation factor for the liquid radwaste effluent system from Table 6. 1 (0.9)

(SF) = safety factor for RE-18 (0.9)

k_{γ} = monitor response factor (cpm/μCi/ml)

C_{γ} = concentration of gamma emitting isotopes in the release mix, pre-dilution (μCi/ml)

F = dilution flow rate (gpm)

f = undiluted effluent flow rate (gpm)

C_i = concentration of isotope "i," in the release mix, pre-dilution (μCi/ml)

ECL_i = effluent concentration limit of isotope "I"

TCF = tritium correction factor as defined by Equation 7.

3. Set Point Methodology for RE-23 HASP: Steam Generator Blowdown Tank

The High Alarm Set Point for the RE-23, Steam Generator Blowdown Tank liquid effluent radiation monitor, is calculated as shown in Equation 11.

$$HASP_{RE-23} = BKGD_{RE-23} + (AF)(SF) \times \sum_{\gamma} k_{\gamma} C_{\gamma} \left[\frac{F/f}{\sum_{i \neq H3} C_i / ECL_i} \right] \times TCF \quad (11)$$

Where:

$HASP_{RE-23}$ = high alarm setpoint for RE-23 (cpm)

$BKGD_{RE-23}$ = background reading for RE-23 (cpm)

(AF) = allocation factor for the steam generator blowdown effluent system for each unit from Table 6. 1 (0.04)

(SF) = safety factor for RE-23 (0.9)

k_{γ} = monitor response factor (cpm/μCi/ml)

C_{γ} = concentration of gamma emitting isotopes in the release mix, pre-dilution (μCi/ml)

F = dilution flow rate (gpm)

f = undiluted effluent flow rate (gpm)

C_i = concentration of isotope "i," in the release mix, pre-dilution (μCi/ml)

ECL_i = effluent concentration limit of isotope "i"

TCF = tritium correction factor as defined by Equation 7.

6.1.4 Dose Projection (for Liquid Effluents)

The projected dose contributions from each reactor unit due to liquid effluents for the current calendar month, quarter and current calendar year must be determined in accordance with the methodology and parameters in the ODCP at least every 31 days.

The purpose of this is to determine if appropriate treatment of liquid radioactive materials in relation to maintaining releases "as low as reasonably achievable," is necessary.

Projections will be made, at least by the end of each month with attention to the frequency requirement contained in the radiological effluent controls program.

The projected dose from each reactor unit is given by:

$$D_P = D_{P,U} + \tfrac{1}{2} D_{P,Com} \qquad \textbf{(12)}$$

Where:

D_P = Projected Dose.

$D_{P,U}$ = Projected dose attributed to reactor unit, U.

$D_{P,Com}$ = Projected dose common to both reactor units.

The 31-day projected dose is calculated by Equation 13.

$$D_P^M = 31 \times \frac{D_A^{PM} + d_A^{CM} + d_P^{CB}}{(T+t)} \qquad \textbf{(13)}$$

Where:

D_P^M = Monthly Projected Dose

D_A^{PM} = Previous Month's Actual Dose

d_A^{CM} = Current Month Actual Dose to date

d_P^{CB} = Projected Dose from Current Batch Release

T = Number of days in the previous month

t = Number of days into the present month

Projected quarterly doses are determined by Equation 14.

$$D_P^{CQ} = d_A^{CQ} + (92 - t)\frac{D_A^{PQ} + d_A^{CQ} + d_P^{CB}}{(T + t)} \quad \textbf{(14)}$$

Where:

D_P^{CQ}	=	Projected dose for the current calendar quarter.
d_A^{CQ}	=	Current quarter to date actual dose.
D_A^{PQ}	=	Previous quarter's actual dose.
d_P^{CB}	=	Projected dose as a result of the current batch release.
T	=	Number of days in the previous quarter.
t	=	Number of days into the present quarter.

Projected yearly doses are determined by Equation 15.

$$D_P^{CY} = d_A^{CY} + (366 - t)\frac{D_A^{PY} + d_A^{CY} + d_P^{CB}}{(T + t)} \quad \textbf{(15)}$$

Where:

D_P^{CY}	=	Projected dose for the current calendar year.
d_A^{CY}	=	Current year to date actual dose.
D_A^{PY}	=	Previous year's actual dose.
d_P^{CB}	=	Projected dose as a result of the current batch release.
T	=	Number of days in the previous year.
t	=	Number of days into the present year.

6.1.5 Liquid Limiting Flow Rate Methodology - ECL Based

The maximum effluent flow rate through monitors RE-3, RE-18, and RE-23 as well as for releases from the Condensate Demineralizer Regenerate waste tank or miscellaneous release points is established in order to provide further control over the effluent releases. The release rate limit is determined by the effluent concentration and the 10 CFR 20 Effluent Concentration Limits (ELCs) as shown in Equation 16.

$$f = \frac{F\,(AF)\,(SF)\,(TCF)}{\sum_{i \neq H-3} \frac{C_i}{ECL_i}} \qquad \textbf{(16)}$$

Where:

f	=	Maximum operational undiluted liquid radwaste effluent discharge flow rate (gpm)
F	=	Expected dilution flow rate (gpm)
AF	=	allocation factor for the liquid radwaste effluent source from Table 6. 1.
SF	=	safety factor (0.9).
TCF	=	tritium correction factor as defined by Equation 7.
C_i	=	concentration of isotopes "i" in the release mix, pre-dilution (μCi/ml)
ECL_i	=	effluent concentration limit of isotope "i" (μCi/ml)

When the term $\sum_{i \neq H-3} \frac{C_i}{ECL_i} = 0$ then the Limiting Flow Rate is calculated by:

$$f = F(AF)(SF)(TCF) \qquad \textbf{(17)}$$

Where the terms are as previously defined.

6.1.6 Liquid Limiting Flow Rates - LLD Based

When there is no primary to secondary leakage, the Oily Water Separator and various miscellaneous release points are assumed to be uncontaminated. Furthermore, in order to establish practical operational flow rate limits for any sources when they are considered uncontaminated, Equation 18 is used. While no activity may be present, Equation 18 assumes a concentration equal to the Lower Limit of Detection for the nuclides listed in CY2.ID1, Appendix 6.1, Table 6.1.3-1.

$$f = \frac{F(AF)(SF)}{4.3} \qquad \textbf{(18)}$$

Where:

f = Maximum operational undiluted liquid radwaste effluent discharge flow rate (gpm)

F = Expected dilution flow rate (gpm)

AF = allocation factor for the liquid radwaste effluent source from Table 6. 1.

SF = safety factor (0.9).

4.3 = Total ECL fraction as given by:

$$\sum_i \frac{LLD_i}{ECL_i}$$

Where:

LLD_i = Lower limit of detection for isotope "i" from CY2.ID1, Appendix 6.1, Table 6.1.3-1. (μCi/ml)

ECL_i = effluent concentration limit of isotope "i" (μCi/ml)

6.1.7 Unplanned Liquid Releases

An unplanned release is an unexpected and potentially unmonitored release to the environment due to operational error or equipment malfunctions.

a. Unmonitored unplanned releases shall have a report written by the Radiochemistry Effluents Engineer describing the event with a calculation, if possible, of the percent of Tech Spec release rate limit. This will then be forwarded to PSRC for review and then forwarded to NSOC for review.

b. Monitored unplanned releases which exceed 1% of the RECP release rate limit will also have a report written describing the event and must be forwarded to the PSRC for review, and then forwarded to NSOC for review.

c. Describe these unplanned releases in the Annual Radioactive Effluent Release Report. This report will also be forwarded to PSRC and NSOC for review.

6.2 Gaseous Effluents

The only significant path for gaseous radioactive releases to the environment during normal operations is via the plant vent. This source is used for calculating dose rates and real-time doses to the unrestricted area due to noble gases, vaporous radioiodines and airborne radio-particulates. The plant vent also has redundant monitoring for these types of gaseous releases.

Other paths such as the steam generator blowdown tank vent, the chemistry lab fume hood, the main condenser Nash vacuum pump discharge, hot machine shop vent, etc., are considered miscellaneous release sources. These miscellaneous release sources are not continuously monitored but can have dose rates and dose calculated for their path to the unrestricted area.

6.2.1 Meteorological Methodology

The equations for determining gaseous effluent concentration limits, high alarm setpoints, dose rates, and critical receptor doses make use of the historical average atmospheric conditions in accordance with methodologies of Regulatory Guides 1.109 and 1.111 and NUREGs 0133 and 0472. The historical average dispersion (χ/Q) and deposition (D/Q) values are derived from the methodology of Regulatory Guide 1.111 as implemented by NUREG 2019 (computer code XOQDOQ). The DCPP dispersion and deposition values are based on the latest five years of meteorological data and are updated when the value of χ/Q or D/Q changes by more than ten percent. The present values are listed in Table 10.2.

Long-term releases are characterized as those that are generally continuous and stable in release rate, such as normal ventilation systems effluents. Doses due to long-term releases are modeled using historical annual average dispersion and deposition values in accordance with the guidance of Regulatory Guide 1.109, Regulatory Guide 1.111, NUREG 0133 and NUREG 0472.

Short-term releases are defined as those which occur for a total of 500 hours or less in a calendar year but not more than 150 hours in any quarter. In accordance with NUREG 0133 and based upon an operational history that has demonstrated short term gaseous releases can be characterized as random in both time of day and duration, historical average atmospheric dispersion and deposition values are used to model doses due to short-term releases.

6.2.2 Gas Effluent Concentration Limits

a. Philosophy of Concentration Limits

The radiological effluent controls restrict at all times the dose rate due to radioactive materials released in gaseous effluents from the site to areas at or beyond the site boundary for noble gases to less than or equal to 500 mrem/yr to the total body and 3000 mrem/yr to the skin. For iodine-131, iodine-133, tritium and for all radionuclides in particulate form with half-lives greater than 8 days, the dose rate is limited to less than or equal to 1500 mrem/yr to any organ.

These dose rate limits act to restrict at all times the instantaneous concentrations of radionuclides in gaseous effluents at the site boundary.

1. Allocation and Safety Factors

The limits set forth by RECP 6.1.6.1 are site limits which require that the set point methodology must ensure simultaneous releases do not exceed the off-site dose rate limits set forth by RECP 6.1.6.1(a) and 6.1.6.1(b). The DCPP High Alarm Set Point methodology makes use of an Allocation Factor (AF) to limit the noble gas effluent dose rate from simultaneous atmospheric releases.

The Allocation Factors can be adjusted based upon operational requirements with the following restrictions:

The sum of the Allocation Factors for RE-14, the SGBD tank vents, and miscellaneous release points from both units must be less than or equal to 1.

The Allocation Factors for RE-22 (Waste Gas Decay Tanks) and RE-44 (Containment Purge) can also be adjusted based upon operational requirements with restriction that the sum of the Allocation Factors for RE-22 and RE-44 must be less than or equal to the Allocation Factor for RE-14.

The Allocation Factors for RE-24 (Plant Vent Iodine Monitor) and RE-28 (Plant Vent Particulate Monitor) are set equal to the Allocation Factor for RE-14.

Typical Allocation Factors are shown in Table 6. 2.

Table 6. 2

Typical Gaseous Effluent Discharge Pathway Allocation Factors

Discharge Pathway	Rad Monitor	Allocation Factor (AF)
Plant Vent - NG Monitor	RE-14	0.48
Plant Vent Iodine Monitor	RE-24	0.48
Plant Vent Part Monitor	RE-28	0.48
Waste Gas Decay Tank	RE-22	0.10
Containment Purge	RE-44	0.38
SGBD Tank Vent		0.01
Miscellaneous		0.01

An additional level of conservatism in the HASP methodology is implemented by the use of a Safety Factor (SF). The Safety Factor is defined as 0.9 and provides for a High Alarm Set Point at 90% of the dose rate limits.

b. Gaseous Effluent Radiation Monitor Set Points

1. **PLANT VENT NOBLE GAS MONITOR - RE-14 HASP**

The Plant Vent effluent stream is monitored by rad monitor RE-14. RE-14 provides alarm function only.
The High Alarm Set Point methodology for RE-14 is given by Equation 19.

$$^{14\,Max}C_T(NG) = AF \times SF \times \frac{500}{472 \times F_{pv} \times \left(\overline{\chi/Q}\right)_{Max} \times 294} \qquad \textbf{(19)}$$

Where:

$^{14Max}C_T(NG)$ = the maximum allowable total concentration of noble gas in the plant vent, in µCi/cc

AF = the allocation factor for the plant vent for one unit from Table 6. 2 (0.48)

SF = a safety factor to ensure that dose rate limits of the radiological effluent controls are not exceeded (0.9)

500 = (mrem/yr) the site Total Body dose rate limit for instantaneous releases

472 = the conversion constant to cc/sec from cfm

F_{pv} = total flow rate in the plant vent, in cfm (maximum plant vent flow rate is 263,000 cfm)

$\left(\overline{\chi/Q}\right)_{Max}$ = the maximum historical site boundary dispersion factor, based on 5 year averages derived from the meteorological data base, from Table 10.2.

294 = the whole body dose factor (mrem/yr/µCi/m^3) for Xe-133 as presented in Table 10.3, (for the plant vent HASP, the release is assumed to be all Xe-133)

2. PLANT VENT NOBLE GAS MONITOR - RE-14 SCALING

In order to correlate the readings of RE-14 to noble gas concentration during periods between samplings, the concentration is scaled according to Equation 20.

$$C_T = \frac{CPM_T}{CPM_S} \times C_S \qquad \textbf{(20)}$$

Where:

CPM_T = RE-14 time weighted arithmetic mean (cpm).

CPM_S = RE-14 gross count rate at the time of sampling (cpm).

C_S = Concentration of noble gas corresponding to CPM_S, based upon noble gas grab sample (μCi/cc).

C_T = Scaled concentration of noble gas (μCi/cc).

3. PLANT VENT IODINE MONITOR - RE-24

The Plant Vent Iodine concentration is monitored by rad monitor RE-24. RE-24 provides alarm function only. The alarm setpoint methodology is based upon the assumption that RE-24 responds only to I-131. The methodology also presumes a release mixture based upon the RCS source term.

The High Alarm Set Point methodology of RE-24 is given by Equation 21.

$$^{24Max}C_T(\text{Iodine}) = SF \times AF \times f_{I-131} \frac{1500}{472 \times F_{pv} \times \left(\overline{\chi/Q}\right)_{Max} \sum_i P_i^w f_i} \qquad (21)$$

Where:

$^{24\,Max}C_T(\text{Iodine})$ = the maximum allowable concentration of I-131 in the plant vent

AF = The allocation factor for the plant vent for one unit from Table 6. 2 (0.48)

SF = A safety factor to insure that the dose rate limits of the radiological effluent controls are not exceeded (0.9).

f_{I-131} = fraction of the total non-noble gas concentration that is due to I-131. Defined as:

$$f_{I-131} = \frac{C_{I-131}}{\sum_i C_i} \qquad (22)$$

1500 = (mrem/yr) the site organ dose rate limit for radioiodines and for all radioactive materials in particulate form and radionuclides other than noble gases with half-lives greater than 8 days.

472 = the conversion constant to cc/sec from cfm

F_{pv} = total flowrate in the plant vent, in cfm (maximum plant vent flowrate is 263,000 cfm)

$\left(\overline{\chi/Q}\right)_{Max}$ = maximum historical site boundary dispersion factor, based on 5 year averages derived from the meteorological database, from Table 10.2.

P_i^w = Inhalation dose factor for nuclide "i" (mrem/yr/μCi/m^3) for child age group for worst case organ, from Table 10.4. Dose factors are based upon NUREG 0133 methodology. Inhalation dose conversion factors are taken from Reg. Guide 1.109, Rev 1, Table E-9, with the following exceptions: H-3, Sb-124 and Sb-125 inhalation dose conversion factors taken from NUREG/CR-4013.

f_i = fraction of total non-noble gas concentration (excluding tritium) that is due to nuclide, i, and defined as:

$$f_i = \frac{C_i}{\sum_i C_i} \qquad (23)$$

4. PLANT VENT PARTICULATE MONITOR - RE-28

The Plant Vent Particulate concentration is monitored by rad monitor RE-28. The alarm setpoint methodology is based upon the assumption of a 5% cross talk from the iodine channel. This is due to the retention of a small portion of iodine on the particulate filter. A release mixture based upon the RCS source term is also assumed.

The High Alarm Set Point methodology for RE-28 is given by Equation 24.

$$^{28Max}C_T(\text{Particulates}) = AF \times SF \times \left(0.05 \times \sum_{\text{Iodines}} f_{\text{Iodines}} + \sum_{\text{Particulates}} f_{\text{Particulates}}\right) \times \frac{1500}{472 \times F_{pv} \times \left(\overline{\chi/Q}\right)_{Max} \sum_i P_i^w f_i} \quad (24)$$

Where:

$^{28\,Max}C_T$(Particulate)	=	Maximum allowable particulate concentration in the plant vent
AF	=	The allocation factor for the plant vent for one unit from Table 6. 2 (0.48)
SF	=	A safety factor to insure that the dose rate limits of the radiological effluent controls are not exceeded (0.9).
0.05	=	Fraction of total iodine activity retained on particulate filter.
$f_{Iodines}$	=	Fraction of the total non-noble gas concentration that is due to iodines.
$f_{Particulates}$	=	Fraction of the total non-noble gas concentration that is due to particulates.
1500	=	(mrem/yr) the site organ dose rate limit for radioiodines and for all radioactive materials in particulate form and radionuclides other than noble gases with half-lives greater than 8 days.
472	=	Conversion constant to cc/sec from cfm
F_{pv}	=	Total flowrate in the plant vent, in cfm (maximum plant vent flowrate is 263,000 cfm)

$\left(\overline{\chi/Q}\right)_{Max}$ = Maximum historical site boundary dispersion factor, based on 5 year averages derived from the meteorological database, from Table 10.2

P_i^w = Inhalation dose factor for nuclide "i" (mrem/yr/µCi/m3) for child age group for worst case organ, from Table 10.4. Dose factors are based upon NUREG 0133 methodology. Inhalation dose conversion factors are taken from Reg. Guide 1.109, Rev 1, Table E-9, with the following exceptions: H-3, Sb-124 and Sb-125 inhalation dose conversion factors taken from NUREG/CR-4013.

f_i = Fraction of total non-noble gas concentration (excluding tritium) that is due to nuclide, i, as defined by Equation 23.

5. **WASTE GAS DECAY TANK MONITOR - RE-22 HASP**

Effluent releases from the Waste Gas Decay Tank are monitored by rad monitor RE-22. RE-22 provides alarm and automatic release termination functions.

The High Alarm Set Point methodology for RE-22 is given by Equation 25.

$$^{22Max}C_T(NG) = AF \times SF \times \frac{3000}{472 \times F_{gdt} \times \left(\overline{\chi/Q}\right)_{Max} \times 1.34 \times 10^3} \qquad \textbf{(25)}$$

Where:

$^{22Max}C_T(NG)$ = the maximum allowable total concentration of noble gas in the gas decay tank exhaust line, in µCi/cc

AF = the allocation factor for the waste gas decay tank for one unit from Table 6. 2 (0.10)

SF = safety factor to ensure that dose rate limits of the radiological effluent controls are not exceeded (0.9)

3000 = (mrem/yr) the site Skin dose rate limit for instantaneous releases

472 = the conversion constant to cc/sec from cfm

F_{gdt} = maximum flow rate for the gas decay tank system (31 cfm)

$\left(\overline{\chi/Q}\right)_{Max}$ = the maximum historical site boundary dispersion factor, based on 5 year averages derived from the meteorological data base from Table 10.2.

1.34×10^3 = the skin dose factor for Kr-85 (mrem/yr/ μCi/m^3, from Table 10.3.

6. CONTAINMENT PURGE - RE-44 HASP

The Containment Purge is monitored by rad monitor RE-44. RE-44 provides alarm and automatic release termination functions.

The HASP for RE-44 must limit the noble gas dose rate for skin and total body exposure. In order to address this, two set points are calculated. One set point is calculated based upon limiting the total body dose rate and the other limits the skin dose rate. The more limiting set point is used. The High Alarm Set Point methodology for RE-44 is given by Equations 26 and 27.

a) Limiting Concentration Based on Total Body Dose

$$^{44A/BMax}C_T(NG) = AF \times SF \times \frac{500}{472 \times F_{ct} \times \left(\overline{\chi/Q}\right)_{Max} \times \sum K_i f_i(NG)} \quad \textbf{(26)}$$

Where:

$^{44A/BMax}C_T(NG)$ = the maximum allowable total concentration of noble gas in the containment purge exhaust line, in μCi/cc

AF = the allocation factor for the containment purge for one unit from Table 6. 2 (0.38)

SF = safety factor to ensure that dose rate limits of radiological effluent controls are not exceeded (0.9)

500 = (mrem/yr) the site Total Body dose rate limit for instantaneous releases

472 = the conversion constant to cc/sec from cfm

F_{ct} = maximum flow rate in the containment purge system (maximum containment purge flowrate is 55,000 cfm)

$\left(\overline{\chi/Q}\right)_{Max}$ = the maximum historical site boundary dispersion factor, based on 5 year averages derived from the meteorological data base averages, from Table 10.2.

K_i = whole body dose factor (mrem/yr/μCi/m^3) for isotope "i." Dose factors are presented in Table 10.3.

f_i = the fraction of the concentration of the individual noble gas radionuclide, "i," in the total mix of noble gas effluents in the containment purge line.

b) Limiting Concentration Based on Skin Dose

Skin dose should be calculated whenever an RCS sample contains a significant fraction of Kr-85.

The concentration limit calculated by this method should then be compared to the concentration limit calculated for total body dose. The smaller concentration should be selected as the limiting concentration for the HASP.

$$^{44A/BMax}C_T(NG) = AF \times SF \times \frac{3000}{472 \times F_{ct} \times \left(\overline{\chi/Q}\right)_{Max} \times \sum_i (L_i + 1.1 M_i)\, f_i(NG)} \qquad (27)$$

Where:

$^{44A/BMax}C_T(NG)$ = the maximum allowable total concentration of noble gas in the plant vent in μCi/cc

AF = the allocation factor for the containment purge for one unit from Table 6. 2 (0.38)

SF = safety factor to ensure that dose rate limits of the radiological effluent controls are not exceeded (0.9)

3000 = (mrem/yr) the site Total Body dose rate limit for instantaneous releases.

472 = the conversion constant to cc/sec from cfm

F_{ct} = total flow rate in the containment purge system, in cfm (maximum containment purge flow rate is 55,000 cfm)

$\left(\overline{\chi/Q}\right)_{Max}$ = the maximum historical site boundary dispersion factor, based on 5 year averages derived from the meteorological data base averages, from Table 10.2.

L_i = the skin dose factor (mrem/yr per $\mu Ci/m^3$) for isotope "i." Dose factors are presented in Table 10.3.

1.1 = Conversion factor mrem/mrad. Converts air dose to skin dose.

M_i = the beta dose factor (mrad/yr per $\mu Ci/m^3$) for isotope 'i." Dose factors are presented in Table 10.3.

f_i = the fraction of the concentration of the individual noble gas radionuclide, "i," in the total mix of noble gas effluents in the containment purge line.

c. Mode 6 Particulate activity.

The HASP calculation specified in this section based upon Noble Gas effluent limitations conservatively bounds the Tech. Spec. requirement for particulate activity in Mode 6. The FSAR expected case accident for Mode 6 is a containment fuel handling accident which does not include a particulate release. Therefore, the HASP for RM-44 in this section conservatively satisfies the Tech. Spec. (Ref.: 8.15)

6.2.3 Gaseous Dose Rate Calculation Methodology

a. Total Body Noble Gas Dose Rate Methodology

The dose rate to the total body due to immersion in a cloud of noble gases is given by:

$$\left(\overline{\chi/Q}\right)_{Max} \sum_i K_i \dot{Q}_i \leq 500 \text{ mrem / year} \qquad \textbf{(28)}$$

Where:

$\dot{Q}_i$ = The release rate of radionuclide i in units of μCi/sec.

All other terms are as previously defined.

b. Skin Dose Rate Methodology

The dose rate to the skin due to immersion in a cloud of noble gases is given by:

$$\left(\overline{\chi/Q}\right)_{Max} \sum_i \left(L_i + 1.1M_i\right)\dot{Q}_i \leq 3000 \text{ mrem / year} \qquad \textbf{(29)}$$

Where the terms are as previously defined.

c. Radioiodine, Tritium and Particulate Dose Rate Methodology

The dose rate to organ, o, due to radioiodines, tritium and particulates released in gaseous effluents is given by:

$$\left(\overline{\chi/Q}\right)_{Max} \sum_{i} P_{io} \dot{Q}_i \leq 1500 \text{ mrem / year} \qquad \textbf{(30)}$$

Where:

P_{io} = $K'(BR)\,DFA_{io}$

and

K' = 10^6 ρCi/μCi

BR = The breathing rate of the a child age group in m^3/yr. The default value of 3700 m^3/yr is taken from Table E-5 of Reg. Guide 1.109.

DFA_i = The inhalation dose factor for organ o, for the child age group for radionuclide, i, from Table E-9 of Reg. Guide 1.109 in mrem/ρCi, with the following exceptions: H-3, Sb-124 and Sb-125 inhalation dose conversion factors taken from NUREG/CR4013.

All other terms are as previously defined.

Values for P_{io} are listed in Table 10.6.

6.2.4 Noble Gas Air Dose Calculation Methodology

a. Gamma Air Dose

The gamma air dose due to immersion in a cloud of noble gases is given by:

$$D_{a\gamma} = 3.17 \times 10^{-8} \left(\overline{\chi/Q}\right)_{Max} \sum_i M_i \tilde{Q}_i \qquad (31)$$

Where:

$D_{a\gamma}$ = Gamma air dose in mrad.

3.17×10^{-8} = Conversion constant yr/sec.

M_i = Gamma air dose factor for nuclide i, in mrad/yr per $\mu Ci/m^3$. Values are listed in Table 10.3.

$\tilde{Q}_i$ = Total release of noble gas radionuclide, i, in μCi.

All other terms are as previously defined.

b. Beta Air Dose

The beta air dose due to immersion in a cloud of noble gases is given by:

$$D_{a\beta} = 3.17 \times 10^{-8} \left(\overline{\chi/Q}\right)_{Max} \sum_i N_i \tilde{Q}_i \qquad (32)$$

Where:

$D_{a\beta}$ = Beta air dose in mrad.

N_i = Beta air dose factor for nuclide i, in mrad/yr per $\mu Ci/m^3$. Values are listed in Table 10.3.

All other terms are as previously defined.

6.2.5 Dose To Critical Receptor Due To Radioiodines, Tritium and Particulates Released in Gaseous Effluents

a. Calculation Methodology

The dose to an individual (critical receptor) due to radioiodines, tritium and particulates released in gaseous effluents with half-lives greater than 8 days is determined based upon the methodology described in NUREG 0133. This methodology makes use of the maximum individual concept described in Regulatory Guide 1.109. The maximum individual is characterized as maximum with regard to food consumption, occupancy, and other usage parameters. This concept therefore models those individuals within the local population with habits representing reasonable deviations from the average. In all physiological and metabolic respects, the maximum individual is assumed to have those characteristics that represent the average for the age group of interest.

The concept of critical receptor is introduced as a further refinement of the maximum individual. The critical receptor is defined as that individual that receives the largest dose based upon the combination of dose pathways that have been shown to actually exist. The critical receptor concept is applied at that location where the combination of dispersion (χ/Q), deposition (D/Q), existing pathways, occupancy time, receptor age group, and effluent source term indicates the maximum potential exposure. The inhalation and ground plane exposure pathways are considered to exist at all locations. The grass-cow-milk, grass-cow-meat, and vegetation pathways are considered based on their actual existence in the vicinity of the plant.

The dose pathways that have been shown to actually exist at DCPP are the ground plane, inhalation and the vegetation pathways. These dose pathways are reviewed yearly and updated based upon the annual land use census survey in order to insure that actual exposure to an individual will not be substantially underestimated.

The locations of the pathways and descriptions are listed in Table 10.2.

b. Dose Calculation

The dose contributions to the total body and each individual organ (bone, liver, thyroid, kidney, lung and GI-LLI) of the maximum exposed individual (Critical Receptor) due to radioactive gaseous effluent releases is calculated for all radionuclides identified in gaseous effluents released to unrestricted areas using the following expression:

$$D_{apo} = 3.17 \times 10^{-8}\ \overline{W}_{CR} \sum_i R_{aipo} \tilde{Q}_i \qquad (33)$$

Where:

D_{apo} = Dose to the critical receptor for age group a, pathway p, and organ o, in mrem.

$\overline{W}_{CR}$ = Critical receptor $\overline{\chi/Q}$ for immersion, inhalation and all tritium pathways (seconds/m^3) from Table 10.2.

= Critical receptor $\overline{D/Q}$ for ground plane and all ingestion pathways (1/m^2) from Table 10.2.

R_{aipo} = Site specific dose factor for age group a, radionuclide i, pathway p, and organ j (mrem/yr per μCi/m^3 for inhalation and tritium pathways - mrem/yr per μCi/(sec m^2) for ground plane and ingestion pathways). These dose factors are listed in Table 10.6.

The site specific dose factors are calculated based upon NUREG 0133 methodology. All dose conversion factors are taken from Reg. Guide 1.109, Rev 1, Tables E6-E14, with the following exceptions: H-3, Sb-124 and Sb-125 dose conversion factors taken from NUREG/CR-4013.

$\tilde{Q}_i$ = The total release of radionuclide i, in units of μCi.

6.2.6 Noble Gas Gaseous Radioactive Waste (GRW) Batch Release Percent Release Rate Limits (PRRLs) and Expected Reading (ER)

The Percent Release Rate Limit (PRRL) for noble gas releases for each unit is calculated based upon the 500 mrem/yr whole body dose rate limit, and is given by Equation 34.

$$PRRL = \frac{\left(\overline{\chi/Q}\right)_{Max} \sum_i K_i \dot{Q}_i}{(0.48)\left(500\, mrem/yr\right)} \times 100\% \qquad \textbf{(34)}$$

Where:

$\left(\overline{\chi/Q}\right)_{Max}$ = The maximum site boundary dispersion factor based on 5 year averages from Table 10.2.

K_i = Whole body dose factor (mrem/yr per $\mu Ci/m^3$) for isotope "i." Dose factors are presented in Table 10.3.

$\dot{Q}_i$ = Total release rate of isotope "i" from all sources discharged through this release point in μCi/sec.

0.48 = Plant vent allocation factor for one unit from Table 6. 2.

500 mrem/yr = Site noble gas dose rate limit.

The Expected Reading (ER) is the anticipated monitor response based upon the known plant vent concentration and the monitor response factors. The Expected Readings for RE-22, RE-44, RE-14 are given by Equations 35, 36, and 37.

$$ER_{(RE-22)} = BKG_{(RE-22)} + \sum_i k_{(RE-22)i}\, C_{(RE-22)i} \qquad (35)$$

Where:

$ER_{(RE-22)}$ = Expected reading on monitor RE-22 in µCi/cc.

$BKG_{(RE-22)}$ = Monitor background.

$k_{(RE-22)i}$ = Noble gas monitor response factor for nuclide "i" for monitor RE-22.

$C_{(RE-22)i}$ = Concentration of nuclide "i" seen by RE-22.

$$ER_{(RE-44)} = BKG_{(RE-44)} + CCSP_{(RE-44)} \sum_i k_{(RE-44)i}\, C_{(RE-44)i} \qquad (36)$$

Where:

$ER_{(RE-44)}$ = Expected reading on monitor RE-44 in µCi/cc.

$BKG_{(RE-44)}$ = Monitor background.

$CCSP_{(RE-44)}$ = Conversion constant setpoint for monitor RE-44.

$k_{(RE-44)i}$ = Noble gas monitor response factor for nuclide "i" for monitor RE-44.

$C_{(RE-44)i}$ = Concentration of nuclide "i" seen by monitor RE-44.

$$ER_{(RE-14)} = BKG_{|RE-14|} + CCSP_{(RE-14)} \sum_i k_{(RE-14)i}\, C_{(RE-14)i} \qquad (37)$$

Where:

$ER_{(RE-14)}$ = Expected reading on monitor RE-14 in µCi/cc.

$BKG_{(RE-14)}$ = Monitor background.

$CCSP_{(RE-14)}$ = Conversion constant setpoint for monitor RE-14.

$k_{(RE-14)i}$ = Noble gas monitor response factor for nuclide "i" for monitor RE-14.

$C_{(RE-14)i}$ = Concentration of nuclide "i" seen by monitor RE-14.

Generally if the Expected Reading (ER) is greater than the existing HASP setting (an "administrative limit" as set by CY2.DC1) then no release should be made until a calculation shows that the HASP (Admin Limit) can be raised so the release can be legally discharged. On the other hand should the ER be less than the existing HASP (Admin Limit), then the release can be discharged.

6.2.7 IPT - PRRL

The Percent Release Rate Limit (PRRL) for radioiodines, tritium and particulates for each unit is calculated based upon the 1500 mrem/yr organ dose rate limit. The dose rate is calculated for the inhalation pathway to the child age group using the highest (worst case) organ dose factor for nuclide. The Percent Release Rate Limit based on the worst case organ is given by Equation 38.

$$PRRL_o = \frac{\left(\overline{\chi/Q}\right)_{Max} \sum_i P_i^w \dot{Q}_i}{(0.48)\left(1500\, mrem/yr\right)} \times 100\% \qquad \textbf{(38)}$$

Where:

$\left(\overline{\chi/Q}\right)_{Max}$ = The maximum site boundary dispersion factor based on 5 year averages from Table 10.2.

P_i^w = Inhalation dose factor for nuclide "i" (mrem/yr/µCi/m3) for child age group for worst case organ, from Table 10.4. Dose factors are based upon NUREG 0133 methodology. Inhalation dose conversion factors are taken from Reg. Guide 1.109, Rev 1, Table E-9, with the following exceptions: H-3, Sb-124 and Sb-125 inhalation dose conversion factors taken from NUREG/CR-4013.

$\dot{Q}_i$ = Release rate of isotope "i" in µCi/sec.

0.48 = Plant vent location factor for one unit from Table 6. 2.

1500 mrem/yr = Site radioiodine, tritium and particulate dose rate limit.

6.2.8 Alternate Dose Methodologies

For purposes of routine gaseous effluent dose assessment, the methodology of NUREG 0133 (described in Section 6.2.5) will be used. However, DCPP may elect to utilize the dose methodologies of Regulatory Guide 1.109 or the GASPAR computer code for special purposes such as evaluation of potential new gaseous effluent dose pathways or critical receptors.

6.2.9 Gas Effluent Dose Projection

The projected dose contributions from each reactor unit due to gaseous effluents for the current calendar month, quarter and current calendar year must be determined in accordance with the methodology and parameters in the ODCP at least every 31 days.

The purpose of this is to determine if appropriate treatment of gaseous radioactive materials in relation to maintaining releases "as low as reasonably achievable," is necessary.

Projections will be made, at least by the end of each month with attention to the frequency requirement contained in radiological effluent controls program.

The projected dose from each reactor unit is given by:

$$D_P = D_{P,U} + \tfrac{1}{2} D_{P,Com} \qquad (39)$$

Where:

D_P = Projected Dose.

$D_{P,U}$ = Projected dose attributed to reactor unit, U.

$D_{P,Com}$ = Projected dose common to both reactor units.

The 31 day projected dose is calculated by Equation 40.

$$D_P^M = 31 \times \frac{D_A^{PM} + d_A^{CM} + d_P^{CB}}{(T+t)} \quad \textbf{(40)}$$

Where:

D_P^M = Projected Dose for the next 31 day period.

D_A^{PM} = Previous Month's Actual Dose

d_A^{CM} = Current Month Actual Dose to date

d_P^{CB} = Projected Dose from Current Batch Release

T = Number of days in the previous month

t = Number of days into the present month

Projected quarterly doses are determined by Equation 41.

$$D_P^{CQ} = d_A^{CQ} + (92-t)\frac{D_A^{PQ} + d_A^{CQ} + d_P^{CB}}{(T+t)} \quad \textbf{(41)}$$

Where:

D_P^{CQ} = Projected dose for the current calendar quarter.

d_A^{CQ} = Current quarter to date actual dose.

D_A^{PQ} = Previous quarter's actual dose.

d_P^{CB} = Projected dose as a result of the current batch release.

T = Number of days in the previous quarter.

t = Number of days into the present quarter.

Projected yearly doses are determined by Equation 42.

$$D_P^{CY} = d_A^{CY} + (366 - t)\frac{D_A^{PY} + d_A^{CY} + d_P^{CB}}{(T + t)} \qquad (42)$$

Where:

D_P^{CY} = Projected dose for the current calendar year.

d_A^{CY} = Current year to date actual dose.

D_A^{PY} = Previous year's actual dose.

d_P^{CB} = Projected dose as a result of the current batch release.

T = Number of days in the previous year.

t = Number of days into the present year.

6.2.10 Unplanned Gaseous Releases

a. An unplanned release is an unexpected and potentially unmonitored release to the environment due to operational error or equipment malfunctions.

1. Unmonitored unplanned releases shall have a report written by the Radiochemistry Effluents Engineer describing the event with a calculation, if possible, of the percent of RECP release rate limit. This will then be forwarded to PSRC for review and then forwarded to NSOC for review.

2. Monitored unplanned releases which exceed 1% of the RECP release rate limit will also have a report written describing the event and must be forwarded to the PSRC for review, and then forwarded to NSOC for review. For purposes of classification only, unplanned release puffs through the plant vent may use one hour integrated resolution times.

3. Describe these unplanned releases in the Annual radioactive effluent release report. This report will also be forwarded to PSRC and NSOC for review.

6.3 40 CFR 190 Dose Calculations

6.3.1 Pathways

Calculation of total uranium fuel cycle dose for purposes of demonstrating compliance with 40 CFR 190 requires the contributions from liquid and gaseous effluent as well as direct radiation from the units and outside storage tanks to be considered. The total uranium fuel cycle dose to any member of the public will be calculated by summing the following doses:

- Direct Radiation Dose
- Liquid Effluent Dose
- Noble Gas Dose
- Radioiodine, Tritium and Particulate Gaseous Effluent Dose

6.3.2 Methodology

a. Direct Radiation Dose

Determination of direct radiation dose from the reactor units and from outside storage tanks may be made by direct survey measurements, derived from environmental TLD data, or calculated by shielding code.

The direct radiation dose will also take into account residence times near the site based upon land use census information.

The direct radiation determination using environmental TLD is given by equation 43.

$$D'_{s.b.} = \left[\frac{r_{adj}}{800}\right]^2 D'_{r_o} \times (9.57) \times e^{-(6.38)} \qquad (43)$$

where:

$D'_{s.b.}$ = the dose rate at the site boundary

D'_{ro} = the dose rate from the dosimetry reading

r_{adj} = the distance from the point source to the dosimetry

b. Noble Gas Dose

The noble gas skin dose and total body dose contributions to the total uranium fuel cycle dose to a member of the public will be determined as shown in Equations 44 and 45.

$$\text{Noble Gas Total Body Dose} = 3.17 \times 10^{-8} \left(\overline{\chi/Q}\right)_R \sum_i K_i \tilde{Q}_i \quad \textbf{(44)}$$

$$\text{Noble Gas Skin Dose} = 3.17 \times 10^{-8} \left(\overline{\chi/Q}\right)_R \sum_i \left(L_i + 1.1 M_i\right) \tilde{Q}_i \quad \textbf{(45)}$$

Where:

3.17×10^{-8} = Conversion constant yr/sec.

$\left(\overline{\chi/Q}\right)_R$ = Maximum historical dispersion factor for receptor of interest, based on 5 year averages from Table 10.2.

K_i = Gamma air dose factor for nuclide i, in mrem/yr per $\mu Ci/m^3$. Values are listed in Table 6.3.

L_i = Gamma air dose factor for nuclide i, in mrem/yr per $\mu Ci/m^3$. Values are listed in Table 6.3.

1.1 = Conversion factor mrem/mrad. Converts air dose to skin dose.

M_i = Gamma air dose factor for nuclide i, in mrad/yr per $\mu Ci/m^3$. Values are listed in Table 10.3.

$\tilde{Q}_i$ = Total release of noble gas radionuclide, i, in μCi/sec.

c. Liquid and Gaseous Effluent Dose

The doses from liquid effluents and radioiodines, tritium and particulates in gaseous effluents will be determined by Equations 1 and 33, respectively.

For purposes of calculating the dose required by the radiological effluent controls, more realistic assumptions concerning the liquid and gaseous effluent dose pathways will be used, based upon the most recent land use census data as well as the latest environmental monitoring information.

These assumptions may include, but not be limited to: more realistic liquid dilution factors, location and age of actual individuals, site specific food pathway parameters, and documentation of true food consumption. Other assumptions may be used provided they can be substantiated by census or direct measurement.

6.4 On-Site Dose to Members of the Public

Members of the public are occasionally granted access within the site boundary, but only in the owner controlled area up to the protected area boundary. The most common public access activities are: tours to the simulator (training building) or Bio Lab, policemen using the shooting range (most frequent activity), cattle drives through to adjacent properties, and visits of American Indians to on-site burial grounds (closest to the plant).

Exposure to members of the public due to liquid releases while on-site is highly unlikely and therefore not addressed. Exposure due to gaseous releases and direct radiation are credible and therefore are considered.

The dose to members of the public during on-site activities will be primarily determined by the duration of the on-site visitation time and by the closest proximity to the plant.

For gaseous releases the doses are calculated using Equations 44, 45 and 33. The R_i's in Equation 33 consider only the inhalation and ground plane pathway and exclude the infant age group.

The X/Q and D/Q values are modified using logarithmic extrapolation from the site boundary to the on-site location of interest as shown in Equations 46 and 47.

$$\log\left[X/Q\right]_{on\text{-}site} \approx \frac{\log\left[X/Q\right]_{S.B.} - \log\left[X/Q\right]_{loc.}}{\log\left(dist.S.B.\right) - \log\left(dist.loc.\right)}\left[\log\left(dist.on\text{-}site\right) - \log\left(dist.S.B.\right)\right] + \log\left[X/Q\right]_{S.B.} \quad \textbf{(46)}$$

$$\log\left[D/Q\right]_{on\text{-}site} \approx \frac{\log\left[D/Q\right]_{S.B.} - \log\left[D/Q\right]_{loc.}}{\log\left(dist.S.B.\right) - \log\left(dist.loc.\right)}\left[\log\left(dist.on\text{-}site\right) - \log\left(dist.S.B.\right)\right] + \log\left[D/Q\right]_{S.B.} \quad \textbf{(47)}$$

Based upon Regulatory Guide 1.111, these equations can be expected to provide reasonable dispersion and deposition estimates for distances as close as 200 meters.

Determination of direct radiation dose from the reactor units and from outside storage tanks may be made by direct survey measurements, derived from environmental TLD data, or calculated by shielding code.

A distance of 200 meters from the plant (both units) equidistant from the plant vent is arbitrarily selected as the closest perimeter for which on-site doses will be calculated.

The activities of the members-of-the-public while on-site (described above), are at or beyond 200 meters. Table 6. 3 details the types of on-site activities that members-of-the-public might be expected to participate in at DCPP. The sectors and closest distances in which they may visit as well as expected visitation duration are also shown (based on Security Section information).

Table 6. 3

Expected On-Site Distances and Visitation Times for Members of the Public

ONSITE MEMBER OF THE PUBLIC	SECTOR OF VISITATION	CLOSEST POINT OF APPROACH TO PLANT	AVERAGE EXPECTED VISITATION TIME PER YEAR
Police at shooting range	SE	700m	208 hours
Tour Participants			
Simulator Bldg	S (SE)	310m	4 hours
Bio Lab	SSE (SE)	460m	6 hours
Overlook	E	210m	1 hours
American Indians at burial grounds	NW NNW	200m 200m	96 hours 96 hours
Ranch hands driving cattle around site	NW NNW N NNE NE	250m 350m 320m 450m 630m	1 hour 1 hour 1 hour 1 hour 1 hour

7. ACCEPTANCE CRITERIA

7.1 There is no quantitative acceptance for this procedure. If the task or analysis has been accomplished within the bounds of this procedure, it is considered acceptable.

8. REFERENCES

8.1 Draft Radiological Tech Specs for PWRs, NUREG No. 0472, May 1978.

8.2 Calculation of Annual Doses to Man From Routine Releases of Reactor Effluents for the Purpose of Evaluating Compliance with 10 CFR 50, Appendix I, Regulatory Guide 1.109, Rev. 0, March 1976.

8.3 Calculation of Annual Doses to Man From Routine Releases of Reactor Effluents for the Purpose of Evaluating Compliance with 10 CFR 50, Appendix I, Regulatory Guide 1.109, Rev. 1, October 1977.

8.4 Preparation of Radiological Effluent Tech Specs for Nuclear Power Plants, NUREG No. 0133, October 1978.

8.5 LADTAP II - Technical Reference and User Guide, NUREG/CR-4013.

8.6 Methods for Demonstrating LWR Compliance with the EPA Uranium Fuel Cycle Standard 40 CFR 190, NUREG No. 0543, January 1980.

8.7 Methods for Estimating Atmospheric Transport and Dispersion of Gaseous Effluents in Routine Releases from Light-Water-Cooled Reactors, Regulatory Guide, 1.111, Rev. 1, July, 1977.

8.8 Radioactive Decay Data Tables, David C. Kocher. DOE/TIC-11026, 1981.

8.9 CAP A-6, "Gaseous Radwaste Discharge Management."

8.10 CAP A-5, "Liquid Radwaste Discharge Management."

8.11 CAP D-15, "Steam Generator Leak Rate Determination."

8.12 CAP D-19, "Correlation of Rad Monitors to Radioactivity."

8.13 CY2.DC1, "Radiation Monitoring System High Alarm Setpoint Control Procedure."

8.14 CY2.ID1, "Radiological Effluent and Controls Program" (RECP)

8.15 "Setpoint Calculation for Containment Ventilation Exhaust Monitor," Calc # NSP-1&2-39-44, 10/92 and 11/92 and AR A0430610.

9. RECORDS

9.1 Data Sheets and records will be maintained in the Records Management System (RMS) in accordance with CY1.DC1, "Analytical Data Processing Responsibilities."

10. APPENDICES

10.1 Tables

11. ATTACHMENTS

None

12. SPONSOR

Jeff Gardner

FIGURE 6.1
LIQUID DISCHARGES (LRW) MONITORED FOR RADIOACTIVITY

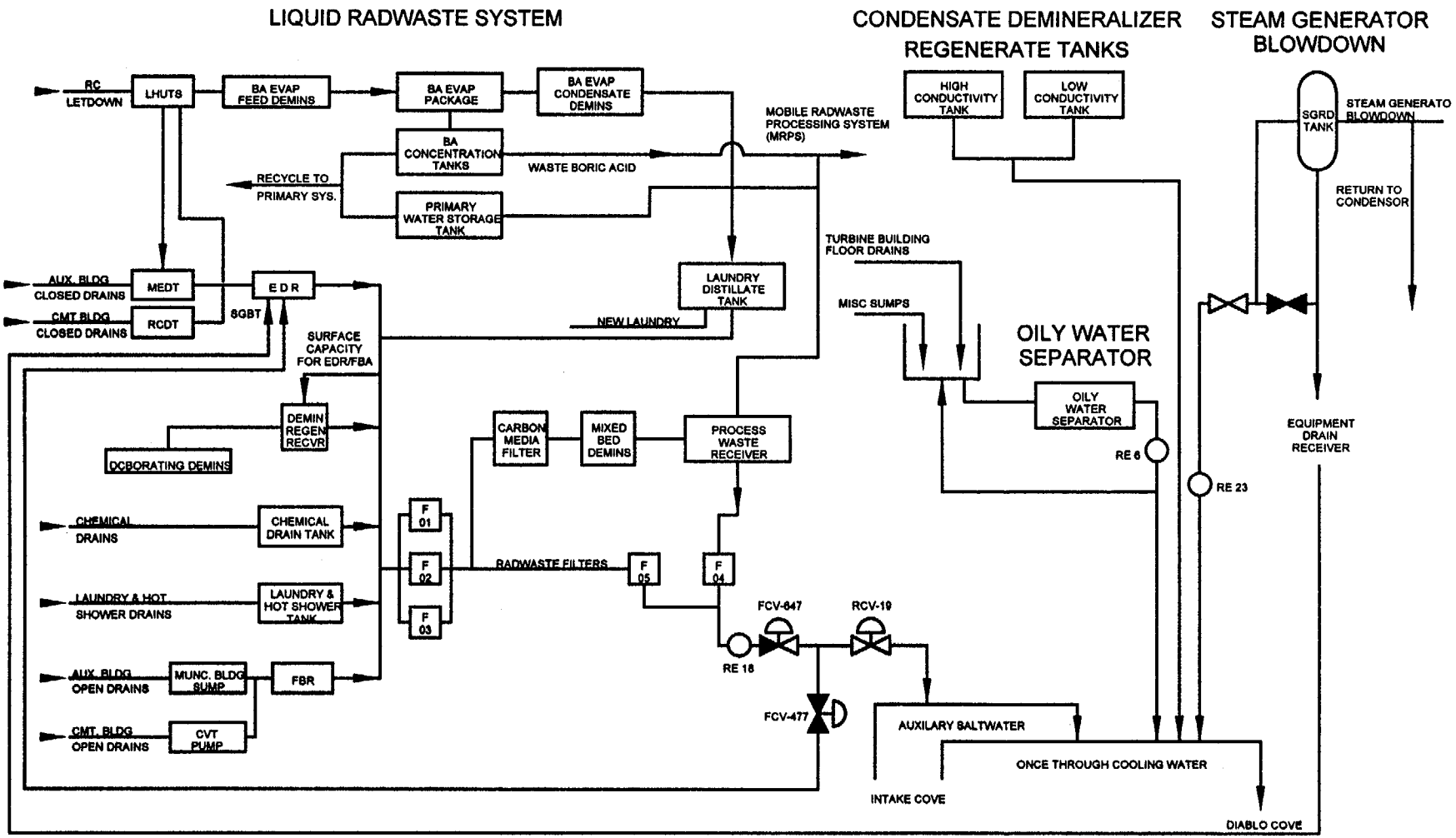

00692302

FIGURE 6.2
GASEOUS RELEASES (GRW) MONITORED FOR RADIOACTIVITY

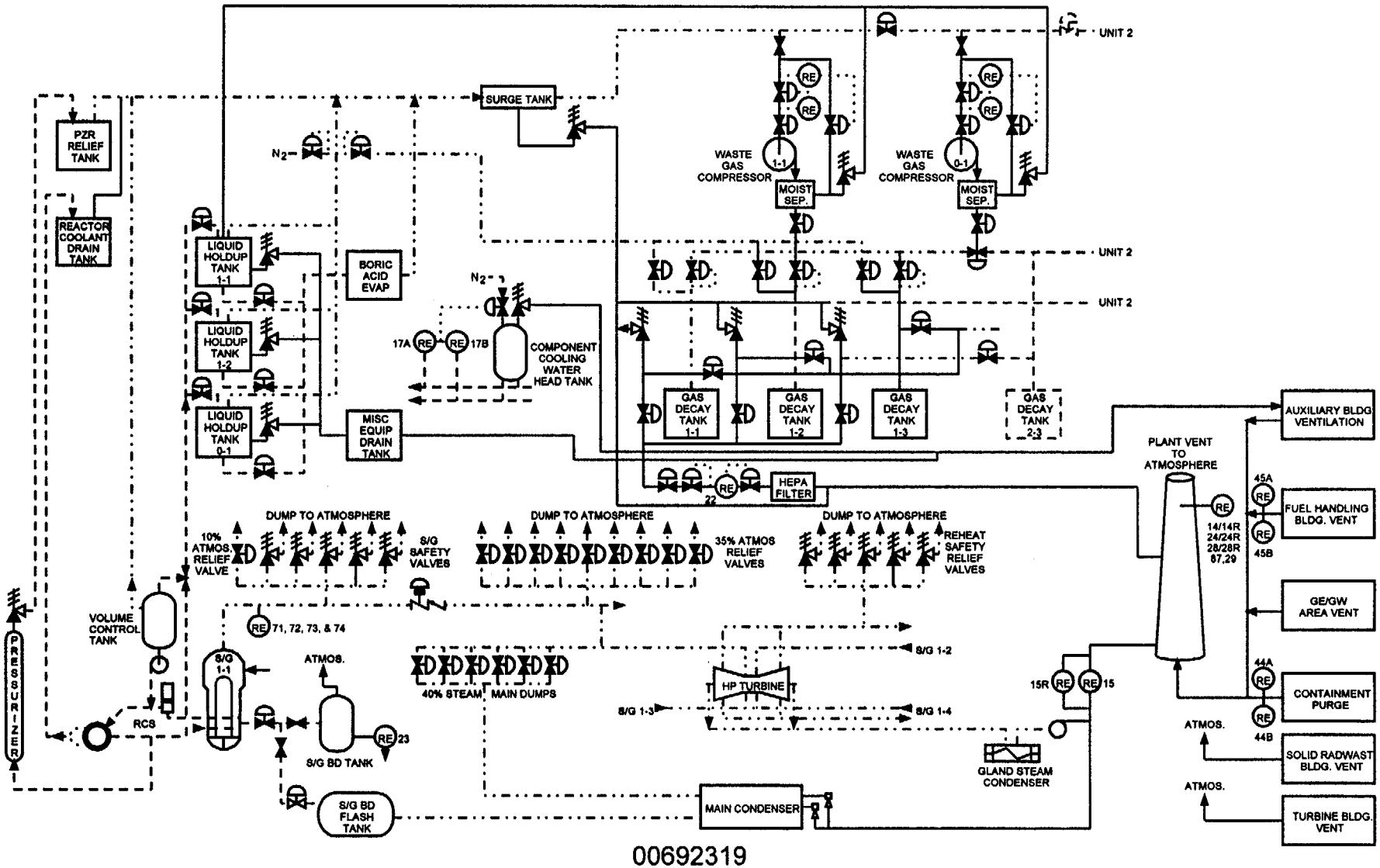

00692319

TABLE 10.1

LRW COMPOSITE DOSE FACTORS[1], A_{io},
FOR ADULTS AT A SALTWATER SITE
(mrem/hour per µCi/ml)
organ "o"

Nuclide	Tot Body	Thyroid	Kidney	Lung	GI-LLI	Bone	Liver
H-3	1.61E-01	1.61E-01	1.61E-01	1.61E-01	1.61E-01	0.00E+00	1.61E-01
Na-24	4.57E-01	4.57E-01	4.57E-01	4.57E-01	4.57E-01	4.57E-01	4.57E-01
Cr-51	5.58E+00	3.34E+00	1.23E+00	7.40E+00	1.40E+03	0.00E+00	0.00E+00
Mn-54	1.35E+03	0.00E+00	2.10E+03	0.00E+00	2.16E+04	0.00E+00	7.06E+03
Mn-56	3.15E+01	0.00E+00	2.26E+02	0.00E+00	5.67E+03	0.00E+00	1.78E+02
Fe-55	8.23E+03	0.00E+00	0.00E+00	1.97E+04	2.03E+04	5.11E+04	3.53E+04
Fe-59	7.27E+04	0.00E+00	0.00E+00	5.30E+04	6.32E+05	8.06E+04	1.90E+05
Co-57	2.36E+02	0.00E+00	0.00E+00	0.00E+00	3.59E+03	0.00E+00	1.42E+02
Co-58	1.35E+03	0.00E+00	0.00E+00	0.00E+00	1.22E+04	0.00E+00	6.03E+02
Co-60	3.82E+03	0.00E+00	0.00E+00	0.00E+00	3.25E+04	0.00E+00	1.73E+03
Ni-65	1.20E+01	0.00E+00	0.00E+00	0.00E+00	6.65E+02	2.02E+02	2.62E+01
Cu-64	1.01E+02	0.00E+00	5.40E+02	0.00E+00	1.83E+04	0.00E+00	2.14E+02
Zn-65	2.32E+05	0.00E+00	3.43E+05	0.00E+00	3.23E+05	1.61E+05	5.13E+05
Zn-69	4.56E+01	0.00E+00	4.26E+02	0.00E+00	9.85E+01	3.43E+02	6.56E+02
As-76	4.42E+01	0.00E+00	8.72E+01	0.00E+00	0.00E+00	0.00E+00	4.62E+01
Br-82	4.07E+00	0.00E+00	0.00E+00	0.00E+00	4.67E+00	0.00E+00	0.00E+00
Br-84	9.39E-02	0.00E+00	0.00E+00	0.00E+00	7.37E-07	0.00E+00	0.00E+00
Rb-86	2.91E+02	0.00E+00	0.00E+00	0.00E+00	1.23E+02	0.00E+00	6.24E+02
Rb-88	9.49E-01	0.00E+00	0.00E+00	0.00E+00	2.47E-11	0.00E+00	1.79E+00
Rb-89	8.34E-01	0.00E+00	0.00E+00	0.00E+00	6.89E-14	0.00E+00	1.19E+00
Sr-89	1.43E+02	0.00E+00	0.00E+00	0.00E+00	8.00E+02	4.99E+03	0.00E+00
Sr-90	2.83E+03	0.00E+00	0.00E+00	0.00E+00	3.55E+03	1.41E+05	0.00E+00
Sr-91	3.71E+00	0.00E+00	0.00E+00	0.00E+00	4.37E+02	9.18E+01	0.00E+00
Sr-92	1.51E+00	0.00E+00	0.00E+00	0.00E+00	6.90E+02	3.48E+01	0.00E+00
Y-90	1.63E-01	0.00E+00	0.00E+00	0.00E+00	6.42E+04	6.06E+00	0.00E+00
Y-91m	2.22E-03	0.00E+00	0.00E+00	0.00E+00	1.68E-01	5.73E-02	0.00E+00
Y-92	1.56E-02	0.00E+00	0.00E+00	0.00E+00	9.32E+03	5.32E-01	0.00E+00
Zr-95	3.46E+00	0.00E+00	8.02E+00	0.00E+00	1.62E+04	1.59E+01	5.11E+00
Zr-97	8.13E-02	0.00E+00	2.68E-01	0.00E+00	5.51E+04	8.81E-01	1.78E-01
Nb-95	1.34E+02	0.00E+00	2.46E+02	0.00E+00	1.51E+06	4.47E+02	2.49E+02
Mo-99	2.43E+01	0.00E+00	2.89E+02	0.00E+00	2.96E+02	0.00E+00	1.28E+02
Tc-101	1.88E-01	0.00E+00	3.46E-01	9.81E-03	5.77E-14	1.33E-02	1.92E-02
Ru-103	4.60E+01	0.00E+00	4.07E+02	0.00E+00	1.25E+04	1.07E+02	0.00E+00
Ru-105	3.51E+00	0.00E+00	1.15E+02	0.00E+00	5.44E+03	8.89E+00	0.00E+00
Ru-106	2.01E+02	0.00E+00	3.06E+03	0.00E+00	1.03E+05	1.59E+03	0.00E+00
Ag-110m	8.60E+02	0.00E+00	2.85E+03	0.00E+00	5.91E+05	1.56E+03	1.45E+03
Sn-113	3.53E+03	9.85E+02	0.00E+00	0.00E+00	0.00E+00	6.06E+04	1.66E+03
Sn-117m	8.76E+02	2.52E+02	0.00E+00	0.00E+00	0.00E+00	3.02E+03	3.41E+02
Sb-122	6.65E+00	3.09E-01	0.00E+00	1.18E+01	0.00E+00	2.19E+01	4.47E-01
Sb-124	1.09E+02	6.70E-01	0.00E+00	2.15E+02	7.84E+03	2.76E+02	5.22E+00
Sb-125	4.20E+01	1.79E-01	0.00E+00	1.36E+02	1.94E+03	1.77E+02	1.97E+00

LRW COMPOSITE DOSE FACTORS[1], A_{io},
FOR ADULTS AT A SALTWATER SITE
(mrem/hour per μCi/ml)
organ "o"

Nuclide	Tot Body	Thyroid	Kidney	Lung	GI-LLI	Bone	Liver
Te-129m	1.47E+02	3.20E+02	3.89E+03	0.00E+00	4.69E+03	9.31E+02	3.47E+02
Te-129	6.19E-01	1.95E+00	1.07E+01	0.00E+00	1.92E+00	2.54E+00	9.55E-01
Te-131m	5.71E+01	1.08E+02	6.94E+02	0.00E+00	6.80E+03	1.40E+02	6.85E+01
Te-131	5.03E-01	1.31E+00	6.99E+00	0.00E+00	2.26E-01	1.59E+00	6.66E-01
Te-132	1.24E+02	1.46E+02	1.27E+03	0.00E+00	6.24E+03	2.04E+02	1.32E+02
I-131	1.79E+02	1.02E+05	5.35E+02	0.00E+00	8.23E+01	2.18E+02	3.12E+02
I-132	9.96E+00	9.96E+02	4.54E+01	0.00E+00	5.35E+00	1.06E+01	2.85E+01
I-133	3.95E+01	1.90E+04	2.26E+02	0.00E+00	1.16E+02	7.45E+01	1.30E+02
I-134	5.40E+00	2.62E+02	2.40E+01	0.00E+00	1.32E-02	5.56E+00	1.51E+01
I-135	2.24E+01	4.01E+03	9.75E+01	0.00E+00	6.87E+01	2.32E+01	6.08E+01
Cs-134	1.33E+04	0.00E+00	5.27E+03	1.75E+03	2.85E+02	6.84E+03	1.63E+04
Cs-136	2.04E+03	0.00E+00	1.57E+03	2.16E+02	3.21E+02	7.16E+02	2.83E+03
Cs-137	7.85E+03	0.00E+00	4.07E+03	1.35E+03	2.32E+02	8.77E+03	1.20E+04
Cs-138	5.94E+00	0.00E+00	8.81E+00	8.70E-01	5.12E-05	6.07E+00	1.20E+01
Ba-139	2.30E-01	0.00E+00	5.23E-03	3.17E-03	1.39E+01	7.85E+00	5.59E-03
Ba-140	1.08E+02	0.00E+00	7.02E-01	1.18E+00	3.38E+03	1.64E+03	2.06E+00
Ba-141	1.29E-01	0.00E+00	2.68E-03	1.63E-03	1.80E-09	3.81E+00	2.88E-03
La-140	2.10E-01	0.00E+00	0.00E+00	0.00E+00	5.83E+04	1.57E+00	7.94E-01
La-142	9.13E-03	0.00E+00	0.00E+00	0.00E+00	2.68E+02	8.06E-02	3.67E-02
Ce-141	2.63E-01	0.00E+00	1.08E+00	0.00E+00	8.86E+03	3.43E+00	2.32E+00
Ce-143	4.94E-02	0.00E+00	1.97E-01	0.00E+00	1.67E+04	6.04E-01	4.46E+02
Ce-144	9.59E+00	0.00E+00	4.43E+01	0.00E+00	6.04E+04	1.79E+02	7.47E+01
Pr-144	9.64E-04	0.00E+00	4.44E-03	0.00E+00	2.73E-09	1.90E-02	7.87E-03
Nd-147	2.74E-01	0.00E+00	2.68E+00	0.00E+00	2.20E+04	3.96E+00	4.58E+00
W-187	2.68E+00	0.00E+00	0.00E+00	0.00E+00	2.51E+03	9.16E+00	7.66E+00
Np-239	1.91E-03	0.00E+00	1.08E-02	0.00E+00	7.11E+02	3.53E-02	3.47E-03

[1] Dose factors are based upon NUREG 0133 methodology.

TABLE 10.2
SUMMARY OF LAND USE CENSUS EVALUATION

Sector	Receptor Description	Distance (miles)	X/Q	D/Q	Comments
N	none				no receptors within 5 miles
NNE	residence	4.4	5.39E-8	9.24E-11	unknown use
	residence	3.3	8.30E-8	1.54E-10	cabin - limited use
NE	residence	4.9	4.10E-8	6.51E-11	full time occupancy
ENE	residence	4.4	4.35E-8	8.41E-11	full time occupancy
	residence	5.0	3.15E-8	5.63E-11	full time occupancy
E	residence	4.0	4.73E-8	1.26E-10	cabin - unknown use
	residence	3.7	5.75E-8	1.60E-10	part time occupancy
	residence + garden	4.5	3.98E-8	1.02E-10	full time occupancy
ESE	oat hay and sugar peas	3.3	1.91E-7	1.26E-9	field workers present only during the day - **critical receptor ground plane, inhalation, and vegetation ingestion dose assessed at this location**
SE	none				no receptors within 5 miles
SSE	none				over water
S	none				over water
SSW	none				over water
SW	none				over water
WSW	none				over water
W	none				over water
WNW	none				over water
NW	highest site boundary dispersion value	0.5	4.97E-6	1.97E-8	**Gas effluent dose rates. PRRLs and HASPs evaluated at this location.**
	residence	1.2	1.49E-6	6.22E-9	cabin - very limited use
	residence	3.6	2.06E-7	7.00E-10	full time occupancy
NNW	residence	1.5	5.87E-7	1.89E-9	full time occupancy (trailer) - **critical receptor ground plane and inhalation dose assessed at this location**

TABLE 10.3

GRW DOSE FACTORS FOR NOBLE GASES[1]

Radionuclide	Whole Body Dose Factor K_i (mrem/yr per $\mu Ci/m^3$)	Skin Dose Factor L_i (mrem/yr per $\mu Ci/m^3$)	Gamma Air Dose Factor M_i (mrad/yr per $\mu Ci/m^3$)	Beta Air Dose Factor N_i (mrad/yr per $\mu Ci/m^3$)
Kr-83m	7.56E-02	----	1.93E+01	2.88E+02
Kr-85m	1.17E+03	1.46E+03	1.23E+03	1.97E+03
Kr-85	1.61E+01	1.34E+03	1.72E+01	1.95E+03
Kr-87	5.92E+03	9.73E+03	6.17E+03	1.03E+04
Kr-88	1.47E+04	2.37E+03	1.52E+04	2.93E+03
Kr-89	1.66E+04	1.01E+04	1.73E+04	1.06E+04
Kr-90	1.56E+04	7.29E+03	1.63E+04	7.83E+03
Xe-131m	9.15E+01	4.76E+02	1.56E+02	1.11E+03
Xe-133m	2.51E+02	9.94E+02	3.27E+02	1.48E+03
Xe-133	2.94E+02	3.06E+02	3.53E+02	1.05E+03
Xe-135m	3.12E+03	7.11E+02	3.36E+03	7.39E+02
Xe-135	1.81E+03	1.86E+03	1.92E+03	2.46E+03
Xe-137	1.42E+03	1.22E+04	1.51E+03	1.27E+04
Xe-138	8.83E+03	4.13E+03	9.21E+03	4.75E+03
Ar-41	8.84E+03	2.69E+03	9.30E+03	3.28E+03

[1] From Table B-1 of Regulatory Guide 1.109 (Rev. 1, Oct. 1977)

TABLE 10.4

CHILD INHALATION PATHWAY DOSE FACTORS FOR WORST CASE ORGAN

Radionuclide	P_i^w
H-3	6.40E+02
CR-51	1.70E+04
MN-54	1.58E+06
FE-59	1.27E+06
CO-58	1.11E+06
CO-60	7.07E+06
ZN-65	9.95E+05
RB-86	1.98E+05
SR-89	2.16E+06
Y-90	2.68E+05
SR-90	3.85E+07
ZR-95	2.23E+06
NB-95	6.14E+05
RU-103	6.62E+05
RU-106	1.43E+07
AG-110M	5.48E+06
SB-124	3.24E+06
SB-125	2.32E+06
TE-129M	1.76E+06
I-131	1.62E+07
I-133	3.85E+06
CS-134	1.01E+06
CS-136	1.71E+05
CS-137	9.07E+05
BA-140	1.74E+06
CE-141	5.44E+05
CE-144	1.20E+07
ND-147	3.28E+05

TABLE 10.5

GROUND PLANE DOSE FACTORS

GRW DOSE PARAMETERS[1], $R_{i,GP}$ FOR RADIOIODINES, RADIOACTIVE PARTICULATES, AND ANY RADIONUCLIDE OTHER THAN NOBLE GAS (IPT), GASEOUS EFFLUENTS (GRW), ANY AGE GROUP, GROUND PLANE PATHWAY

(mrem/yr per μCi/(sec m²))

Nuclide	Bone	Liver	T Body	Thyroid	Kidney	Lung	GI-LLI
H-3	0.00E+00	0.00E+00	0.00E+00	0.00E+00	0.00E+00	0.00E+00	0.00E+00
CR-51	4.65E+06	4.65E+06	4.65E+06	4.65E+06	4.65E+06	4.65E+06	4.65E+06
MN-54	1.38E+09	1.38E+09	1.38E+09	1.38E+09	1.38E+09	1.38E+09	1.38E+09
FE-59	2.73E+08	2.73E+08	2.73E+08	2.73E+08	2.73E+08	2.73E+08	2.73E+08
CO-58	3.80E+08	3.80E+08	3.80E+08	3.80E+08	3.80E+08	3.80E+08	3.80E+08
CO-60	2.15E+10	2.15E+10	2.15E+10	2.15E+10	2.15E+10	2.15E+10	2.15E+10
ZN-65	7.46E+08	7.46E+08	7.46E+08	7.46E+08	7.46E+08	7.46E+08	7.46E+08
RB-86	8.98E+06	8.98E+06	8.98E+06	8.98E+06	8.98E+06	8.98E+06	8.98E+06
SR-89	2.16E+04	2.16E+04	2.16E+04	2.16E+04	2.16E+04	2.16E+04	2.16E+04
Y-90	4.50E+03	4.50E+03	4.50E+03	4.50E+03	4.50E+03	4.50E+03	4.50E+03
SR-90	0.00E+00	0.00E+00	0.00E+00	0.00E+00	0.00E+00	0.00E+00	0.00E+00
ZR-95	2.45E+08	2.45E+08	2.45E+08	2.45E+08	2.45E+08	2.45E+08	2.45E+08
NB-95	1.37E+08	1.37E+08	1.37E+08	1.37E+08	1.37E+08	1.37E+08	1.37E+08
RU-103	1.08E+08	1.08E+08	1.08E+08	1.08E+08	1.08E+08	1.08E+08	1.08E+08
RU-106	4.20E+08	4.20E+08	4.20E+08	4.20E+08	4.20E+08	4.20E+08	4.20E+08
AG-110M	3.45E+09	3.45E+09	3.45E+09	3.45E+09	3.45E+09	3.45E+09	3.45E+09
SB-124	5.99E+08	5.99E+08	5.99E+08	5.99E+08	5.99E+08	5.99E+08	5.99E+08
SB-125	2.34E+09	2.34E+09	2.34E+09	2.34E+09	2.34E+09	2.34E+09	2.34E+09
TE-129M	1.98E+07	1.98E+07	1.98E+07	1.98E+07	1.98E+07	1.98E+07	1.98E+07
I-131	1.72E+07	1.72E+07	1.72E+07	1.72E+07	1.72E+07	1.72E+07	1.72E+07
I-133	2.45E+06	2.45E+06	2.45E+06	2.45E+06	2.45E+06	2.45E+06	2.45E+06
CS-134	6.90E+09	6.90E+09	6.90E+09	6.90E+09	6.90E+09	6.90E+09	6.90E+09
CS-136	1.51E+08	1.51E+08	1.51E+08	1.51E+08	1.51E+08	1.51E+08	1.51E+08
CS-137	1.03E+10	1.03E+10	1.03E+10	1.03E+10	1.03E+10	1.03E+10	1.03E+10
BA-140	2.05E+07	2.05E+07	2.05E+07	2.05E+07	2.05E+07	2.05E+07	2.05E+07
CE-141	1.37E+07	1.37E+07	1.37E+07	1.37E+07	1.37E+07	1.37E+07	1.37E+07
CE-144	6.96E+07	6.96E+07	6.96E+07	6.96E+07	6.96E+07	6.96E+07	6.96E+07
ND-147	8.39E+06	8.39E+06	8.39E+06	8.39E+06	8.39E+06	8.39E+06	8.39E+06

[1] Dose factors are based upon NUREG 0133 methodology.

TABLE 10.6

GRW DOSE PARAMETERS FOR RADIOIODINES, RADIOACTIVE PARTICULATES, AND ANY RADIONUCLIDE OTHER THAN NOBLE GAS (IPT), GASEOUS EFFLUENTS (GRW)

TABLE 10.6.1

GRW DOSE PARAMETERS[1] FOR RADIOIODINES, RADIOACTIVE PARTICULATES, AND ANY RADIONUCLIDE OTHER THAN NOBLE GAS (IPT), GASEOUS EFFLUENTS (GRW), INFANT AGE GROUP, INHALATION PATHWAY ORGAN "O" (mrem/yr per μCi/m^3) $R_{i,Inhal}$

Nuclide	Bone	Liver	T Body	Thyroid	Kidney	Lung	GI-LLI
H-3	0.00E+00	3.68E+02	3.68E+02	3.68E+02	3.68E+02	3.68E+02	3.68E+02
CR-51	0.00E+00	0.00E+00	8.95E+01	5.75E+01	1.32E+01	1.28E+04	3.57E+02
MN-54	0.00E+00	2.53E+04	4.98E+03	0.00E+00	4.98E+03	1.00E+06	7.06E+03
FE-59	1.36E+04	2.35E+04	9.48E+03	0.00E+00	0.00E+00	1.02E+06	2.48E+04
CO-58	0.00E+00	1.22E+03	1.82E+03	0.00E+00	0.00E+00	7.77E+05	1.11E+04
CO-60	0.00E+00	8.02E+03	1.18E+04	0.00E+00	0.00E+00	4.51E+06	3.19E+04
ZN-65	1.93E+04	6.26E+04	3.11E+04	0.00E+00	3.25E+04	6.47E+05	5.14E+04
RB-86	0.00E+00	1.90E+05	8.82E+04	0.00E+00	0.00E+00	0.00E+00	3.04E+03
SR-89	3.98E+05	0.00E+00	1.14E+04	0.00E+00	0.00E+00	2.03E+06	6.40E+04
Y-90	3.29E+03	0.00E+00	8.82E+01	0.00E+00	0.00E+00	2.69E+05	1.04E+05
SR-90	1.55E+07	0.00E+00	3.12E+05	0.00E+00	0.00E+00	1.12E+07	1.31E+05
ZR-95	1.15E+05	2.79E+04	2.03E+04	0.00E+00	3.11E+04	1.75E+06	2.17E+04
NB-95	1.57E+04	6.43E+03	3.78E+03	0.00E+00	4.72E+03	4.79E+05	1.27E+04
RU-103	2.02E+03	0.00E+00	6.79E+02	0.00E+00	4.24E+03	5.52E+05	1.61E+04
RU-106	8.68E+04	0.00E+00	1.09E+04	0.00E+00	1.07E+05	1.16E+07	1.64E+05
AG-110M	9.98E+03	7.22E+03	5.00E+03	0.00E+00	1.09E+04	3.67E+06	3.30E+04
SB-124	3.79E+04	5.56E+02	1.20E+04	1.01E+02	0.00E+00	2.65E+06	5.91E+04
SB-125	5.17E+04	4.77E+02	1.09E+04	6.23E+01	0.00E+00	1.64E+06	1.47E+04
TE-129M	1.41E+04	6.09E+03	2.23E+03	5.47E+03	3.18E+04	1.68E+06	6.90E+04
I-131	3.79E+04	4.44E+04	1.96E+04	1.48E+07	5.18E+04	0.00E+00	1.06E+03
I-133	1.32E+04	1.92E+04	5.60E+03	3.56E+06	2.24E+04	0.00E+00	2.16E+03
CS-134	3.96E+05	7.03E+05	7.45E+04	0.00E+00	1.90E+05	7.97E+04	1.33E+03
CS-136	4.83E+04	1.35E+05	5.29E+04	0.00E+00	5.64E+04	1.18E+04	1.43E+03
CS-137	5.49E+05	6.12E+05	4.55E+04	0.00E+00	1.72E+05	7.13E+04	1.33E+03
BA-140	5.60E+04	5.60E+01	2.90E+03	0.00E+00	1.34E+01	1.60E+06	3.84E+04
CE-141	2.77E+04	1.67E+04	1.99E+03	0.00E+00	5.25E+03	5.17E+05	2.16E+04
CE-144	3.19E+06	1.21E+06	1.76E+05	0.00E+00	5.38E+05	9.84E+06	1.48E+05
ND-147	7.94E+03	8.13E+03	5.00E+02	0.00E+00	3.15E+03	3.22E+05	3.12E+04

[1] Dose factors are based upon NUREG 0133 methodology.

TABLE 10.6.2

GRW DOSE PARAMETERS[1] FOR RADIOIODINES, RADIOACTIVE PARTICULATES, AND ANY RADIONUCLIDE OTHER THAN NOBLE GAS (IPT), GASEOUS EFFLUENTS (GRW), CHILD AGE GROUP, INHALATION PATHWAY ORGAN "O" (mrem/yr per μCi/m^3) $R_{i,Inhal}$

Nuclide	Bone	Liver	T Body	Thyroid	Kidney	Lung	GI-LLI
H-3	0.00E+00	6.40E+02	6.40E+02	6.40E+02	6.40E+02	6.40E+02	6.40E+02
CR-51	0.00E+00	0.00E+00	1.54E+02	8.55E+01	2.43E+01	1.70E+04	1.08E+03
MN-54	0.00E+00	4.29E+04	9.51E+03	0.00E+00	1.00E+04	1.58E+06	2.29E+04
FE-59	2.07E+04	3.34E+04	1.67E+04	0.00E+00	0.00E+00	1.27E+06	7.07E+04
CO-58	0.00E+00	1.77E+03	3.16E+03	0.00E+00	0.00E+00	1.11E+06	3.44E+04
CO-60	0.00E+00	1.31E+04	2.26E+04	0.00E+00	0.00E+00	7.07E+06	9.62E+04
ZN-65	4.26E+04	1.13E+05	7.03E+04	0.00E+00	7.14E+04	9.95E+05	1.63E+04
RB-86	0.00E+00	1.98E+05	1.14E+05	0.00E+00	0.00E+00	0.00E+00	7.99E+03
SR-89	5.99E+05	0.00E+00	1.72E+04	0.00E+00	0.00E+00	2.16E+06	1.67E+05
Y-90	4.11E+03	0.00E+00	1.11E+02	0.00E+00	0.00E+00	2.62E+05	2.68E+05
SR-90	3.85E+07	0.00E+00	7.66E+05	0.00E+00	0.00E+00	1.48E+07	3.43E+05
ZR-95	1.90E+05	4.18E+04	3.70E+04	0.00E+00	5.96E+04	2.23E+06	6.11E+04
NB-95	2.35E+04	9.18E+03	6.55E+03	0.00E+00	8.62E+03	6.14E+05	3.70E+04
RU-103	2.79E+03	0.00E+00	1.07E+03	0.00E+00	7.03E+03	6.62E+05	4.48E+04
RU-106	1.36E+05	0.00E+00	1.69E+04	0.00E+00	1.84E+05	1.43E+07	4.29E+05
AG-110M	1.69E+04	1.14E+04	9.14E+03	0.00E+00	2.12E+04	5.48E+06	1.00E+05
SB-124	5.74E+04	7.40E+02	2.00E+04	1.26E+02	0.00E+00	3.24E+06	1.64E+05
SB-125	9.84E+04	7.59E+02	2.07E+04	9.10E+01	0.00E+00	2.32E+06	4.03E+04
TE-129M	1.92E+04	6.85E+03	3.04E+03	6.33E+03	5.03E+04	1.76E+06	1.82E+05
I-131	4.81E+04	4.81E+04	2.73E+04	1.62E+07	7.88E+04	0.00E+00	2.84E+03
I-133	1.66E+04	2.03E+04	7.70E+03	3.85E+06	3.38E+04	0.00E+00	5.48E+03
CS-134	6.51E+05	1.01E+06	2.25E+05	0.00E+00	3.30E+05	1.21E+05	3.85E+03
CS-136	6.51E+04	1.71E+05	1.16E+05	0.00E+00	9.55E+04	1.45E+04	4.18E+03
CS-137	9.07E+05	8.25E+05	1.28E+05	0.00E+00	2.82E+05	1.04E+05	3.62E+03
BA-140	7.40E+04	6.48E+01	4.33E+03	0.00E+00	2.11E+01	1.74E+06	1.02E+05
CE-141	3.92E+04	1.95E+04	2.90E+03	0.00E+00	8.55E+03	5.44E+05	5.66E+04
CE-144	6.77E+06	2.12E+06	3.61E+05	0.00E+00	1.17E+06	1.20E+07	3.89E+05
ND-147	1.08E+04	8.73E+03	6.81E+02	0.00E+00	4.81E+03	3.28E+05	8.21E+04

[1] Dose factors are based upon NUREG 0133 methodology.

TABLE 10.6.3

GRW DOSE PARAMETERS[1] FOR RADIOIODINES, RADIOACTIVE PARTICULATES, AND ANY RADIONUCLIDE OTHER THAN NOBLE GAS (IPT), GASEOUS EFFLUENTS (GRW), TEEN AGE GROUP, INHALATION PATHWAY ORGAN "O" (mrem/yr per μCi/m^3) $R_{i,Inhal}$

Nuclide	Bone	Liver	T Body	Thyroid	Kidney	Lung	GI-LLI
H-3	0.00E+00	7.25E+02	7.25E+02	7.25E+02	7.25E+02	7.25E+02	7.25E+02
CR-51	0.00E+00	0.00E+00	1.35E+02	7.50E+01	3.07E+01	2.10E+04	3.00E+03
MN-54	0.00E+00	5.11E+04	8.40E+03	0.00E+00	1.27E+04	1.98E+06	6.68E+04
FE-59	1.59E+04	3.70E+04	1.43E+04	0.00E+00	0.00E+00	1.53E+06	1.78E+05
CO-58	0.00E+00	2.07E+03	2.78E+03	0.00E+00	0.00E+00	1.34E+06	9.52E+04
CO-60	0.00E+00	1.51E+04	1.98E+04	0.00E+00	0.00E+00	8.72E+06	2.59E+05
ZN-65	3.86E+04	1.34E+05	6.24E+04	0.00E+00	8.64E+04	1.24E+06	4.66E+04
RB-86	0.00E+00	1.90E+05	8.40E+04	0.00E+00	0.00E+00	0.00E+00	1.77E+04
SR-89	4.34E+05	0.00E+00	1.25E+04	0.00E+00	0.00E+00	2.42E+06	3.71E+05
Y-90	2.98E+03	0.00E+00	8.00E+01	0.00E+00	0.00E+00	2.93E+05	5.59E+05
SR-90	3.31E+07	0.00E+00	6.66E+05	0.00E+00	0.00E+00	1.65E+07	7.65E+05
ZR-95	1.46E+05	4.58E+04	3.15E+04	0.00E+00	6.74E+04	2.69E+06	1.49E+05
NB-95	1.86E+04	1.03E+04	5.66E+03	0.00E+00	1.00E+04	7.51E+05	9.68E+04
RU-103	2.10E+03	0.00E+00	8.96E+02	0.00E+00	7.43E+03	7.83E+05	1.09E+05
RU-106	9.84E+04	0.00E+00	1.24E+04	0.00E+00	1.90E+05	1.61E+07	9.60E+05
AG-110M	1.38E+04	1.31E+04	7.99E+03	0.00E+00	2.50E+04	6.75E+06	2.73E+05
SB-124	4.30E+04	7.94E+02	1.68E+04	9.76E+01	0.00E+00	3.85E+06	3.98E+05
SB-125	7.38E+04	8.08E+02	1.72E+04	7.04E+01	0.00E+00	2.74E+06	9.92E+04
TE-129M	1.39E+04	6.58E+03	2.25E+03	4.58E+03	5.19E+04	1.98E+06	4.05E+05
I-131	3.54E+04	4.91E+04	2.64E+04	1.46E+07	8.40E+04	0.00E+00	6.49E+03
I-133	1.22E+04	2.05E+04	6.22E+03	2.92E+06	3.59E+04	0.00E+00	1.03E+04
CS-134	5.02E+05	1.13E+06	5.49E+05	0.00E+00	3.75E+05	1.46E+05	9.76E+03
CS-136	5.15E+04	1.94E+05	1.37E+05	0.00E+00	1.10E+05	1.78E+04	1.09E+04
CS-137	6.70E+05	8.48E+05	3.11E+05	0.00E+00	3.04E+05	1.21E+05	8.48E+03
BA-140	5.47E+04	6.70E+01	3.52E+03	0.00E+00	2.28E+01	2.03E+06	2.29E+05
CE-141	2.84E+04	1.90E+04	2.17E+03	0.00E+00	8.88E+03	6.14E+05	1.26E+05
CE-144	4.89E+06	2.02E+06	2.62E+05	0.00E+00	1.21E+06	1.34E+07	8.64E+05
ND-147	7.86E+03	8.56E+03	5.13E+02	0.00E+00	5.02E+03	3.72E+05	1.82E+05

[1] Dose factors are based upon NUREG 0133 methodology.

TABLE 10.6.4

GRW DOSE PARAMETERS[1] FOR RADIOIODINES, RADIOACTIVE PARTICULATES, AND ANY RADIONUCLIDE OTHER THAN NOBLE GAS (IPT), GASEOUS EFFLUENTS (GRW), ADULT AGE GROUP, INHALATION PATHWAY ORGAN "O" (mrem/yr per μCi/m^3) $R_{i,Inhal}$

Nuclide	Bone	Liver	T Body	Thyroid	Kidney	Lung	GI-LLI
H-3	0.00E+00	7.18E+02	7.18E+02	7.18E+02	7.18E+02	7.18E+02	7.18E+02
CR-51	0.00E+00	0.00E+00	1.00E+02	5.95E+01	2.28E+01	1.44E+04	3.32E+03
MN-54	0.00E+00	3.96E+04	6.30E+03	0.00E+00	9.84E+03	1.40E+06	7.74E+04
FE-59	1.18E+04	2.78E+04	1.06E+04	0.00E+00	0.00E+00	1.02E+06	1.88E+05
CO-58	0.00E+00	1.58E+03	2.07E+03	0.00E+00	0.00E+00	9.28E+05	1.06E+05
CO-60	0.00E+00	1.15E+04	1.48E+04	0.00E+00	0.00E+00	5.97E+06	2.85E+05
ZN-65	3.24E+04	1.03E+05	4.66E+04	0.00E+00	6.90E+04	8.64E+05	5.34E+04
RB-86	0.00E+00	1.35E+05	5.90E+04	0.00E+00	0.00E+00	0.00E+00	1.66E+04
SR-89	3.04E+05	0.00E+00	8.72E+03	0.00E+00	0.00E+00	1.40E+06	3.50E+05
Y-90	2.09E+03	0.00E+00	5.61E+01	0.00E+00	0.00E+00	1.70E+05	5.06E+05
SR-90	2.87E+07	0.00E+00	5.77E+05	0.00E+00	0.00E+00	9.60E+06	7.22E+05
ZR-95	1.07E+05	3.44E+04	2.33E+04	0.00E+00	5.42E+04	1.77E+06	1.50E+05
NB-95	1.41E+04	7.82E+03	4.21E+03	0.00E+00	7.74E+03	5.05E+05	1.04E+05
RU-103	1.53E+03	0.00E+00	6.58E+02	0.00E+00	5.83E+03	5.05E+05	1.10E+05
RU-106	6.91E+04	0.00E+00	8.72E+03	0.00E+00	1.34E+05	9.36E+06	9.12E+05
AG-110M	1.08E+04	1.00E+04	5.94E+03	0.00E+00	1.97E+04	4.63E+06	3.02E+05
SB-124	3.12E+04	5.89E+02	1.24E+04	7.55E+01	0.00E+00	2.48E+06	4.06E+05
SB-125	5.34E+04	5.95E+02	1.26E+04	5.40E+01	0.00E+00	1.74E+06	1.01E+05
TE-129M	9.76E+03	4.67E+03	1.58E+03	3.44E+03	3.66E+04	1.16E+06	3.83E+05
I-131	2.52E+04	3.58E+04	2.05E+04	1.19E+07	6.13E+04	0.00E+00	6.28E+03
I-133	8.64E+03	1.48E+04	4.52E+03	2.15E+06	2.58E+04	0.00E+00	8.88E+03
CS-134	3.73E+05	8.48E+05	7.28E+05	0.00E+00	2.87E+05	9.76E+04	1.04E+04
CS-136	3.90E+04	1.46E+05	1.10E+05	0.00E+00	8.56E+04	1.20E+04	1.17E+04
CS-137	4.78E+05	6.21E+05	4.28E+05	0.00E+00	2.22E+05	7.52E+04	8.40E+03
BA-140	3.90E+04	4.90E+01	2.57E+03	0.00E+00	1.67E+01	1.27E+06	2.18E+05
CE-141	1.99E+04	1.35E+04	1.53E+03	0.00E+00	6.26E+03	3.62E+05	1.20E+05
CE-144	3.43E+06	1.43E+06	1.84E+05	0.00E+00	8.48E+05	7.78E+06	8.16E+05
ND-147	5.27E+03	6.10E+03	3.65E+02	0.00E+00	3.56E+03	2.21E+05	1.73E+05

[1] Dose factors are based upon NUREG 0133 methodology.

TABLE 10.6.5

GRW DOSE PARAMETERS[1] FOR RADIOIODINES, RADIOACTIVE PARTICULATES, AND ANY RADIONUCLIDE OTHER THAN NOBLE GAS (IPT), GASEOUS EFFLUENTS (GRW), CHILD AGE GROUP, VEGETATION PATHWAY ORGAN "O" (mrem/yr per μCi/(sec m²)) $R_{i,y_{egi}}$

Nuclide	Bone	Liver	T Body	Thyroid	Kidney	Lung	GI-LLI
H-3[2]	0.00E+00	2.29E+03	2.29E+03	2.29E+03	2.29E+03	2.29E+03	2.29E+03
CR-51	0.00E+00	0.00E+00	1.17E+05	6.49E+04	1.77E+04	1.18E+05	6.20E+06
MN-54	0.00E+00	6.65E+08	1.77E+08	0.00E+00	1.86E+08	0.00E+00	5.58E+08
FE-59	3.97E+08	6.42E+08	3.20E+08	0.00E+00	0.00E+00	1.86E+08	6.69E+08
CO-58	0.00E+00	6.45E+07	1.97E+08	0.00E+00	0.00E+00	0.00E+00	3.76E+08
CO-60	0.00E+00	3.78E+08	1.12E+09	0.00E+00	0.00E+00	0.00E+00	2.10E+09
ZN-65	8.12E+08	2.16E+09	1.35E+09	0.00E+00	1.36E+09	0.00E+00	3.80E+08
RB-86	0.00E+00	4.54E+08	2.79E+08	0.00E+00	0.00E+00	0.00E+00	2.92E+07
SR-89	3.59E+10	0.00E+00	1.03E+09	0.00E+00	0.00E+00	0.00E+00	1.39E+09
Y-90	2.31E+04	0.00E+00	6.18E+02	0.00E+00	0.00E+00	0.00E+00	6.57E+07
SR-90	1.87E+12	0.00E+00	3.77E+10	0.00E+00	0.00E+00	0.00E+00	1.67E+10
ZR-95	3.86E+06	8.50E+05	7.56E+05	0.00E+00	1.22E+06	0.00E+00	8.86E+08
NB-95	4.12E+05	1.61E+05	1.15E+05	0.00E+00	1.51E+05	0.00E+00	2.97E+08
RU-103	1.53E+07	0.00E+00	5.89E+06	0.00E+00	3.86E+07	0.00E+00	3.96E+08
RU-106	7.45E+08	0.00E+00	9.30E+07	0.00E+00	1.01E+09	0.00E+00	1.16E+10
AG-110M	3.21E+07	2.17E+07	1.74E+07	0.00E+00	4.04E+07	0.00E+00	2.58E+09
SB-124	3.52E+08	4.57E+06	1.23E+08	7.78E+05	0.00E+00	1.96E+08	2.20E+09
SB-125	4.99E+08	3.85E+06	1.05E+08	4.62E+05	0.00E+00	2.78E+08	1.19E+09
TE-129M	8.40E+08	2.35E+08	1.30E+08	2.71E+08	2.47E+09	0.00E+00	1.02E+09
I-131	1.43E+08	1.44E+08	8.17E+07	4.75E+10	2.36E+08	0.00E+00	1.28E+07
I-133	3.52E+06	4.36E+06	1.65E+06	8.09E+08	7.26E+06	0.00E+00	1.76E+06
CS-134	1.60E+10	2.63E+10	5.55E+09	0.00E+00	8.16E+09	2.93E+09	1.42E+08
CS-136	8.18E+07	2.25E+08	1.46E+08	0.00E+00	1.20E+08	1.79E+07	7.90E+06
CS-137	2.39E+10	2.29E+10	3.38E+09	0.00E+00	7.46E+09	2.68E+09	1.43E+08
BA-140	2.77E+08	2.43E+05	1.62E+07	0.00E+00	7.90E+04	1.45E+05	1.40E+08
CE-141	6.55E+05	3.27E+05	4.85E+04	0.00E+00	1.43E+05	0.00E+00	4.08E+08
CE-144	1.27E+08	3.98E+07	6.78E+06	0.00E+00	2.21E+07	0.00E+00	1.04E+10
ND-147	7.27E+04	5.89E+04	4.56E+03	0.00E+00	3.23E+04	0.00E+00	9.33E+07

1 Dose factors are based upon NUREG 0133 methodology.

2 For Tritium the units of the dose parameters are mrem/yr per μCi/m^3 for all pathways, and they must be multiplied by X/Q.

TABLE 10.6.6

GRW DOSE PARAMETERS[1] FOR RADIOIODINES, RADIOACTIVE PARTICULATES, AND ANY RADIONUCLIDE OTHER THAN NOBLE GAS (IPT), GASEOUS EFFLUENTS (GRW), TEEN AGE GROUP, VEGETATION PATHWAY ORGAN "O" (mrem/yr per µCi/(sec m²)) $R_{i,Vegi}$

Nuclide	Bone	Liver	T Body	Thyroid	Kidney	Lung	GI-LLI
H-3[2]	0.00E+00	1.47E+03	1.47E+03	1.47E+03	1.47E+03	1.47E+03	1.47E+03
CR-51	0.00E+00	0.00E+00	6.16E+04	3.42E+04	1.35E+04	8.79E+04	1.03E+07
MN-54	0.00E+00	4.54E+08	9.01E+07	0.00E+00	1.36E+08	0.00E+00	9.32E+08
FE-59	1.79E+08	4.18E+08	1.61E+08	0.00E+00	0.00E+00	1.32E+08	9.89E+08
CO-58	0.00E+00	4.37E+07	1.01E+08	0.00E+00	0.00E+00	0.00E+00	6.02E+08
CO-60	0.00E+00	2.49E+08	5.60E+08	0.00E+00	0.00E+00	0.00E+00	3.24E+09
ZN-65	4.24E+08	1.47E+09	6.86E+08	0.00E+00	9.41E+08	0.00E+00	6.23E+08
RB-86	0.00E+00	2.75E+08	1.29E+08	0.00E+00	0.00E+00	0.00E+00	4.06E+07
SR-89	1.51E+10	0.00E+00	4.33E+08	0.00E+00	0.00E+00	0.00E+00	1.80E+09
Y-90	1.24E+04	0.00E+00	3.35E+02	0.00E+00	0.00E+00	0.00E+00	1.02E+08
SR-90	9.22E+11	0.00E+00	1.84E+10	0.00E+00	0.00E+00	0.00E+00	2.11E+10
ZR-95	1.72E+06	5.44E+05	3.74E+05	0.00E+00	7.99E+05	0.00E+00	1.26E+09
NB-95	1.93E+05	1.07E+05	5.90E+04	0.00E+00	1.04E+05	0.00E+00	4.58E+08
RU-103	6.82E+06	0.00E+00	2.91E+06	0.00E+00	2.40E+07	0.00E+00	5.69E+08
RU-106	3.09E+08	0.00E+00	3.90E+07	0.00E+00	5.97E+08	0.00E+00	1.48E+10
AG-110M	1.52E+07	1.44E+07	8.73E+06	0.00E+00	2.74E+07	0.00E+00	4.03E+09
SB-124	1.55E+08	2.85E+06	6.03E+07	3.51E+05	0.00E+00	1.35E+08	3.11E+09
SB-125	2.14E+08	2.34E+06	5.01E+07	2.05E+05	0.00E+00	1.88E+08	1.67E+09
TE-129M	3.61E+08	1.34E+08	5.72E+07	1.17E+08	1.51E+09	0.00E+00	1.36E+09
I-131	7.68E+07	1.08E+08	5.78E+07	3.14E+10	1.85E+08	0.00E+00	2.13E+07
I-133	1.93E+06	3.28E+06	1.00E+06	4.58E+08	5.75E+06	0.00E+00	2.48E+06
CS-134	7.10E+09	1.67E+10	7.75E+09	0.00E+00	5.31E+09	2.03E+09	2.08E+08
CS-136	4.35E+07	1.71E+08	1.15E+08	0.00E+00	9.31E+07	1.47E+07	1.38E+07
CS-137	1.01E+10	1.35E+10	4.69E+09	0.00E+00	4.59E+09	1.78E+09	1.92E+08
BA-140	1.38E+08	1.69E+05	8.90E+06	0.00E+00	5.74E+04	1.14E+05	2.13E+08
CE-141	2.83E+05	1.89E+05	2.17E+04	0.00E+00	8.89E+04	0.00E+00	5.40E+08
CE-144	5.27E+07	2.18E+07	2.83E+06	0.00E+00	1.30E+07	0.00E+00	1.33E+10
ND-147	3.67E+04	4.00E+04	2.39E+03	0.00E+00	2.35E+04	0.00E+00	1.44E+08

1 Dose factors are based upon NUREG 0133 methodology.

2 For Tritium the units of the dose parameters are mrem/yr per µCi/m^3 for all pathways, and they must be multiplied by X/Q.

TABLE 10.6.7

GRW DOSE PARAMETERS[1] FOR RADIOIODINES, RADIOACTIVE PARTICULATES, AND ANY RADIONUCLIDE OTHER THAN NOBLE GAS (IPT), GASEOUS EFFLUENTS (GRW), ADULT AGE GROUP, VEGETATION PATHWAY ORGAN "O"(mrem/yr per μCi/(sec m²)) $R_{i,Vegi}$

Nuclide	Bone	Liver	T Body	Thyroid	Kidney	Lung	GI-LLI
H-3[2]	0.00E+00	1.29E+03	1.29E+03	1.29E+03	1.29E+03	1.29E+03	1.29E+03
CR-51	0.00E+00	0.00E+00	4.64E+04	2.77E+04	1.02E+04	6.15E+04	1.17E+07
MN-54	0.00E+00	3.13E+08	5.97E+07	0.00E+00	9.31E+07	0.00E+00	9.58E+08
FE-59	1.26E+08	2.96E+08	1.13E+08	0.00E+00	0.00E+00	8.27E+07	9.87E+08
CO-58	0.00E+00	3.08E+07	6.90E+07	0.00E+00	0.00E+00	0.00E+00	6.24E+08
CO-60	0.00E+00	1.67E+08	3.69E+08	0.00E+00	0.00E+00	0.00E+00	3.14E+09
ZN-65	3.17E+08	1.01E+09	4.56E+08	0.00E+00	6.75E+08	0.00E+00	6.36E+08
RB-86	0.00E+00	2.20E+08	1.03E+08	0.00E+00	0.00E+00	0.00E+00	4.34E+07
SR-89	9.95E+09	0.00E+00	2.86E+08	0.00E+00	0.00E+00	0.00E+00	1.60E+09
Y-90	1.33E+04	0.00E+00	3.57E+02	0.00E+00	0.00E+00	0.00E+00	1.41E+08
SR-90	6.95E+11	0.00E+00	1.40E+10	0.00E+00	0.00E+00	0.00E+00	1.75E+10
ZR-95	1.18E+06	3.77E+05	2.55E+05	0.00E+00	5.92E+05	0.00E+00	1.20E+09
NB-95	1.43E+05	7.95E+04	4.27E+04	0.00E+00	7.86E+04	0.00E+00	4.83E+08
RU-103	4.77E+06	0.00E+00	2.05E+06	0.00E+00	1.82E+07	0.00E+00	5.57E+08
RU-106	1.93E+08	0.00E+00	2.44E+07	0.00E+00	3.72E+08	0.00E+00	1.25E+10
AG-110M	1.05E+07	9.75E+06	5.79E+06	0.00E+00	1.92E+07	0.00E+00	3.98E+09
SB-124	1.04E+08	1.96E+06	4.11E+07	2.52E+05	0.00E+00	8.08E+07	2.95E+09
SB-125	1.37E+08	1.53E+06	3.25E+07	1.39E+05	0.00E+00	1.05E+08	1.50E+09
TE-129M	2.51E+08	9.37E+07	3.97E+07	8.62E+07	1.05E+09	0.00E+00	1.26E+09
I-131	8.07E+07	1.15E+08	6.62E+07	3.78E+10	1.98E+08	0.00E+00	3.05E+07
I-133	2.08E+06	3.62E+06	1.10E+06	5.32E+08	6.31E+06	0.00E+00	3.25E+06
CS-134	4.67E+09	1.11E+10	9.08E+09	0.00E+00	3.59E+09	1.19E+09	1.94E+08
CS-136	4.25E+07	1.68E+08	1.21E+08	0.00E+00	9.33E+07	1.28E+07	1.90E+07
CS-137	6.36E+09	8.70E+09	5.70E+09	0.00E+00	2.95E+09	9.81E+08	1.68E+08
BA-140	1.29E+08	1.61E+05	8.42E+06	0.00E+00	5.49E+04	9.24E+04	2.65E+08
CE-141	1.97E+05	1.33E+05	1.51E+04	0.00E+00	6.19E+04	0.00E+00	5.09E+08
CE-144	3.29E+07	1.38E+07	1.77E+06	0.00E+00	8.16E+06	0.00E+00	1.11E+10
ND-147	3.37E+04	3.90E+04	2.33E+03	0.00E+00	2.28E+04	0.00E+00	1.87E+08

1 Dose factors are based upon NUREG 0133 methodology.

2 For Tritium the units of the dose parameters are mrem/yr per μCi/m^3 for all pathways, and they must be multiplied by X/Q.

Attachment 4

1999 Land Use Census

1999 Land Use Census

DCPP Radiation Protection personnel conducted a land use census in the vicinity of DCPP for 1999. The land use census is based on Nuclear Regulatory Commission (NRC), Regulatory Guide 4.8, "Environmental Technical Specifications for Nuclear Power Plants", and required by DCPP Program Directive CY2, "Radiological Monitoring and Controls Program." The census is conducted at least once per year during the growing season for the Diablo Canyon environs.

The land use census identifies the nearest milk animal and garden greater than 50 square meters (500 square feet), producing broadleaf vegetation, in each of the landward meteorological sectors within a distance of 8 kilometers (5 miles) of the plant. DCPP IDAP RP1.ID11 "Environmental Radiological Monitoring Program", requires that the nearest residence be identified in each of the landward sectors within a distance of 5 miles.

The land use census was performed by directly contacting individual landowners or tenants, or by aerial surveys. The landowners or tenants were contacted between August 6 and October 27, 1999. The aerial survey was done on August 6, 1999.

The census identified one household garden in the east sector at 4.5 miles, greater than 50 square meters (500 square feet) that produces broadleaf vegetation. No milk animals were identified within the first 5 miles in any sector. Much of the area surrounding the plant site is used for cattle grazing. Goats were used for weed abatement for approximately 6 months within the area surrounding the plant site. A farm is located on the coastal plateau in the east southeast (ESE) sector, along the site access road. The farm starts at approximately 3.3 miles and extends to 4.5 miles from the plant, but produces only legumes and cereal grass (grains).

A total of 13 residences were identified within the 5-mile radius of the plant that were confirmed to be, or appeared to be, occupied during 1999. The nearest residence is 1.2 miles north-west (NW) of the plant. Table 1 summarizes the results of the land use census and Figure 1 shows the locations of the farm and residences in the vicinity of DCPP.

Table 1

Land Use Census

Distance in Miles from the Unit 1 Center Line to the Nearest Milk Animal, Residence, Vegetable Garden

22½ Degree[a] Radial Sector	Nearest Milk Animal	Nearest Residence km (mi)	Residence Azimuth Degree	Nearest Vegetable Garden km (mi)
NW	None	1.93 (1.2)	319.5	None
NNW	None	2.41 (1.5)	331	None
N	None	None	—	None
NNE	None	5.3 (3.3)	018.5	None
NE	None	7.89 (4.9)	036	None
ENE	None	7.08 (4.4)	063.5	None
E	None	5.95 (3.7)	097.5	None
E	None	7.24 (4.5)	098	7.24 (4.5)
ESE	None	None	—	5.28 (3.3)[b]
SE	None	None	—	None

Table Notation:

[a] Sectors not shown contain no land beyond the site boundary, other than islets not used for the purposes indicated in this table.

[b] The vegetable garden indicated is the farm along the site access road; however, it does not grow broadleaf vegetation.

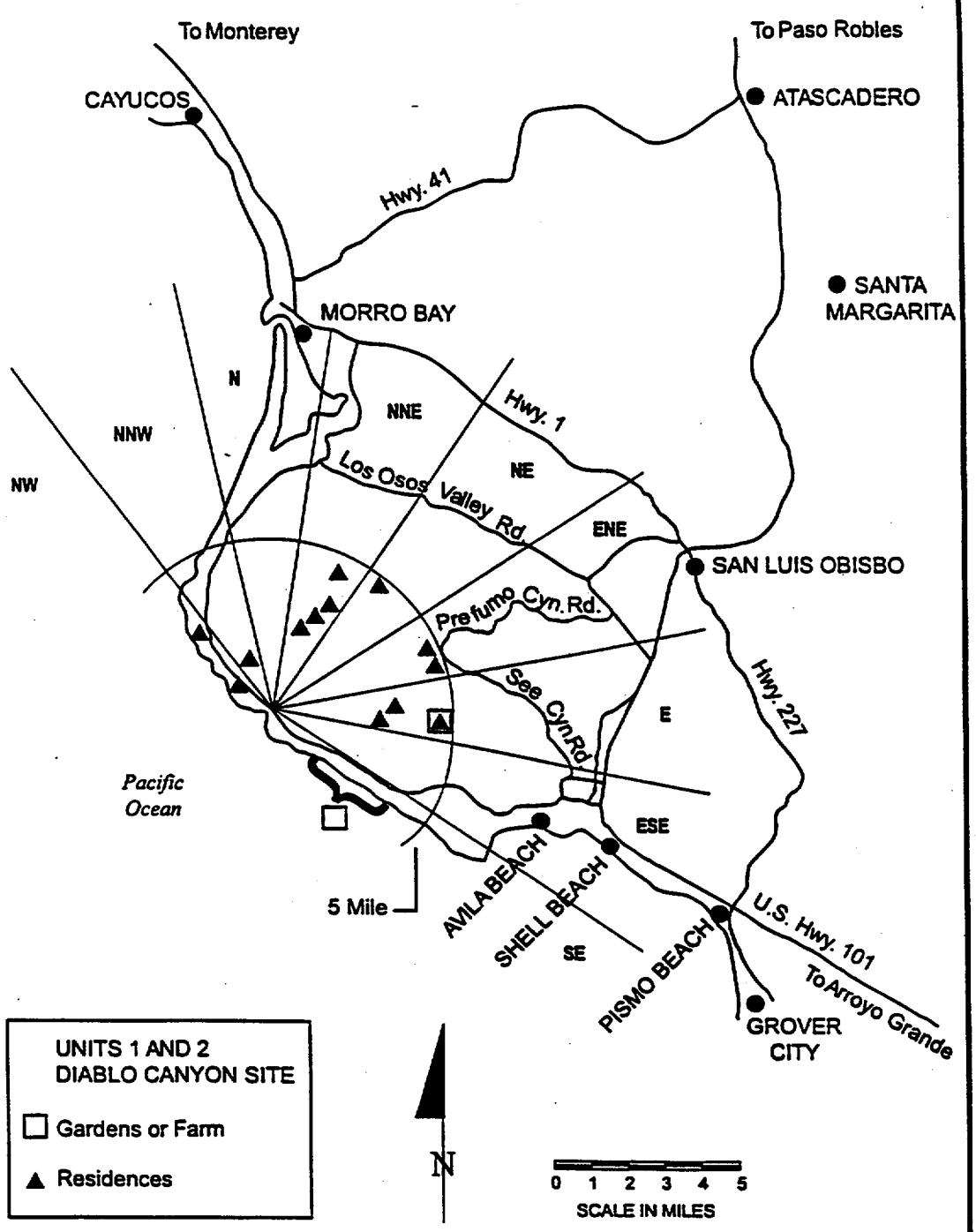

Figure 1. Units 1 and 2 Diablo Canyon Power Plant -Land Use Census.

970338/landuse/pc19