James S. Baumstark
Vice President
Nuclear Engineering

Consolidated Edison Company of New York, Inc.
Indian Point 2 Station
Broadway & Bleakley Avenue
Buchanan, New York 10511

Internet: baumstarkj@coned.com
Telephone: (914) 734-5354
Cellular: (914) 391-9005
Pager: (917) 457-9698
Fax: (914) 734-5718

April 18, 2000

Re: Indian Point Unit No. 2
Docket No. 50-247

Document Control Desk
US Nuclear Regulatory Commission
Mail Station P1-137
Washington, DC 20555-0001

Subject : Response to Request for Additional Information – Proposed Steam Generator Tube Examination Program – Supplement One (TAC No. MA8219)

Pursuant to 10 CFR 50.54(f), this letter provides the responses of Consolidated Edison Company of New York, Inc. (Con Edison) to Questions 2, 7, and 17 of NRC's request for additional information dated March 24, 2000 regarding the RFO 14 steam generator tube examination program. Additional RAI responses will be forthcoming as they become finalized.

No new regulatory commitments are being made by Con Edison in this correspondence.

Should you or your staff have any concerns regarding this matter, please contact Mr. John McCann, Manager, Nuclear Safety & Licensing.

Very truly yours,

Attachment

A001 1/1

Mr. Hubert J. Miller
Regional Administrator-Region I
US Nuclear Regulatory Commission
475 Allendale Road
King of Prussia, PA 19406

Mr. Jefferey F. Harold, Project Manager
Project Directorate I-1
Division of Regulatory Projects I/II
US Nuclear Regulatory Commission
Mail Stop 14B-2
Washington, DC 20555

Senior Resident Inspector
US Nuclear Regulatory Commission
PO Box 38
Buchanan, NY 10511

Attachment

Response to RAI Questions 2, 7, and 17

Consolidated Edison Company of New York, Inc.
Indian Point Unit No. 2
Docket No. 50-247
April 2000

Question 2

Provide the results of secondary side examinations completed during the 1997 and 2000 outages (i.e., hourglassing and other observations such as cracking of tube support plates (TSPs) for all TSPs. This should include videos of the hillside port examinations (and still photos if available) of the fifth and sixth support elevations.

Reply

Secondary side examinations of selected areas of the Indian Point 2 steam generators were performed in 1997 (Reference 1) and 2000 using a videoscope. Videotape recordings of specific examinations of the fifth and sixth support elevations were previously provided to NRC as requested. Flowslot hourglassing has shown no significant change since prior to 1984 (Figures 1-4). New through-ligament cracking was observed between the flowslots and Row 1 tube holes at approximately 20% of locations viewed. This is believed to result from the stress present in the TSPs that have existed since denting occurred in the late 1970s and not as the result of continued denting. There was no evidence of missing "stars" or other pieces from the TSPs.

Hand hole port examinations were performed from both the manway and nozzle sides of the steam generators. The ports used for these examinations were above the tubesheet and below TSP 1. The hillside port examinations were performed from ports cut into the transition cone of the steam generator. These ports line up with the underside of the first row U-bend and the top of the sixth TSP. Hillside ports in steam generators 21, 22, and 23 are on the manway side and in steam generator 24 on the nozzle side. The hillside ports for steam generators 21 and 24 were installed during the current outage, therefore no data exists for this location prior to 2000.

The ability to detect cracking was limited in certain locations and generators. Inaccessibility and focusing problems limited the views, and resulted in an incomplete picture of the state of hourglassing and ligament cracking in the higher TSPs. Where adequate field of view and detail existed, the flow slots were measured to determine the amount of closure (hourglassing) which had occurred. This information is summarized graphically in Figures 1 through 4 and includes data from previous outages where available. Although the examination did not include all flowslots, it did include each of the TSPs. The results are therefore considered to be representative of all locations in each of the four steam generators.

This data shows that the hourglassing of the flowslots occurred primarily prior to 1984 and has basically "leveled off" during the recent years. This observation would also indicate that the rate of TSP denting has greatly diminished.

The identification and location of TSP flowslot ligament cracking is included in Figures 5 through 9. These maps also include observations from previous outages and note the date when the cracks were first observed. New ligament cracks were observed during the 2000 inspection. The newly identified cracks were partly due to improved video resolution, and the ability to examine new locations for the first time. Table 1 provides a summary of newly observed cracking.

In addition to ligament cracking at flowslots, ligament cracks were observed between the first row of TSP flow holes and the Row 2 tube holes. This damage was also noted between some second row flow holes and the Row 3 tubes. There was no evidence of missing "stars" or other pieces from the TSPs.

Although the secondary side examination identified additional TSP ligament cracks, measurements of the flowslots showed that there was no significant increase in hourglassing since prior to 1984. The structural integrity of the TSPs with cracked ligaments was evaluated in 1997 (Reference 2). The analysis showed that the cracked ligaments were stable and would not become free during a steam line break or feed line break combined with an earthquake. Structural analysis of the TSPs is further addressed in the response to Question 5.

Deposit or corrosion product varied greatly in adjacent tube locations and by steam generator. Typically deposits were noted on the top surfaces of the TSPs and sludge collars exist around many steam generator tubes. In general cold leg areas had slightly more deposits than hot leg. The tube had a uniform scale which

had spalled in some locations. There was no observable difference in deposit and corrosion product accumulation from previous outages inspections.

References

1. "Indian Point Unit 2 Steam Generator Flow Slot Closure Measurements," Altran Corp., Letter Report No 00603B-001, dated March 23, 2000.
2. "Steam Generator Tube Support Plate Cracking Evaluation of the Indian Point 2 Steam Generators," Altran Corp., Technical Report No. 96254-TR-01, dated May, 1977.

Table 1 Total Number TSP Flowslot Ligament Cracks Observed in 2000 by TSP Elevation

	New through ligament crack	Partial crack which have grown through ligament	New partial cracks
TSP 1	1	4	1
TSP 2	5	1	3
TSP 3	1	0	2
TSP 4	0	0	2
TSP 5	5	0	1
TSP 6	0	0	0
Total	12	5	9

Figure 1

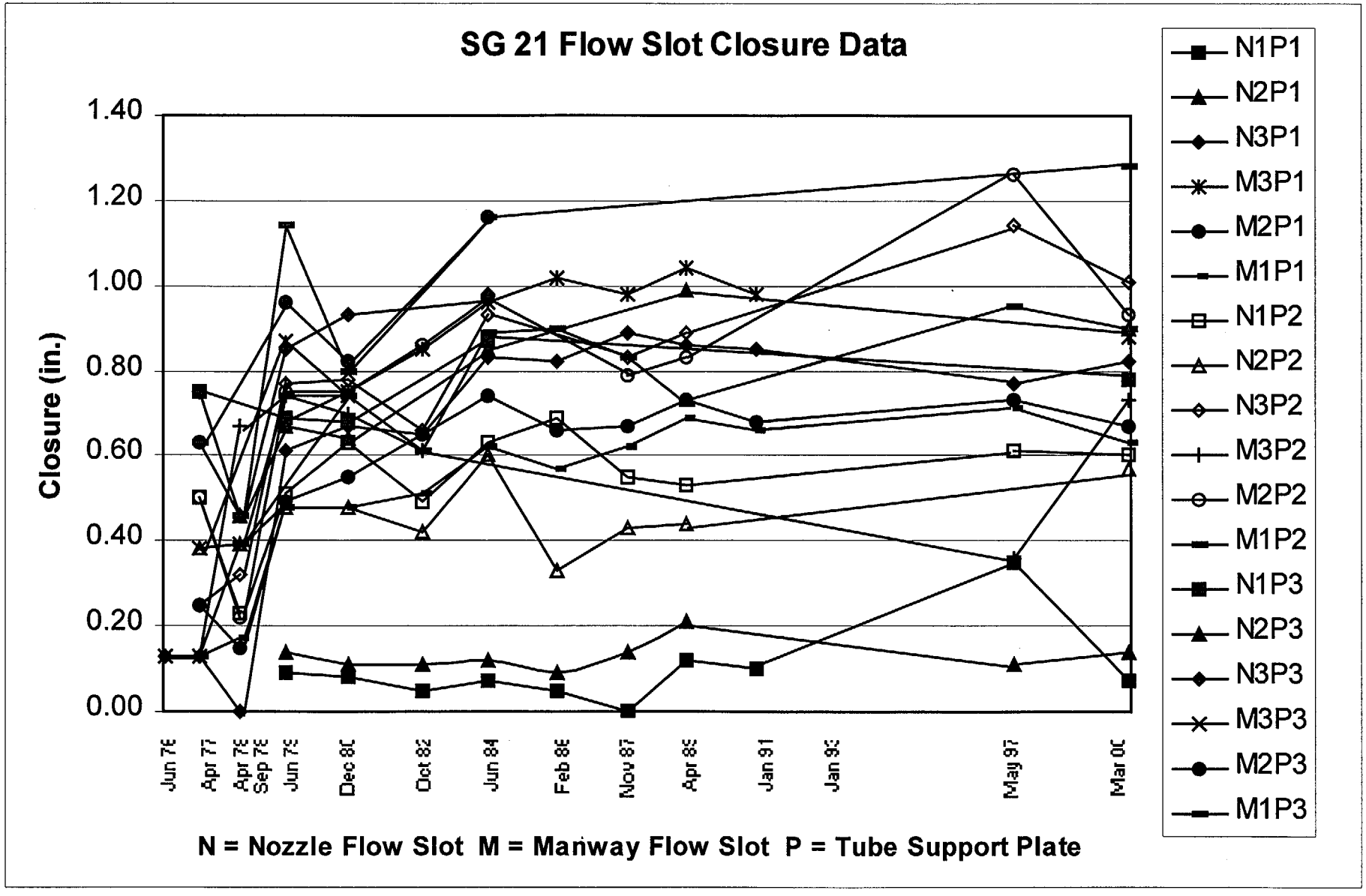
SG 21 Flow Slot Closure Data
Closure (in.)
1.40
1.20
1.00
0.80
0.60
0.40
0.20
0.00
Jun 76
Apr 77
Apr 78
Sep 78
Jun 79
Dec 80
Oct 82
Jun 84
Feb 86
Nov 87
Apr 89
Jan 91
Jan 93
May 97
Mar 00
N1P1
N2P1
N3P1
M3P1
M2P1
M1P1
N1P2
N2P2
N3P2
M3P2
M2P2
M1P2
N1P3
N2P3
N3P3
M3P3
M2P3
M1P3
N = Nozzle Flow Slot M = Manway Flow Slot P = Tube Support Plate

Figure 2

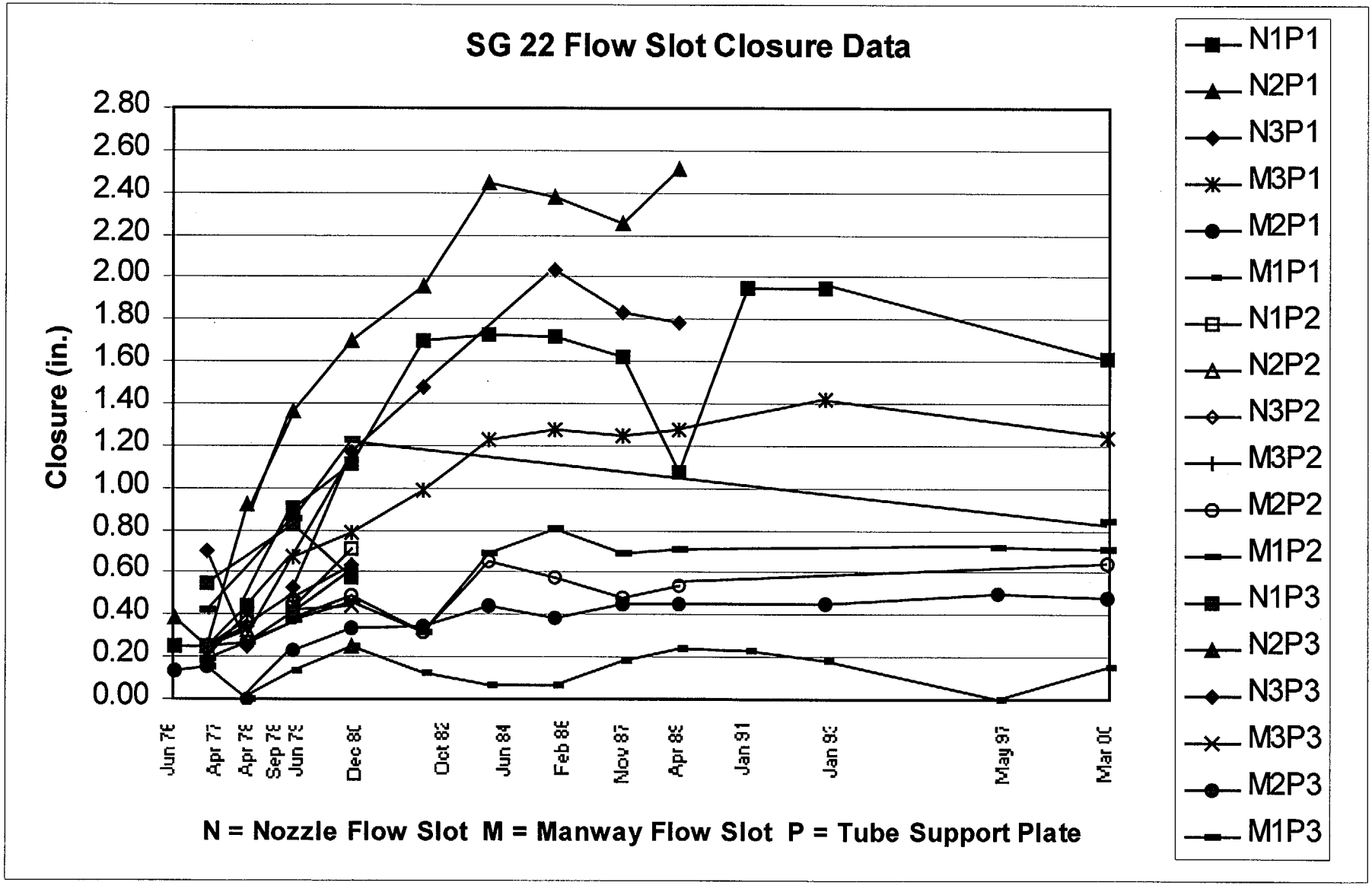
SG 22 Flow Slot Closure Data
Closure (in.)
2.80
2.60
2.40
2.20
2.00
1.80
1.60
1.40
1.20
1.00
0.80
0.60
0.40
0.20
0.00
Jun 76
Apr 77
Apr 78
Sep 78
Jun 79
Dec 80
Oct 82
Jun 84
Feb 86
Nov 87
Apr 89
Jan 91
Jan 93
May 97
Mar 00
N = Nozzle Flow Slot M = Manway Flow Slot P = Tube Support Plate
N1P1
N2P1
N3P1
M3P1
M2P1
M1P1
N1P2
N2P2
N3P2
M3P2
M2P2
M1P2
N1P3
N2P3
N3P3
M3P3
M2P3
M1P3

Figure 3

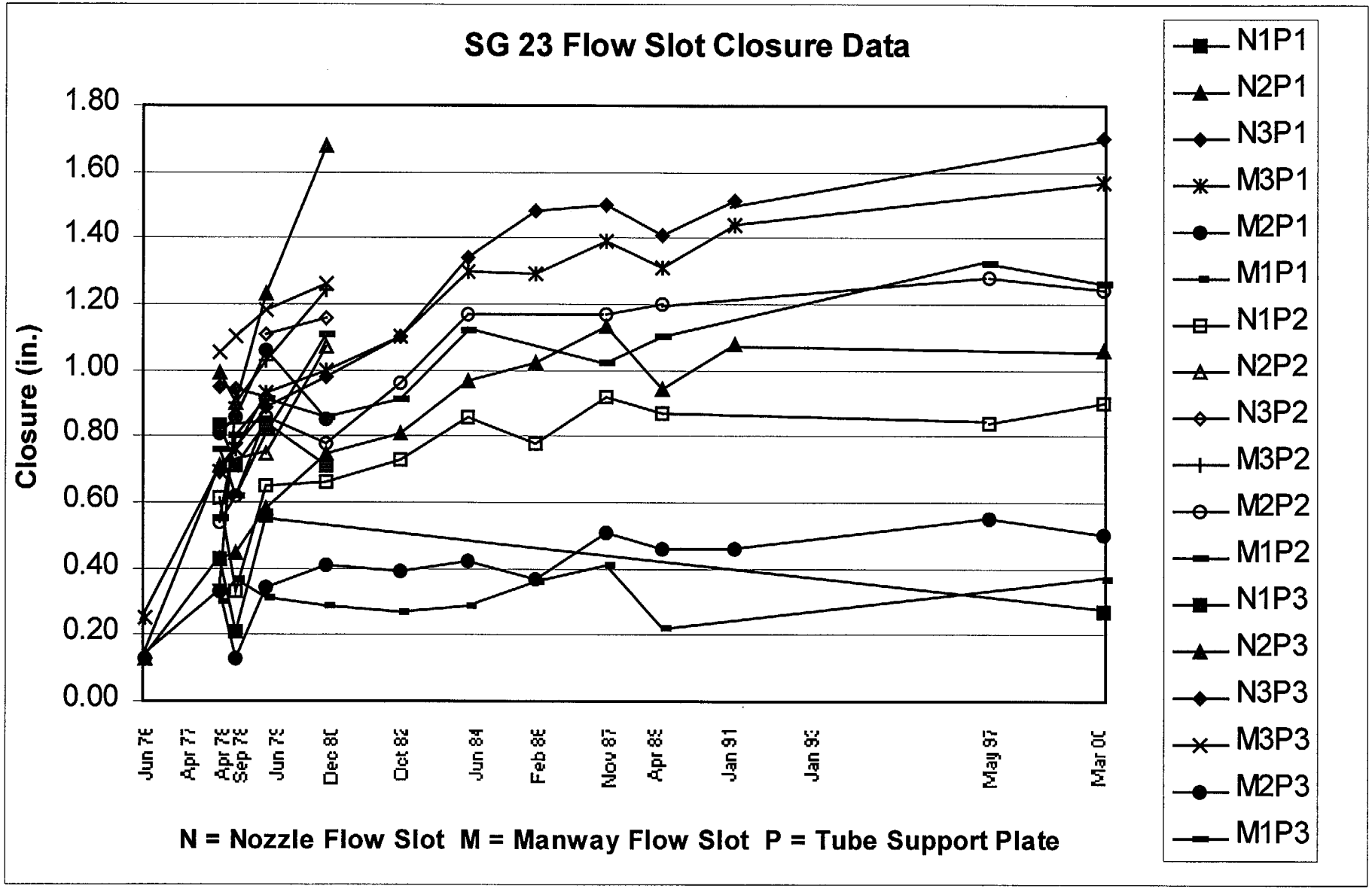
SG 23 Flow Slot Closure Data
Closure (in.)
1.80
1.60
1.40
1.20
1.00
0.80
0.60
0.40
0.20
0.00
Jun 76
Apr 77
Apr 78
Sep 78
Jun 79
Dec 80
Oct 82
Jun 84
Feb 86
Nov 87
Apr 89
Jan 91
Jan 93
May 97
Mar 00
N = Nozzle Flow Slot M = Manway Flow Slot P = Tube Support Plate
N1P1
N2P1
N3P1
M3P1
M2P1
M1P1
N1P2
N2P2
N3P2
M3P2
M2P2
M1P2
N1P3
N2P3
N3P3
M3P3
M2P3
M1P3

Figure 4

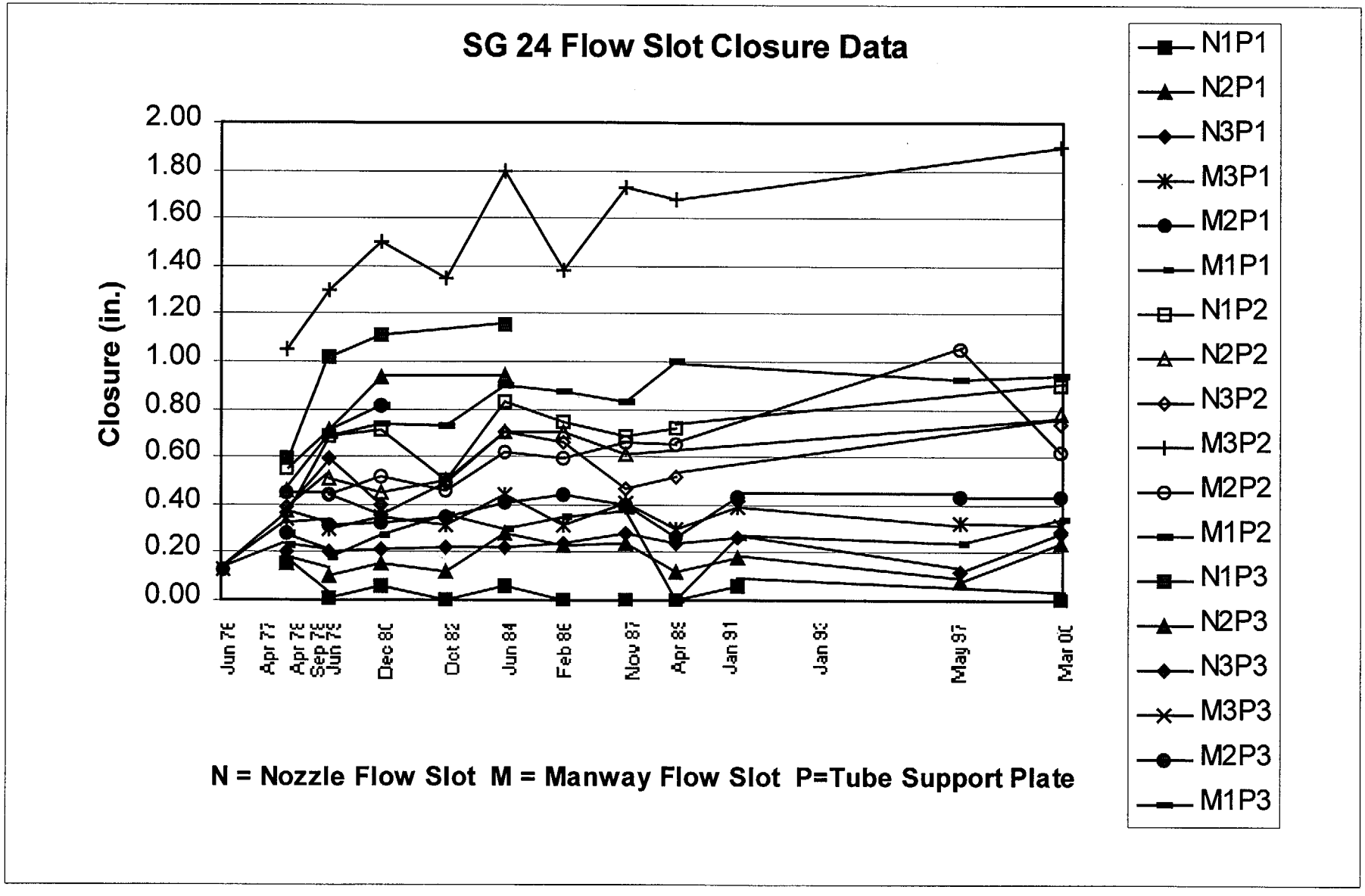
SG 24 Flow Slot Closure Data
Closure (in.)
2.00
1.80
1.60
1.40
1.20
1.00
0.80
0.60
0.40
0.20
0.00
Jun 76
Apr 77
Apr 78
Sep 78
Jun 79
Dec 80
Oct 82
Jun 84
Feb 86
Nov 87
Apr 89
Jan 91
Jan 93
May 97
Mar 00
N1P1
N2P1
N3P1
M3P1
M2P1
M1P1
N1P2
N2P2
N3P2
M3P2
M2P2
M1P2
N1P3
N2P3
N3P3
M3P3
M2P3
M1P3
N = Nozzle Flow Slot M = Manway Flow Slot P=Tube Support Plate

Figure 5 Flow Slot Ligament Cracking Map

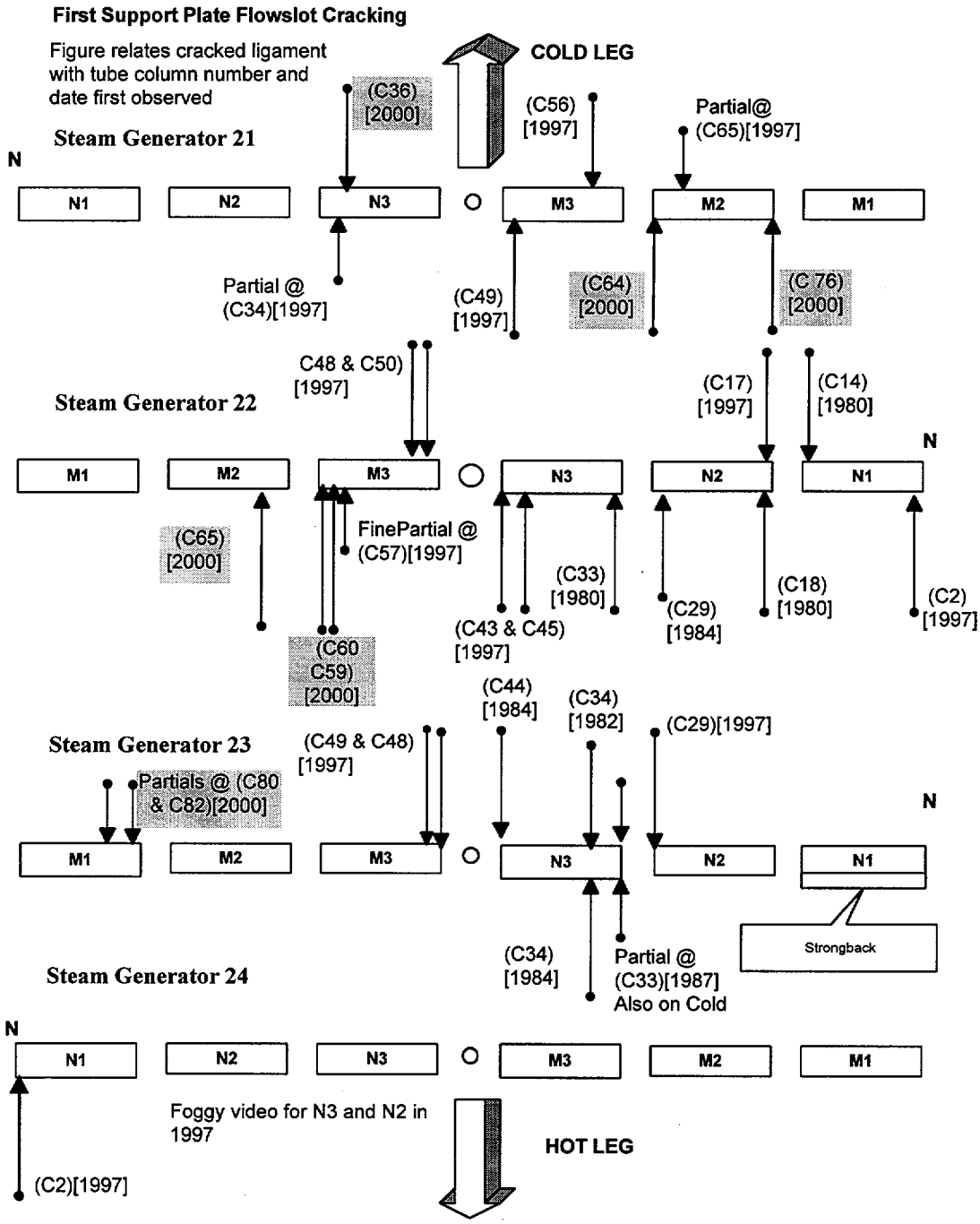

Figure 6 Flow Slot Ligament Cracking Map

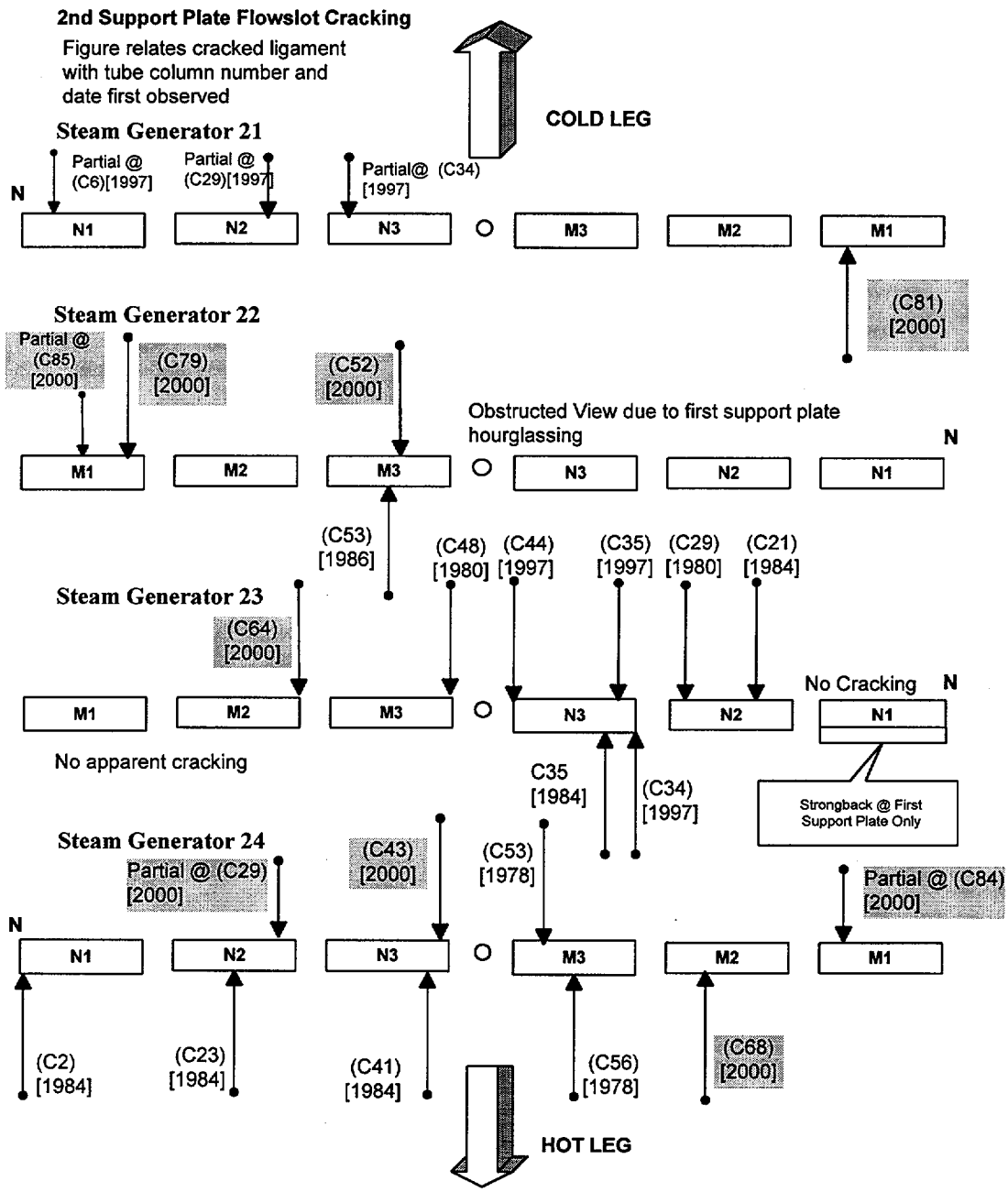

Figure 7 Flow Slot Ligament Cracking Map

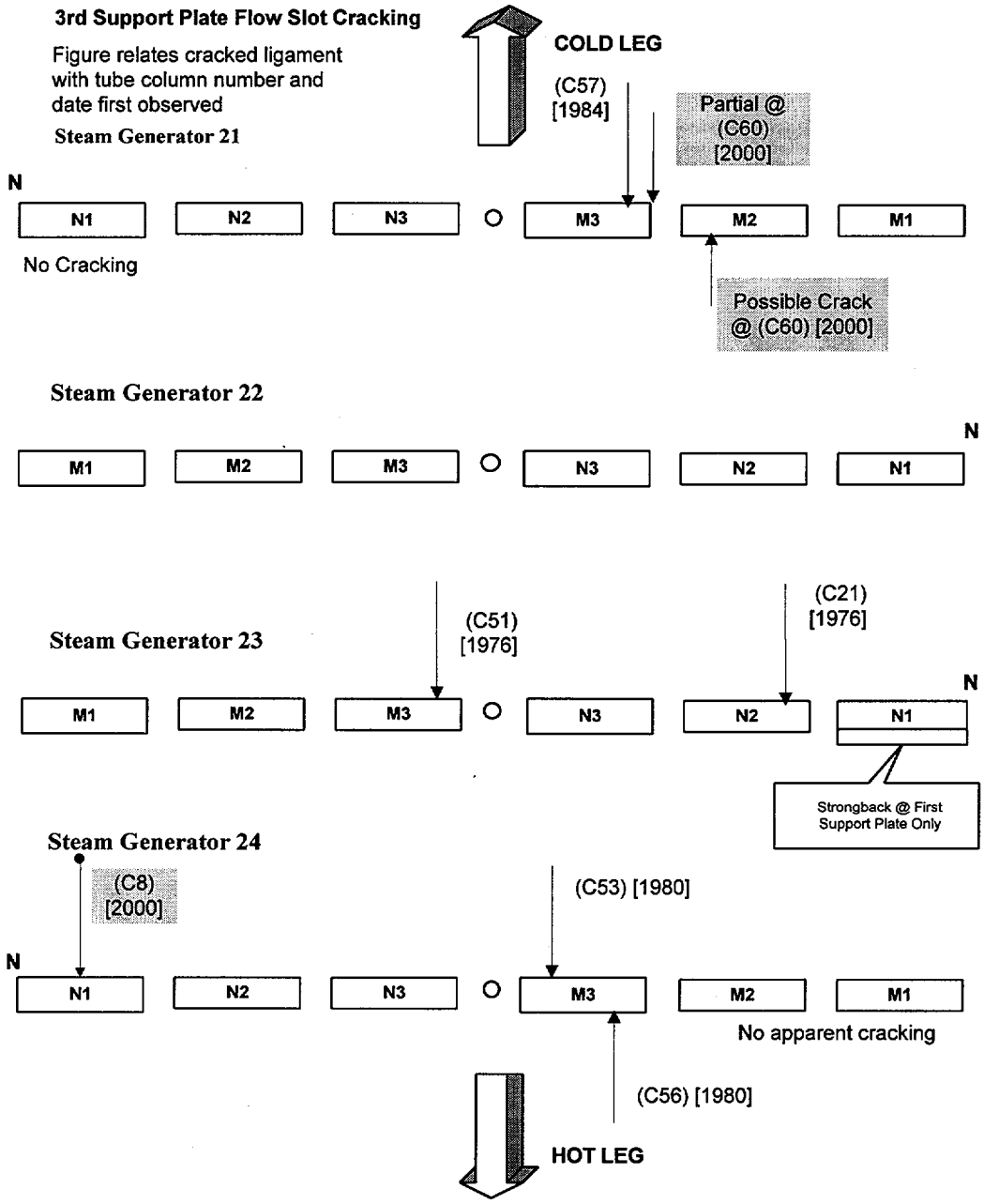

Figure 8 Flow Slot Ligament Cracking Map

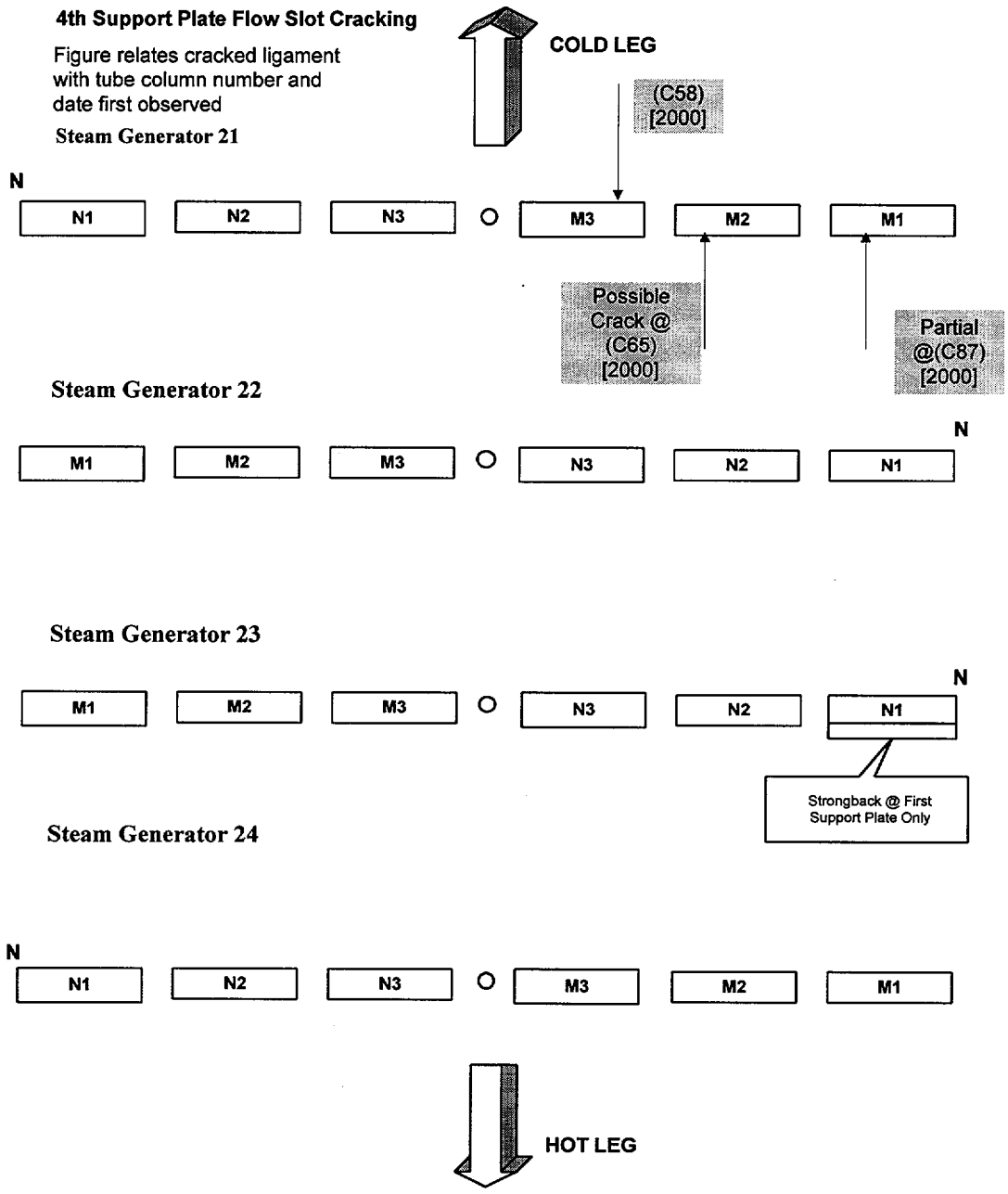

Figure 9 Flow Slot Ligament Cracking Map

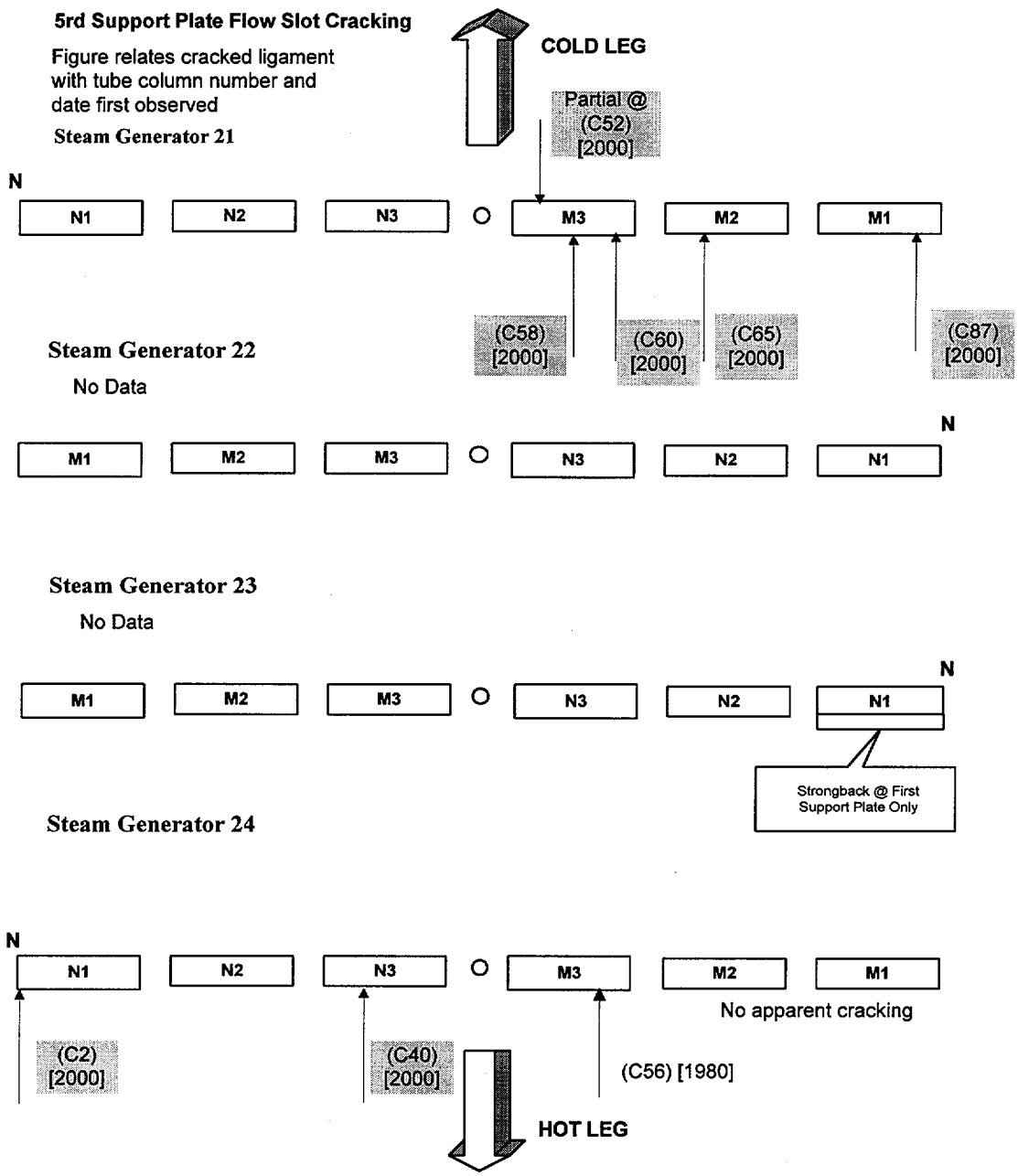

REFERENCE 1

altran

ALTRAN CORPORATION

451 D Street • Boston, MA 02210 • 617/204-1000 • Fax: 617/204-3080

March 23, 2000
00603B-001

Mr. Jimmy Mark
Consolidated Edison Company of New York, Inc.
1 Park Place
Peekskill NY 10566-3887

Subject: Letter Report -- Indian Point Unit 2 Steam Generator Flow Slot Closure Measurements

Dear Mr. Mark:

At your request, Altran Corporation has completed measurement of flow slot closure for the 1997 and 2000 visual inspections of the Indian Point Unit 2 steam generators. These measurements were obtained using a methodology similar to that described in Addendum 1 to the Indian Point Unit 2 Steam Generator Status Report.

Historically, the plant staff has been manually recording flow slot closure measurements on the following drawings. This historical data includes flow slot closure measurements obtained during each visual examination of the steam generator flow slots from June 1976 through January 1993.

Indian Point Steam Generator No. 21 Tube Identification Using Zetec Templates	A206613-6 (mark-up)
Indian Point Steam Generator No. 22 Tube Identification Using Zetec Templates	A206614-7 (mark-up)
Indian Point Steam Generator No. 23 Tube Identification Using Zetec Templates	A206615-6 (mark-up)
Indian Point Steam Generator No. 24 Tube Identification Using Zetec Templates	A206616-6 (mark-up)

Altran transcribed the historical flow slot measurement data into an Excel file. Subsequently, we supplemented this file with the flow slot closure measurements we obtained from the May 1997 and March 2000 visual inspection videotapes. A copy of this composite file is presented in the attachment spreadsheets. A description of the methodology used to obtain the 1997 and 2000 flow slot measurements also is attached.

The flow slot closure data presented in this letter was collected by scaling images and should be considered appropriate for overall trending only. Please find attached plots of the data for the first three support plates to illustrate the general trend of flow slot closure in each steam generator.

Altran's efforts also included a review of the ligament crack annotations recorded on the drawings to similar data we retrieved and verified earlier in support of a tube plugging recommendation. All discrepancies were investigated and resolved prior to completion of the Excel file.

The work required to compile the data presented in this letter was performed at ConEdison's facilities in Buchanan, NY under the direct supervision of and using data and images provided by ConEdison. The flow slot closure measurement data and ligament crack identification contained in the attached spreadsheets is a complete compilation of such data from plant records made available for our review.

Should you have any questions or desire additional information, please do not hesitate to contact us.

Very truly yours,

ALTRAN CORPORATION

Richard L. Martin
Senior Project Engineer

for Petris Skulte
Senior Consultant

Willaim J. McBrine
Manager, Engineering Mechanics and Materials
Project Manager

RLM/jak

Attachments

cc: T Esselman
F. Elsabee
P. Habicht

FLOW SLOT CLOSURE
SG 21

		Support Plate # 1					Comments		Support Plate # 2					Comments
Date	N1	N2	N3	M3	M2	M1		N1	N2	N3	M3	M2	M1	
Jun-76	0.00	0.00	0.13	0.13	0.00	0.00		---	---	---	---	---	---	
Apr-77	0.00	0.00	0.13	0.13	0.25	0.13		0.50	0.38	0.25	0.13	0.50	---	
Apr-78	0.00	0.00	0.00	0.39	0.15	0.17		0.23	0.39	0.32	0.67	0.22	0.39	
Sep-78	---	---	---	---	---	---		---	---	---	---	---	---	
Jun-79	0.09	0.14	0.61	0.68	0.49	0.48		0.51	0.48	0.77	0.74	0.75	0.74	
Dec-80	0.08	0.11	0.67	0.75	0.55	0.48		0.63	0.48	0.78	0.70	0.75	0.74	
Oct-82	0.05	0.11	0.65	0.85	0.65	0.51		0.49	0.42	0.66	0.61	0.86	0.61	
Jun-84	0.07	0.12	0.83	0.96	0.74	0.62		0.63	0.60	0.93	---	0.97	0.89	
Feb-86	0.05	0.09	0.82	1.02	0.66	0.57		0.69	0.33	---	---	---	0.90	
Nov-87	0.00	0.14	0.89	0.98	0.67	0.62		0.55	0.43	0.83	---	0.79	0.83	
Apr-89	0.12	0.21	0.86	1.04	0.73	0.69		0.53	0.44	0.89	---	0.83	0.72	
Jan-91	0.10	---	0.85	0.98	0.68	0.66		---	---	---	---	---	---	
Jan-93	---	---	---	---	---	---		---	---	---	---	---	---	
May-97	0.35	0.11	0.77	---	0.73	0.71	M3 Cracked; N3, M2 (7) Partial Cracks	0.61	---	1.14	0.36	1.26	0.95	N1, N2, N3 Partial Cracks
Mar-00	---	---	---	---	---	---		---	---	---	---	---	---	

		Support Plate # 3					Comments		Support Plate # 4					Comments
Date	N1	N2	N3	M3	M2	M1		N1	N2	N3	M3	M2	M1	
Jun-76	---	---	---	---	---	---		---	---	---	---	---	---	
Apr-77	0.75	---	0.75	0.38	0.63	0.63		---	---	---	---	---	---	
Apr-78	---	0.46	0.46	---	---	0.46		---	---	---	---	---	---	
Sep-78	---	---	---	---	---	---		---	---	---	---	---	---	
Jun-79	0.69	0.67	0.85	0.87	0.96	1.14		---	---	---	---	---	---	
Dec-80	0.68	0.64	0.93	0.74	0.82	0.80		0.80	---	0.97	0.60	0.65	1.16	
Oct-82	---	---	---	---	---	---		---	---	---	---	---	---	
Jun-84	0.87	0.85	0.98	---	1.16	1.16	M3 Cracked	---	---	---	---	---	---	
Feb-86	---	---	---	---	---	---	M3 Cracked	---	---	---	---	---	---	
Nov-87	---	---	---	---	---	---	M3 Cracked	---	---	---	---	---	---	
Apr-89	---	0.99	---	---	---	---	M3 Cracked	---	---	---	---	---	---	
Jan-91	---	---	---	---	---	---	M3 Cracked	---	---	---	---	---	---	
Jan-93	---	---	---	---	---	---	M3 Cracked	---	---	---	---	---	---	
May-97	---	---	---	---	---	---	M3 Cracked	---	---	---	---	---	---	
Mar-00	---	---	---	---	---	---		---	---	---	---	---	---	

FLOW SLOT CLOSURE
SG 22

		Support Plate # 1					Comments		Support Plate # 2					Comments
Date	N1	N2	N3	M3	M2	M1		N1	N2	N3	M3	M2	M1	
Jun-76	0.00	0.13	0.13	0.25	0.13	0.00		---	---	---	---	---	---	
Apr-77	---	---	---	---	---	---		---	---	---	---	---	---	
Apr-78	0.43	0.43	0.69	0.69	0.33	0.30		0.61	0.71	0.95	0.35	0.54	0.55	
Sep-78	0.21	0.45	---	0.76	0.13	0.37		0.33	---	---	0.90	0.62	0.80	
Jun-79	0.56	0.58	0.89	0.93	0.34	0.31		0.65	0.75	1.11	1.03	0.86	0.91	
Dec-80	---	0.75	0.98	1.00	0.41	0.29		0.66	1.07	1.16	1.24	0.78	0.86	N2, M3 Cracked
Oct-82	---	0.81	1.10	1.10	0.39	0.27	N3 Cracked	0.73	---	---	---	0.96	0.91	N2, M3 Cracked
Jun-84	---	0.97	1.34	1.30	0.42	0.29	N3(2) Cracked	0.86	---	---	---	1.17	1.12	N2(2), N3, M3 Cracked
Feb-86	---	1.02	1.48	1.29	0.37	0.36	N3(2) Cracked	0.78	---	---	---	---	---	N2(2), N3, M3 Cracked
Nov-87	---	1.13	1.50	1.39	0.51	0.41	N3(3) Cracked	0.92	---	---	---	1.17	1.02	N2(2), N3, M3 Cracked
Apr-89	---	0.94	1.41	1.31	0.46	0.22	N3(3) Cracked	0.87	---	---	---	1.20	1.10	N2(2), N3, M3 Cracked
Jan-91	---	1.08	1.51	1.44	0.46	---	N3(3) Cracked		---	---	---	---	---	N2(2), N3, M3 Cracked
Jan-93	---	---	---	---	---	---		---	---	---	---	---	---	
May-97	---	---	---	---	0.55	---	N2, N3(3), M3(2) Cracked; N3(2) Partial Cracks	0.84	---	---	---	1.28	1.32	N2(2), N3(4), M3 Cracked
Mar-00	---	---	---	---	---	---		---	---	---	---	---	---	

		Support Plate # 3					Comments		Support Plate # 4					Comments
Date	N1	N2	N3	M3	M2	M1		N1	N2	N3	M3	M2	M1	
Jun-76	---	---	---	---	---	---	N2, M3 Cracked	---	---	---	---	---	---	N2 Cracked
Apr-77	---	---	---	---	---	---		---	---	---	---	---	---	
Apr-78	0.83	0.99	0.95	1.05	0.81	0.76	N2, M3 Cracked	---	---	---	---	---	---	N2 Cracked
Sep-78	0.71	0.90	0.94	1.10	0.86	0.62	N2, M3 Cracked	0.80	1.00	---	---	---	---	N2 Cracked
Jun-79	0.84	1.23	0.92	1.18	1.06	0.81	N2, M3 Cracked	0.88	1.04	---	---	---	---	N2 Cracked
Dec-80	0.71	1.68	---	1.26	0.85	1.11	N2, M3 Cracked	0.98	1.29	---	---	0.68	0.79	N2 Cracked
Oct-82	---	---	---	---	---	---	N2, M3 Cracked	---	---	---	---	---	---	N2 Cracked
Jun-84	---	---	---	---	---	---	N2, M3 Cracked	---	---	---	---	---	---	N2 Cracked
Feb-86	---	---	---	---	---	---	N2, M3 Cracked	---	---	---	---	---	---	N2 Cracked
Nov-87	---	---	---	---	---	---	N2, M3 Cracked	---	---	---	---	---	---	N2 Cracked
Apr-89	---	---	---	---	---	---	N2, M3 Cracked	---	---	---	---	---	---	N2 Cracked
Jan-91	---	---	---	---	---	---	N2, M3 Cracked	---	---	---	---	---	---	N2 Cracked
Jan-93	---	---	---	---	---	---		---	---	---	---	---	---	
May-97	---	---	---	---	---	---	N2, M3 Cracked	---	---	---	---	---	---	N2 Cracked
Mar-00	---	---	---	---	---	---		---	---	---	---	---	---	

FLOW SLOT CLOSURE
SG 23

		Support Plate # 1					Comments		Support Plate # 2					Comments
Date	N1	N2	N3	M3	M2	M1		N1	N2	N3	M3	M2	M1	
Jun-76	0.00	0.13	0.13	0.25	0.13	0.00		---	---	---	---	---	---	
Apr-77	---	---	---	---	---	---		---	---	---	---	---	---	
Apr-78	0.43	0.43	0.69	0.69	0.33	0.30		0.61	0.71	0.95	0.35	0.54	0.55	
Sep-78	0.21	0.45	---	0.76	0.13	0.37		0.33	---	---	0.90	0.62	0.80	
Jun-79	0.56	0.58	0.89	0.93	0.34	0.31		0.65	0.75	1.11	1.03	0.86	0.91	
Dec-80	---	0.75	0.98	1.00	0.41	0.29		0.66	1.07	1.16	1.24	0.78	0.86	N2, M3 Cracked
Oct-82	---	0.81	1.10	1.10	0.39	0.27	N3 Cracked	0.73	---	---	---	0.96	0.91	N2, M3 Cracked
Jun-84	---	0.97	1.34	1.30	0.42	0.29	N3(2) Cracked	0.86	---	---	---	1.17	1.12	N2(2), N3, M3 Cracked
Feb-86	---	1.02	1.48	1.29	0.37	0.36	N3(2) Cracked	0.78	---	---	---	---	---	N2(2), N3, M3 Cracked
Nov-87	---	1.13	1.50	1.39	0.51	0.41	N3(3) Cracked	0.92	---	---	---	1.17	1.02	N2(2), N3, M3 Cracked
Apr-89	---	0.94	1.41	1.31	0.46	0.22	N3(3) Cracked	0.87	---	---	---	1.20	1.10	N2(2), N3, M3 Cracked
Jan-91	---	1.08	1.51	1.44	0.46	---	N3(3) Cracked		---	---	---	---	---	N2(2), N3, M3 Cracked
Jan-93	---	---	---	---	---	---		---	---	---	---	---	---	
May-97	---	---	---	---	0.55	---	N2, N3(3), M3(2) Cracked; N3(2) Partial Cracks	0.84	---	---	---	1.28	1.32	N2(2), N3(4), M3 Cracked
Mar-00	---	---	---	---	---	---		---	---	---	---	---	---	

		Support Plate # 3					Comments		Support Plate # 4					Comments
Date	N1	N2	N3	M3	M2	M1		N1	N2	N3	M3	M2	M1	
Jun-76	---	---	---	---	---	---	N2, M3 Cracked	---	---	---	---	---	---	N2 Cracked
Apr-77	---	---	---	---	---	---		---	---	---	---	---	---	
Apr-78	0.83	0.99	0.95	1.05	0.81	0.76	N2, M3 Cracked	---	---	---	---	---	---	N2 Cracked
Sep-78	0.71	0.90	0.94	1.10	0.86	0.62	N2, M3 Cracked	0.80	1.00	---	---	---	---	N2 Cracked
Jun-79	0.84	1.23	0.92	1.18	1.06	0.81	N2, M3 Cracked	0.88	1.04	---	---	---	---	N2 Cracked
Dec-80	0.71	1.68	---	1.26	0.85	1.11	N2, M3 Cracked	0.98	1.29	---	---	0.68	0.79	N2 Cracked
Oct-82	---	---	---	---	---	---	N2, M3 Cracked	---	---	---	---	---	---	N2 Cracked
Jun-84	---	---	---	---	---	---	N2, M3 Cracked	---	---	---	---	---	---	N2 Cracked
Feb-86	---	---	---	---	---	---	N2, M3 Cracked	---	---	---	---	---	---	N2 Cracked
Nov-87	---	---	---	---	---	---	N2, M3 Cracked	---	---	---	---	---	---	N2 Cracked
Apr-89	---	---	---	---	---	---	N2, M3 Cracked	---	---	---	---	---	---	N2 Cracked
Jan-91	---	---	---	---	---	---	N2, M3 Cracked	---	---	---	---	---	---	N2 Cracked
Jan-93	---	---	---	---	---	---		---	---	---	---	---	---	
May-97	---	---	---	---	---	---	N2, M3 Cracked	---	---	---	---	---	---	N2 Cracked
Mar-00	---	---	---	---	---	---		---	---	---	---	---	---	

FLOW SLOT CLOSURE
SG 24

		Support Plate # 1					Comments		Support Plate # 2					Comments
Date	N1	N2	N3	M3	M2	M1		N1	N2	N3	M3	M2	M1	
Jun-76	0.00	0.13	0.13	0.25	0.13	0.00		---	---	---	---	---	---	
Apr-77	---	---	---	---	---	---		---	---	---	---	---	---	
Apr-78	0.43	0.43	0.69	0.69	0.33	0.30		0.61	0.71	0.95	0.35	0.54	0.55	
Sep-78	0.21	0.45	---	0.76	0.13	0.37		0.33	---	---	0.90	0.62	0.80	
Jun-79	0.56	0.58	0.89	0.93	0.34	0.31		0.65	0.75	1.11	1.03	0.86	0.91	
Dec-80	---	0.75	0.98	1.00	0.41	0.29		0.66	1.07	1.16	1.24	0.78	0.86	N2, M3 Cracked
Oct-82	---	0.81	1.10	1.10	0.39	0.27	N3 Cracked	0.73	---	---	---	0.96	0.91	N2, M3 Cracked
Jun-84	---	0.97	1.34	1.30	0.42	0.29	N3(2) Cracked	0.86	---	---	---	1.17	1.12	N2(2), N3, M3 Cracked
Feb-86	---	1.02	1.48	1.29	0.37	0.36	N3(2) Cracked	0.78	---	---	---	---	---	N2(2), N3, M3 Cracked
Nov-87	---	1.13	1.50	1.39	0.51	0.41	N3(3) Cracked	0.92	---	---	---	1.17	1.02	N2(2), N3, M3 Cracked
Apr-89	---	0.94	1.41	1.31	0.46	0.22	N3(3) Cracked	0.87	---	---	---	1.20	1.10	N2(2), N3, M3 Cracked
Jan-91	---	1.08	1.51	1.44	0.46	---	N3(3) Cracked		---	---	---	---	---	N2(2), N3, M3 Cracked
Jan-93	---	---	---	---	---	---		---	---	---	---	---	---	
May-97	---	---	---	---	0.55	---	N2, N3(3), M3(2) Cracked; N3(2) Partial Cracks	0.84	---	---	---	1.28	1.32	N2(2), N3(4), M3 Cracked
Mar-00	---	---	---	---	---	---		---	---	---	---	---	---	

		Support Plate # 3					Comments		Support Plate # 4					Comments
Date	N1	N2	N3	M3	M2	M1		N1	N2	N3	M3	M2	M1	
Jun-76	---	---	---	---	---	---	N2, M3 Cracked	---	---	---	---	---	---	N2 Cracked
Apr-77	---	---	---	---	---	---		---	---	---	---	---	---	
Apr-78	0.83	0.99	0.95	1.05	0.81	0.76	N2, M3 Cracked	---	---	---	---	---	---	N2 Cracked
Sep-78	0.71	0.90	0.94	1.10	0.86	0.62	N2, M3 Cracked	0.80	1.00	---	---	---	---	N2 Cracked
Jun-79	0.84	1.23	0.92	1.18	1.06	0.81	N2, M3 Cracked	0.88	1.04	---	---	---	---	N2 Cracked
Dec-80	0.71	1.68	---	1.26	0.85	1.11	N2, M3 Cracked	0.98	1.29	---	---	0.68	0.79	N2 Cracked
Oct-82	---	---	---	---	---	---	N2, M3 Cracked	---	---	---	---	---	---	N2 Cracked
Jun-84	---	---	---	---	---	---	N2, M3 Cracked	---	---	---	---	---	---	N2 Cracked
Feb-86	---	---	---	---	---	---	N2, M3 Cracked	---	---	---	---	---	---	N2 Cracked
Nov-87	---	---	---	---	---	---	N2, M3 Cracked	---	---	---	---	---	---	N2 Cracked
Apr-89	---	---	---	---	---	---	N2, M3 Cracked	---	---	---	---	---	---	N2 Cracked
Jan-91	---	---	---	---	---	---	N2, M3 Cracked	---	---	---	---	---	---	N2 Cracked
Jan-93	---	---	---	---	---	---		---	---	---	---	---	---	
May-97	---	---	---	---	---	---	N2, M3 Cracked	---	---	---	---	---	---	N2 Cracked
Mar-00	---	---	---	---	---	---		---	---	---	---	---	---	

Flow Slot Closure Measurement Methodology
May 1997 and March 2000 Videotapes
Indian Point Unit 2 Steam Generators

Measurement of flow slot closure for the May 1997 and March 2000 inspections were made using videotape records of the inspections. The basic methodology was similar to that detailed in Appendix I to Addendum 1 of the Indian Point 2 Steam Generator Status Report.

Flow slot closure was determined as follows:

1. A video view of the entire slot was projected onto a screen to produce an image of at least full size.

2. The width of the slot at each end was measured directly on the screen and recorded as values for A and B.

3. The width of the narrowest open space between the opposing sides of the flow slot was measured directly on the screen and recorded as a value for X.

4. Calculation:

   a. Assume that the flow slot width is 2.75 in. as specified by Westinghouse. Then the flow slot image width is:

   $$C = \frac{A + B}{2}$$

   b. The amount of flow slot closure is determined by:

   $$DX = \frac{2.75\,(C - X)}{C}$$

5. Error Analysis

   Because this methodology involved scaling of videotape images to determine the amount of flow slot closure, the data should be considered approximate. This data is intended to exhibit overall trending only.

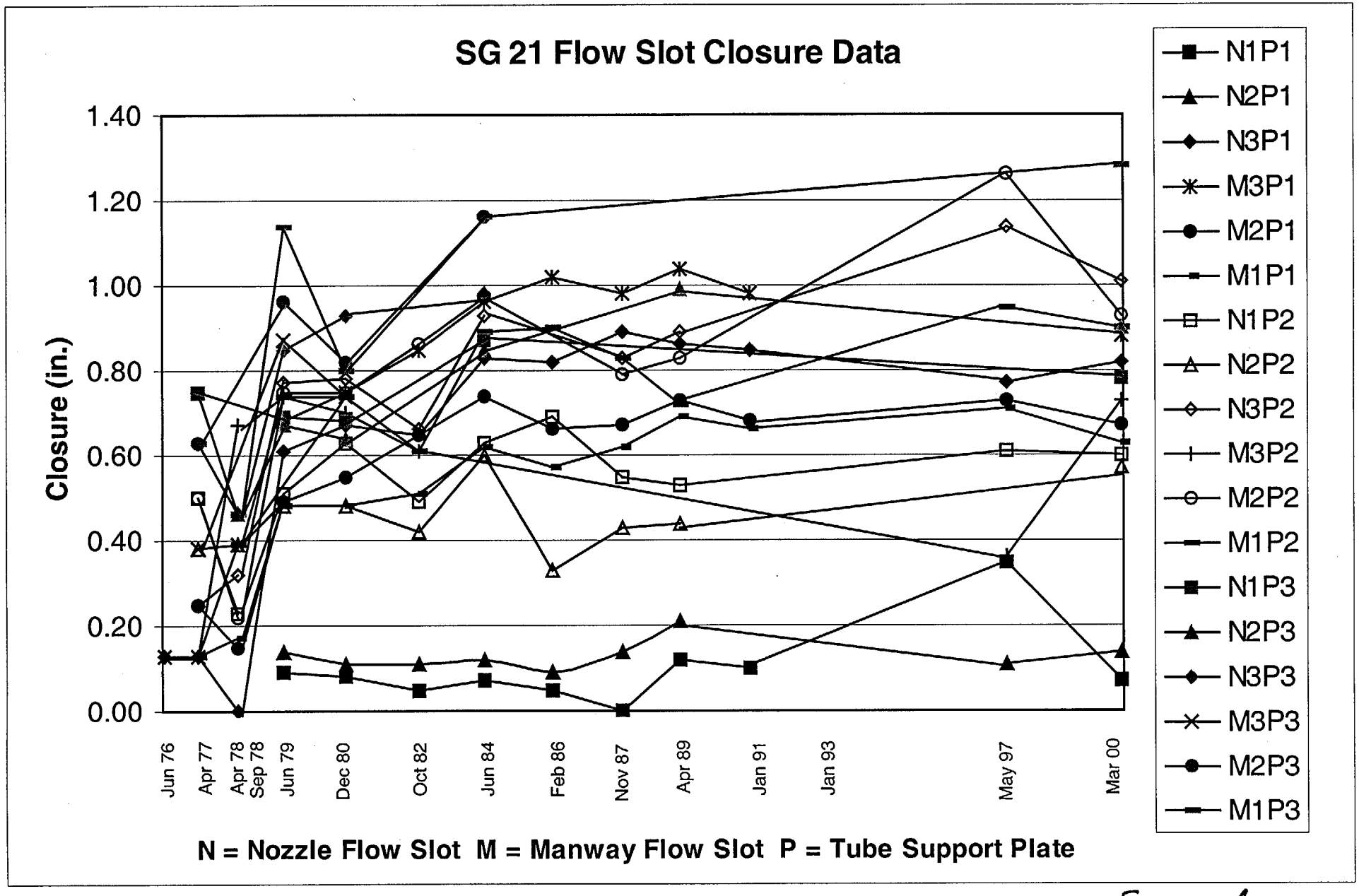
SG 21 Flow Slot Closure Data
Closure (in.)
1.40
1.20
1.00
0.80
0.60
0.40
0.20
0.00
Jun 76
Apr 77
Apr 78
Sep 78
Jun 79
Dec 80
Oct 82
Jun 84
Feb 86
Nov 87
Apr 89
Jan 91
Jan 93
May 97
Mar 00
N1P1
N2P1
N3P1
M3P1
M2P1
M1P1
N1P2
N2P2
N3P2
M3P2
M2P2
M1P2
N1P3
N2P3
N3P3
M3P3
M2P3
M1P3
N = Nozzle Flow Slot M = Manway Flow Slot P = Tube Support Plate

FIGURE 1

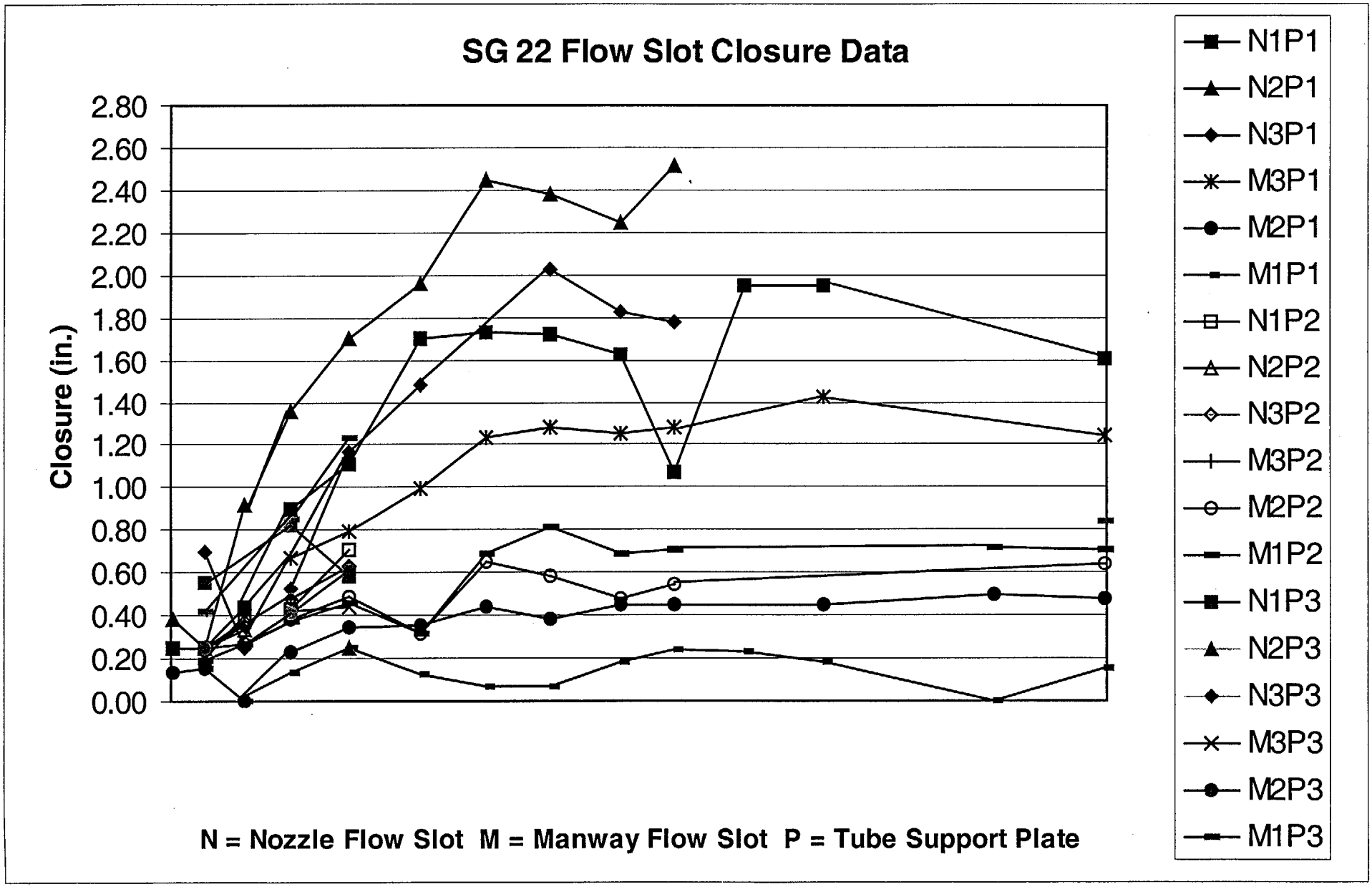
SG 22 Flow Slot Closure Data
Closure (in.)
2.80
2.60
2.40
2.20
2.00
1.80
1.60
1.40
1.20
1.00
0.80
0.60
0.40
0.20
0.00
N1P1
N2P1
N3P1
M3P1
M2P1
M1P1
N1P2
N2P2
N3P2
M3P2
M2P2
M1P2
N1P3
N2P3
N3P3
M3P3
M2P3
M1P3
N = Nozzle Flow Slot M = Manway Flow Slot P = Tube Support Plate

FIGURE 2

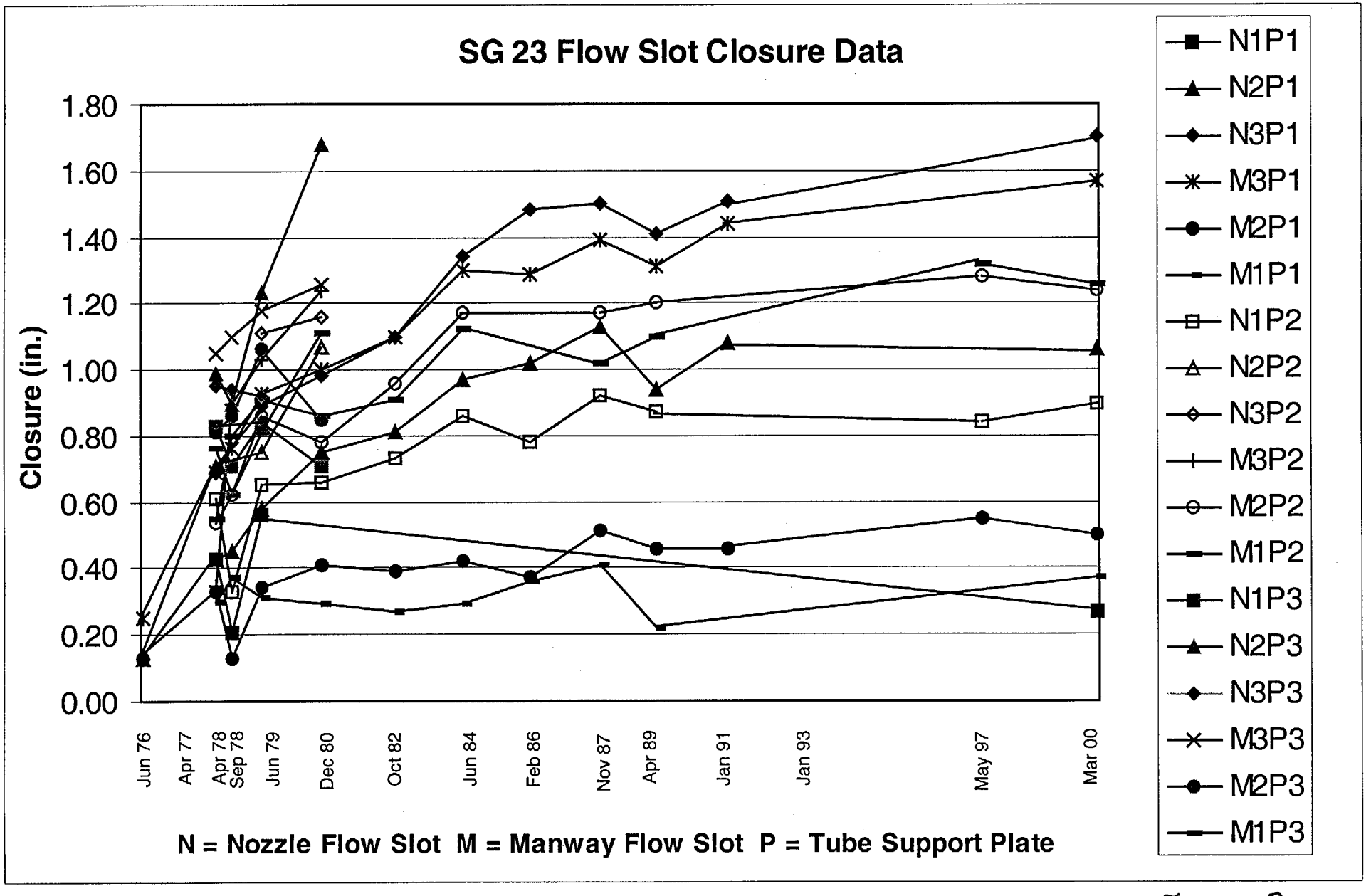
SG 23 Flow Slot Closure Data
Closure (in.)
1.80
1.60
1.40
1.20
1.00
0.80
0.60
0.40
0.20
0.00
Jun 76
Apr 77
Apr 78
Sep 78
Jun 79
Dec 80
Oct 82
Jun 84
Feb 86
Nov 87
Apr 89
Jan 91
Jan 93
May 97
Mar 00
N1P1
N2P1
N3P1
M3P1
M2P1
M1P1
N1P2
N2P2
N3P2
M3P2
M2P2
M1P2
N1P3
N2P3
N3P3
M3P3
M2P3
M1P3
N = Nozzle Flow Slot M = Manway Flow Slot P = Tube Support Plate

FIGURE 3

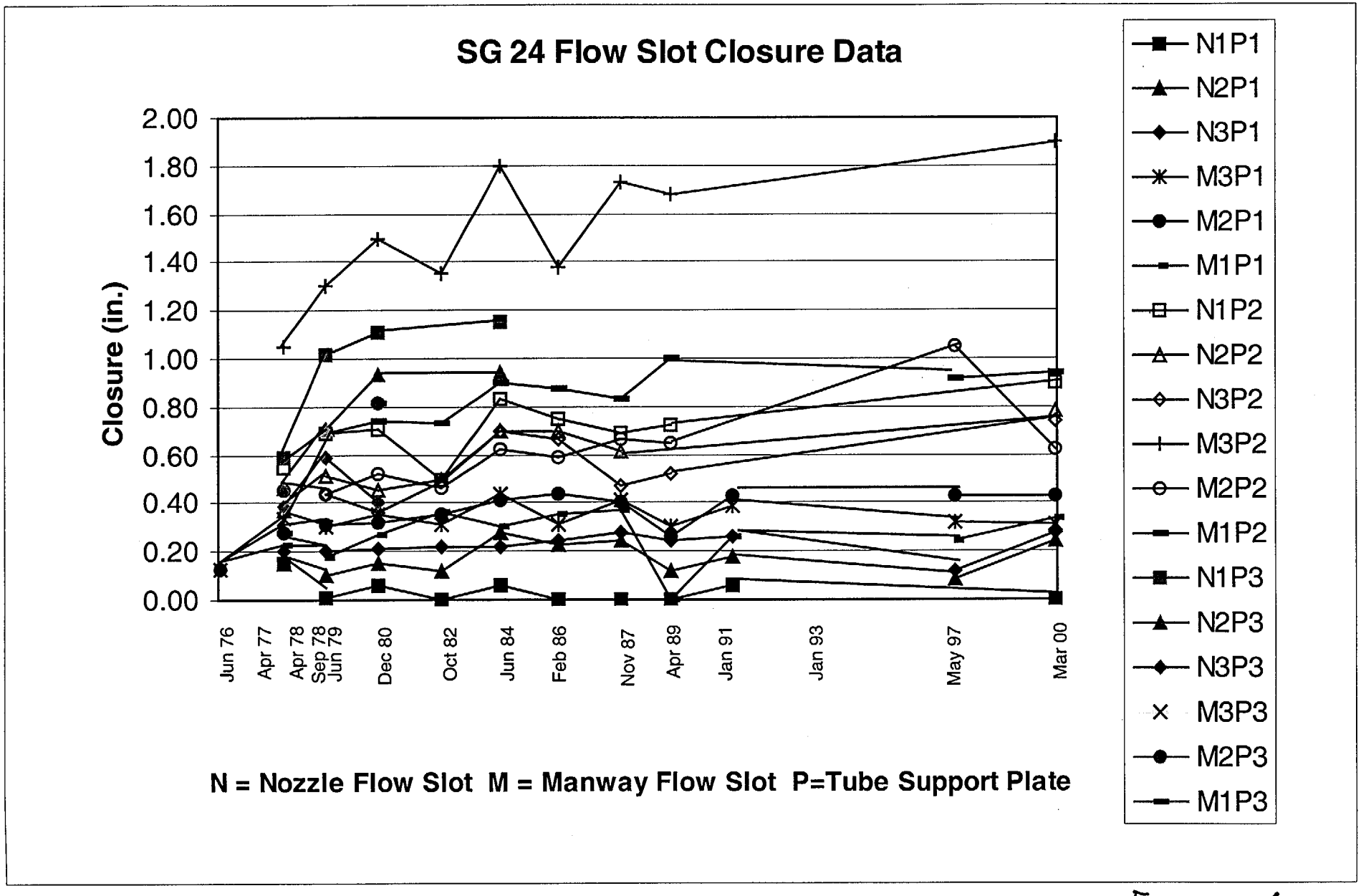
SG 24 Flow Slot Closure Data
Closure (in.)
2.00
1.80
1.60
1.40
1.20
1.00
0.80
0.60
0.40
0.20
0.00
Jun 76
Apr 77
Apr 78
Sep 78
Jun 79
Dec 80
Oct 82
Jun 84
Feb 86
Nov 87
Apr 89
Jan 91
Jan 93
May 97
Mar 00
N1P1
N2P1
N3P1
M3P1
M2P1
M1P1
N1P2
N2P2
N3P2
M3P2
M2P2
M1P2
N1P3
N2P3
N3P3
M3P3
M2P3
M1P3
N = Nozzle Flow Slot M = Manway Flow Slot P=Tube Support Plate

FIGURE 4

Figure 5 Flow Slot Ligament Cracking Map

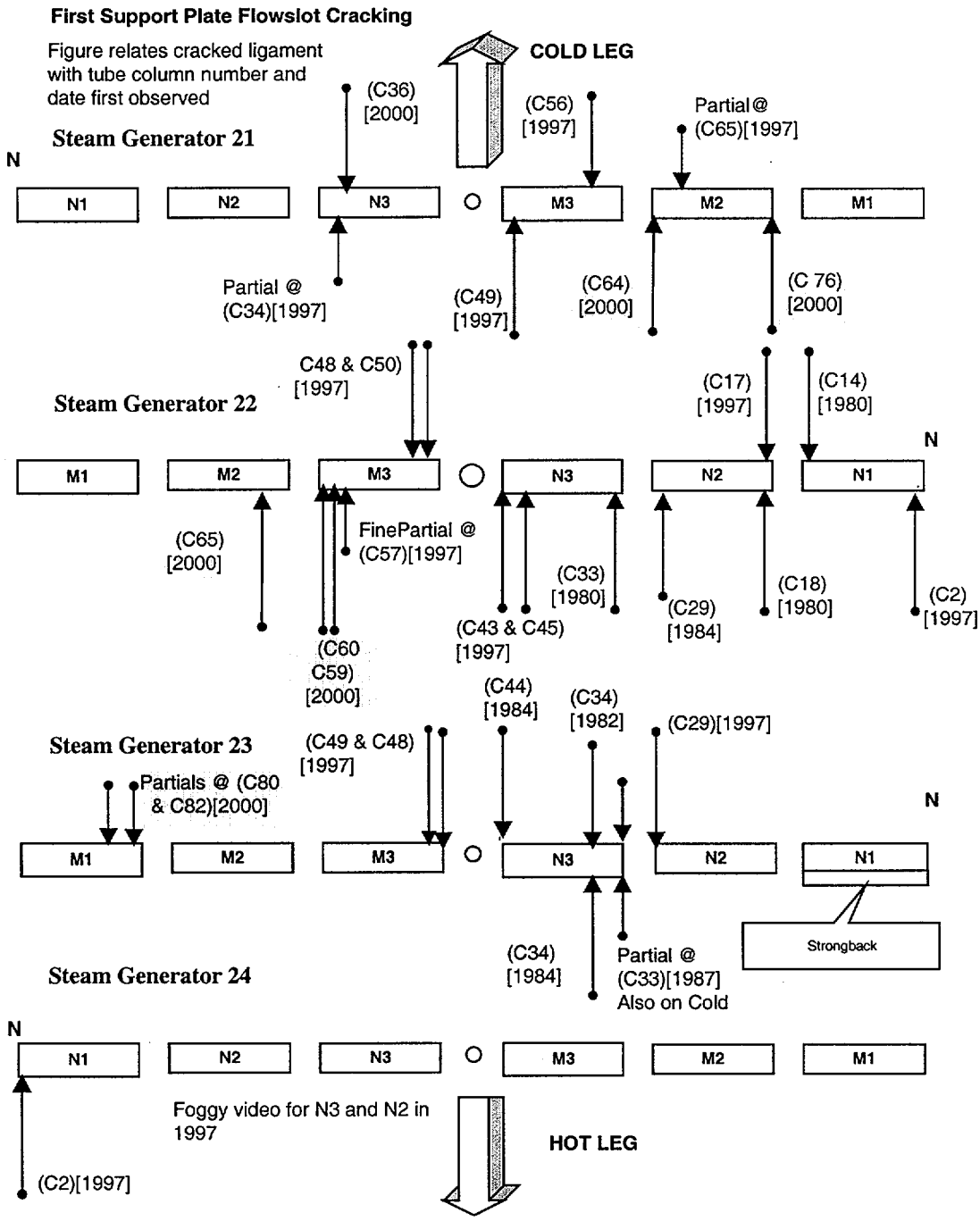

Figure 2 6 Flow Slot Ligament Cracking Map

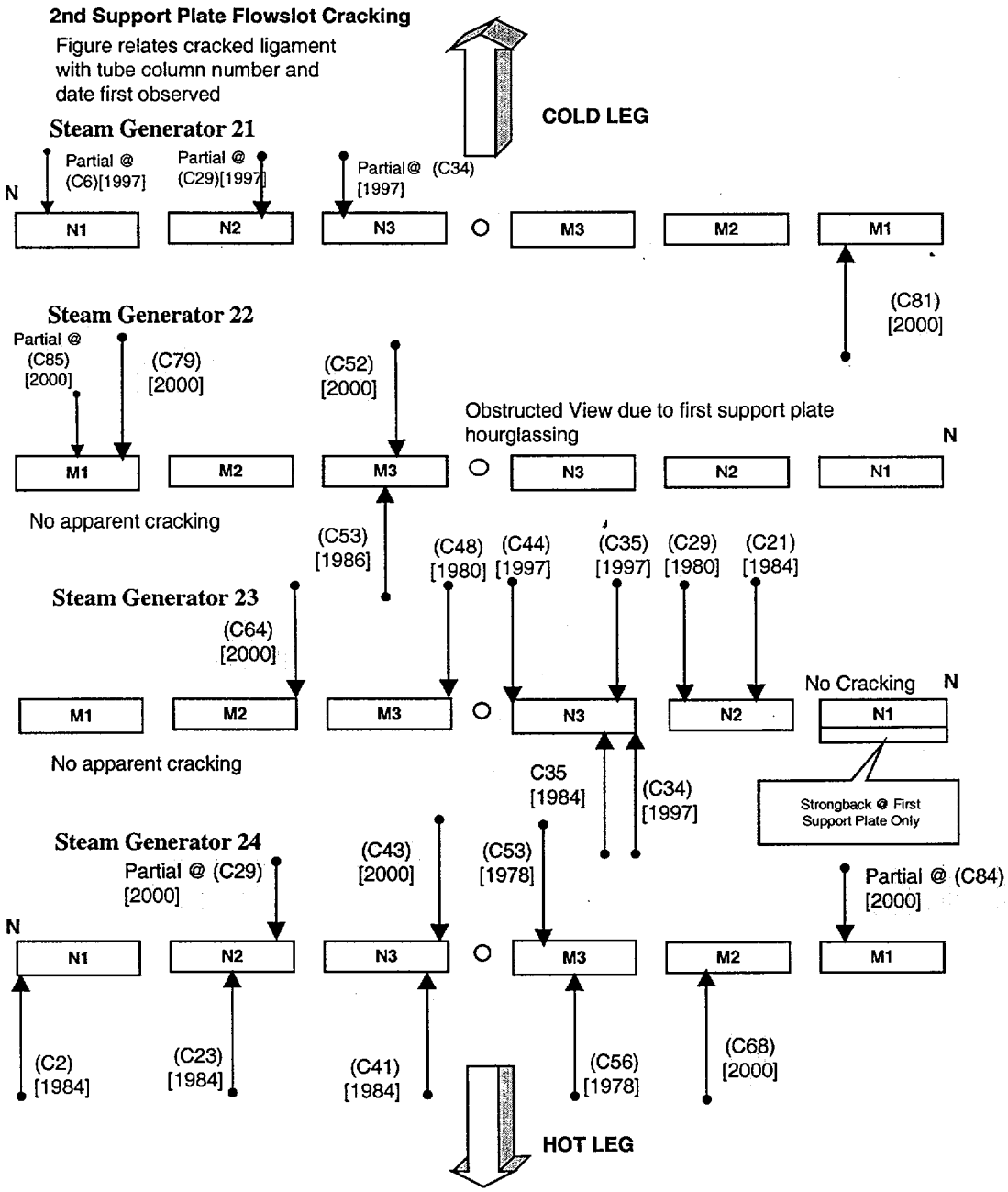

Figure 37 Flow Slot Ligament Cracking Map

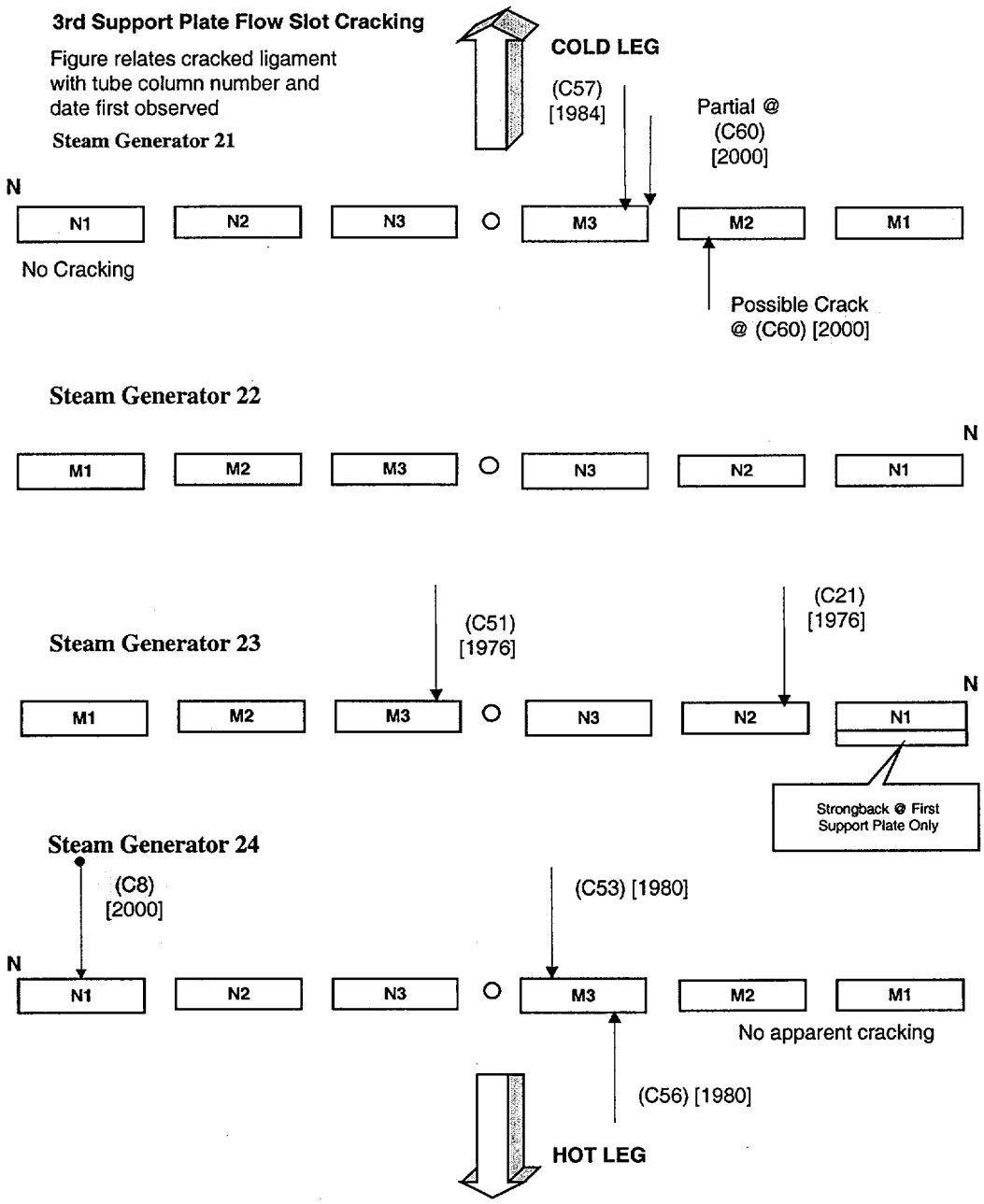

Figure A8 Flow Slot Ligament Cracking Map

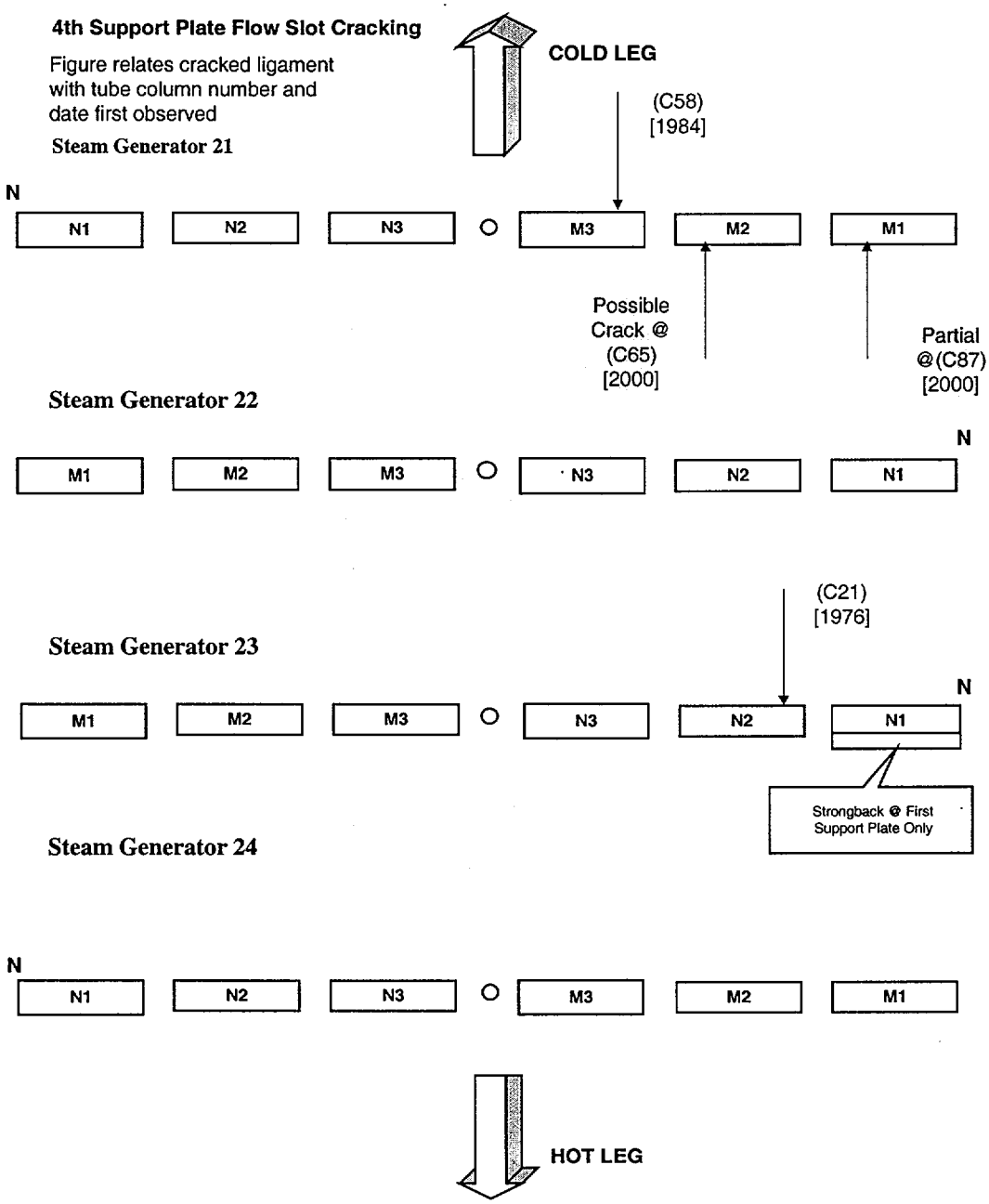

Figure 5 9 Flow Slot Ligament Cracking Map

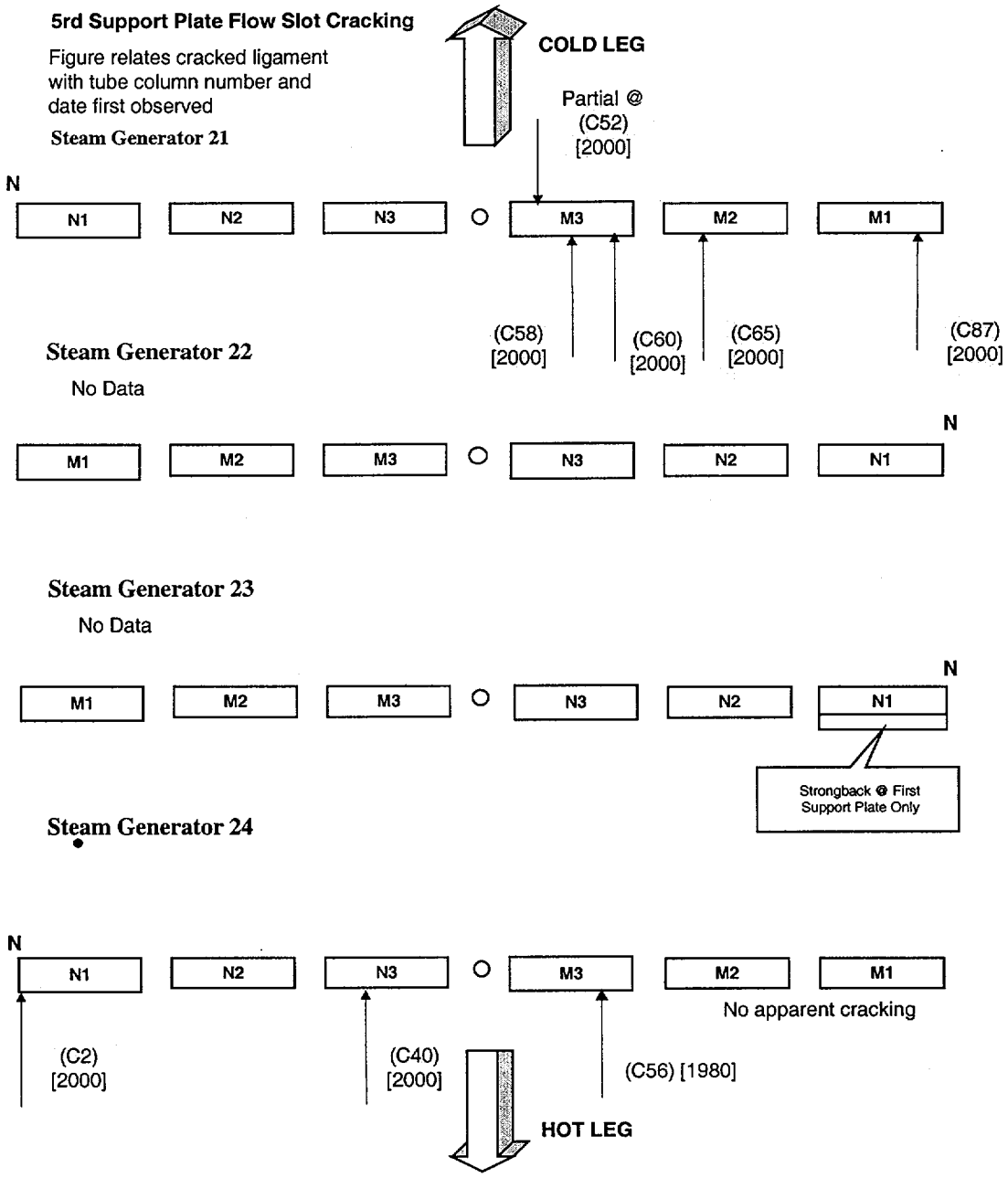

REFERENCE 2

QA RECORD
96245 - 4 - TR-01
File Index

STEAM GENERATOR TUBE SUPPORT PLATE CRACKING EVALUATION OF THE INDIAN POINT UNIT 2 STEAM GENERATORS

Technical Report No. 96245-TR-01
Revision 0

prepared for:

Consolidated Edison Company of New York, Inc.
Indian Point Unit 2

May, 1997

altran

Altran Corporation 200 High Street, Boston, MA 02110 (617) 330-1130 FAX: (617) 330-1055

altran

Report Record

Document No.: 96245-TR-01 Rev. No.: 0 Sheet No.: ii

Nuclear Safety Related Yes X No ___ Total No. of Sheets 57

TITLE: Steam Generator Tube Support Plate Cracking Evaluation of the Indian Point Unit 2 Steam Generators

CLIENT: Consolidated Edison **FACILITY:** Indian Point Unit 2

REV. DESCRIPTION: Revision 0: Original Issue

COMPUTER RUNS (identified on Computer File Index): Yes X N/A ___

Error reports evaluated by: R. Tomawski Date: 5/12/97

Impacted by error reports: No X Yes ___ (if yes, attach explanation)

Originator(s)	Date	Checker(s)	Date
Ronald J. Tomawski R. Tomawski	5/14/97	FOR R. Stuart	5-20-97

DESIGN VERIFICATION: (EOP 3.4) Required X Not Required* ___

* Justification ___

Performed by: T. Esselman T. Esselman Date: 5/20/97

Method of design verification:

X Design Review ___ Alternate Calculations (Attached) ___ Qualification Test (Data/Results Attd.)

Comments resolved by: ___ Date: ___

Design verifier concurrence: ___ Date: ___

APPROVED FOR RELEASE

PROJECT MANAGER: T. Esselman T. Esselman Date: 5/20/97

ENGINEERING MANAGER: M. Eissa Date: 5/20/97

altran

Computer File Index

Calc. No. 96245-TR-01 By: R. Tomawski Date: 05/12/97 Sheet iii

Rev. No. 0 Chk: R. Stuart Date: 05/12/97

PROGRAM NAME: ANSYS **VER. NO.:** 5.3

USERNAME: N/A (PC #176) **DIRECTORY:** N/A

KEYWORDS: /POST1, /PREP7, SOLID45

Run No.	Description	Input File Name	Output File Name	Date::Time
1.	Model A, Case 2, 9.3 psi	tubetest\test 2		1/31/97::8:27
2.	Model A, Case 3, 9.3 psi	miscfea\tubepl\test3		1/31/97::9:10
3.	Model B, 80°F Compression Load	miscfea\tubepl\cyl\contemp\nopress\notubea		2/3/97::2:30
4.	Model B, w/ Hotter Tubes	miscfea\tubepl\cyl\hottube\deltempl		1/31/97::10:33
5.	Model B, 10.3 psi, w/ preload	ANSYS\tubepl2\cyl\notubes\press\case2\sympln		4/21/97::12:23
6.	Model B, 10.3 psi,	ANSYS\tubepl2\cyl\notubes\press\case2\sympln\nodeltat		4/21/97::1:16

TABLE OF CONTENTS

COVER PAGE i
REPORT RECORD ii
COMPUTER FILE INDEX iii
TABLE OF CONTENTS iv
EXECUTIVE SUMMARY 1

1.0 INTRODUCTION 2

2.0 TUBE SUPPORT PLATE LOADS 7

3.0 FINITE ELEMENT MODELS 10

4.0 CONDITIONS IN WHICH A STAR COULD BECOME FREE 43

5.0 BEHAVIOR NEAR THE FLOW SLOT 44

6.0 CONCLUSIONS 55

7.0 REFERENCES 56

EXECUTIVE SUMMARY

The tube support plates in the steam generators at Indian Point Unit 2 have cracks in the ligaments between the tube holes and the flow holes. The cracking is caused by denting of the tubes in the steam generators. If all four ligaments near a tube hole are cracked (this encompassed segment is called a "star"), it is possible for a section of the tube support plate to become free and to not provide further support to the tube at specific locations. An analysis was performed to demonstrate that the tube support plates (TSPs) would retain their integrity following all plant normal and off-normal operating conditions. The tube and tube support plate geometry was evaluated to determine if any star sections could become free.

Finite element analyses were performed to show that the cracked ligaments in the TSPs in the IP2 steam generators are fully constrained and will not become free during a steam line break or feed line break combined with an earthquake. The steam line break or feed line break apply differential pressures across the TSP that cause the TSP to bend. This bending also applies loads at the cracked ligaments that "pinch" the star segments and tend to hold them in place. The loads trying to push a "star" section out of position due to the differential pressure across the TSP are far less than the loads that are restraining the star due to the plate bending. The analyses demonstrate that an interior star segment will not come free during the most severe accident condition. Parametric studies with up to two adjacent stars missing and with no initial compressive preload indicate that the conclusion will not change with differing initial assumptions.

Because of the cracks near the flow slot caused by hour-glassing, it is possible that a section of the TSP may come free at a location near the flow slots. A section coming free, though, is considered unlikely in that they have not come free during many years of normal operation with the hour-glassing conditions. If a segment did become free during normal operation or during an accident condition, the first row of tubes that is plugged will protect the active tubes. Thirteen Row 3 tubes near the location of an investigatory removal of a section of the TSP are recommended to be plugged to protect the active tubes in the instance that a section of the TSP becomes free. Ten other Row 2 tubes are recommended to be plugged near the ends of flow slots deformed by hourglassing.

1.0 INTRODUCTION

It has been recognized in prior examinations of the tube support plates in the steam generators at Indian Point Unit 2 (IP2) that cracks exist in the tube support plates [1]. The cracks were noted to be present in the ligaments between the tube holes and the flow holes. Examination of the tube support plates (TSPs) has confirmed the existence of the cracks near the flow slots. It is presumed that cracks also exist at other tube hole/flow hole ligaments away from the flow slots. If all four ligaments near a tube hole are cracked, it is possible for a section of the tube support plate to become free and release the support of the tube at specific locations. The section that would potentially become free is star-shaped and is referred to as a "star".

The steam generators at Indian Point Unit 2 are Model 44 steam generators manufactured by the Westinghouse Electric Corporation. An outline drawing of the lower shell and lower internals of the steam generator is provided in Figure 1-1. There are six tube support plates. The highest tube support plate (No. 6) is just below the U-Bends of the steam generator tubes.

The objective of the analysis described in this report was to demonstrate that the tube support plates (TSPs) would retain their integrity following all plant normal and off-normal operating conditions. The tube and tube support plate geometry was evaluated to determine if any star sections could become free. Finite element analyses were utilized to evaluate the constraint provided by the geometry.

The cracking that occurs at the ligaments has been previously evaluated [1]. An important feature of the ligament cracking is that the cracks have a rough surface morphology. Several photographs of separated sections that were removed from the IP2 steam generators are shown in Figures 1-2, 1-3, and 1-4. The crack has high surface roughness as the cracks did not propagate in a smooth straight line. In order for a star to become free, it has to be separated from the rest of the TSP at the location of the surface roughness at the crack.

The IP2 steam generators have experienced denting at many tube intersections. Denting is caused by the accumulation of corrosion product in the space between the tube and the TSP. A compressive load is induced in the TSP as a result of the denting. The denting at IP2 has advanced to the point where deformation of the flow slots has been experienced. This deformation is referred to as hour-glassing. The exact extent of denting in the tube bundle is not known. Various assumptions will be made to envelope the potential conditions that may exist in the tube bundle. The integrity of the TSP in the region near the flow slots will also be evaluated.

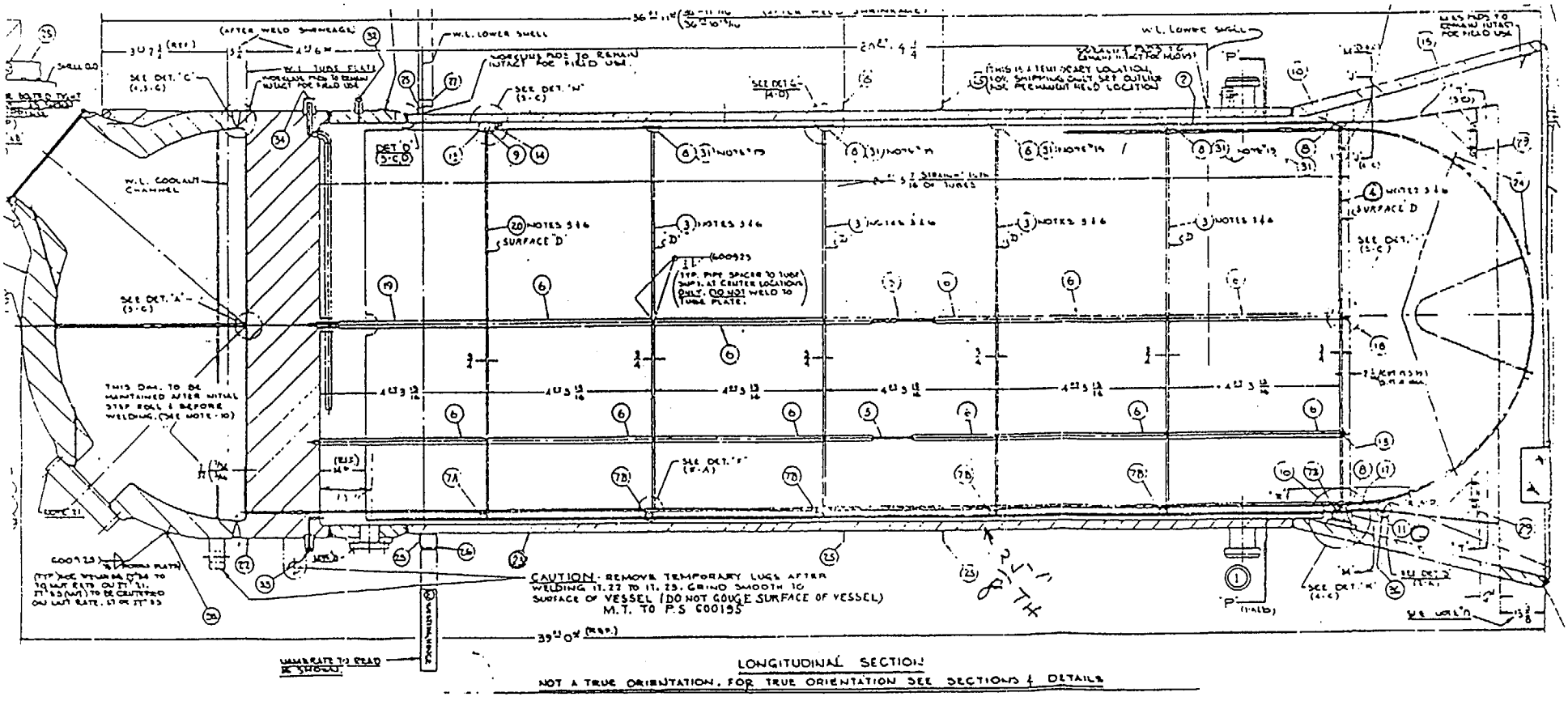

Figure 1-1
Outline Drawing of the Lower Shell & Lower Internals of the Model 44 Steam Generator

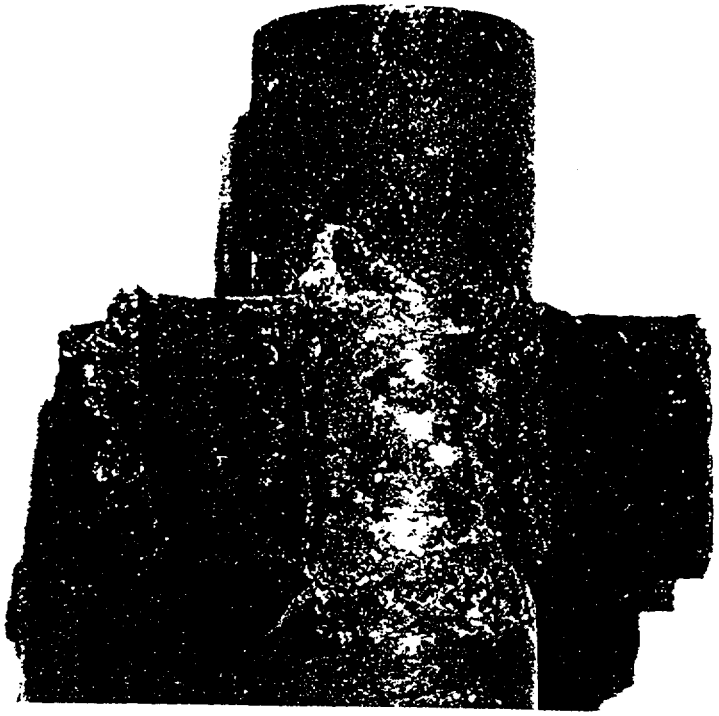

a

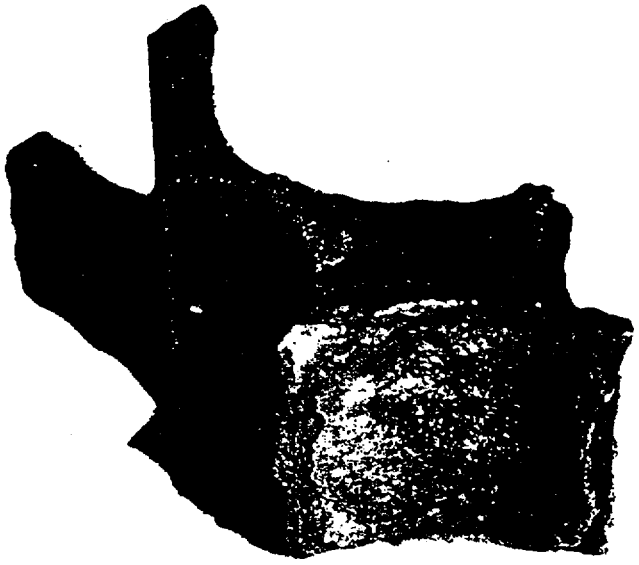

b

Figure 1-2
Tube and ligament sections removed from hot leg. a) Tube stub with one of the four surrounding "start shapes" missing. b) "Star shape" with one unfractured ligament between second-row tube hole and second-row flow hole.
Support Plate 1, Steam Generator 23, Indian Point 2

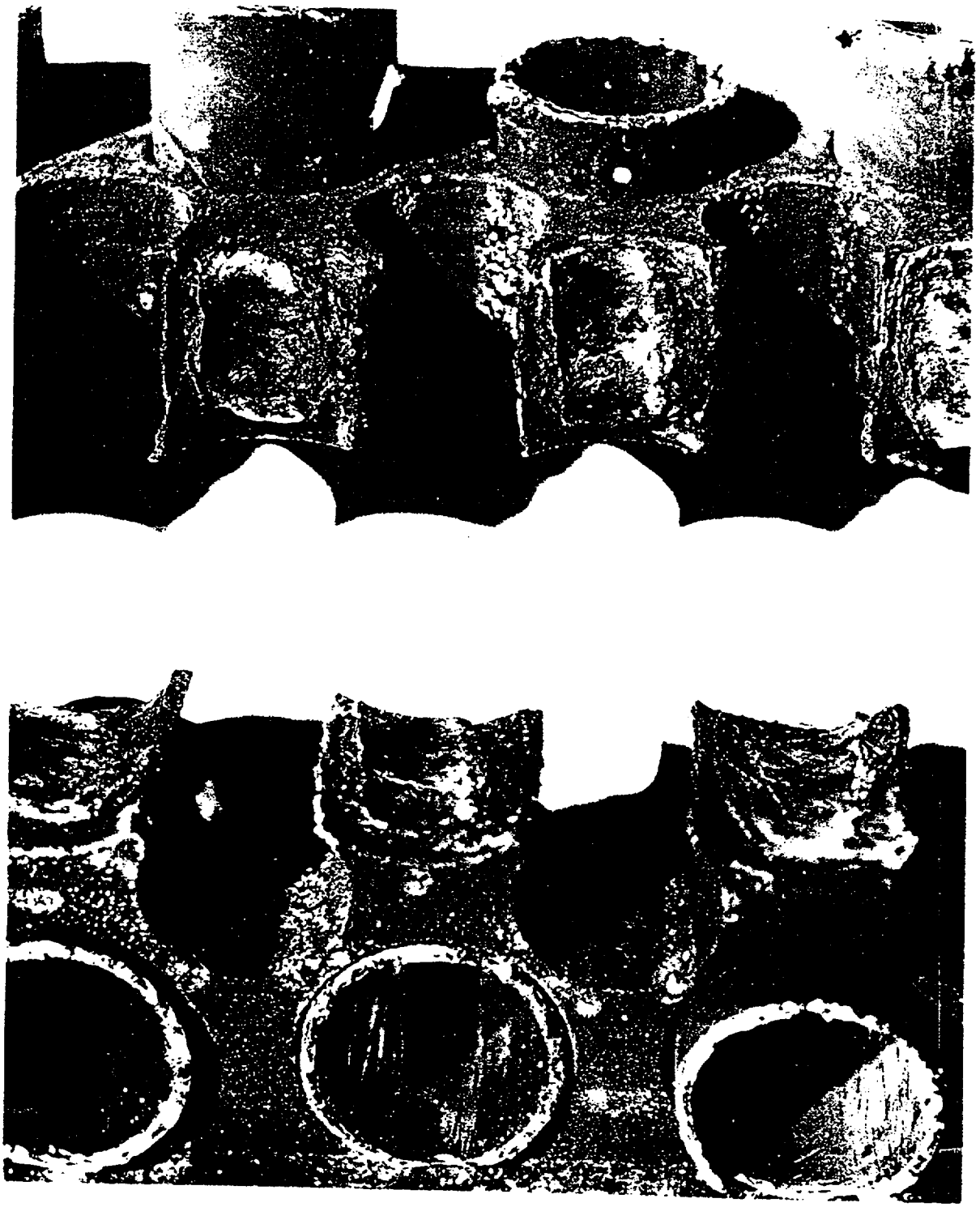

Figure 1-3
Central portion of the support plate sample.
Thinned and fractured ligaments between first-row flow holes and second-row tube holes.
Support Plate 1, Steam Generator 23, Indian Point 2

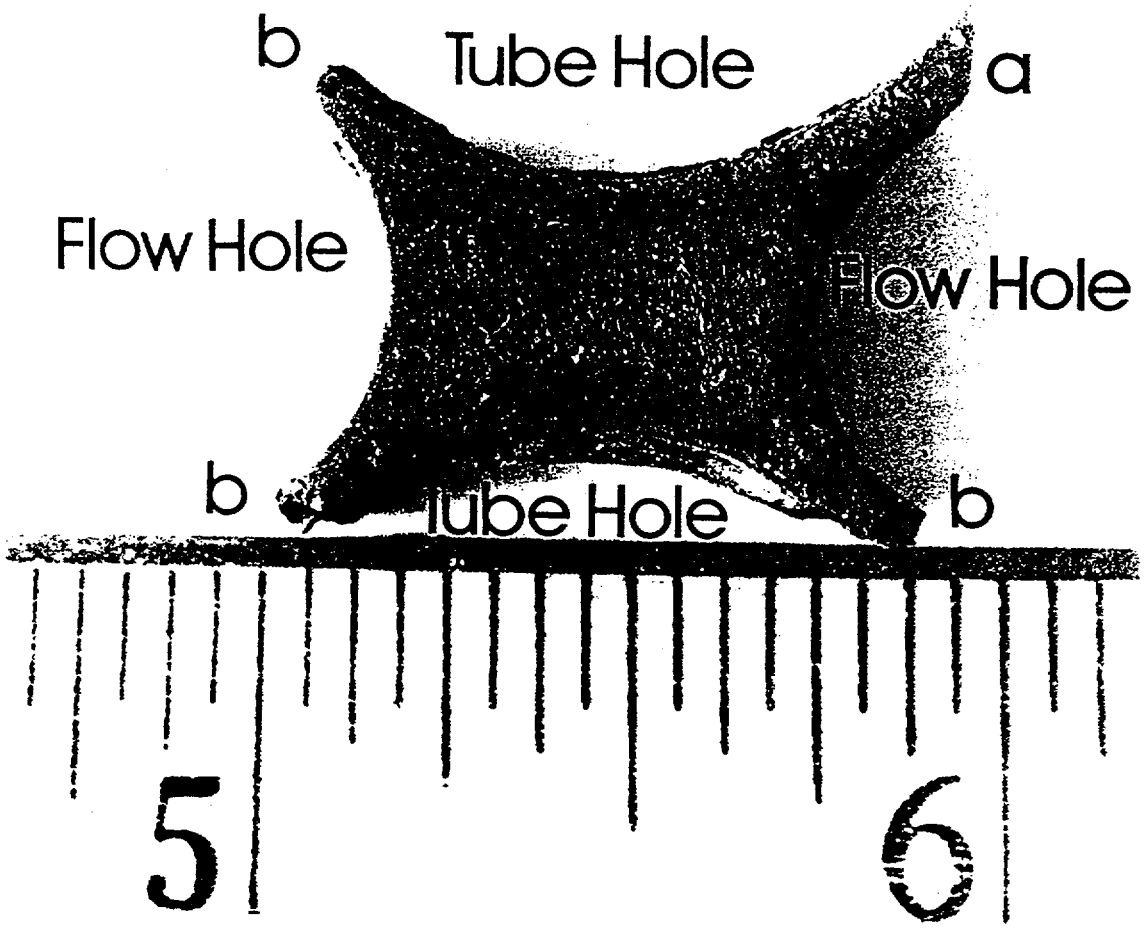

Figure 1-4
A "star shape" ligament section. a) Cut surface, b) Fracture surface.
Support Plate 1, Steam Generator 23, Indian Point 2

2.0 TUBE SUPPORT PLATE LOADS

The TSPs experience a variety of loads during normal operation of the plants and during off-normal operation. A tabulation of loading types was extracted from a draft Regulatory Guide entitled, "Steam Generator Tube Integrity" [2]. This list was carefully reviewed and was determined to be complete.

The loads are as follows:

- Pressure Differentials Associated with the Loss of Secondary System Pressure
- Impulse Loads Due to Rarefaction Waves During Blowdown due to LOCA
- Loads due to Fluid Friction from Mass Fluid Accelerations
- Loads Due to Centrifugal Force on U-Bends Caused by High Velocity Fluid Motion
- Loads Due to Dynamic Structural Response of the Steam Generator Components and Supports
- Seismic Loads
- Flow Induced Vibration During Blowdown from Main Steam Line Break (MSLB)

Loads that have the potential to dislodge a star in the TSP are loads that act out of the plane of the TSP. Out-of-plane loads will bend the TSP and increase the opportunity to release a star and also have the potential to apply a force to the star. All these loadings have been evaluated relative to the potential for applying loads to the TSPs that could lead to a star being dislodged.

The result of all these applied loads will be three different kinds of loads on the tube support plates. These will be:

1) in-plane loads

2) out-of-plane loads that are acting on the TSPs

3) loads inside the tubes that can affect the TSPs

Knowing the response that each of the applied loads will cause in the TSPs will allow the appropriate consideration of all the pertinent loads. A tabulation of the classes of applied loads and the TSP Response is provided in Table 2-1. As can be seen from the table, TSP out-of-plane loads that will result in bending of the TSP and the application of forces on an individual star are caused by steam line break, feed line break, and seismic. The other loads

will be insignificant or will only cause in-plane loads. In-plane loads are not considered significant relative to the dislodging of a star. As will be discussed, the TSP is in a constant state of compression due to denting of the tube intersections. The TSP is also highly constrained geometrically in the in-plane direction. An in-plane load will not have any significant effect on the loads on a star in a TSP.

The out-of-plane loads resulting from steam line break, feed line break, and seismic have been previously evaluated. The loads from this analysis were provided as a maximum out-of-plane differential pressure [3]. The applied out-of-plane load on a tube support plate for a combination of steam line break and vertical seismic loading is 10.3 psi. Of this amount, 9.3 psi is due to the steam line break. The differential pressure is applied to the bottom of the tube support plate so that the plate will deform in the upward direction. The differential pressure of 10.3 psi is applied to the most highly loaded tube support plate. The top TSP is the most highly loaded tube support plate since the total flow from the tube bundle passes through this plate as a result of a steam line or feed line break. The plates below the top TSP are more lowly loaded, since the flow that passes through them as a result of a steam line or feed line break is smaller. The plates near the bottom of the bundle have low load or reverse (downward) load during the steam line break. The feed line break differential pressure is less than 4 psi.

This load is conservative as it applies generically to all Westinghouse Model 44 and 51 steam generators, at all power levels, and in all seismic regions [3]. The loads at IP2 are expected to be smaller.

Table 2-1

Applied Load	TSP Response
• Pressure Differentials Associated with the Loss of Secondary System Pressure	• This will cause a stress across the tube wall and a "tightening" of the denting, but no overall bending load in the TSP.
• Impulse Loads Due to Rarefaction Waves During Blowdown due to LOCA	• A large in-the-plane-of-the-TSP load will hit the top TSP as the wave goes around the U-Bend. No significant bending loads in the TSP are expected.
• Loads due to Fluid Friction from Mass Fluid Accelerations due to MSLB or Feedline Break	• These loads will cause out-of-plane loads on the TSP due to either a MSLB or a Feedline Break.
• Loads Due to Centrifugal Force on U-Bends Caused by High Velocity Fluid Motion	• These loads will generally not affect the TSPs. Any loads in the TSPs will be in-plane.
• Loads Due to Dynamic Structural Response of the Steam Generator Components and Supports	• This will cause loads in the plane of the TSP and possibly some vibration of the tubes in the upper TSP location.
• Seismic Loads	• Vertical motion will load the tubes axially and will apply a vertical out-of-plane force on the TSP. The horizontal loads will load the TSPs in-plane.
• Flow Induced Vibration During Blowdown from Main Steam Line Break (MSLB)	• The vibration of the tubes will cause small in-plane loads at the TSP to tube interface.

3.0 FINITE ELEMENT MODELS

Two finite element models were prepared. One was a coarse model that was used to develop the overall response characteristic of the TSP and the other was a detailed model that was used to define the behavior of a cracked ligaments in a specific location in the TSP.

3.1 Model A - Full TSP Model

A three dimensional finite element model was constructed to represent a quarter symmetry section of a TSP. This model, referred to as Model A, is shown in Figure 3-1. Two elements are modeled through the thickness of the plate so that the displacements of regions with three nodes through the thickness could be used to define the external boundary conditions to be applied to a locally refined 3-D model that includes detail around the holes. The objective of Model A was to define displacement boundary conditions that can be applied to a more detailed model (Model B - shown in Figure 3-2).

The vertical boundary conditions of Model A include the TSP support columns (there is one support column in the center of the plate and four around the outer periphery) and a selected locked-tube constraint condition (to be described later). The horizontal boundary conditions include the symmetry boundary conditions at the lines of symmetry and the wedges at the outer TSP boundary.

An ANSYS line plot of the Model A geometry is shown in Figure 3-3. In this plot, the top surface keypoints at Z=0.0 (in X-Y plane) are numbered, and the locations of these keypoints are listed in Table 3-1. In-plane material properties and boundary conditions are identical to those used in a previous analysis of the TSP [4]. The out-of-plane modulus of elasticity is the normal material modulus of elasticity factored by the ratio of metal area over total TSP area. Figure 3-4 is an ANSYS element edge/material plot, where material 1 is shown as the solid outer material and material 2 represents the inner material for the plate region with holes. A listing of the ANSYS Model A material properties is located in Table 3-2.

Since the purpose of the analysis is to investigate the effect of various loads on a cracked "star" segment of the TSP, two different restraint conditions, based on different "locked tube patterns" were analyzed. For both restraint conditions, in-plane restraints are applied along symmetry planes to represent the symmetrical loading about those planes. The different restraint conditions were selected following a review of the tube inspection results at IP2 [6]. The case where no tubes are locked due to denting (referred to as Restraint Case 1) is unrealistic and was not considered in the analysis.

For the first dented restraint condition, selected nodes are restrained in the direction perpendicular to the TSP to represent the "locked tube pattern" for an actual TSP where approximately 20% of the outer tubes are locked. This condition is referred to as Restraint Case 2, and is shown in Figure 3-5. The tube inspection patterns showed

that the tubes near the flow slots and wedges were the most likely to be dented and this restraint case reflects this condition. The tubes in the inner tube bundle are presumed to be free and to provide no restraint to the TSP.

For the second dented restraint condition, selected nodes are restrained in the direction perpendicular to the TSP to represent the "locked tube pattern" for an actual TSP where approximately 80% of the outer tubes are locked. This condition is referred to as Restraint Case 3, and is shown in Figure 3-6.

Results of the analysis of the two Restraint Cases were compared in order to find a worst case location for local loads on a "star" segment.

A pressure load of 10.3 psi is applied to the lower (+Z direction) TSP face for each restraint case. Plots of the out-of-plane displacements for Restraint Case 2 and Restraint Case 3 are provided in Figures 3-7 and 3-8. Displacements into Restraint Case 3 are significantly less than those for Restraint Case 2. Plots of the stress intensities for Restraint Case 2 and Restraint Case 3 are provided in Figures 3-9 and 3-10. The plots in Figures 3-7 to 3-10 are shown for the steam line break case in which the differential pressure was 9.3 psi. As these models are linear, the stresses and displacements for the 10.3 psi steam line break plus seismic case are obtained by multiplying the results of the 9.3 psi case by a factor of 10.3 divided by 9.3.

The location on the TSP that would tend to open a cracked ligament is the location that has the highest tensile stress on the side opposite the applied pressure load. The worst case for bending occurs in "Restraint Case 2". Figure 3-11 is a stress plot of the Y-direction stress on the top side of the TSP. Figure 3-12 contains path plots of Y-direction stress and Z-direction displacements on the top side of the plate on the symmetry edge (Y-Z plane). From these plots, it can be seen that the maximum tensile bending stress on the unpressurized side occurs at the location of maximum positive out-of-plane (Z) displacement. A tube support plate section with cracked ligaments, if located at this point of highest stress, would be the most likely to come free. The displacements from this region of Model A are saved to be applied as edge boundaries on detailed Model B.

For the steam line break plus seismic differential pressure of 10.3 psi, the more severe restraint case is Restraint Case 2. The maximum out-of-plane displacement is 0.684" and the maximum stress intensity is 26,958 psi (Figure 3.9 values times 1.107). The region of maximum Z displacement for Restraint Case 2 is used to define the boundary displacement conditions of the detailed Model B.

3.2 Model B - Detailed Tube Hole/Flow Hole Model

A finite element model of a 5x4 tube hole array was constructed to represent a portion of the tube support plate. This model is shown in Figure 3-2. The outer edges of the model were dimensioned to match the node points of Model A. The central portion of Model B represents a cracked star pattern, bounded by gap elements at the crack locations that can only transmit compressive loads.

The elements at the outer model edges of Model B are restrained from in-plane (X or Y direction) movement. The outer edges of the lower plate face are also restrained in the out-of-plane (Z) direction, thus allowing for movement of the "star" in the out-of-plane direction.

The initial condition for Model B assumes that denting has occurred and that tubes have become locked as indicated for Restraint Case 2. This results in compressive preload stresses throughout the TSP. The existence of the preload is also evidenced by hourglassing that is present at the flow slots. The compressive loads and stresses were previously analyzed [4]. The compressive preload is induced in Model B by providing thermal growth in a restrained model. A thermal differential is selected that results in elastic membrane stresses at the star section ligaments of approximately the yield stress of 28,000 psi for the TSP material. To obtain this condition, a thermal differential of 80°F is applied. This induces a stress that is conservatively lower than calculated in Reference 4. This induced compressive stress is also insufficient to cause the hourglassing at the flow slots that is present in the steam generators. Stresses that go well beyond the compressive yield stress are more realistic. The stresses induced in this model are conservatively limited to approximately the yield stress. The stress results of this compressive preload condition are shown in Figure 3-13 for Model B and in Figure 3-14 for the inner star region of Model B. The compressive nodal forces on the "star" section are illustrated in Figure 3-14.

When the differential pressure displacements from Model A are applied to the TSP, local plate bending due to pressure induces tensile stress on the top side of the TSP. This tensile stress opens up the cracks at the ligaments. This opening up of the cracked locations creates a condition in which the star could become free. The magnitude of the forces restraining the movement of the star are calculated at the location of the cracked ligaments.

When the differential pressure forces are applied, the compressive bending stress on the bottom of the plate increases the compression on this side. The tensile force on the top of the plate unloads the initial compressive load and then opens the crack.

An ANSYS input listing of Model B for Restraint Case 2 (10.3 psi pressure plus locked tube preloading) is located in Table 3-3. The stress results of this condition are shown in Figure 3-15 for the inner star region. The compressive nodal forces on the "star" section are illustrated in Figure 3-15.

From the ANSYS results for the Restraint Case 2 condition, the total compressive preload force across a typical star cracked face is 1,590 pounds. The out-of-plane load acting on the "star" section due to a differential pressure of 10.3 psi is less than 3 pounds. With a coefficient of friction of 0.5, considered to be lower than that existing in the cracked ligaments, the in-plane load required to prevent "sliding" would be approximately 1.5 pounds. Therefore, in a flat preloaded section of the TSP, only 1.5 pounds of the 1,509 pounds of in-plane loading generated by a differential pressure of 10.3 psi would be required to prevent sliding of the "star" segment.

This analysis shows that it is not considered likely that a star section from a cracked TSP could become free even during the steam line break plus seismic loading case.

3.3 Star Segments Missing

The effects of the loss of a star segment is considered. A geometry plot of Model B with the center star segment removed is shown in Figure 3-16. The boundary displacements from Restraint Case 2 are applied to this model. The ANSYS analysis provided a compressive force of 2,922 lbs. across a star cracked face (identified by an arrow in Figure 3-16) near the removed star. This restraint force is greater than the force that results when there are no stars removed. This is caused by an increase in the compressive forces transmitted through a ligament near the missing star.

The effects of the removal of a second star segment was also considered. A geometry plot of Model B with the removal of two star segments around the center of the model is shown in Figure 3-17. The ANSYS analysis provided a compressive force across a star cracked face of 3,134 pounds. This again is larger than for a single or no star removed.

The inadvertent loss of individual stars does not compromise the integrity of the overall TSP.

3.4 Case Without Induced Compressive Stress

In order to assure that the presence of an initial compressive stress caused by denting is not controlling the behavior near a cracked star, a case was run with a zero compressive stress. A plot of the resulting stress intensities on the star segment is provided in Figure 3-18. This analysis resulted in a load across the face of 1,025 pounds. This is still is much greater than the force required to restrain the star. Even without the initial compressive stress that surely exists due to the denting, the stars caused by cracked ligaments would be restrained.

Table 3-1
Keypoint Locations

NO.	X,Y,Z LOCATION			THXY,THYZ,THZX ANGLES		
1	.0000000	.0000000	.0000000	.0000	.0000	.0000
2	.0000000	1.375000	.0000000	.0000	.0000	.0000
3	2.000000	1.375000	.0000000	.0000	.0000	.0000
4	2.000000	.0000000	.0000000	.0000	.0000	.0000
5	17.00000	.0000000	.0000000	.0000	.0000	.0000
6	17.00000	1.375000	.0000000	.0000	.0000	.0000
7	21.00000	1.375000	.0000000	.0000	.0000	.0000
8	21.00000	.0000000	.0000000	.0000	.0000	.0000
9	36.00000	.0000000	.0000000	.0000	.0000	.0000
10	36.00000	1.375000	.0000000	.0000	.0000	.0000
11	40.00000	1.375000	.0000000	.0000	.0000	.0000
12	40.00000	.0000000	.0000000	.0000	.0000	.0000
13	55.00000	.0000000	.0000000	.0000	.0000	.0000
14	55.00000	1.375000	.0000000	.0000	.0000	.0000
15	58.00000	.0000000	.0000000	.0000	.0000	.0000
16	57.98370	1.375000	.0000000	.0000	.0000	.0000
17	9.500000	1.375000	.0000000	.0000	.0000	.0000
18	28.50000	1.375000	.0000000	.0000	.0000	.0000
19	47.50000	1.375000	.0000000	.0000	.0000	.0000
20	.0000000	1.675000	.0000000	.0000	.0000	.0000

NO.	X,Y,Z LOCATION			THXY,THYZ,THZX ANGLES		
21	6.170000	1.675000	.0000000	.0000	.0000	.0000
22	12.34000	1.675000	.0000000	.0000	.0000	.0000
23	18.51000	1.675000	.0000000	.0000	.0000	.0000
24	24.68000	1.675000	.0000000	.0000	.0000	.0000
25	30.85000	1.675000	.0000000	.0000	.0000	.0000
26	37.02000	1.675000	.0000000	.0000	.0000	.0000
27	43.19000	1.675000	.0000000	.0000	.0000	.0000
28	49.36000	1.675000	.0000000	.0000	.0000	.0000
29	55.53000	1.675000	.0000000	.0000	.0000	.0000
30	.0000000	2.125000	.0000000	.0000	.0000	.0000
31	6.170000	2.125000	.0000000	.0000	.0000	.0000
32	12.34000	2.125000	.0000000	.0000	.0000	.0000
33	18.51000	2.125000	.0000000	.0000	.0000	.0000
34	24.68000	2.125000	.0000000	.0000	.0000	.0000
35	30.85000	2.125000	.0000000	.0000	.0000	.0000
36	37.02000	2.125000	.0000000	.0000	.0000	.0000
37	43.19000	2.125000	.0000000	.0000	.0000	.0000
38	49.36000	2.125000	.0000000	.0000	.0000	.0000
39	55.53000	2.125000	.0000000	.0000	.0000	.0000
40	.0000000	8.295000	.0000000	.0000	.0000	.0000

Table 3-1 (Cont.)
Keypoint Locations

NO.	X,Y,Z LOCATION			THXY,THYZ,THZX ANGLES		
41	6.170000	8.295000	.0000000	.0000	.0000	.0000
42	12.34000	8.295000	.0000000	.0000	.0000	.0000
43	18.51000	8.295000	.0000000	.0000	.0000	.0000
44	24.68000	8.295000	.0000000	.0000	.0000	.0000
45	30.85000	8.295000	.0000000	.0000	.0000	.0000
46	37.02000	8.295000	.0000000	.0000	.0000	.0000
47	43.19000	8.295000	.0000000	.0000	.0000	.0000
48	49.36000	8.295000	.0000000	.0000	.0000	.0000
49	55.53000	8.295000	.0000000	.0000	.0000	.0000
50	56.73256	12.05888	.0000000	.0000	.0000	.0000
51	55.16128	17.92299	.0000000	.0000	.0000	.0000
52	43.10240	38.80958	.0000000	.0000	.0000	.0000
53	41.01219	41.01219	.0000000	.0000	.0000	.0000
54	38.80958	43.10240	.0000000	.0000	.0000	.0000
55	17.92299	55.16128	.0000000	.0000	.0000	.0000
56	12.05888	56.73256	.0000000	.0000	.0000	.0000
57	.3551358E-14	58.00000	.0000000	.0000	.0000	.0000
58	55.51278	1.375000	.0000000	.0000	.0000	.0000
59	57.39073	8.384743	.0000000	.0000	.0000	.0000
60	.0000000	14.46500	.0000000	.0000	.0000	.0000

NO.	X,Y,Z LOCATION			THXY,THYZ,THZX ANGLES		
61	6.170000	14.46500	.0000000	.0000	.0000	.0000
62	12.34000	14.46500	.0000000	.0000	.0000	.0000
63	18.51000	14.46500	.0000000	.0000	.0000	.0000
64	24.68000	14.46500	.0000000	.0000	.0000	.0000
65	30.85000	14.46500	.0000000	.0000	.0000	.0000
66	37.02000	14.46500	.0000000	.0000	.0000	.0000
67	43.19000	14.46500	.0000000	.0000	.0000	.0000
68	49.36000	14.46500	.0000000	.0000	.0000	.0000
69	.0000000	20.63500	.0000000	.0000	.0000	.0000
70	6.170000	20.63500	.0000000	.0000	.0000	.0000
71	12.34000	20.63500	.0000000	.0000	.0000	.0000
72	18.51000	20.63500	.0000000	.0000	.0000	.0000
73	24.68000	20.63500	.0000000	.0000	.0000	.0000
74	30.85000	20.63500	.0000000	.0000	.0000	.0000
75	37.02000	20.63500	.0000000	.0000	.0000	.0000
76	43.19000	20.63500	.0000000	.0000	.0000	.0000
77	49.36000	20.63500	.0000000	.0000	.0000	.0000
78	.0000000	26.80500	.0000000	.0000	.0000	.0000
79	6.170000	26.80500	.0000000	.0000	.0000	.0000
80	12.34000	26.80500	.0000000	.0000	.0000	.0000

Table 3-1 (Cont.)
Keypoint Locations

NO.	X,Y,Z LOCATION			THXY,THYZ,THZX ANGLES		
81	18.51000	26.80500	.0000000	.0000	.0000	.0000
82	24.68000	26.80500	.0000000	.0000	.0000	.0000
83	30.85000	26.80500	.0000000	.0000	.0000	.0000
84	37.02000	26.80500	.0000000	.0000	.0000	.0000
85	43.19000	26.80500	.0000000	.0000	.0000	.0000
86	49.36000	26.80500	.0000000	.0000	.0000	.0000
87	.0000000	32.97500	.0000000	.0000	.0000	.0000
88	6.170000	32.97500	.0000000	.0000	.0000	.0000
89	12.34000	32.97500	.0000000	.0000	.0000	.0000
90	18.51000	32.97500	.0000000	.0000	.0000	.0000
91	24.68000	32.97500	.0000000	.0000	.0000	.0000
92	30.85000	32.97500	.0000000	.0000	.0000	.0000
93	37.02000	32.97500	.0000000	.0000	.0000	.0000
94	43.19000	32.97500	.0000000	.0000	.0000	.0000
95	.0000000	39.14500	.0000000	.0000	.0000	.0000
96	6.170000	39.14500	.0000000	.0000	.0000	.0000
97	12.34000	39.14500	.0000000	.0000	.0000	.0000
98	18.51000	39.14500	.0000000	.0000	.0000	.0000
99	24.68000	39.14500	.0000000	.0000	.0000	.0000
100	30.85000	39.14500	.0000000	.0000	.0000	.0000

NO.	X,Y,Z LOCATION			THXY,THYZ,THZX ANGLES		
101	37.02000	39.14500	.0000000	.0000	.0000	.0000
102	.0000000	45.31500	.0000000	.0000	.0000	.0000
103	6.170000	45.31500	.0000000	.0000	.0000	.0000
104	12.34000	45.31500	.0000000	.0000	.0000	.0000
105	18.51000	45.31500	.0000000	.0000	.0000	.0000
106	24.68000	45.31500	.0000000	.0000	.0000	.0000
107	30.85000	45.31500	.0000000	.0000	.0000	.0000
108	.0000000	51.48500	.0000000	.0000	.0000	.0000
109	6.170000	51.48500	.0000000	.0000	.0000	.0000
110	12.34000	51.48500	.0000000	.0000	.0000	.0000
111	18.51000	51.48500	.0000000	.0000	.0000	.0000
112	.0000000	55.80400	.0000000	.0000	.0000	.0000
113	6.170000	55.80400	.0000000	.0000	.0000	.0000
114	55.75441	11.85097	.0000000	.0000	.0000	.0000
115	54.21022	17.61397	.0000000	.0000	.0000	.0000
116	42.35926	38.14044	.0000000	.0000	.0000	.0000
117	40.30509	40.30509	.0000000	.0000	.0000	.0000
118	17.61397	54.21022	.0000000	.0000	.0000	.0000
119	11.85097	55.75441	.0000000	.0000	.0000	.0000
120	.3490128E-14	57.00000	.0000000	.0000	.0000	.0000

NO.	X,Y,Z LOCATION			THXY,THYZ,THZX ANGLES		
121	38.14044	42.35926	.0000000	.0000	.0000	.0000

Table 3-2
ANSYS Model A Material Properties

```
EVALUATE MATERIAL PROPERTIES FOR MATERIALS      1 TO      2 IN INCREMENTS OF      1

MATERIAL NUMBER =      1 EVALUATED AT TEMPERATURE OF   .00000
 EX   =   .29000E+08
 NUXY =   .30000
 ALPX =   .80000E-05
 DENS =   .28300

MATERIAL NUMBER =      2 EVALUATED AT TEMPERATURE OF   .00000
 EX   =   .21300E+07
 EY   =   .21300E+07
 EZ   =   .13000E+08
 NUXY =   .67100
 NUYZ =   .30000
 NUXZ =   .30000
 ALPX =   .80000E-05
 DENS =   .13000
```

Table 3-3
ANSYS input listing of Model B for Restraint Case 2

```
/batch,list
/prep7
/title,P = 10.3 psi, Case 2 at Symm. Plane & 80 Deg. Preload
r1=.6875/2
r2=.874/2
r3=.774/2
l1=1.234
l2=1.234
r4=(l1**2+l2**2)**0.5/2-r1
t=.75
csys,0
local,11,1,l1/2,l2/2
local,12,0,l1/2,l2/2
csys,11
n,1,r3
ngen,16,1,1,,,,22.5
ngen,2,16,1,16,1,r2-r3
csys,12
n,33,l1/2
n,34,l1/2,l2/2-r1
n,36,l1/2-r1,l2/2
n,38,-(l1/2-r1),l2/2
fill
n,40,-l1/2,l2/2-r1
n,42,-l1/2,-(l2/2-r1)
fill
n,44,-(l1/2-r1),-l2/2
n,46,l1/2-r1,-l2/2
fill
n,48,l1/2,-(l2/2-r1)
csys,11
n,35,r4,45
n,39,r4,135
n,43,r4,225
n,47,r4,315
csys,12
ngen,5,50,1,48,1,,,t/4

et,1,45   !tube
et,2,45   !plate
ex,1,29.2e6  !tube
ex,2,25.7e6  !plate
nuxy,1,0.3   !tube
nuxy,2,0.3   !plate
alpx,1,8e-6  !tube
alpx,2,8e-6  !plate

type,1
mat,1
e,1,17,18,2,51,67,68,52
egen,15,1,-1
e,16,32,17,1,66,82,67,51
egen,4,50,-16
type,2
mat,2
```

Table 3-3 (Cont.)
ANSYS input listing of Model B for Restraint Case 2

```
e,17,33,34,18,67,83,84,68
egen,15,1,-1
e,32,48,33,17,82,98,83,67
egen,4,50,-16

c*** generate additional blocks
csys,0
ngen,5,250,1,248,1,l1
ngen,4,2000,1,1248,1,,l2

egen,5,250,-128
egen,4,2000,-640

nummrg,node

c*** add interface elements
edele,899,947,16
edele,902,950,16
edele,963,1011,16
edele,966,1014,16
edele,1547,1595,16
edele,1550,1598,16
edele,1611,1659,16
edele,1614,1662,16

local,14,1,2.5*l1,2*l2,,-45
csys,14
ngen,5,10000,2503,2703,50,-.0001
ngen,5,10000,2507,2707,50,-.0001
ngen,5,10000,2519,2719,50,-.0001
ngen,5,10000,2523,2723,50,-.0001
ngen,5,10000,2535,2735,50,-.0001
ngen,5,10000,2539,2739,50,-.0001
ngen,5,10000,4511,4711,50,-.0001
ngen,5,10000,4515,4715,50,-.0001
ngen,5,10000,4527,4727,50,-.0001
ngen,5,10000,4531,4731,50,-.0001
ngen,5,10000,4543,4743,50,-.0001
ngen,5,10000,4547,4747,50,-.0001

csys,0
type,1
mat,1
en,899,12503,12519,2520,2504,12553,12569,2570,2554
en,902,2506,2522,12523,12507,2556,2572,12573,12557
en,1547,14511,14527,4528,4512,14561,14577,4578,4562
en,1550,4514,4530,14531,14515,4564,4580,14581,14565
engen,16,4,50,899,902,3
engen,16,4,50,1547,1550,3
type,2
mat,2
en,963,12519,12535,2536,2520,12569,12585,2586,2570
en,966,2522,2538,12539,12523,2572,2588,12589,12573
en,1611,14527,14543,2538,4528,14577,14593,2588,4578
en,1614,4530,2536,14547,14531,4580,2586,14597,14581
```

Table 3-3 (Cont.)
ANSYS input listing of Model B for Restraint Case 2

```
engen,16,4,50,963,966,3
engen,16,4,50,1611,1614,3

c*** interface elements

et,3,52
mu,3,.5
r,3,10e6,0,1,10e6
type,3
real,3
mat,3
e,2503,12503
e,2507,12507
e,2519,12519
e,2523,12523
e,2535,12535
e,2539,12539
e,4511,14511
e,4515,14515
e,4527,14527
e,4531,14531
e,4543,14543
e,4547,14547
egen,5,50,-12

c*** z direction boundary elements; spring & interface
csys,0
ngen,2,50000,2537,,,,,-1
d,52537,all
et,4,52,,,,1  !gap determined from node locations
mu,4,.5
r,4,10e6,0,3,10e6  !gap initially open
type,4
real,4
mat,4
e,2537,52537

et,5,14,,3,
r,5,.005
type,5
real,5
e,2537,52537
!
! ************** delete tubes & related gap elements ***
!
esel,s,type,,1
nsle
edele,all
ndele,all
allsel
! ************** compress node numbering ***************
edele,2561,2615,6
edele,2562,2616,6
nsle,s
nsel,inve
```

Table 3-3 (Cont.)
ANSYS input listing of Model B for Restraint Case 2

```
ndele,all
allsel
numcmp,node
allsel
!
finish
/solu
csys,0
!
!
! **** Displacements from 9.3 psi case 2 plate model **
!
! ******** UY Displacements ****************
!
D,  2340,UY,  .73818E-03
D,  2207,UY,  .62054E-03
D,  1546,UY,  .13842E-03
D,  2211,UY,  .41742E-03
D,  2061,UY,  .28101E-03
D,  2726,UY,  .83834E-03
D,  2730,UY,  .10608E-02
D,  2600,UY,  .95667E-03
D,  2470,UY,  .84973E-03
D,  2236,UY, -.73791E-03
D,  2091,UY, -.62027E-03
D,  1430,UY, -.13835E-03
D,  2095,UY, -.41722E-03
D,  2288,UY,  .13365E-06
D,  2149,UY,  .13385E-06
D,  1488,UY,  .33487E-07
D,  2153,UY,  .10045E-06
D,  1957,UY, -.28095E-03
D,  2622,UY, -.83814E-03
D,  2626,UY, -.10605E-02
D,  2496,UY, -.95640E-03
D,  2366,UY, -.84946E-03
D,  2009,UY,  .32796E-07
D,  2674,UY,  .98551E-07
D,  2678,UY,  .13211E-06
D,  2548,UY,  .13287E-06
D,  2418,UY,  .13336E-06
!
! ******** UX Displacements ****************
!
D,  2340,UX,  -.20430E-02
D,  2207,UX,  -.42868E-02
D,  1546,UX,  -.55143E-02
D,  2211,UX,  -.54508E-02
D,  2061,UX,   .54260E-02
D,  2726,UX,   .54790E-02
D,  2730,UX,   .45118E-02
D,  2600,UX,   .23978E-02
D,  2470,UX,   .19922E-03
D,  2236,UX,   .20438E-02
D,  2091,UX,   .42874E-02
```

Table 3-3 (Cont.)
ANSYS input listing of Model B for Restraint Case 2

```
D,  1430,UX,  .55148E-02
D,  2095,UX,  .54513E-02
D,  2288,UX,  .38827E-06
D,  2149,UX,  .27977E-06
D,  1488,UX,  .22485E-06
D,  2153,UX,  .22518E-06
D,  1957,UX, -.54244E-02
D,  2622,UX, -.54775E-02
D,  2626,UX, -.45104E-02
D,  2496,UX, -.23966E-02
D,  2366,UX, -.19823E-03
D,  2009,UX,  .76912E-06
D,  2674,UX,  .76870E-06
D,  2678,UX,  .71392E-06
D,  2548,UX,  .60526E-06
D,  2418,UX,  .49674E-06
!
! ******** UZ Displacements ****************
!
D,  2340,UZ,  .61221
D,  2207,UZ,  .60174
D,  1546,UZ,  .59546
D,  2211,UZ,  .59454
D,  2061,UZ,  .59472
D,  2726,UZ,  .59287
D,  2730,UZ,  .59954
D,  2600,UZ,  .61096
D,  2470,UZ,  .61525
D,  2236,UZ,  .61221
D,  2091,UZ,  .60174
D,  1430,UZ,  .59546
D,  2095,UZ,  .59455
D,  2288,UZ,  .61227
D,  2149,UZ,  .60180
D,  1488,UZ,  .59551
D,  2153,UZ,  .59460
D,  1957,UZ,  .59472
D,  2622,UZ,  .59287
D,  2626,UZ,  .59954
D,  2496,UZ,  .61096
D,  2366,UZ,  .61526
D,  2009,UZ,  .59477
D,  2674,UZ,  .59292
D,  2678,UZ,  .59960
D,  2548,UZ,  .61102
D,  2418,UZ,  .61532
!
! ******** UY Displacements ****************
!
D,   302,UY, -.73818E-03
D,   157,UY, -.62054E-03
D,   881,UY, -.13842E-03
D,   153,UY, -.41742E-03
D,  1396,UY, -.28101E-03
D,   728,UY, -.83834E-03
```

Table 3-3 (Cont.)
ANSYS input listing of Model B for Restraint Case 2

```
D,   737,UY, -.10608E-02
D,   592,UY, -.95667E-03
D,   447,UY, -.84973E-03
D,   186,UY,  .73791E-03
D,    29,UY,  .62027E-03
D,   765,UY,  .13835E-03
D,    25,UY,  .41722E-03
D,   244,UY, -.13365E-06
D,    93,UY, -.13385E-06
D,   823,UY, -.33487E-07
D,    89,UY, -.10045E-06
D,  1292,UY,  .28095E-03
D,   612,UY,  .83814E-03
D,   621,UY,  .10605E-02
D,   476,UY,  .95640E-03
D,   331,UY,  .84946E-03
D,  1344,UY, -.32796E-07
D,   670,UY, -.98551E-07
D,   679,UY, -.13211E-06
D,   534,UY, -.13287E-06
D,   389,UY, -.13336E-06
!
! ******** UX Displacements ****************
!
D,   302,UX,  -.20430E-02
D,   157,UX,  -.42868E-02
D,   881,UX,  -.55143E-02
D,   153,UX,  -.54508E-02
D,  1396,UX,   .54260E-02
D,   728,UX,   .54790E-02
D,   737,UX,   .45118E-02
D,   592,UX,   .23978E-02
D,   447,UX,   .19922E-03
D,   186,UX,   .20438E-02
D,    29,UX,   .42874E-02
D,   765,UX,   .55148E-02
D,    25,UX,   .54513E-02
D,   244,UX,   .38827E-06
D,    93,UX,   .27977E-06
D,   823,UX,   .22485E-06
D,    89,UX,   .22518E-06
D,  1292,UX,  -.54244E-02
D,   612,UX,  -.54775E-02
D,   621,UX,  -.45104E-02
D,   476,UX,  -.23966E-02
D,   331,UX,  -.19823E-03
D,  1344,UX,   .76912E-06
D,   670,UX,   .76870E-06
D,   679,UX,   .71392E-06
D,   534,UX,   .60526E-06
D,   389,UX,   .49674E-06
!
! ******** UZ Displacements ****************
!
D,   302,UZ,   .61221
```

Table 3-3 (Cont.)
ANSYS input listing of Model B for Restraint Case 2

```
D,   157,UZ,   .60174
D,   881,UZ,   .59546
D,   153,UZ,   .59454
D,  1396,UZ,   .59472
D,   728,UZ,   .59287
D,   737,UZ,   .59954
D,   592,UZ,   .61096
D,   447,UZ,   .61525
D,   186,UZ,   .61221
D,    29,UZ,   .60174
D,   765,UZ,   .59546
D,    25,UZ,   .59455
D,   244,UZ,   .61227
D,    93,UZ,   .60180
D,   823,UZ,   .59551
D,    89,UZ,   .59460
D,  1292,UZ,   .59472
D,   612,UZ,   .59287
D,   621,UZ,   .59954
D,   476,UZ,   .61096
D,   331,UZ,   .61526
D,  1344,UZ,   .59477
D,   670,UZ,   .59292
D,   679,UZ,   .59960
D,   534,UZ,   .61102
D,   389,UZ,   .61532
!
! ***** apply factor for 10.3 psi displacements ****
!
dofsel,all
dscale,10.3/9.3
!
! *************** apply pressure *******
!
nsel,s,loc,z,0.
sf,all,pres,10.3
nsel,all
!
tref,100
tunif,180
solve
save
finish
/exit,all
```

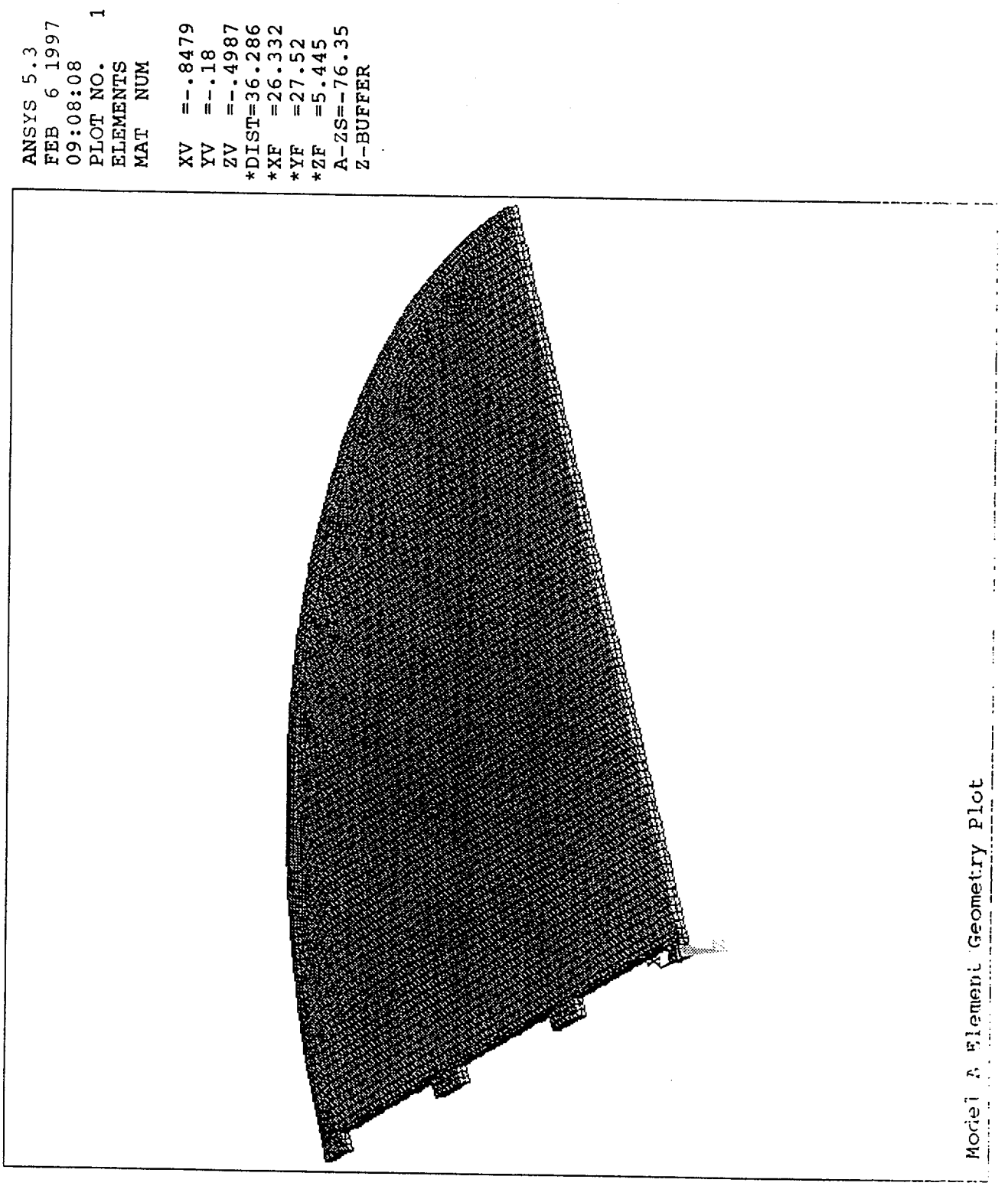

Figure 3-1
Model A - Three dimensional finite element model representing a quarter symmetry section of a TSP

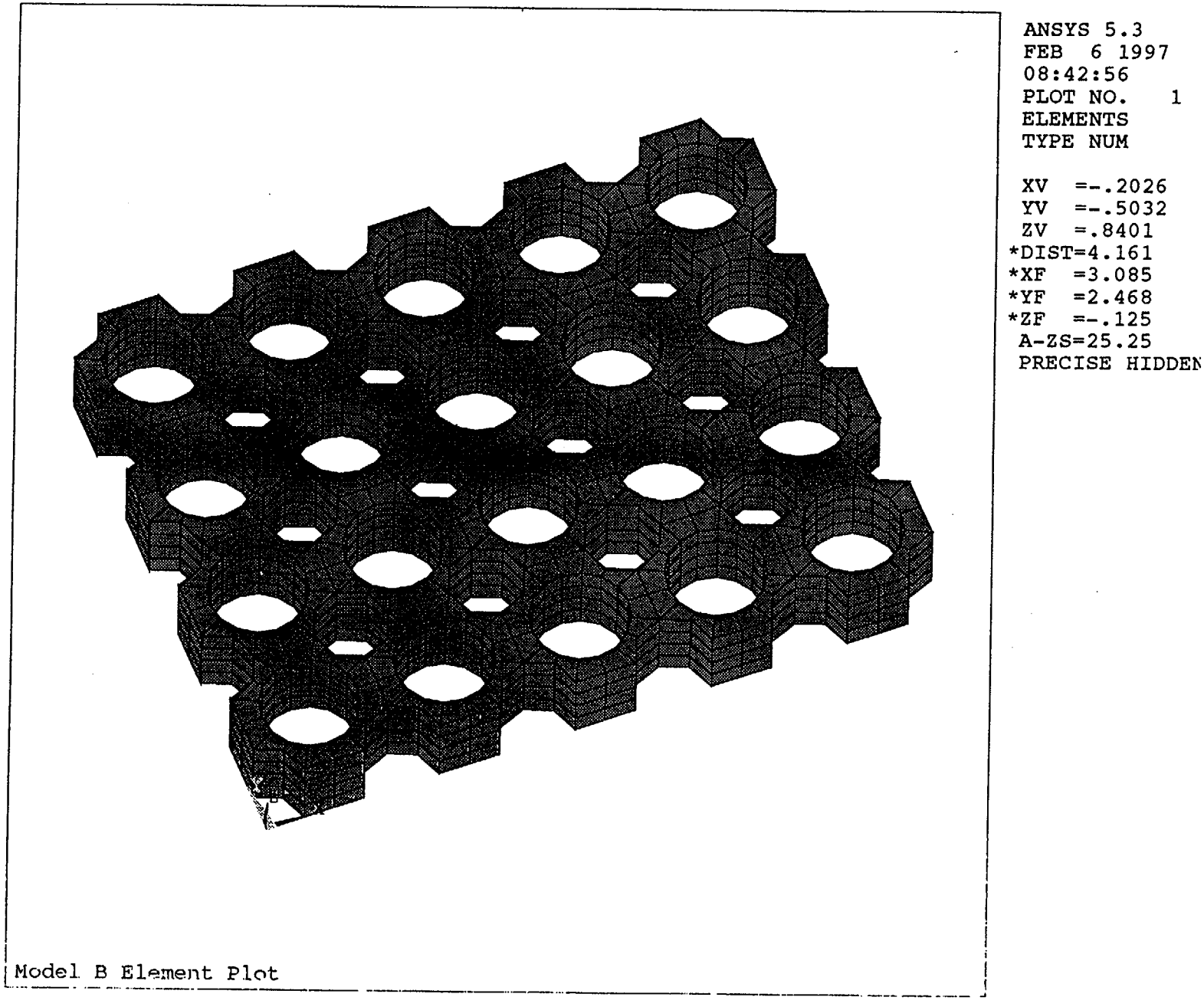

Figure 3-2
Model B - More detailed model of a 4 by 5 tube array.

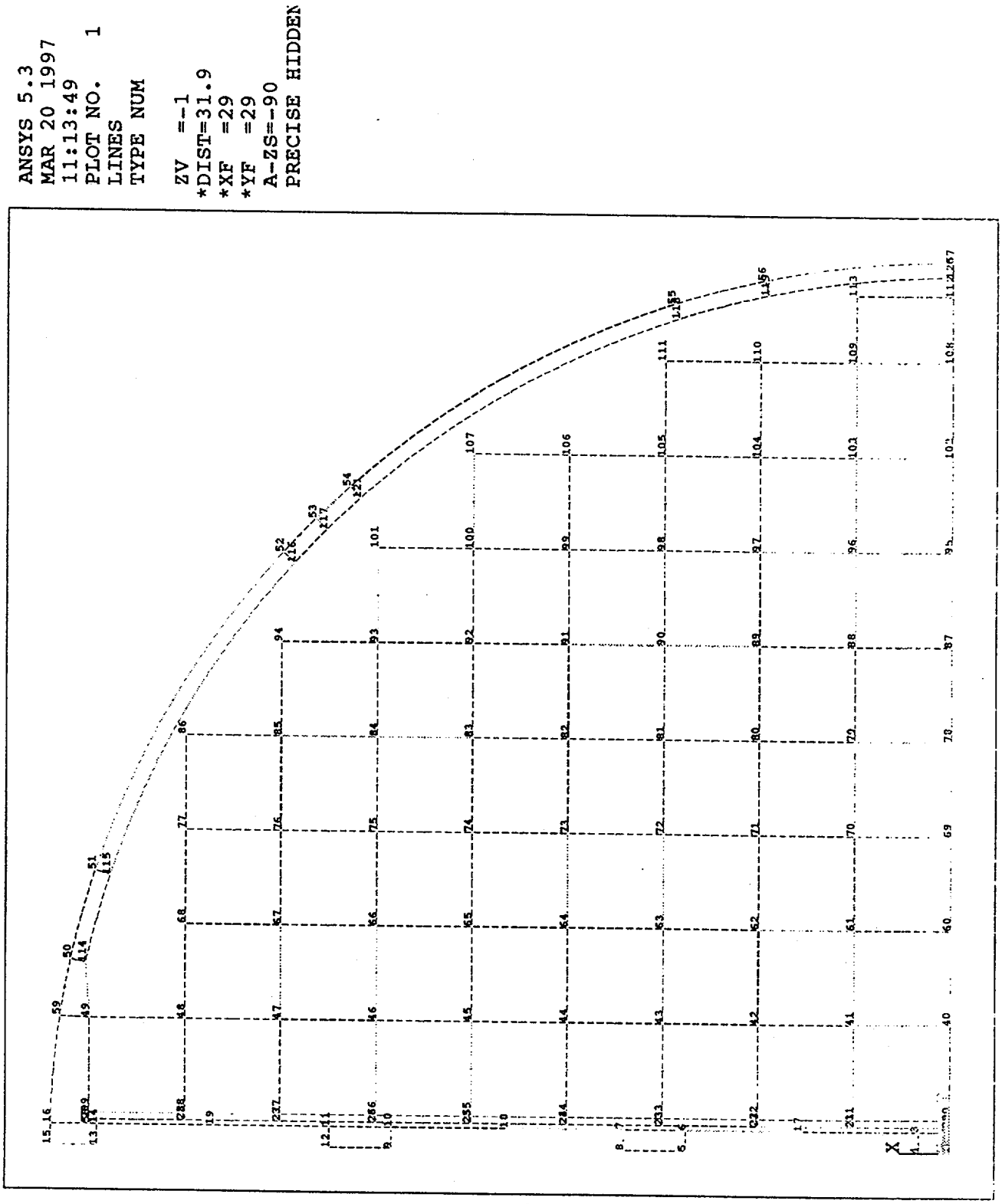

Figure 3-3
An ANSYS line plot of the Model A geometry

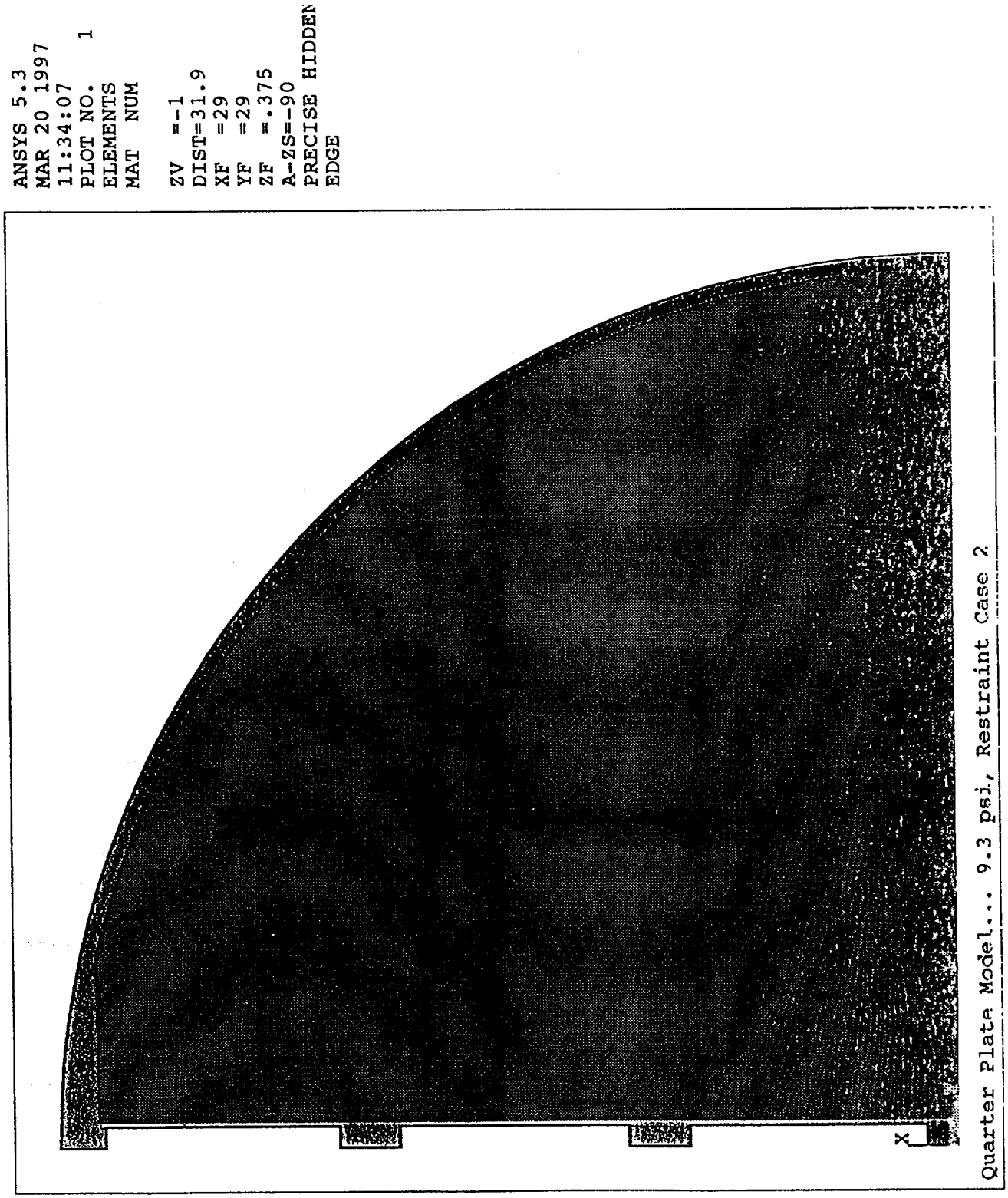

Figure 3-4
An ANSYS element edge/material plot, where material 1 is shown as the outer material and material 2 by the inner material.

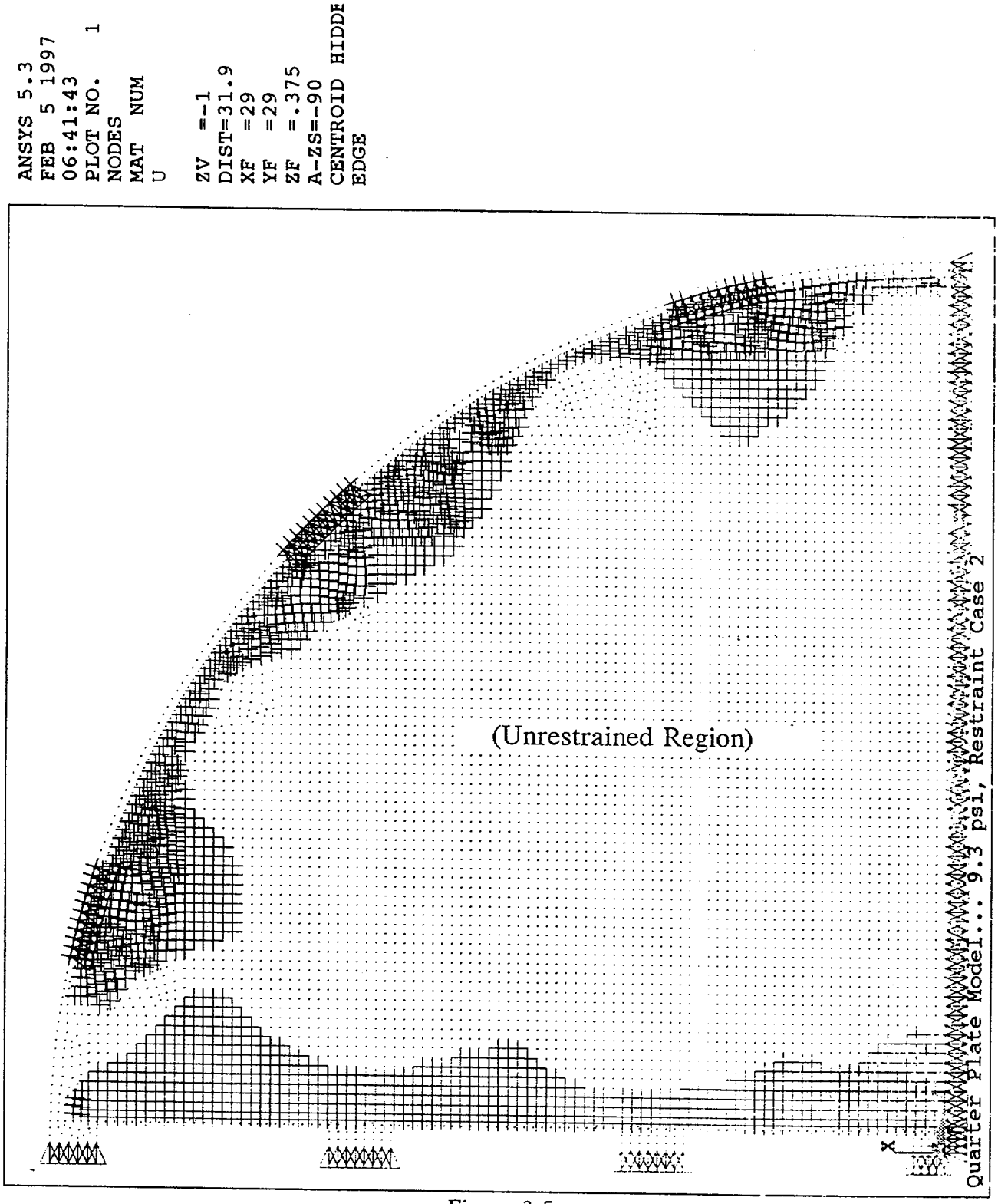

Figure 3-5
Restraint Case 2 - Selected nodes are restrained in the direction perpendicular to the TSP to represent the "locked tube pattern" for a TSP where approximately 1/5 of the outer tubes were locked.

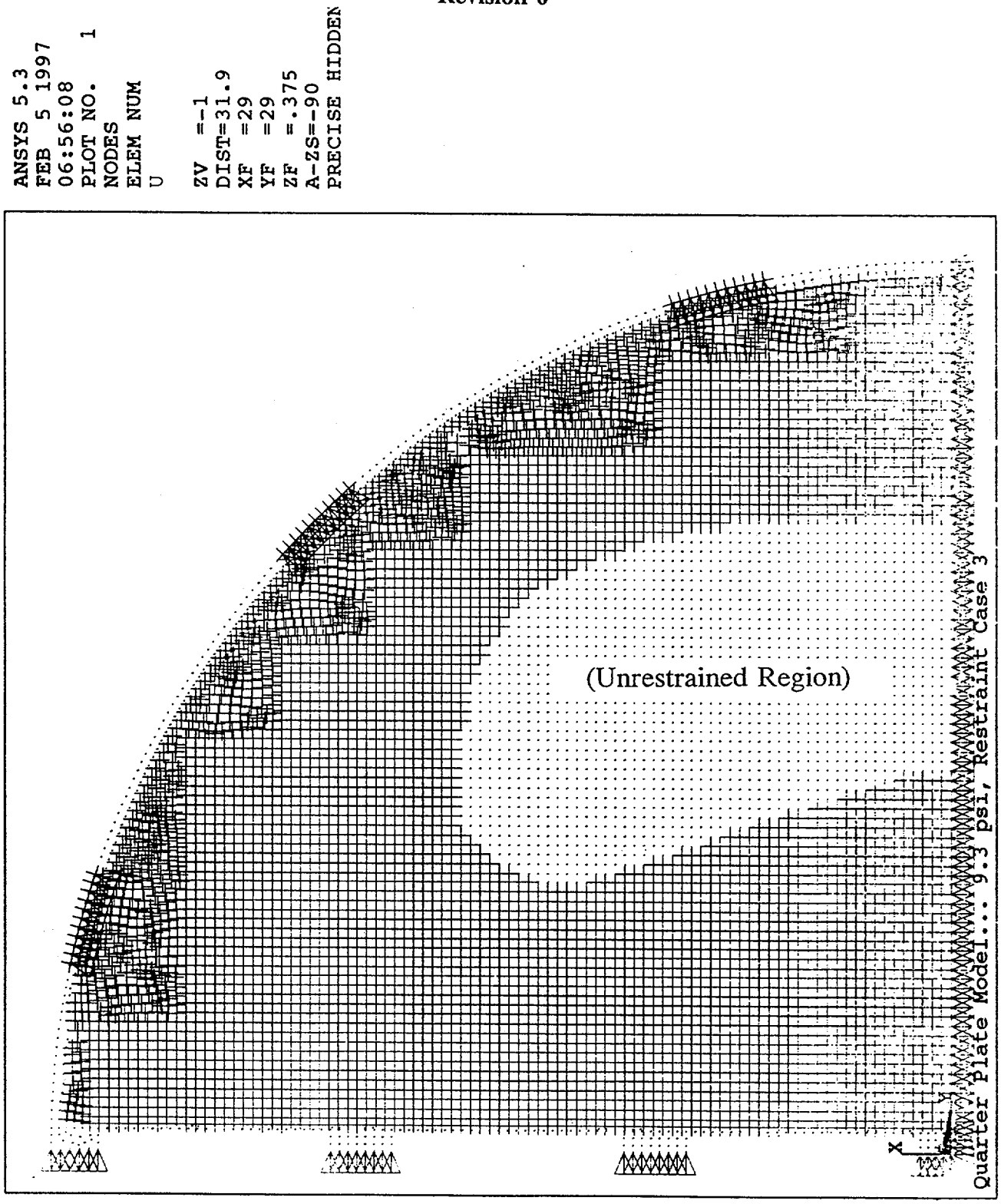

Figure 3-6
Restraint Case 3 - Selected nodes are restrained in the direction perpendicular to the TSP to represent the "locked tube pattern" for a TSP where approximately 4/5 of the outer tubes were locked.

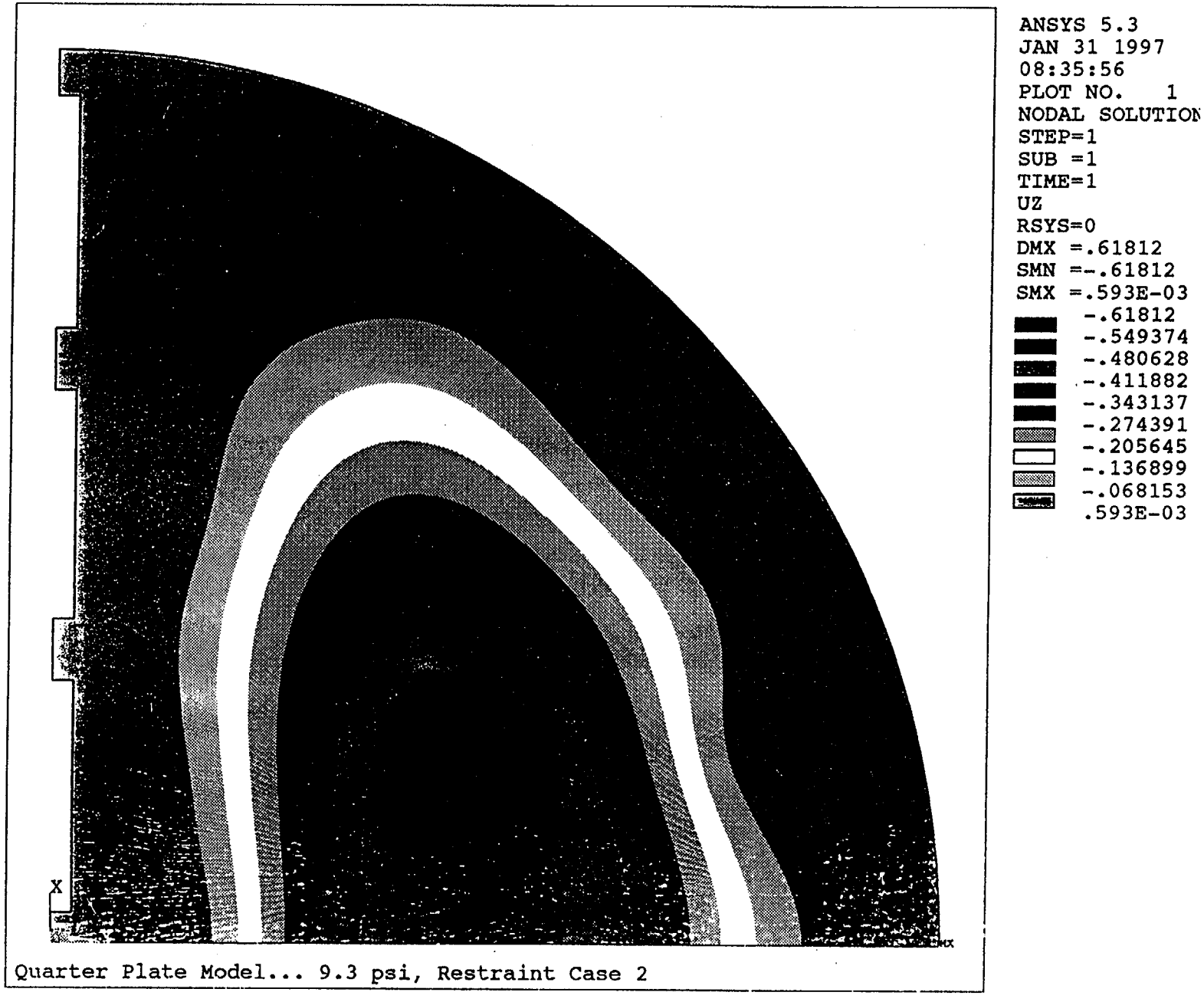

Figure 3-7
Plot of the out-of-plane displacements for Restraint Case 2.

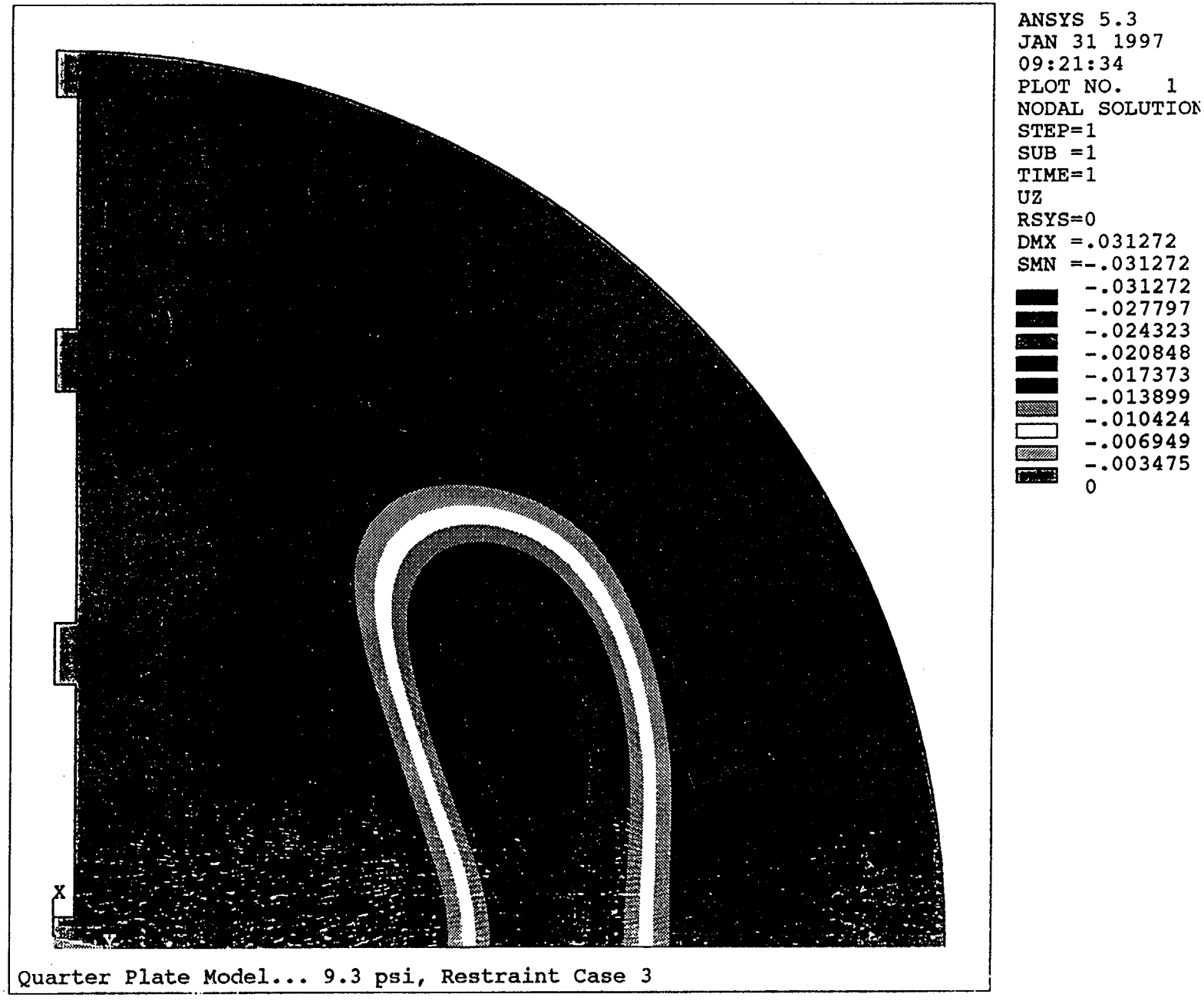

Figure 3-8
Plot of the out-of-plane displacements for Restraint Case 3.

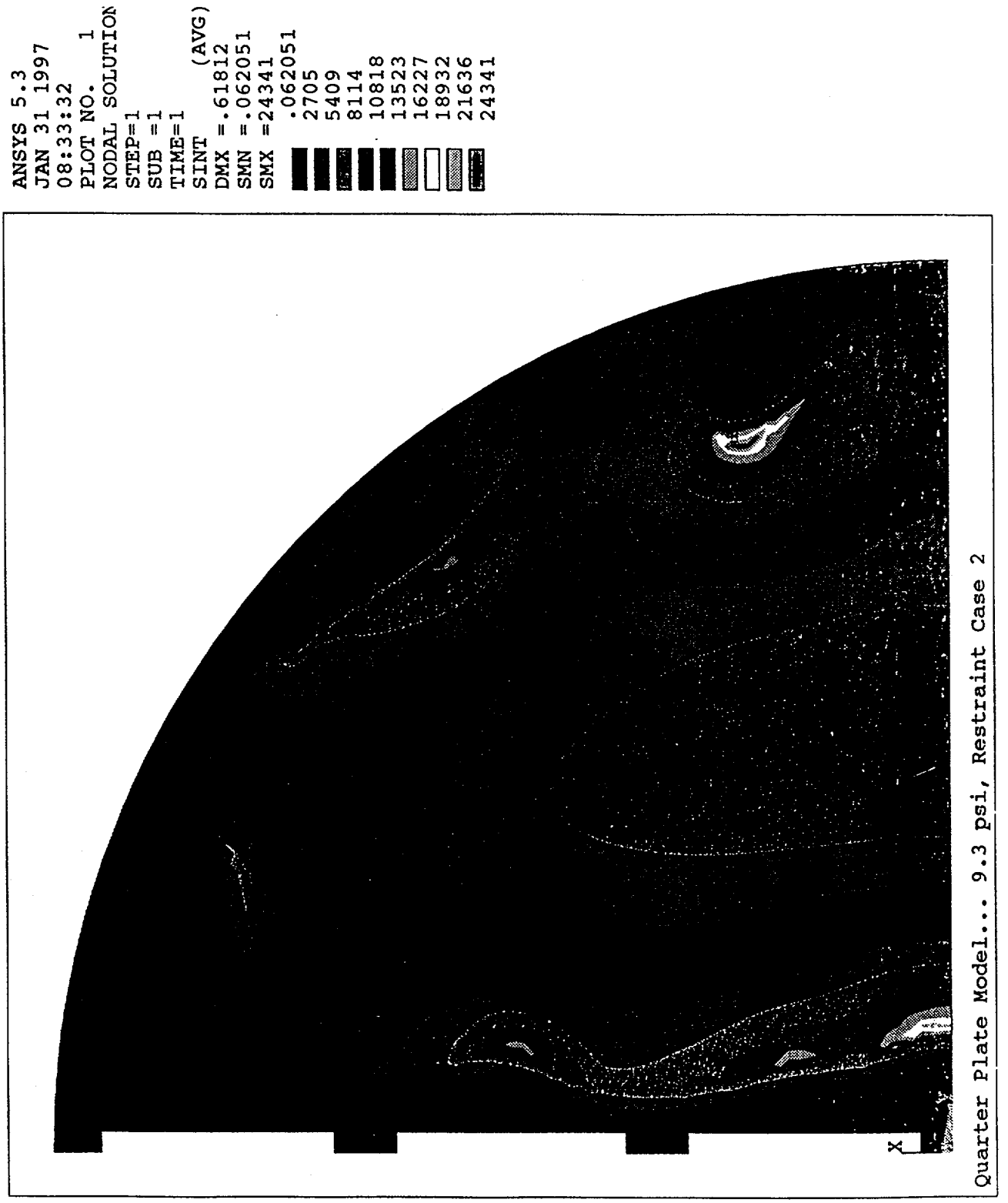

Figure 3-9
Plot of the out-of-plane stress intensities for Restraint Case 2.

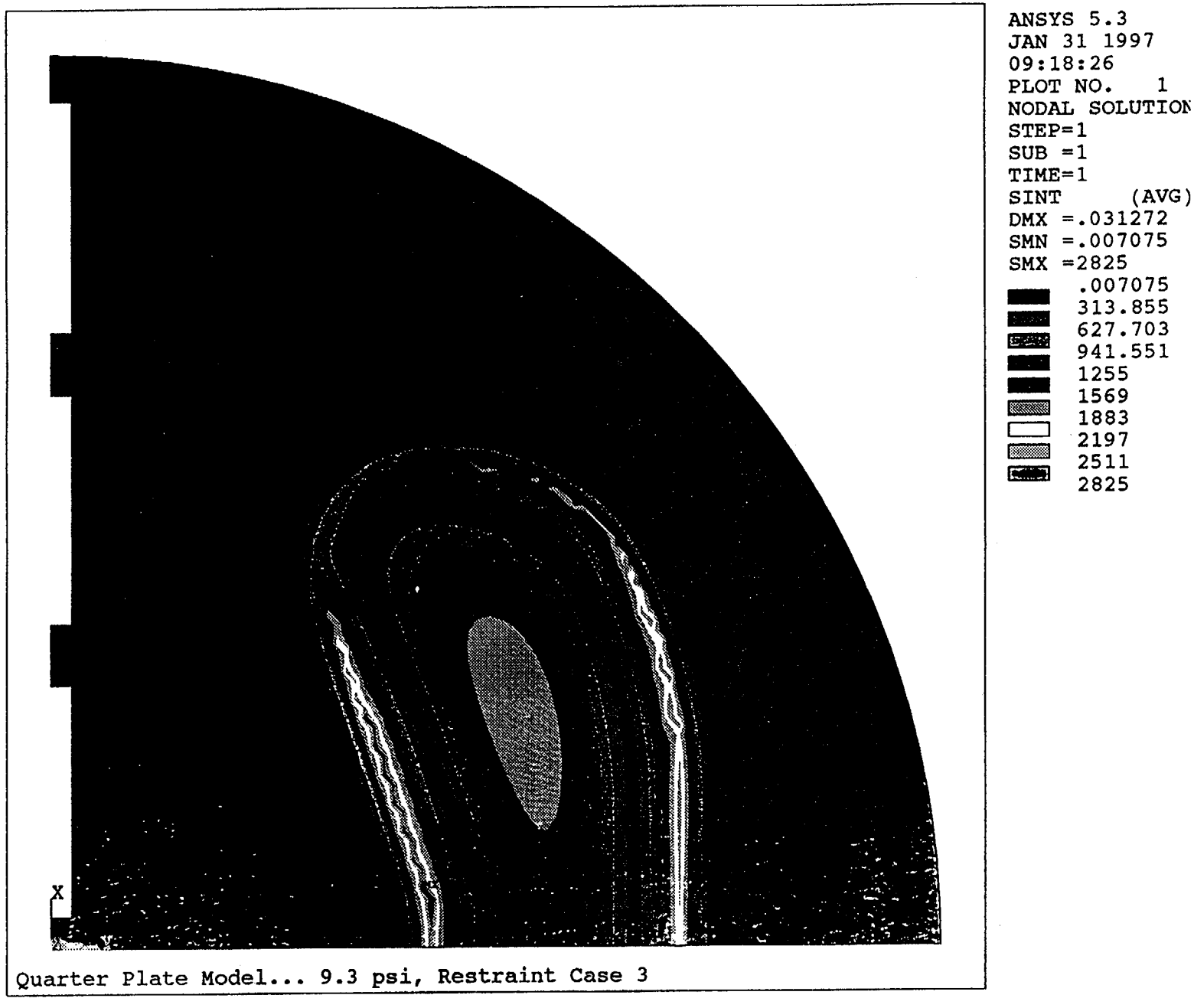

Figure 3-10

Plot of the out-of-plane stress intensities for Restraint Case 3.

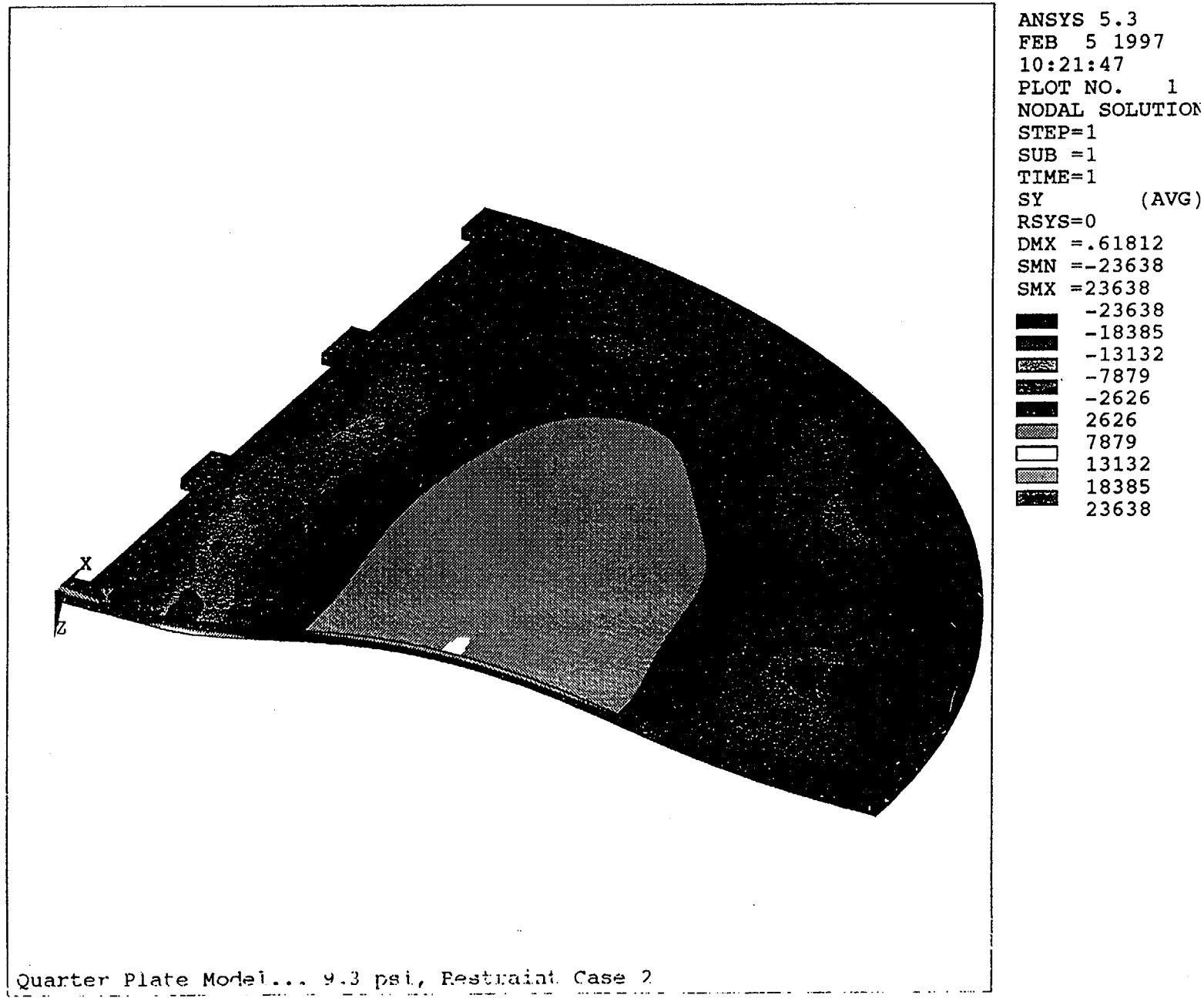

Figure 3-11
Stress plot of the Y-direction stress on the top side of the TSP.

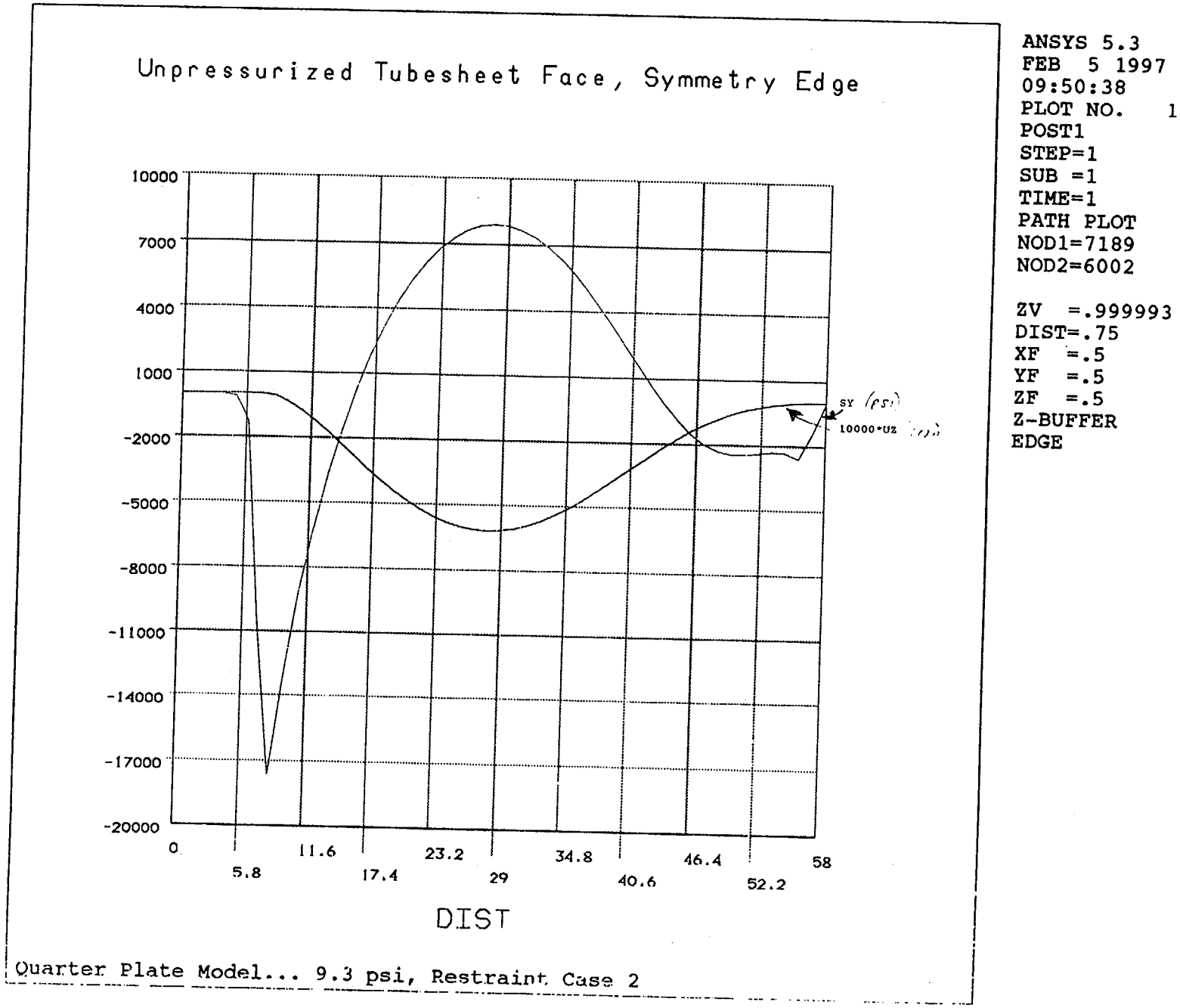

Figure 3-12
Path plots of Y-direction stress and Z-direction displacements on the top side of the plate on the symmetry edge (Y-Z plane).

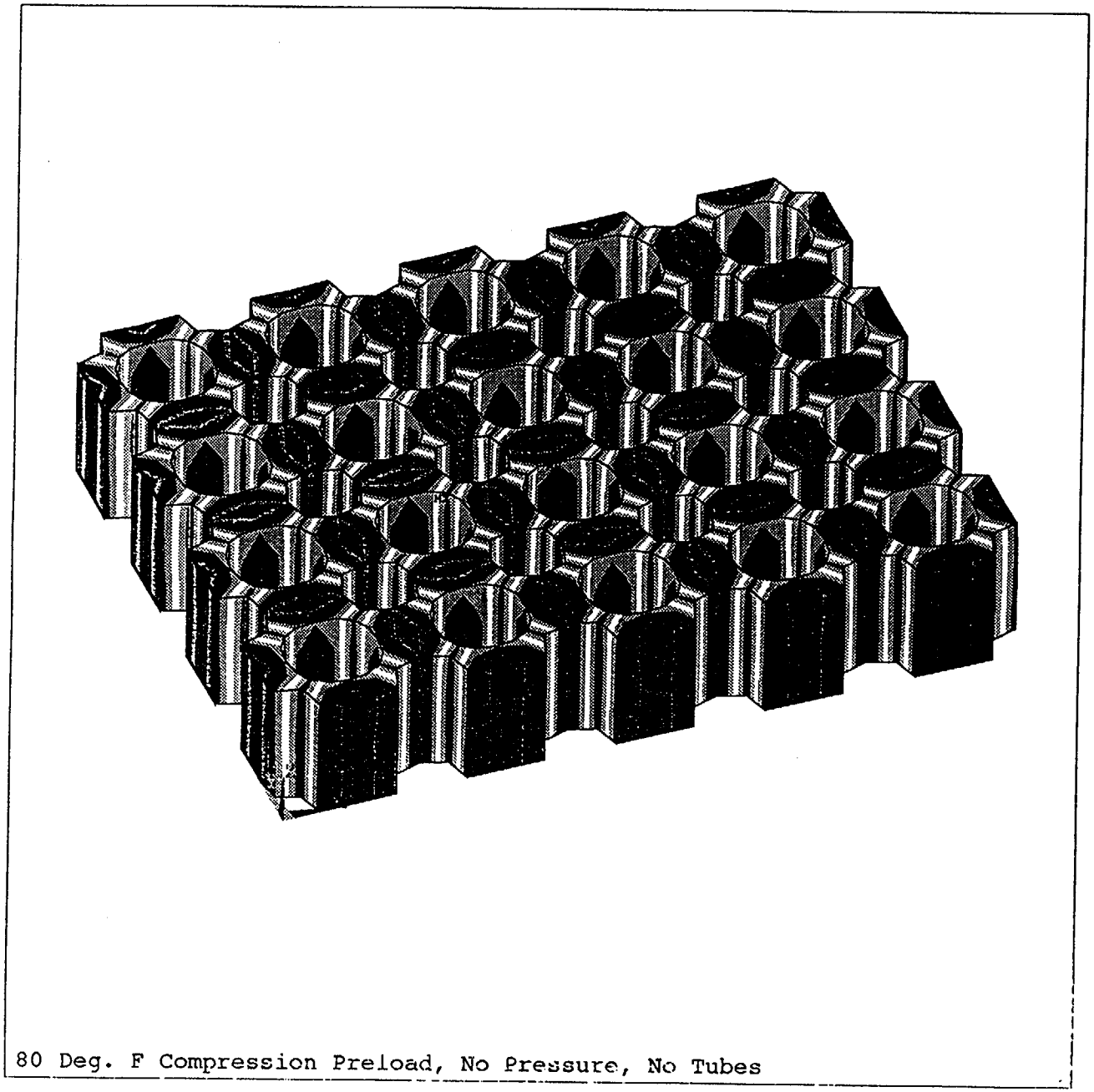

Figure 3-13

The stress results of the compressive preload condition shown in for Model B.

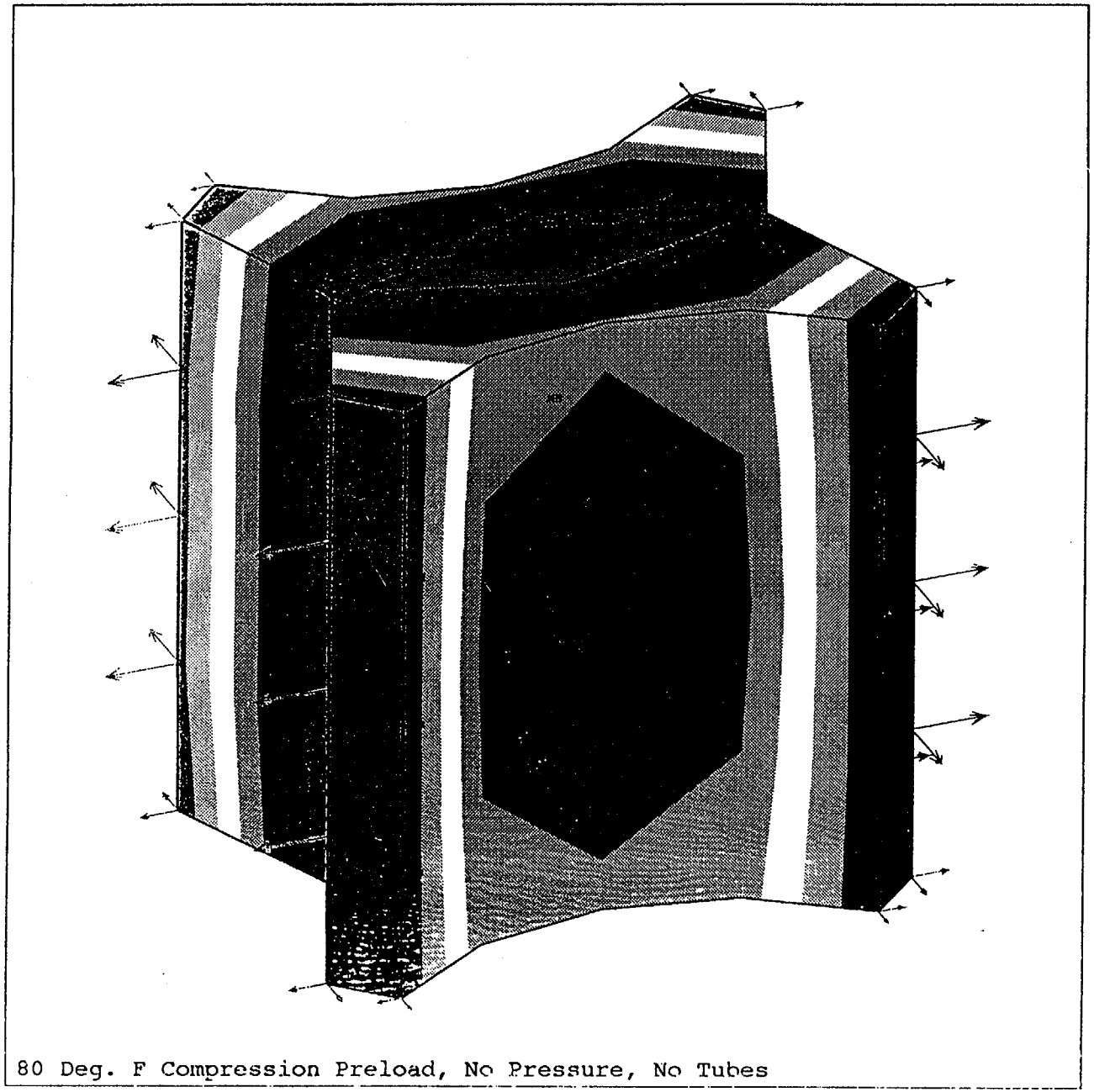

Figure 3-14

The stress results of the compressive preload condition shown for the inner star region of Model B. The compressive nodal forces on the "star" section are shown.

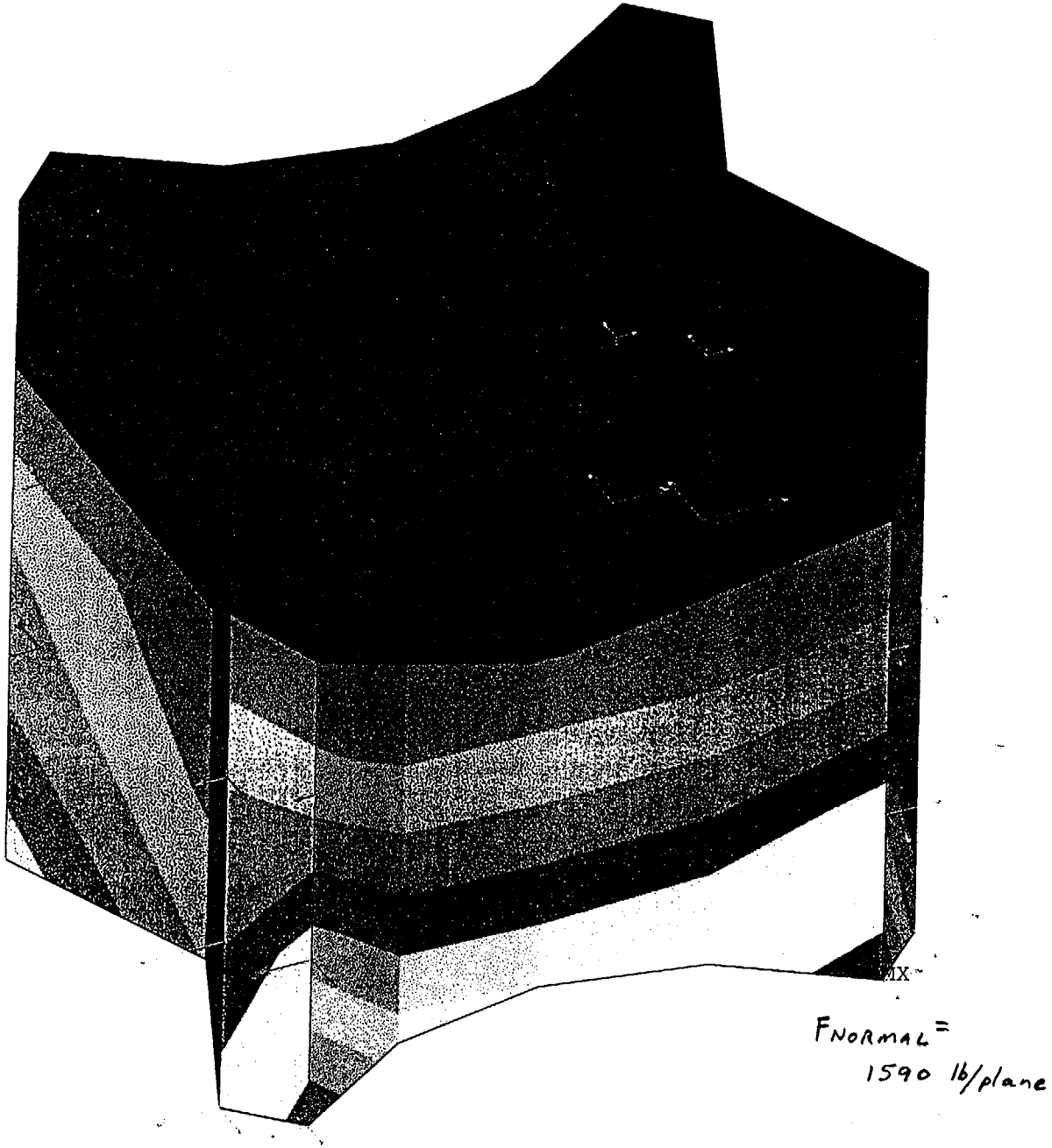

P = 10.3 psi, Case 2 at Symm. Plane & 80 Deg. Preload

Figure 3-15
The stress results of the Restraint Case 2 (10.3 psi pressure plus locked tube preloading) condition shown for the inner star region of Model B. The compressive nodal forces on the "star" section are shown.

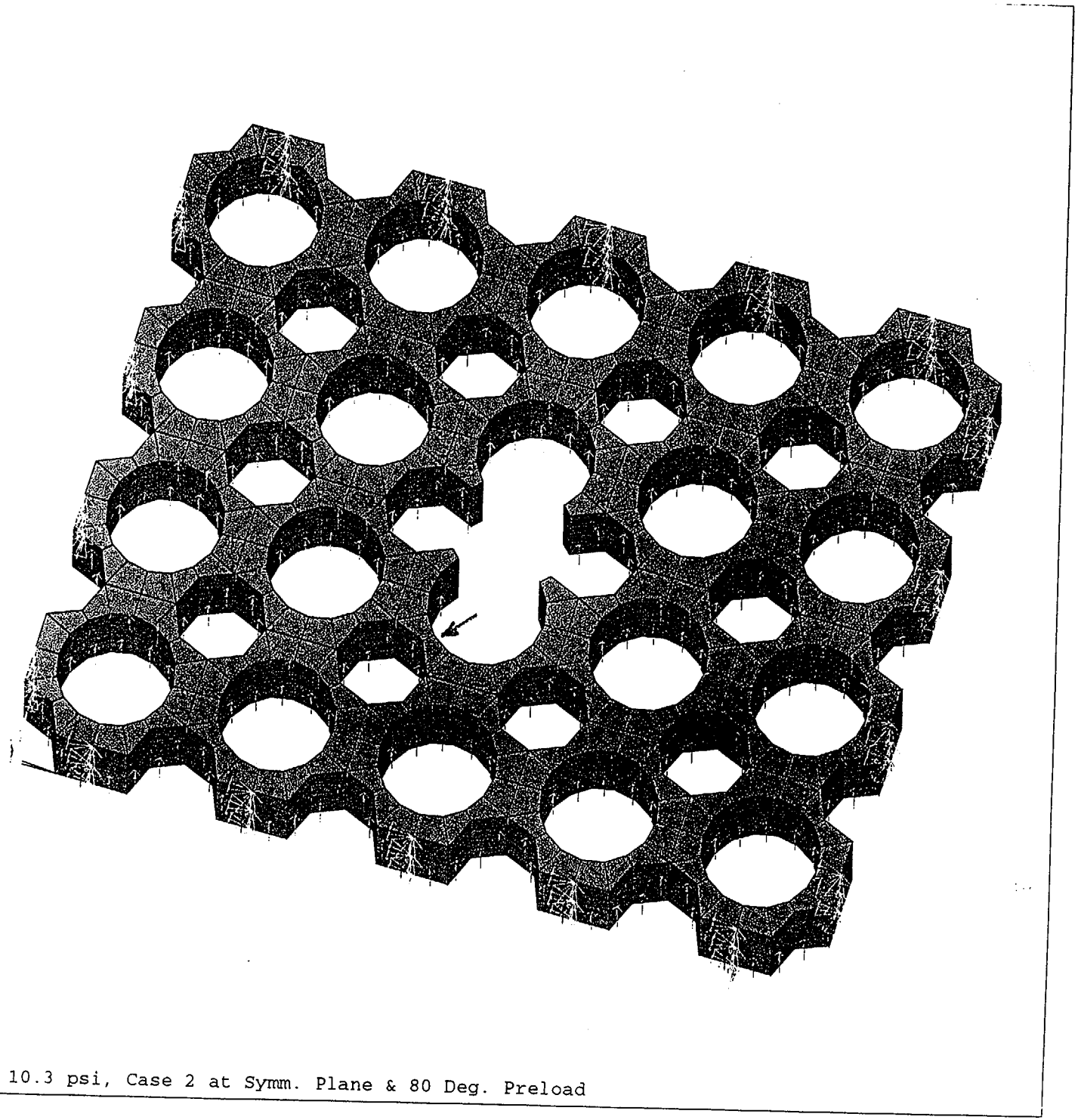

Figure 3-16
A geometry plot of Model B with the center star segment removed.

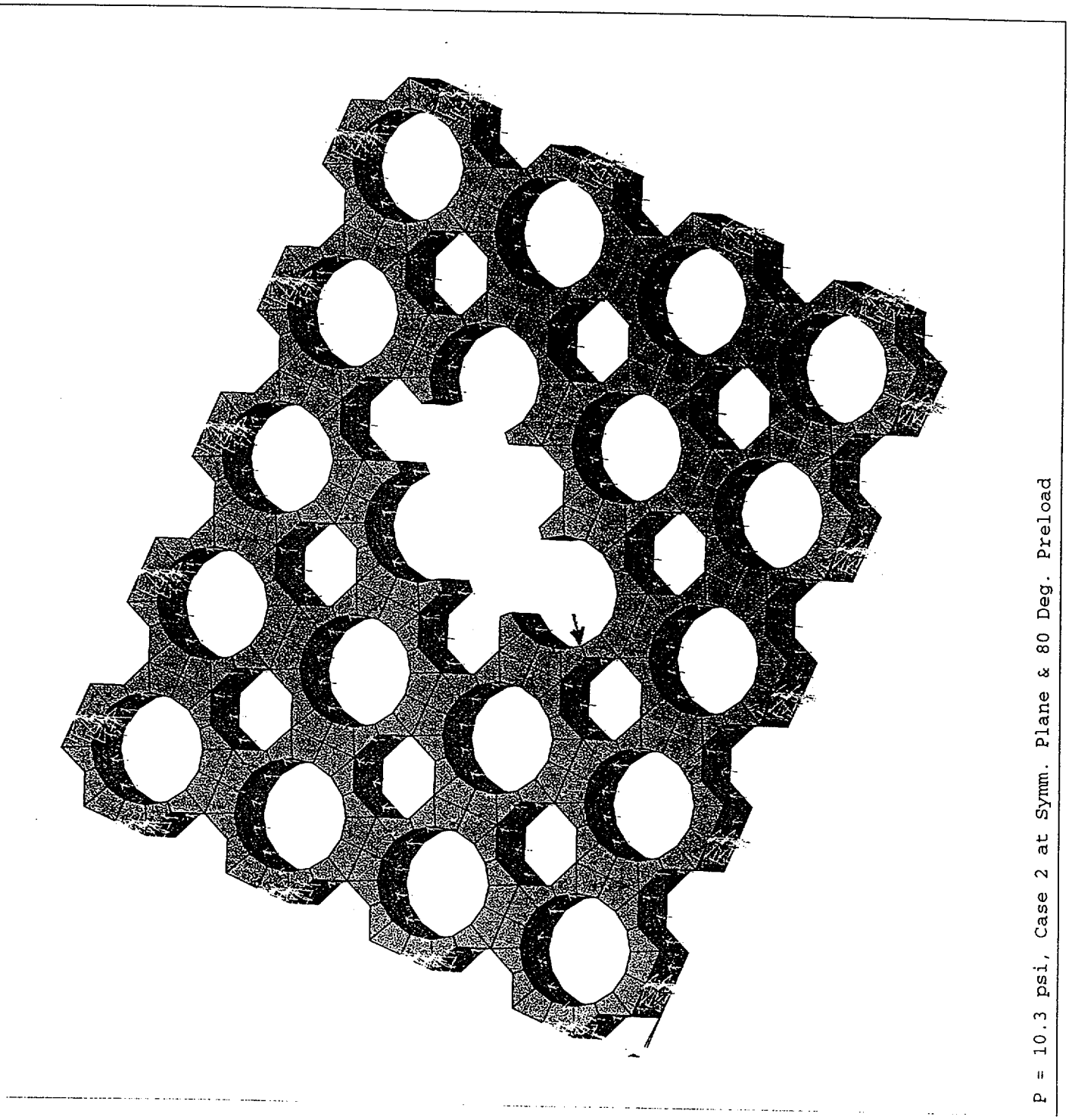

Figure 3-17
A geometry plot of Model B with the removal of two star segments around the center of the model.

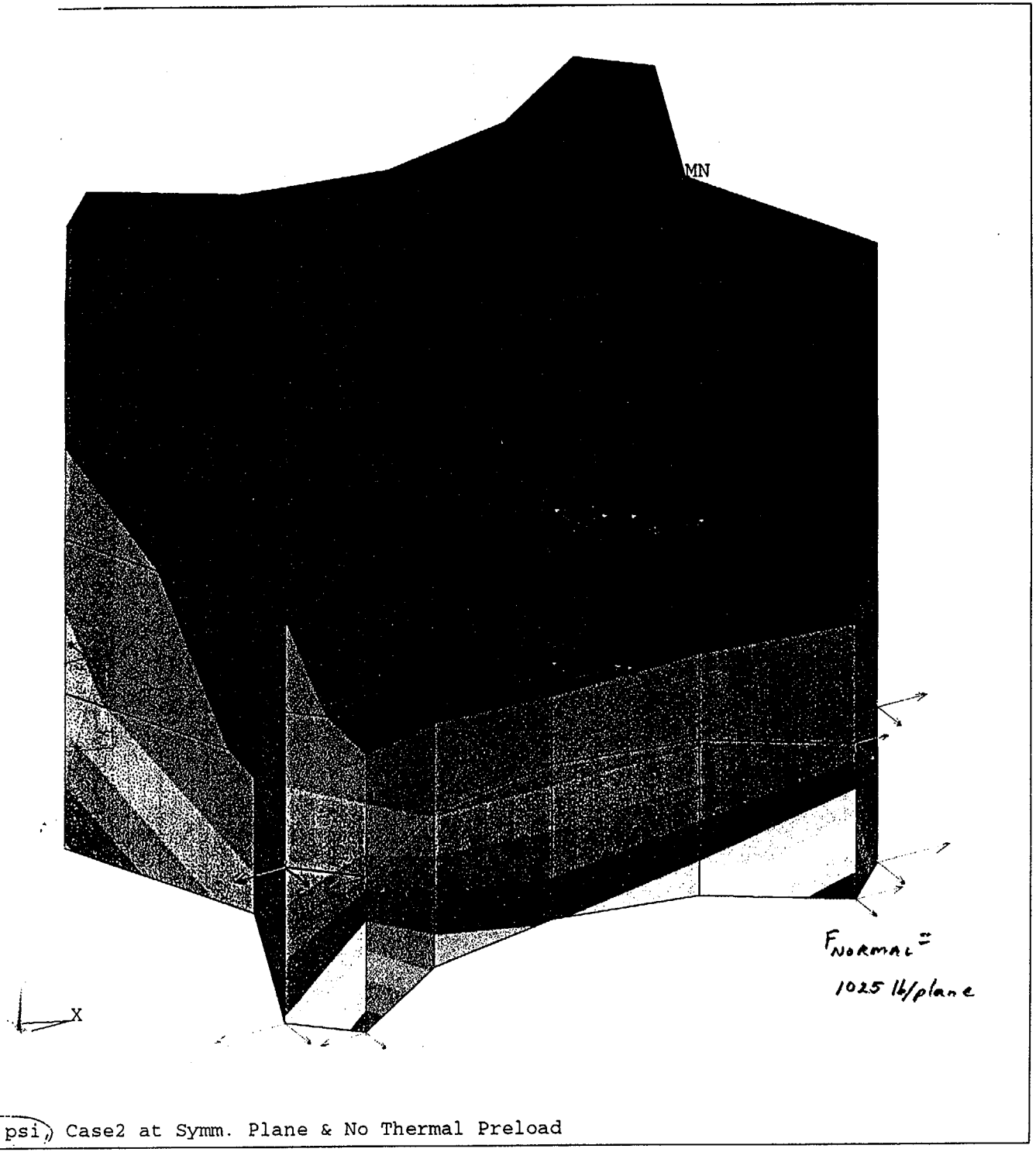

Figure 3-18
Plot of the stress intensities on the star segment with no initial compressive loading caused by denting.

4.0 CONDITIONS IN WHICH A STAR COULD BECOME FREE

Previous testing and removal of portions of the TSP has shown that the ligaments at IP2 are cracked [1]. The analysis described in Section 3.0 has shown that cracked ligaments will not become free if subjected to a steam line break occurring simultaneously with an earthquake. The assumptions that were made in the preceding analysis were that the ligaments between the tube holes and the flow holes were cracked and that the ligaments were not thinned. It is evident from the work previously performed [1] and referred to in the first section of this report that the ligaments are cracked and not thinned. There is no evidence of a thinning mechanism.

The analysis described in Section 3.0 also applies to ligaments that are "trapped". These ligaments are tightly confined by other portions of the TSP. This is not the case near the flow slots where the cracking has extended into the flow slots. The regions near the flow slots could become free.

In summary, the only cases in which it is considered feasible that a cracked ligament could become dislodged during normal operation or during an accident are the following:

1) If the ligaments were thinning due a mechanism like erosion/corrosion. This does not seem to be the case.

2) If individual ligaments were thin due to initial manufacturing tolerances. This is feasible, but would occur randomly. Additionally, if a flow hole were off center and resulted in a thin ligament near a tube hole, the other ligaments associated with the off-center hole would be thicker than normal. It is not considered feasible that four thinned ligaments due to manufacturing could be located on the same tube hole.

3) Near the flow slots. Cracks are evident in this region. Due to the condition of the flow slots, the potential of a portion of the TSPs becoming free is discussed in the next section.

5.0 BEHAVIOR NEAR THE FLOW SLOT

The flow slots in the lower TSPs have been noted to have experience hour-glassing. It has been reported that there is no hour-glassing in the sixth TSP [5].

There are six flow slots in each TSP. They are located in the tube lane. As a result of denting, the in-plane compression has caused yielding of the TSP and closing of the middle of the flow slots. A series of photographs are provided in Figures 5-1 through 5-6. These photographs are show the following:

Figure 5-1	SG 21, Nozzle Side (June, 1991)
Figure 5-2	SG 21, Manway Side (June, 1991)
Figure 5-3	SG 22, Nozzle Side (February, 1993)
Figure 5-4	SG 22, Manway Side (February, 1993)
Figure 5-5	SG 23, Nozzle Side (June, 1991)
Figure 5-6	SG 23, Manway Side (June, 1991)

The first row of tubes have all been preventively plugged. The first flow slot on Steam Generator 23 (next to the wrapper) on the nozzle side is the location where a section of the TSP was cut out for examination. The reinforcement that was placed in the SG is evident in Figure 5.5. It is reported [5] that the extent of the hourglassing in the flow slots has been stable for many years. In fact, a photograph of SG 22 nozzle side taken in 1986 is shown in Figure 5-7. When compared to Figure 5-3 taken seven years later, the extent of hourglassing appears to be the same.

Some of the flow slots are cracked through from the tube holes into the flow slot. Examples of this can be seen in Figure 5-5 in flow slot 3, in Figure 5-3 in flow slots 2 and 3, and in Figure 5-1 in flow slot 3. If a TSP is cracked through into the flow slot at both ends of the flow slot and all the ligaments are uniformly cracked, it is feasible that the TSP can become loose. The path of fracture would be through the ligaments between the first row of tubes and the flow holes between the first and second rows of tubes and the two crack paths between the flow holes and the flow slots near the end of the flow slots.

Several points must be made in considering the likelihood of the TSP becoming loose.

1) The condition has not changed in many years. If the flow slot did not become loose in up to ten to fifteen years of operation (or more), it is unlikely that it would become loose during normal operation in the future.

2) If the TSP section did come free, it could only drop straight down. The first row of tubes are all preventively plugged and would protect the second row from damage.

3) The most highly loaded TSPs during a steam line break are the uppermost plates. The lower plates that have hour-glassing are less highly loaded. If a steam line

break were to occur, the most severely cracked plates would be less highly loaded.

4) If a TSP section did come free during a steam line break, the first row of plugged tubes would provide the short term protection required for any active tubes. The steam generator would subsequently have no secondary side flow and vibration and fretting would not be a potential issue.

Cracking at the flow slots represent a potential location of separation of the TSPs. The first row of tubes are plugged and active tubes will be protected from any loose parts of the TSP. Periodic examination of the TSP and the flow slots is performed to assure that they are in-place.

The removal of tubes to allow the removal of a section of the TSP was performed in SG 23. The current condition with the reinforcement that was installed is shown in Figure 5-5. Protection is provided from a section of the TSP coming free by the preventively plugged Row 1 tubes. These were plugged due to cracking that was occurring in the industry due to the tight radii of the Row 1 tube bends. It is recommended that the "exposed" Row 3 tubes in the region of the reinforcement also be plugged to provide protection to active tubes from any section of the TSP near the flow slots that might become free. The specific tubes that are recommended to be plugged are the following:

Row 3, Tubes 2 to 14

Tube 1 in Row 3 is already plugged. The plugging of these tubes will provide protection to <u>all</u> active tubes from the inadvertent release of any TSP sections from the flow slots.

The ends of several of the flow slots in the region of the TSP cracks are deformed. The deformation has the potential to affect Row 2 tubes. A review was also performed as a part of this study of the potential for Row 2 distress due to flow slot hourglassing and TSP cracking. It is recommended that the following active tubes be preventively plugged:

SG-22 Row 2	Tubes 13, 18, 28, and 48
SG-23 Row 2	Tubes 29, 30, 33, 43, 49, and 60

These recommended tube plugging locations are shown in the Tube maps shown in Figures 5-8 and 5-9.

No tubes are recommended to be plugged in SG 21 or SG 24 because of flow slot deformation.

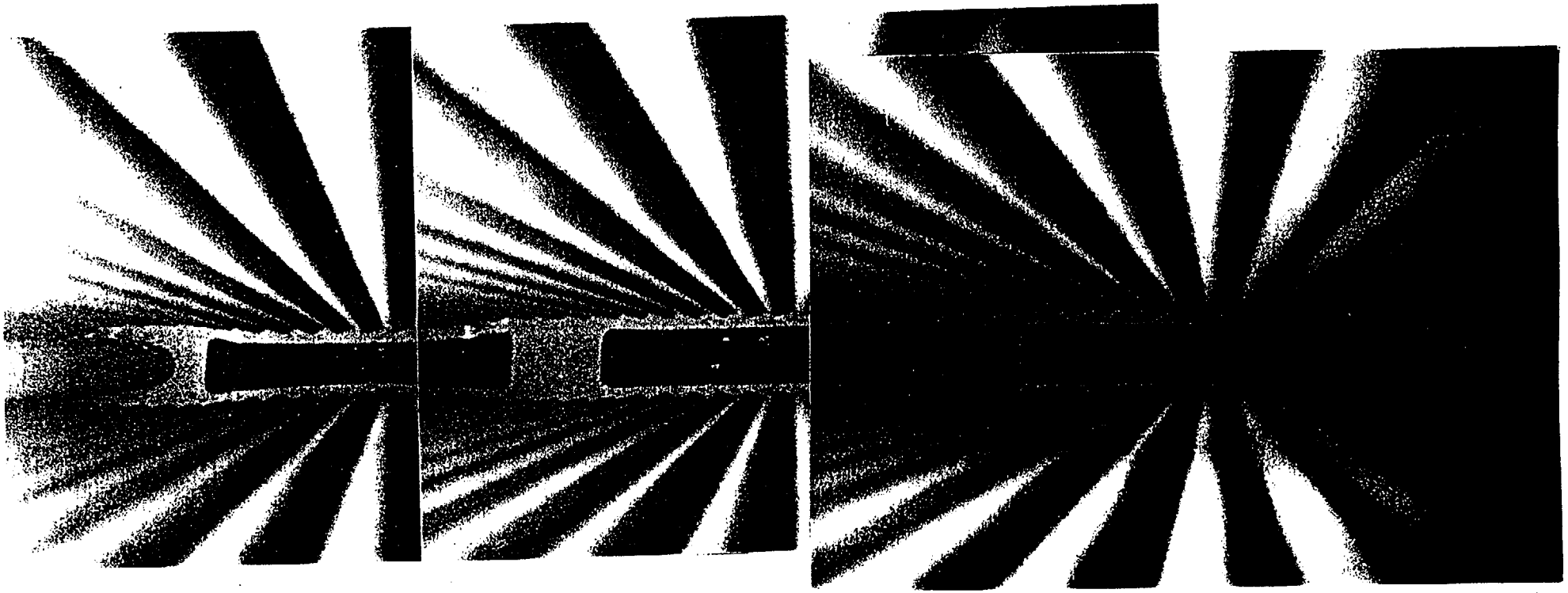

Flow Slot No. 3 Flow Slot No. 2 Flow Slot No. 1

Figure 5-1
Steam Generator Flow Slot in The First TSP
SG 21, Nozzle Side (June, 1991)

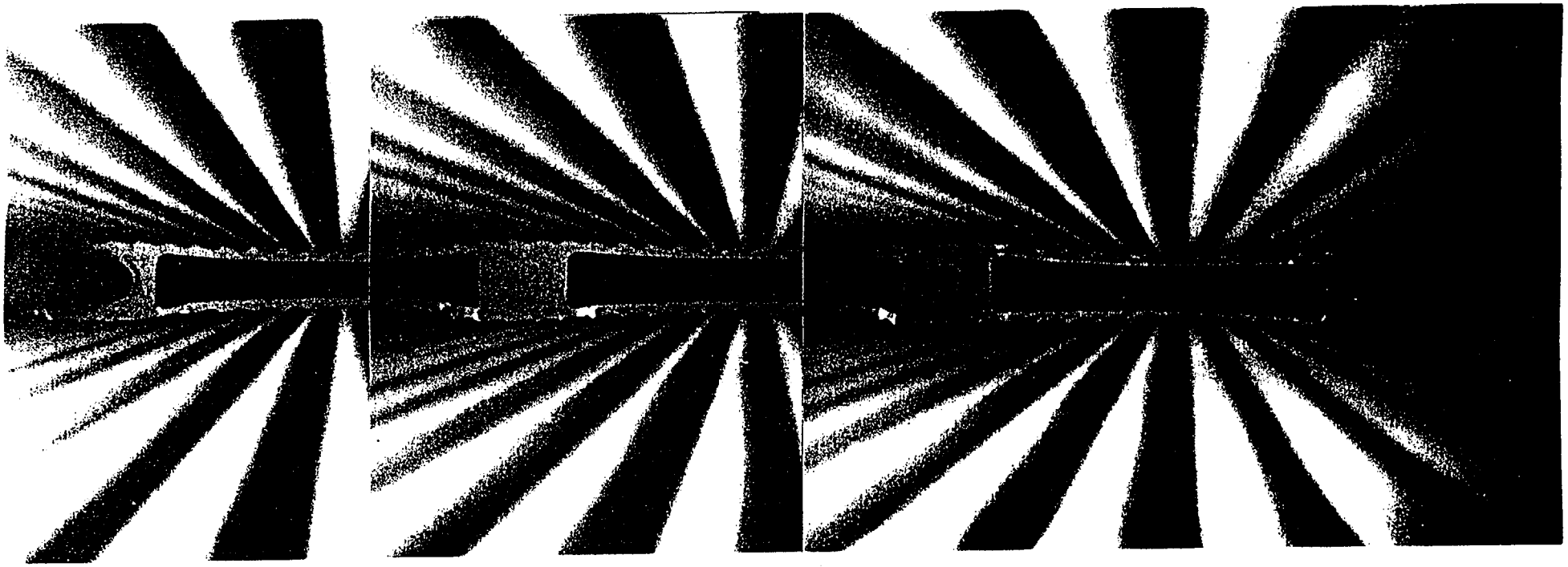

Figure 5-2
Steam Generator Flow Slot in The First TSP
SG 21, Manway Side (June, 1991)

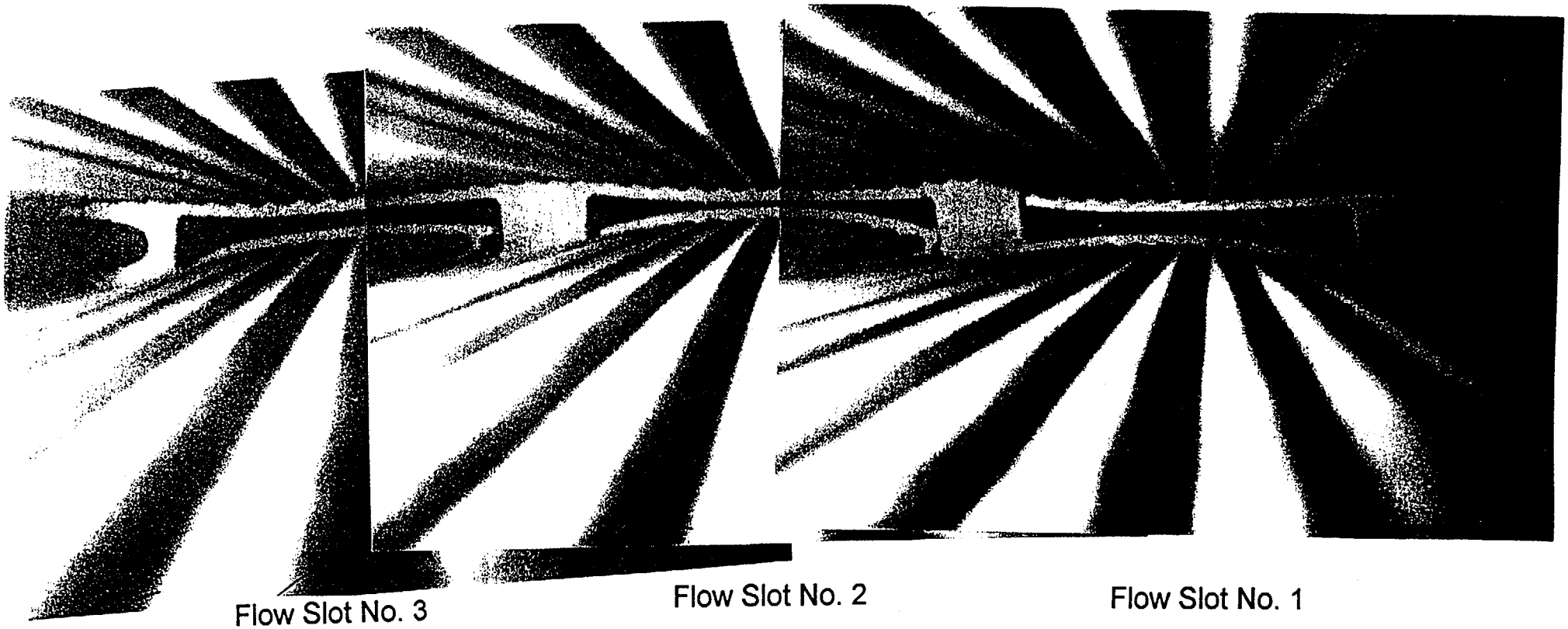

Figure 5-3
Steam Generator Flow Slot in The First TSP
SG 22, Nozzle Side (February, 1993)

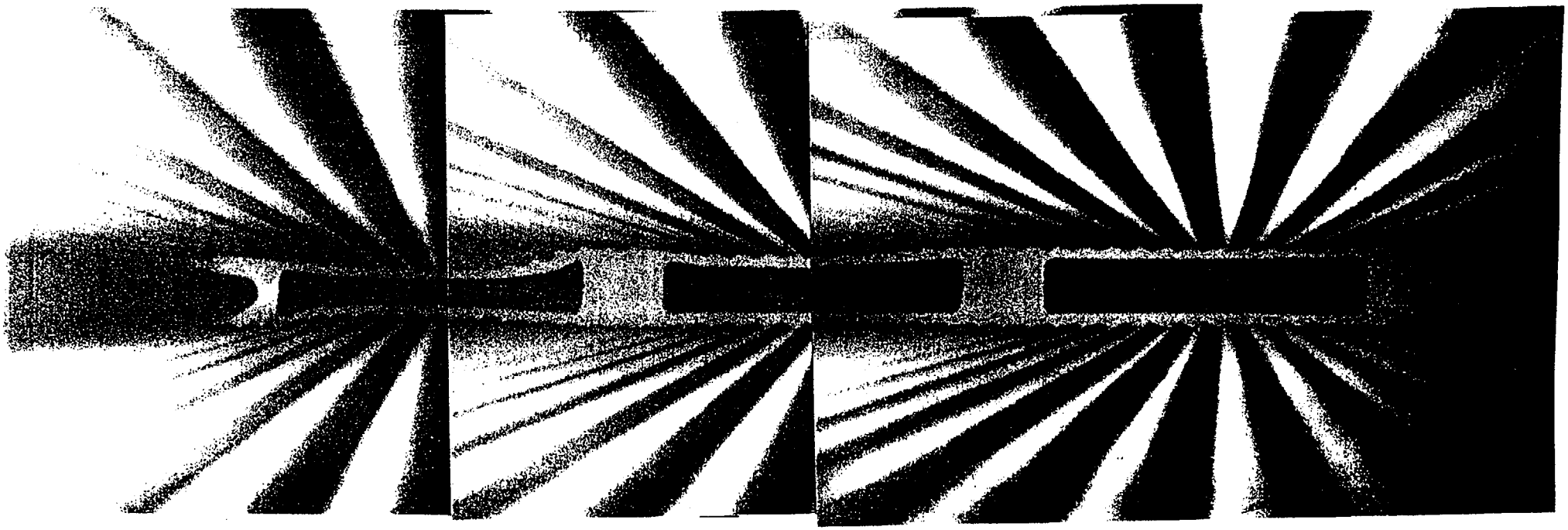

Figure 5-4
Steam Generator Flow Slot in The First TSP
SG 22, Manway Side (February, 1993)

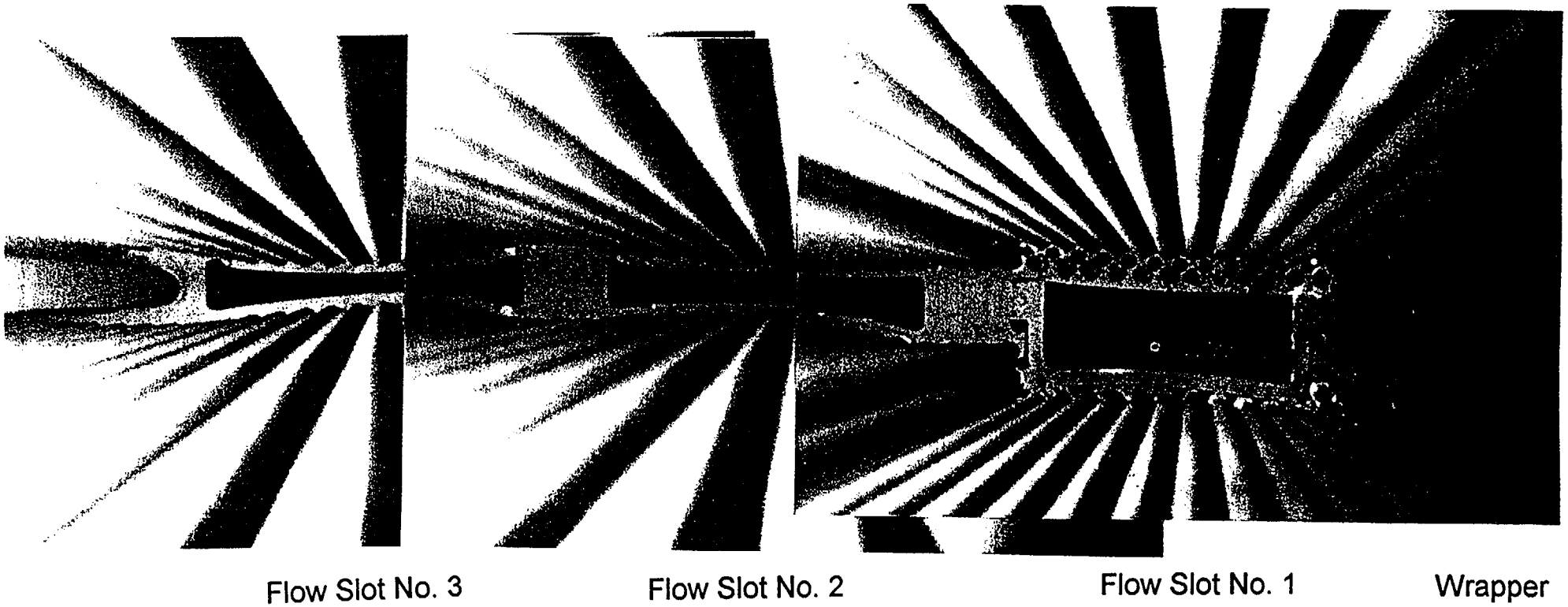

Figure 5-5
Steam Generator Flow Slot in The First TSP
SG 23, Nozzle Side (June, 1991)

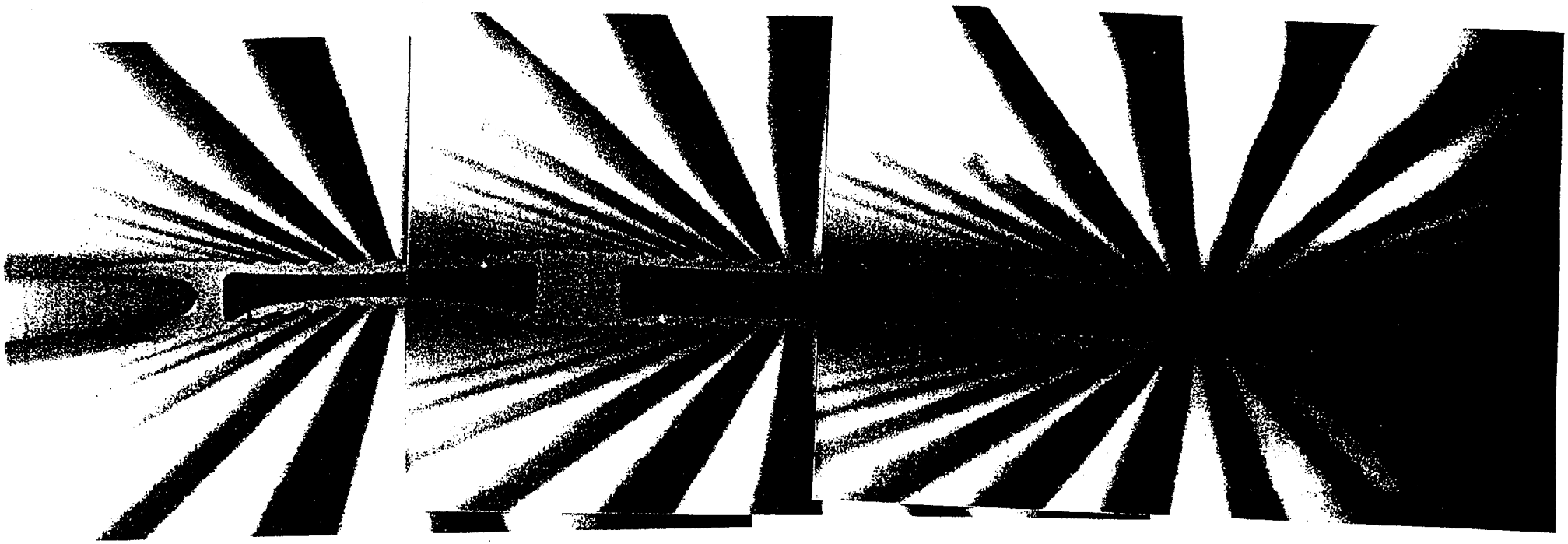

Flow Slot No. 3 Flow Slot No. 2 Flow Slot No. 1

Figure 5-6
Steam Generator Flow Slot in The First TSP
SG 23, Manway Side (June, 1991)

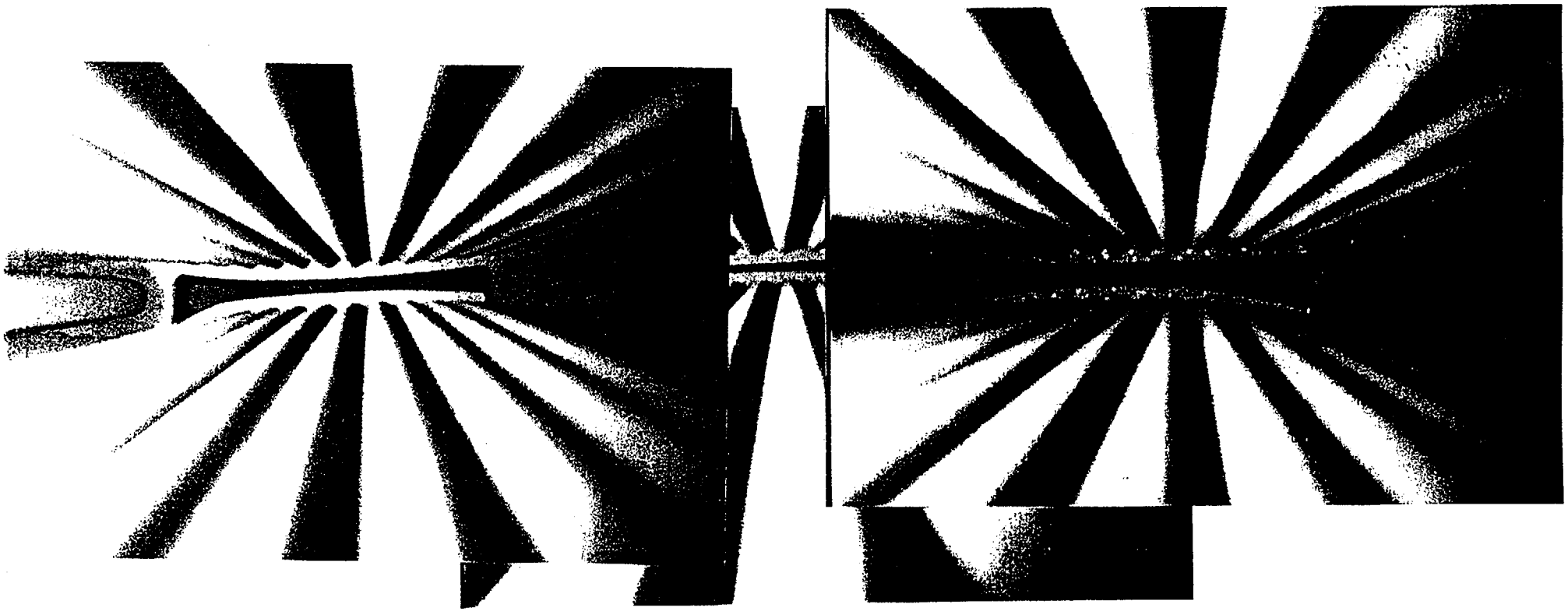

Figure 5-7
A photograph of SG 22 nozzle side flow slots taken in 1986.

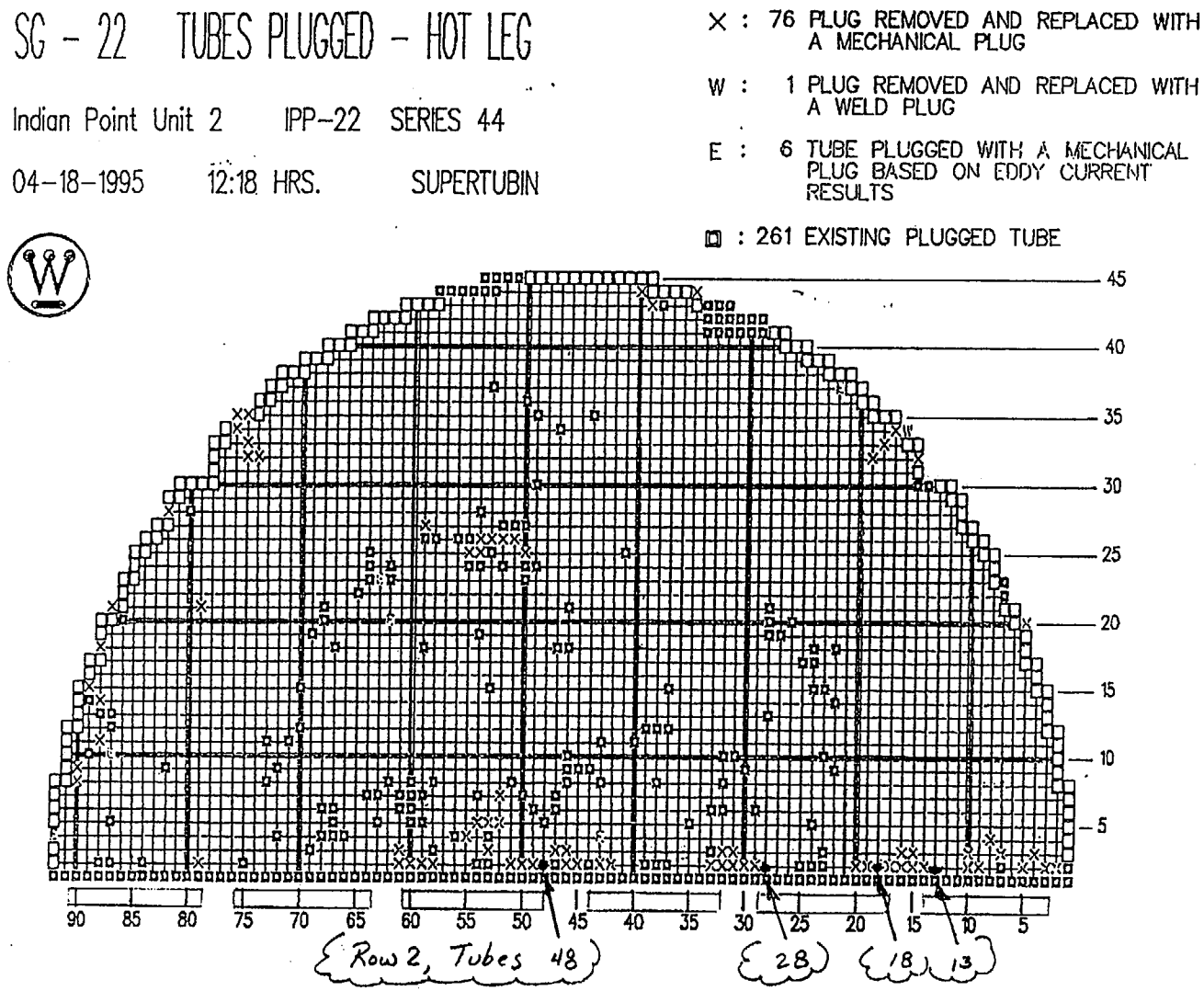

Figure 5-8
SG 22, Tubes Plugged as of April 18, 1995 Showing the Locations of the Flow Slots and the Tubes Recommended to be Plugged

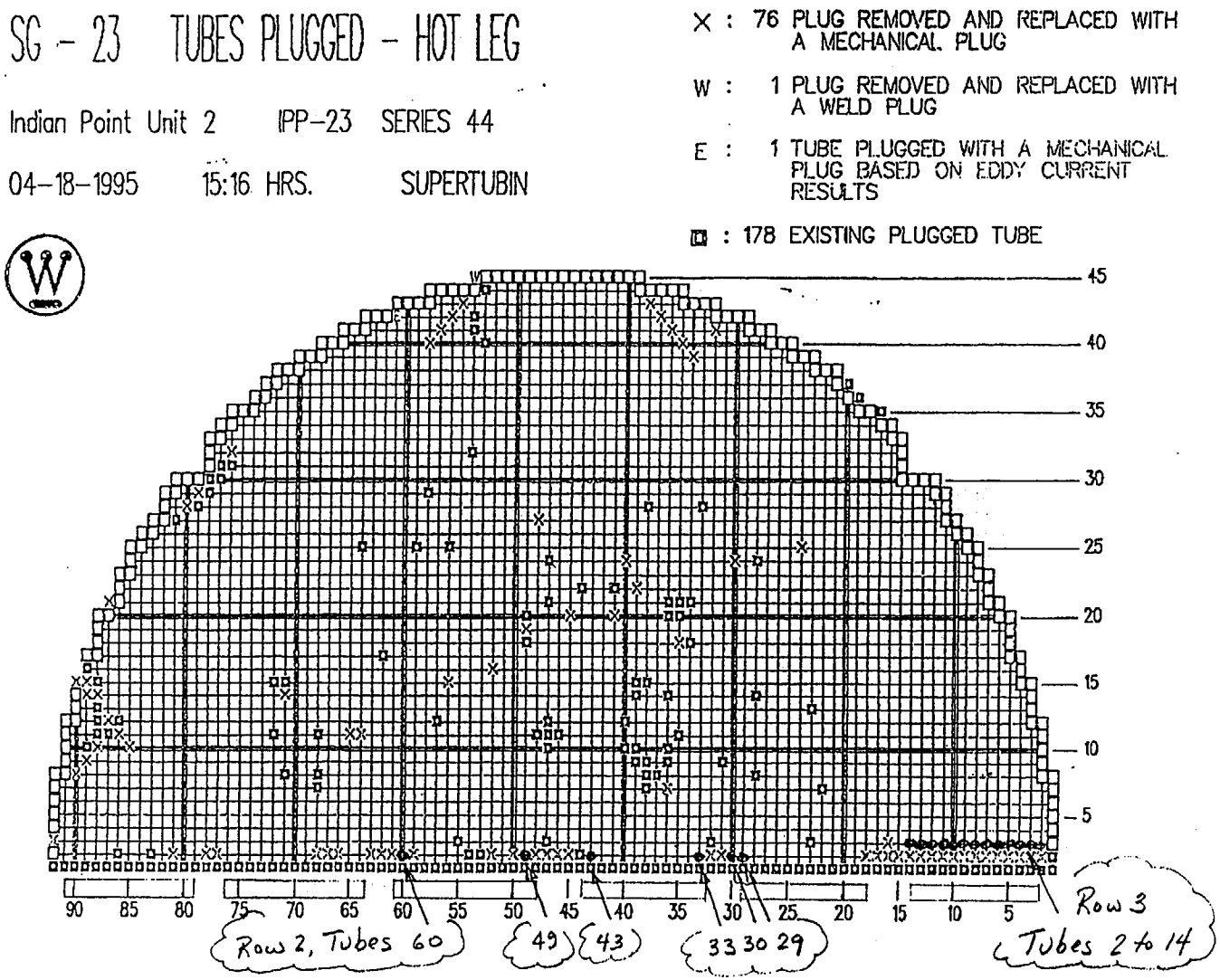

Figure 5-9
SG 23, Tubes Plugged as of April 18, 1995 Showing the Locations of the Flow Slots and the Tubes Recommended to be Plugged.

6.0 CONCLUSIONS

Analyses were performed to show that the cracked ligaments in the TSPs in the IP2 steam generators are stable and will not become free during a steam line break or feed line break combined with an earthquake. The load acting on the "star" section due to the differential pressure experienced during a steam line break and seismic event applies far less load to the star than the loads that are restraining the star. Parametric studies with up to two adjacent stars missing and with no initial compressive preload indicate that the conclusion will not change with changing conditions.

A section of the TSP may come free at a location near the flow slots. A section becoming free is considered unlikely, since they have not come free during many years of normal operation and the hour-glassing conditions are not changing. If they do become free during normal operation or during an accident condition, the first row of tubes that are plugged will protect the active tubes. Thirteen Row 3 tubes near the location of an investigatory removal of a section of the TSP are recommended to be plugged to protect the active tubes in the instance that a section of the TSP becomes free. Ten other Row 2 tubes are recommended to be plugged near the ends of flow slots deformed by hourglassing.

7.0 REFERENCES

1. Investigation of Samples Received from Indian Point Unit No. 2 Steam Generator, Battelle Columbus Report, July 13, 1979.

2. Steam Generator Tube Integrity, Draft Regulatory Guide x.xx, November, 1996.

3. "Evaluation of Effect of Tube Dents on Steam Generator Tubes and Internals When Subjected to SLB, FLB, and LOCA, Combined with SSE Conditions," Westinghouse Electric Corporation, Nuclear Equipment Divisions, WTD-SM-75-107, December, 1975.

4. Steam Generator Support Plate Analysis for Indian Point Unit 2, Failure Analysis Associates Report FAA-79-01-3, January, 1979.

5. Indian Point Unit 2, Nuclear Steam Generator Status Report, Addendum 11, April, 1996, Internal Con Edison Report

6. Westinghouse Steam Generator Primary Services Field Service Report, IPP-28, February 27, 1995 through April 19, 1995.

Question 7

Provide your plans in response to the staff's suggestion that you perform a helium leak test.

Reply

Con Edison evaluated the NRC's recommendation to perform a helium leak test, and has decided not to utilize this method to detect steam generator primary to secondary leakage. Helium, due to its small atomic size, is very effective in its ability to leak through the smallest of tube defects. However, for the same reason helium is able to diffuse through mechanical boundaries that are otherwise impervious to water. The following factors were considered in our decision regarding pressure leak testing.

The primary consideration of the helium leak test is the components to which the test will be subjected. Such a test is useful for components that are constructed leak tight. Although the Indian Point 2 steam generators were originally constructed as leak-tight, repairs to the tubes have relied upon mechanical plugs and plug repair devices, which utilize metal to metal sealing joints. Mechanical plugs with their extensive metal interface are essentially leak-tight to water, but may not be so to helium. Plug repair devices, designated as PIPs or PAPs, possess a smaller sealing surface than plugs and are therefore qualified as leak limiting joints. There are 238 PIPs and PAPs installed in plugs at Indian Point 2. Helium leakage through these devices would render the results of a helium leak test difficult to interpret, and thus of limited usefulness.

Based upon industry's experience, other considerations do not support the utilization of a helium leak test. Use of helium as a pressure test medium is not a widely used or accepted practice for testing steam generator tube bundles. In the few cases where helium leak testing was performed, the application of the test was complex and the results were difficult to interpret. Leakage from helium often contaminates broad regions of the tubesheet, making it difficult to isolate the leak to a given tube. In one case at D.C. Cook, a group of tubes were plugged even though it was believed that only one tube was actually leaking. Consequently, helium leak testing of steam generators is seldom performed.

Helium leak testing is typically conducted at a pressure of about 200 psig, while the planned water leak test is performed at 750 psig. The increased water test pressure provides some compensation for the reduction in leak sensitivity that water exhibits compared to helium. Use of water as a pressure leak test medium has furthermore been demonstrated to be effective and technically acceptable across a broad range of industries and components. Water leakage is also very simple to visibly identify with remote cameras in the steam generator bowls.

Based on the foregoing considerations, Con Edison will perform a steam generator secondary side pressure test using water as the test medium instead of helium.

Question 17

Identify how many tubes are affected by the "pilgering" type noise at the top of the tube sheet (TTS) and explain how you plan to disposition these tubes.

Reply

During a recent visit to the site in the Spring of 2000, the NRC observed that bobbin coil data for one tube in the sample had excessive horizontal noise in the sludge pile region. The NRC questioned whether this noise level could present a challenge to data analysts. It was requested that an estimate of the number of tubes similarly affected be determined based upon a limited sample of the data, and that an assessment of the presence of this noise as it affects the detection of indications in the sludge pile be performed.

Data analysts commonly refer to this type of horizontal noise as "pilgering" or "mandrel chatter." This occurs as a result of the tube drawing or forming process. Generally, this condition is reported as "ID Variations" (IDV). IDV is present at Indian Point 2 as in most other first generation steam generators, and is not believed to increase the susceptibility of any known tube degradation mechanisms. (The attached graphic of Steam Generator 21, Row 20, Column 18 illustrates the IDV.)

Our estimate involved selecting bobbin calibration groups (year 2000 data) randomly in each steam generator, and screening all of the data in the selected calibration group in all areas to detect IDV. Of the 583 tubes inspected in the four steam generators, 8 were observed to have IDV. This represents 1.4 percent of the sample, and if applied to the inservice tube population of 11,715 tubes, would equate to 165 tubes having IDV. The Westinghouse Lead Level III Eddy Current Supervisor, estimates that the IDV population at the Indian Point 2 is about average, as compared to other plants. The amplitude of the IDV ranged from approximately 1.5 to 4 volts.

In order to evaluate industry's experience with IDV, Con Edison contacted Palo Verde's eddy current Level III and asked about Palo Verde's experience. He indicated that some of Palo Verde's tubing had IDV. Palo Verde characterized their tubing noise as being very regular (i.e., evenly spaced and constant in amplitude), whose signals lay uniformly in the horizontal plane. He estimated their tubing to have a signal to noise ratio of approximately 2.5:1 to 3:1 due to IDV. This is consistent with the IDV present in the Indian Point 2 steam generators. Palo Verde has not plugged any tubes due to IDV.

In 1997, Palo Verde experienced a row 1 tube leak which was characterized as PWSCC U-bend cracking. During the subsequent investigation of the leak, INPO raised the IDV concern, speculating that it could have contributed to the flaw being misinterpreted during previous inspections. (IDV and PWSCC signals lay in the general horizontal plane; IDV could mask small PWSCC signals.) Subsequently, it was concluded that IDV had not interfered with signal interpretation, and was not a factor in the misinterpretation of the flaw signal.

Based upon our evaluations, we have concluded that IDV in the sludge pile region may slightly degrade the detection of PWSCC flaws in the sludge pile environment; however, we believe that the flaws of most significant concern originate from the outside diameter of the tubing at this location. These signals would be IGA, pitting and ODSCC axial signals. Since these signals would be more in the vertical plane than PWSCC, the effect of IDV would be lessened. Both

Westinghouse and the Electric Power Research Institute's Manager of Non-Destructive Testing have indicated that they were unaware of any tubes being plugged in the industry due solely to IDV. Based upon the above, Con Edison does not plan to plug tubes having IDV since we believe IDV is an imperfection which has been proven to be able to be inspected throughout the industry. Thus, IDV should only be evaluated based upon its influence on flaw detection capabilities.

Steam Generator IDV Inspection Sample

				ID Variations Noted (Row/Col)
1.	Steam Generator 21			
		Cal # 140	10 tubes	
		Cal # 57	56 tubes	20/17, 20/18, 20/19
		Cal # 147	104 tubes	5/75, 6/79, 6/82, 8/76
		Total Insp:	170 tubes	
2.	Steam Generator 22			
		Cal # 65	70 tubes	
		Cal # 91	7 tubes	
		Cal # 107	48 tubes	
		Total Insp:	125 tubes	
3.	Steam Generator 23			
		Cal # 7	10 tubes	36/49 small amplitude
		Cal # 39	44 tubes	
		Cal # 83	100 tubes	
		Total Insp:	154 tubes	
4.	Steam Generator 24			
		Cal # 27	21 tubes	
		Cal # 61	65 tubes	
		Cal # 99	48 tubes	
		Total Insp:	134 tubes	
		Grand total:	583 tubes	Total ID Variations = 8

INDIAN POINT____ 03/02/00 INLET UNIT: 2 SG: 21 REEL: 57 PRI

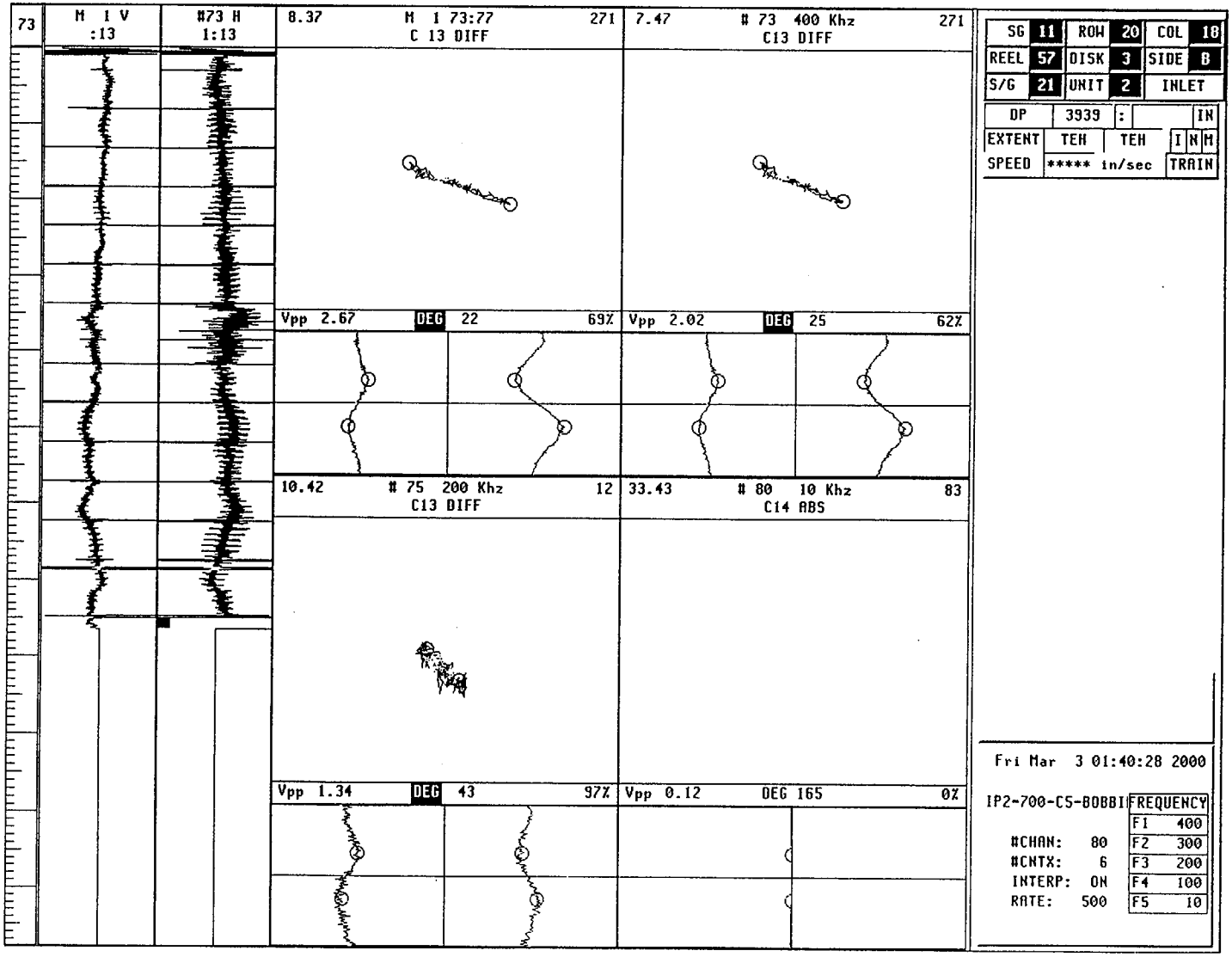

EC247 03/17/00 11:45:15