Northern States Power Company

Monticello Nuclear Generating Plant
2807 West County Road 75
Monticello, MN 55362

NSP

April 14, 2000

10 CFR Part 50
Section 50.55a(g)

US Nuclear Regulatory Commission
Attn: Document Control Desk
Washington, DC 20555

MONTICELLO NUCLEAR GENERATING PLANT
Docket No. 50-263 License No. DPR-22

Revision No. 3 to the Monticello Inservice Inspection Plan

Attached for your filing is the most recent revision of our document titled, "Inservice Inspection Examination Plan, Revision 3, Third Interval, June 1, 1992 through May 31, 2002". The Inservice Inspection (ISI) Plan conforms to Section XI of the 1986 edition of the ASME Code with eight approved Requests for Relief. This revision will govern the conduct of the ISI program over the remainder of the Third Ten Year Interval of operation of the Monticello Nuclear Generating Plant from June 1, 1992 through May 31, 2002.

The revised plan incorporates ISI boundary changes and additional inspection items as a result of Monticello's power re-rate. Primary containment temperature increases above 200°F due to power re-rate necessitated additional inspection of Class 2 pipe previously exempted based on ASME 1986 Section XI IWC-1222 (d).

The ISI Plan has been provided in its entirety. All pages of the previous version of the ISI Plan that you have on file may be discarded.

This letter contains no new NRC commitments, nor does it modify any prior commitments.

Please contact Sam Shirey, Sr. Licensing Engineer, at (612) 295-1449 if you have any question related to our Inservice Inspection plan or the Requests for Relief included in the plan.

Byron D. Day

Byron D. Day
Plant Manager
Monticello Nuclear Generating Plant

cc: Regional Administrator - III, NRC

A047

4/13/00 SIS J:\LICENSE\Topicals\I.S.I\ISI-SUB1.RV3.doc

NRR Project Manager, NRC
Sr. Resident Inspector, NRC
State of Minnesota Boiler Inspector
Hartford Insurance
J Silberg (w/o attachments)

Attachment: Inservice Inspection Examination Plan, Revision 3, Third Interval, June 1, 1992 through May 31, 2002

NSP

Monticello Nuclear Generating Plant - Unit 1

ASME Section XI Inservice Inspection Plan

Third Ten Year Interval, Revision 3
June 1, 1992 through May 31, 2002

03-22-2000

#6

NORTHERN STATES POWER COMPANY
414 NICOLLET MALL
MINNEAPOLIS, MN 55401

MONTICELLO NUCLEAR GENERATING PLANT
2807 WEST HIGHWAY 75
MONTICELLO, MINNESOTA 55362

INSERVICE INSPECTION
EXAMINATION PLAN
REVISION 3

THIRD INTERVAL
JUNE 1, 1992 THROUGH MAY 31, 2002

Prepared By: Daniel S. Whitcomb
Daniel S. Whitcomb

Reviewed By: Lalit Khosla 4/5/2000
Lee Khosla

Approved By: J Ricker
Jeff Ricker

Date: 5 April 2000

RECORD OF REVISIONS

Page	Rev.
Review and Approval	3
i	3
1.1-1	1
1.2-1 through 1.2-2	3
1.3-1 and 1.3-2	3
1.4-1 through 1.4-7	3
1.4-8 through 1.4-14	3
1.5-1 and 1.5-2	3
1.5-3 through 1.5-5	3
1.5-6 and 1.5-7	3
1.5-8 through 1.5-18	3
1.5-19 and 1.5-20	3
1.5-21 through 1.5-27	3
1.6-1 through 1.6-3	3
1.7-1 through 1.7-3	3
Inspection Schedule	3 (3/22/2000)

TABLE OF CONTENTS

Page

Record of Revisions i

Table of Contents 1.1-1

Introduction 1.2-1

Source Documents 1.3-1

Requests for Relief 1.4-1

ISI Boundary Drawings 1.5-1

ISI Isometric Drawings 1.6-1

Inspection Plan and Schedule Tables (Pages 1-269) 1.7-1

INTRODUCTION

The ASME Code Section XI Inservice Inspection (ISI) Program is prepared and maintained by the Materials and Special Processes Section of Northern States Power Company's Power Generation Division. The ASME Codes Section XI Inservice Testing (IST) Program is prepared and maintained by the Monticello Plant Staff; the IST program has been submitted under separate cover.

The Monticello Third Ten Year Inservice Inspection Interval is from June 1, 1992 to May 31, 2002. Six refueling and maintenance outages are scheduled in this time frame. Components within the examination plan (Program Schedule B) have been selected using criteria in the 1986 Edition of the ASME Code, Section XI. The 1974 Edition, Summer 1975 Addenda to the Code is used to determine the extent of examination of Class I welds as allowed by 10CFR50.55a(b)(2)(ii). The 10CFR50.55a(g)(6)(ii)(A) (57FR34666), Augmented Examination of Reactor Vessel have been identified.
The code editions implemented can be summarized as follows:

Class 1 (Quality Group A)	86 Section XI (extent of exam - 74S75 Section XI) 89 Section XI as required by 10CFR50.55a(g)(6)(ii)(A) 89 Section XI Addenda 1990 as required by Relief Request No. 7 "Leakage at Bolted CRD Housing Connections".
Class 2 (Quality Group B)	86 Section XI
Class 3 (Quality Group C)	86 Section XI
NF (Hangers)	86 Section XI
MC (Metal Containment)	92 Section XI & 92 Addenda, IWE

The examination plan and schedule was developed from ASME Code requirements, individual component examination history and plant scheduling needs such as optimizing insulation removal and scaffolding needs. During the second interval, a substantial number of component replacements and alterations were made (e.g. the recirculation piping replacement). The intent of the third interval scheduling was to be consistent with the second interval, subject to allowing meaningful accumulation of service time for new components.

Examination of Class 1 and Class 2 components will be in accordance with requirements listed in Table IWB-2500-1 and Table IWC-2500-1, respectively, of the Code, 1986 Edition, and 10CFR50.55a(g)(6)(ii)(A)(57FR34666), except where relief has been requested. Relief Request No. 7 Rev. 1, approved by NRC Ltr. dated 10/18/94, states that CRD Bolting will be inspected in accordance with 1989 Section XI Addenda 1990.

Class 1, Class 2 and Class 3 hangers have been identified in accordance with IWB, IWC and IWD, respectively. Hanger examination will be completed in accordance with ASME Section XI, Subsection IWF. Integral attachments will be examined in accordance with the appropriate section of the Code.

Inservice inspection examinations are performed by qualified and certified personnel using procedures written to the 1986 Edition of the Code.

The Section XI Repair and Replacement Program, System Pressure Tests and Snubber Functional Tests are administered by the Monticello Plant Staff. Activities under the Repair and Replacement Program, System Pressure Tests and Snubber Functional Tests are reported in the "Inservice Inspection Summary Report" following each refueling outage.

The ASME Section XI Inservice Inspection Program is in six parts: Introduction, Source Documents, Requests for Relief, ISI Boundary Drawings, ISI Isometric Drawings, and a table containing the Inservice Inspection Examination Plan and Schedule. The ISI Boundary Drawings outline Quality Group Classifications, A, B and C. The ISI Isometric Drawings delineate ASME Section XI components or items that are included in the program.

The Inservice Inspection Examination Plan and Schedule lists the ASME Section XI components by isometric drawing number, system, item and item description. The examination plan and schedule identify the ASME Section XI Item Number listed in Tables IWB-2500-1, IWC-2500-1,IWD-2500-1 and Subsection IWF, thus identifying the examination method. The examination schedule lists the anticipated year for the examination of a given component. The examination schedule is intended to be flexible to allow for deviations in outage length and outage work scope. Therefore, the schedule may be changed, as allowable by the Code, without further notification

The examination plan and schedule contains certain non-code items to be examined or examinations beyond Section XI Code requirements. These augmented items include licensee initiated examinations on NC-7879-6/Tank and NC-ISI-37/W-1, W-2, W-3, W-4, W-12, W-12A shown in the plan and schedule. These items will be examined in accordance with the Section XI Code to the extent practical. Relief requests will not be submitted for these non-code exams if Section XI Code requirements can not be met. Non-code exams are also subject to change without prior notification to the NRC.

Containment inspection will be in accordance with requirements listed in Table IWE 2500-1 respectively of the Section XI Code, 1992 Edition with 92 Addenda

except where relief has been requested. The ISI examination schedules submitted with this plan do include IWE items, however the containment inservice inspection program is not submitted as part of this ISI plan as allowed by 10CFR55a(g)(6)(ii)(B)(5). The containment inspection program will be maintained and available for audit after 9 September 2001.

Monticello was built prior to the implementation of Section XI Access Requirements. As a result, some components that require examination may not be completely accessible.

SOURCE DOCUMENTS

10CFR50.55a (53FR16051)

1974 Summer 75 B&PV Code Section XI

1986 B&PV Code Section XI

1989 B&PV Code Section XI addenda 1990.

1992 B&PV Code Section XI, Subsection IWE

Monticello Technical Specification 3.15/4.15

10CFR-50.55a(g)(6)(ii)(A)(57FR34666) "Augmented Examination of Reactor Vessel IN-96-36." (M96024A).

NUREG 0619 (BWR FW and CRDRL Nozzle Cracking NRC commitments(M810223A, M81024A, M81025A M81026A, M89116A, M89117A, M89118A, M89119A, M900095A, M90096A)

USIA-10	NSP Letter 11/3/81	VT Feedwater Sparger
	NSP Letter 5/9/83	CRD Return Line

NUREG/CR 3052 (Jet Pump Beam UT (M89114A))

Generic Letter 88-01 & NUREG 0313, Rev 2 (IGSCC (M88080A, M88082A)
Note: All Monticello welds meet NUREG-0313, Rev. 2.

Regulatory Guide 1.150, Rev. 1 & Generic Letter 83-15

Regulatory Guide 1.147, Rev. 12 dated May.1999-All Code cases accepted, following listed code cases are used at Monticello .

Code Case N-307-1	Revised Ultrasonic Examination Volume for Class I Bolting, Table IWB-2500-1, Examination Category B-G-1, When the Examinations are Conducted from the Center Drilled Hole
Code Case N-416-1	Alternate Rules for Hydrostatic Testing of Repair or Replacement of Class 2 Piping,

	Section XI, Division 1 (Note: This revision of N-416 does not conflict with Code Case N-498)
Code Case N-435-1	Alternative Examination Requirements for Vessels With Wall Thickness 2 in. or Less, Section XI, Division 1
Code Case N-460	Alternative Examination Coverage for Class I and Class 2 Welds, Section XI, Division I
Code Case N-461	Alternative Rules for Piping Calibration Block Thickness, Section XI, Division I, with additional requirements
Code Case N-491	Alternative Rules for Examination of Class 1, 2, 3, and MC Component Supports of Light-Water Cooled Power Plants. Section XI, Division 1
Code Case N-498	Alternate Rules for 10-Year System Hydrostatic Testing for Class 1 and 2 Systems, Section XI, Division 1
Code Case N-524	"Alternative Examination Requirements for Longitudinal Welds in Class 1 and 2, Piping"

LER 89-021 "Crack on Jet Pump Riser Brace Due to Fatique." (M94031A).

LER 97-010 "Failure to Include Supports on Reactor Head Vent" (M97054A)

LER 97-004 "Failure to Submit Relief Request for Limited Inservice Inspection Examination" (M97024A, M97025A).

NUTECH Report - NSP-56-121-6, Rev. 0

IEB 80-13 Cracking in Core Spray Spargers

NRC Generic Letter 87-11 "Relaxation in Arbitrary Intermediate Pipe Rupture Requirements."

NRC Generic Letter 94-003 "Intergranular Stress Corrosion Cracking of Core Shrouds in BWR's."

NRC Bulletin 79-14 "Seismic Analysis for As-Build Safety Related Piping Systems".

NRC IR263/89022-01 "Notice of Violation" (M89147A, M89148A, M89149A, M89150A)

NRC IR 263/96006 "Notice of Violation" (M96025A)

NRC Ltr. 10/18/93 "Request for Additional Information on MNGP 3rd 10 Year Interval ISI Program Plan (TAC M82545)

NRC Ltr. 7/01/94 "MNGP Request for Relief from ASME BPV Code Section XI, Reactor Coolant Pressure Boundary, Post Repair Hydrostatic Test(TAC M89501).

NRC Ltr. 10/24/94 "Evaluation of 3rd 10 Year ISI Plan and Associated Reliefs. (TAC M82545).

NRC Ltr. 11/2/94 "MNGP –Approval of Code Case N-416-1 as alternative to required Hydrostatic Pressure Test: (TAC M90561)

NRC Ltr. 11-19-97 "Request for Relief No.8 of 3rd 10 year ISI Plan.(TAC No. 96255). (M97030A).

NRC Ltr. 12-28-98 "MNGP –Evaluation of Relief Request No.9 (for the 3rd 10 Year ISI Program Plan. (TAC No. 97488).

NRC Ltr. 8-4-99 " MNGP-Evaluation of Relief Request No. 10 (for the 3rd 10 Year ISI Program Plan(TAC No, MA3397)

NSP Ltr. 12/20/93 "Response to Request for Additional information Concerning the MNGP 3rd 10 Year ISI Program (TAC M82545)

NSP Ltr. 10/02/94 "Request for authorization to utilize ASME BPV Code Case N-416-1."

NSP Ltr. 9/19/96 "Reply to Notice of Violation contained in NRC Inspection Report No. 50-263/96006."

MNGP Condition Report 96002217 "Assurance of Equipment operability and containment integrity during DBA conditions-IN96-49."

Requests for Relief

Relief Request No.	Description	Rev.
2	Reactor Vessel Stabilizer Brackets	1
3	Reactor Recirc. Pump	1
4	Valve Internal Surfaces	1
5	Reactor Vessel Nozzles N-13 & N-14	1
7	Leakage at Bolted Connections	1
8	Use of Existing Calibration Blocks	0
9	Use of High Alloy/High Nickel Calibration Block for Dissimilar metal Weld	0
10	Limited Examinations	0

ISI Relief Request No. 2 (Rev. 1)

Reactor Vessel Stabilizer Brackets

SYSTEM: Reactor Vessel

Class: 1

Category: B-H

Item: B 8.10

Impractical Examination Requirements:

Perform a volumetric or surface examination of 100% of the vessel stabilizer bracket to vessel welds.

Basis for Relief:

The vessel stabilizer brackets are surrounded by non-removable insulation, ventilation ductwork and electrical installations.

The stabilizer brackets do not provide support during normal operation. The brackets stabilize the vessel against local and seismic loads.

Alternate Examination:

The stabilizer brackets will be examined, if local or seismic loads are experienced.

Reference: Relief Request No. 51 - Second Ten Year Interval dated June 30, 1981; NRC SER dated November 29, 1990.

Approval Status:

Approved 10/18/94. Submitted with Examination Plan, Rev. 0.

ISI Relief Request No. 3 (Rev. 1)

Reactor Recirculation Pump

SYSTEM: Reactor Recirculation

Class: 1

Category: B-L-2

Item: B 12.20

Impractical Examination Requirements:

Perform a visual examination of the internal surfaces of one reactor recirculation pump.

Basis for Relief:

Inspection of a reactor recirculation pump internal surface requires disassembly of the pump. Disassembly of a pump results in a large amount of personal radiation exposure. Disassembly of the pump may result in damage to the pump.

Alternate Examination:

The internal surface of a reactor recirculation pump will be visually examined if a pump is disassembled for maintenance.

If a recirculation pump is not disassembled for maintenance in the third ten year interval, this will be reported at the end of the interval.

Reference: Relief Request No. 41 - Second Ten Year Interval dated June 30, 1981; NRC SERs dated November 29, 1990 and June 15, 1992.

Approval Status:

Approved 10/18/94. Submitted with Examination Plan, Rev 0.

ISI Relief Request No. 4 (Rev. 1)

Valve Internal Surfaces

SYSTEM: Various

Class: 1

Category: B-M-2

Item: B 12.50

Impractical Examination Requirements:

Perform a visual examination of the internal surfaces of Class 1 valves.

Basis for Relief:

Inspection of the internal surfaces of Class 1 valves requires disassembly of the valves. Disassembly of these valves results in a large amount of personal radiation exposure. Disassembly of the valves may result in damage to the valves.

Alternate Examination:

The Class 1 valve internal surfaces will be visually examined if the valve is disassembled for maintenance.

If the valves are not disassembled for maintenance in the third ten year interval, this will be reported at the end of the interval.

Reference: Relief Request No. 42 - Second Ten Year Interval dated June 30, 1981; NRC SERs dated November 29, 1990 and June 15, 1992.

Approval Status:

Approved 10/18/94. Submitted with Examination Plan, Rev 0.

ISI Relief Request No. 5 (Rev. 1)

Reactor Vessel Nozzles N-13 & N-14

SYSTEM: Reactor Vessel

Class: 1

Category: B-E

Item: B 4.12

Impractical Examination Requirements:

Perform a visual examination of the external surface to the reactor pressure vessel partial penetration nozzle welds for Nozzle N-13 and N-14 (Closure head flange leakage sensor).

Basis for Relief:

These nozzles do not see pressure during the vessel pressure test; unless the vessel flange o-ring leaks. Leakage past the o-ring is detected by the reactor vessel head-seal leak detection system. Therefore, a visual examination for leaks during the vessel pressure test will not detect leaks because the nozzles are not pressurized.

Pressurizing the nozzle in the wrong direction to perform a leak test will damage the vessel flange o-ring.

The nozzles are not accessible without damaging area insulation.

Alternate Examination:

No examination are proposed unless the insulation is removed for maintenance or other activities.

References: Relief Request No. 18 - Second Ten Year Interval, dated June 30, 1981; NRC SER dated November 29, 1990.

Approval Status:

Approved 10/18/94. Submitted with Examination Plan, Rev. 0.

ISI Relief Request No. 7 (Rev. 2)
(Page 1 of 4)

Leakage at Bolted CRD Housing Connections

SYSTEM: Bolted CRD Housing Bolted Joint Class: 1

Category: N/A Item: N/A

Impractical Examination Requirements:

IWA-5250(a)(2): If leakage occurs at a bolted connection, the bolting shall be removed and VT-3 examined.

Basis for Relief:
10 CFR Part 50, Section 50.55a(a)(3), which states,(in part);

"Proposed alternatives to the requirements of paragraphs (c), (d),(e),(f),(g), and (h) of this section or portions thereof may be used when...

(ii) Compliance with the specified requirements of this section would result in hardship or unusual difficulty with out a compensating increase in the level of quality and safety."

The CRD (Control Rod Drive) housings are flanged connections beneath the reactor vessel that are used to secure the 121 CRD mechanisms in position below the vessel. Each of the 121 CRD to CRD housing bolted joints utilizes eight bolts, washers, and nuts to hold the CRD mechanism in position. The joint also utilizes three hollow metal O-rings to provide a water tight seal capable of withstanding full reactor pressure at normal operating temperatures.

The CRD housing joints are VT-2 examined as part of the periodic reactor pressure vessel Leakage and Hydrostatic pressure tests. These tests are conducted with the vessel temperature much less than the design operating temperature. For a typical test, the vessel temperature would be <212°F, as compared to a normal operating temperature of about 540°F. It is not unusual for these bolted joints to leak slightly during periodic reactor vessel pressure tests conducted at test temperatures below normal operating temperature. This is a condition identified in the original design of the connection by the Architect/Engineer, General Electric (GE). GE developed guidance to permit

ISI Relief Request No. 7 (Rev. 2)
(Page 2 of 4)

evaluation of a leaking CRD housing bolted connection over a period of time, while at test pressure, to determine whether the leak will stop once the vessel heats up to normal operating pressure. This leakage evaluation criteria is incorporated into the VT-2 tests for these joints.

Compliance with Code Requirement IWA-5250(a)(2) represents a hardship (burden) in the case of the CRD housing bolted joints because:

1) Examining the bolting would involve the accumulation of considerable personnel radiation exposure, since the work must be performed in a relatively high dose rate area inside the drywell, immediately below the reactor vessel. Typical shutdown dose rates in the vicinity of the bolting flanges would be on the order of 50 to 100 mr/hr.
2) Since the reactor pressure vessel test is critical path item, the additional time needed to depressurize the vessel, remove the bolting, perform the exam, and then re-pressurize the vessel to retest the joint would delay plant startup from an outage by an equivalent amount of time . The cost of such delays is significant, since it is estimated that the cost of extending the duration of an outage is $379,000 per day (including replacement power costs).

Compliance with Code requirement IWA-5250(a)(2) would not result in a compensating increase in quality or safety because:

1) CRD Housing joint leakage during (relatively) low temperature testing is not unexpected due to the design of the bolted joint. This joint is unusual in that it has hollow metal o-rings that require the CRD housing bolts to be tightened within a specific torque range in order to function properly at normal operating temperature. Thus, the bolts cannot simply be tightened to stop leakage as might be done for a conventional gasketed joint.
2) As noted previously, GE developed guidance to evaluate any CRD housing leakage to determine if the leakage will persist at normal operating temperature/pressure and should therefore be corrected. Leakage that is found to be acceptable per the guidance is not considered adverse to quality or safety and need not be corrected before startup. This type of analysis is consistent with Section XI

ISI Relief Request No. 7 (Rev. 2)
(Page 3 of 4)

3) Code paragraph IWB-3142, which allows analysis of the leakage for acceptability Performance of the VT-3 bolting examination does not represent a corrective action for the joint leakage and will not reduce the likelihood of joint leakage upon retest. Therefore, the VT-3 bolting examination does not contribute to increased quality or safety.

4) The bolts in the CRD housing connection are periodically examined when the joint is disassembled, per table IWB-2500-1, Item B7.80. Four of the eight bolts on each housing joint were replaced with new bolts in 1991. It was also reported in General Electric SIL 483 that only three uniformly distributed housing bolts are required to support the CRD mechanism. These factors provide a high degree of confidence in the long term safety and integrity of the CRD housing joints.

Earlier Section XI code editions invoked by Monticello's first and second ten year inspection interval programs did not include the subject examination requirement. A subsequent code revision which has been approved for use by the NRC, the 1990 Addenda to the 1989 Edition, limits the exam required to one bolt nearest the leak. Current Code committee activities include an effort to write a code case that limits this examination even further to specific joints and materials. All of these changes support the conclusion that this code requirement, as written, is overly restrictive and represents a hardship without a compensating increase in the level of quality or safety.

ISI Relief Request No. 7 (Rev. 2)
(Page 4 of 4)

Leakage at bolted Connections

Alternate Examination:
Any leakage found at a CRD housing bolted joint during a periodic pressure test performed at a temperature much less than operating temperature will be evaluated to determine whether it will stop leaking at operating temperature. If this evaluation shows the leak will stop as temperature increases to normal operating temperature, no further action will be taken. The acceptance criteria will be based on guidance provided by General Electric and will be included in the VT-2 tests for the joint (Note: This criteria has been submitted for NRC review). If the leak is determined to be unacceptable and the joint is disassembled to correct the leak, one of the bolts will be VT-3 examined in accordance with the 1990 Addenda requirement.

Approval Status:

Approved 10/18/94. NRC LTR: Evaluation of Third 10 Year Interval ISI Plan.

ISI Relief Request No. 8 (Rev. 0)
(Page 1 of 3)

Use of Existing Calibration Blocks

SYSTEM: Various

Class: 1 and 2

Category:	Item:
B-A	B 1.21, B 1.22, B 1.30, B 1.40
B-D	B 3.90, B 3.100
B-F	B 5.10, B 5.130
B-J	B 9.11, B 9.12, B 9.31
C-A	C 1.10, C 1.20
C-F-1	C 5.11, C 5.12
C-F-2	C 5.51, C 5.52

Examination Requirements:

IWA-2232(a) of ASME Section XI states that:

> "Ultrasonic examination of vessel welds greater than 2 inches thick shall be conducted in accordance with Article 4 of Section V, amended as follows."

Section V, Article 4, T-441.1.2 outlines the material specification requirements for calibration blocks. T-441.1.2.1 requires calibration blocks to be fabricated from one of the following: (a) nozzle drop out from the component; (b) a component prolongation, or; (c) material from the same material specification, product form, and heat treatment as one of the materials being joined.

IWA-2231(b) states that:

> "Ultrasonic examination of piping systems shall be conducted in accordance with ASME Section XI, Appendix III."

Appendix III, III-3411 which outlines the material specification requirements for calibration blocks requires that:

"(a) The calibration blocks for similar metal welds shall be fabricated from one of the same materials specified for the piping being joined by the weld; (b) Calibration blocks for dissimilar metal welds to be fabricated from the material specified for the side of the weld from which the examination will be conducted.

ISI Relief Request No. 8 (Rev. 0)
(Page 2 of 3)

Use of Existing Calibration Blocks

If the examination will be conducted from both sides, calibration reflectors shall be provided in both materials; (c) Where the examination is to be performed from only one side of the joint, the calibration block material shall be of the same specification as the material on that side of the joint. (d) If material of the same specification is not available, material of similar chemical analysis, tensile properties, and metallurgical structure may be used.

IWA-2232(d) states that:

> If the requirements of (a), (b), or (c) above are not applicable, the ultrasonic examination shall be conducted in accordance with the applicable requirements of Article 5 of Section V, amended as follows."

IWA-2232(d)(4)(a) states that:

> "The material from which the blocks are fabricated shall be: (1) a nozzle drop out from the component; (2) a component prolongation; or (3) material from the same material specification, product form, and heat treatment as one of the materials being joined. (b) For calibration blocks for dissimilar metal welds, the material selection shall be based on the material on the side of the weld from which the examination will be conducted. If the examination will be conducted from both sides, calibration reflectors shall be provided in both materials."

Examination Requirement Not Met

Several of the calibration blocks currently being used lack the documentation necessary to demonstrate compliance with the material specification requirements of Article 4 of Section V, Appendix III.

Several of the calibration blocks currently being used on pipe to fitting, or fitting to fitting joints where examination is performed from both sides of the joint, are fabricated to pipe material specifications.

ISI Relief Request No. 8 (Rev. 0)
(Page 3 of 3)

Use of Existing Calibration Blocks

Basis for Relief:

Documentation requirements existing at the time of fabrication did not require traceability to the material's chemical or physical certifications. Existing calibration blocks certification is verified through appropriate P-number grouping. The P-number grouping provides adequate assurance that the blocks will establish the proper ultrasonic calibration and sensitivity.

Proposed Alternative

Existing calibration blocks will be used as is. Any calibration blocks obtained in the future will be obtained with documentation to demonstrate compliance with the material specification requirements of ASME Code Section V Article 4 or Section XI, Appendix III, as applicable.

Justification for Granting Relief

It would be impractical to fabricate a new set of calibration blocks in order to satisfy the documentation requirements of the current Code. Existing records, indicate the appropriate P-number grouping, thereby providing adequate assurance that the blocks will establish the proper ultrasonic calibration and sensitivity.

Any new calibration block will be obtained with the documentation necessary to demonstrate compliance with the material specification requirements.

Time Period Relief is Requested For

Relief is requested for the Third Ten Year Interval.

Approval Status:

Approved 11/19/97. NRC Ltr. :Monticello Nuclear Generating Plant-Approval of Relief Request Number 8 of the third 10 Year Inservice Inspection Program (Tac. M96255).

ISI Relief Request No. 9 (Rev. 0)

Use of High Alloy/High Nickel Calibration Block for Dissimilar Metal Welds

SYSTEM: Various

Class: 1 & 2

Category: See Table 1

Item: See Table 1

Examination Requirements:

III-3411 (b) of ASME Section XI 1986 edition, Appendix III states:

> "Calibration blocks for dissimilar metal welds shall be fabricated from the material specified for the side of the weld from which the examination will be conducted. If the examination will be conducted from both sides, calibration reflectors shall be provided in both materials."

Proposed Alternative:

For examination of dissimilar metal welds conducted from both sides, the proposed calibration is to be based on a single block fabricated from the material specified for the high alloy/high nickel side of the weld. If indications other than geometry are noted on the carbon steel side, the scans will be repeated utilizing a calibration block of the same or of similar material (material of similar chemical analysis, tensile properties, and metallurgical structure).

Basis for Relief:

10 CFR 50, Section 50.55a(a)(3) states (in part):

"*Proposed alternatives to the requirements of paragraphs ... may be used when ...*
(i) The proposed alternatives would provide an acceptable level of quality and safety, ..."

Prior to the Winter 1985 revision of the code, paragraph III-3411 stated the following;

(a) *The calibration blocks shall be fabricated from one of the materials specified for the piping being joined by the weld.*

(b) *Where the examination is to be performed from only one side of the joint, the calibration block material shall be of the same specification as the material on that side of the joint.*

(c) If material of the same specification is not available, material of similar chemical analysis, tensile properties, and metallurgical structure may be used.

Since the third interval requires a change from the 77 Edition S78 Addenda to the 1986 edition of the Section XI code, a new requirement is imposed upon the plant. Compliance with this new requirement would require the plant to procure new calibration blocks for the carbon steel side of the dissimilar metal welds shown on Table 1.

Our existing calibration blocks have been procured for dissimilar metal examinations based on previous code requirements and opting for the conservative approach of using a block based on the high alloy/high nickel side of the weldment rather than the carbon side (see below).

The Monticello plant has determined that our existing calibration blocks along with a procedural requirement to scan at high sensitivity levels (if the material noise level in the component is not a minimum of 10% full scale height (FSH), the instrument gain is increased accordingly) and record all suspected flaw type indications regardless of amplitude, is a conservative and acceptable alternative method.

Justification for Granting Relief:

It is believed that the use of a single calibration standard for initial examination as noted above meets the requirements of 10 CFR Part 50, Section 50.55 (a) (3) to provide an acceptable level of quality or safety, or that compliance with the specified requirements would result in hardship or unusual difficulties without a compensating increase in the level of quality and safety.

The use of the high alloy/high nickel block for an examination performed from both sides of a dissimilar metal weld is considered appropriate for the following reasons;

a) The sensitivity established on a high alloy/high nickel block is generally equal to or greater than that which would be obtained on a carbon steel block. This provides a conservative reference sensitivity for examinations from the carbon steel side of the weldment.

b) The examination procedure requires the following;

"Scanning shall be performed at the following gain levels, as applicable:

- For angle beam examinations; a minimum of +6dB above Primary Reference (DAC) level. In addition, if the material noise level (Baseline Roll) in the component being examined is not a minimum of 10% FSH, the instrument gain shall be increased accordingly.
- For straight beam examination, +6dB above reference level."

"Any reflector suspected to be a flaw (i.e. crack) shall be evaluated and recorded, regardless of amplitude or size."

c) The velocity difference between high alloy/high nickel steels and carbon steels is minor and does not result in a significant angle variation.

d) The procedure requires reexamination using a calibration block of similar material if indications are noted that are not attributable to geometry. This ensures proper evaluation data is recorded.

e) Use of two separate calibrations for examination of a single component may result in greater radiation exposure to personnel due to increased time at the examination site required to perform separate setups and exams.

Time Period Relief is Requested For:

Relief is requested for the Third Ten Year Interval

Approval:

Approved 12/28/98 NRC Ltr.: Evaluation of Relief Request #9 for the Third 10 Year Interval Inservice Inspection Program (TAC M97488)

Table 1 - Dissimilar Welds

S/N	Iso	Item	Code	Matl 1	Matl 2	Config
995	13142-42-A	W-3	B9.11	A106 GR B	A182 TP347	Pipe to Pipe
996	13142-42-A	W-4	B9.11	A182 TP347	A106 GR B	Pipe to Pipe
1367	73880-A	W-2	B9.10	A240 304	A234 WPB	Pipe to El
423	13142-20-C	W-22	B9.11	A182 F304	A508 CL II	Flange to Noz
2388	FIG 1	W-9	B9.11	A508 CL II	A182 F304	Noz to Flange
2731	ISI-19	W-1	B5.20	B166	A336 CL F8	Noz to SE
2048	97005-B	W-18	B5.10	A182 F316	A508 CL II	SE to Noz
2034	97005-B	W-4	B5.10	A182 F316L	A508 CL II	SE to Noz
2062	97005-B	W-32	B5.10	A182 F316L	A508 CL II	SE to Noz
1964	97004-A	W-25	B9.10	A333 GR 6	A358 316L	Pipe to Pipe
1884	97003-A	W-25	B9.10	A333 GR 6	A358 316L	Pipe to Pipe
1906	97003-B	W-4	B9.10	A358 316L	A333 GR 6	Pipe to Pipe
2041	97005-B	W-11	B5.10	A182 F316L	A508 CL II	SE to Noz
2055	97005-B	W-25	B5.10	A182 F316L	A508 CL II	SE to Noz
2171	97006-B	W-32	B5.10	A182 F316L	A508 CL II	SE to Noz
2164	97006-B	W-25	B5.10	A182 F316L	A508 CL II	SE to Noz
2143	97006-B	W-4	B5.10	A182 F316L	A508 CL II	SE to Noz
2150	97006-B	W-11	B5.10	A182 F316L	A508 CL II	SE to Noz
2157	97006-B	W-18	B5.10	A182 F316L	A508 CL II	SE to Noz
1995	97005-A	W-1	B5.10	A508 CL II	A403 316W	Noz to SE
2102	97006-A	W-1	B5.10	A508 CL II	A403 316W	Noz to SE
2729	ISI-16	W-1	B5.10	A336 CL F8	A508 CL II	SE to Noz
2730	ISI-16	W-2	B5.10	A336 CL F8	A508 CL II	SE to Noz

ISI Relief Request No. 10
(Page 1 of 19)

Limited Examination

SYSTEM: Various
Category: Various

Class: 1 and 2
Item: Various

Impractical Examination Requirements:

ASME Section XI (1986 no addenda) Code requires examination of essentially 100% of weld length for in-service inspection (ISI) of components per Table IWB-2500-1, and IWC-2500-1. Reg. Guide 1.147 endorses Code Case N-460, "Alternative Examination Coverage for Class 1 and Class 2 Welds." This code case allows greater than 90% coverage of a weld to meet the "essentially 100%" requirement.

This relief request is submitted in accordance with a commitment (M97024A) made in NSP Letter to NRC dated: March 24, 1997 . Titled: LER 97-004 "Failure to Submit Relief Requests for Limited In-service Inspections Examinations".

This facility was designed and constructed with limited accessibility. Due to component configurations and/or physical barriers and interference, essentially 100% inspection coverage is not achievable on some ISI components items examined for the Third Ten Year Interval.

Basis for Relief:

The following 10 CFR 50.55a paragraphs apply to the in-service inspection of components in accordance with the ASME Section XI code:

50.55a(g)(1): For a boiling or pressurized water-cooled nuclear power facility whose construction permit was issued prior to January 1, 1971, components (including supports) must meet the requirements of paragraphs (g) (4) and (5) of this section to the extent practical.

50.55a(g)(4): Throughout the service life of a boiling or pressurized water-cooled nuclear power facility, components (including supports) which are classified as ASME Code Class 1, Class 2, and Class 3 must meet the requirements, except design and access provisions and pre-service examination requirements, set forth in Section XI of editions of the ASME Boiler and Pressure Vessel Code ... to the extent practical within the limitations of design, geometry and materials of construction of the components.

ISI Relief Request No. 10
(Page 2 of 19)

50.55a(g)(5)(iv): Where an examination requirement by the code or addenda is determined to be impractical by the licensee and is not included in the revised in-service inspection program as permitted by paragraph (g)(4) of this section, the basis for this determination must be demonstrated to the satisfaction of the Commission ...

Monticello was designed and constructed prior to development of ASME XI, therefore, plant and component design and layout for inspection coverage required by ASME Section XI Code in many cases, is not sufficient to permit satisfying the current code requirements. Inspection limitations are primarily due to obstructions and configuration interference.

Summary of the limited examinations are described below and also included in Table 1 attached.

Part A: **Category B-D**, "Full Penetration Welds of Nozzles in Vessels"

Reactor Vessel Nozzle N-2G NV: Coverage for nozzle/vessel weld is 51%.
Inspection limited due to nozzle configuration. (See Figure 1).

Reactor Vessel Nozzle N-2H NV: Coverage for nozzle/vessel weld is 47%.
Inspection limited due to two instrumentation attachments at bottom dead center and nozzle configuration. (See Figure 2).

Reactor Vessel Nozzle Inner Radius N-2H-IR: Coverage for the inner radius inspection is limited to 92% due to two instrument attachments at bottom dead center. (See Figure 3).

Reactor Vessel Nozzle N-3C NV: Coverage for nozzle/vessel weld is 51% inspection limited due to nozzle configuration. (See Figure 4).

Reactor Vessel Nozzle N-4B NV: Coverage for nozzle/vessel weld is 51%.
Inspection limited due to nozzle configuration and welded instrument attachments at 16" CW limits all scans. (See Figure 5).

Reactor Vessel Nozzle Inner Radius N-4B-IR: Coverage for the inner radius inspection is limited to 98%, due to instrumentation attachments located 6" from blend radius and 24" CW from TDC. (See Figure 6).

ISI Relief Request No. 10
(Page 3 of 19)

Reactor Vessel Nozzle N-7 NV: Coverage for nozzle /vessel weld is 89% limitation due to nozzle configuration. (See Figure 7).

Part B: **Category B-J**, "Pressure Retaining Welds in Piping".

RHR Return A weld W-10: Volumetric examination limited to 43% . Limitation due to weld orientation and pipe configuration. (See Figure 8).

RHR Return A weld W-11: Volumetric examination limited to 50%. Limitation due to configuration of flange and weldolet. (See Figure 9).

RHR Return B weld W-6: Volumetric examination limited to 88 %. Limitation due to proximity of structural beam. (See Figure 10).

Recirc. Manifold B weld W-13 LS U&D: Volumetric examination limited to 50% of long seam weld. Examination limited to only six inches of downstream long seam weld due to support interference . (See Figure 11).

Part C: **Category B-G-1**, "Pressure Retaining Bolting, Greater than 2 in. in Diameter."

Reactor Vessel Closure head nuts: Surface examination limited to 57%. Limitation is due to threading. (See Figure 12).

Reactor Vessel Ligament Threads in Flange: Volumetric examination limited to 96%. Limitation is due to seal ring groove on reactor flange. (See Figure 13).

Part D: **Category C-C**, "Integral Attachments for Vessels, Piping, Pumps, and Valves".

CRD Scram Header B hanger attachment H-7: Surface examination limited to 0%. Limitation due to restraint configuration. (See Figure 14).

ISI Relief Request No. 10
(Page 4 of 19)

RHR Discharge B, Double Spring 4 lugs H-9: Surface examination limited to 85%. Limitation due to stabilizing lug welded to clamp prohibits examination of one end of weld. (See Figure 15)

Part E: **Category C-F-2**, "Pressure Retaining Welds in Carbon Steel or Low Alloy Steel Piping,"

HPCI Steam Discharge Weld W-29: Volumetric and Surface examination limited to 80% and 58%. Limitations due to restraint with fillet weld on weld crown and downstream area of weld.(See Figure 16).

Additional Means of Establishing Integrity:

In addition, hydrostatic tests are performed during regular inspection intervals to ensure the piping system is capable of maintaining pressure integrity. System integrity is monitored continuously during normal operation by routine operator rounds during shift and remote monitoring methods, e.g., containment radiation monitoring, containment air monitoring, containment leakage detection and monitoring, containment temperature monitoring, etc.

Alternate Examination:

The nature of the limitations have been noted on the ISI examination reports and are included in the ISI Outage Summary Report. NSP will continue to document the limitations.

All in-service inspection at Monticello has been done to the greatest extent practical. When limitations to required inspections are encountered Materials &Special Process procedure ISI-LTS-1 is applied, which requires alternative examination techniques to be considered, or applied to gain the maximum obtainable inspection coverage practical. In all of the above items identified this procedure was used and the maximum practical inspection coverage was achieved.

The Reactor Vessel head nuts (Part C: Category B-G-1 "Pressure Retaining Bolting, Greater than 2 " in Diameter") require surface examination under 1986

ISI Relief Request No. 10
(Page 5 of 19)

ASME Code Sec. XI, Table IWB-2500-1, item B.6.10. Because of the limitation of examination methodology on the threaded region of the nuts, future examination on this item will be performed according to the requirements of 1992 ASME Code Sec. XI, Table IWB 2500-1, item B 6.10, which requires a visual, VT-1 inspection of the surface area of the nuts.

Table 1: Summary of Limited Examinations

CODE Category/Item No.	SYSTEM	ISO	ITEM	METHOD	% Coverage	Limitation
B-D B 3.90	REACTOR VESSEL	FIG 5	N-2G NV	Volumetric	51	Figure 1
B-D B 3.90	REACTOR VESSEL	FIG 5	N-2H NV	Volumetric	47	Figure 2
B-D B 3.100	REACTOR VESSEL	FIG 5	N-2H- IR	Volumetric	92	Figure 3
B-D B 3.90	REACTOR VESSEL	FIG 5	N-3C NV	Volumetric	51	Figure 4
B-D B 3.90	REACTOR VESSEL	FIG 5	N-4B NV	Volumetric	51	Figure 5
B-D B 3.100	REACTOR VESSEL	FIG 5	N-4B- IR	Volumetric	98	Figure 6
B-D B 3.90	REACTOR VESSEL	FIG 1	N-7 NV	Volumetric	89	Figure 7
B-J B 9.31	RHR RETURN A	97003-A	W-10	Volumetric	43	Figure 8
B-J B 9.11	RHR RETURN A	97003-A	W-11	Volumetric	50	Figure 9
B-J B 9.11	RHR RETURN B	97004-A	W-6	Surface	88	Figure 10
B-J B 9.11	RECIRC MANIFOLD B	97006-B	W-13 LS-U&D	Volumetric	50	Figure 11
B-G-1 B 6.10	REACTOR VESSEL	FIG 6	NUTS	Surface	57	Figure 12
B-G-1 B 6.40	REACTOR VESSEL	FIG 6	LIGAMENTS	Volumetric	96	Figure 13
C-C C 3.20	CRD SCRAM HDR B	93268-3A	H-7	Surface	0	Figure 14
C-C C 3.20	RHR DISCHARGE B	13142-18a	H-9	Surface	87	Figure 15
C-F-2 C 5.51	HPCI STEAM DISCH	13142-19A	W-29	Volumetric	80	Figure 16
C-F-2 C 5.51	HPCI STEAM DISCH	13142-19A	W-29	Surface	58	Figure 16

ISI Relief Request No. 10
(Page 6 of 19)

FIGURE 1

Reactor Vessel Nozzle to Vessel N-2G NV

Limitation Data Sheet

Initial Exam Report No: **98-0089**

Procedure No. **ISI-UT-3A (Rev. 7)**

ISO No. **ISI-FIG 5**

Item No. **N-2G NV**

Description of Limitation:
All scans limited due to nozzle configuration. Exam areas shown below.

Sketch of Limitation:

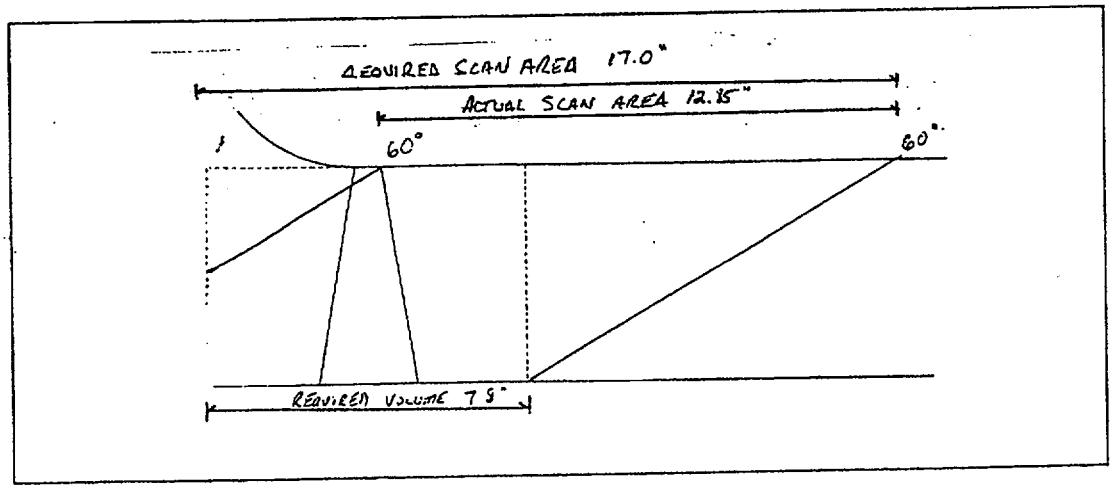

Limitation removal requirements:
None.

ISI Relief Request No. 10
(Page 7 of 19)

FIGURE 2

Reactor Vessel Nozzle to Vessel N-2H NV

Limitation Data Sheet

Initial Exam Report No: **98-0087**

Procedure No. **ISI-UT-3A (Rev. 7)**

ISO No. **ISI-FIG 5**

Item No. **N-2H NV**

Description of Limitation:
All scans limited due to nozzle configuration. Exam areas shown below. All scans also limited due to instrument attachment at BDC.

Sketch of Limitation:

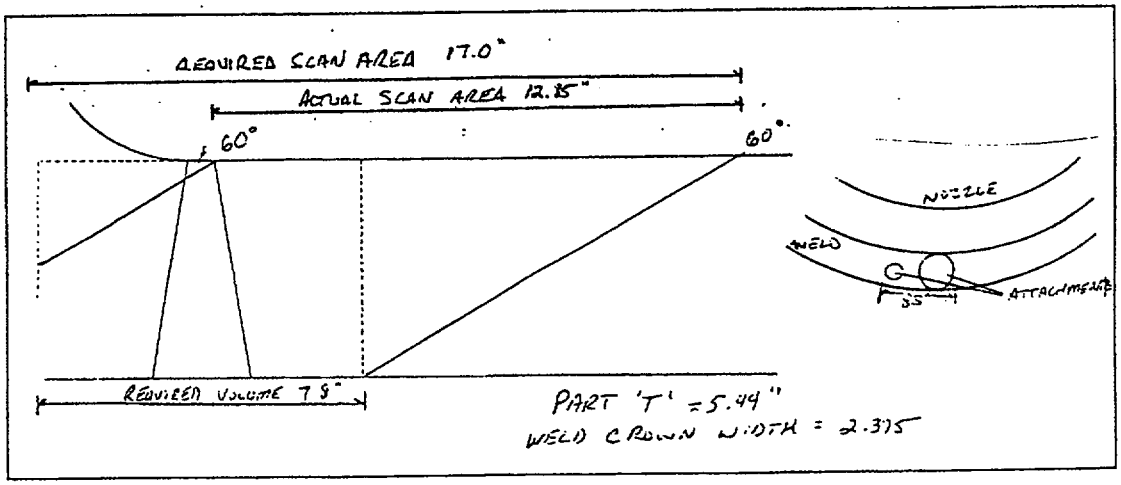

Limitation removal requirements:
None.

ISI Relief Request No. 10
(Page 7 of 19)

Figure 3

Reactor Vessel N-2H Inner Radius

Limitation Data Sheet

Initial Exam Report No: **98-0106** Procedure No. **ISI-UT-5 (Rev. 5)**

ISO No. **ISI-FIG 5** Item No. **N-2H Inner Radius**

Description of Limitation:
Two instrumentation attachments at BDC.

Sketch of Limitation:

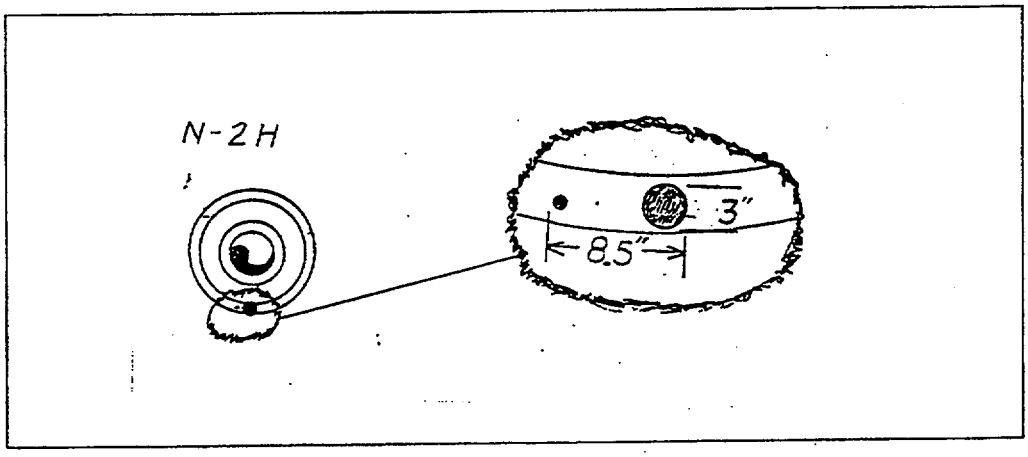

Limitation removal requirements:
None.

ISI Relief Request No. 10
(Page 8 of 19)

FIGURE 4

Reactor Vessel Nozzle to Vessel N-3C NV

Limitation Data Sheet

Initial Exam Report No: **98-0085** Procedure No. **ISI-UT-3A (Rev. 7)**

ISO No. **ISI-FIG 5** Item No. **N-3C Nozzzle-to-Vessel Weld**

Description of Limitation:
All scans limited due to nozzle configuration. Exam areas shown below.

Sketch of Limitation:

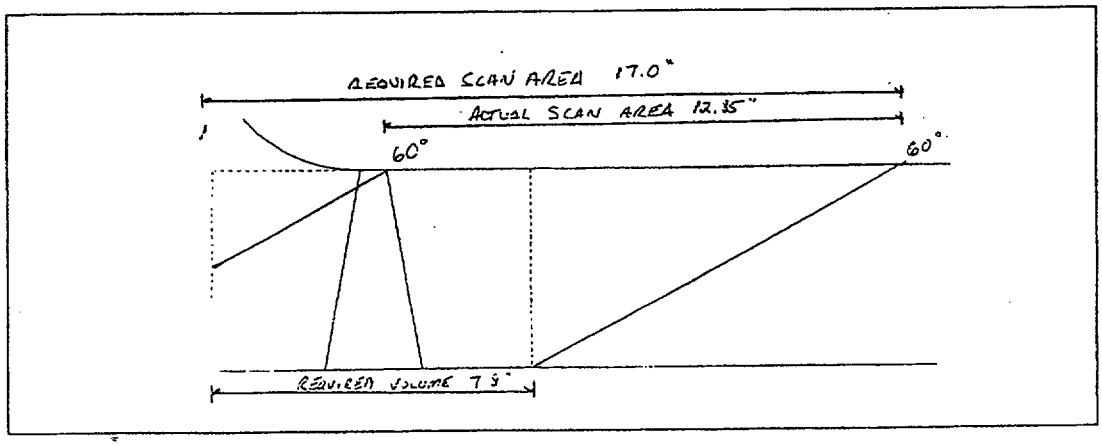

Limitation removal requirements:
None.

ISI Relief Request No. 10
(Page 9 of 19)

FIGURE 5

Reactor Vessel Nozzle to Vessel N-4B NV

Limitation Data Sheet

Initial Exam Report No: **98-0063**

Procedure No. **ISI-UT-3A (Rev. 7)**

ISO No. **ISI-FIG 5**

Item No. **N-4B NV**

Description of Limitation:
Nozzle configuration limits all scans, also welded instrument attachments 2" from weld toe 16" CW limits all scans.

Sketch of Limitation:

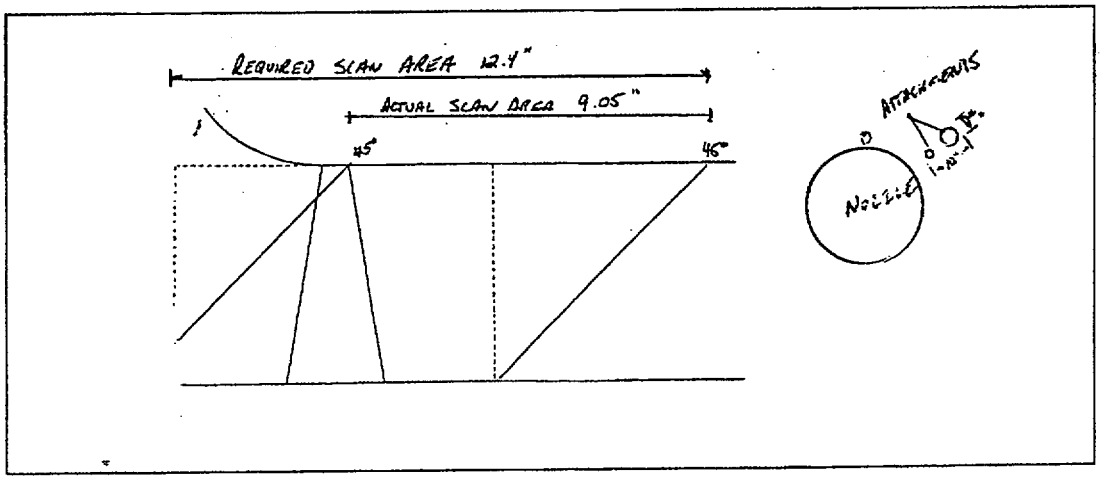

Limitation removal requirements:
Removal is not possible.

ISI Relief Request No. 10
(Page 9 of 19)

Figure 6

Reactor Vessel N-4B Inner Radius

Limitation Data Sheet

Initial Exam Report No: **98-0058** Procedure No. **ISI-UT-5 (Rev. 5)**

ISO No. **ISI-FIG 5** Item No. **N-4B**

Description of Limitation:
Instrumentation attachments located 6" from blend radius and 24" CW from TDC.

Sketch of Limitation:

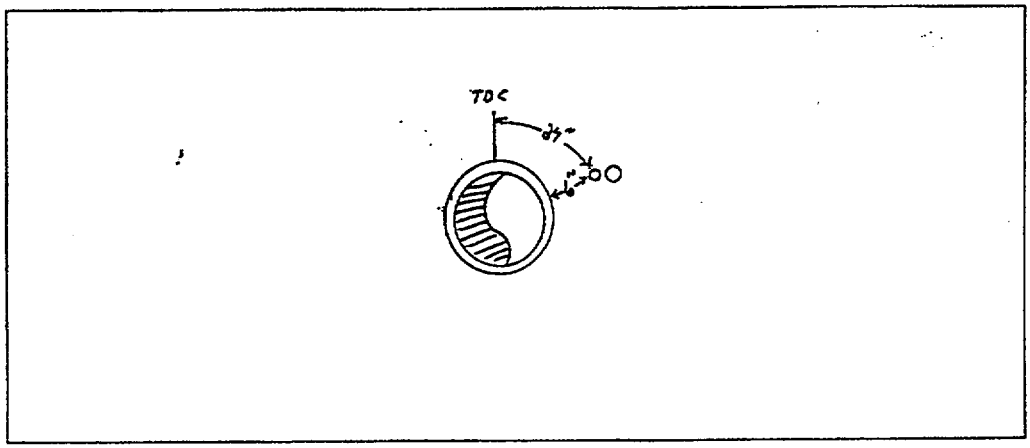

Limitation removal requirements:
None.

ISI Relief Request No. 10
(Page 10 of 19)

FIGURE 7

Reactor Vessel Nozzle to Vessel N-7 NV

Limitation Data Sheet

Initial Exam Report No: **98-0234(0°)** Procedure No. **ISI-UT-3A (Rev. 7)**
98-0241(45°); 98-0242(60°)

ISO No. **ISI-FIG 1** Item No. **N-7 NOZZLE / HEAD VENT**

Description of Limitation:
Scan 2 area limited to 1.5" from centerline on nozzle side due to nozzle configuration. Scan 1 scan area limited to 6.65" for 45° and 9.5" for 60° due to nozzle configuration. 88.9% code coverage achieved.

Sketch of Limitation:

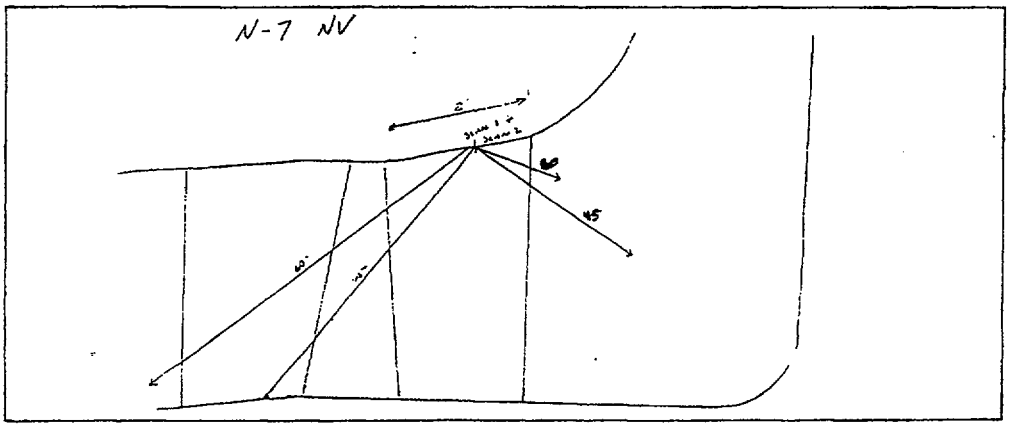

Limitation removal requirements:
None.

ISI Relief Request No. 10
(Page 11of 19)

FIGURE 8

RHR Return A W-10

Limitation Data Sheet

Initial Exam Report No: **98-0141** Procedure No. **ISI-UT-1 (Rev. 12)**

ISO No. **ISI-97003-A** Item No. **W-10**

Description of Limitation:
No scan on 16" pipe due to weld orientation. No circ scans on weld and 16" pipe due to configuration. 1.25" average scan area on weldolet side. 43.4% code coverage achieved.

Sketch of Limitation:

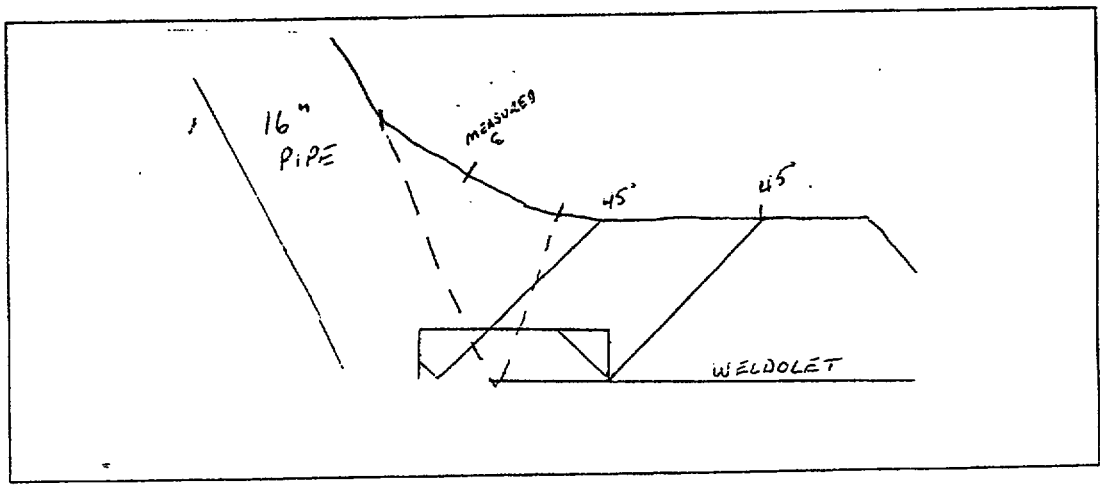

Limitation removal requirements:
None.

ISI Relief Request No. 10
(Page 12 of 19)

FIGURE 9

RHR Return A W-11

Limitation Data Sheet

Initial Exam Report No: ~~98-0141~~ 98-0142 Procedure No. **ISI-UT-1 (Rev. 12)**

ISO No. **ISI-97003-A** Item No. **W-11**

Description of Limitation:
No scans 1 & 2 due to configuration of flange and weldolet. 50.0% code coverage achieved.

Sketch of Limitation:

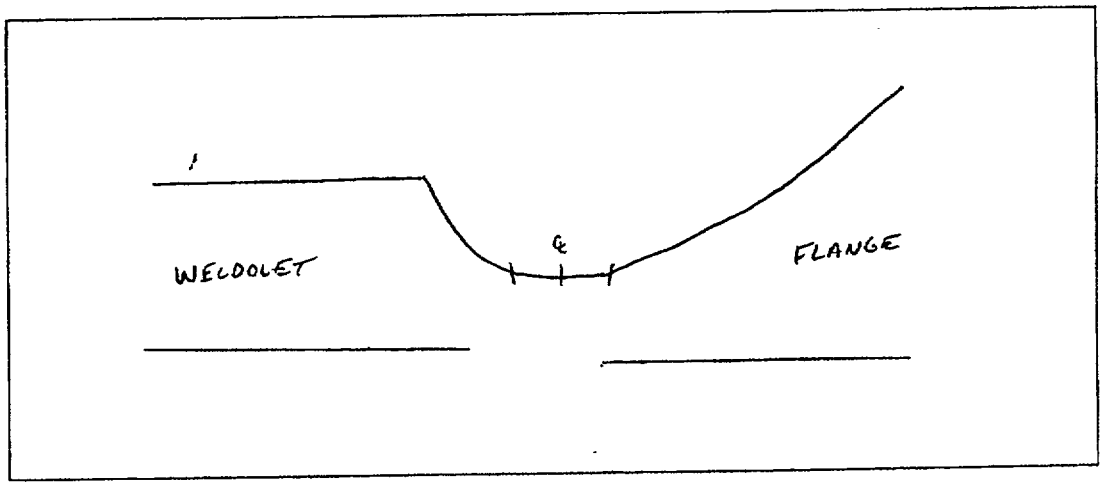

Limitation removal requirements:
None.

ISI Relief Request No. 10
(Page 13 of 19)

FIGURE 10

RHR Return B W-6

Limitation Data Sheet

Initial Exam Report No: **98-0160** Procedure No. **ISI-MT-1 (Rev. 9)**

ISO No. **ISI-97004-A** Item No. **W-6**

Description of Limitation:
Limitation due to structural beam at 3" CW and 3" CCW from 0°.

Sketch of Limitation:

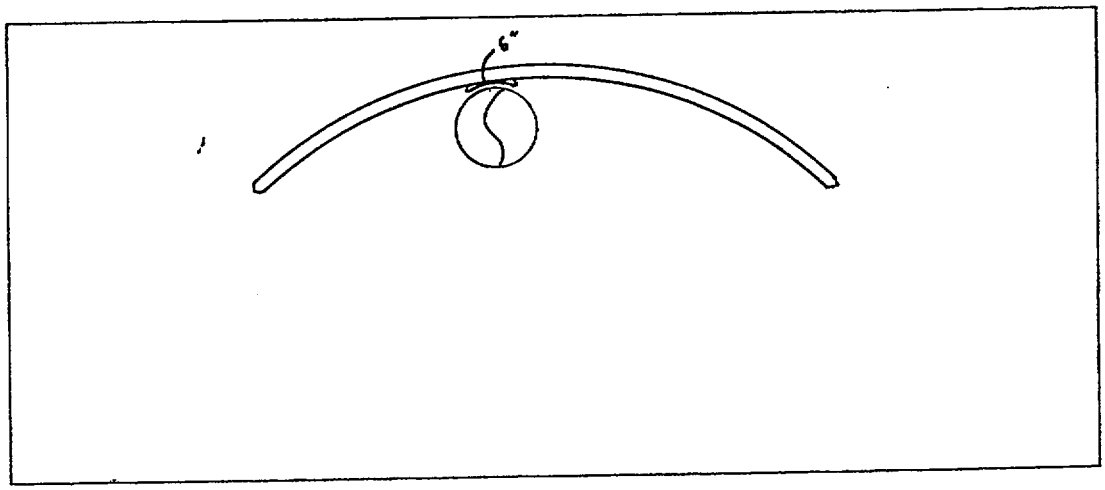

Limitation removal requirements:
None. Permanent building structure.

ISI Relief Request No. 10
(Page 14 of 19)

FIGURE 11

Recirc. Manifold B W-13 LS-U&D

Limitation Data Sheet

Initial exam report # 94-0094 Procedure # 1SI UT-11a Rev. 7

ISO # 1SI-97006-B Item # W-13 LS D

Description of Limitation ONLY 6" OF DOWNSTREAM GIRTSEAM EXAMINED DUE TO SUPPORT INTERFERENCE. 100% COVERAGE OBTAINED ON W-13, 50% COVERAGE OBTAINED ON DOWNSTREAM LONG SEAM

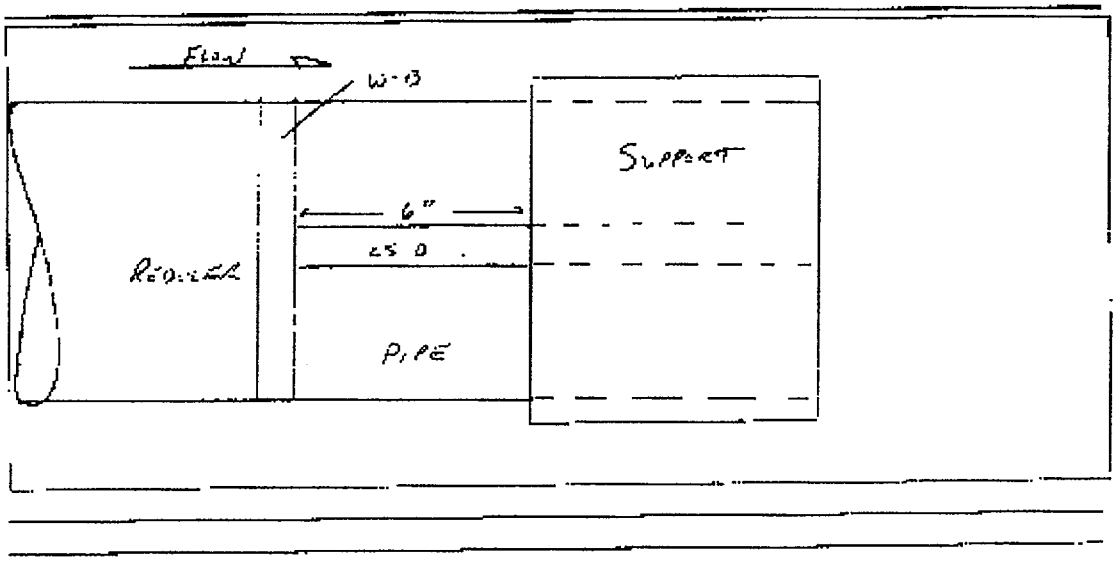

Sketch of Limitation

Limitation removal requirements NONE WELDED SUPPORT

ISI Relief Request No. 10
(Page 15 of 19)

FIGURE 12

Reactor Vessel Closure Nuts

Limitation Data Sheet

Initial Exam Report No: **98-0263** Procedure No. **ISI-MT-2 (Rev. 9)**

ISO No. **ISI FIG 6** Item No. **NUTS**

Description of Limitation:
No exam on inner threads due to configuration.
57.1% coverage obtained.

Sketch of Limitation:

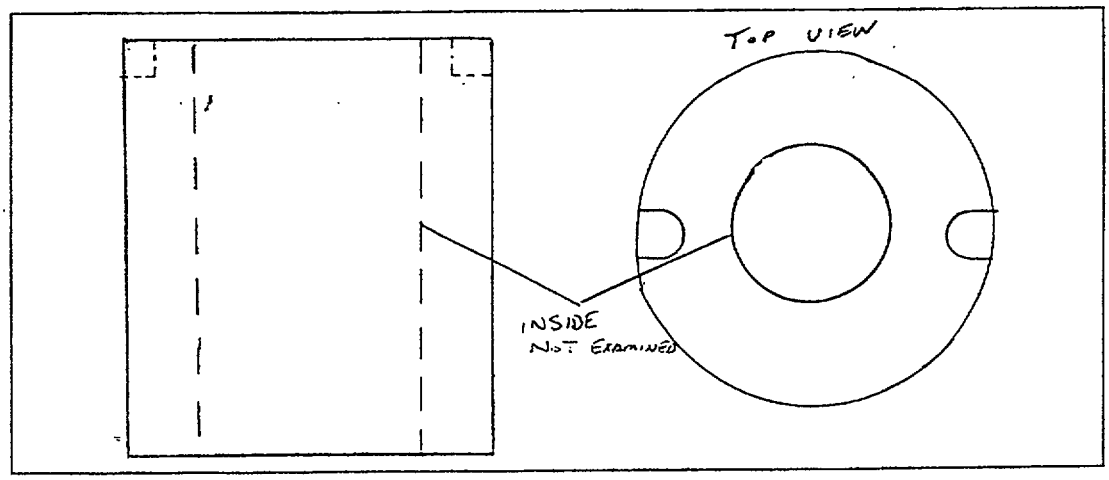

Limitation removal requirements:
None.

ISI Relief Request No. 10
(Page 16 of 19)

Figure 13

Reactor Vessel Ligaments

Limitation Data Sheet

Initial Exam Report No: **98-0014** Procedure No. **ISI-UT-7 (Rev. 5)**

ISO No. **ISI-FIG 6** Item No. **LIGAMENTS**

Description of Limitation:
"Seal ring" groove. Ref. drawing NX-8290-63 (Rev A). Examined studs: 3, 5, 7, 8, 9, 10, 11, 12, 14, 16, 17, 20, 21, 22, 44, 45, 46, 53, 54, 57, 60

Sketch of Limitation:

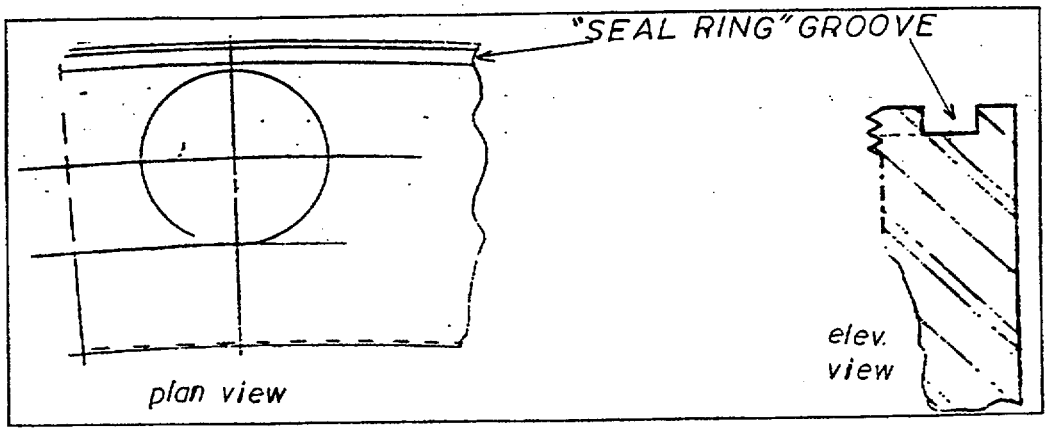

Limitation removal requirements:
None.

ISI Relief Request No. 10
(Page 17 of 19)

FIGURE 14

CRD Scram Header B H-7

TITLE: Limitations to NDE
NUMBER: ISI-LTS-1 Revision 0

Figure 3
Limitation Data Sheet

Initial exam report # 97-0137 Procedure # ISI-MT-1 REV. 8

ISO # ISI-93268-3-A Item # H-7

Description of Limitation NO ACCESS TO (4) LUG FILLET WELDS. EXAMINATION WAS NOT PERFORMED DUE TO RESTRAINT CONFIGURATION, SKETCH.

Sketch of Limitation

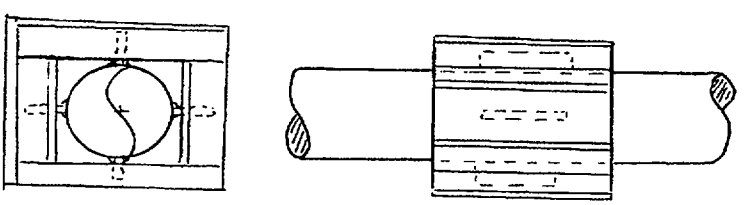

Limitation removal requirements N/A

ISI Relief Request No. 10
(Page 18 of 19)

FIGURE 15.

RHR Discharge B H-9

Limitation Data Sheet

Initial exam report # 94-0220 Procedure # ISI-MT-1 R.7

ISO # ISI-13142-18-A Item # H-9

Description of Limitation "STABILIZING" LUG WELDED TO CLAMP PROHIBITS EXAMINATION OF ONE END OF WELD. CLAMP PROHIBITS EXAMINATION OF REQUIRED 1/2" OF ADJACENT BASE METAL.

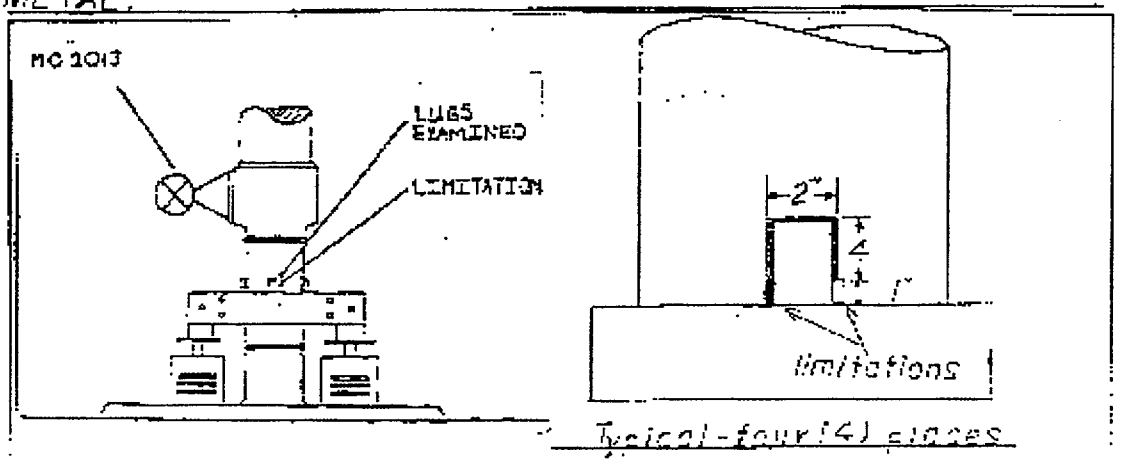

Sketch of Limitation

Limitation removal requirements REMOVAL OF CLAMP ASSEMBLY REQUIRED TO ACHIEVE ADDITIONAL COVERAGE.

ISI Relief Request No. 10
(Page 19 of 19)
FIGURE 16.

HPCI Steam Discharge W-29

TITLE: Limitations to NDE
NUMBER: ISI-LTS-1 Revision 0

Figure 3
Limitation Data Sheet

Initial exam report # 97-0094 (BL) (45°) 97-0095 BL (60°) 97-0096 BL (70°) Procedure # ISI-UT-1 REV. 11

ISO # ISI-13142-19A Item # W-29

Description of Limitation RESTRAINT WITH FILLET WELD ON WELD CROWN AND DOWNSTREAM AREA OF WELD. SEE BELOW FOR COVERAGE PLOTS WITH 45°, 60°, AND 70° ANGLE.

Sketch of Limitation NOTE: (FROM MT REPORT 97-C093) WELD WIDTH = 0.9" ACCESSIBLE WELD SURFACE = 0.6" RMD 7/31/97

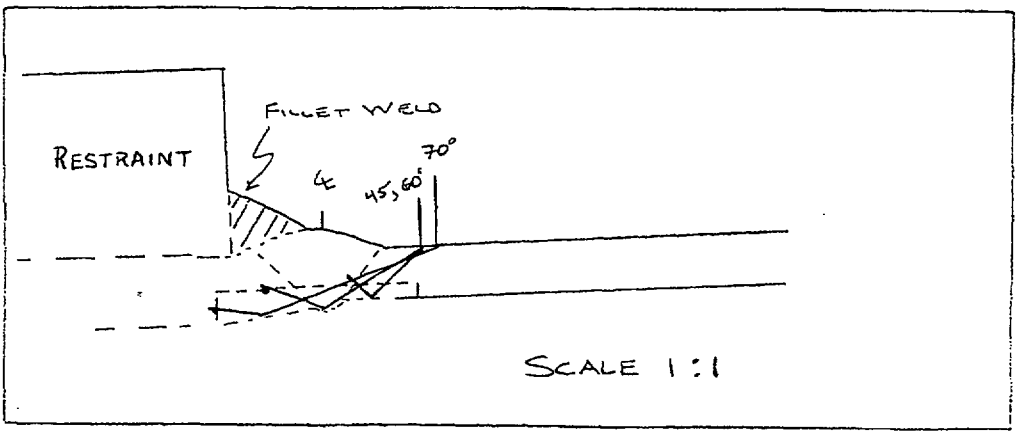

Limitation removal requirements NOT FEASIBLE RMD 7/31/97

Approval:

Approved August 4, 1999 NRC (TAC No. MA3397).

QUALITY GROUP CLASSIFICATION DRAWINGS
(ISI BOUNDARY DWGS)

ISO #	REV	SYSTEM/DESCRIPTION
BOUNDARY DRAWINGS		
1.5-2	2	Main Steam System
1.5-3	1	Feedwater System
1.5-4	1	Reactor Circulation System
1.5-5	1	Reactor Circulation System
1.5-6	1	Residual Heat Removal System Loop A
1.5-7	2	Residual Heat Removal System Loop B
1.5-8	1	HP Coolant Injection System (Steam Side)
1.5-9	1	HP Coolant Injection System (Water Side)
1.5-10	1	RX Core Isolation Cooling (Steam Side)
1.5-11	1	Reactor Core Isolation Cooling (Water Side)
1.5-12	1	Standby Liquid Control System
1.5-13	1	Primary Contain. Atmos. Cont. System
1.5-14	1	Emergency Diesel Gen. Emer. Serv. Water
1.5-15	1	Emergency Diesel Gen. Emer. Serv. Water
1.5-16	1	RHR Service Water
1.5-17	1	Hydraulic Control Unit
1.5-18	1	Cont. Rod Drive System (Scram Discharge Piping)
1.5-19	1	Compressed Air System
1.5-20	1	Condensate Service & Rx Bldg CW
1.5-21	1	RX Water Clean-up & Liquid Radwaste
1.5-22	1	Traversing In-core Probe System
1.5-23	1	Excess - Flow Check Valves
1.5-24	1	Combustible Gas Control, Division I
1.5-25	1	Combustible Gas Control, Division II
1.5-26	1	Primary Containment Sampling Systems
1.5-27	1	Reactor Vessel Instrumentation

KEY

– – – – – – – INDICATES NDE REQUIRED

——————— INDICATES NO NDE REQUIRED

ASME CLASS CODE 1

ASME CLASS CODE 2

ASME CLASS CODE 3

ASME SAFETY RELATED COMPONENT BUT CANNOT BE CLASSIFIED UNDER REG. GUIDE 1.26 CRITERIA.

ASME NON SAFETY RELATED

ISO #	REV	SYSTEM/DESCRIPTION
CLASS 1 & 2 DRAWINGS		
ISI Fig. 0	2	RX Vessel Interior
ISI Fig. 1	3	RX Vessel Top Head
ISI Fig. 2	3	CRD Location RX Vessel
ISI Fig. 3	3	RX Vessel Bottom Head
ISI Fig. 4	3	Circ. & Long Reactor Vessel Welds
ISI Fig. 5	3	RX Vessel Nozzles
ISI Fig. 6	3	Reactor Vessel Bolting
ISI 13142-17-A	3	RHR "A" Suction
ISI 13142-17-B	3	HPCI Water
ISI-13142-17-B	3	HPCI Water
ISI-13142-17-C	3	RHR B
ISI-13142-18-A	4	RHR B
ISI-13142-18-B	3	RHR "B" Discharge
ISI-13142-18-C	2	RHR "B" Discharge
ISI-13142-19-A	3	HPCI Steam Side Discharge
ISI-13142-19-B	3	RCIC Steam Discharge
ISI-13142-20-A	3	Core Spray "A" Suction
ISI-13142-20-B	3	Core Spray "B" Suction
ISI-13142-20-C	3	RHR RX Vessel Head Cooling
ISI-13142-26-A	3	Core Spray "B" Discharge
ISI-13142-26-B	3	Core Spray "B" Discharge
ISI-13142-26-C	3	Core Spray "B" Discharge
ISI-13142-29-A	0	RX Cooling Water
ISI-13142-31-A	3	Core Spray B
ISI-13142-31-B	3	Core Spray "A" Discharge
ISI-13142-31-C	3	Core Spray "A" Discharge
ISI-13142-33-A	3	Main Steam A
ISI-13142-34-A	3	Main Steam B
ISI-13142-35-A	3	Main Steam C
ISI-13142-36-A	3	Main Steam D
ISI-13142-37-A	3	RHR "A" Discharge
ISI-13142-37-B	3	Containment Spray
ISI-13142-37-C	3	RHR "A" Discharge
ISI-13142-40-A	3	HPCI Water Side Discharge
ISI-13142-40-B	3	HPCI Water Side Discharge
ISI-13142-41-A	3	RCIC Water Suction
ISI-13142-42-A	3	HPCI Steam Side
ISI-13142-43-A	3	RCIC Steam Side
ISI-13142-48-A	3	RHR Service Water
ISI-13142-48-B	3	RHR Service Water
ISI-13142-49-A	3	RHR A

ISO #	REV	SYSTEM/DESCRIPTION
ISI-13142-51-A	3	RHR A
ISI-13142-51-B	3	RHR B
ISI-13142-52-A	3	Feedwater C & D
ISI-13142-53-A	3	Feedwater A & B
ISI-13142-62	2	Fuel Pool Emergency Cooling
ISI-13142-67	2	Fuel Pool Emergency Cooling
ISI-16	3	Jet Pump Instrument Nozzle
ISI-19	3	RX Instrument Nozzles
ISI-47	3	RCIC Pump
ISI-48	3	RHR Pumps
ISI-49	3	Core Spray Pump Supports
ISI-73880-A	3	RWCU
ISI-74209-1-A	3	Recirc. "A" Drain
ISI-74210-1-A	3	Recirc. "B" Drain
ISI-74215-A	3	Standby Liquid Control
ISI-782-A	3	RX Head Vent
ISI-782-A-A	3	RX Head Vent
ISI-786-A	3	Main Steam Condensate Leakoff
ISI-7905-32-A	3	RHR HX "A"
ISI-7905-32-B	3	RHR HX "B"
ISI-821-A	3	RX Bottom Head Drain
ISI-8292-42-A	3	HPCI Pumps
ISI-93268-1-A	3	CRD Scram Header "A"ISI-93268-3-A
ISI-94966-A	0	Vacuum Relief & CGCS Outlet Div 1
ISI-94966-B	0	Containment Air Purge
ISI-94699-A	0	Combustion Gas Control Outlet Div 2
ISI-94879-A	0	Combustion Gas Control Inlet Div 1&2
ISI-97003-A	3	RHR Return Loop "A"
ISI-97003-B	3	RHR "A"
ISI-97004-A	3	RHR Return Loop "B"
ISI-97005-A	3	Recirc. Loop "A"
ISI-97005-B	3	Recirc. Manifold "A"
ISI-97005-C	3	Recirc. Pump "A" Supports
ISI-97006-A	3	Recirc Loop "B"
ISI-97006-B	3	Recirc. Manifold "B"
ISI-97006-C	3	Recirc. Pump "B" Supports
ISI-97007-A	3	RX Instrument Nozzle N-11B
ISI-97008-A	3	RX Instrument Nozzle N-11A
ISI-97027-A	3	RHR Equalizer
ISI-105531-A	0	Standby Gas Treatment & RX Plenum

ISO #	REV	SYSTEM/DESCRIPTION
ISI-158074-A	0	Torus Hard Pipe Vent
CLASS 3 DRAWINGS		
ND-ISI-100	1	RHR Service Water
ND-ISI-101	1	RHR Service Water
ND-ISI-102	1	RHR Service Water
ND-ISI-103	1	RHR Service Water
ND-ISI-104	1	RHR Service Water
ND-ISI-105	1	RHR Service Water
ND-ISI-106	1	RHR Service Water
ND-ISI-107	1	RHR Service Water
ND-ISI-108	1	RHR Service Water
ND-ISI-109	1	RHR Service Water
ND-ISI-110	1	RHR Service Water
ND-ISI-111	1	RHR Service Water
ND-ISI-123	1	RHR Service Water
ND-ISI-141	1	Combustible Gas Control
ND-ISI-142	1	Combustible Gas Control
ND-ISI-144	1	Combustible Gas Control
ND-ISI-145	1	Combustible Gas Control
NON-CODE AUGMENTED		
NC-ISI-37	4	RCIC Feedwater
NC-ISI-51	1	CRD to RWCU

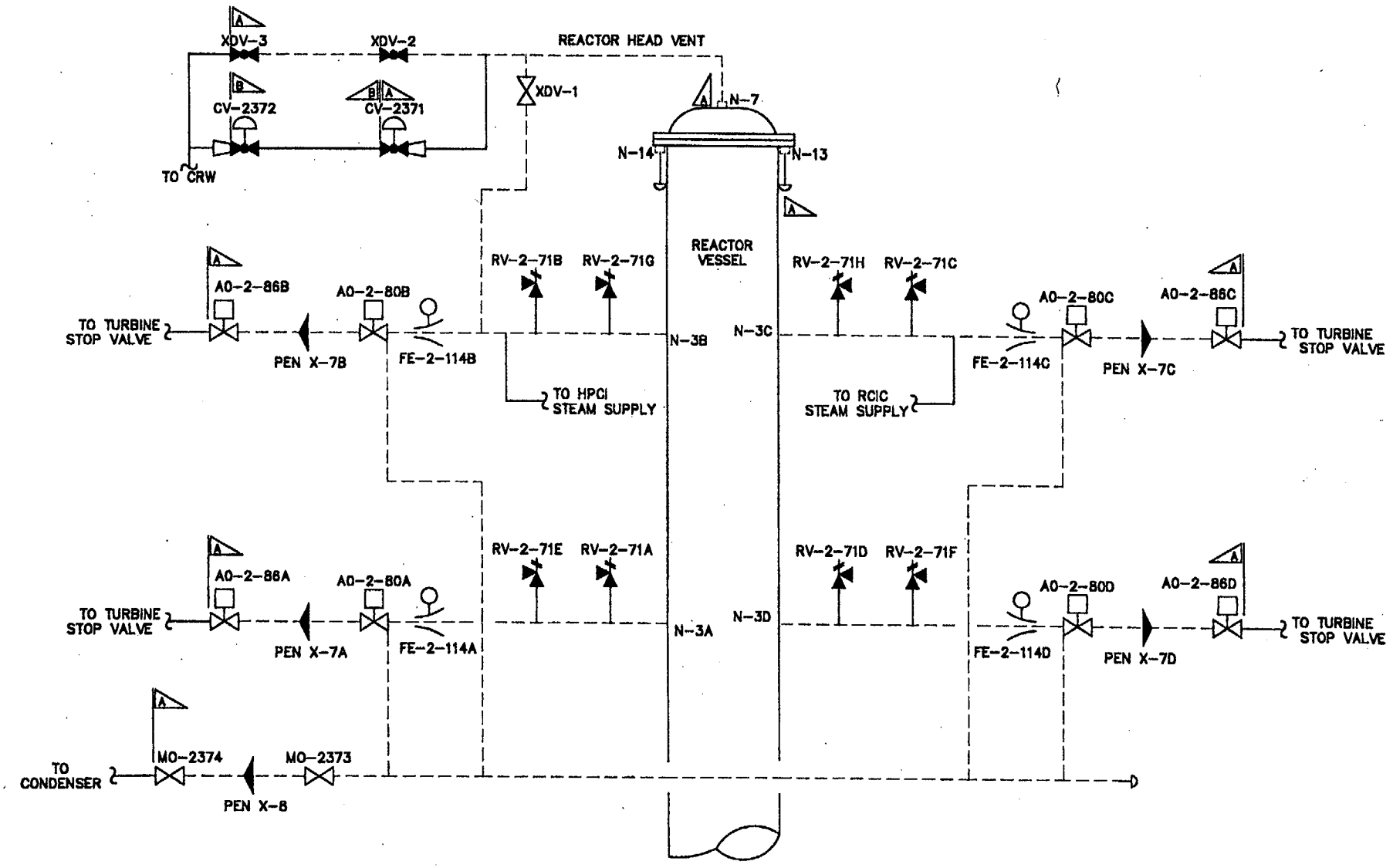

REF: NH-36241

FILE NO: 02

NSP (M&SP)– MONTICELLO ISI

DWN: TJH CHKD: DSW APPD: DSW

SYSTEM: MAIN STEAM SYSTEM

LINE:

DWG: 1.5-2 REV: 02

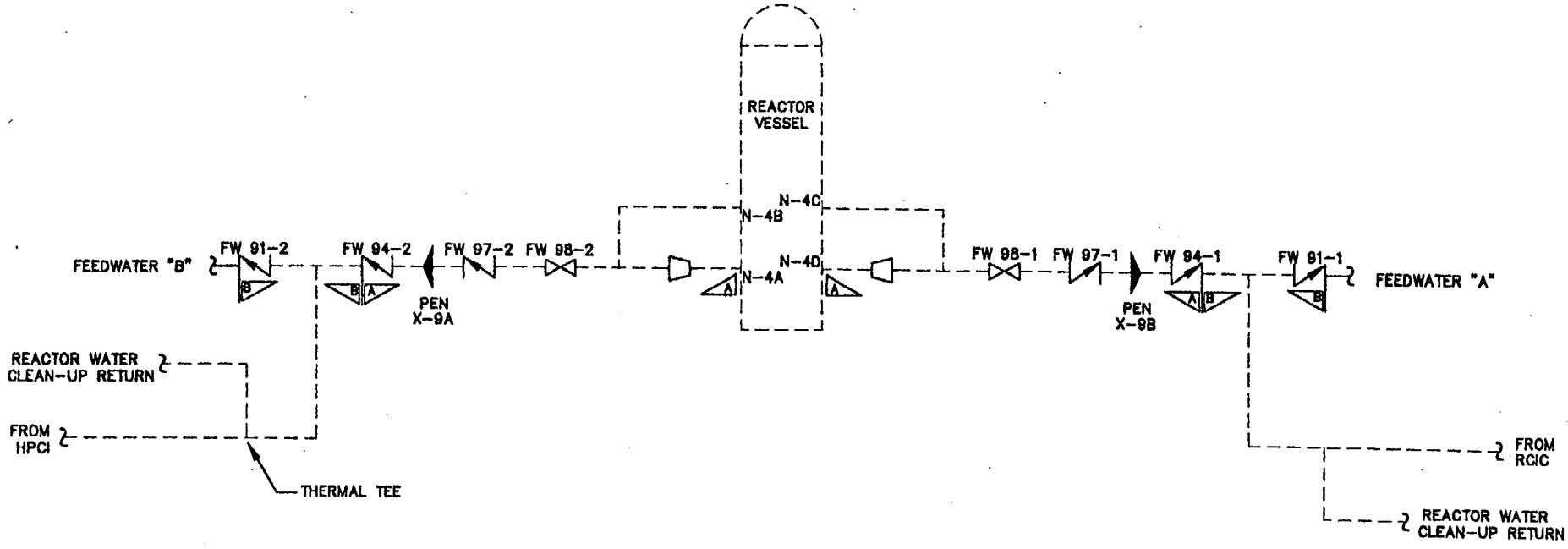

REF: NH-36241 | FILE NO: 03

NSP (M&SP)- MONTICELLO | ISI

DWN: CADWorks CHKD: DSW APPD: DSW

SYSTEM: FEEDWATER SYSTEM

LINE:

DWG: 1.5-3 | REV: 01

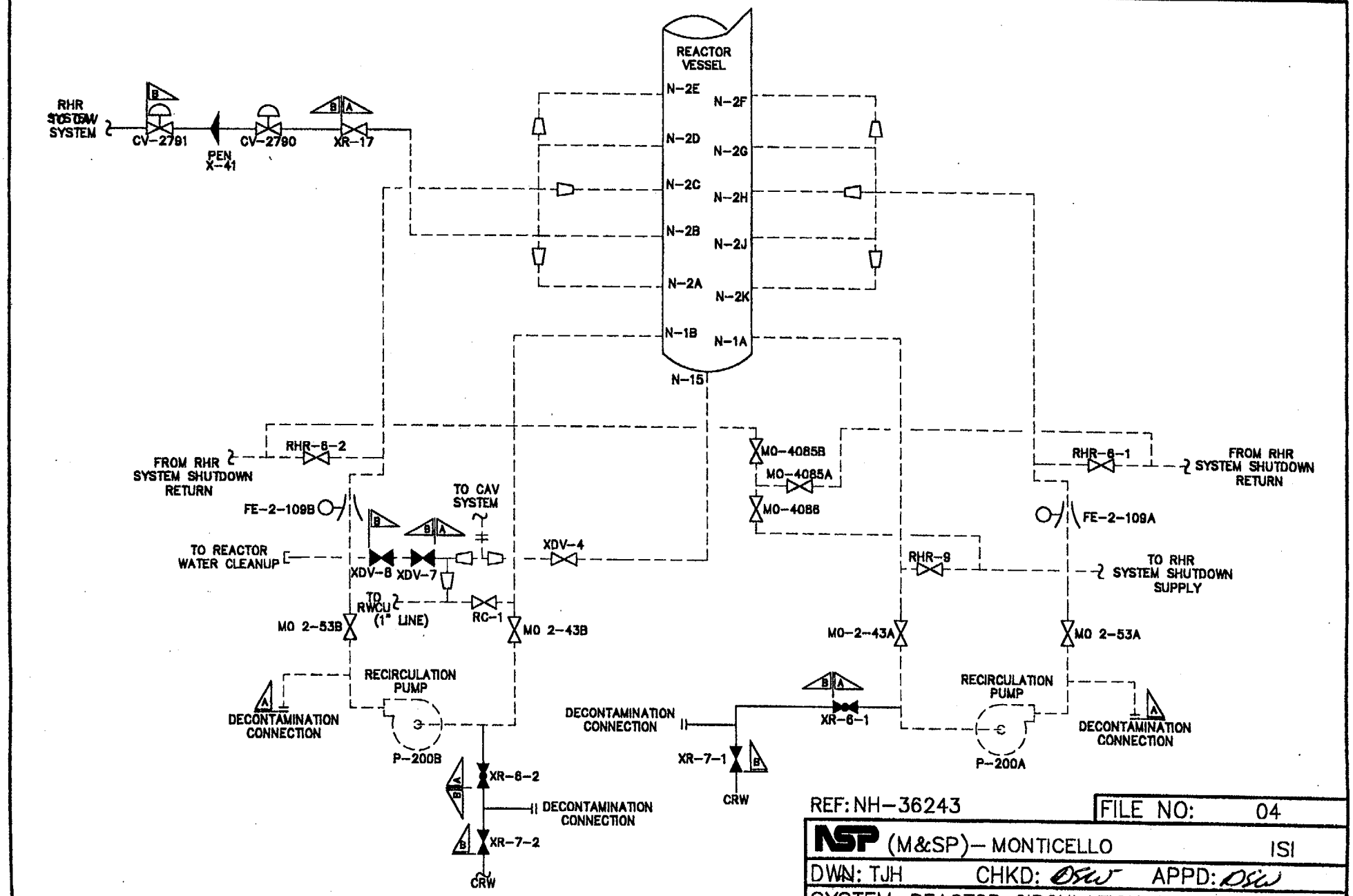

REF: NH-36243

FILE NO: 04

NSP (M&SP)– MONTICELLO ISI

DWN: TJH CHKD: DSW APPD: DSW

SYSTEM: REACTOR CIRCULATION SYSTEM

LINE:

DWG: 1.5-4 REV: 01

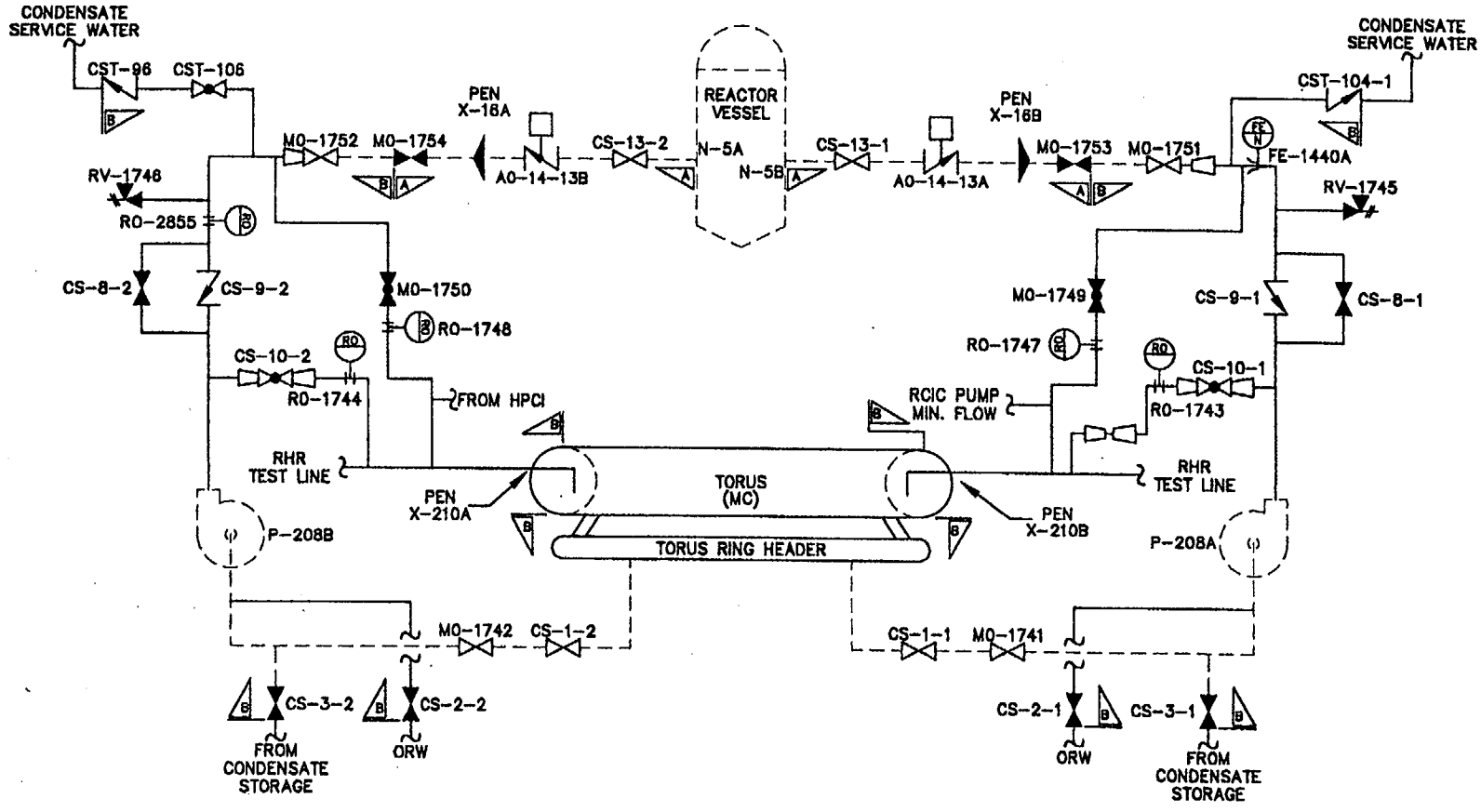

REF: NH-36248

FILE NO: 04

NSP (M&SP)– MONTICELLO ISI

DWN: CADWorks CHKD: DSW APPD: DSW

SYSTEM: REACTOR CIRCULATION SYSTEM

LINE:

DWG: 1.5-5 REV: 01

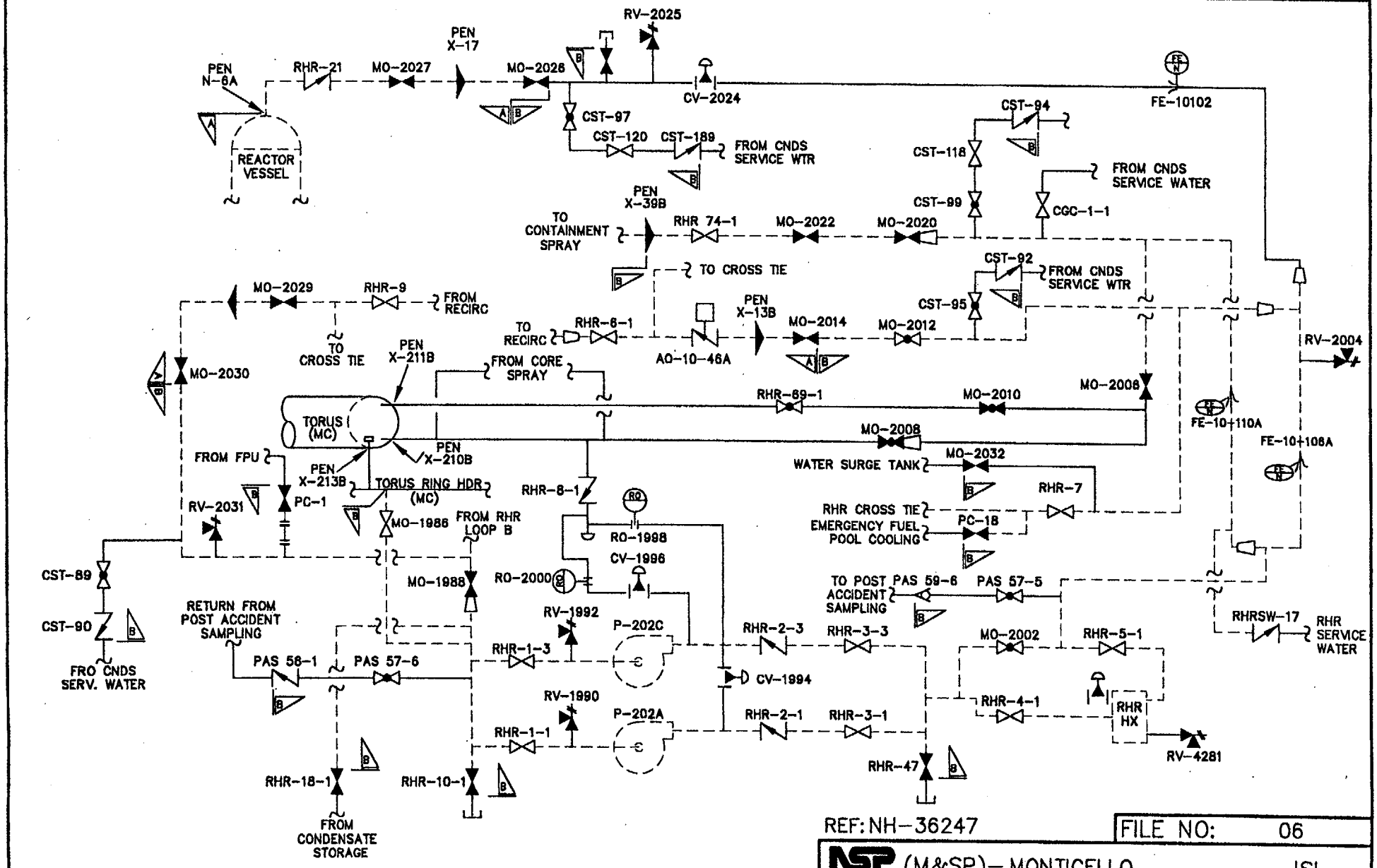

REF: NH-36247

FILE NO: 06

NSP (M&SP)– MONTICELLO ISI

DWN: CADWorks CHKD: DSW APPD: DSW

SYSTEM: RESIDUAL HEAT REMOVAL SYSTEM LOOP A

LINE:

DWG: 1.5-6 REV: 01

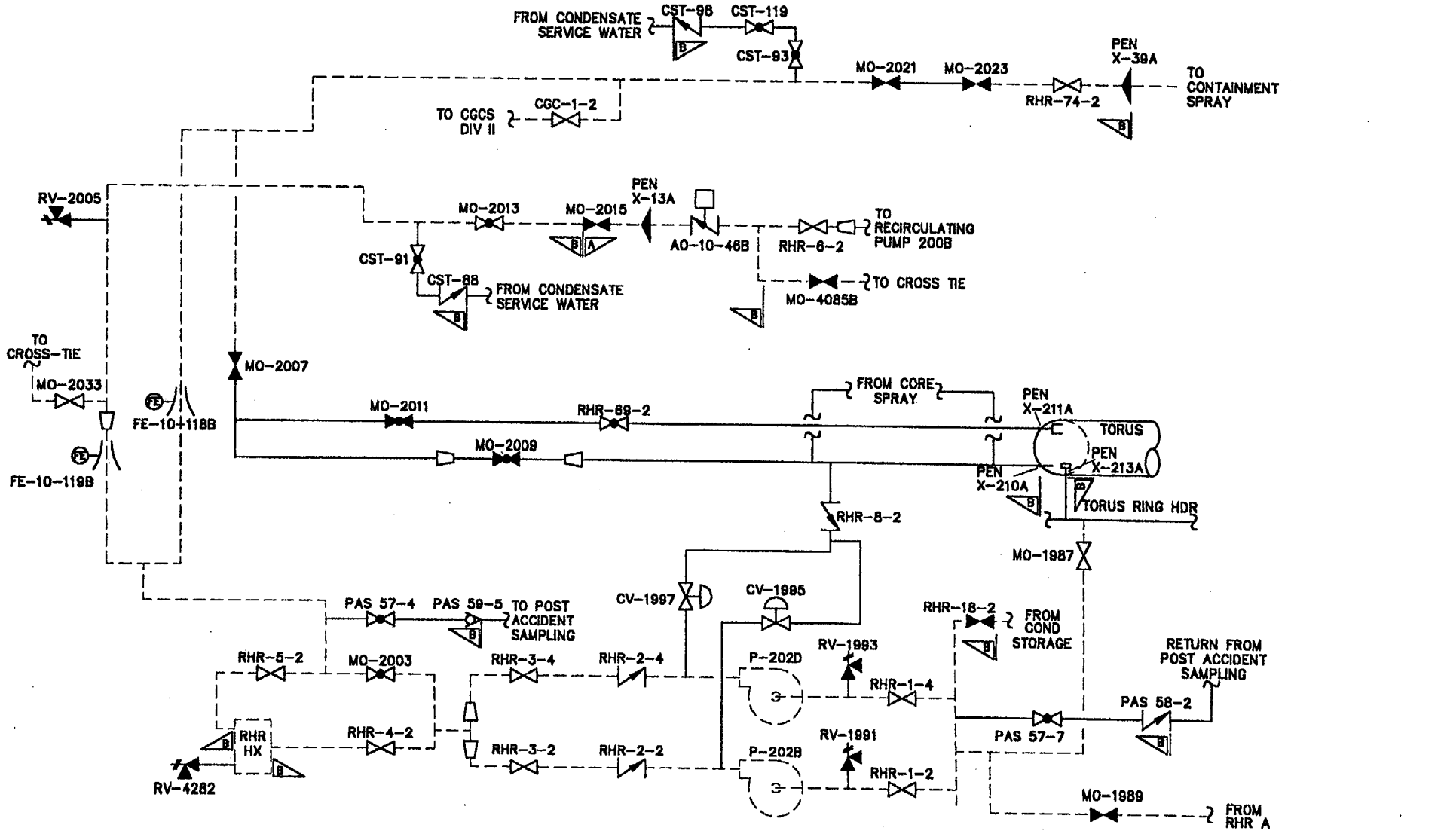

REF: NH-36246 | FILE NO: 07

NSP (M&SP)– MONTICELLO | ISI

DWN: TJH | CHKD: DSW | APPD: DSW

SYSTEM: RESIDUAL HEAT REMOVAL SYSTEM LOOP B

LINE:

DWG: 1.5-7 | REV: 02

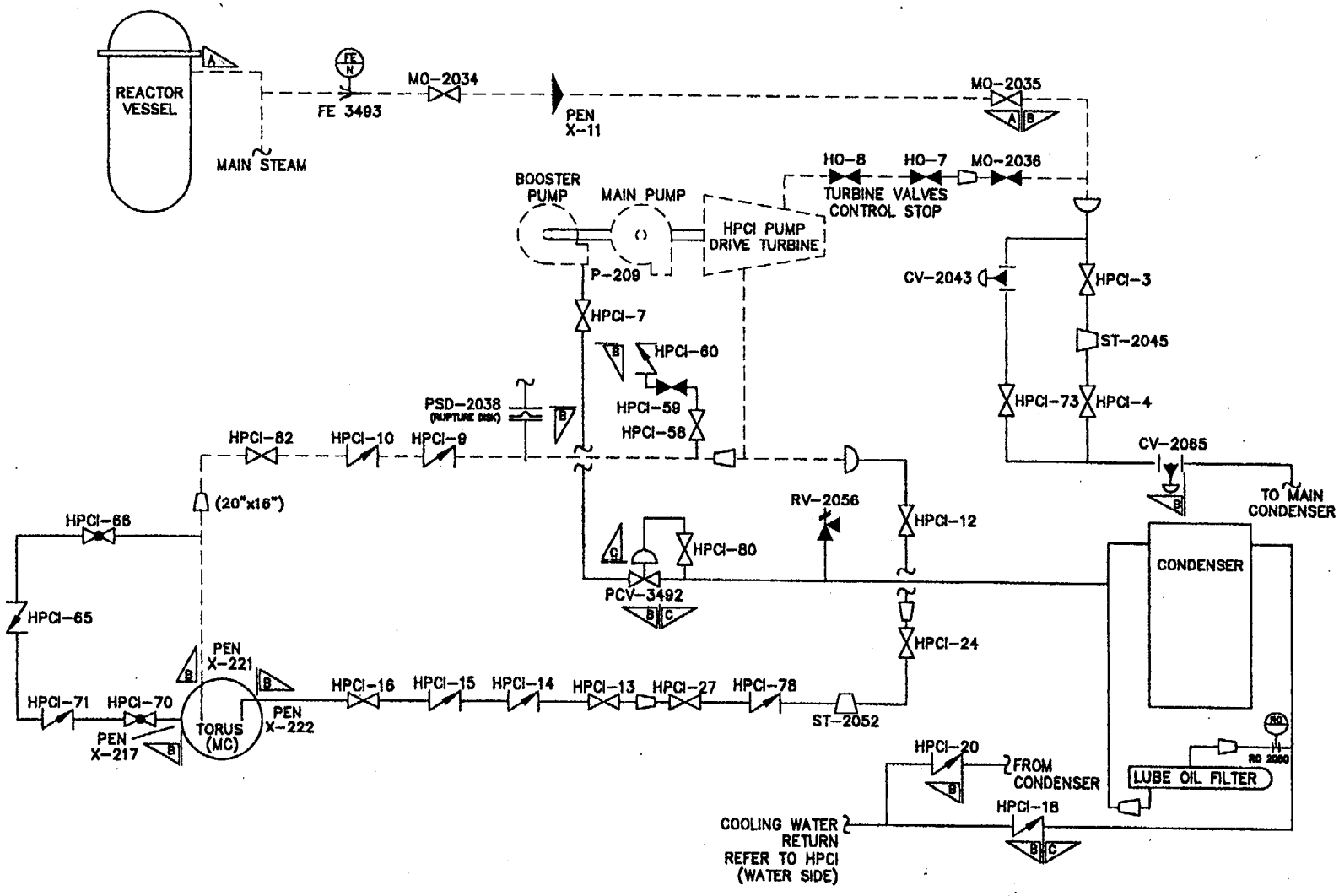

REF: NH-36249

FILE NO: 08

NSP (M&SP)-- MONTICELLO ISI

DWN: CADWorks CHKD: DSW APPD: DSW

SYSTEM: HP COOLANT INJECTION SYS. (STEAM SIDE)

LINE:

DWG: 1.5-8 REV: 01

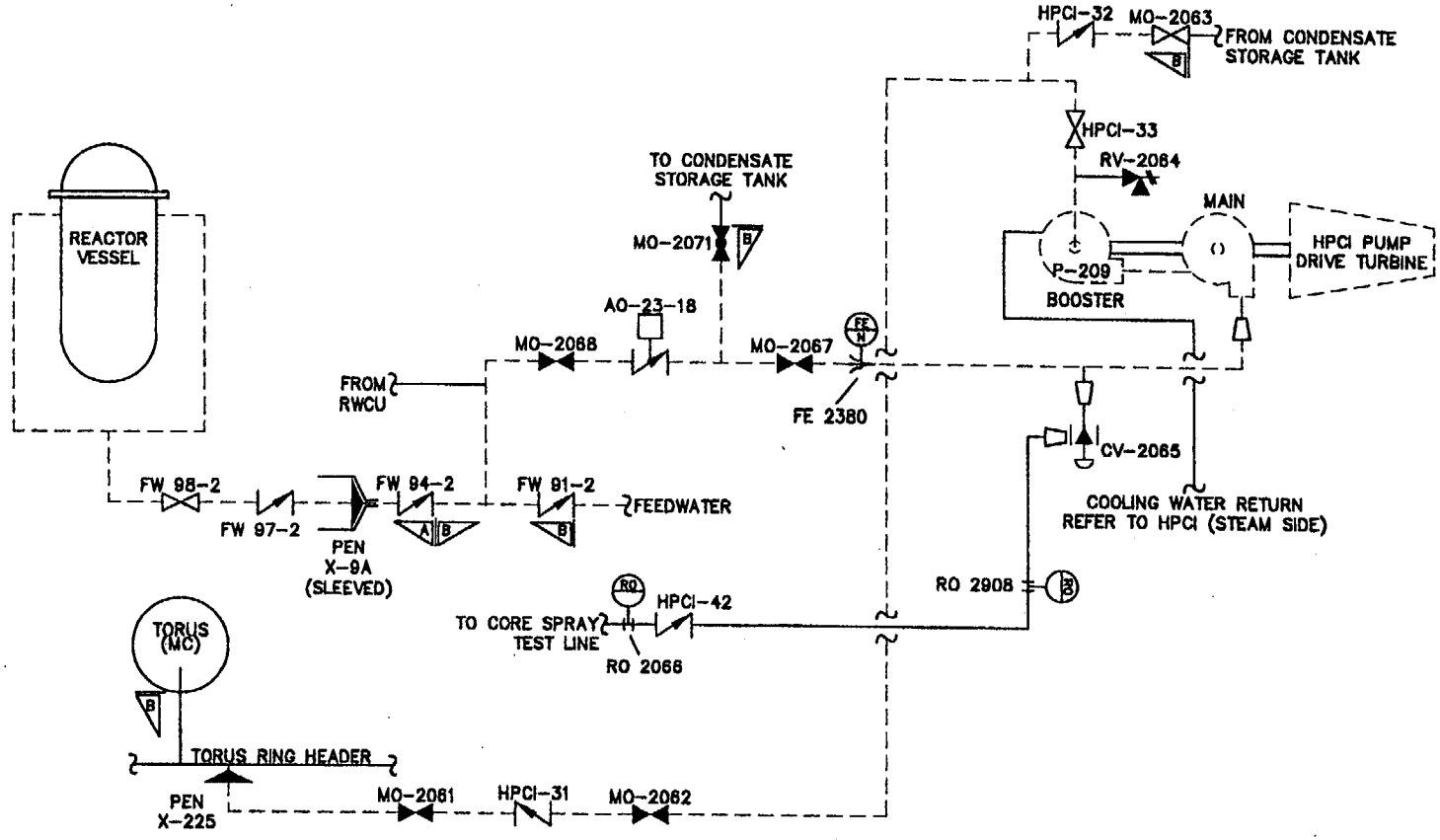

REF: NH-36250 | FILE NO: 09

NSP (M&SP)– MONTICELLO ISI

DWN: CADWorks CHKD: DRW APPD: DRW

SYSTEM: HP COOLANT INJECTION SYS. (WATER SIDE)

LINE:

DWG: 1.5-9 | REV: 01

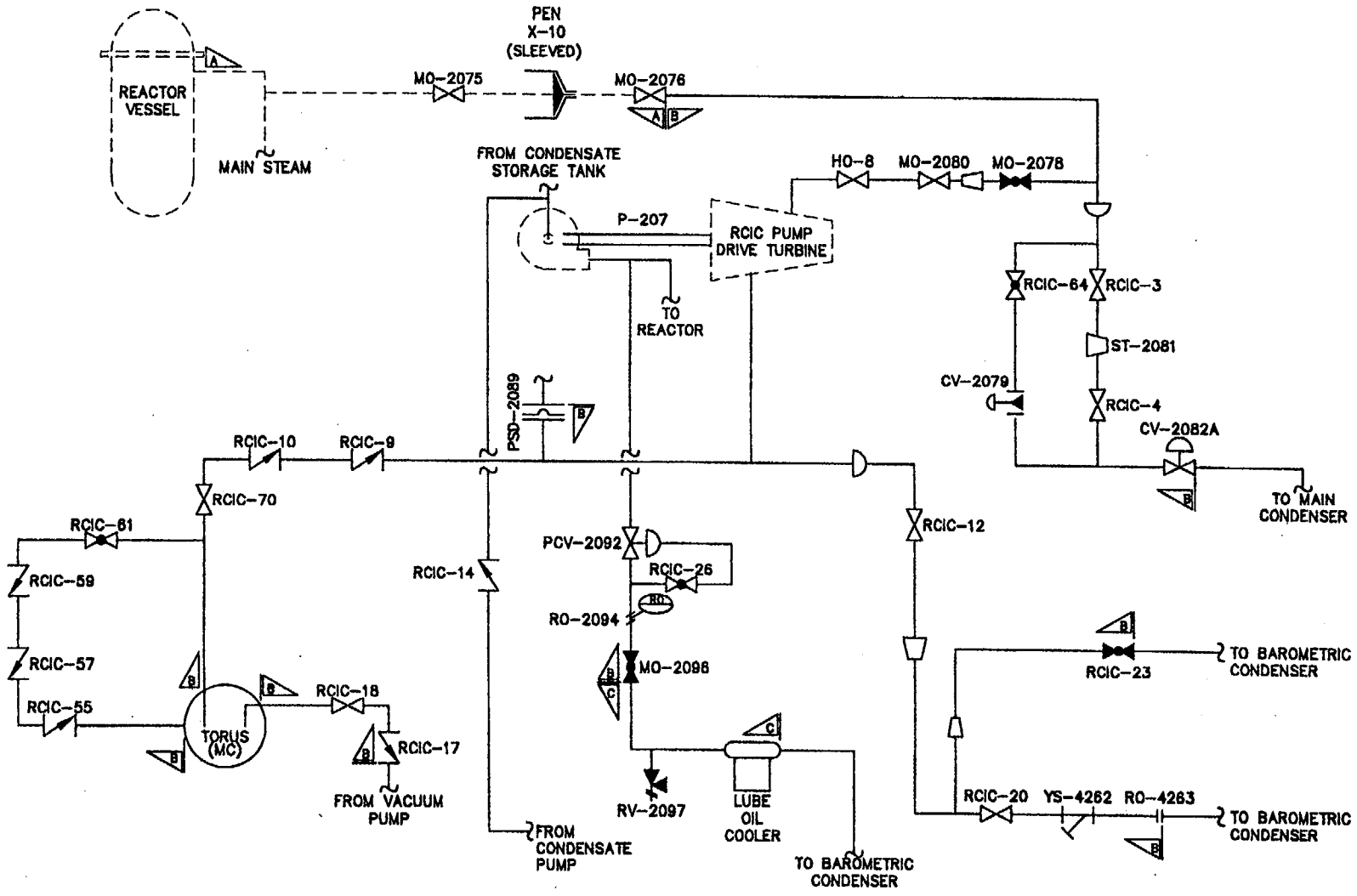

REF: NH-36251

FILE NO: 10

NSP (M&SP)- MONTICELLO ISI

DWN: CADWorks CHKD: DSW APPD: DSW

SYSTEM: RX CORE ISOLATION COOLING (STEAM SIDE)

LINE:

DWG: 1.5-10 REV: 01

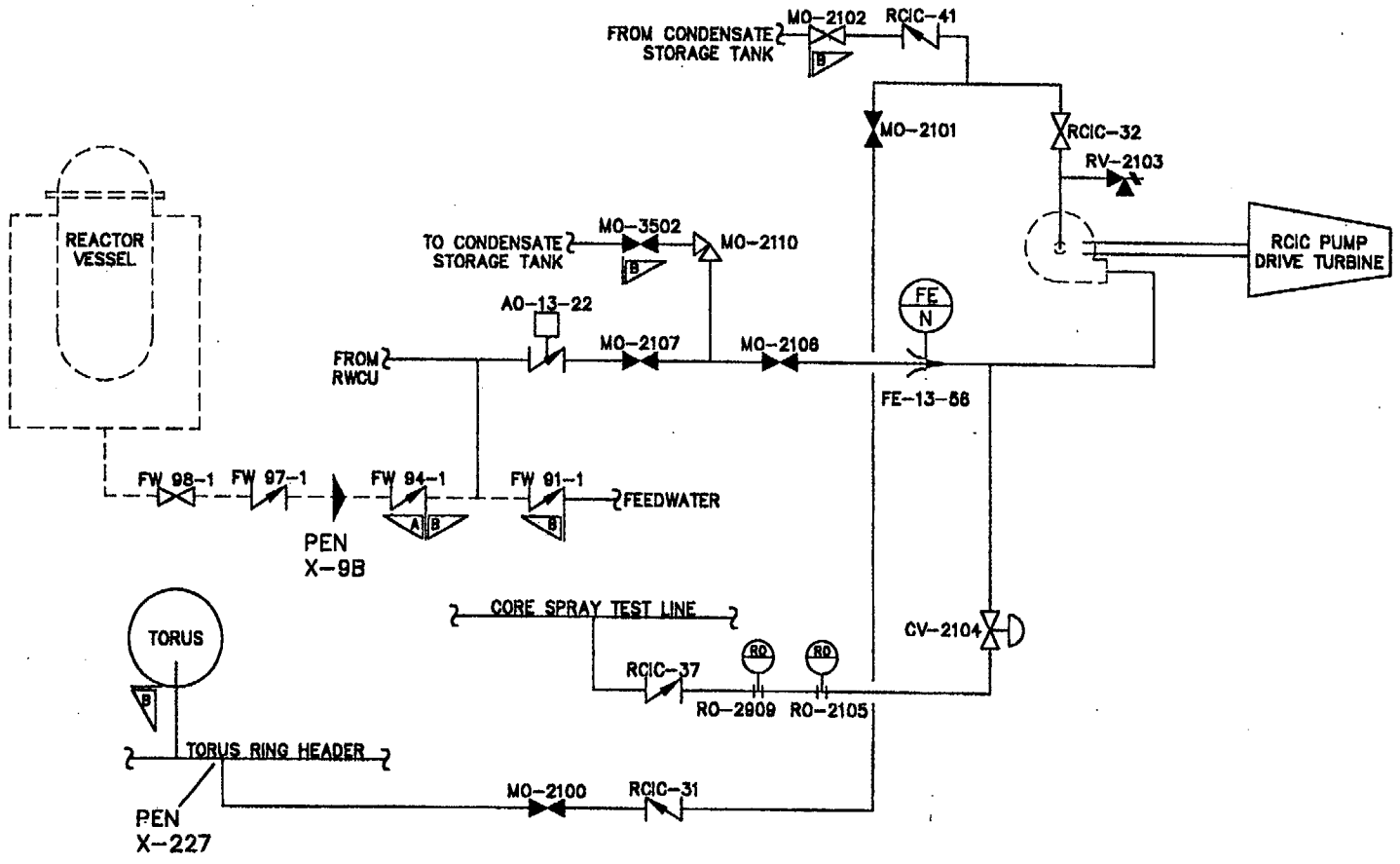

REF: NH-36252

FILE NO:	11
NSP (M&SP)– MONTICELLO	ISI
DWN: TJH CHKD: DSW APPD: DSW	
SYSTEM: REACTOR CORE ISOLATION COOLING (WATER SIDE)	
LINE:	
DWG: 1.5-11	REV: 01

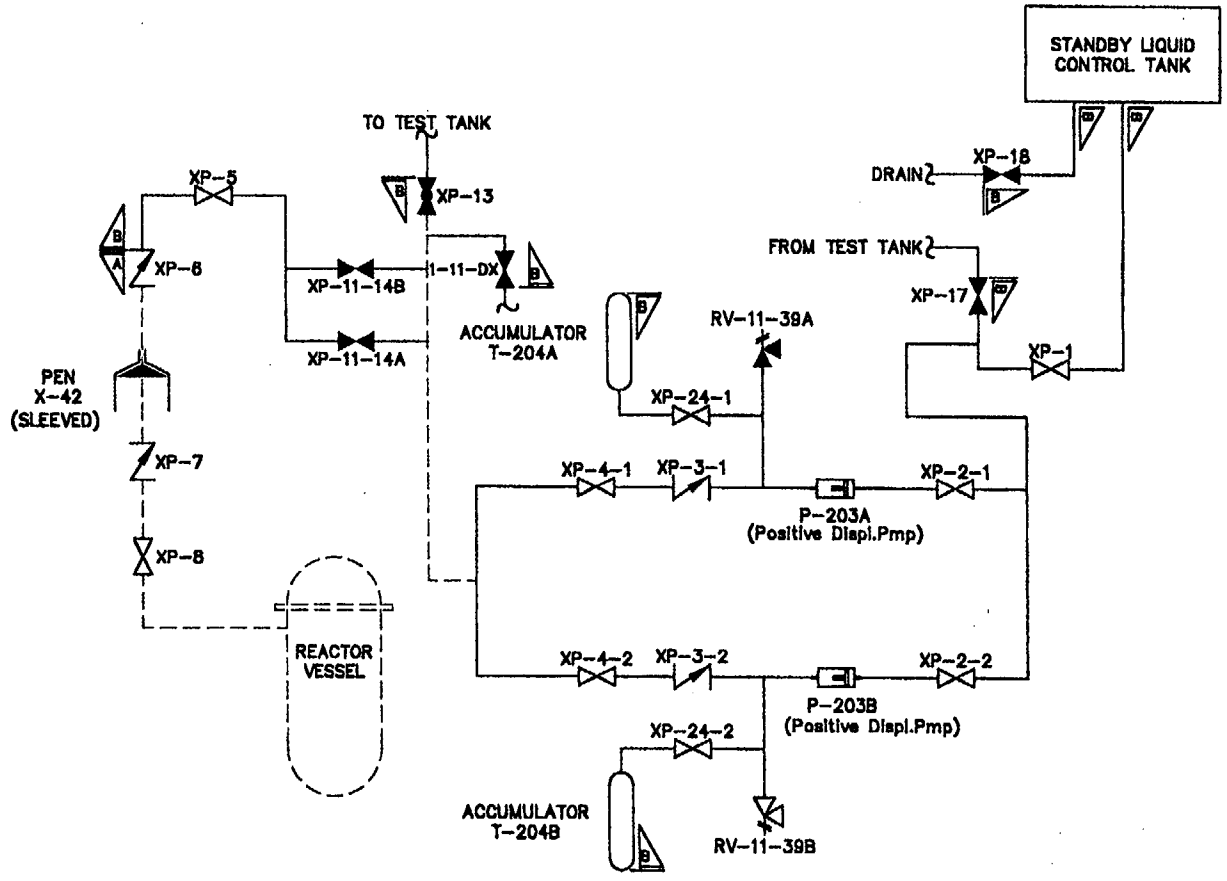

REF: NH-36253	FILE NO: 12
NSP (M&SP)– MONTICELLO	ISI
DWN: CADWorks CHKD:	APPD:
SYSTEM: STANDBY LIQUID CONTROL SYSTEM	
LINE:	
DWG: 1.5-12	REV: 01

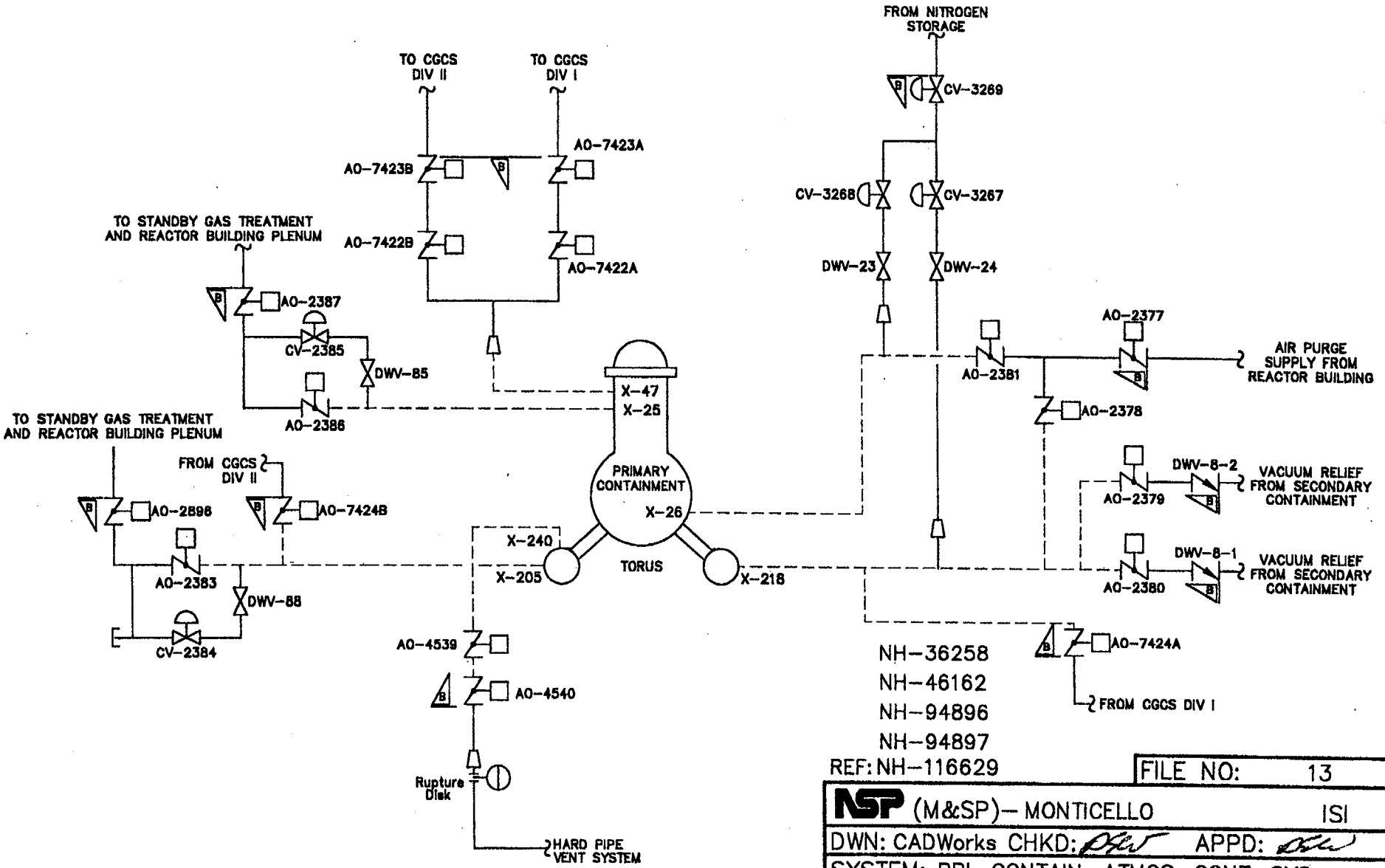

NH-36258
NH-46162
NH-94896
NH-94897
REF: NH-116629

FILE NO:	13
NSP (M&SP)– MONTICELLO	ISI
DWN: CADWorks CHKD:	APPD:
SYSTEM: PRI. CONTAIN. ATMOS. CONT. SYS.	
LINE:	
DWG: 1.5–13	REV: 01

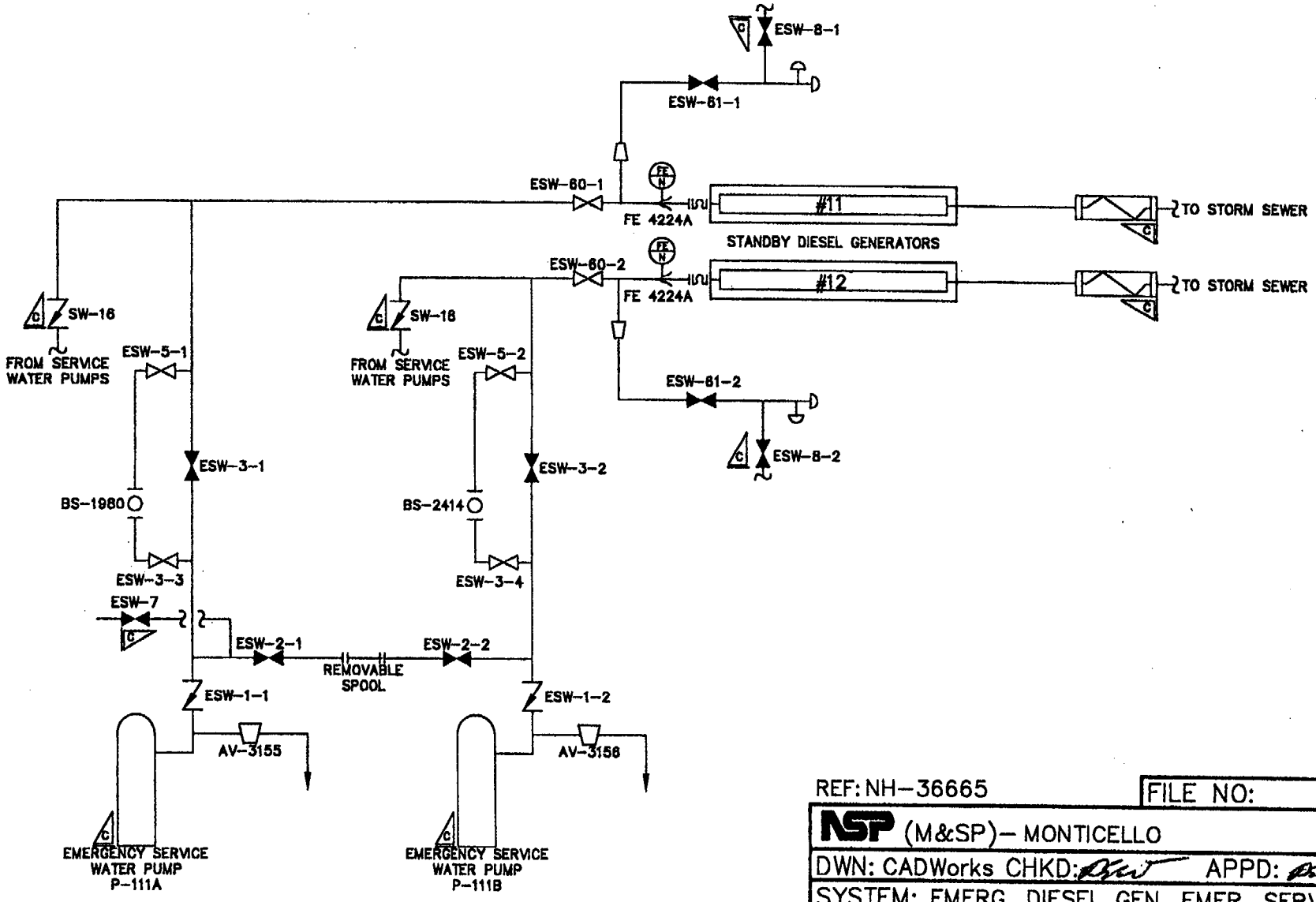

REF: NH-36665

FILE NO: 14

NSP (M&SP)- MONTICELLO ISI

DWN: CADWorks CHKD: APPD:

SYSTEM: EMERG. DIESEL GEN. EMER. SERV. WATER

LINE:

DWG: 1.5-14 REV: 01

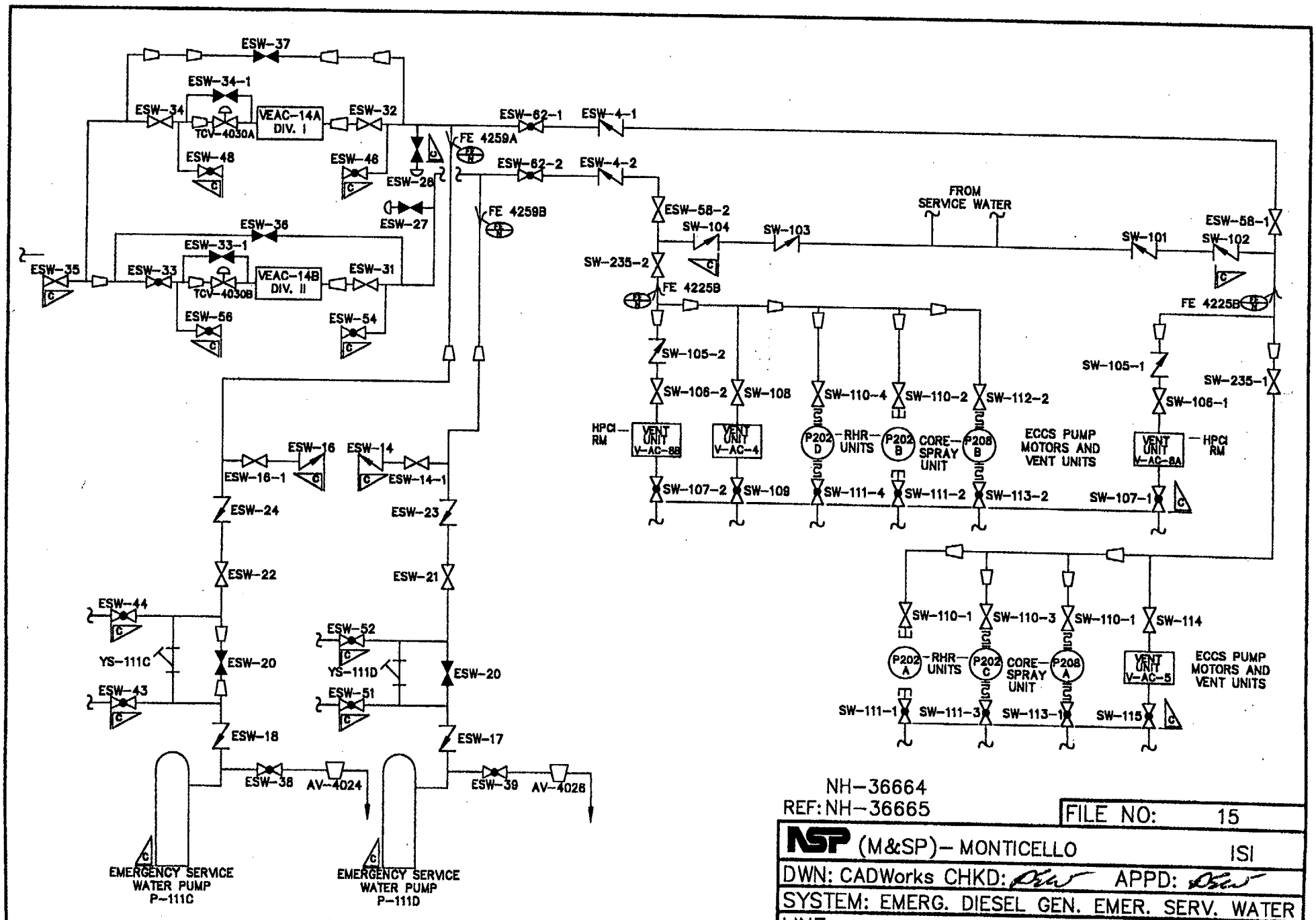

NH-36664
REF: NH-36665

FILE NO:	15
NSP (M&SP)– MONTICELLO	ISI
DWN: CADWorks CHKD:	APPD:
SYSTEM: EMERG. DIESEL GEN. EMER. SERV. WATER	
LINE:	
DWG: 1.5–15	REV: 01

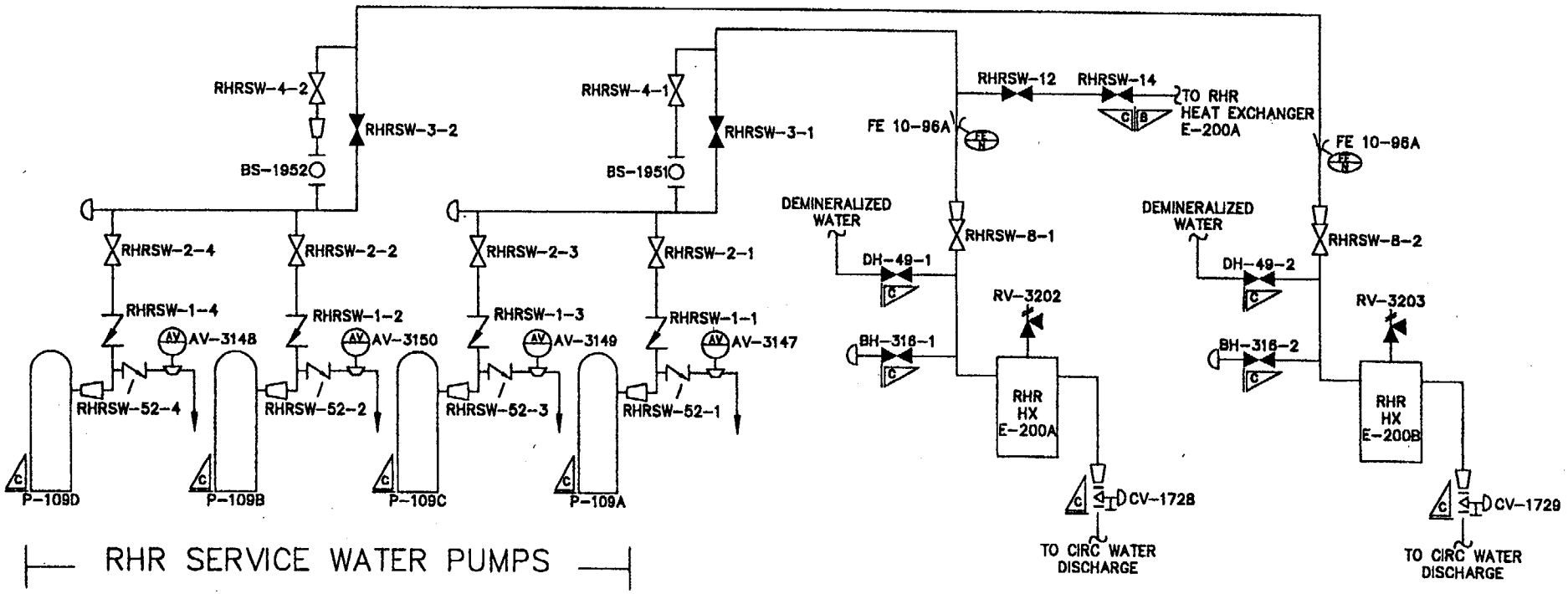

RHR SERVICE WATER PUMPS

NH-36664
REF: NH-36665

FILE NO:	16
NSP (M&SP)– MONTICELLO	ISI
DWN: CADWorks CHKD:	APPD:
SYSTEM: RHR SERVICE WATER	
LINE:	
DWG: 1.5–16	REV: 01

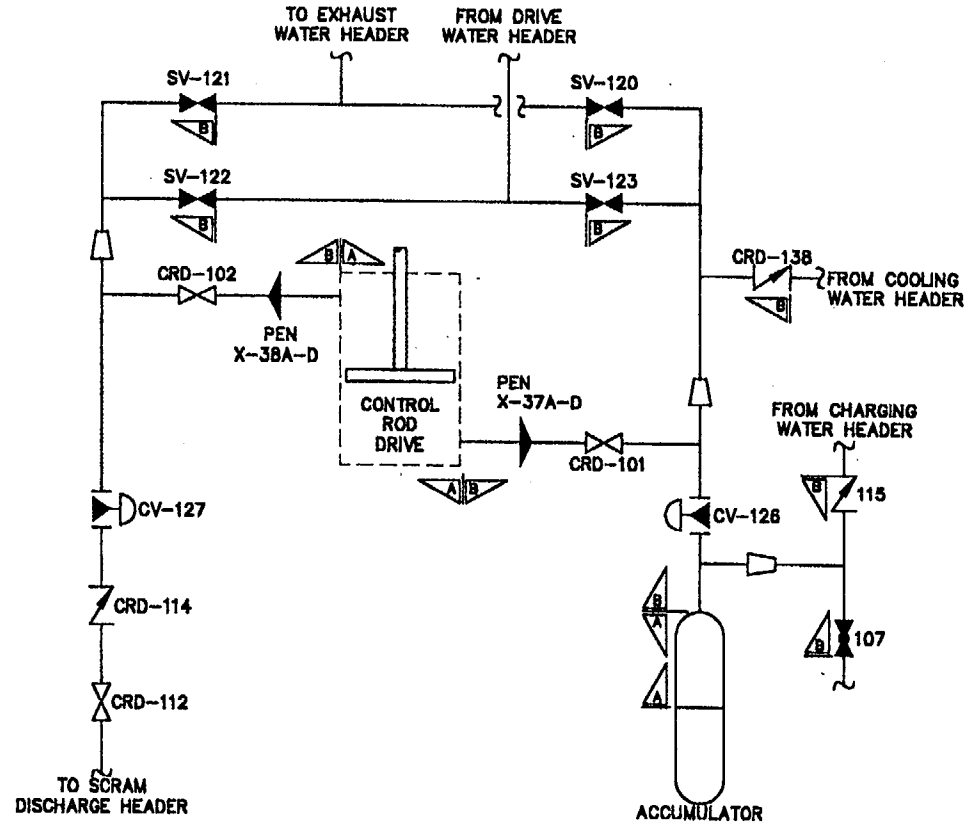

REF: NH-36245 | FILE NO: 17

NSP (M&SP)– MONTICELLO | ISI

DWN: CADWorks CHKD: DSW APPD: DSW

SYSTEM: HYDRAULIC CONTROL UNIT

LINE:

DWG: 1.5-17 | REV: 01

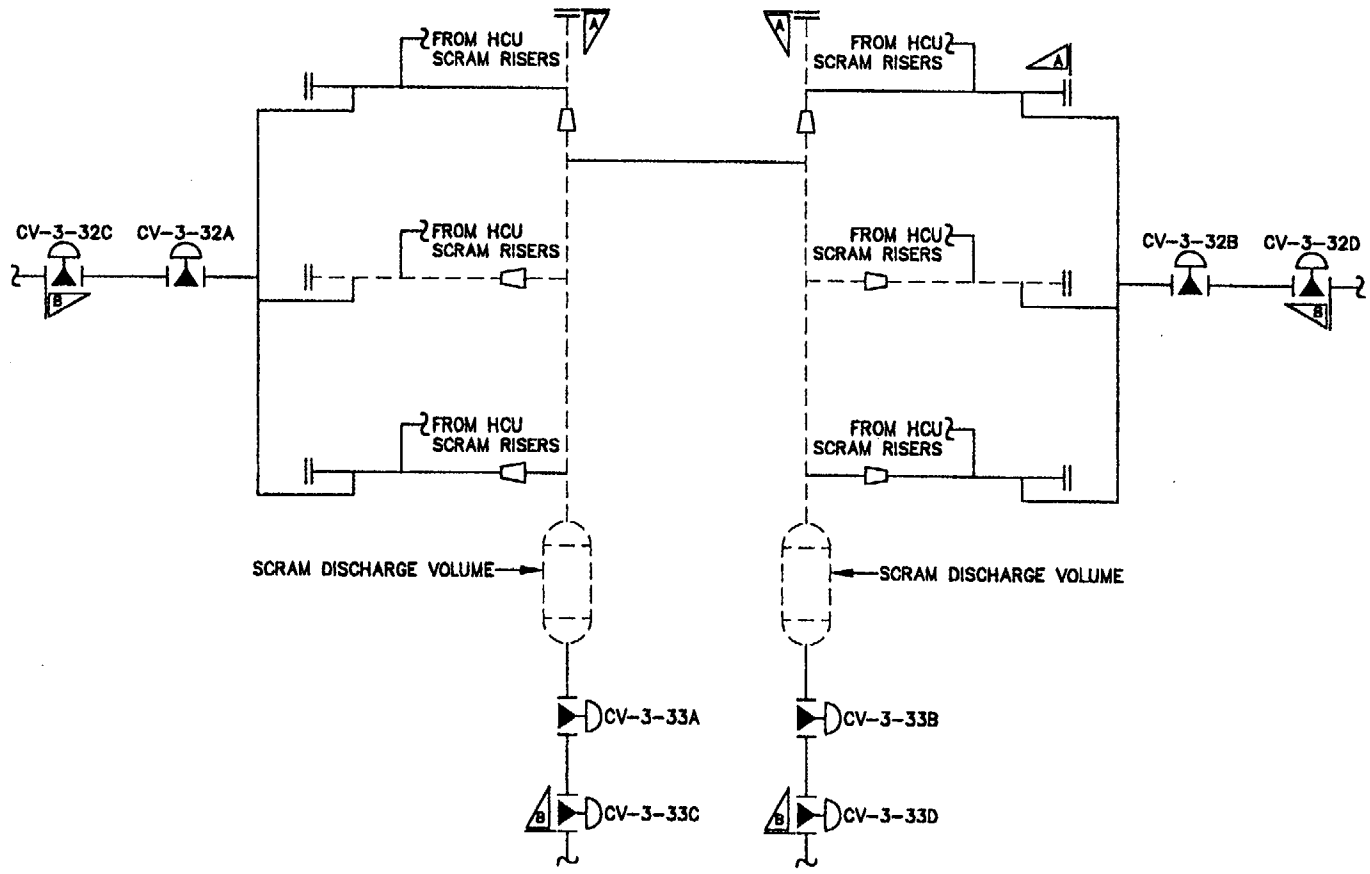

REF: NH-36245 | FILE NO: 18

NSP (M&SP)– MONTICELLO ISI

DWN: CADWorks CHKD: APPD:

SYSTEM: CONT. ROD DRIVE SYS. (SCRAM DISCH. PIPING)

LINE:

DWG: 1.5-18 | REV: 01

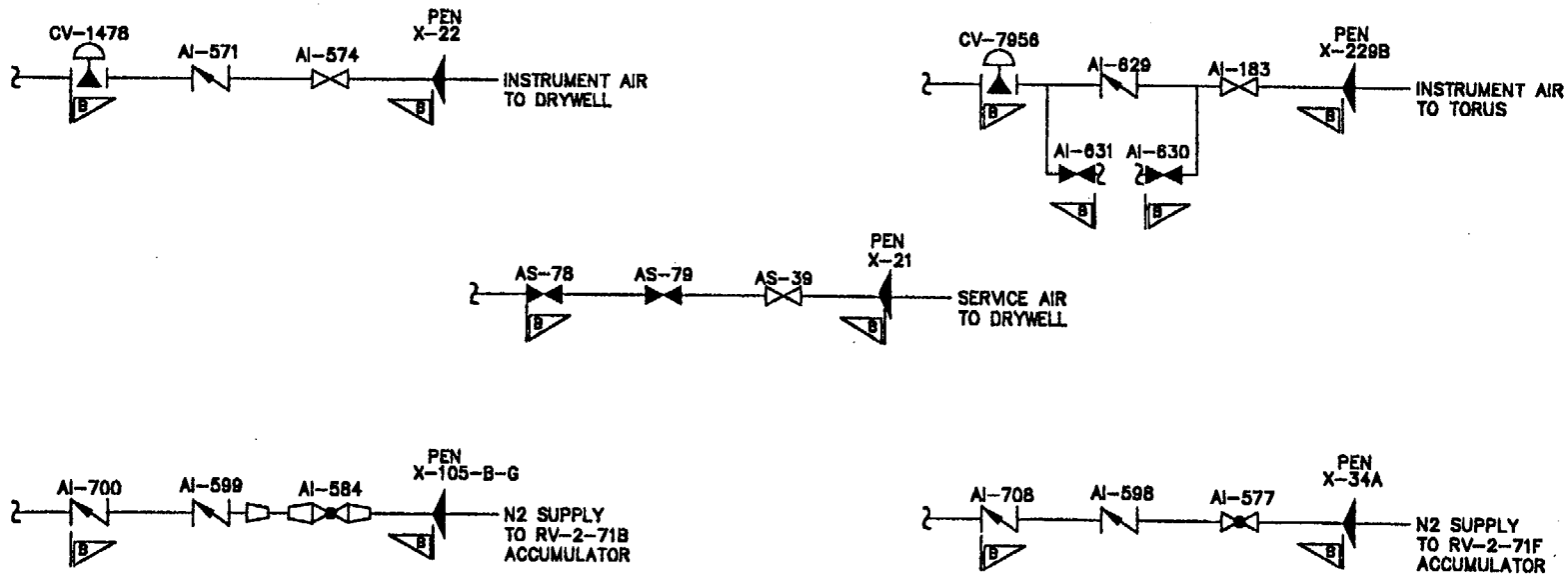

NH-36049-4
NH-36049-10
NH-36049-12
REF: NH-36049-14

FILE NO: 19	
NSP (M&SP)- MONTICELLO	ISI
DWN: CADWorks CHKD: DFW	APPD: DFW
SYSTEM: COMPRESSED AIR SYSTEM	
LINE:	
DWG: 1.5-19	REV: 01

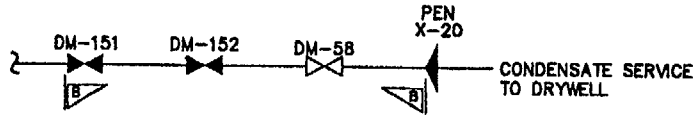

CONDENSATE SERVICE SYSTEM

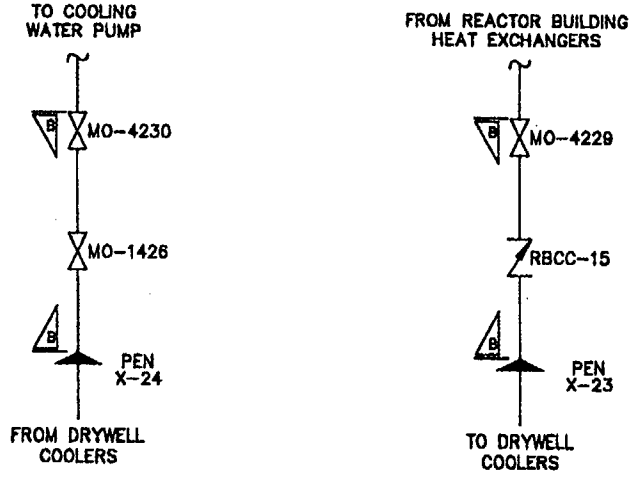

REACTOR BUILDING COOLING WATER SYSTEM

NH-36039
REF: NH-36042-2

FILE NO:	20
NSP (M&SP)– MONTICELLO	ISI
DWN: CADWorks CHKD: DSW APPD: DSW	
SYSTEM: CONDENSATE SERVICE & RX BLDG CW	
LINE:	
DWG: 1.5-20	REV: 01

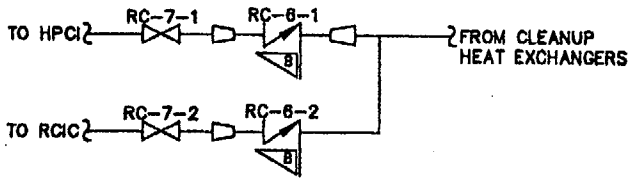

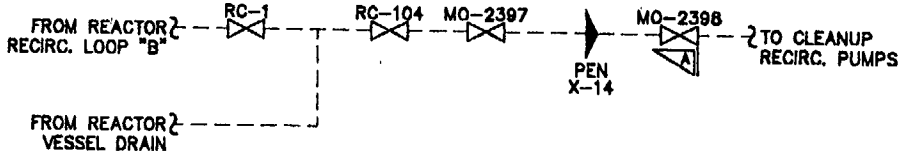

REACTOR WATER CLEAN-UP SYSTEM

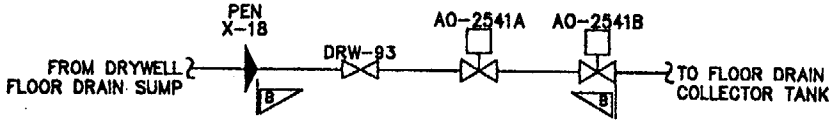

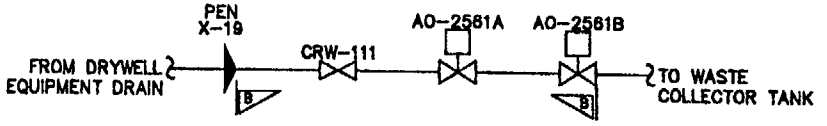

LIQUID RADWASTE

NH-36043
NH-36044
REF: NH-36254

FILE NO:	21
NSP (M&SP)– MONTICELLO	ISI
DWN: CADWorks CHKD: DSW	APPD: DSW
SYSTEM: RX WTR CLEAN-UP & LIQUID RADWASTE	
LINE:	
DWG: 1.5-21	REV: 01

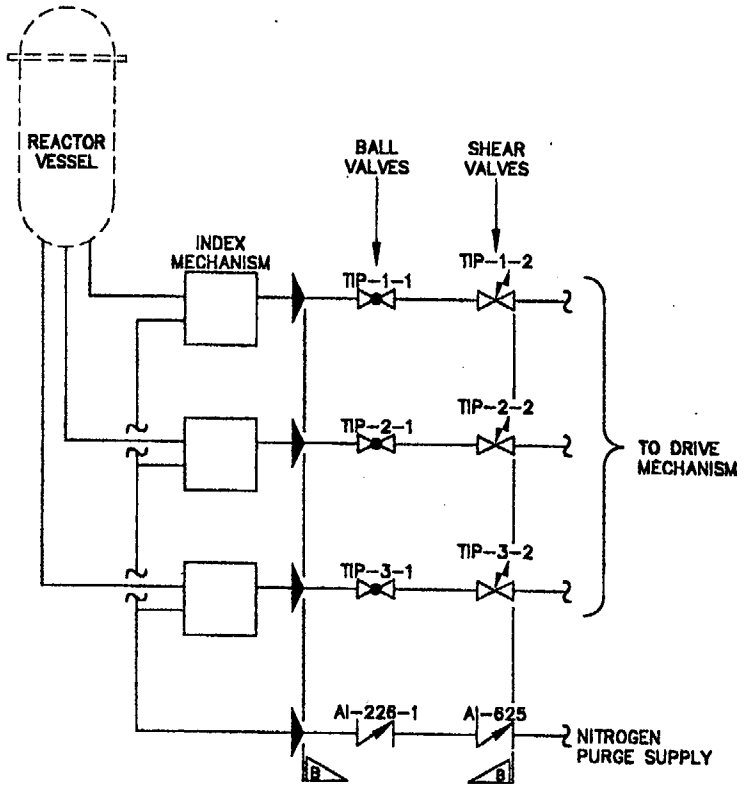

REF:

FILE NO: 22

NSP (M&SP)– MONTICELLO ISI

DWN: CADWorks CHKD: APPD:

SYSTEM: TRAVERSING IN–CORE PROBE SYSTEM

LINE:

DWG: 1.5–22 REV: 01

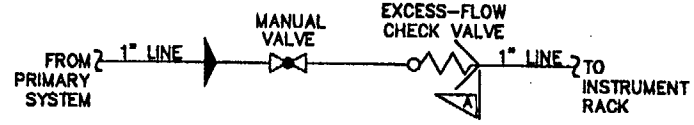

TYPICAL FOR EXCESS-FLOW CHECK VALVES EXCEPT
EXCESS-FLOW CHECK VALVE FOR PENETRATION X-28F

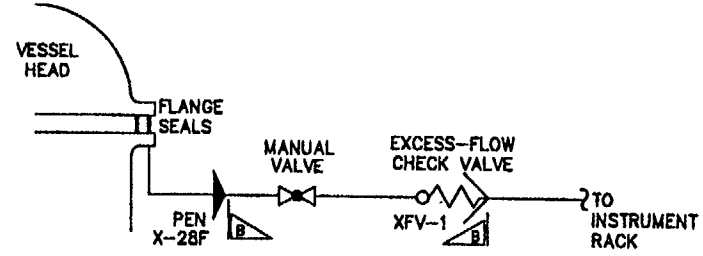

EXCESS-FLOW CHECK VALVE
FOR PENETRATION X-28F

NH-36241
REF: NH-36242

FILE NO:	23
NSP (M&SP)- MONTICELLO	ISI
DWN: CADWorks CHKD: APPD:	
SYSTEM: EXCESS-FLOW CHECK VALVES	
LINE:	
DWG: 1.5-23	REV: 01

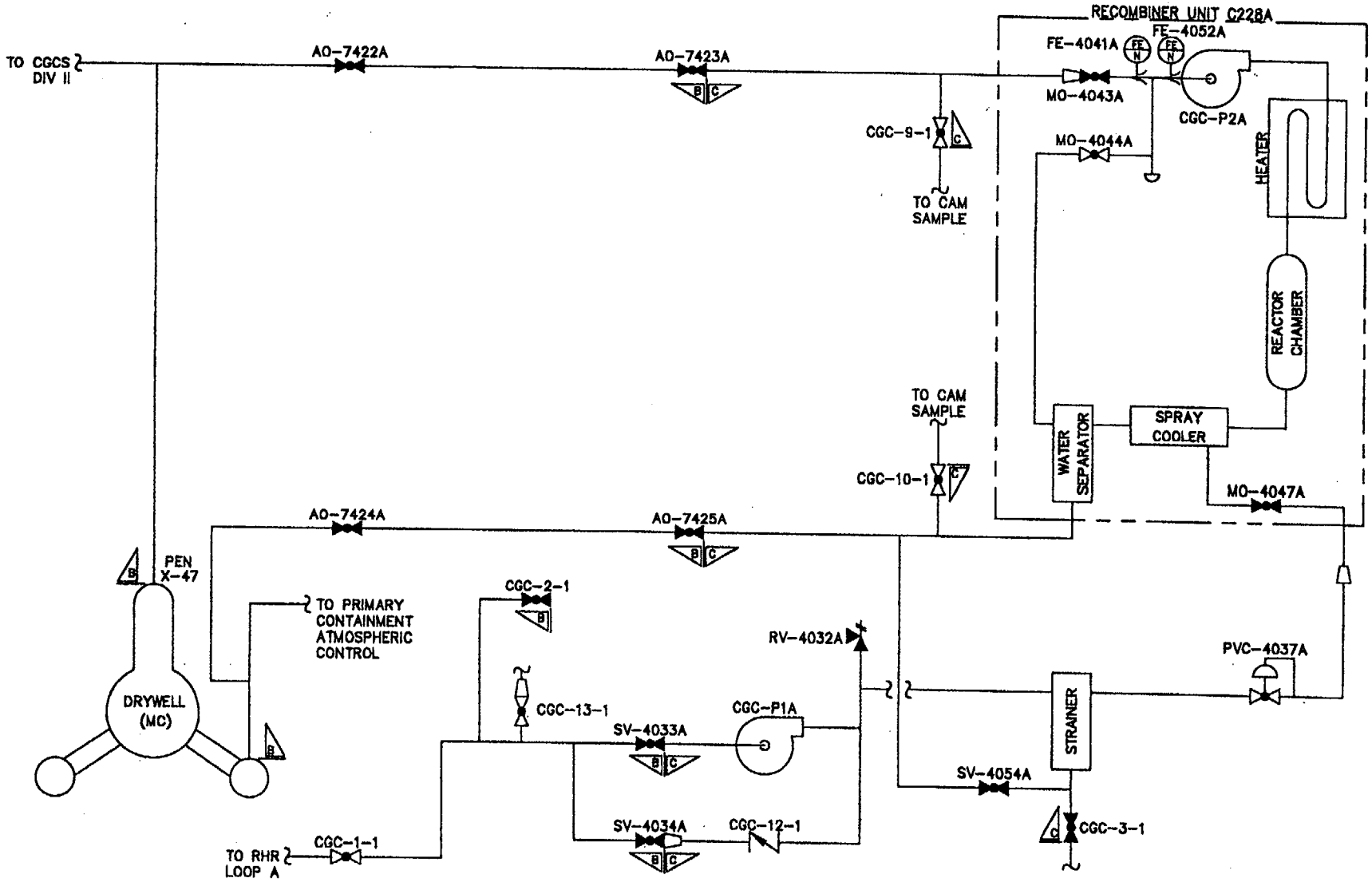

REF: NH-94896

FILE NO: 24

NSP (M&SP) – MONTICELLO ISI

DWN: CADWorks CHKD: DSW APPD: DSW

SYSTEM: COMBUSTIBLE GAS CONTROL, DIVISION 1

LINE:

DWG: 1.5-24 REV: 01

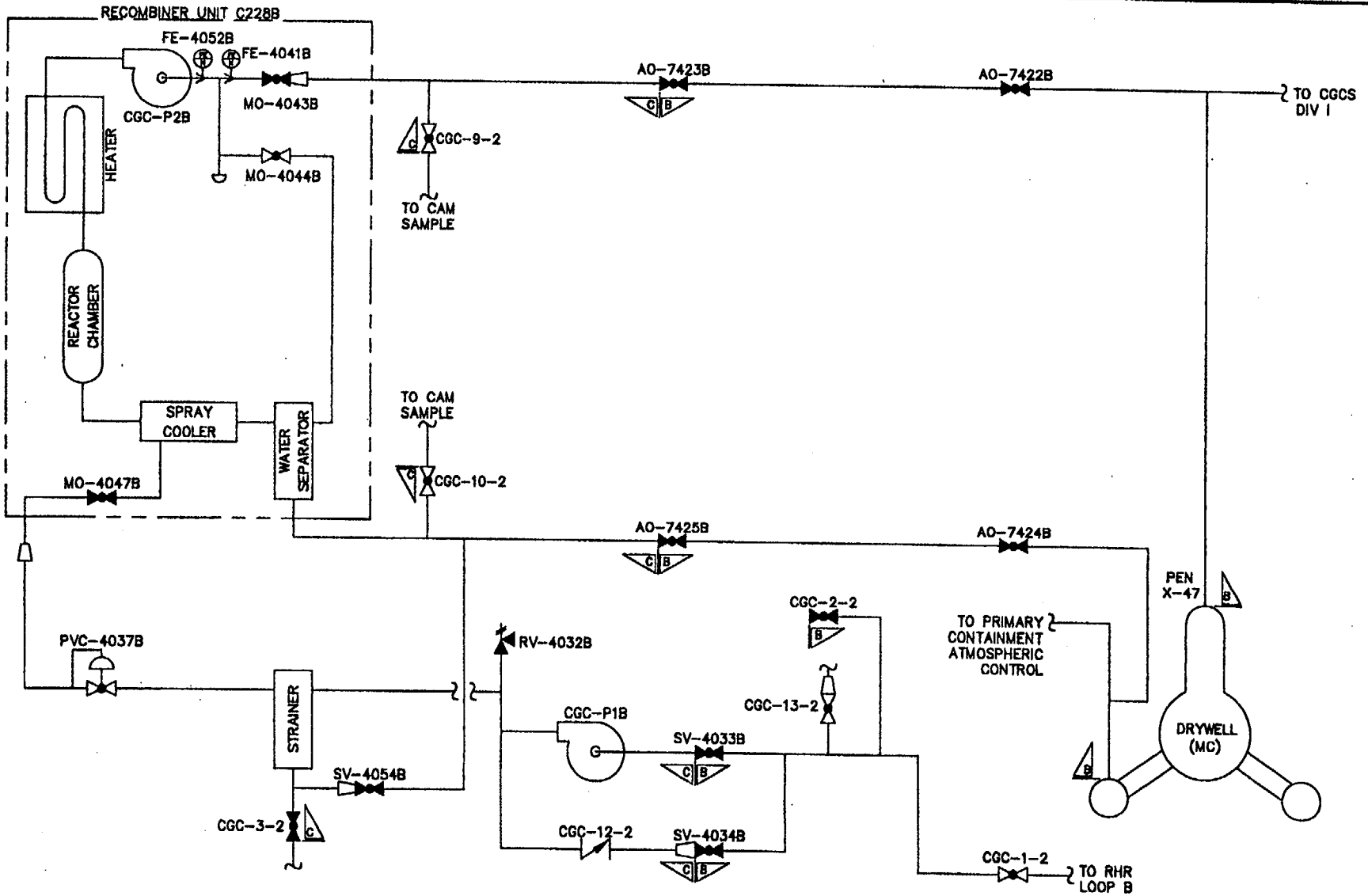

REF: NH-94897

FILE NO: 25

NSP (M&SP)– MONTICELLO ISI

DWN: CADWorks CHKD: DSW APPD: DSW

SYSTEM: COMBUSTIBLE GAS CONTROL, DIVISION II

LINE:

DWG: 1.5-25 REV: 01

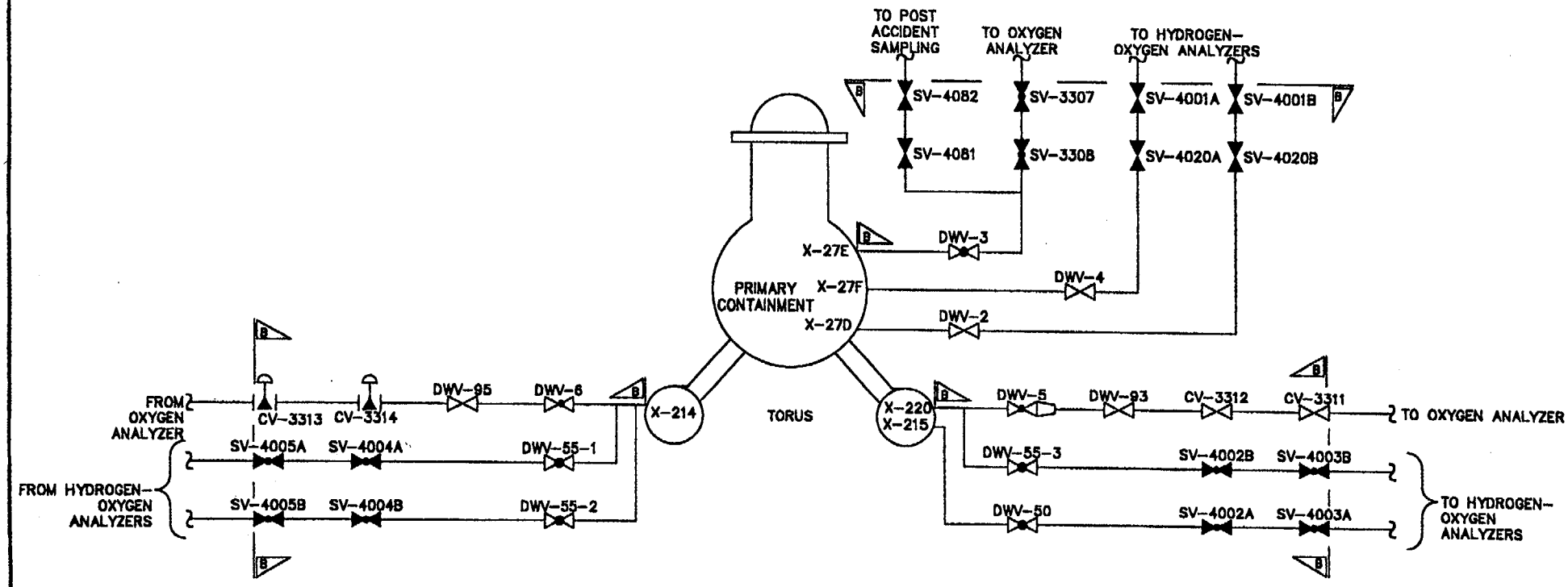

NH-46162
NH-91197
REF: NH-96042-1

FILE NO:	26
NSP (M&SP)- MONTICELLO	ISI
DWN: CADWorks CHKD:	APPD:
SYSTEM: PRIMARY CONTAINMENT SAMPLING SYSTEMS	
LINE:	
DWG: 1.5-26	REV: 01

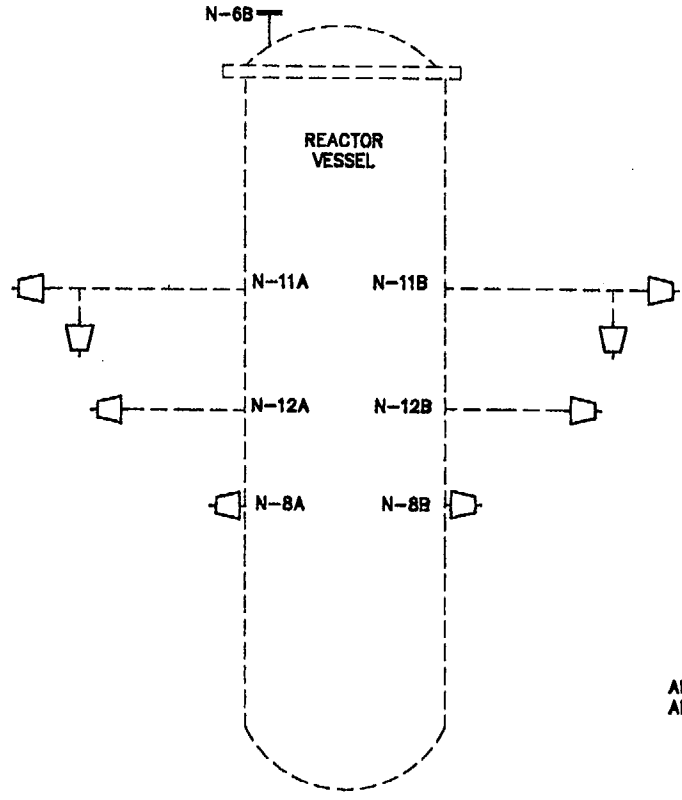

ALL BOUNDRIES SHOWN ARE QUALITY GROUP A

REF: NH-36242	FILE NO: 27
NSP (M&SP)- MONTICELLO	ISI
DWN: CADWorks CHKD: DSW APPD: DSW	
SYSTEM: REACTOR VESSEL INSTRUMENTATION	
LINE:	
DWG: 1.5-27	REV: 01

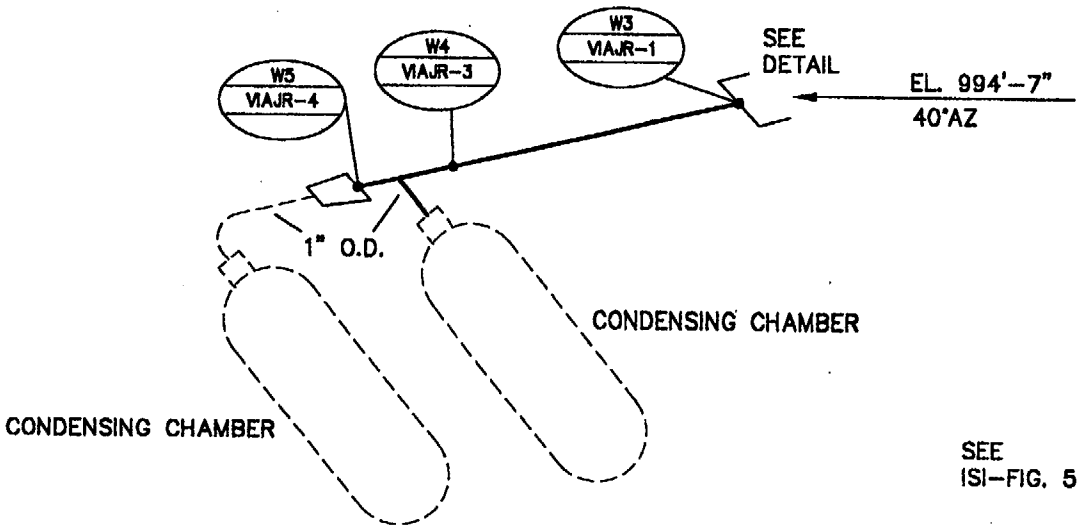

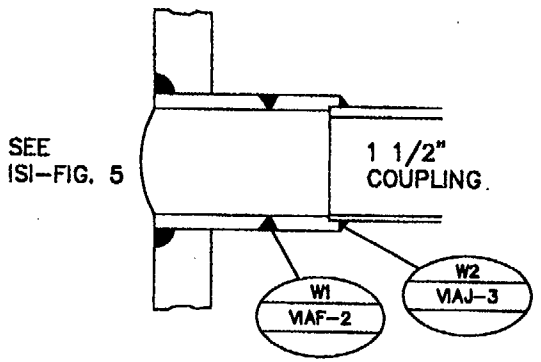

DETAIL

ISI / GE / CONST. = WELD NO.

NOTE: LOCATED IN DRYWELL

REF: NF-97008	FILE NO:
NSP (M&SP)- MONTICELLO	ISI
DWN: TJH CHKD: DSW APPD: DSW	
SYSTEM: RX INST. NOZZLE N-11A	
LINE: RLM1-1/2"-DCA	
DWG: ISI-97008-A	REV: 03

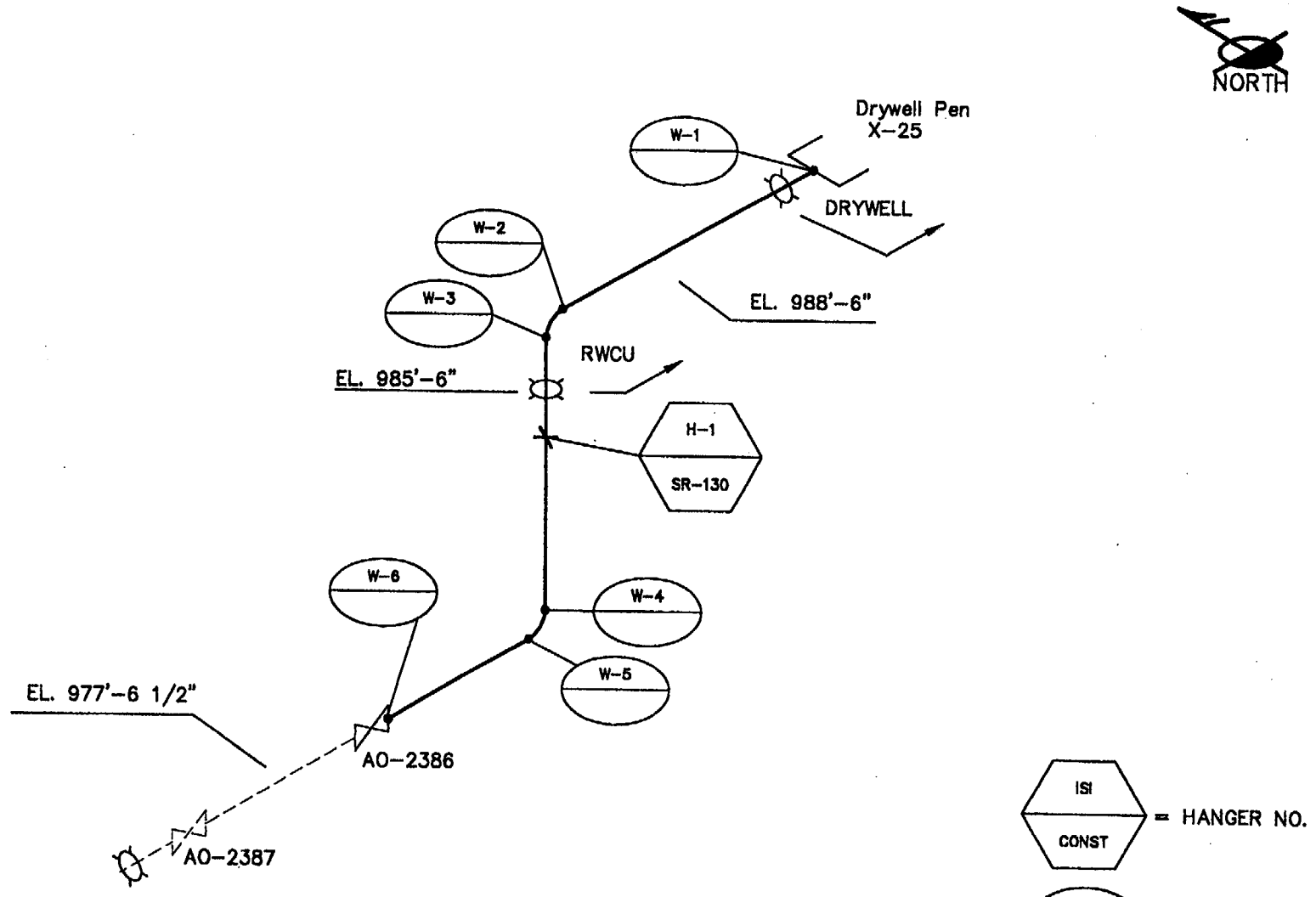

NH-91230
NH-36258
REF: NH-105531

FILE NO: 31531R00	
NSP (M&SP)- MONTICELLO	ISI
DWN: TJH CHKD: DEW APPD: DEW	
SYSTEM: STANDBY GAS TRTMNT & RX PLENUM	
LINE: CP2-18"-HE	
DWG: ISI-105531-A	REV: 0

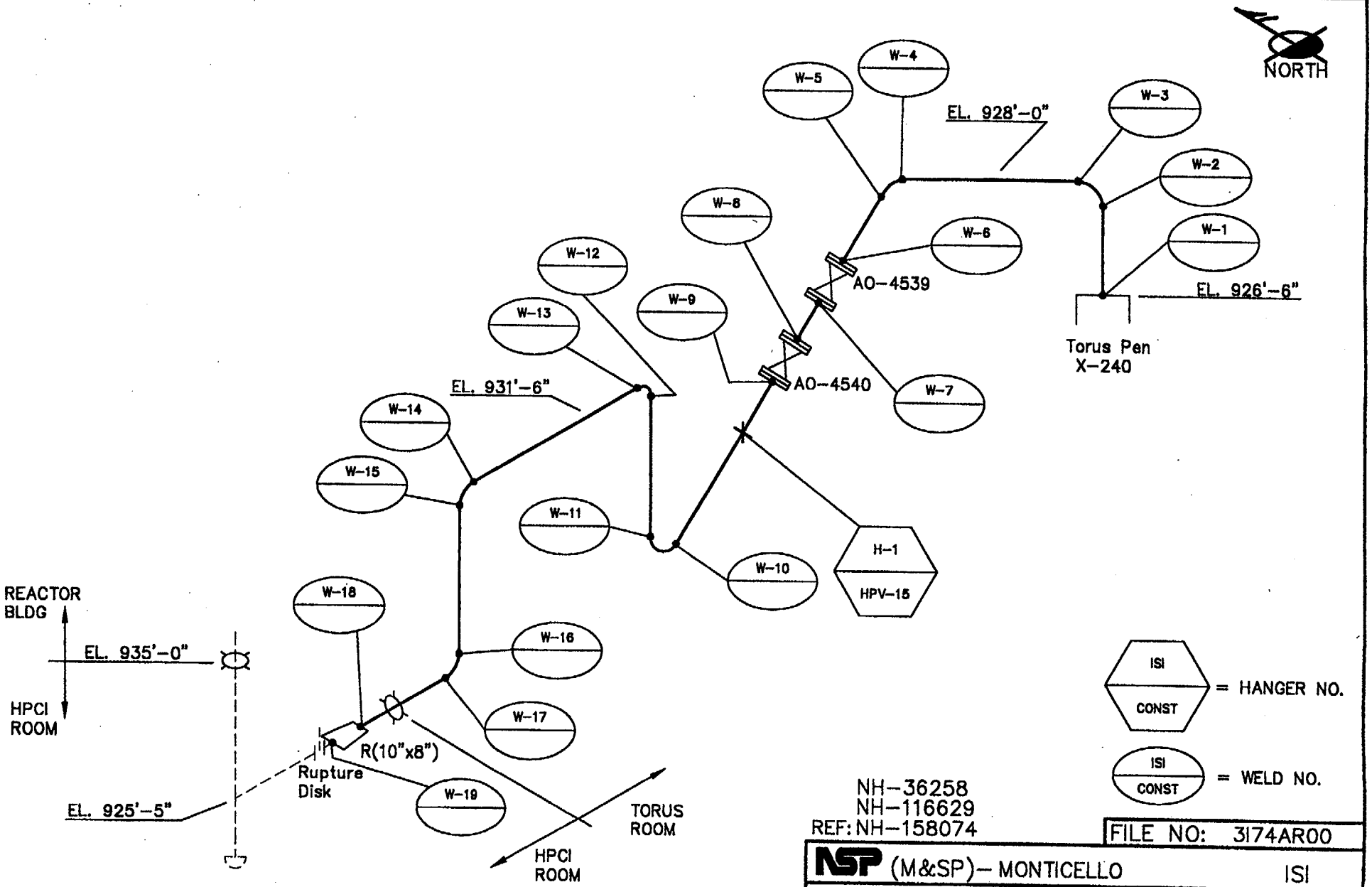

NH-36258
NH-116629
REF: NH-158074

FILE NO: 3174AR00

NSP (M&SP)- MONTICELLO	ISI
DWN: TJH CHKD: APPD:	
SYSTEM: TORUS HARD PIPE VENT	
LINE: HPV-8"-HE	
DWG: ISI-158074-A	REV: 0

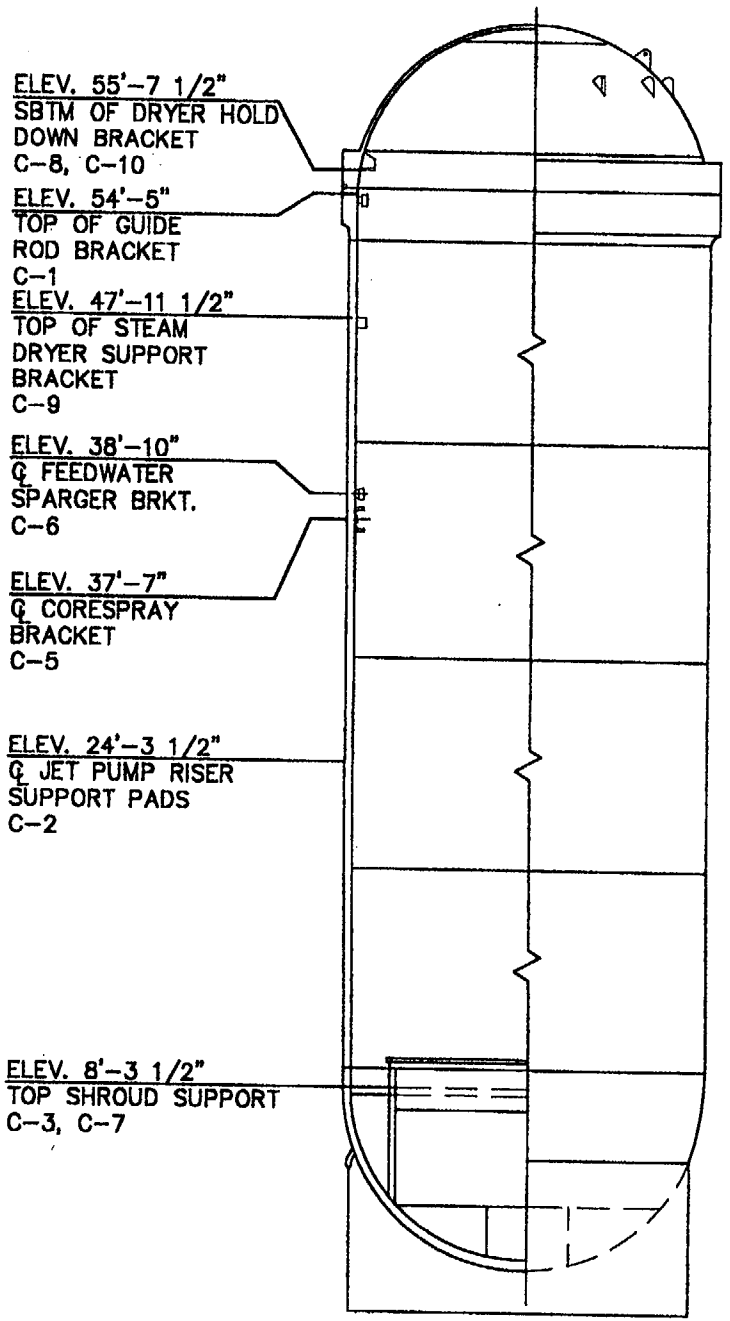

ELEVATION VIEW

REF:

FILE NO:

NSP (M&SP)– MONTICELLO ISI

DWN: CADWorks CHKD: RAD APPD: DMT

SYSTEM: RX VESSEL INTERIOR

LINE: N/A

DWG: ISI FIG. 0 REV: 02

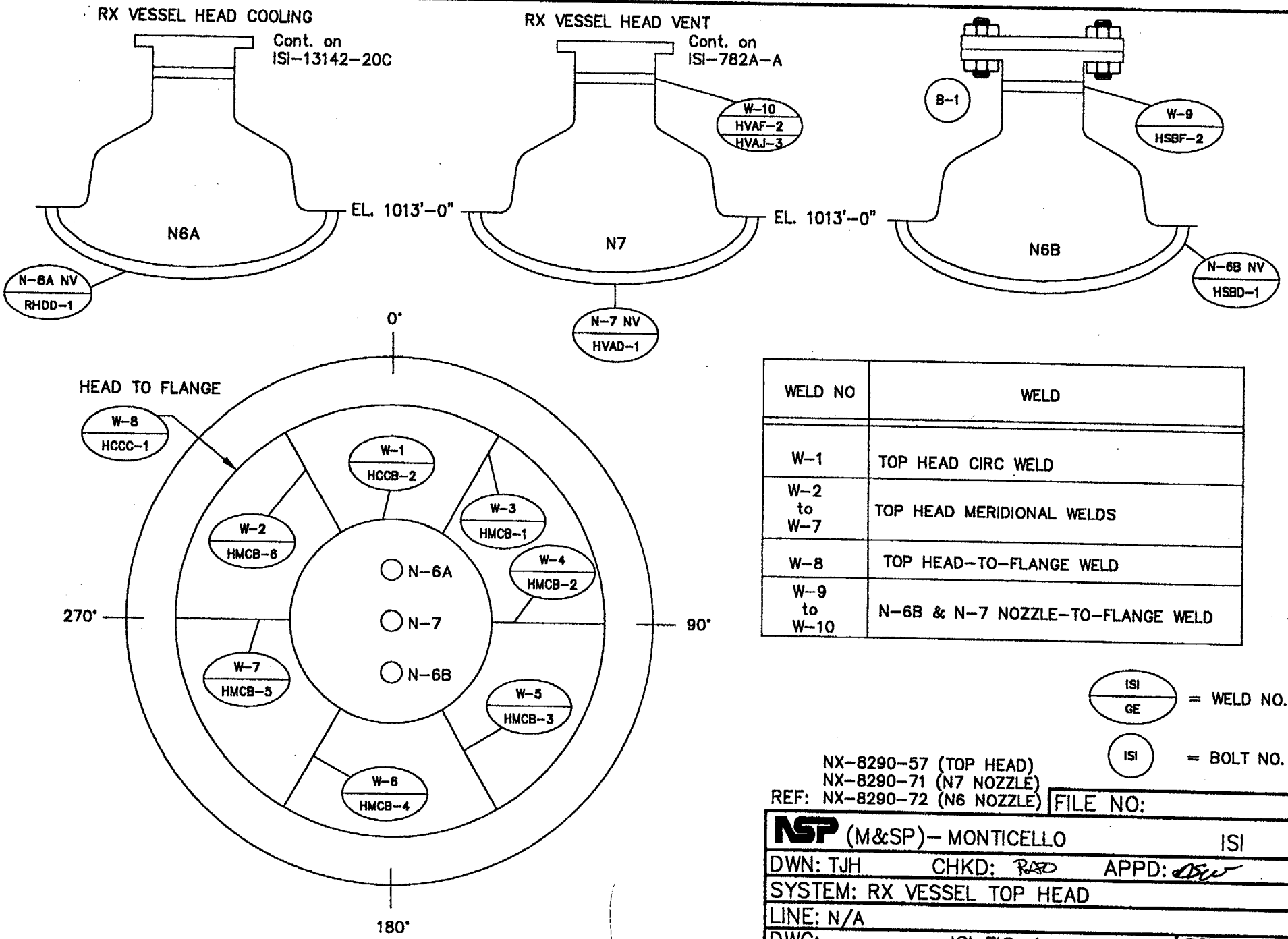

WELD NO	WELD
W-1	TOP HEAD CIRC WELD
W-2 to W-7	TOP HEAD MERIDIONAL WELDS
W-8	TOP HEAD-TO-FLANGE WELD
W-9 to W-10	N-6B & N-7 NOZZLE-TO-FLANGE WELD

ISI / GE = WELD NO.

ISI = BOLT NO.

REF: NX-8290-57 (TOP HEAD)
NX-8290-71 (N7 NOZZLE)
NX-8290-72 (N6 NOZZLE)

FILE NO:

NSP (M&SP)- MONTICELLO ISI

DWN: TJH CHKD: RAD APPD:

SYSTEM: RX VESSEL TOP HEAD

LINE: N/A

DWG: ISI FIG. 1 REV: 03

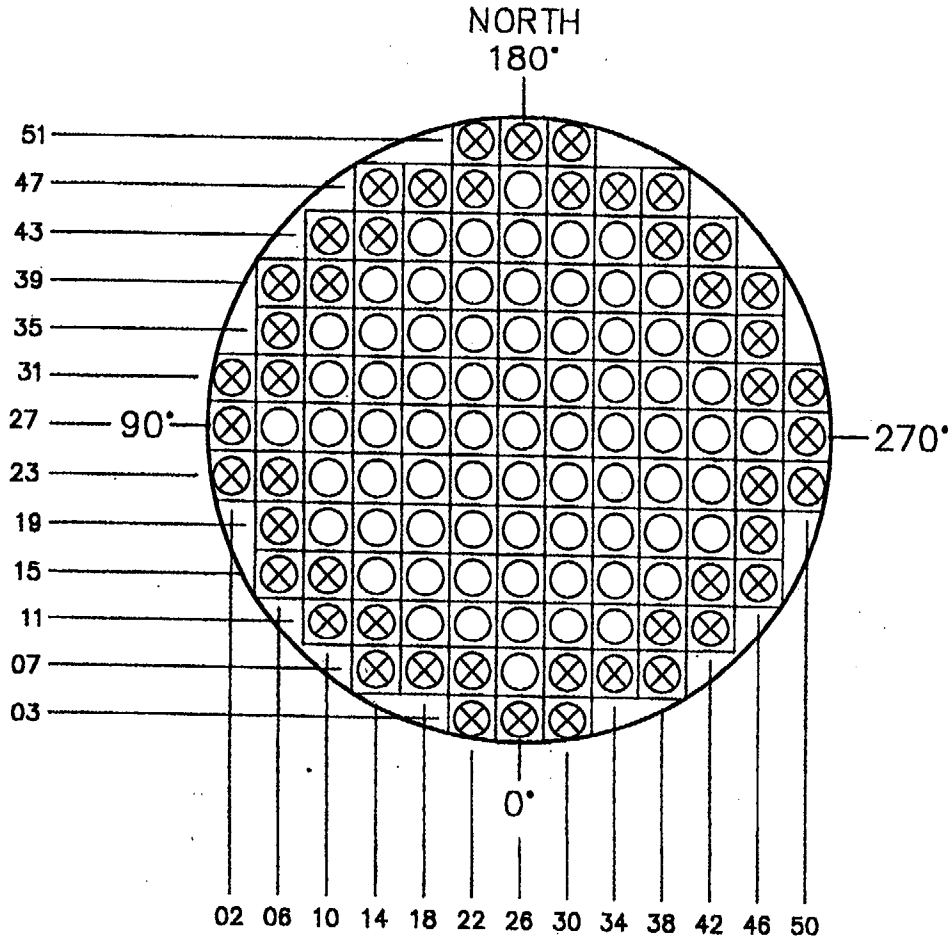

VIEW LOOKING DOWN

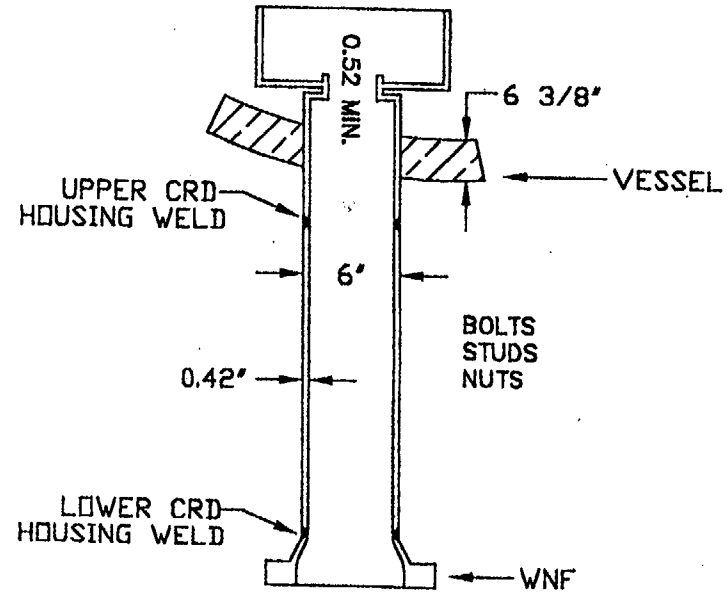

CONTROL ROD DRIVE LOCATION & HOUSING WELD
(TYPICAL)

REF: NX-7831-471	FILE NO:
NSP (M&SP) – MONTICELLO	ISI
DWN: CADWorks CHKD: RAD	APPD:
SYSTEM: CRD LOCATION RX VESSEL	
LINE: N/A	
DWG: ISI FIG. 2	REV: 03

STANDBY LIQUID CONTROL
Cont. on ISI-74215-A

RX VESSEL BOTTOM HEAD DRAIN
Cont. on ISI-821-A

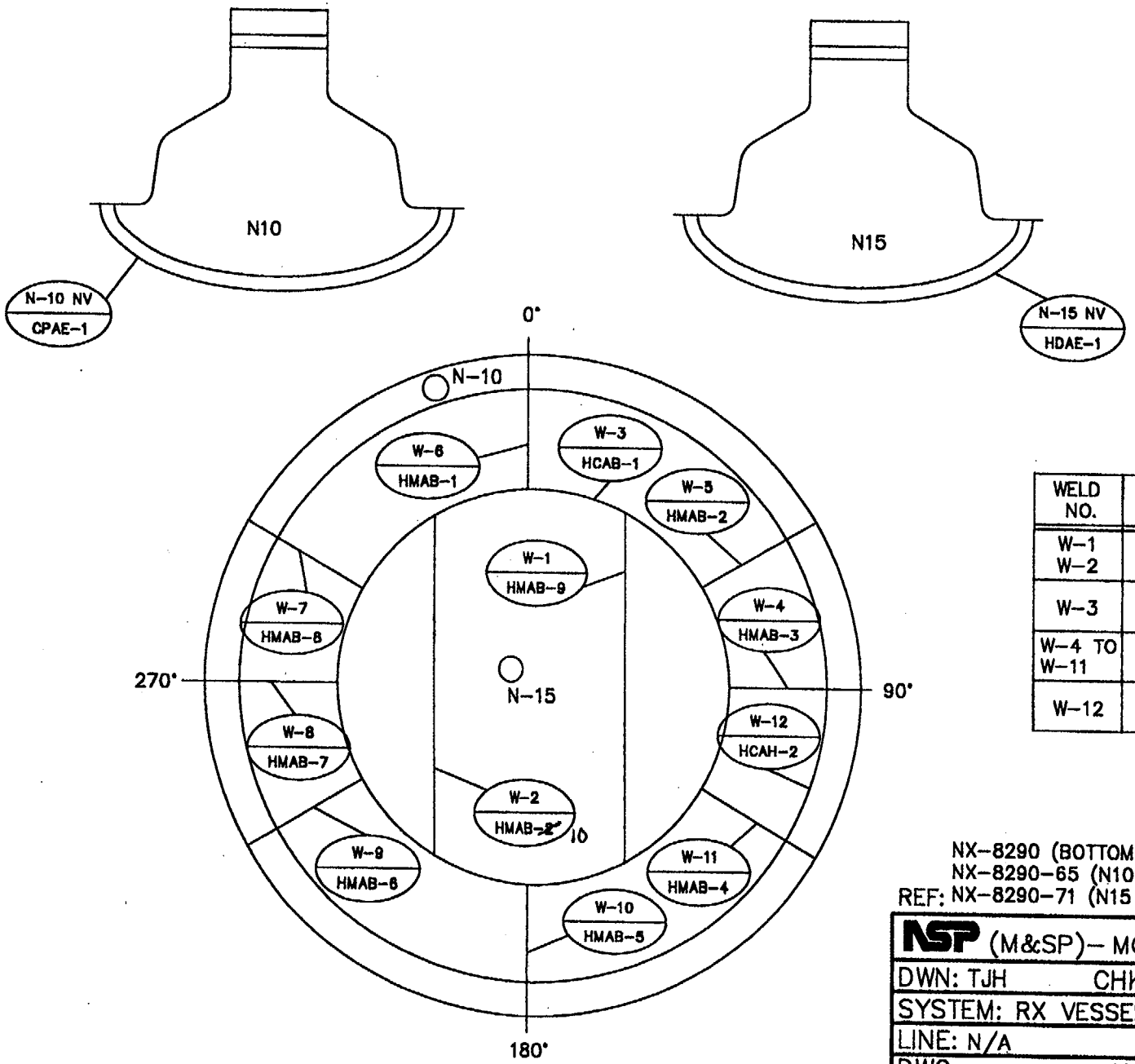

WELD NO.	WELD
W-1 W-2	BOTTOM HEAD DOLLAR PLATE SEAM WELD
W-3	BOTTOM HEAD DOLLAR PLATE TO SIDE PLATES
W-4 TO W-11	BOTTOM HEAD SIDE PLATES MERIDIONAL WELDS
W-12	BOTTOM HEAD SKIRT WELD

ISI / CONST = WELD NO.

NX-8290 (BOTTOM HEAD)
NX-8290-65 (N10 NOZZLE)
REF: NX-8290-71 (N15 NOZZLE)

FILE NO:

NSP (M&SP)- MONTICELLO ISI

DWN: TJH CHKD: ~~RAD~~ APPD: OKW

SYSTEM: RX VESSEL BOTTOM HEAD

LINE: N/A

DWG: ISI FIG. 3 REV: 03

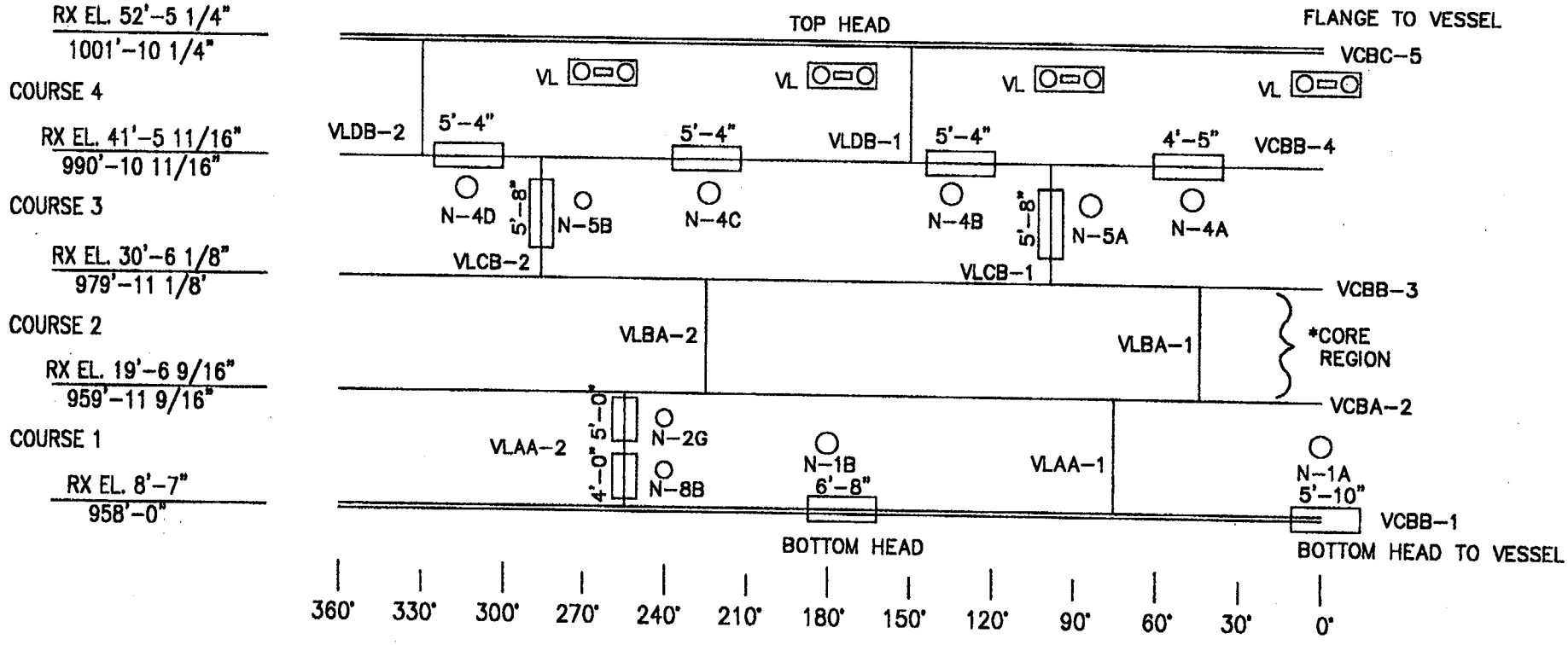

NOTES:

1. CIRC. * LONG. WELDS ACCESSIBLE THROUGH NOZZLE WINDOWS (APPX. LENGTH ACCESSIBLE AS SHOWN)
2. VL – VESSEL STABILIZER LUG
   INTEGRAL ATTACHMENT – – INACCESSIBLE (RR#2)

REF: NX-9310-11

FILE NO:

NSP (M&SP)– MONTICELLO ISI

DWN: TJH CHKD: RAD APPD:

SYSTEM: CIRC & LONG REACTOR VESSEL WELDS

LINE: N/A

DWG: ISI FIG.4 REV: 03

RX EL. 52'-5 1/4"
1001'-10 1/4"

COURSE 4

RX EL. 41'-5 11/16"
990'-10 11/16"

COURSE 3

RX EL. 30'-6 1/8"
979'-11 1/8"

COURSE 2

RX EL. 19'-6 9/16"
959'-11 9/16"

COURSE 1

RX EL. 8'-7"
958'-0"

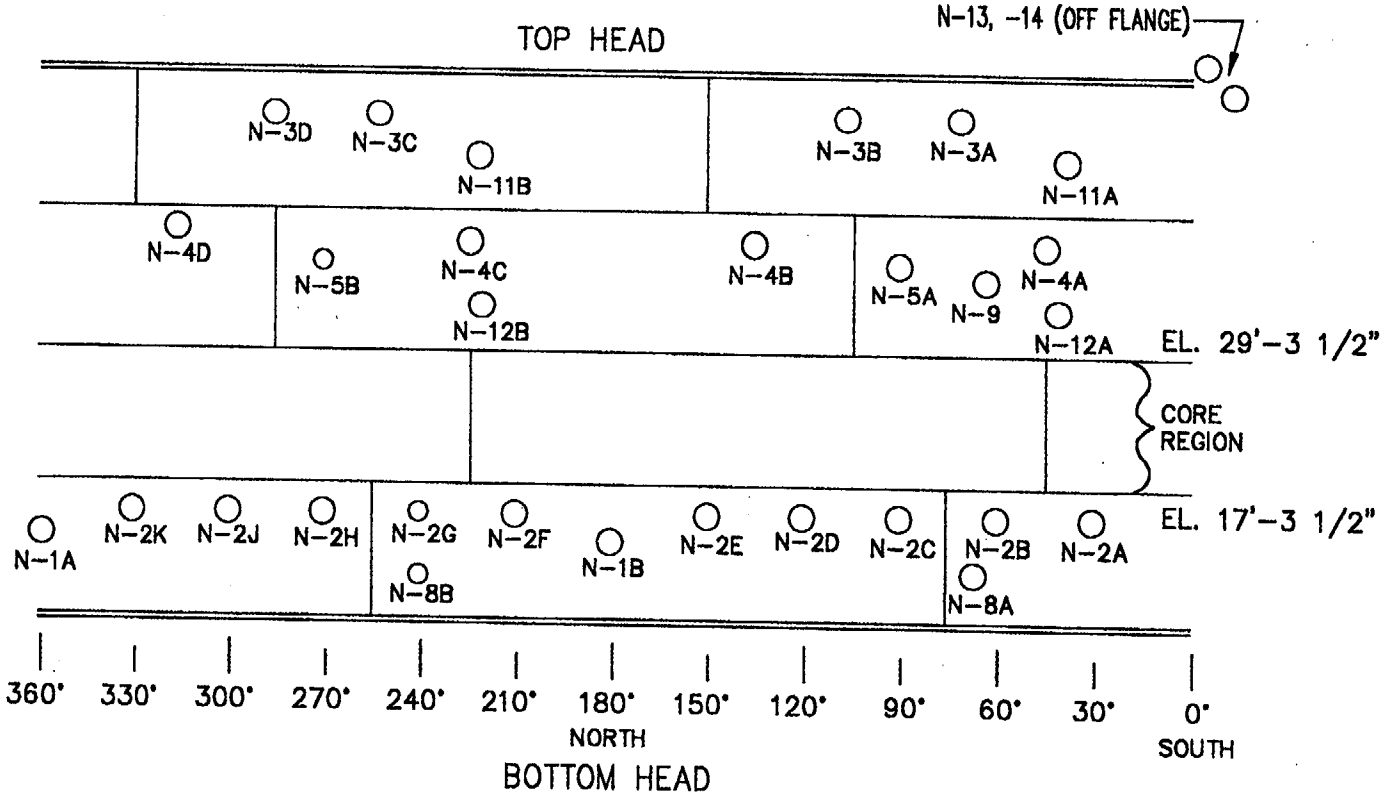

NOZZLE	WELD	SYSTEM	ISO #
N-1A	RCAD-1	Recirc Outlet	ISI-97005A
N-1B	RCBD-1	Recirc Outlet	ISI-97006A
N-2A	RRAD-1	Recirc Inlet	ISI-97006B
N-2B	RRBD-1	Recirc Inlet	ISI-97006B
N-2C	RRCD-1	Recirc Inlet	ISI-97006B
N-2D	RRDD-1	Recirc Inlet	ISI-97006B
N-2E	RRED-1	Recirc Inlet	ISI-97006B
N-2F	RRFD-1	Recirc Inlet	ISI-97005B
N-2G	RRGD-1	Recirc Inlet	ISI-97005B
N-2H	RRHD-1	Recirc Inlet	ISI-97005B
N-2J	RRJD-1	Recirc Inlet	ISI-97005B
N-2K	RRKD-1	Recirc Inlet	ISI-97005B
N-3A	MSAD-1	Main Steam	ISI-13142-33A
N-3B	MSBD-1	Main Steam	ISI-13142-34A
N-3C	MSCD-1	Main Steam	ISI-13142-35A
N-3D	MSDD-1	Main Steam	ISI-13142-36A
N-4A	FWAD-1	Feedwater	ISI-13142-53A
N-4B	FWBD-1	Feedwater	ISI-13142-53A
N-4C	FWCD-1	Feedwater	ISI-13142-52A
N-4D	FWDD-1	Feedwater	ISI-13142-52A
N-5A	CSAD-1	Core Spray	ISI-13142-26A
N-5B	CSBD-1	Core Spray	ISI-13142-31A
N-8A	JPAD-1	Jet Pump Instr.	ISI-16
N-8B	JPBD-1	Jet Pump Instr.	ISI-16
N-9	CRAD-1	CRD Return	ISI FIG. 5
N-11A	VIAE-1	Instrumentation	ISI-97007A
N-11B	VIBE-1	Instrumentation	ISI-97008A
N-12A	VICE-1	Instrumentation	ISI-19
N-12B	VIDE-1	Instrumentation	ISI-19
N-13	VFAE-1	Flange-to-Nozzle	ISI FIG. 5
N-14	VFBE-1	Flange-to-Nozzle	ISI FIG. 5

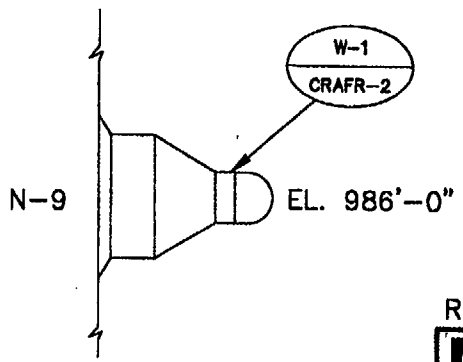

REF: NX-9310-11

FILE NO:

NSP (M&SP)- MONTICELLO ISI

DWN: TJH CHKD: RAC APPD:

SYSTEM: RX VESSEL NOZZLES

LINE: N/A

DWG: ISI FIG.5 REV: 03

REACTOR VESSEL STUD. WASHER & LIGAMENT LOCATION

NUT

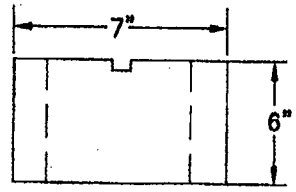

WASHER

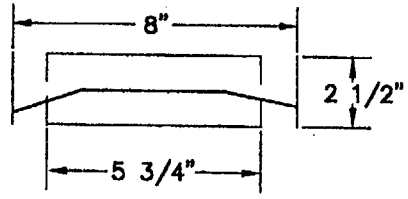

STUD

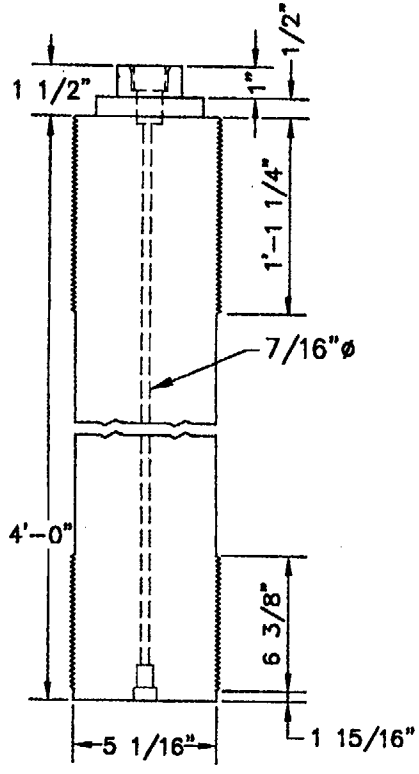

BUSHING

6"ø X 7.420" LG

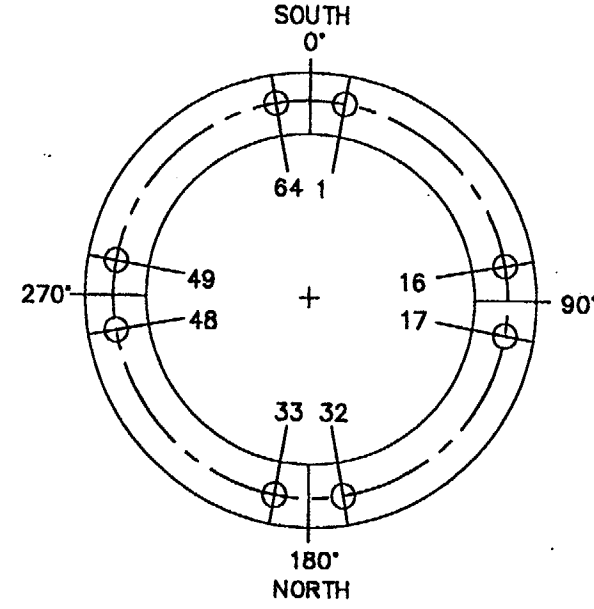

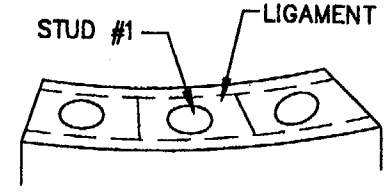

REF: NX-8290-63

FILE NO:

NSP (M&SP)– MONTICELLO ISI

DWN: TJH CHKD: APPD:

SYSTEM: REACTOR VESSEL BOLTING

LINE: N/A

DWG: ISI FIG. 6 REV: 03

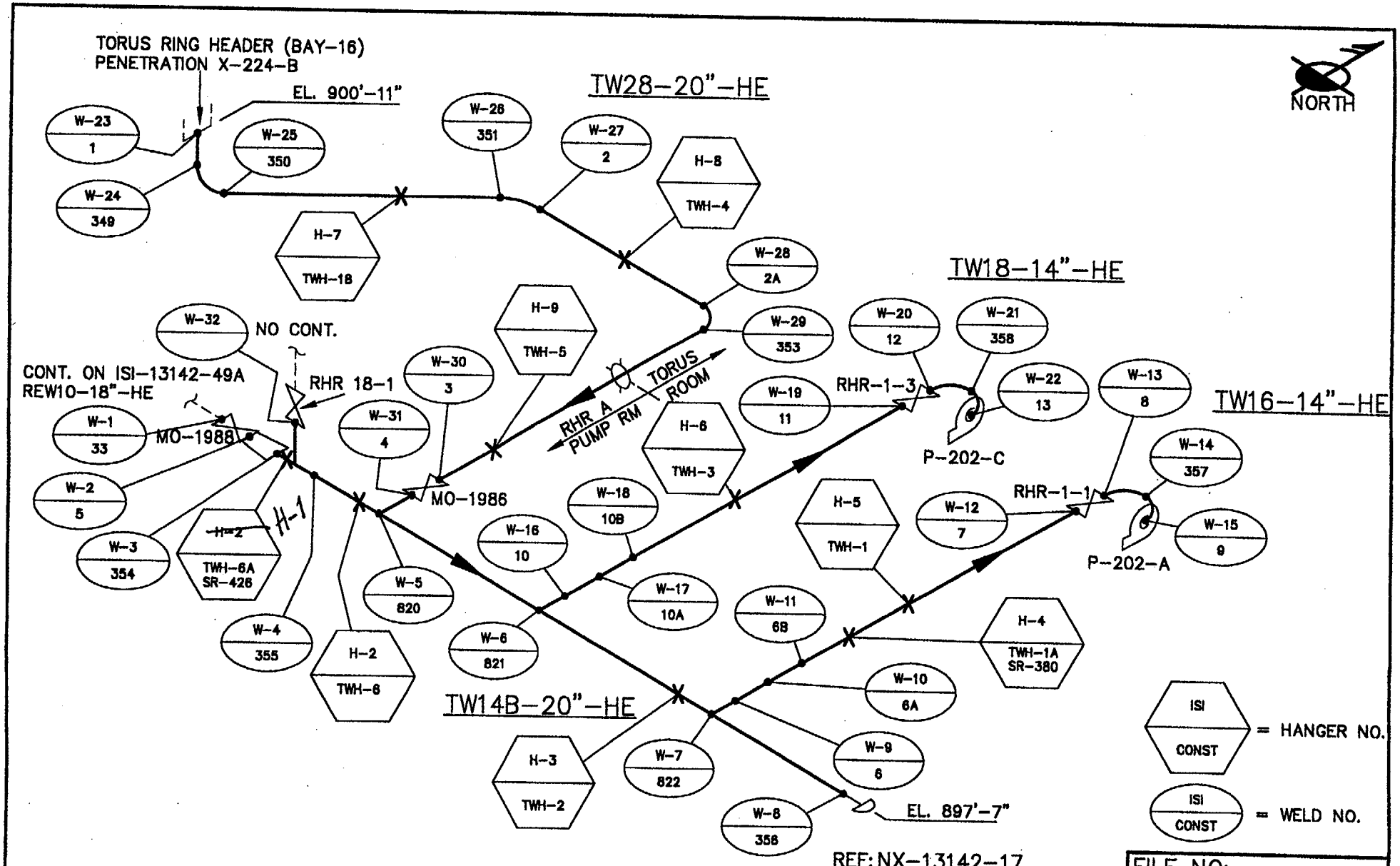

REF: NX-13142-17

FILE NO:

NSP (M&SP)- MONTICELLO ISI

DWN: JRM CHKD: RAD APPD:

SYSTEM: RHR "A" SUCTION

LINE: NOTED

DWG: ISI-13142-17A REV: 03

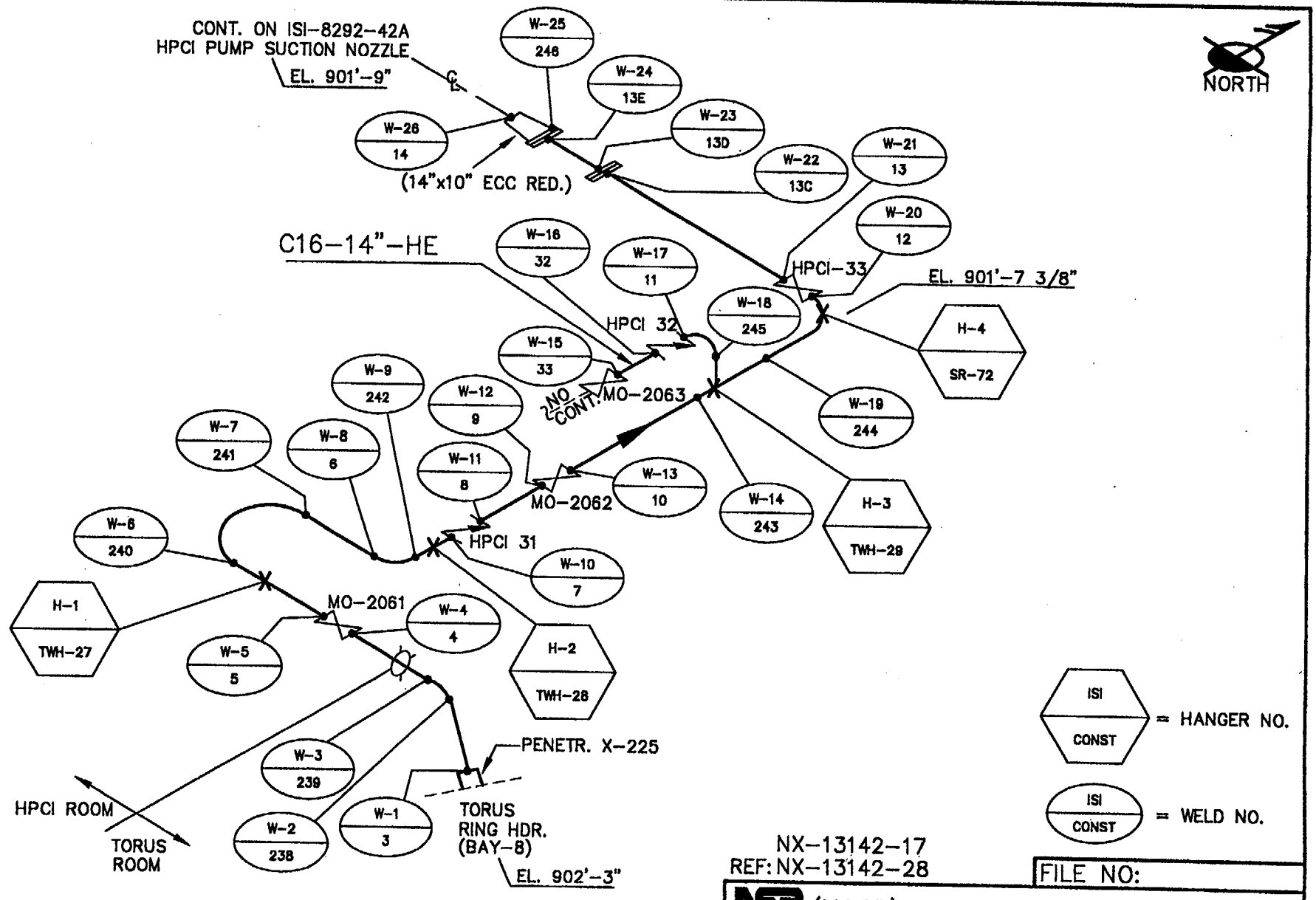

HIGH PRESSURE COOLANT INJECTION (WATER SIDE SUCTION)

NX-13142-17
REF: NX-13142-28

FILE NO:

NSP (M&SP)– MONTICELLO	ISI
DWN: JRM CHKD: RAD APPD:	
SYSTEM: HPCI WATER	
LINE: TW1-14"-HE	
DWG: ISI-13142-17B	REV: 03

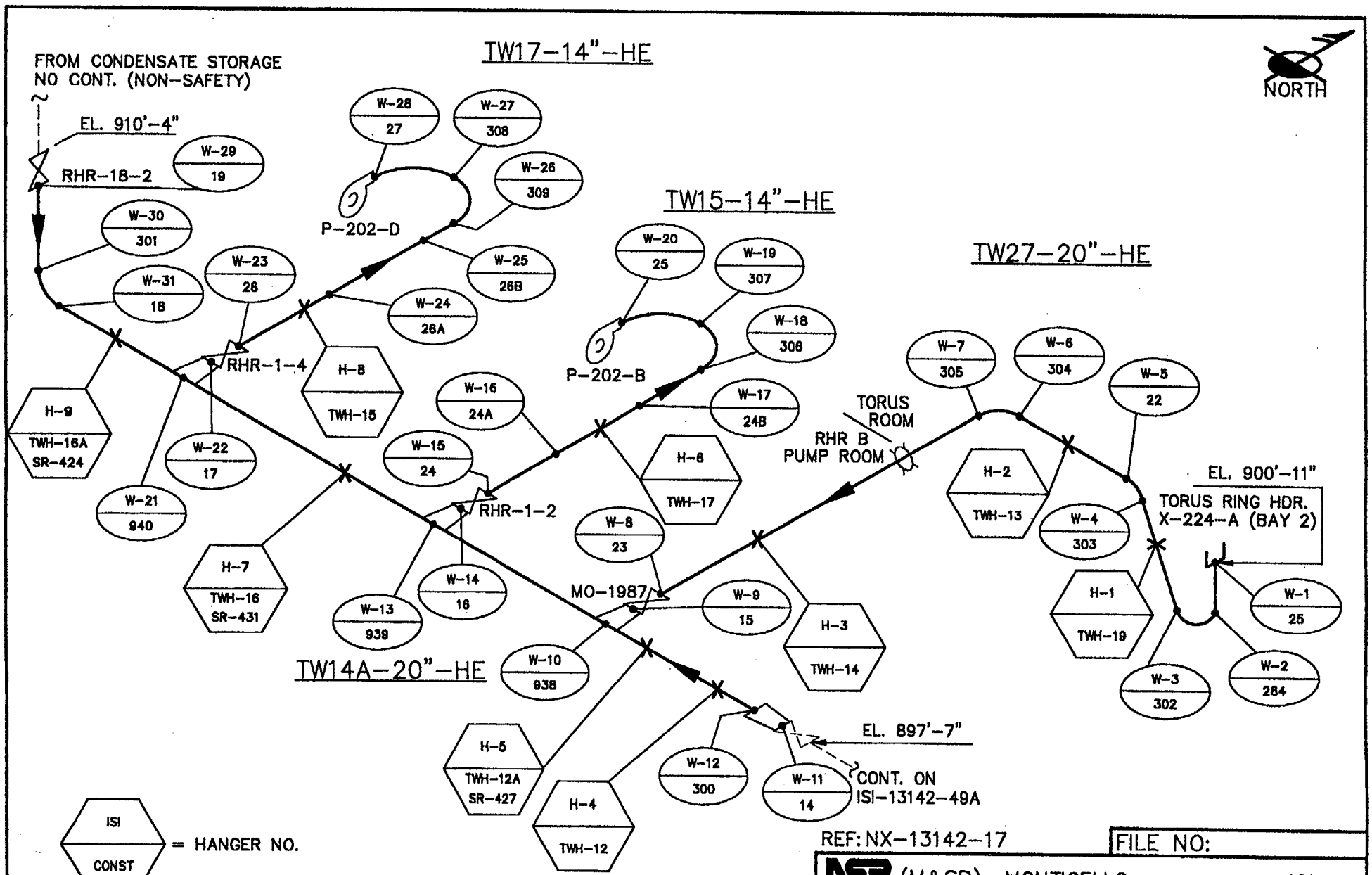
FROM CONDENSATE STORAGE
NO CONT. (NON-SAFETY)
EL. 910'-4"
RHR-18-2
TW17-14"-HE
TW15-14"-HE
TW27-20"-HE
TW14A-20"-HE
NORTH
W-28 27
W-27 308
W-29 19
W-26 309
P-202-D
W-30 301
W-20 25
W-19 307
W-23 26
W-25 26B
W-31 18
W-24 26A
W-18 308
P-202-B
RHR-1-4
H-8 TWH-15
W-7 305
W-6 304
W-5 22
TORUS ROOM
RHR B PUMP ROOM
H-9 TWH-16A SR-424
W-16 24A
W-17 24B
W-22 17
W-15 24
H-6 TWH-17
H-2 TWH-13
EL. 900'-11"
TORUS RING HDR. X-224-A (BAY 2)
W-21 940
RHR-1-2
W-8 23
W-4 303
H-7 TWH-16 SR-431
W-14 16
MO-1987
W-9 15
H-1 TWH-19
W-1 25
W-13 939
H-3 TWH-14
W-10 938
W-3 302
W-2 284
H-5 TWH-12A SR-427
EL. 897'-7"
W-12 300
W-11 14
CONT. ON ISI-13142-49A
H-4 TWH-12
ISI CONST = HANGER NO.
ISI CONST = WELD NO.
RHR SUCTION B
REF: NX-13142-17
FILE NO:
NSP (M&SP)- MONTICELLO
ISI
DWN: JRM
CHKD:
APPD:
SYSTEM: RHR B
LINE: NOTED
DWG: ISI-13142-17C
REV: 03

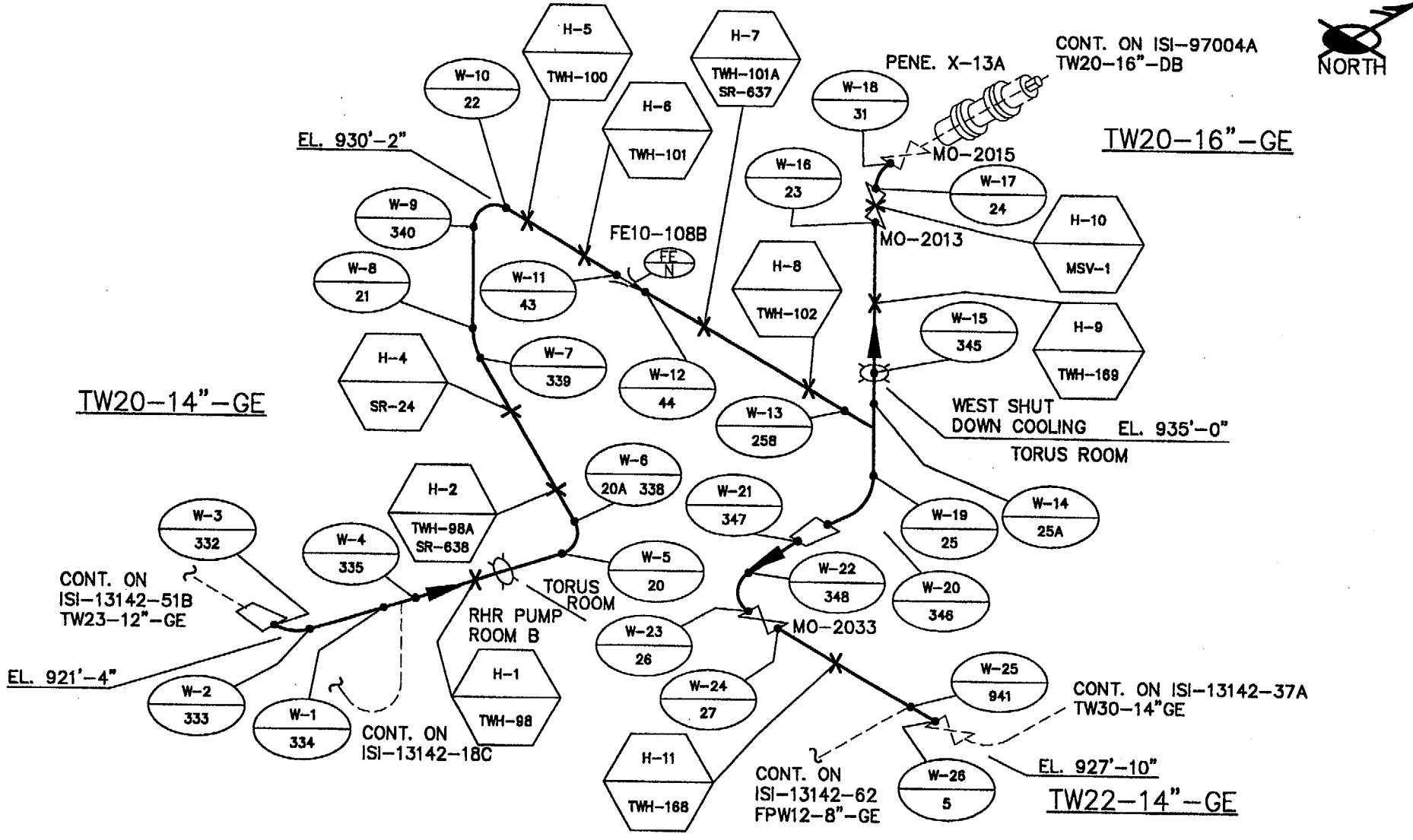

RHR DISCHARGE B

ISI / CONST = HANGER NO.

ISI / CONST = WELD NO.

REF: NX-13142-18

FILE NO:

NSP (M&SP) – MONTICELLO ISI

DWN: JRM CHKD: APPD:

SYSTEM: RHR B

LINE: NOTED

DWG: ISI-13142-18A REV: 04

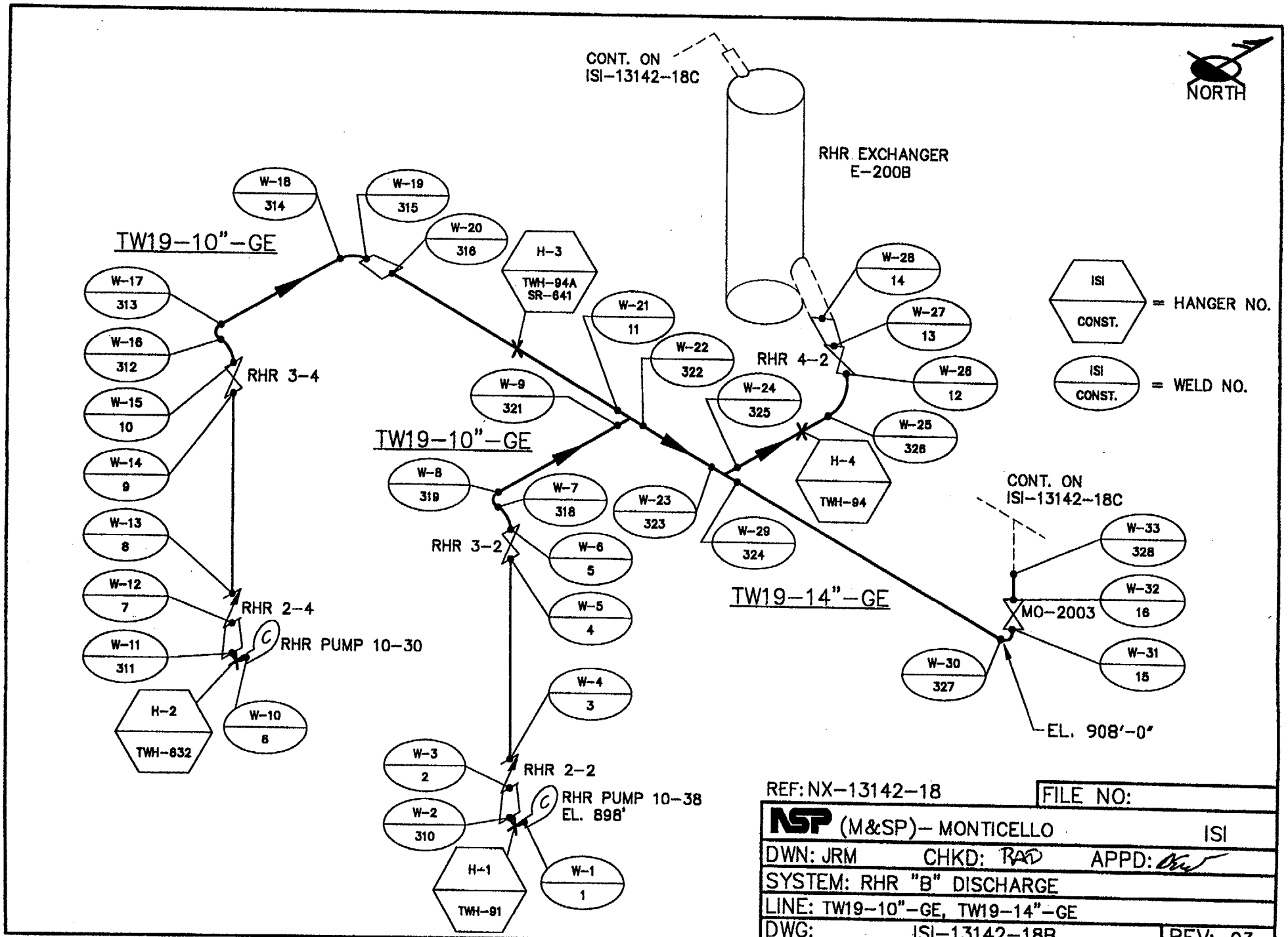
CONT. ON
ISI-13142-18C
NORTH
RHR EXCHANGER
E-200B
TW19-10"-GE
W-18
314
W-19
315
W-20
316
H-3
TWH-94A
SR-641
W-17
313
W-16
312
W-15
10
W-14
9
RHR 3-4
W-13
8
W-12
7
RHR 2-4
W-11
311
RHR PUMP 10-30
H-2
TWH-832
W-10
8
W-21
11
W-22
322
W-9
321
TW19-10"-GE
W-8
319
W-7
318
RHR 3-2
W-6
5
W-5
4
W-4
3
W-3
2
RHR 2-2
W-2
310
RHR PUMP 10-38
EL. 898'
H-1
TWH-91
W-1
1
W-28
14
W-27
13
RHR 4-2
W-26
12
W-24
325
W-25
326
H-4
TWH-94
W-23
323
W-29
324
TW19-14"-GE
CONT. ON
ISI-13142-18C
W-33
328
W-32
16
MO-2003
W-31
15
W-30
327
EL. 908'-0"
ISI
CONST.
= HANGER NO.
ISI
CONST.
= WELD NO.
REF: NX-13142-18
FILE NO:
NSP (M&SP)- MONTICELLO
ISI
DWN: JRM
CHKD: RAD
APPD:
SYSTEM: RHR "B" DISCHARGE
LINE: TW19-10"-GE, TW19-14"-GE
DWG: ISI-13142-18B
REV: 03

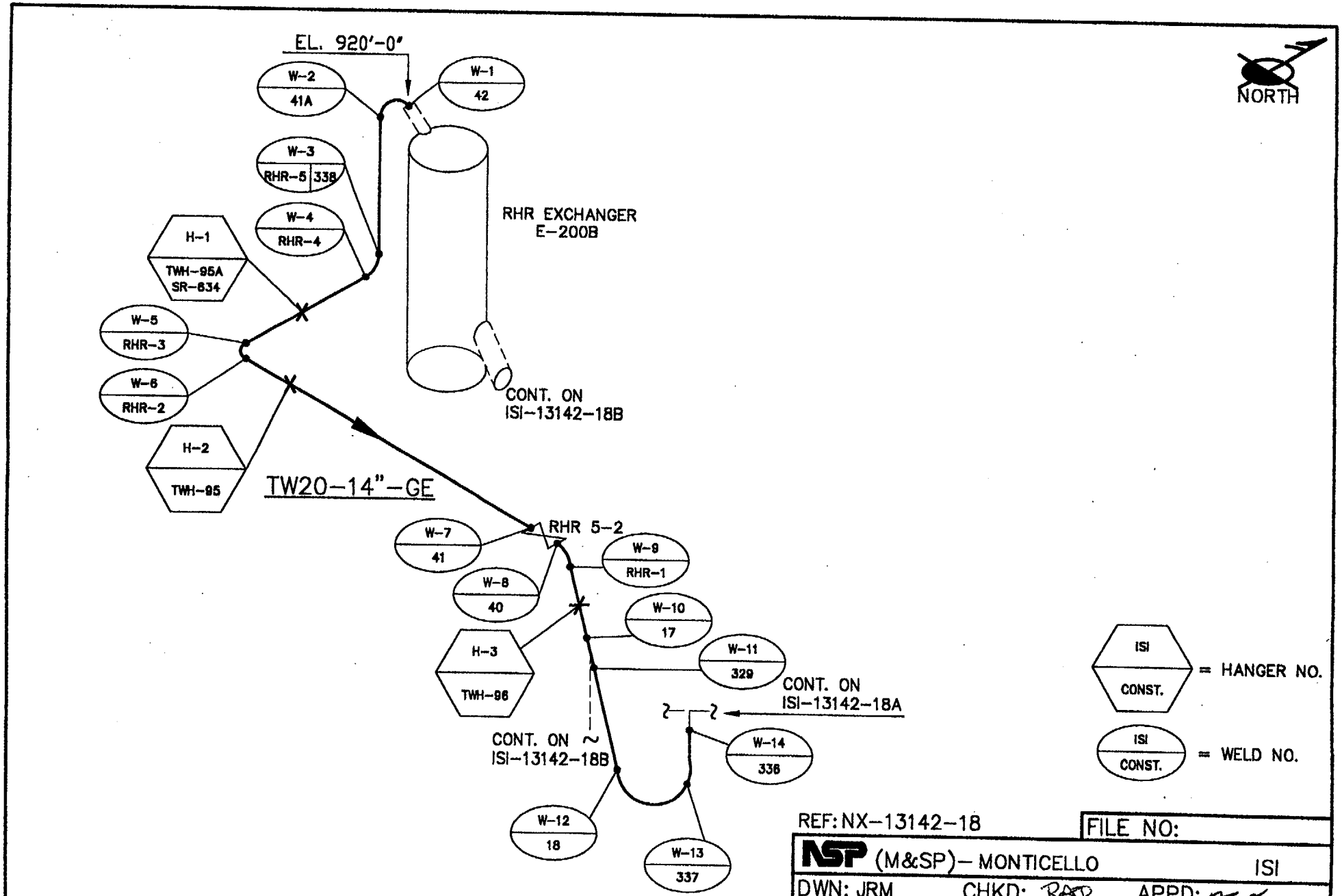

REF: NX-13142-18

FILE NO:

NSP (M&SP)- MONTICELLO ISI

DWN: JRM CHKD: RAD APPD:

SYSTEM: RHR "B" DISCHARGE

LINE: TW20-14"-GE

DWG: ISI-13142-18C REV: 02

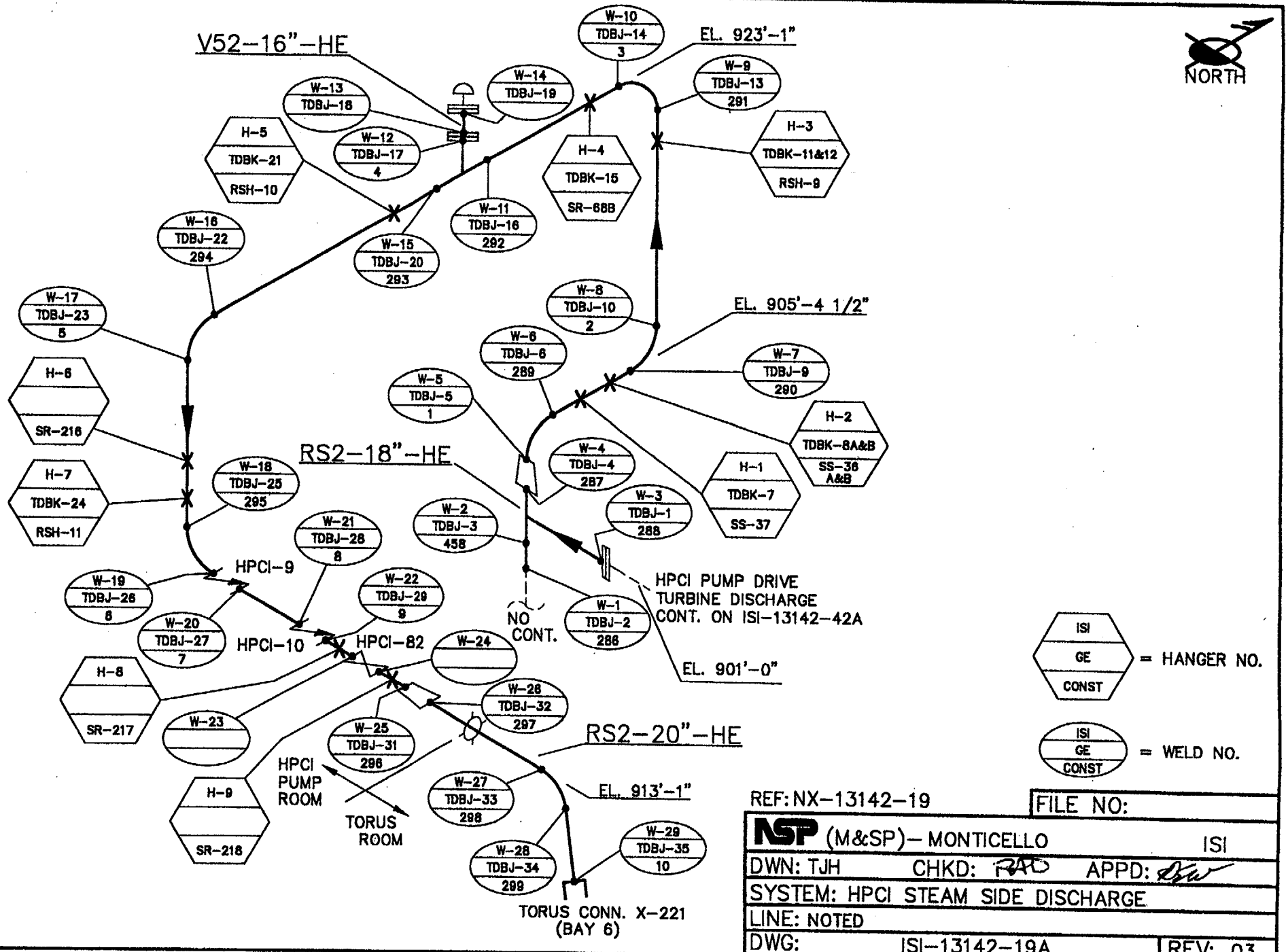

REF: NX–13142–19

FILE NO:

NSP (M&SP)– MONTICELLO ISI

DWN: TJH CHKD: RAD APPD:

SYSTEM: HPCI STEAM SIDE DISCHARGE

LINE: NOTED

DWG: ISI–13142–19A REV: 03

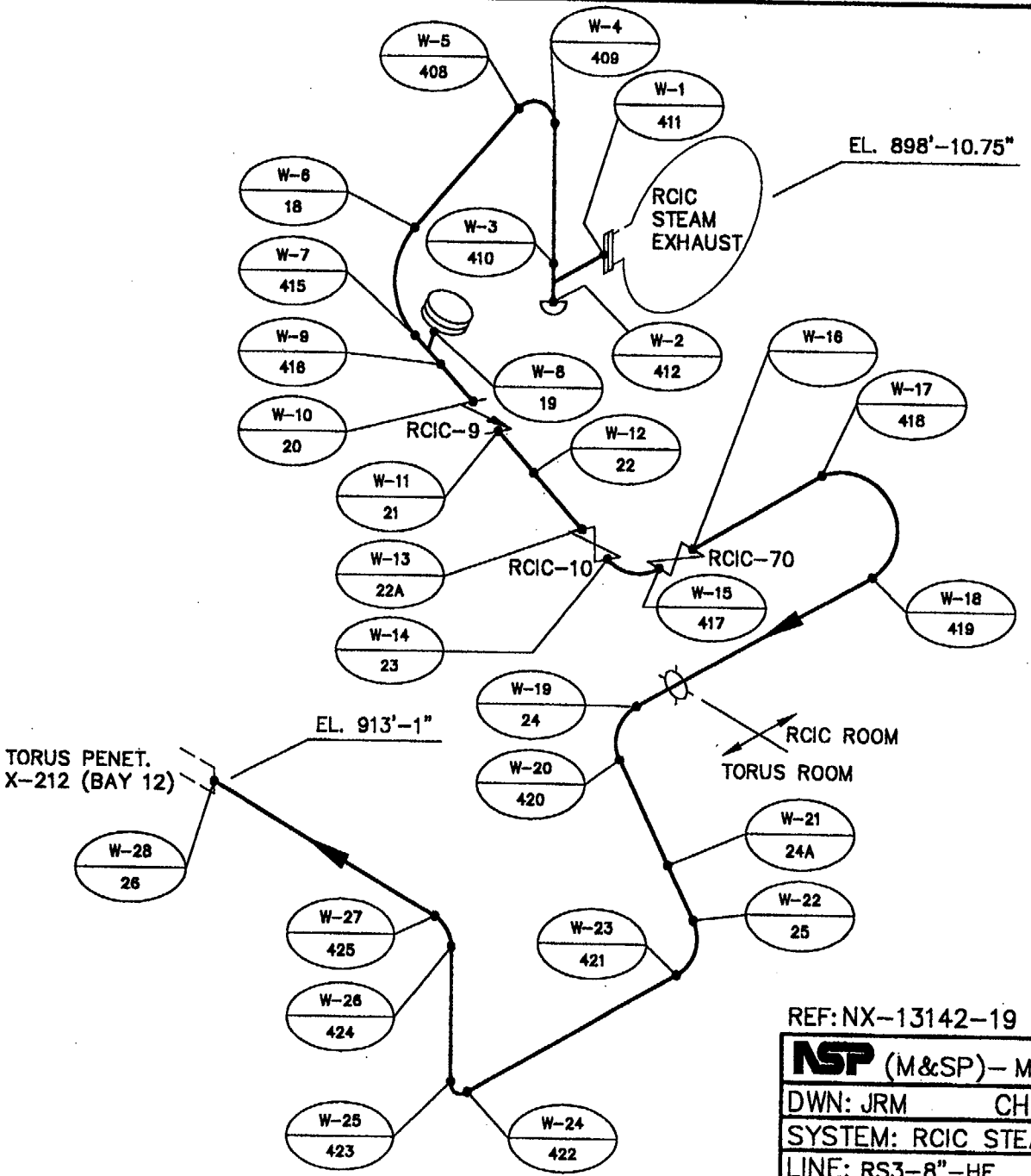

REF: NX-13142-19

FILE NO:

NSP (M&SP)- MONTICELLO ISI

DWN: JRM CHKD: RAD APPD:

SYSTEM: RCIC STEAM DISCHARGE

LINE: RS3-8"-HE

DWG: ISI-13142-19B REV: 03

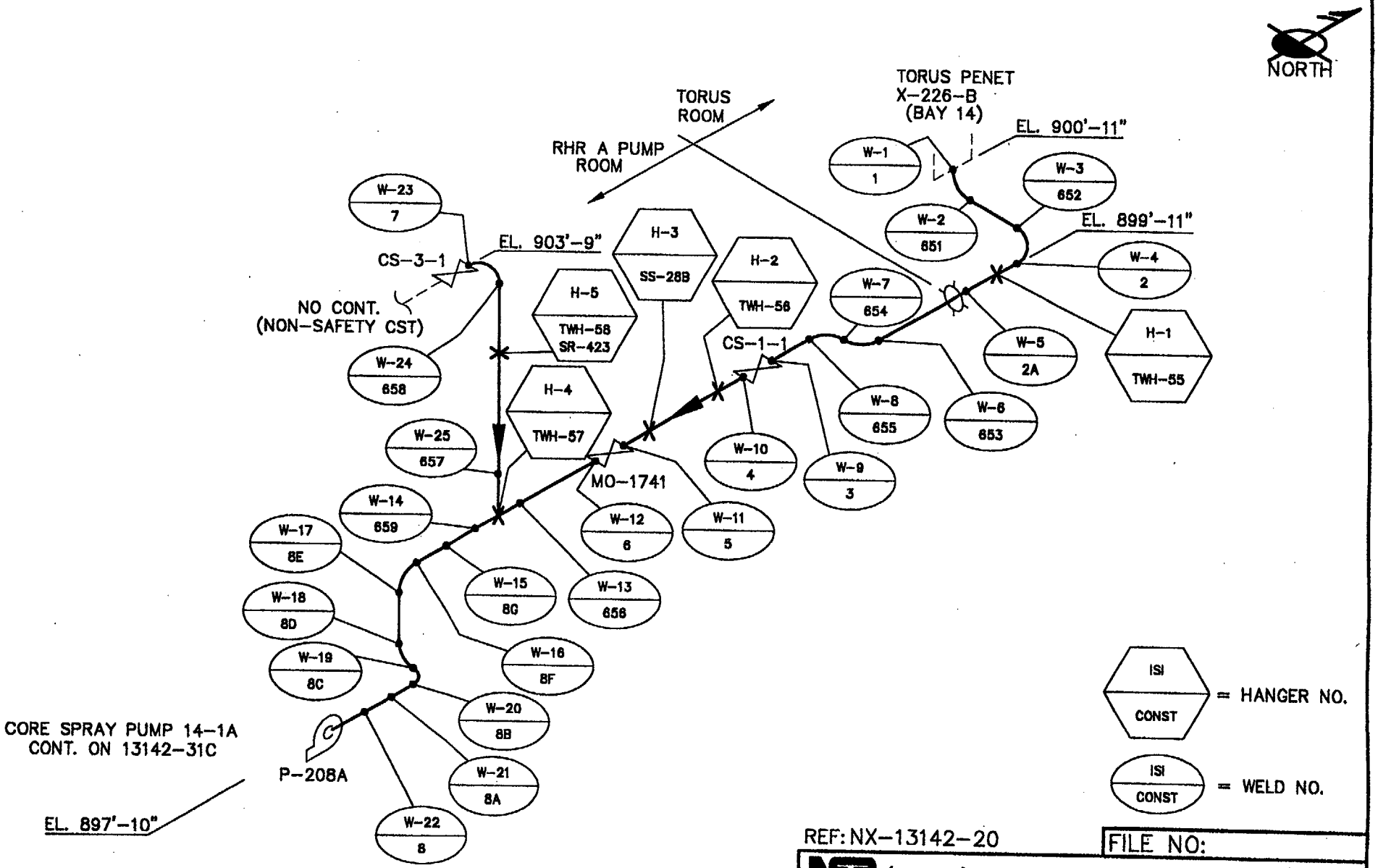

REF: NX-13142-20

FILE NO:

NSP (M&SP)- MONTICELLO ISI

DWN: TJH CHKD: RAD APPD:

SYSTEM: CORE SPRAY "A" SUCTION

LINE: TW10-12"-HE

DWG: ISI-13142-20A REV: 03

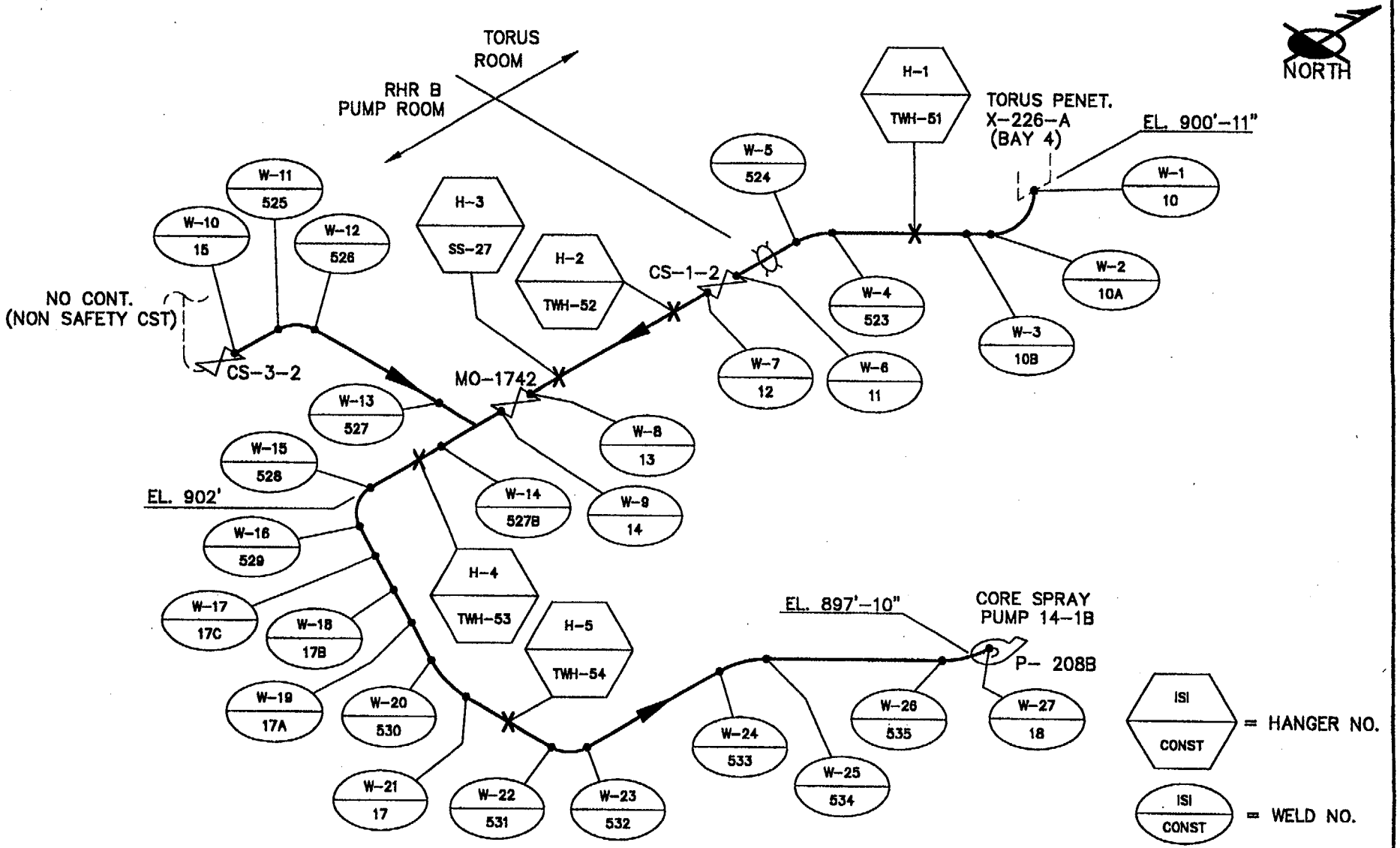

REF: NX-13142-20

FILE NO:

NSP (M&SP)- MONTICELLO ISI

DWN: TJH CHKD: RAS APPD:

SYSTEM: CORE SPRAY "B" SUCTION

LINE: TW6-12"-HE

DWG: ISI-13142-20B REV: 03

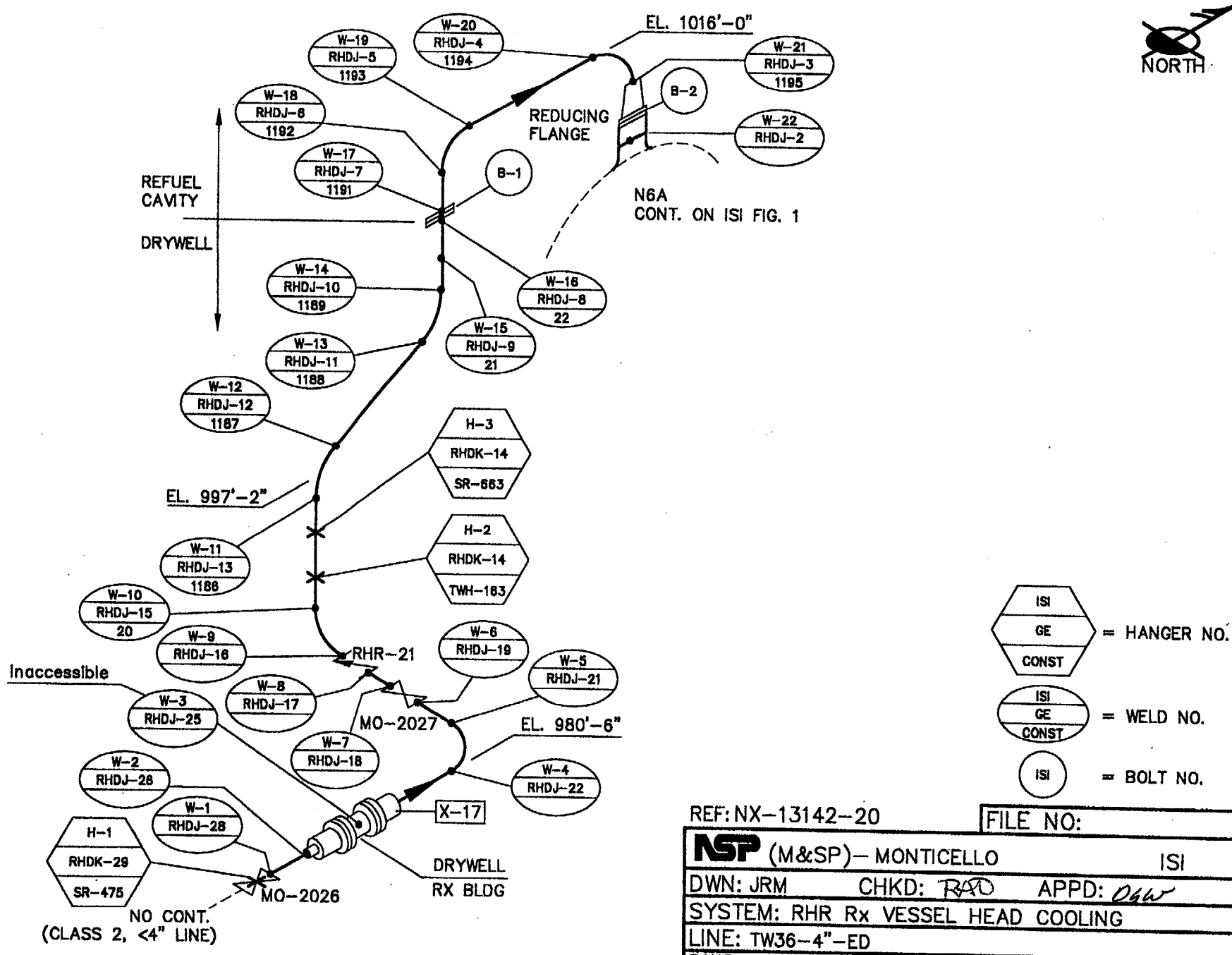

REF: NX-13142-20

FILE NO:

NSP (M&SP)– MONTICELLO	ISI
DWN: JRM CHKD: RAD APPD: DGW	
SYSTEM: RHR Rx VESSEL HEAD COOLING	
LINE: TW36-4"-ED	
DWG: ISI-13142-20C	REV: 03

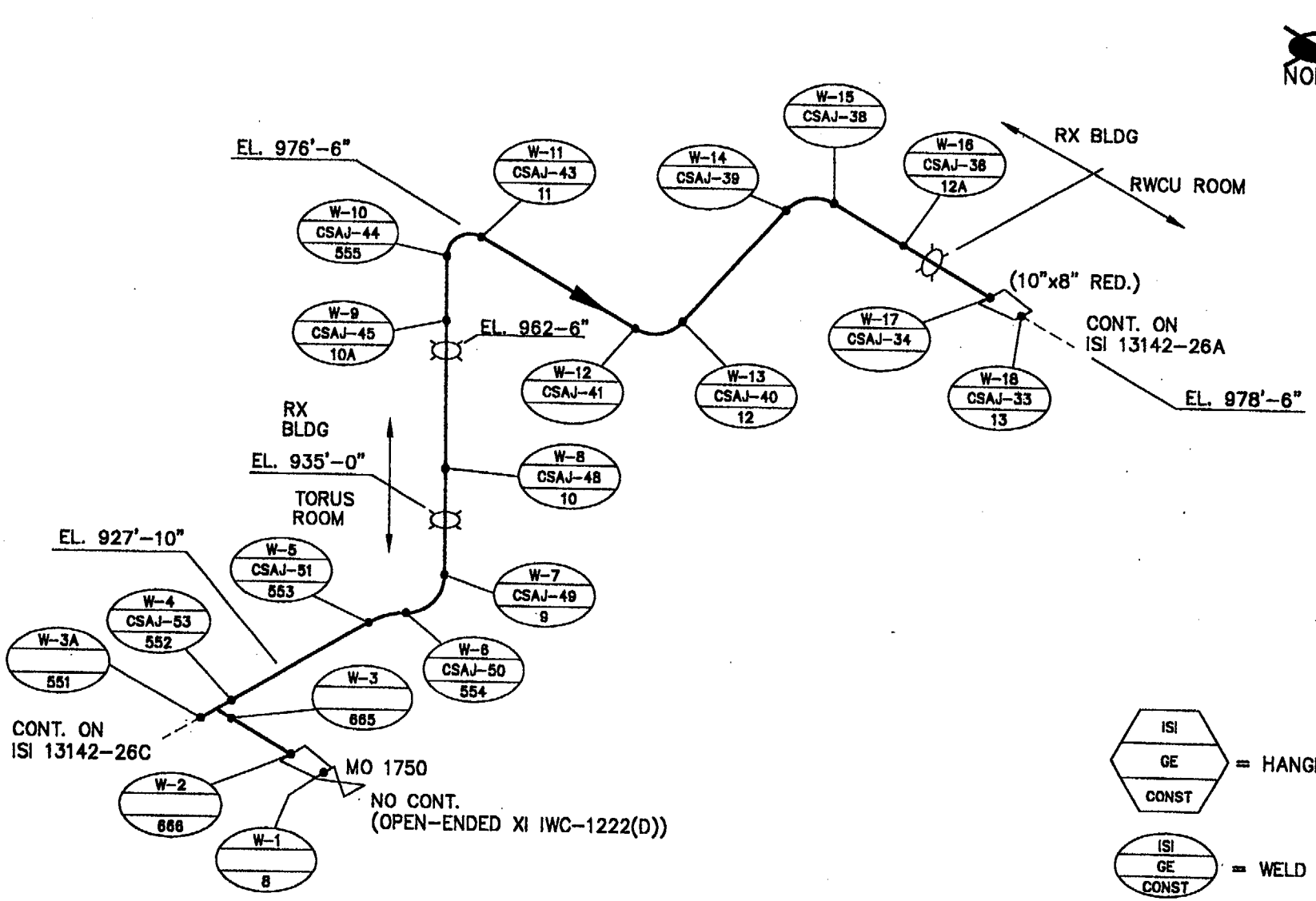

REF: NX-13142-26

FILE NO:

NSP (M&SP) - MONTICELLO ISI

DWN: TJH CHKD: RAD APPD:

SYSTEM: CORE SPRAY "B" DISCHARGE

LINE: TW7-10"-GE

DWG: ISI 13142-26B REV: 03

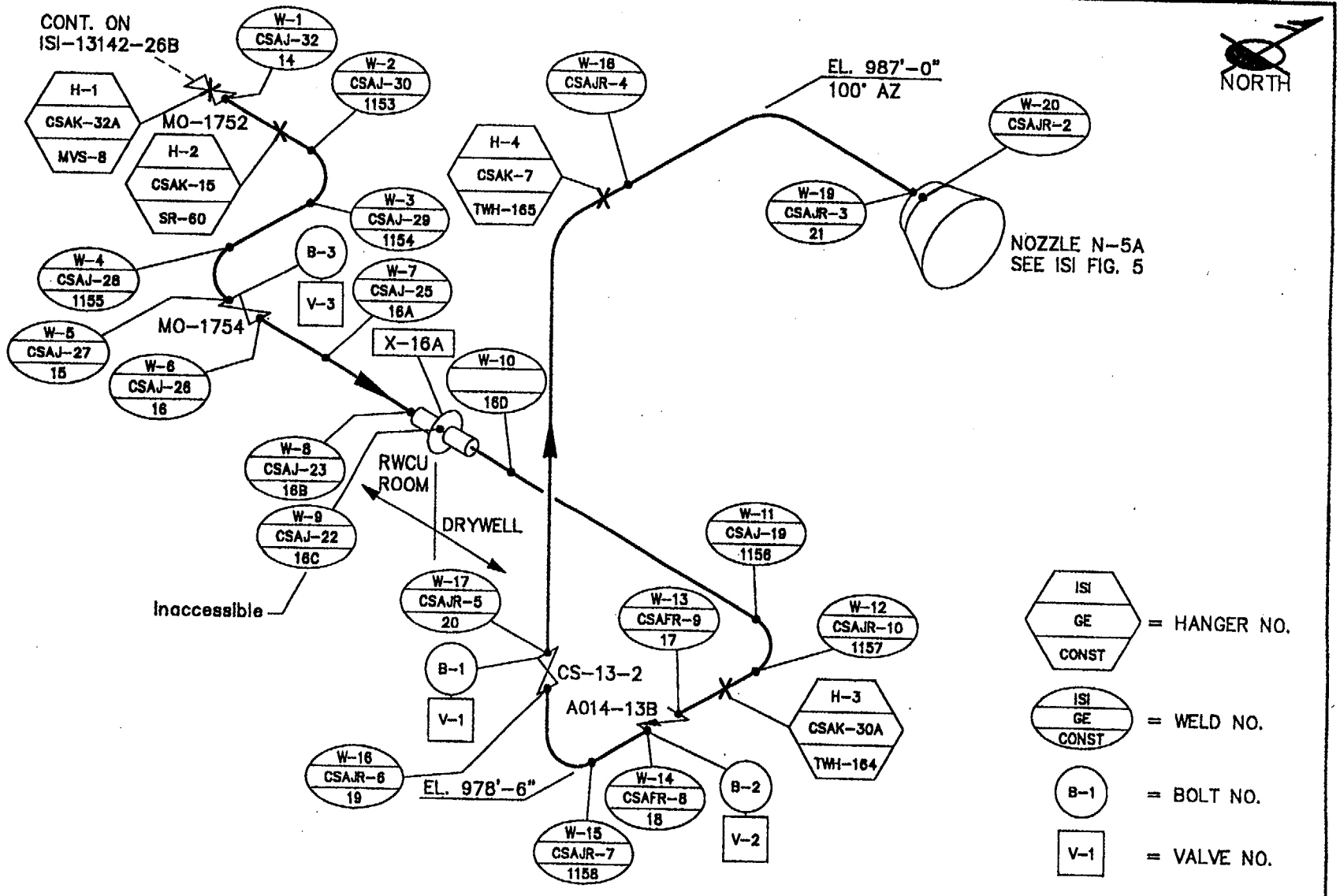

REF: NX-13142-26

FILE NO:

NSP (M&SP)- MONTICELLO ISI

DWN: JRM CHKD: RAD APPD: DSW

SYSTEM: CORE SPRAY "B" DISCHARGE

LINE: TW7-8"-ED

DWG: ISI-13142-26A REV: 03

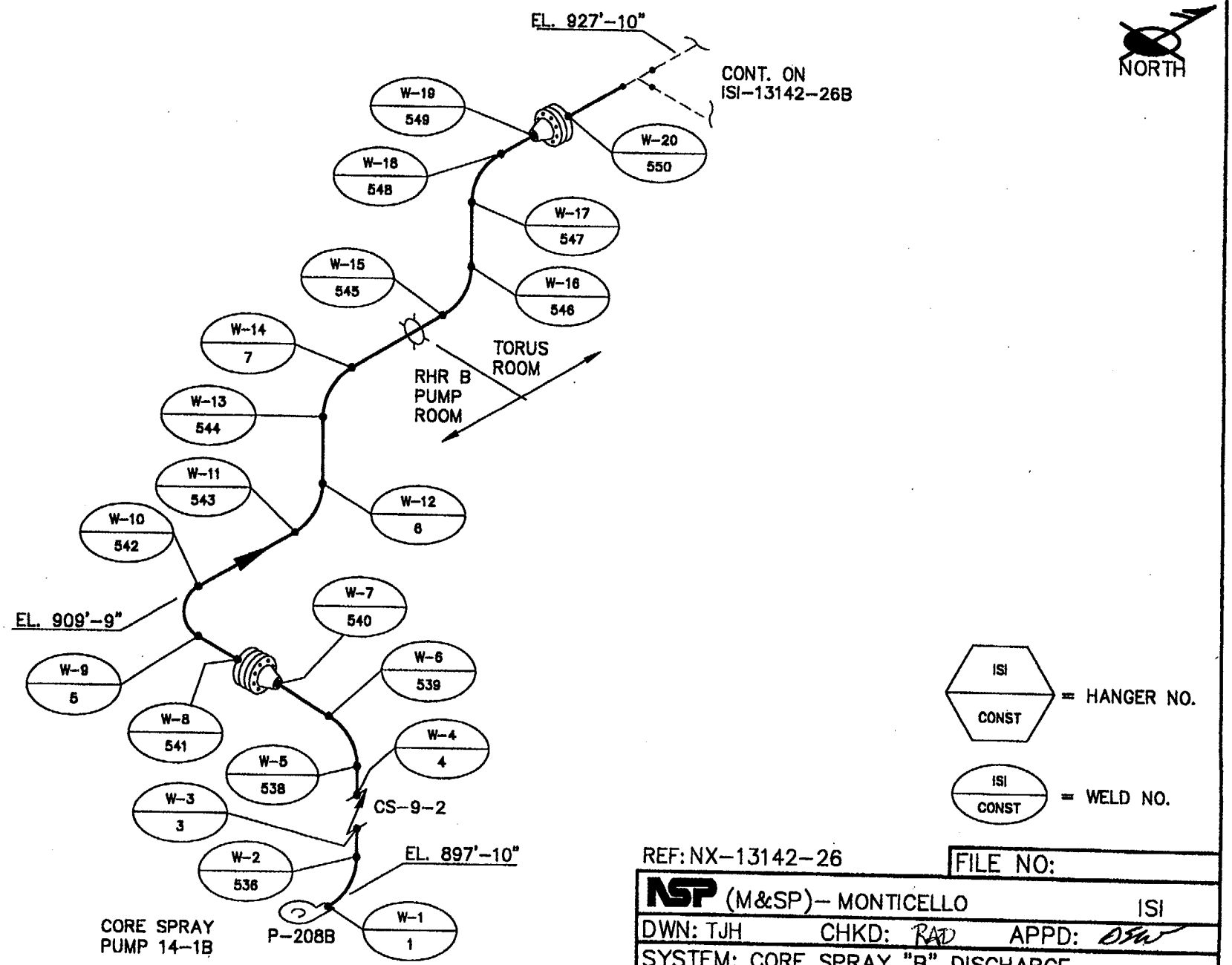

REF: NX-13142-26

FILE NO:

NSP (M&SP)- MONTICELLO ISI

DWN: TJH CHKD: RAD APPD: DSW

SYSTEM: CORE SPRAY "B" DISCHARGE

LINE: TW7-10"-GE

DWG: ISI-13142-26C REV: 03

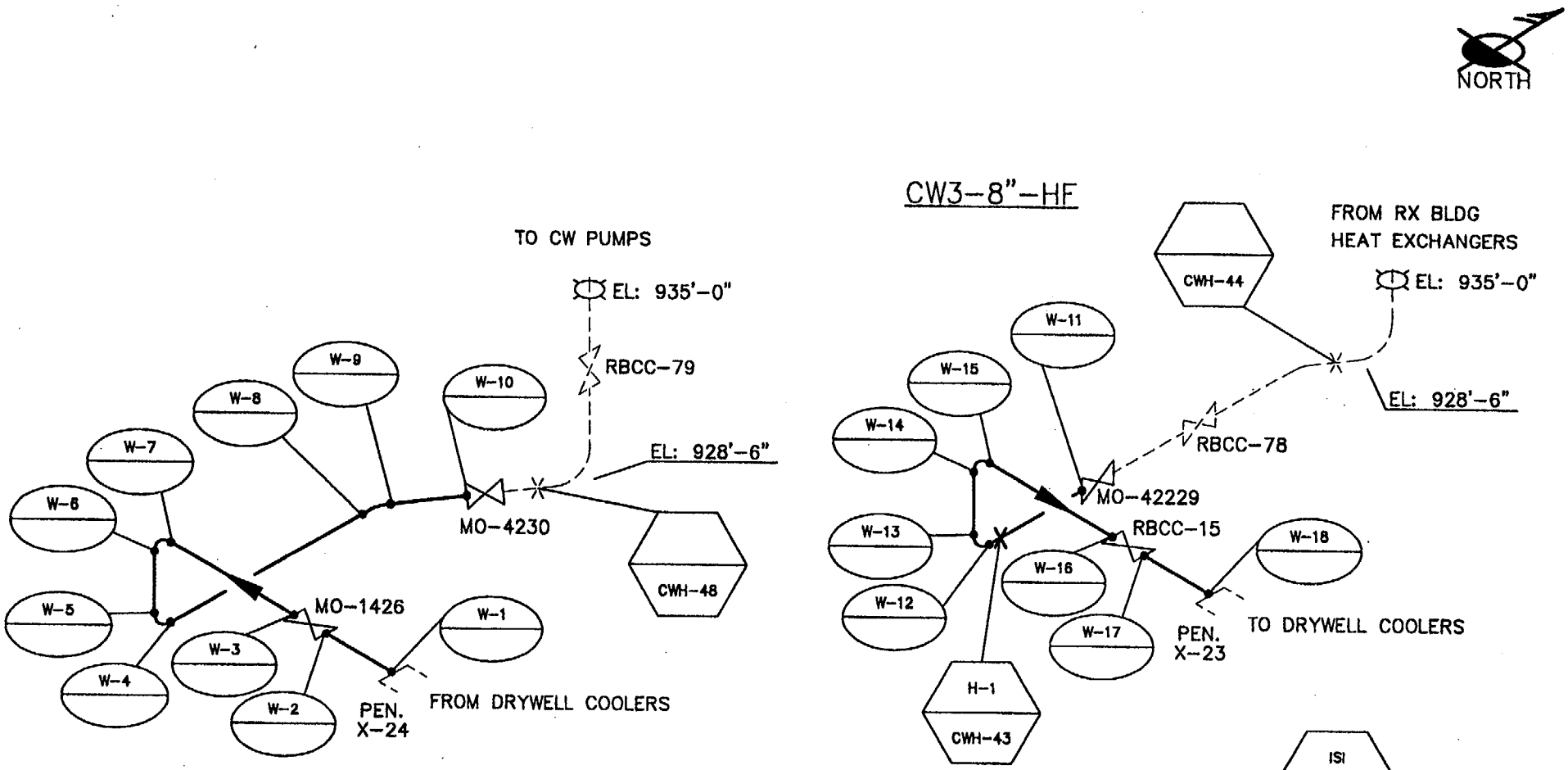

NH-36042-2
NX-13142-29
REF: NX-13142-38

FILE NO: 3I29AR00	
NSP (M&SP)- MONTICELLO	ISI
DWN: TJH CHKD: DSW APPD: DSW	
SYSTEM: RX BLDG COOLING WATER	
LINE: CW4-8"-HF & CW3-8"-HF	
DWG: ISI-13142-29A	REV: 00

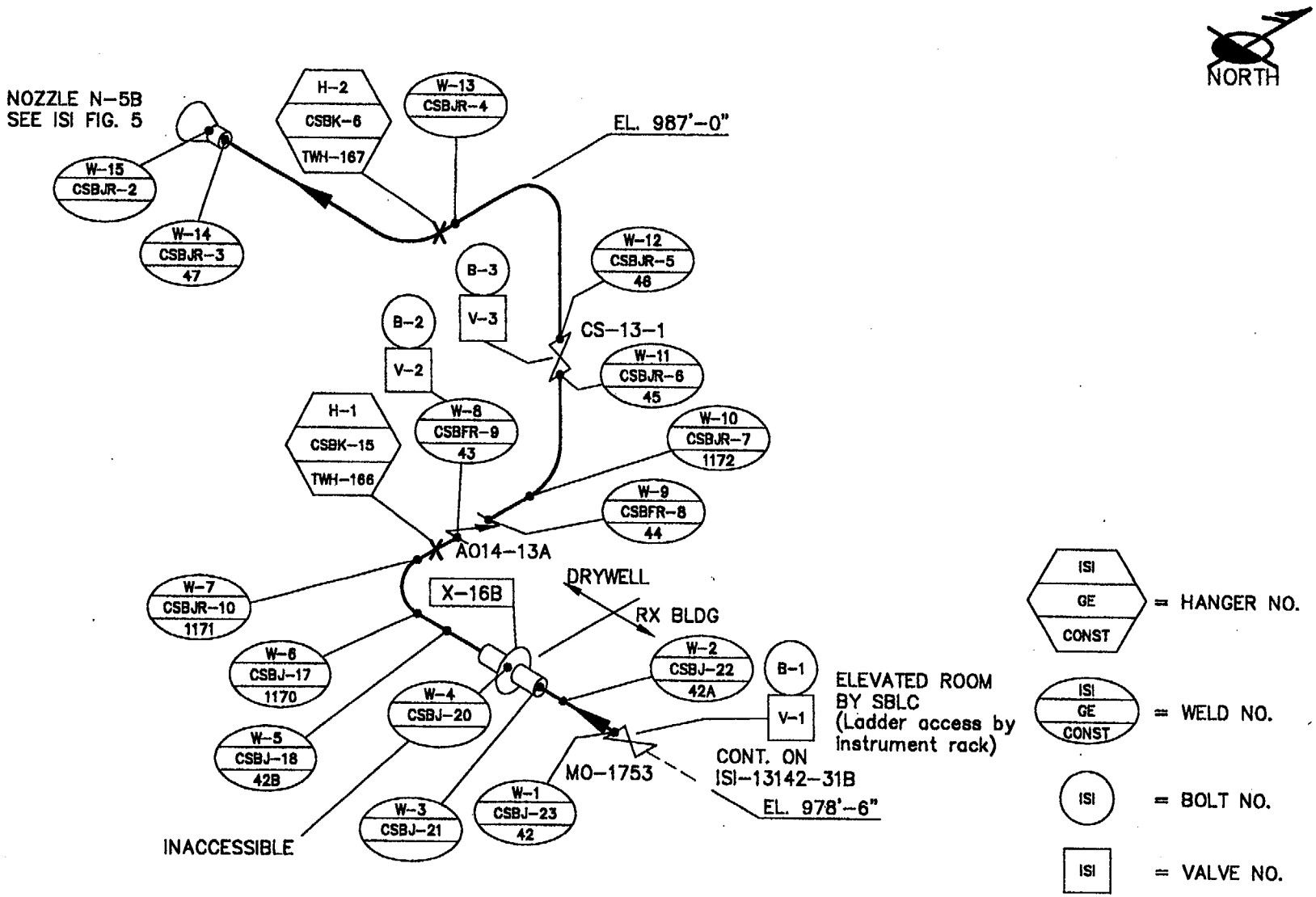

REF: NX-13142-31

FILE NO:

NSP (M&SP)- MONTICELLO ISI

DWN: TJH CHKD: RAD APPD: DSW

SYSTEM: CORE SPRAY "A" DISCHARGE

LINE: TW11-8"-ED

DWG: ISI-13142-31A REV: 03

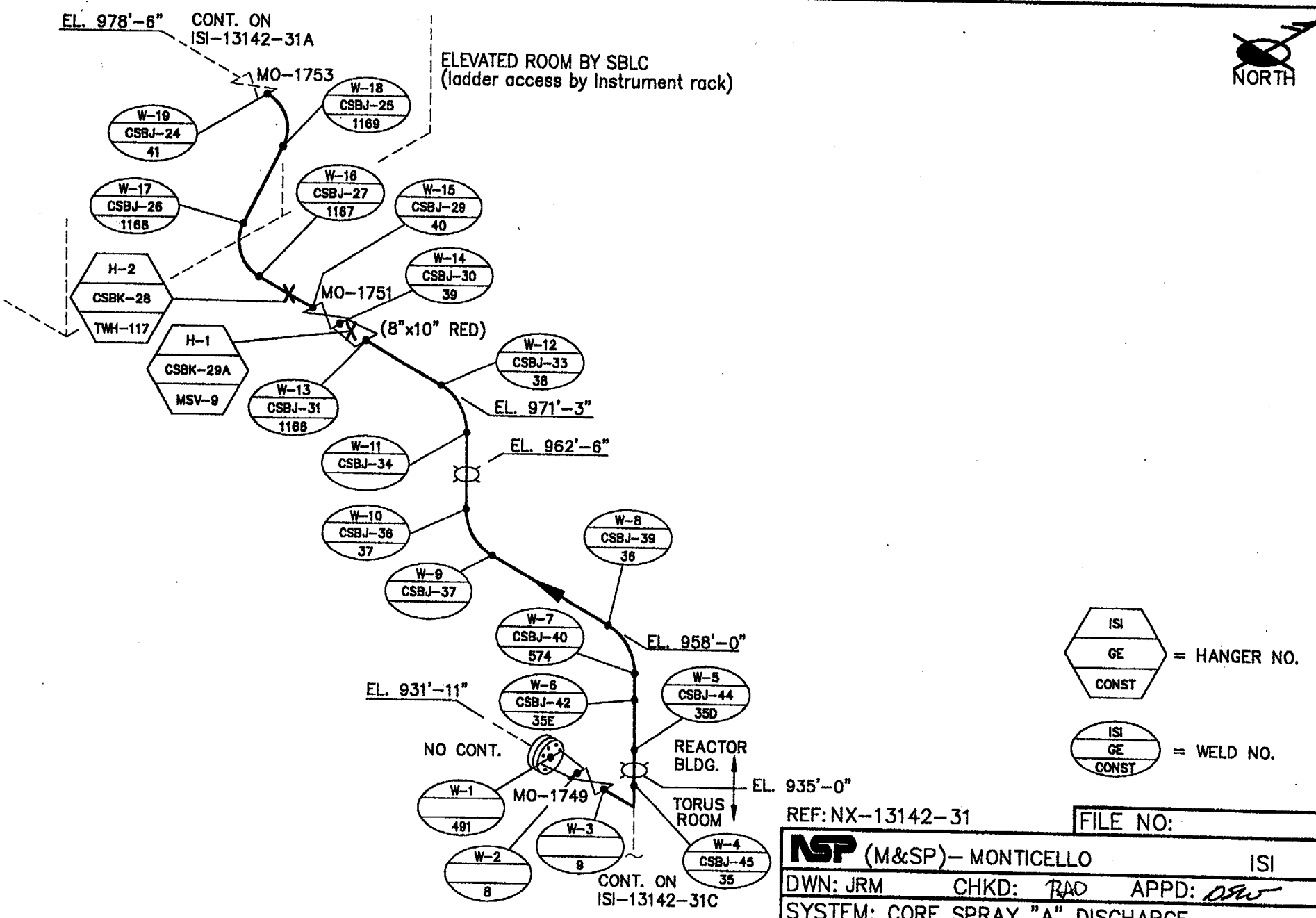
EL. 978'-6"
CONT. ON ISI-13142-31A
ELEVATED ROOM BY SBLC
(ladder access by instrument rack)
NORTH
MO-1753
W-18 CSBJ-25 1169
W-19 CSBJ-24 41
W-16 CSBJ-27 1167
W-15 CSBJ-29 40
W-17 CSBJ-26 1168
H-2 CSBK-28 TWH-117
W-14 CSBJ-30 39
MO-1751
(8"x10" RED)
H-1 CSBK-29A MSV-9
W-12 CSBJ-33 38
W-13 CSBJ-31 1166
EL. 971'-3"
EL. 962'-6"
W-11 CSBJ-34
W-10 CSBJ-36 37
W-8 CSBJ-39 36
W-9 CSBJ-37
W-7 CSBJ-40 574
EL. 958'-0"
EL. 931'-11"
W-6 CSBJ-42 35E
W-5 CSBJ-44 35D
NO CONT.
REACTOR BLDG.
EL. 935'-0"
W-1 491
MO-1749
TORUS ROOM
W-3 9
W-4 CSBJ-45 35
W-2 8
CONT. ON ISI-13142-31C
ISI GE CONST = HANGER NO.
ISI GE CONST = WELD NO.
REF: NX-13142-31
FILE NO:
NSP (M&SP)- MONTICELLO ISI
DWN: JRM CHKD: RAD APPD:
SYSTEM: CORE SPRAY "A" DISCHARGE
LINE: TW11-10"-GE
DWG: ISI-13142-31B REV: 03

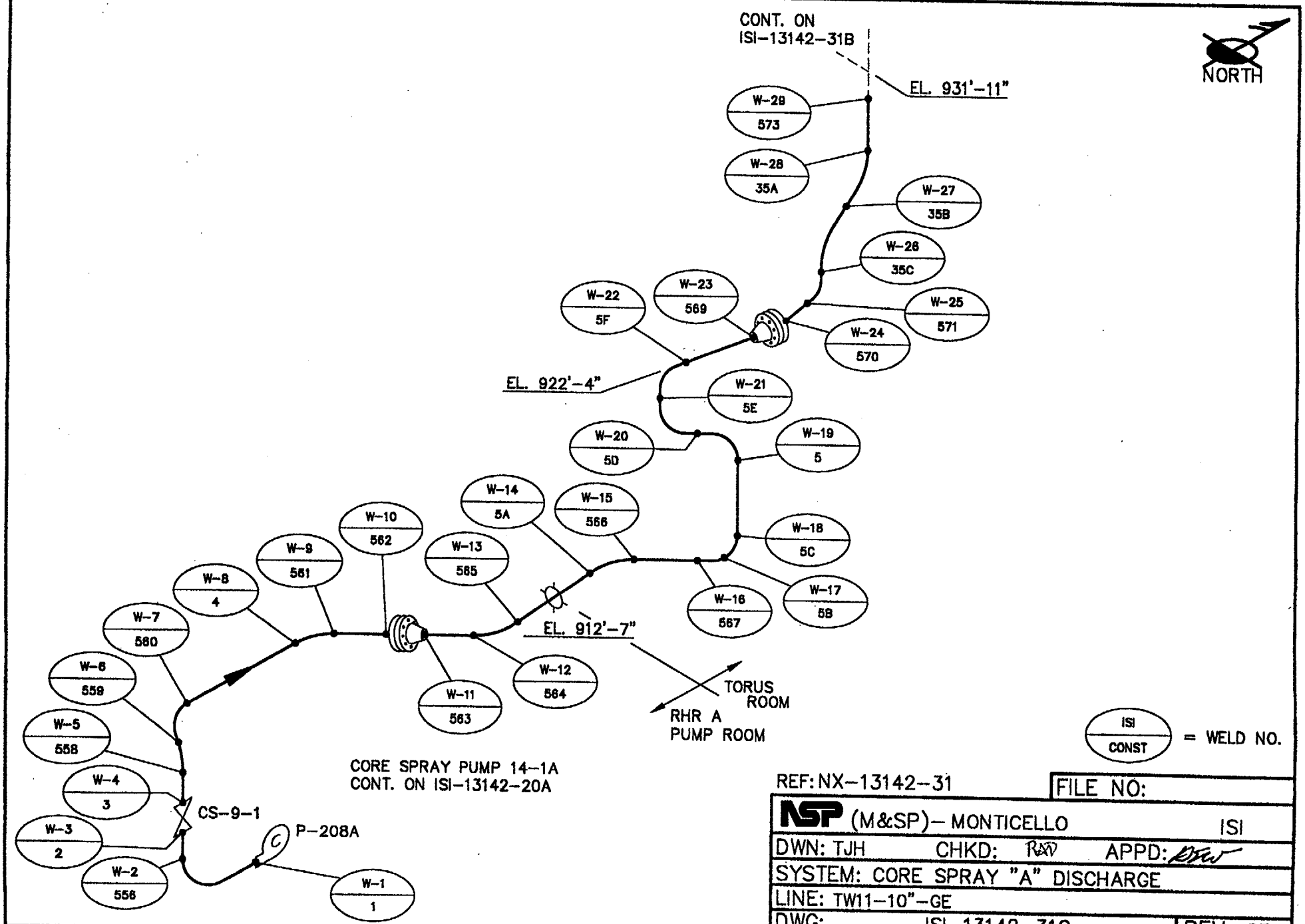
CONT. ON
ISI-13142-31B
EL. 931'-11"
NORTH
W-29
573
W-28
35A
W-27
35B
W-26
35C
W-25
571
W-24
570
W-23
569
W-22
5F
EL. 922'-4"
W-21
5E
W-20
5D
W-19
5
W-18
5C
W-17
5B
W-16
567
W-15
566
W-14
5A
W-13
565
W-12
564
W-11
563
W-10
562
W-9
561
W-8
4
W-7
560
W-6
559
W-5
558
W-4
3
W-3
2
W-2
556
W-1
1
EL. 912'-7"
TORUS
ROOM
RHR A
PUMP ROOM
CS-9-1
P-208A
CORE SPRAY PUMP 14-1A
CONT. ON ISI-13142-20A
ISI
CONST
= WELD NO.
REF: NX-13142-31
FILE NO:
NSP (M&SP)- MONTICELLO
ISI
DWN: TJH
CHKD:
APPD:
SYSTEM: CORE SPRAY "A" DISCHARGE
LINE: TW11-10"-GE
DWG: ISI-13142-31C
REV: 03

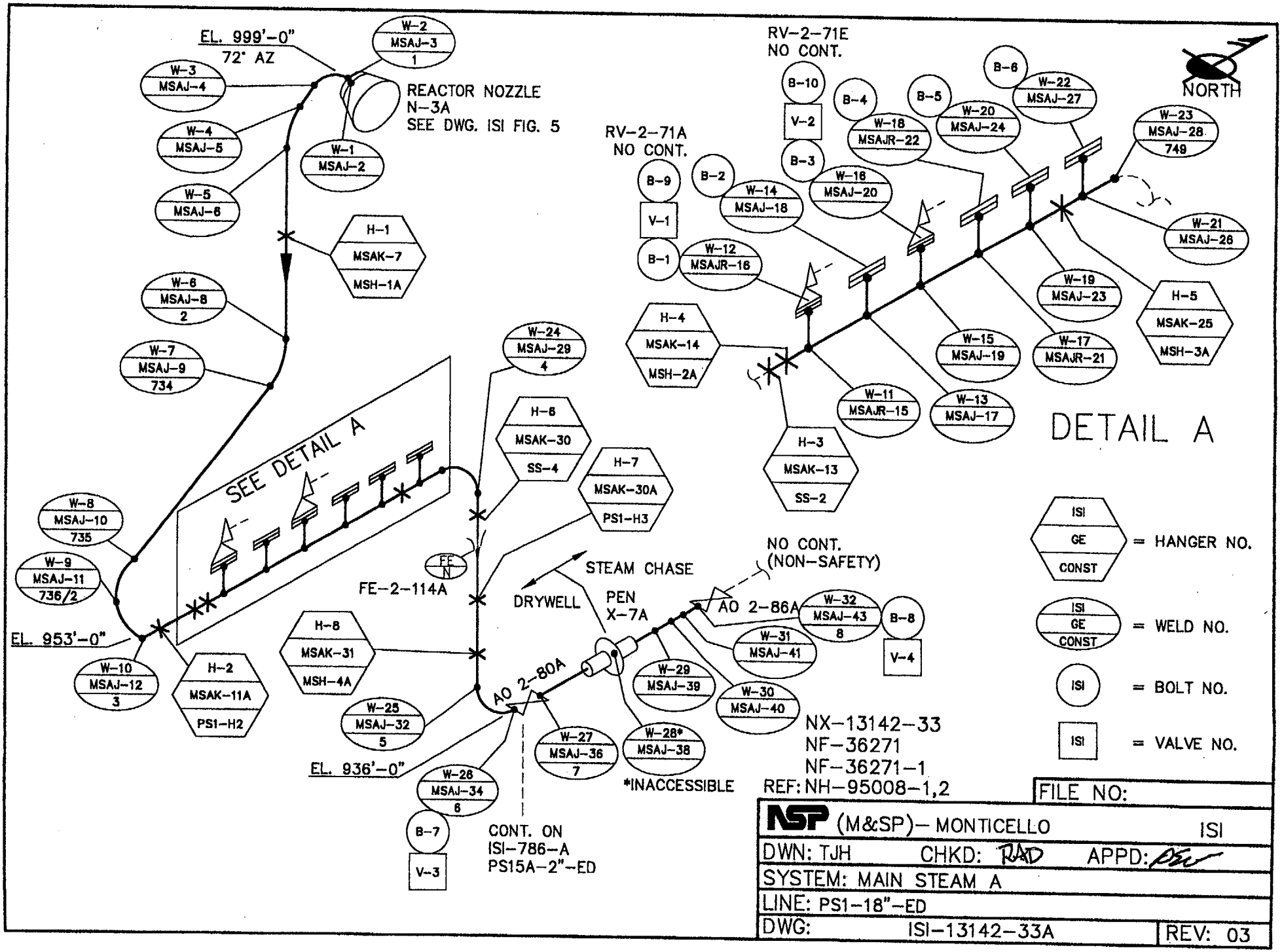
EL. 999'-0"
72° AZ
W-2 MSAJ-3 1
W-3 MSAJ-4
W-4 MSAJ-5
W-1 MSAJ-2
W-5 MSAJ-6
REACTOR NOZZLE N-3A
SEE DWG. ISI FIG. 5
H-1 MSAK-7 MSH-1A
W-6 MSAJ-8 2
W-7 MSAJ-9 734
W-8 MSAJ-10 735
W-9 MSAJ-11 736/2
W-10 MSAJ-12 3
H-2 MSAK-11A PS1-H2
EL. 953'-0"
SEE DETAIL A
W-24 MSAJ-29 4
H-6 MSAK-30 SS-4
H-7 MSAK-30A PS1-H3
FE N
FE-2-114A
H-8 MSAK-31 MSH-4A
W-25 MSAJ-32 5
EL. 936'-0"
W-26 MSAJ-34 6
B-7
V-3
CONT. ON ISI-786-A PS15A-2"-ED
W-27 MSAJ-36 7
W-28* MSAJ-38
*INACCESSIBLE
DRYWELL
STEAM CHASE
PEN X-7A
AO 2-80A
AO 2-86A
NO CONT. (NON-SAFETY)
W-32 MSAJ-43 8
B-8
V-4
W-31 MSAJ-41
W-29 MSAJ-39
W-30 MSAJ-40
RV-2-71E NO CONT.
B-10
V-2
B-3
B-4
B-5
B-6
W-22 MSAJ-27
W-18 MSAJR-22
W-20 MSAJ-24
W-23 MSAJ-28 749
RV-2-71A NO CONT.
B-9
V-1
B-1
B-2
W-14 MSAJ-18
W-16 MSAJ-20
W-12 MSAJR-16
W-21 MSAJ-26
W-19 MSAJ-23
H-5 MSAK-25 MSH-3A
H-4 MSAK-14 MSH-2A
W-15 MSAJ-19
W-17 MSAJR-21
W-11 MSAJR-15
W-13 MSAJ-17
H-3 MSAK-13 SS-2
NORTH
DETAIL A
ISI GE CONST = HANGER NO.
ISI GE CONST = WELD NO.
ISI = BOLT NO.
ISI = VALVE NO.
NX-13142-33
NF-36271
NF-36271-1
REF: NH-95008-1,2
FILE NO:
NSP (M&SP)- MONTICELLO ISI
DWN: TJH CHKD: RAD APPD:
SYSTEM: MAIN STEAM A
LINE: PS1-18"-ED
DWG: ISI-13142-33A REV: 03

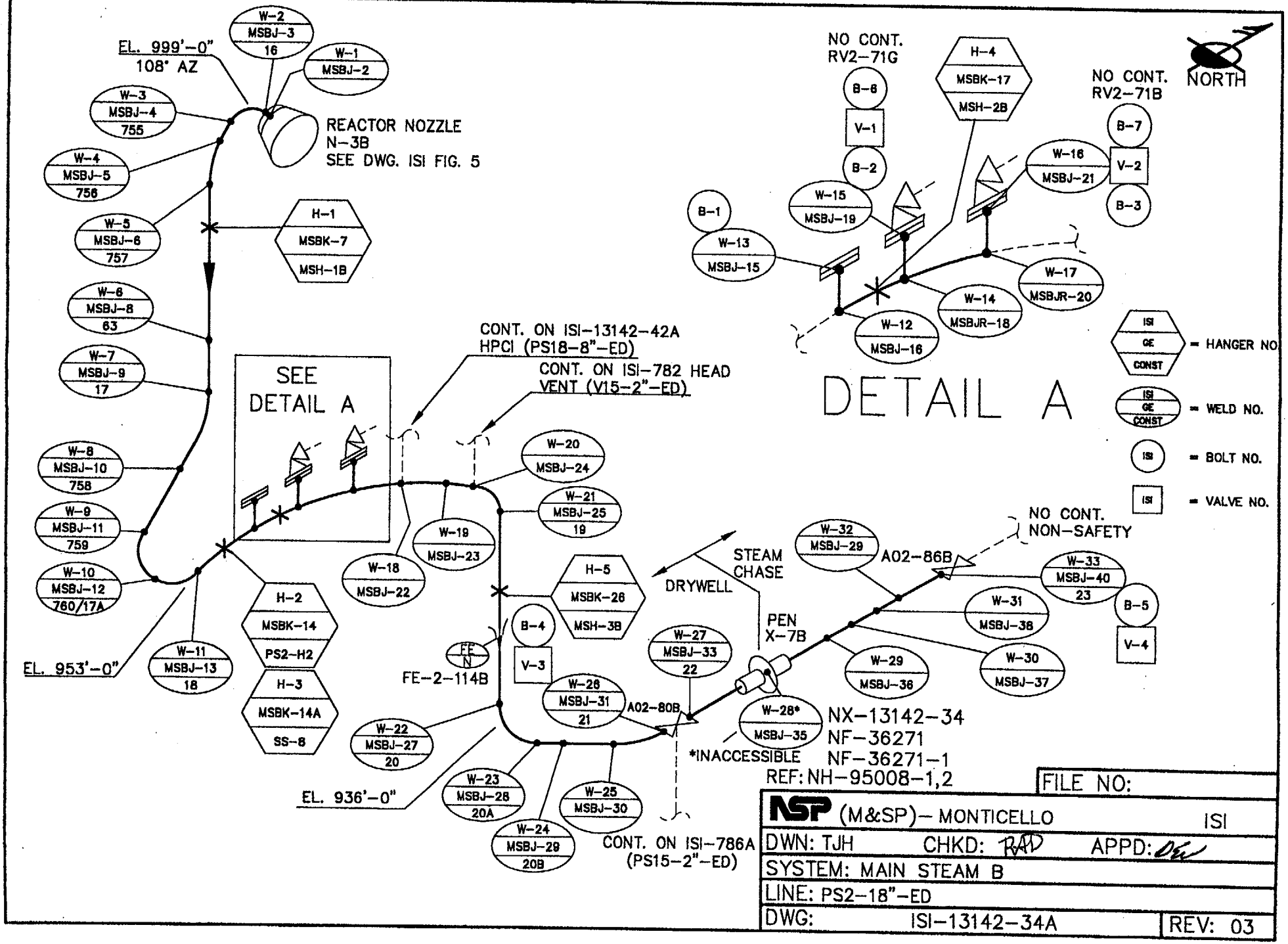
EL. 999'-0"
108° AZ
W-2
MSBJ-3
16
W-1
MSBJ-2
W-3
MSBJ-4
755
W-4
MSBJ-5
756
W-5
MSBJ-6
757
W-6
MSBJ-8
63
W-7
MSBJ-9
17
W-8
MSBJ-10
758
W-9
MSBJ-11
759
W-10
MSBJ-12
760/17A
W-11
MSBJ-13
18
EL. 953'-0"
REACTOR NOZZLE
N-3B
SEE DWG. ISI FIG. 5
H-1
MSBK-7
MSH-1B
H-2
MSBK-14
PS2-H2
H-3
MSBK-14A
SS-8
SEE
DETAIL A
CONT. ON ISI-13142-42A
HPCI (PS18-8"-ED)
CONT. ON ISI-782 HEAD
VENT (V15-2"-ED)
W-18
MSBJ-22
W-19
MSBJ-23
W-20
MSBJ-24
W-21
MSBJ-25
19
H-5
MSBK-26
MSH-3B
B-4
V-3
FE
N
FE-2-114B
W-22
MSBJ-27
20
W-23
MSBJ-28
20A
W-24
MSBJ-29
20B
W-25
MSBJ-30
EL. 936'-0"
CONT. ON ISI-786A
(PS15-2"-ED)
W-26
MSBJ-31
21
A02-80B
W-27
MSBJ-33
22
STEAM
CHASE
DRYWELL
PEN
X-7B
W-28*
MSBJ-35
*INACCESSIBLE
W-29
MSBJ-36
W-30
MSBJ-37
W-31
MSBJ-38
W-32
MSBJ-29
A02-86B
W-33
MSBJ-40
23
B-5
V-4
NO CONT.
NON-SAFETY
NO CONT.
RV2-71G
B-6
V-1
B-2
W-15
MSBJ-19
H-4
MSBK-17
MSH-2B
NO CONT.
RV2-71B
B-7
V-2
B-3
W-16
MSBJ-21
B-1
W-13
MSBJ-15
W-12
MSBJ-16
W-14
MSBJR-18
W-17
MSBJR-20
DETAIL A
NORTH
ISI
GE
CONST
= HANGER NO
= WELD NO.
ISI
= BOLT NO.
ISI
= VALVE NO.
NX-13142-34
NF-36271
NF-36271-1
REF: NH-95008-1,2
FILE NO:
NSP (M&SP)- MONTICELLO
ISI
DWN: TJH
CHKD: RAD
APPD:
SYSTEM: MAIN STEAM B
LINE: PS2-18"-ED
DWG: ISI-13142-34A
REV: 03

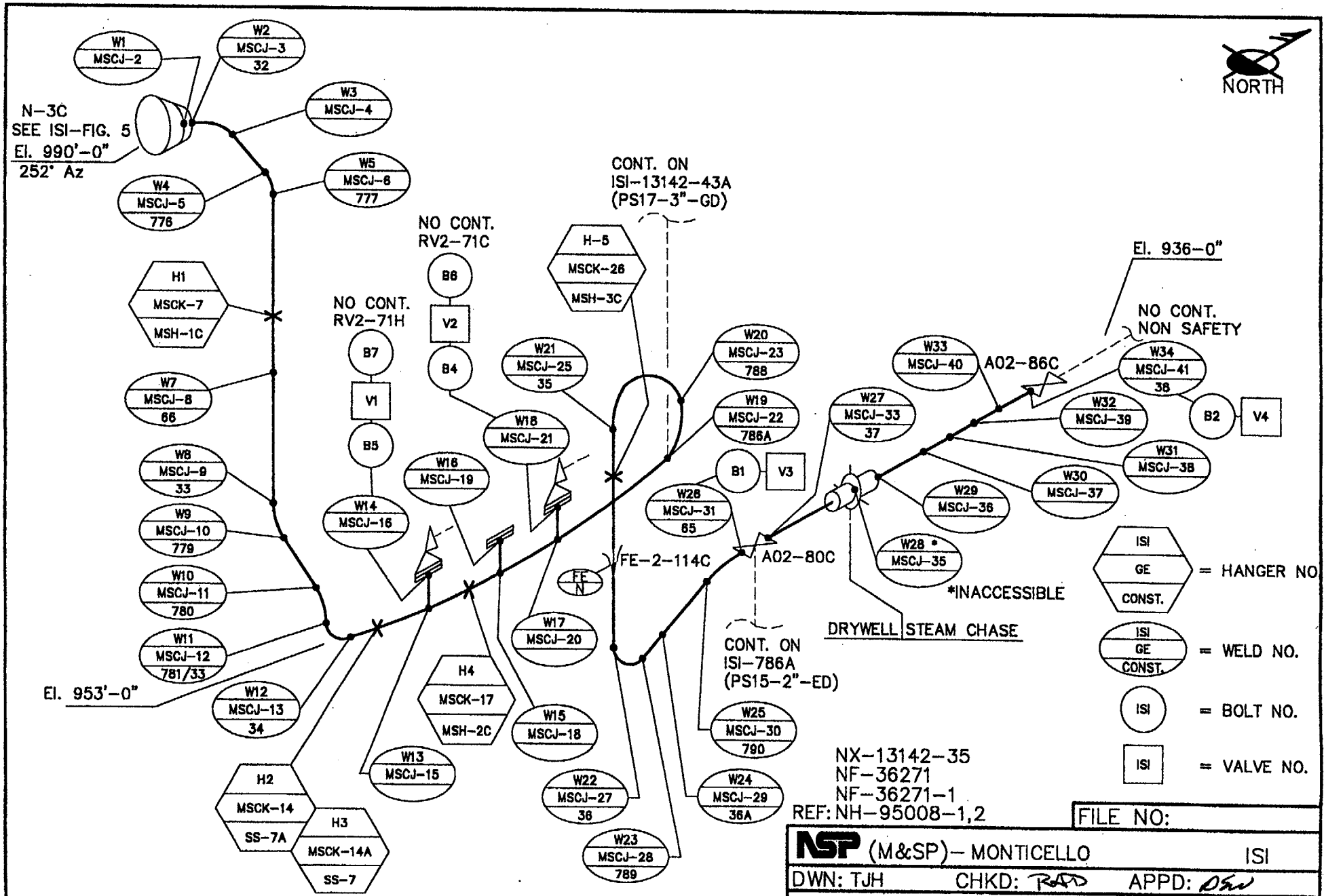
NORTH
N-3C
SEE ISI-FIG. 5
El. 990'-0"
252° Az
W1 MSCJ-2
W2 MSCJ-3 32
W3 MSCJ-4
W4 MSCJ-5 776
W5 MSCJ-6 777
H1 MSCK-7 MSH-1C
W7 MSCJ-8 66
W8 MSCJ-9 33
W9 MSCJ-10 779
W10 MSCJ-11 780
W11 MSCJ-12 781/33
El. 953'-0"
W12 MSCJ-13 34
H2 MSCK-14 SS-7A
H3 MSCK-14A SS-7
W13 MSCJ-15
H4 MSCK-17 MSH-2C
W14 MSCJ-16
W15 MSCJ-18
W16 MSCJ-19
W17 MSCJ-20
W18 MSCJ-21
W21 MSCJ-25 35
W22 MSCJ-27 36
W23 MSCJ-28 789
W24 MSCJ-29 36A
W25 MSCJ-30 790
W26 MSCJ-31 65
W27 MSCJ-33 37
W28 * MSCJ-35
W29 MSCJ-36
W30 MSCJ-37
W31 MSCJ-38
W32 MSCJ-39
W33 MSCJ-40
W34 MSCJ-41 38
W19 MSCJ-22 786A
W20 MSCJ-23 788
H-5 MSCK-26 MSH-3C
B6
V2
B4
B7
V1
B5
B1
V3
B2
V4
NO CONT. RV2-71C
NO CONT. RV2-71H
CONT. ON ISI-13142-43A (PS17-3"-GD)
CONT. ON ISI-786A (PS15-2"-ED)
FE-2-114C
FE N
A02-80C
A02-86C
El. 936-0"
NO CONT. NON SAFETY
*INACCESSIBLE
DRYWELL
STEAM CHASE
ISI GE CONST. = HANGER NO.
ISI GE CONST. = WELD NO.
ISI = BOLT NO.
ISI = VALVE NO.
NX-13142-35
NF-36271
NF-36271-1
REF: NH-95008-1,2
FILE NO:
NSP (M&SP)- MONTICELLO ISI
DWN: TJH CHKD: RAD APPD: DSW
SYSTEM: MAIN STEAM C
LINE: PS3-18"-ED
DWG: ISI-13142-35A REV: 03

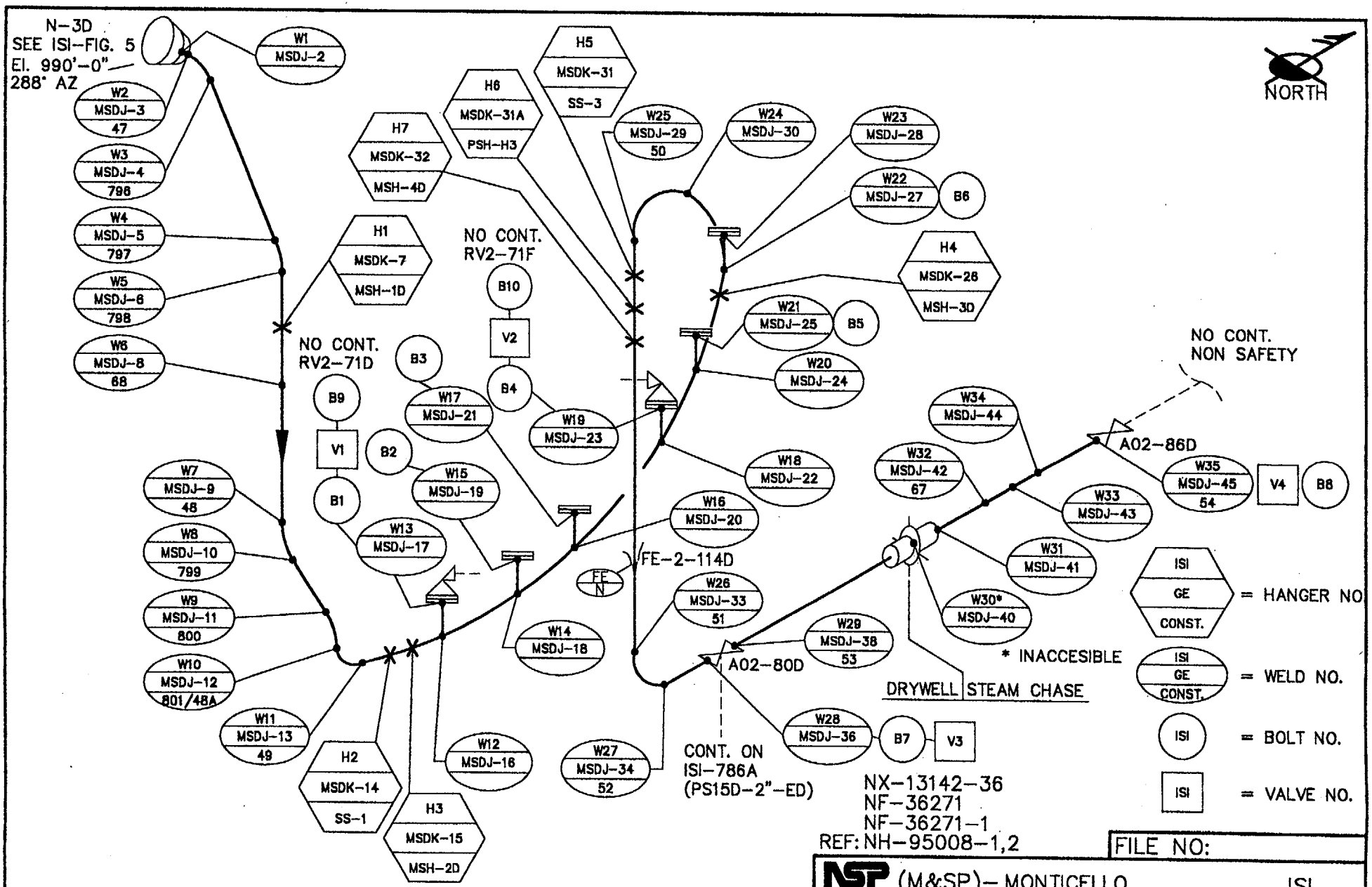
N-3D
SEE ISI-FIG. 5
El. 990'-0"
288° AZ
NORTH
W1 MSDJ-2
W2 MSDJ-3 47
W3 MSDJ-4 796
W4 MSDJ-5 797
W5 MSDJ-6 798
W6 MSDJ-8 68
W7 MSDJ-9 48
W8 MSDJ-10 799
W9 MSDJ-11 800
W10 MSDJ-12 801/48A
W11 MSDJ-13 49
W12 MSDJ-16
W13 MSDJ-17
W14 MSDJ-18
W15 MSDJ-19
W16 MSDJ-20
W17 MSDJ-21
W18 MSDJ-22
W19 MSDJ-23
W20 MSDJ-24
W21 MSDJ-25
W22 MSDJ-27
W23 MSDJ-28
W24 MSDJ-30
W25 MSDJ-29 50
W26 MSDJ-33 51
W27 MSDJ-34 52
W28 MSDJ-36
W29 MSDJ-38 53
W30* MSDJ-40
W31 MSDJ-41
W32 MSDJ-42 67
W33 MSDJ-43
W34 MSDJ-44
W35 MSDJ-45 54
H1 MSDK-7 MSH-1D
H2 MSDK-14 SS-1
H3 MSDK-15 MSH-2D
H4 MSDK-26 MSH-3D
H5 MSDK-31 SS-3
H6 MSDK-31A PSH-H3
H7 MSDK-32 MSH-4D
B1
B2
B3
B4
B5
B6
B7
B8
B9
B10
V1
V2
V3
V4
NO CONT. RV2-71D
NO CONT. RV2-71F
NO CONT. NON SAFETY
FE-2-114D
FE N
A02-80D
A02-86D
CONT. ON ISI-786A (PS15D-2"-ED)
DRYWELL
STEAM CHASE
* INACCESIBLE
ISI GE CONST. = HANGER NO
ISI GE CONST. = WELD NO.
ISI = BOLT NO.
ISI = VALVE NO.
NX-13142-36
NF-36271
NF-36271-1
REF: NH-95008-1,2
FILE NO:
NSP (M&SP)- MONTICELLO ISI
DWN: TJH CHKD: RAD APPD: DEW
SYSTEM: MAIN STEAM D
LINE: PS4-18"-ED
DWG: ISI-13142-36A REV: 03

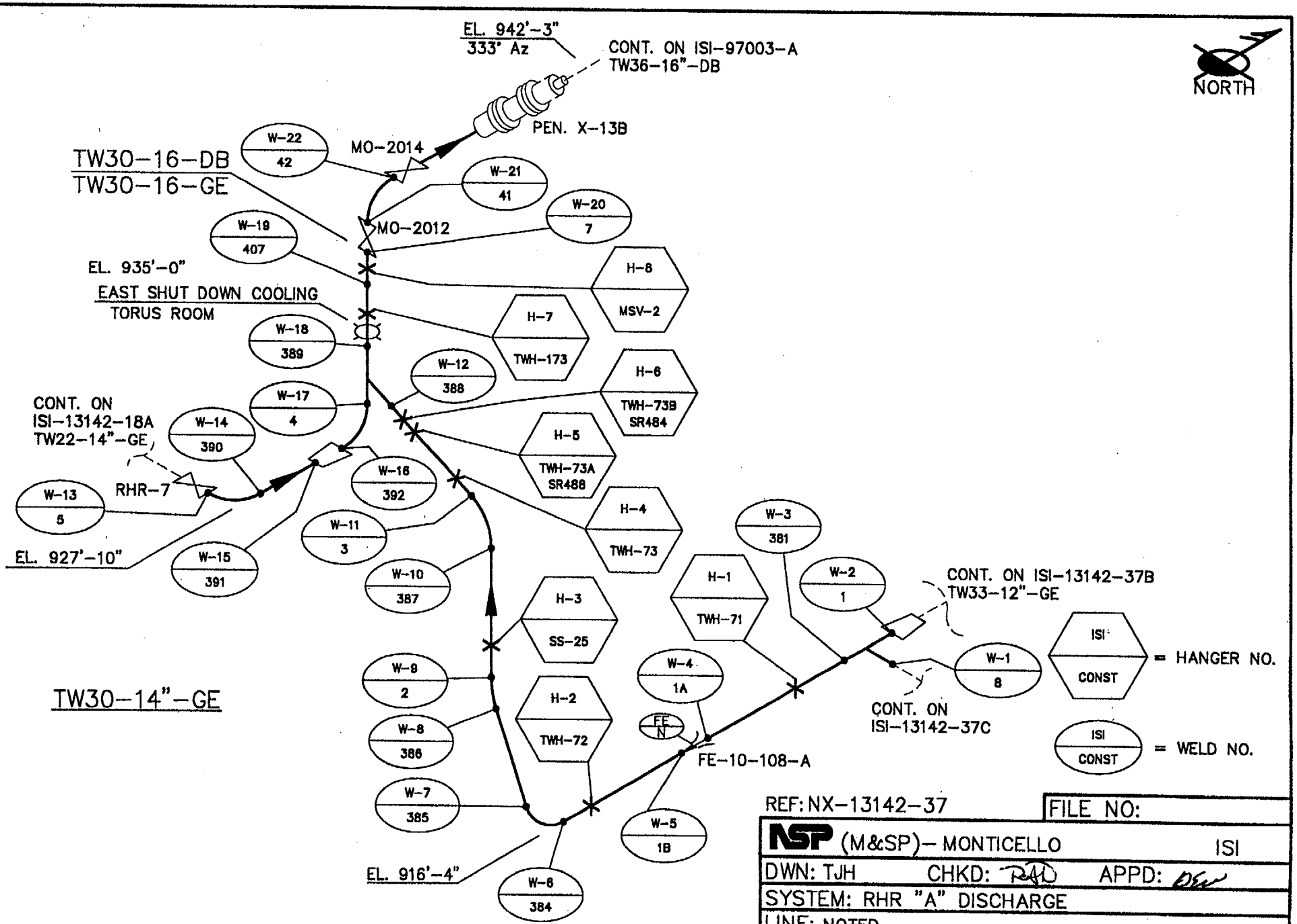

REF: NX-13142-37

FILE NO:

NSP (M&SP)- MONTICELLO ISI

DWN: TJH CHKD: RAD APPD: DEW

SYSTEM: RHR "A" DISCHARGE

LINE: NOTED

DWG: ISI-13142-37A REV: 03

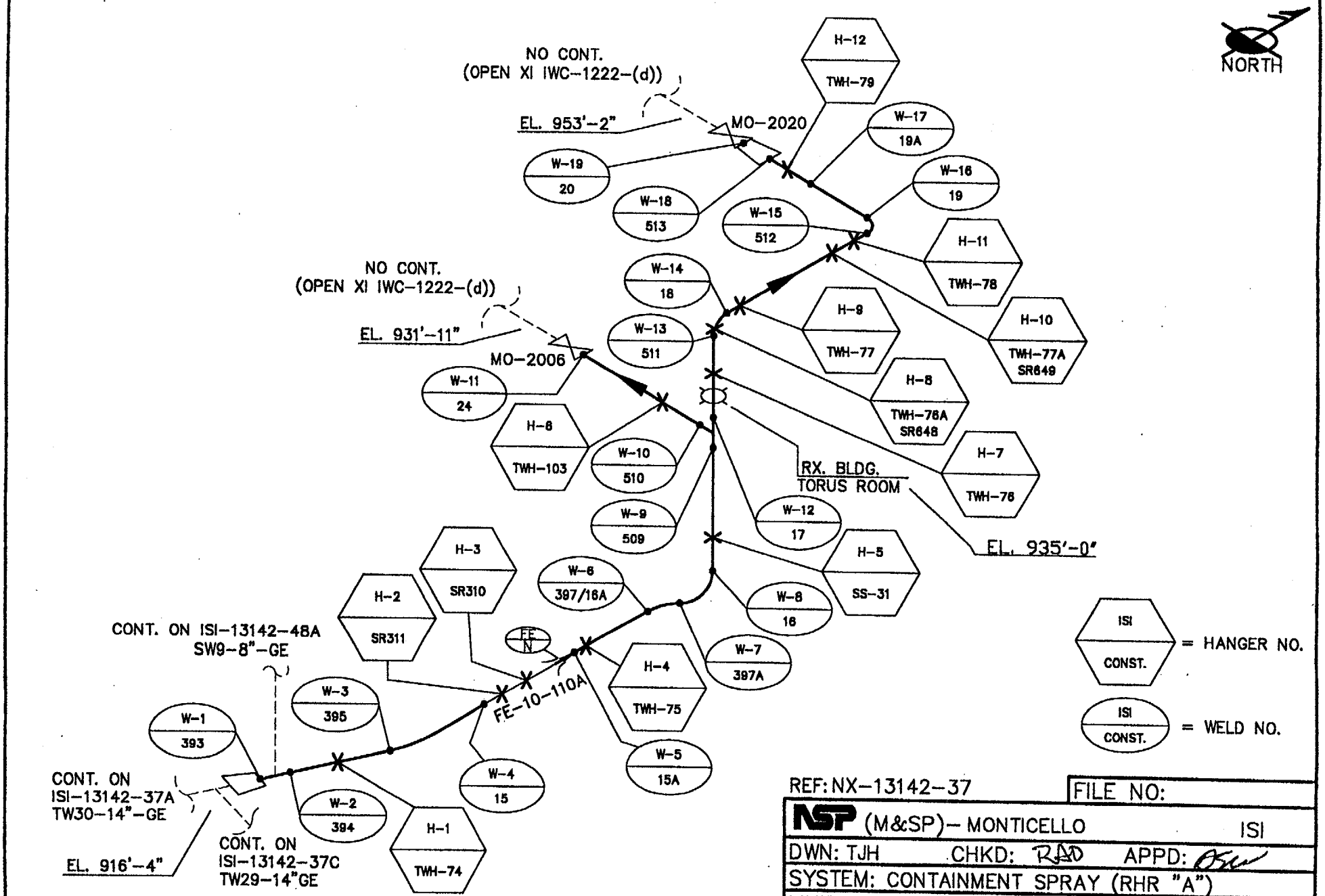

REF: NX-13142-37 FILE NO:

NSP (M&SP)- MONTICELLO ISI

DWN: TJH CHKD: RAD APPD:

SYSTEM: CONTAINMENT SPRAY (RHR "A")

LINE: TW33-12"-GE

DWG: ISI-13142-37B REV: 03

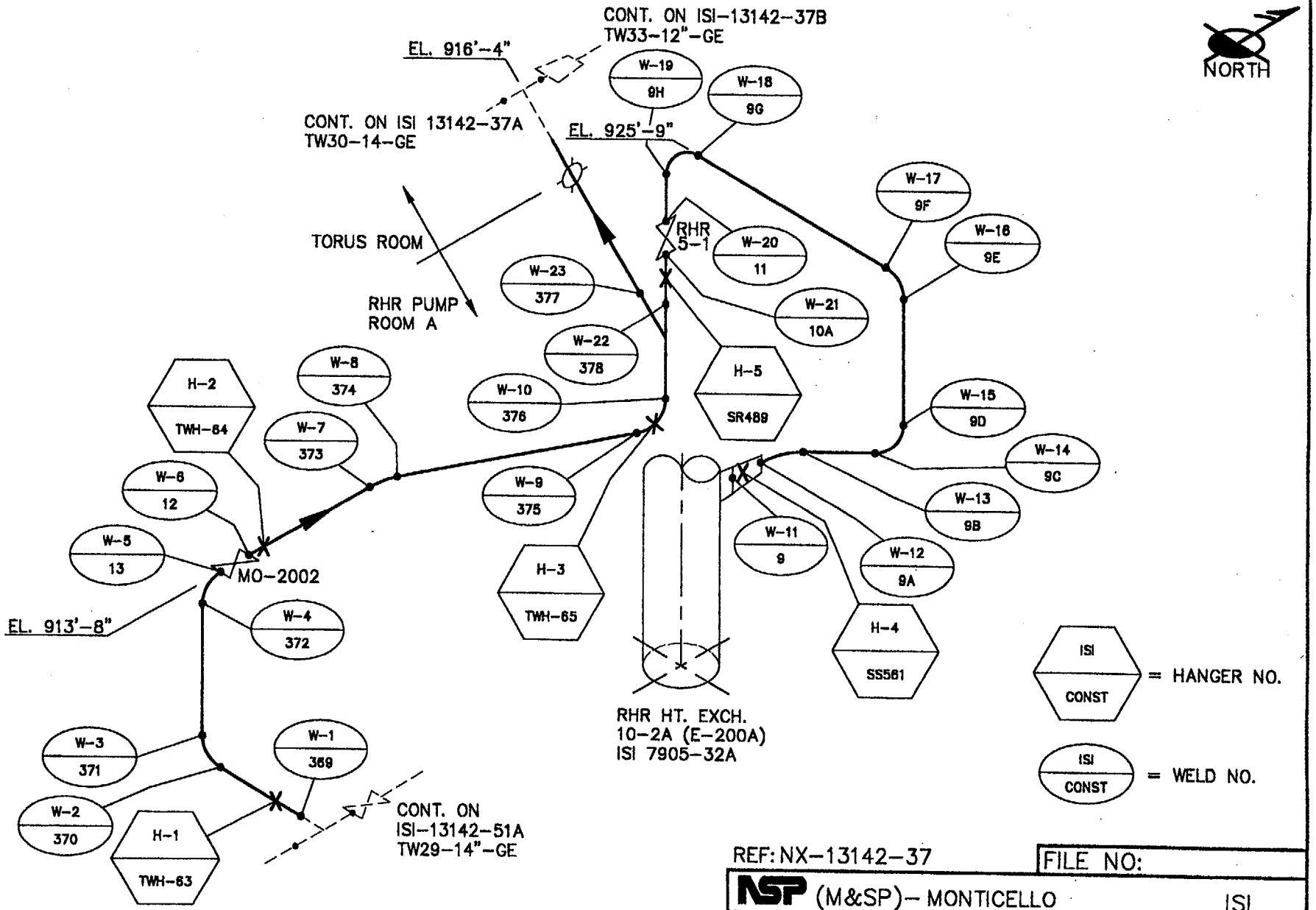

REF: NX-13142-37

FILE NO:

NSP (M&SP)- MONTICELLO ISI

DWN: TJH CHKD: RAD APPD: DGV

SYSTEM: RHR "A" DISCHARGE

LINE: TW30-14"-GE

DWG: ISI-13142-37C REV: 03

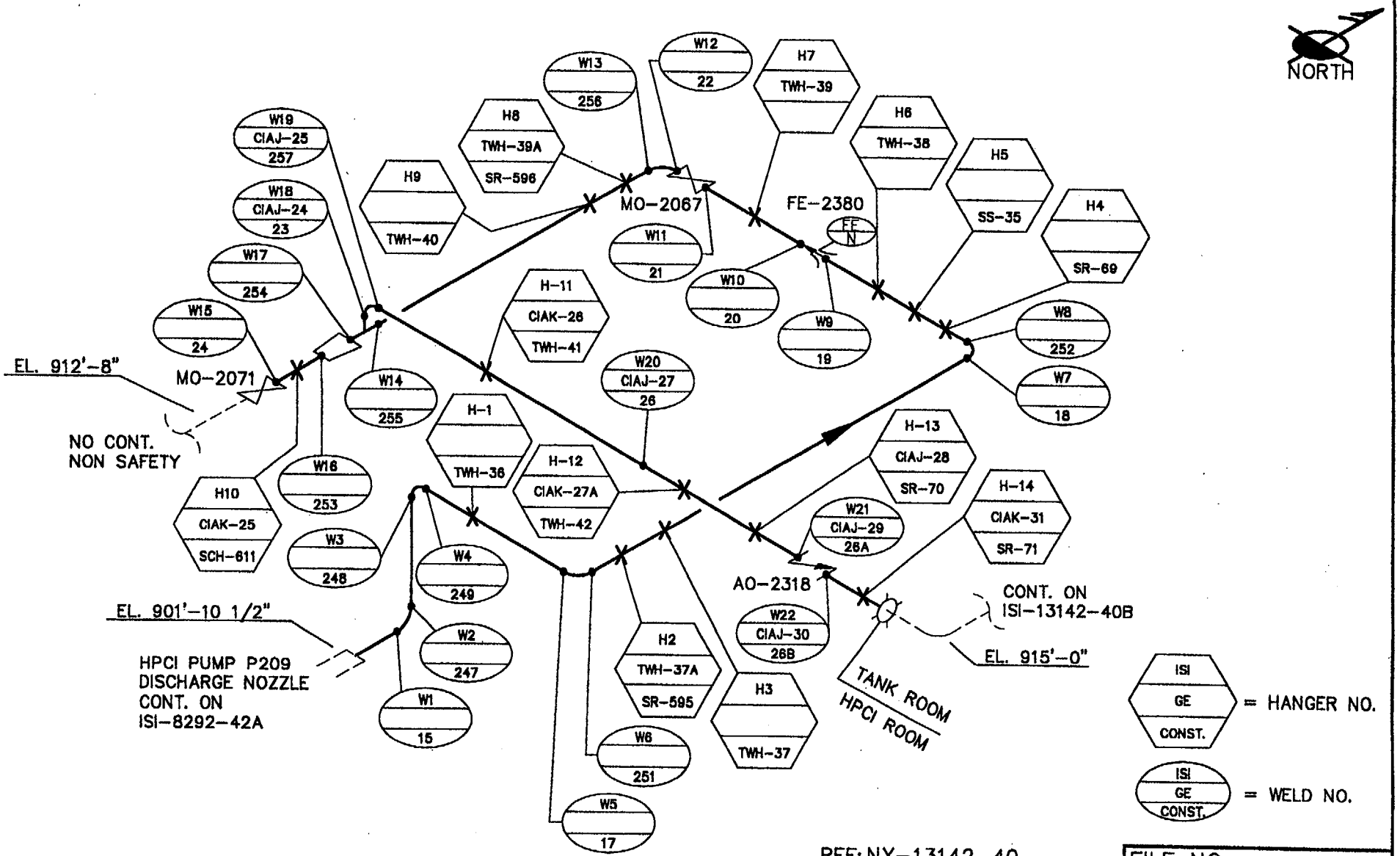

REF: NX-13142-40

FILE NO:

NSP (M&SP)- MONTICELLO ISI

DWN: TJH CHKD: RAD APPD: DSL

SYSTEM: HPCI WATER SIDE DISCHARGE

LINE: TW3-12"-ED

DWG: ISI-13142-40A REV: 03

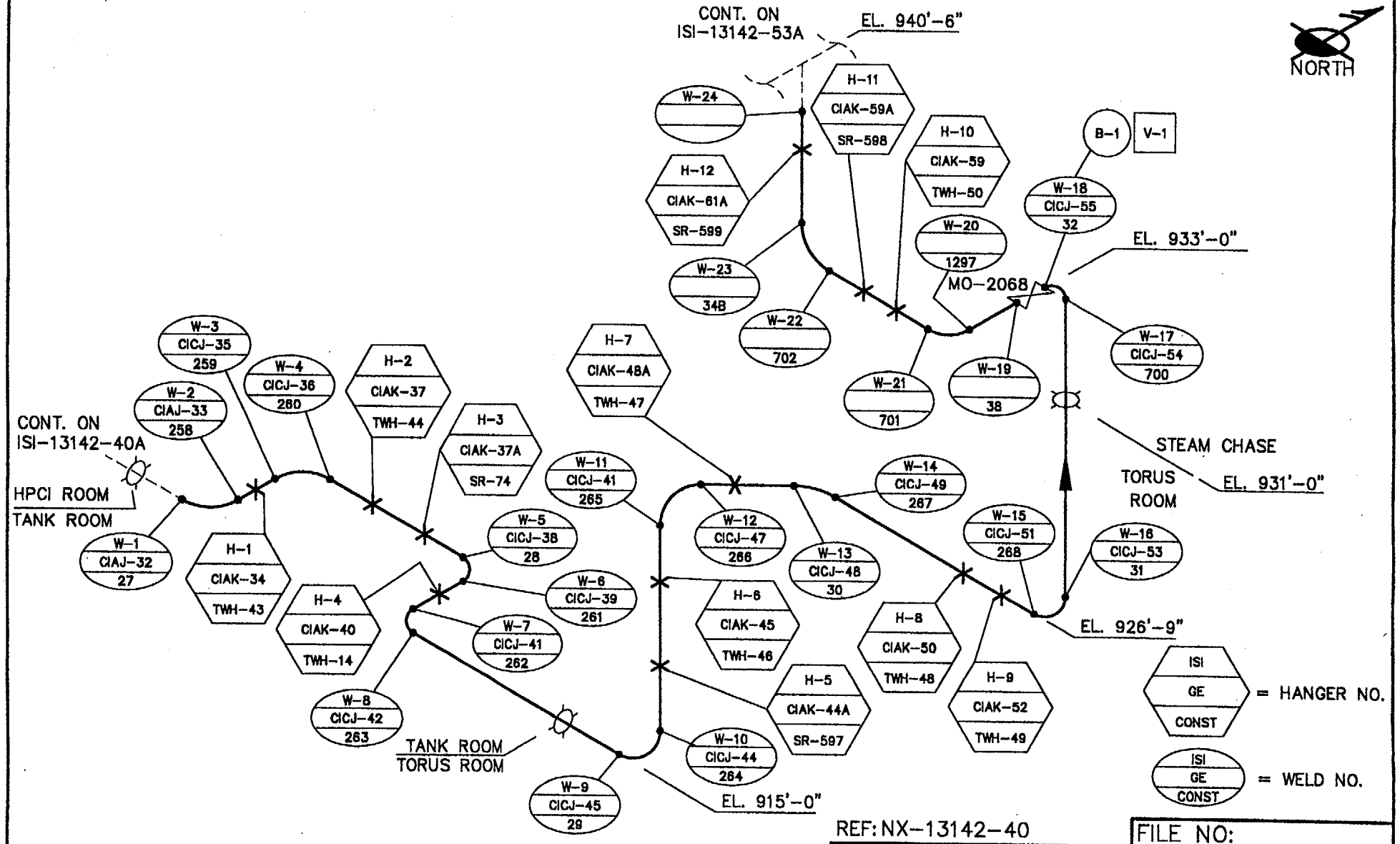

REF: NX-13142-40

FILE NO:

NSP (M&SP)- MONTICELLO ISI

DWN: TJH CHKD: RMD APPD: DEW

SYSTEM: HPCI WATER SIDE DISCHARGE

LINE: TW3-12"-ED

DWG: ISI-13142-40B REV: 03

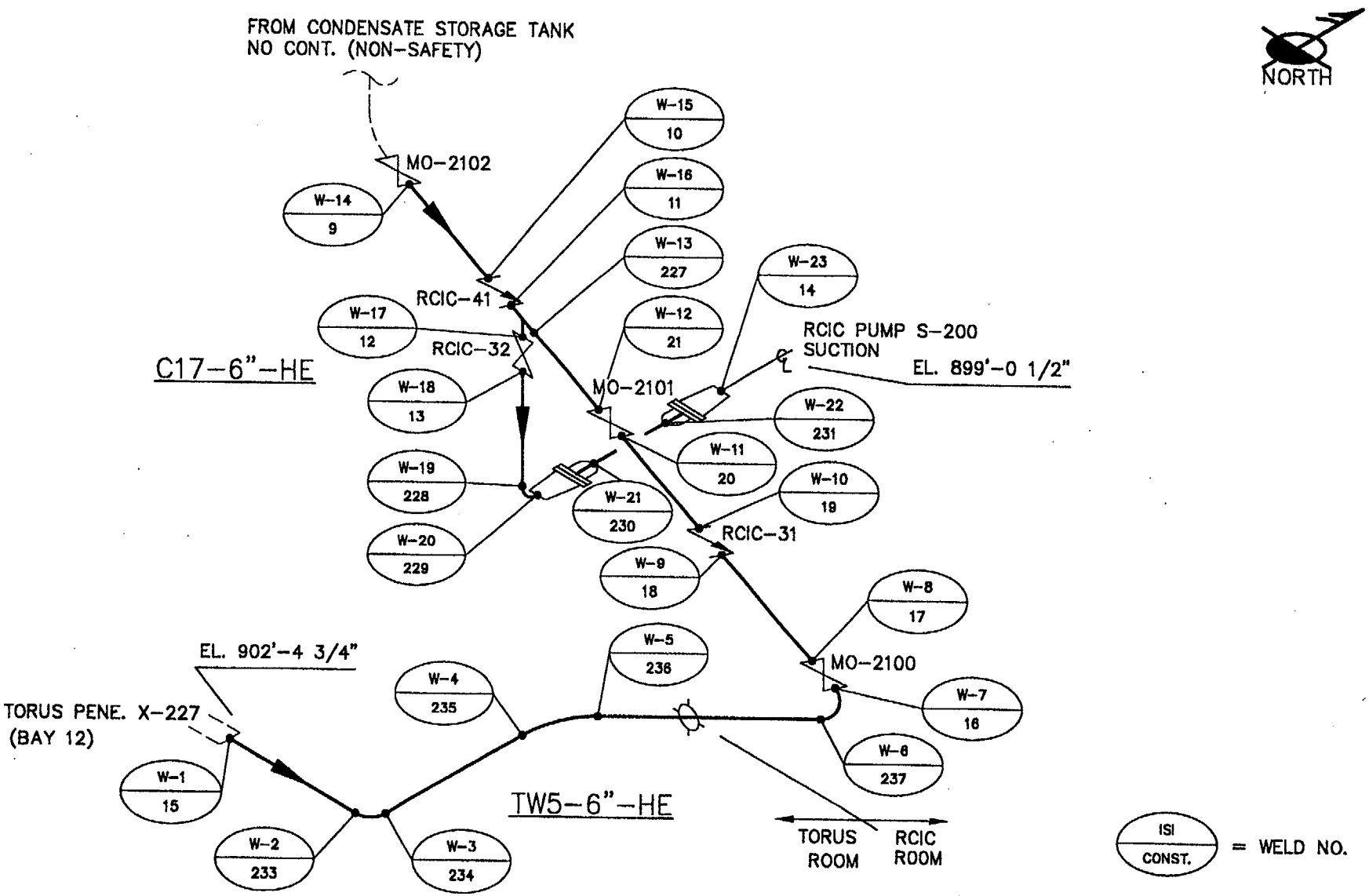

REF: NX-13142-41

FILE NO:

NSP (M&SP)– MONTICELLO ISI

DWN: TJH CHKD: RAD APPD:

SYSTEM: RCIC WATER SUCTION

LINE: TW5-6"-HE, C17-6"-HE

DWG: ISI-13142-41A REV: 03

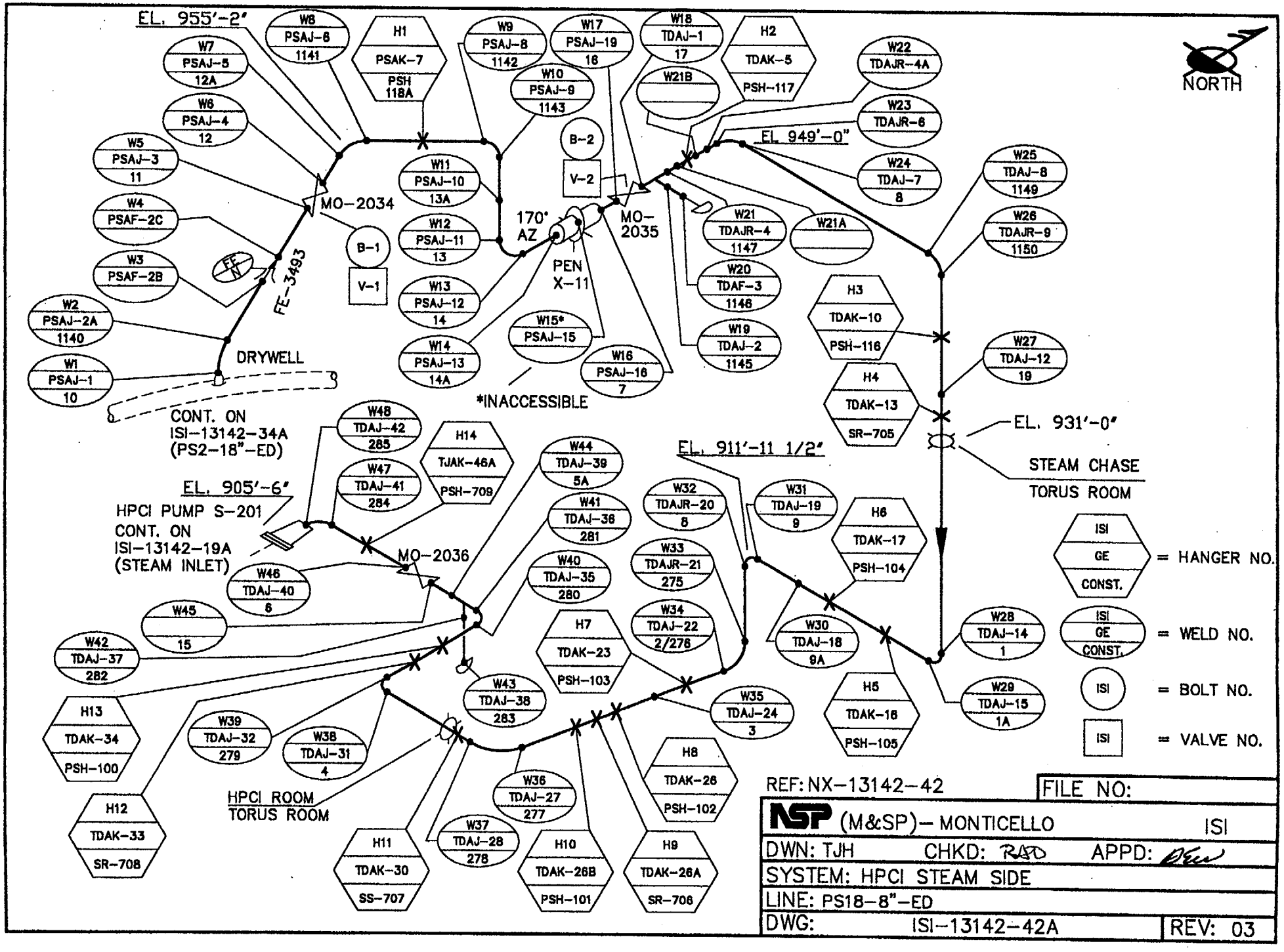
EL. 955'-2"
W8 PSAJ-6 1141
W7 PSAJ-5 12A
W6 PSAJ-4 12
W5 PSAJ-3 11
W4 PSAF-2C
W3 PSAF-2B
W2 PSAJ-2A 1140
W1 PSAJ-1 10
H1 PSAK-7 PSH 118A
W9 PSAJ-8 1142
W10 PSAJ-9 1143
W11 PSAJ-10 13A
W12 PSAJ-11 13
W13 PSAJ-12 14
W14 PSAJ-13 14A
W17 PSAJ-19 16
W18 TDAJ-1 17
W21B
H2 TDAK-5 PSH-117
B-2
V-2
MO-2034
B-1
V-1
FE-3493
170° AZ
PEN X-11
MO-2035
W15* PSAJ-15
W16 PSAJ-16 7
*INACCESSIBLE
DRYWELL
CONT. ON ISI-13142-34A (PS2-18"-ED)
W22 TDAJR-4A
W23 TDAJR-6
W24 TDAJ-7 8
EL. 949'-0"
W21 TDAJR-4 1147
W20 TDAF-3 1146
W19 TDAJ-2 1145
W21A
W25 TDAJ-8 1149
W26 TDAJR-9 1150
H3 TDAK-10 PSH-116
H4 TDAK-13 SR-705
W27 TDAJ-12 19
EL. 931'-0"
STEAM CHASE
TORUS ROOM
EL. 911'-11 1/2"
W48 TDAJ-42 285
W47 TDAJ-41 284
H14 TJAK-46A PSH-709
EL. 905'-6"
HPCI PUMP S-201
CONT. ON ISI-13142-19A (STEAM INLET)
MO-2036
W46 TDAJ-40 6
W45 15
W42 TDAJ-37 282
W44 TDAJ-39 5A
W41 TDAJ-36 281
W40 TDAJ-35 280
W43 TDAJ-38 283
W32 TDAJR-20 8
W33 TDAJR-21 275
W34 TDAJ-22 2/278
W31 TDAJ-19 9
H6 TDAK-17 PSH-104
H7 TDAK-23 PSH-103
W30 TDAJ-18 9A
W35 TDAJ-24 3
W28 TDAJ-14 1
W29 TDAJ-15 1A
H5 TDAK-16 PSH-105
H13 TDAK-34 PSH-100
W39 TDAJ-32 279
W38 TDAJ-31 4
H12 TDAK-33 SR-708
HPCI ROOM TORUS ROOM
H11 TDAK-30 SS-707
W36 TDAJ-27 277
W37 TDAJ-28 278
H10 TDAK-26B PSH-101
H8 TDAK-26 PSH-102
H9 TDAK-26A SR-706
NORTH
ISI GE CONST. = HANGER NO.
ISI GE CONST. = WELD NO.
ISI = BOLT NO.
ISI = VALVE NO.
REF: NX-13142-42
FILE NO:
NSP (M&SP)- MONTICELLO ISI
DWN: TJH CHKD: RAD APPD:
SYSTEM: HPCI STEAM SIDE
LINE: PS18-8"-ED
DWG: ISI-13142-42A
REV: 03

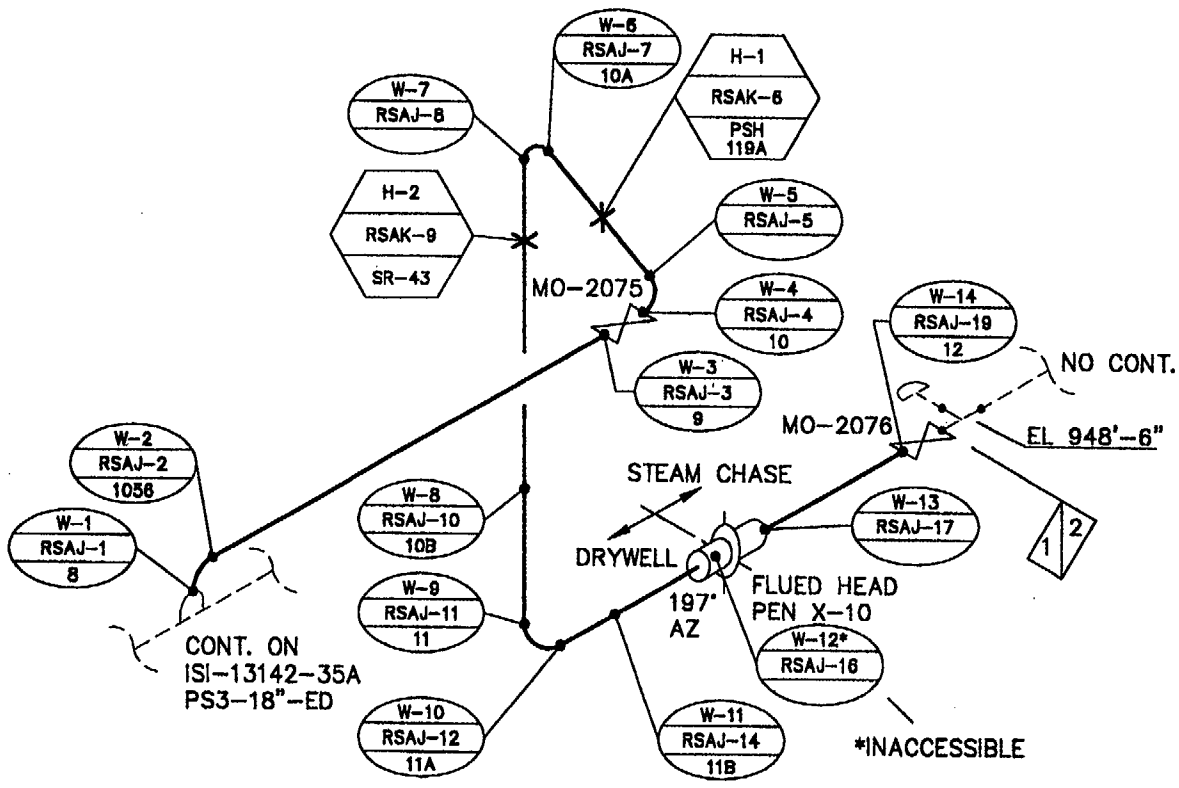

REF: NX-13142-43

FILE NO:

NSP (M&SP) – MONTICELLO ISI

DWN: TJH CHKD: R&D APPD: DSE

SYSTEM: RCIC STEAM SIDE

LINE: PS17-3"-ED

DWG: ISI-13142-43A REV: 03

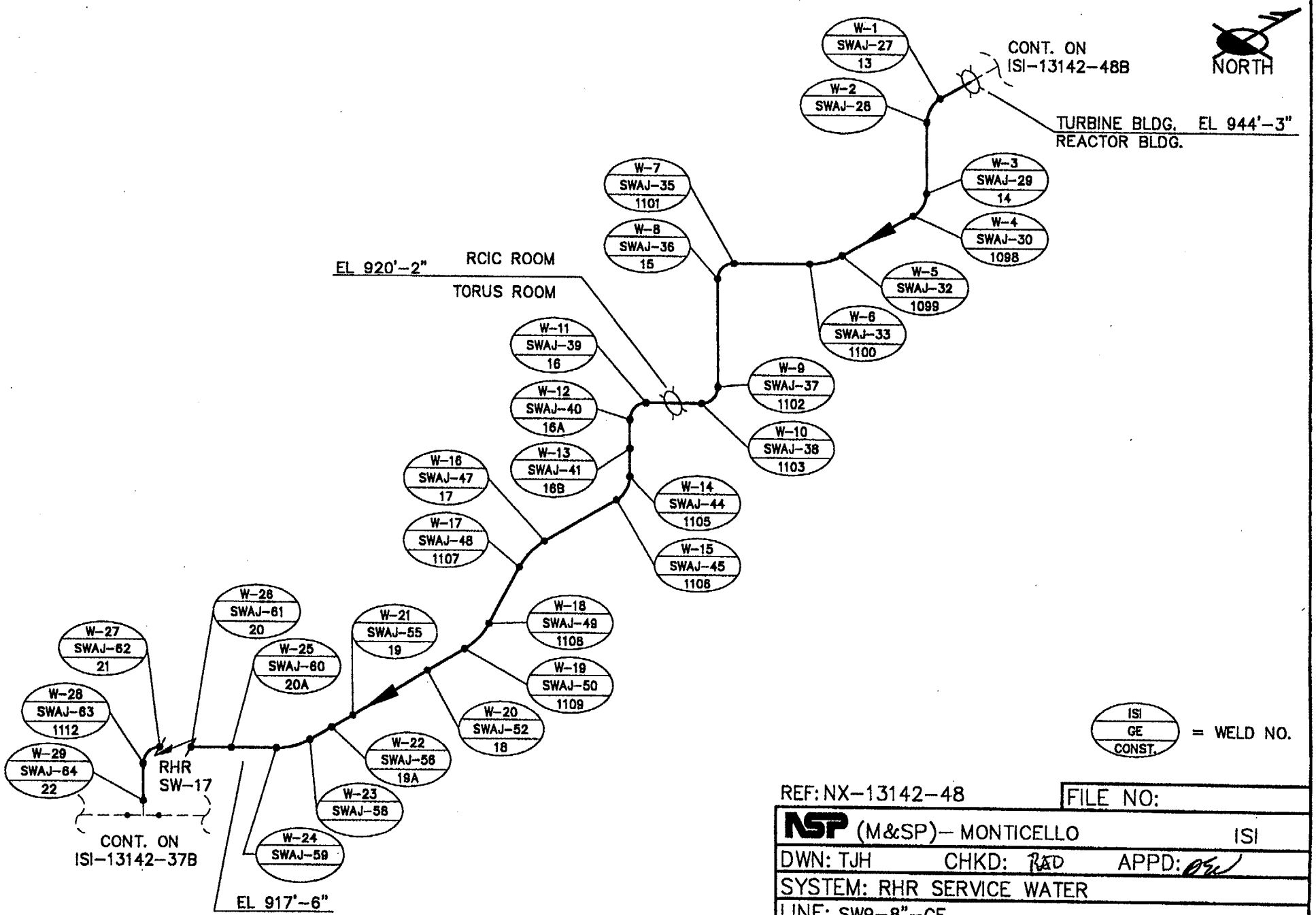

REF: NX-13142-48

FILE NO:

NSP (M&SP)– MONTICELLO ISI

DWN: TJH CHKD: RAD APPD: OEW

SYSTEM: RHR SERVICE WATER

LINE: SW9-8"-GE

DWG: ISI-13142-48A REV: 03

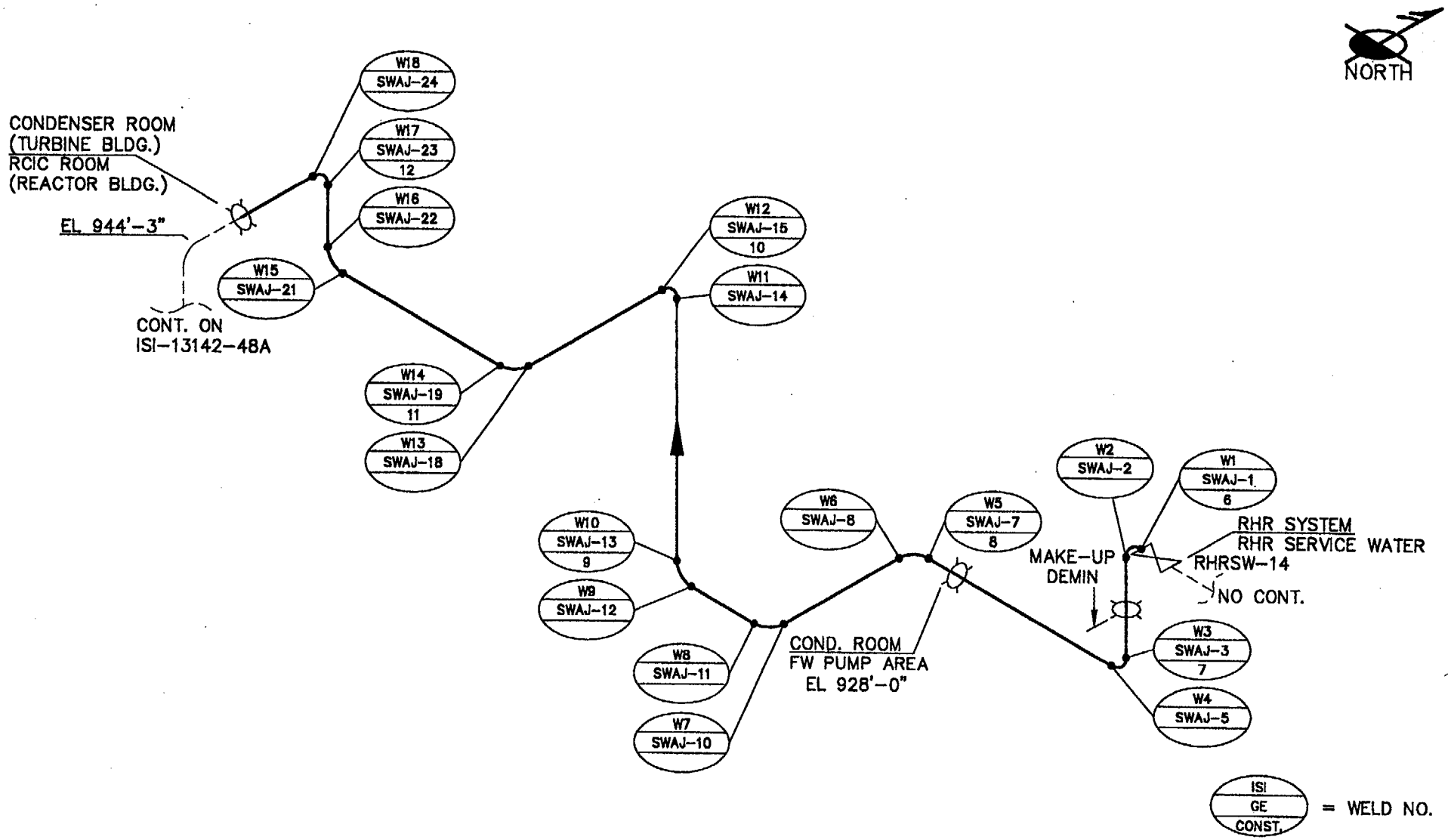

REF: NX-13142-48

FILE NO:

NSP (M&SP)- MONTICELLO ISI

DWN: TJH CHKD: RAD APPD: DEL

SYSTEM: RHR SERVICE WATER

LINE: SW9-8"-GE

DWG: ISI-13142-48B REV: 03

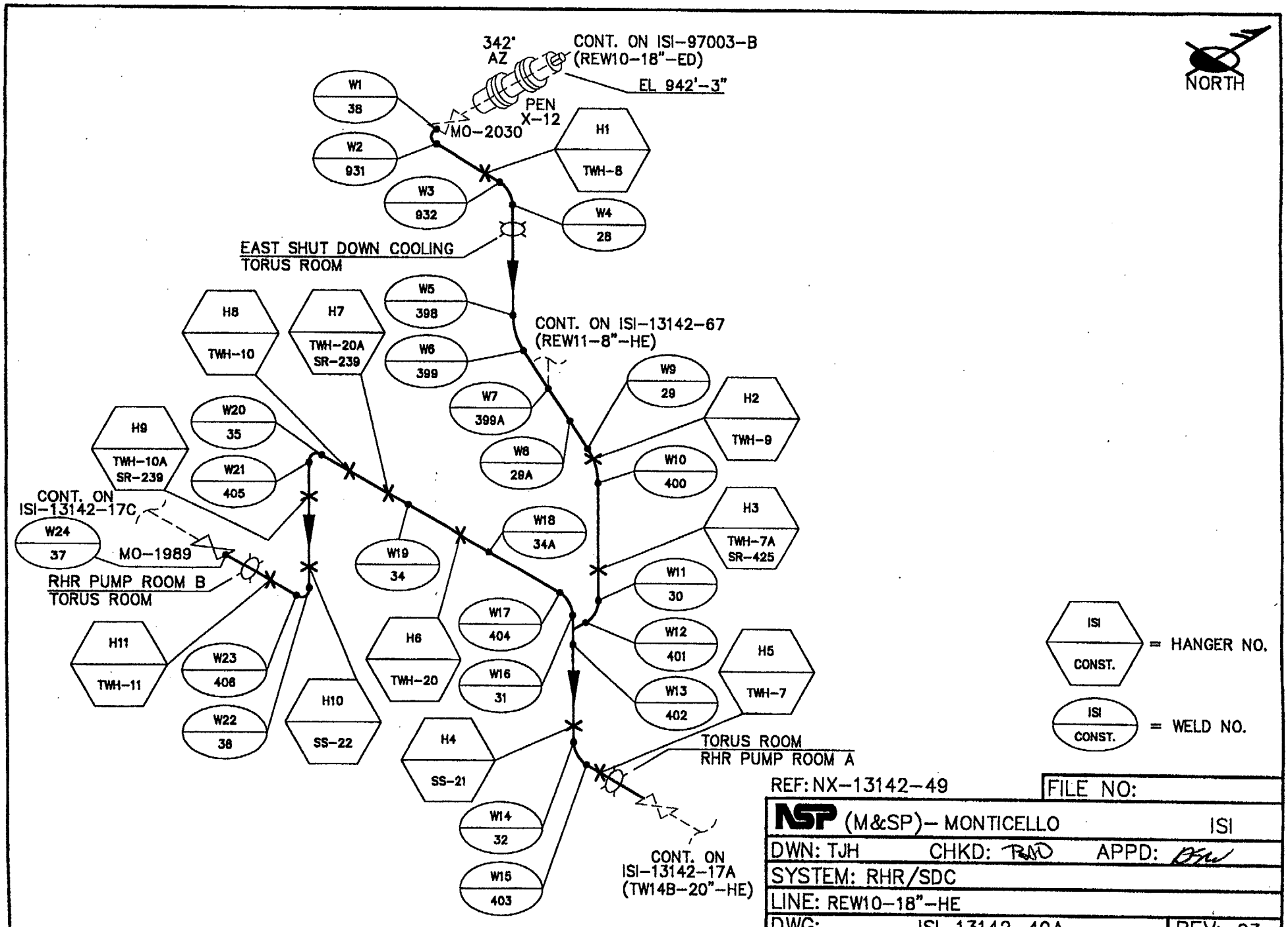

REF: NX-13142-49

FILE NO:

NSP (M&SP)– MONTICELLO ISI

DWN: TJH CHKD: RMD APPD: DSH

SYSTEM: RHR/SDC

LINE: REW10-18"-HE

DWG: ISI-13142-49A REV: 03

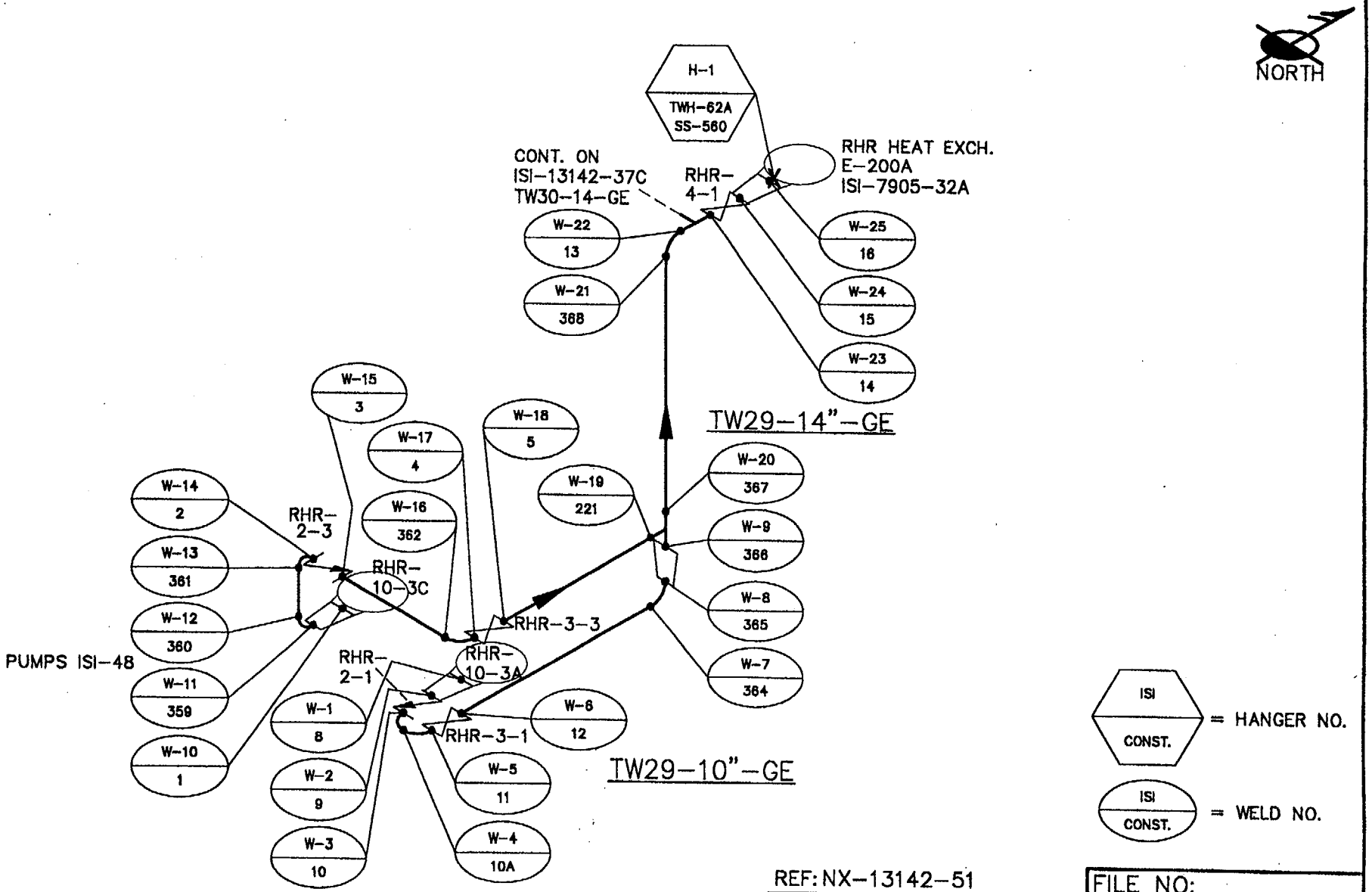

REF: NX-13142-51

FILE NO:

NSP (M&SP)- MONTICELLO ISI

DWN: TJH CHKD: RBD APPD: DEW

SYSTEM: RHR A

LINE: NOTED

DWG: ISI-13142-51A REV: 03

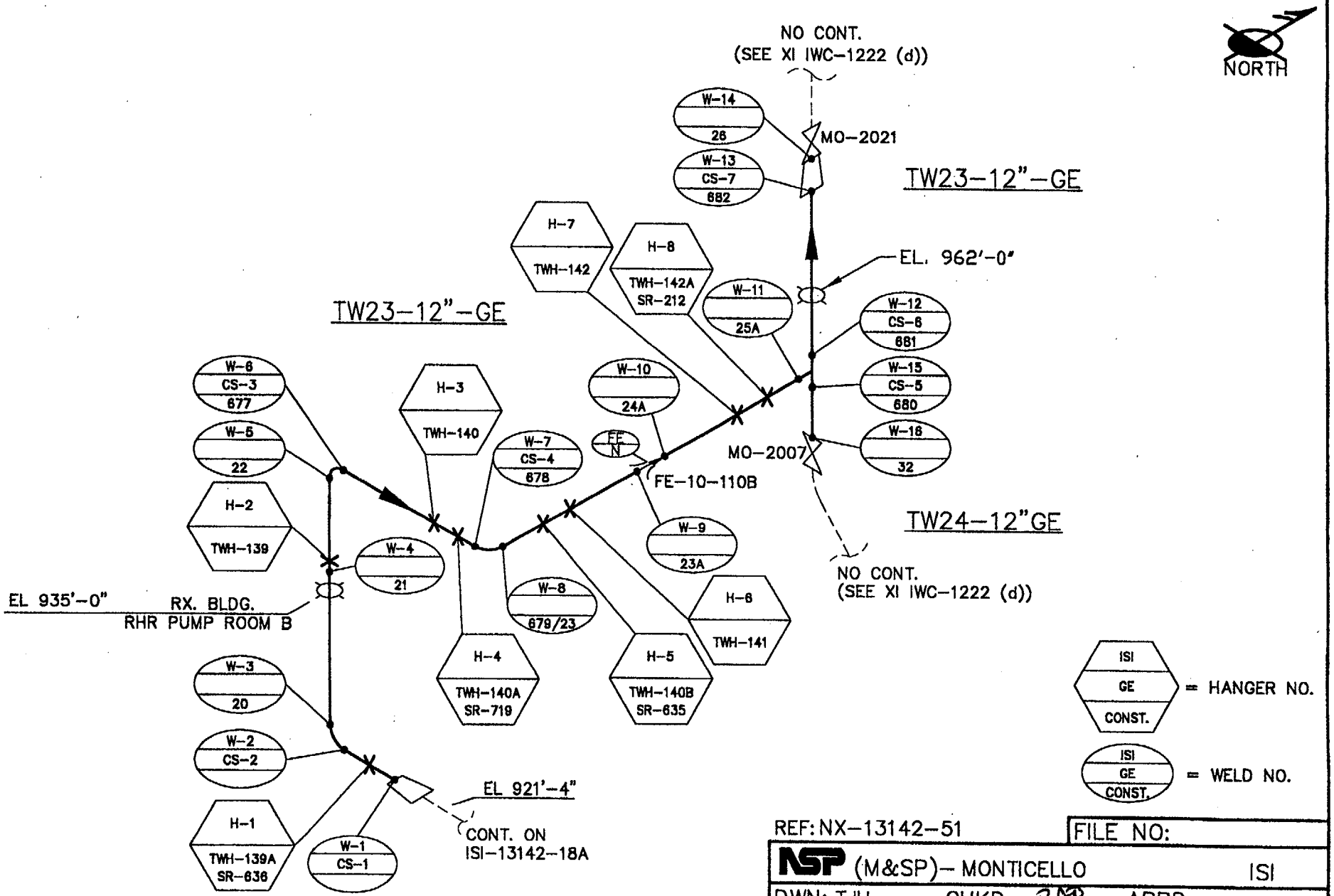

REF: NX-13142-51

FILE NO:

NSP (M&SP)- MONTICELLO ISI

DWN: TJH CHKD: RAD APPD: DEW

SYSTEM: RHR B

LINE: NOTED

DWG: ISI-13142-51B REV: 03

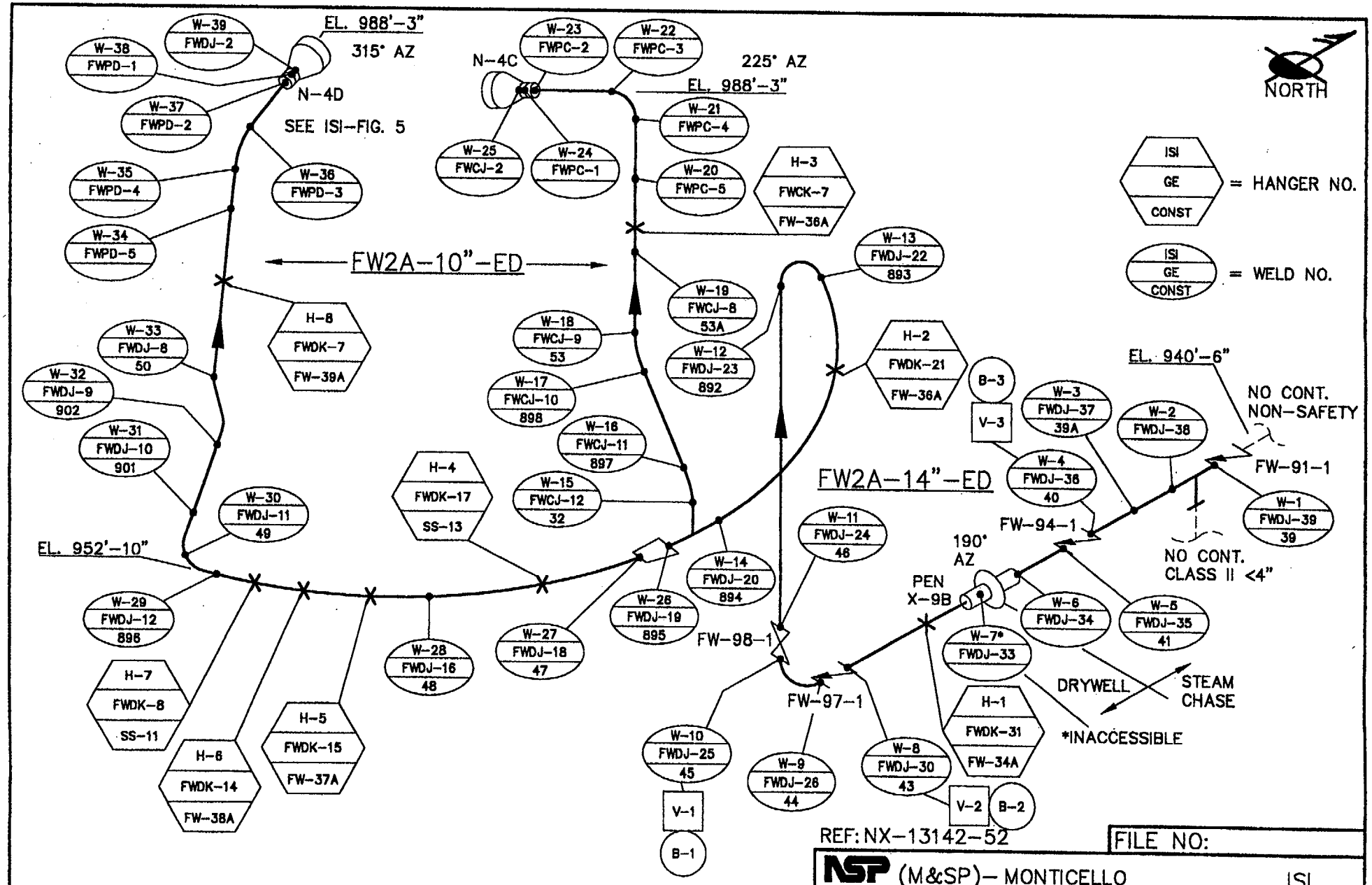

REF: NX-13142-52

FILE NO:	
NSP (M&SP)- MONTICELLO	ISI
DWN: TJH CHKD: RAD APPD: DEW	
SYSTEM: FEEDWATER C & D	
LINE: NOTED	
DWG: ISI-13142-52A	REV: 03

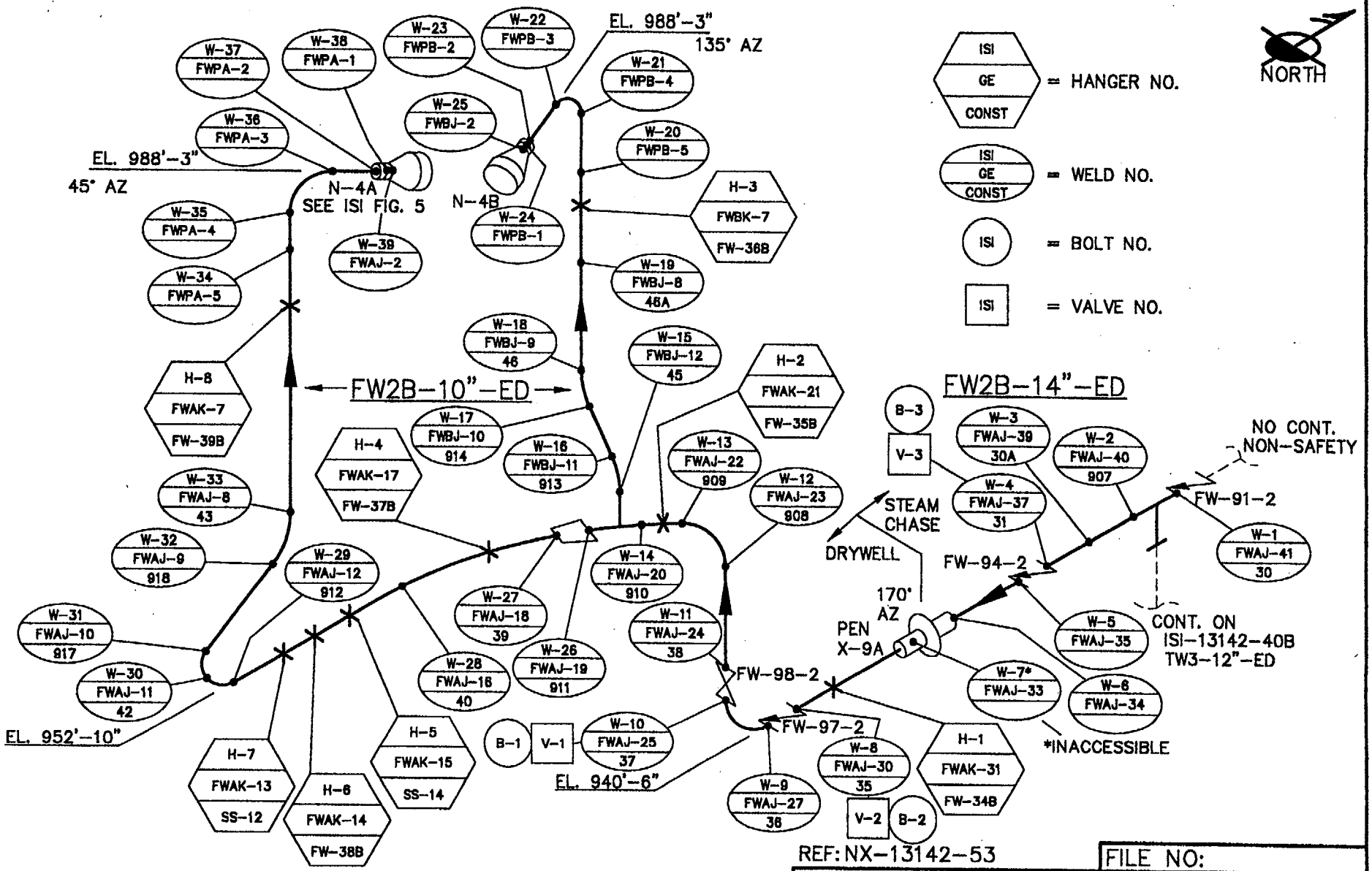

REF: NX-13142-53

FILE NO:

NSP (M&SP)- MONTICELLO ISI

DWN: TJH CHKD: RAD APPD:

SYSTEM: FEEDWATER A & B

LINE: FW29-10"-ED & FW29-14"-ED

DWG: ISI-13142-53A REV: 03

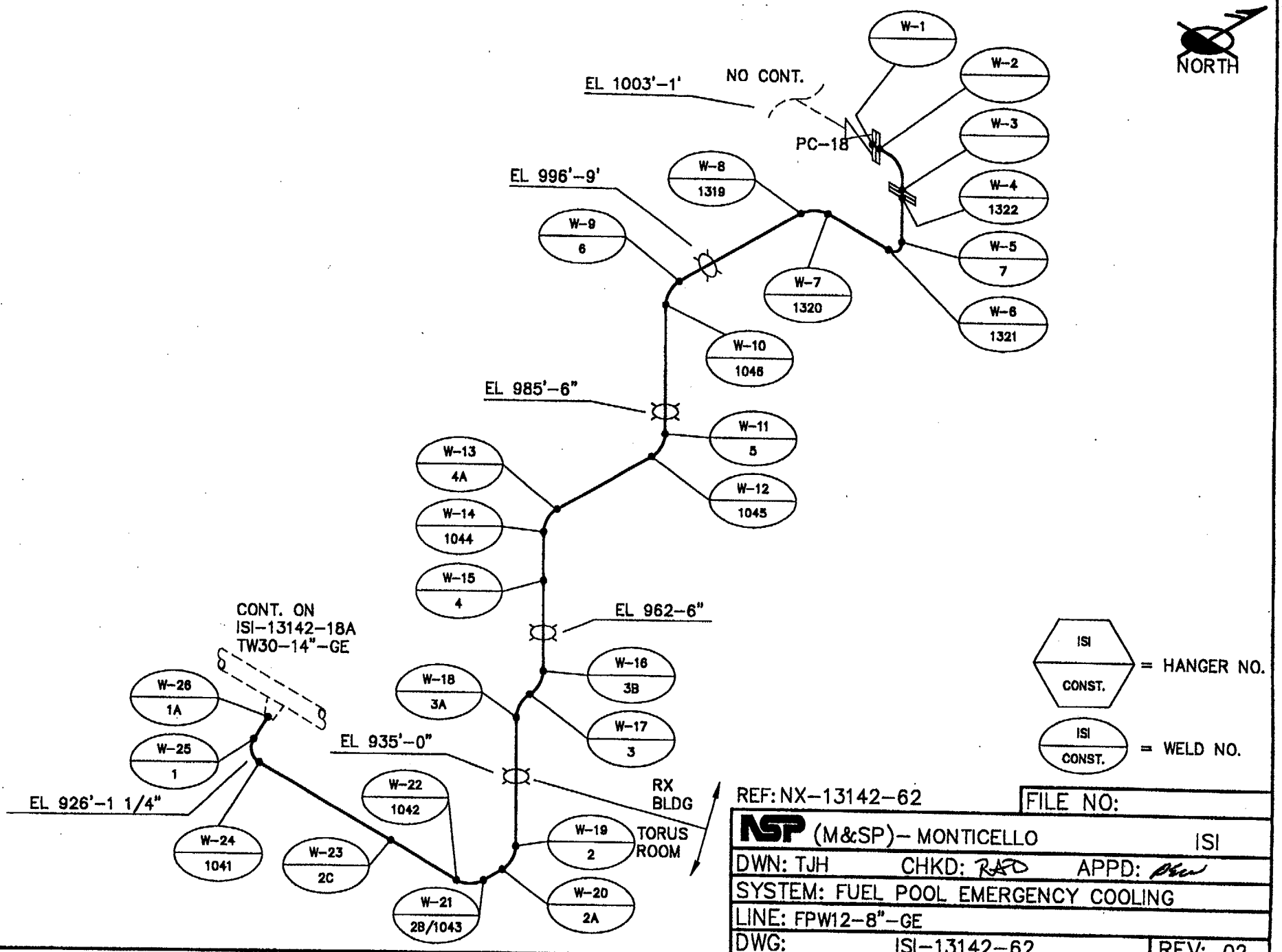
NORTH
EL 1003'-1'
NO CONT.
PC-18
W-1
W-2
W-3
W-4
1322
W-5
7
W-6
1321
W-7
1320
W-8
1319
EL 996'-9'
W-9
6
W-10
1046
EL 985'-6"
W-11
5
W-12
1045
W-13
4A
W-14
1044
W-15
4
EL 962-6"
W-16
3B
W-17
3
W-18
3A
EL 935'-0"
RX
BLDG
TORUS
ROOM
W-19
2
W-20
2A
W-21
2B/1043
W-22
1042
W-23
2C
W-24
1041
EL 926'-1 1/4"
W-25
1
W-26
1A
CONT. ON
ISI-13142-18A
TW30-14"-GE
ISI
CONST.
= HANGER NO.
ISI
CONST.
= WELD NO.
REF: NX-13142-62
FILE NO:
NSP (M&SP)- MONTICELLO
ISI
DWN: TJH
CHKD: RAD
APPD:
SYSTEM: FUEL POOL EMERGENCY COOLING
LINE: FPW12-8"-GE
DWG: ISI-13142-62
REV: 02

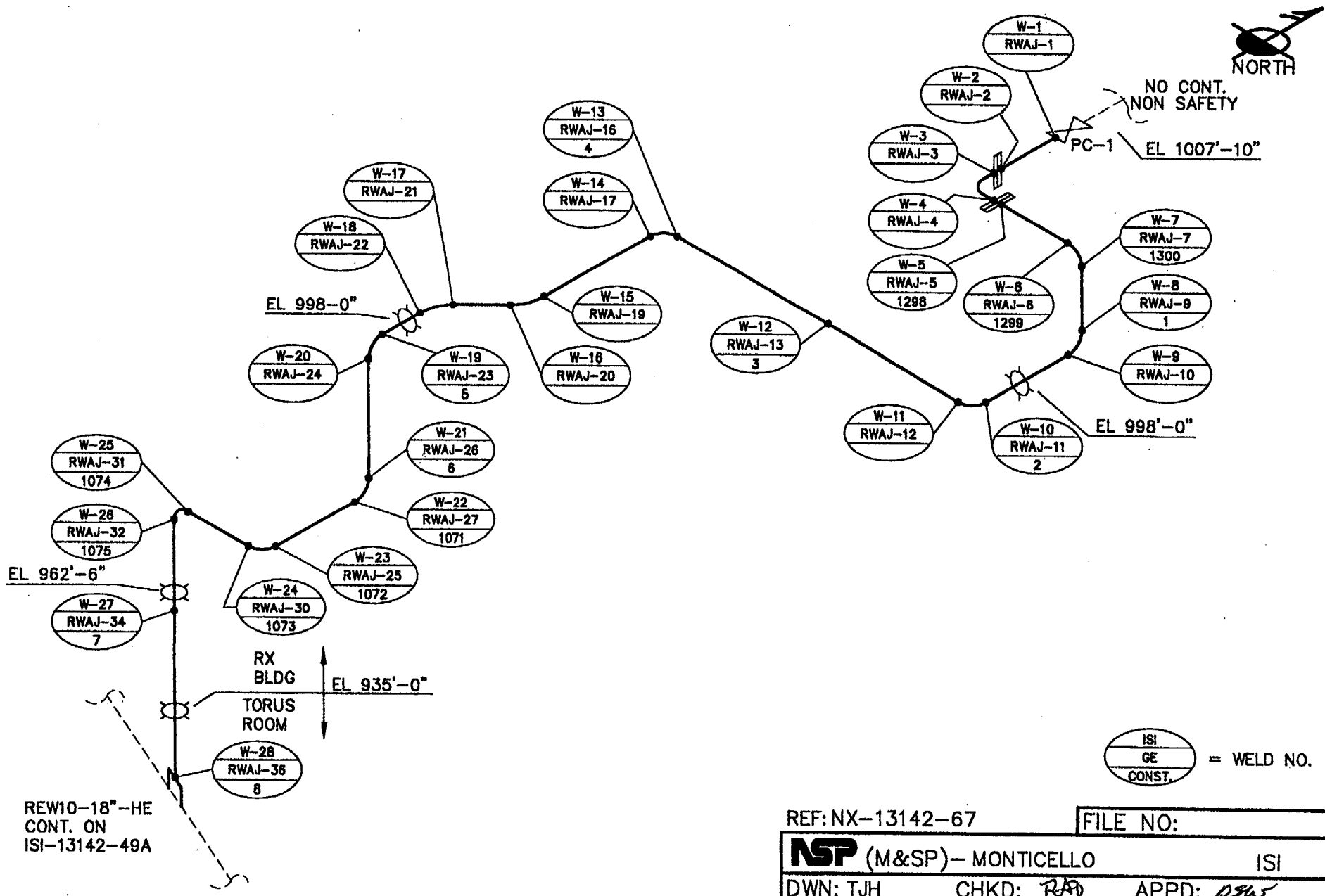

REF: NX-13142-67

FILE NO:

NSP (M&SP)– MONTICELLO ISI

DWN: TJH CHKD: RAD APPD: DSW

SYSTEM: FUEL POOL EMERGENCY COOLING

LINE: RGW11-8"-HG

DWG: ISI-13142-67 REV: 02

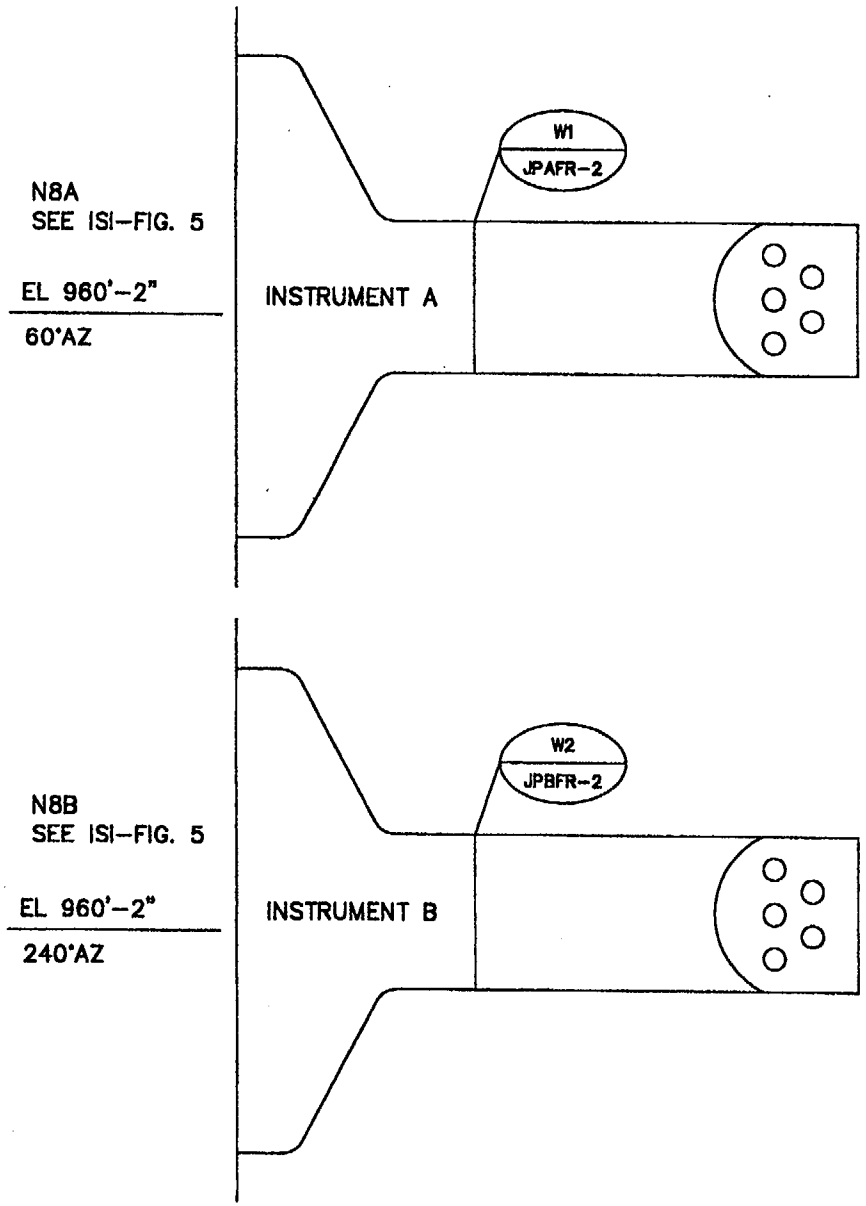

ISI / CONST. = WELD NO.

NOTE: LOCATED IN DRYWELL

REF:

FILE NO:

NSP (M&SP)– MONTICELLO ISI

DWN: TJH CHKD: DSW APPD: DSW

SYSTEM: JET PUMP INSTRUMENT NOZZLE

LINE:

DWG: ISI–16 REV: 03

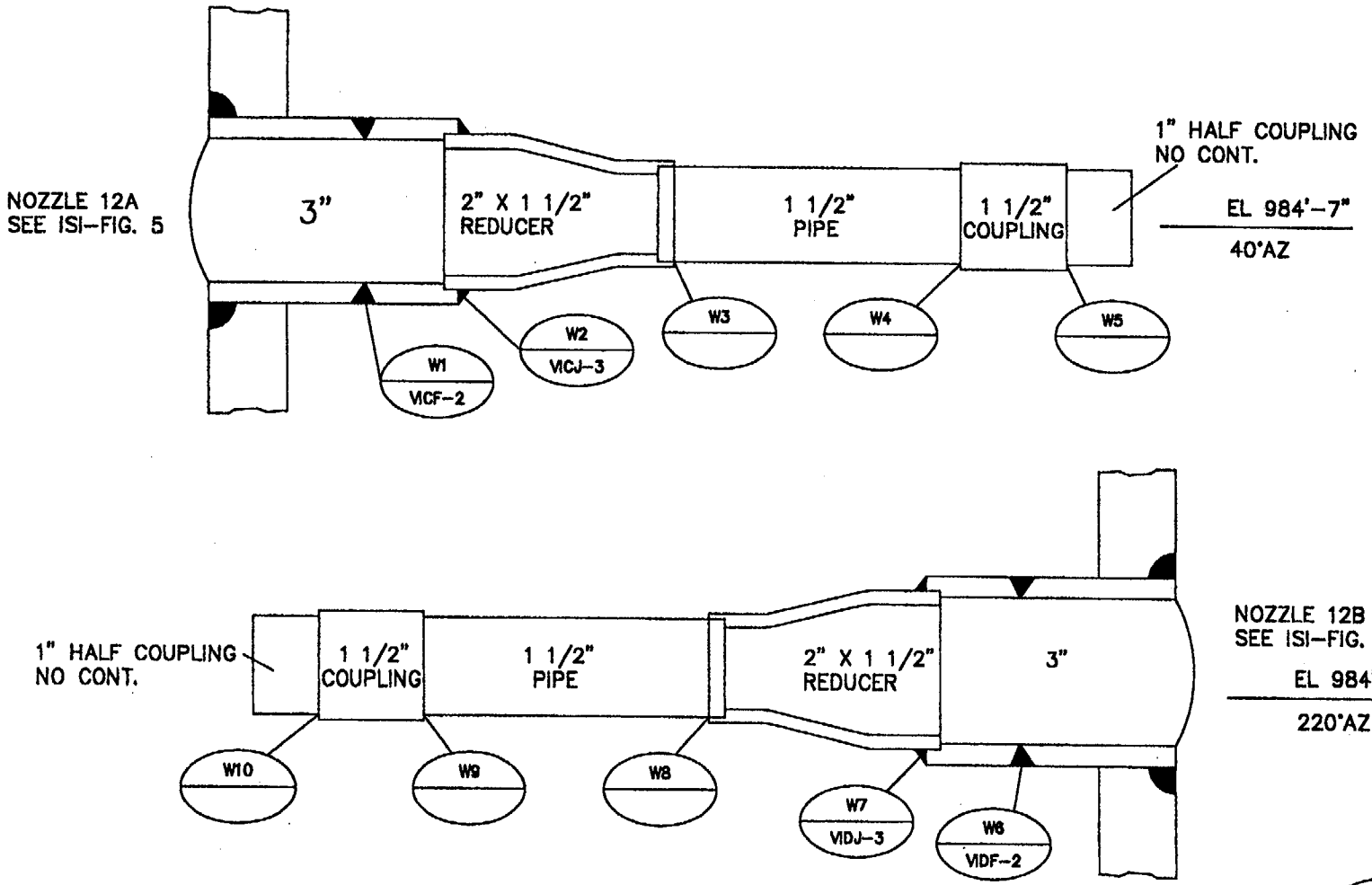

N12A REF: NF-97010
N12B REF: NF-97009

FILE NO:	
NSP (M&SP)- MONTICELLO	ISI
DWN: TJH CHKD: APPD:	
SYSTEM: RX INSTRUMENT NOZZLES	
LINE: RLM3-1"-DCA & RLM4-1"-DCA	
DWG: ISI-19	REV: 03

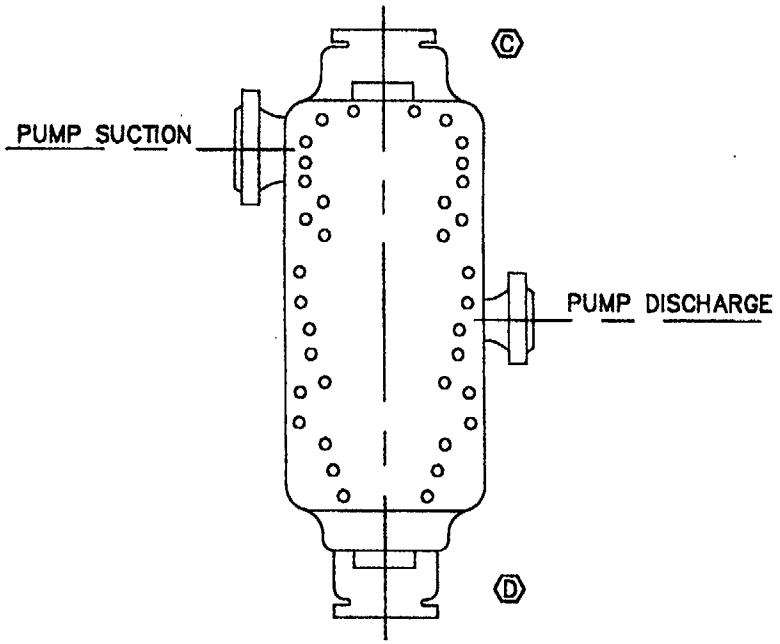

LOOKING DOWN

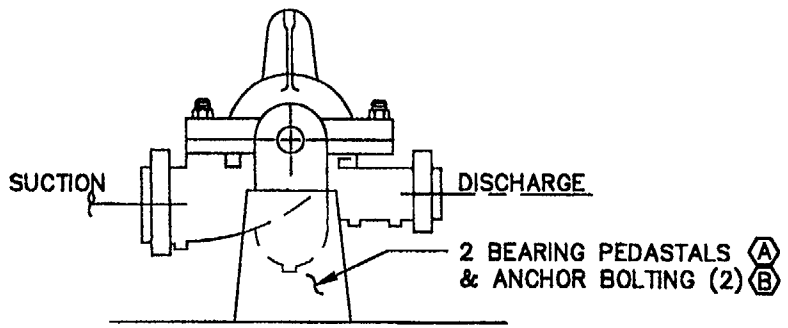

VIEW FROM PUMP END

REACTOR CORE INJECTION COOLANT (RCIC) PUMP
RCIC ROOM EL. 896'-0"

REF:	FILE NO:
NSP (M&SP)– MONTICELLO	ISI
DWN: TJH CHKD: DSW APPD: DSW	
SYSTEM: RCIC PUMP	
LINE:	
DWG: ISI-47	REV: 03

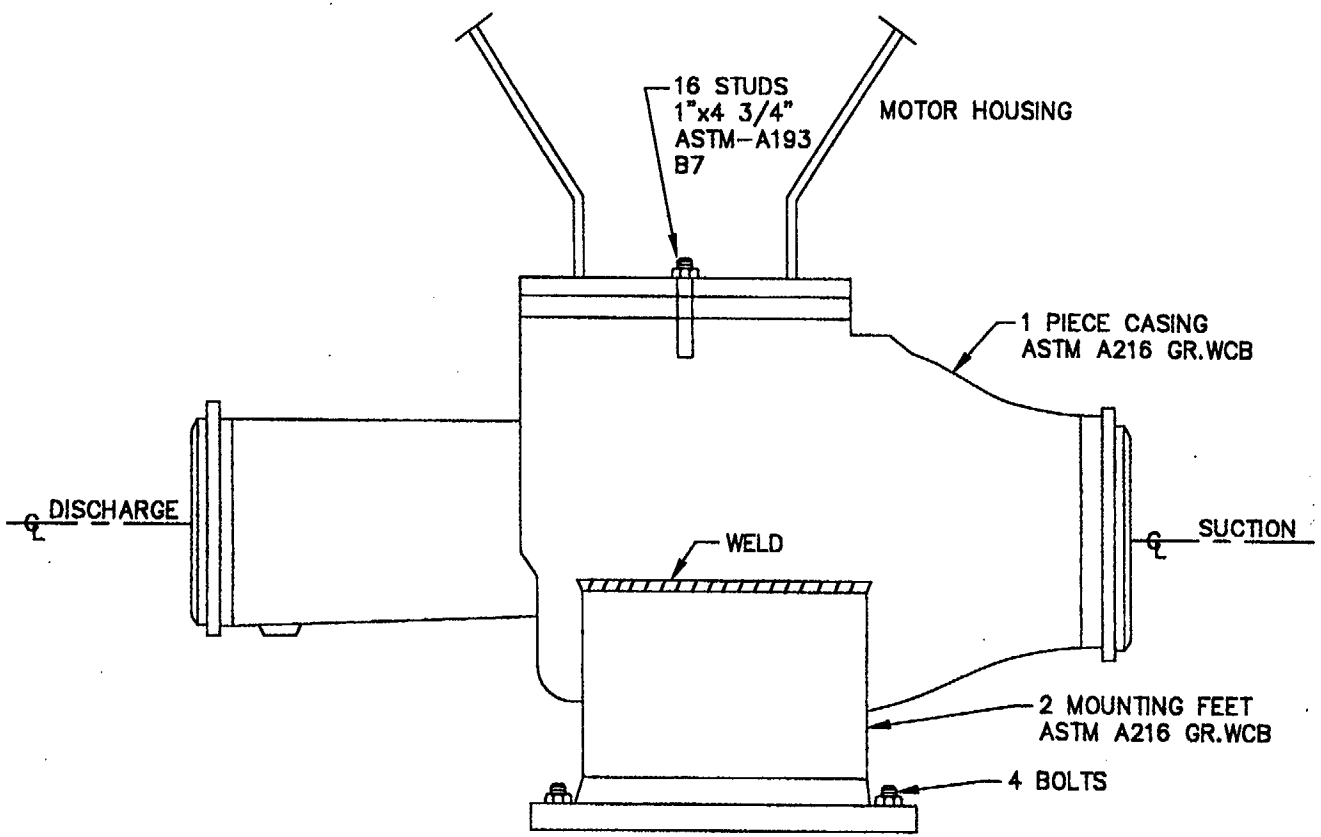

SIDE VIEW

REF: NX-7905-18	FILE NO:
NSP (M&SP)- MONTICELLO	ISI
DWN: TJH CHKD: DAW APPD: DAW	
SYSTEM: RHR PUMPS	
LINE:	
DWG: ISI-48	REV: 03

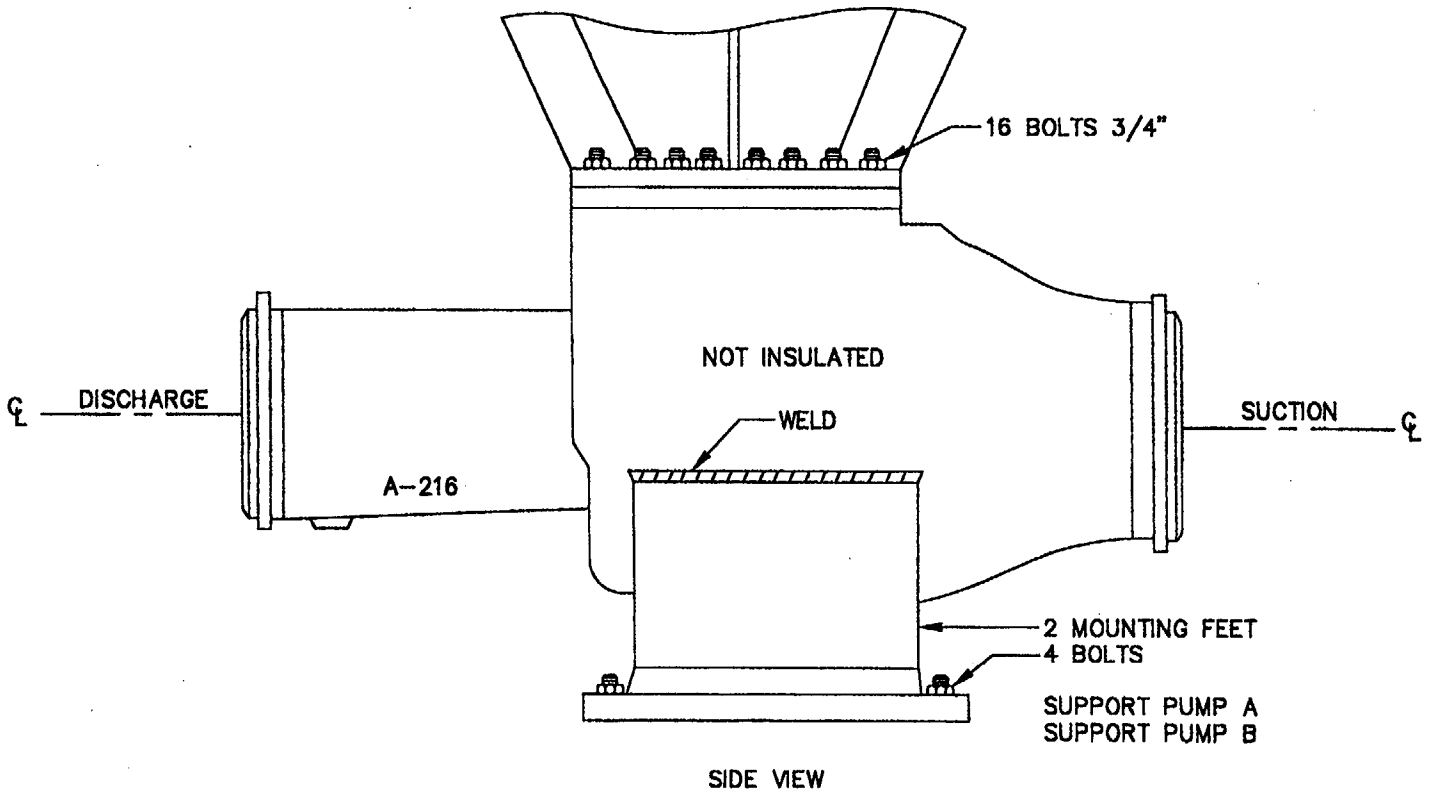

CORE SPRAY PUMPS EL. 896'-0"

PUMP "A" IS LOCATED IN THE RHR A ROOM & CONNECTS WITH NOZZLE N-5B
PUMP "B" IS LOCATED IN THE RHR B ROOM & CONNECTS WITH NOZZLE N-5A

REF: NX-7833-33		FILE NO:
NSP (M&SP)- MONTICELLO		ISI
DWN: TJH	CHKD: OSW	APPD: OSW
SYSTEM: CORE SPRAY PUMP SUPPORTS		
LINE:		
DWG:	ISI-49	REV: 03

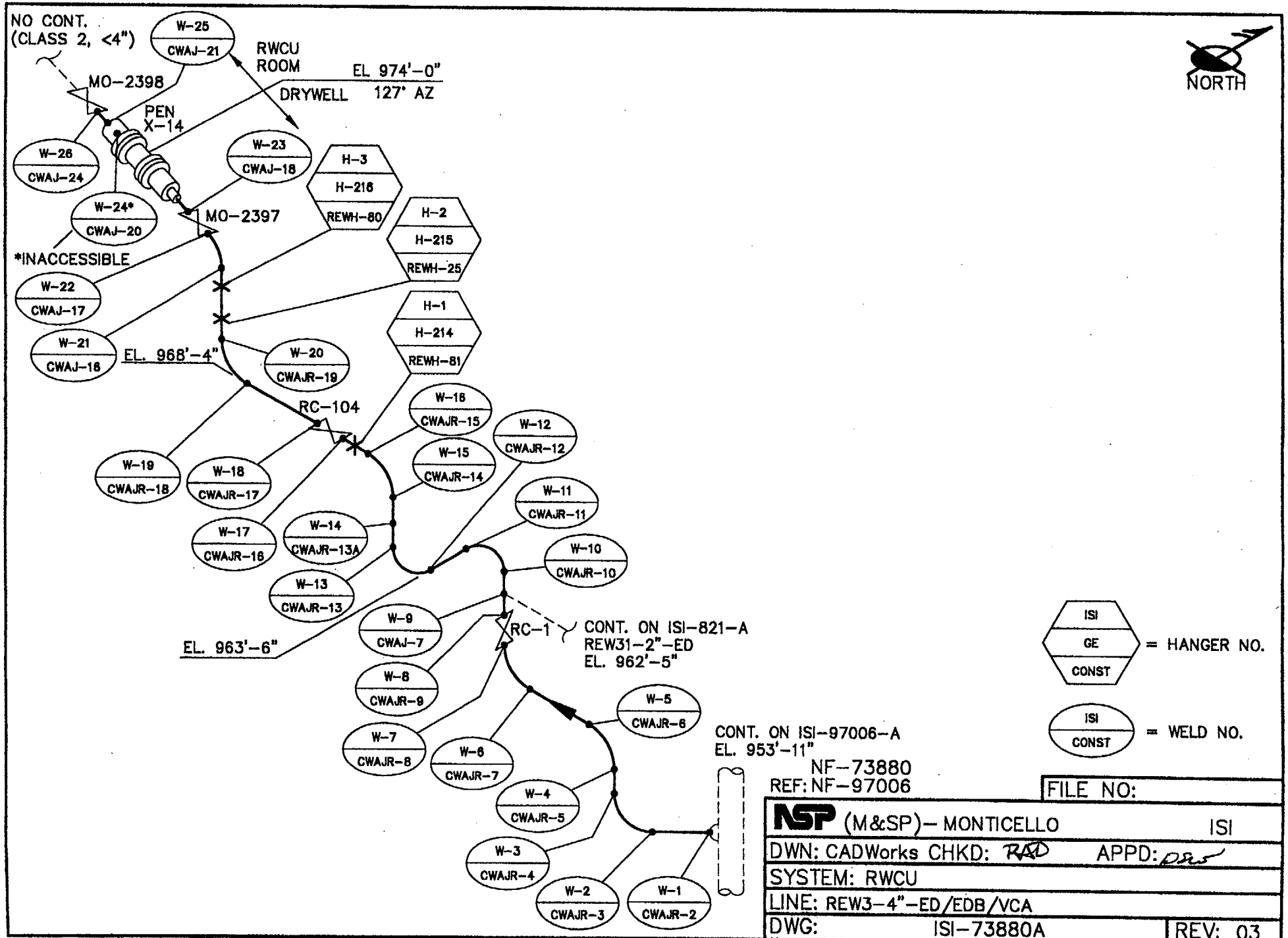
NO CONT.
(CLASS 2, <4")
W-25
CWAJ-21
RWCU
ROOM
EL 974'-0"
DRYWELL
127° AZ
MO-2398
PEN
X-14
W-26
CWAJ-24
W-23
CWAJ-18
H-3
H-216
REWH-80
W-24*
CWAJ-20
MO-2397
H-2
H-215
REWH-25
*INACCESSIBLE
W-22
CWAJ-17
H-1
H-214
REWH-81
W-21
CWAJ-16
EL. 968'-4"
W-20
CWAJR-19
RC-104
W-16
CWAJR-15
W-12
CWAJR-12
W-19
CWAJR-18
W-18
CWAJR-17
W-15
CWAJR-14
W-11
CWAJR-11
W-17
CWAJR-16
W-14
CWAJR-13A
W-10
CWAJR-10
W-13
CWAJR-13
EL. 963'-6"
W-9
CWAJ-7
RC-1
CONT. ON ISI-821-A
REW31-2"-ED
EL. 962'-5"
W-8
CWAJR-9
W-5
CWAJR-6
W-7
CWAJR-8
W-6
CWAJR-7
CONT. ON ISI-97006-A
EL. 953'-11"
W-4
CWAJR-5
W-3
CWAJR-4
W-2
CWAJR-3
W-1
CWAJR-2
NORTH
ISI
GE
CONST
= HANGER NO.
ISI
CONST
= WELD NO.
NF-73880
REF: NF-97006
FILE NO:
NSP (M&SP)- MONTICELLO
ISI
DWN: CADWorks CHKD: RAD APPD: DRS
SYSTEM: RWCU
LINE: REW3-4"-ED/EDB/VCA
DWG: ISI-73880A
REV: 03

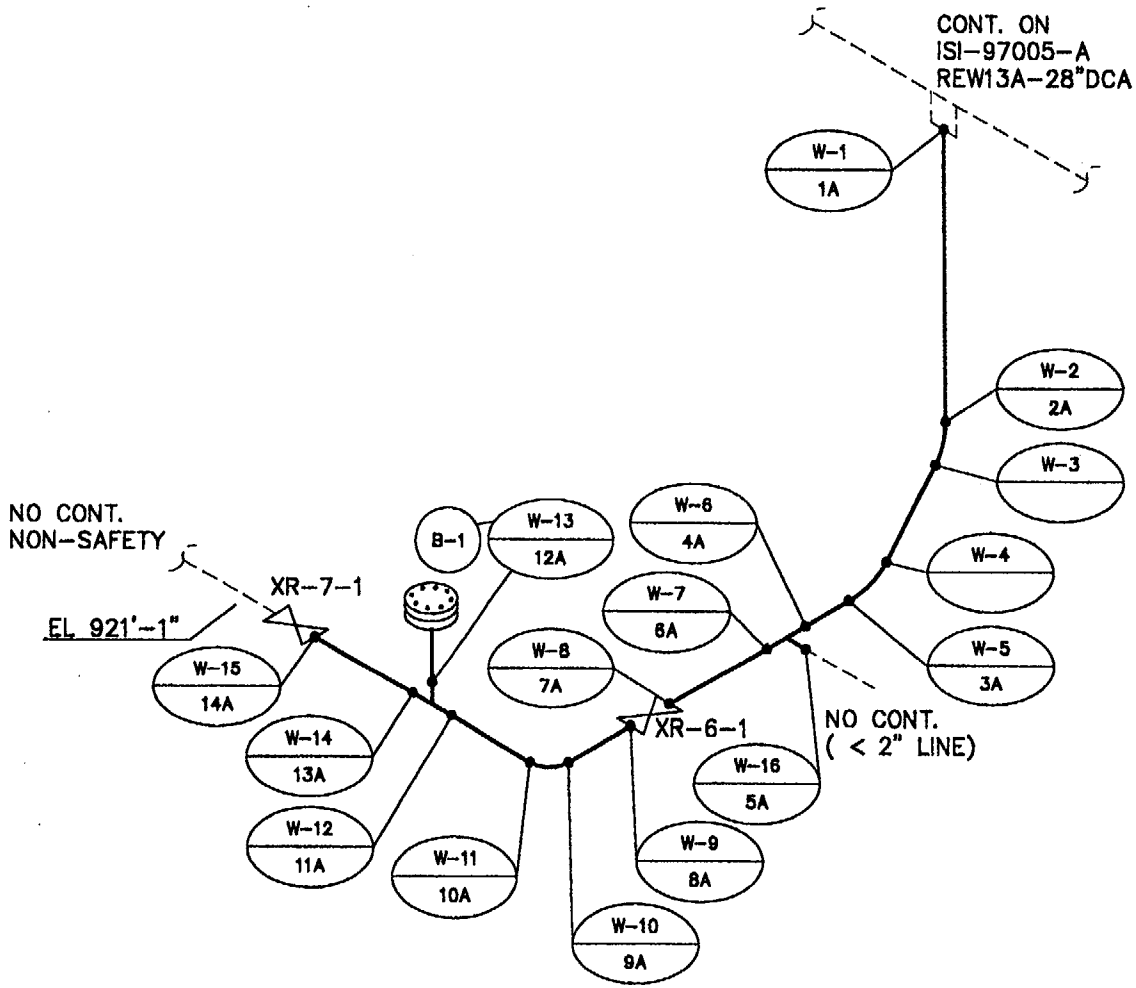

NOTE: LOCATED IN DRYWELL BLOW RECIRC PUMP P-200A SUCTION LINE

REF: NQ-74209-1

FILE NO:

NSP (M&SP)- MONTICELLO ISI

DWN: TJH CHKD: RAD APPD: BEW

SYSTEM: RECIRC. "A" DRAIN

LINE: REW28-2"-ECB

DWG: ISI-74209-1A REV: 03

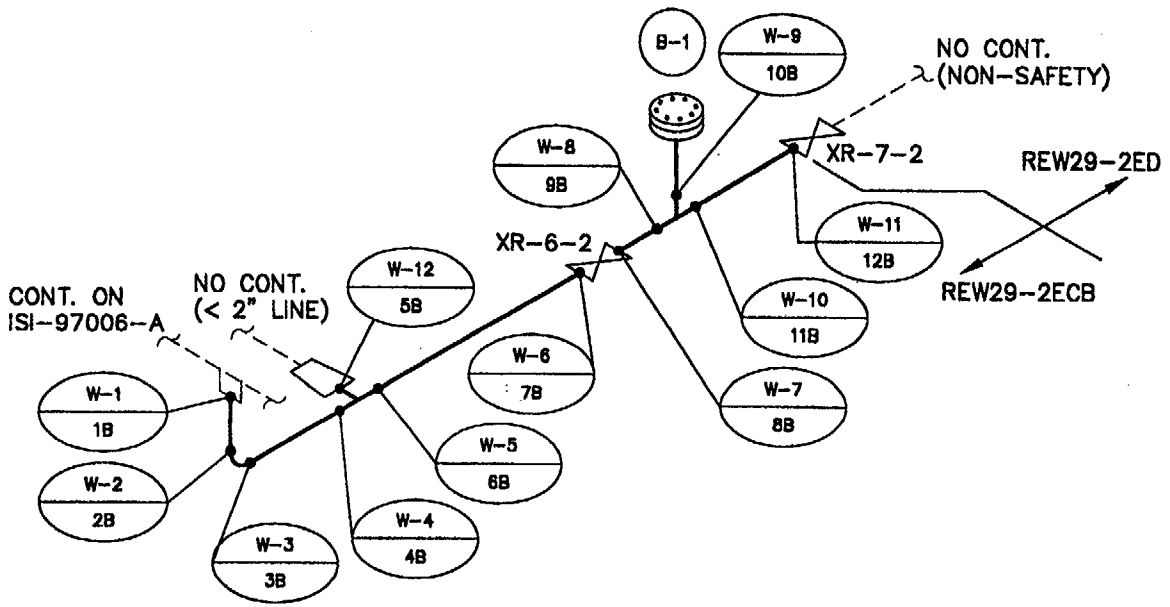

ISI / CONST. = WELD NO.

ISI = BOLT NO.

NOTE: LOCATED IN DRYWELL BLOW RECIRC PUMP P-200B SUCTION LINE

REF: NQ-74210-1

FILE NO:

NSP (M&SP)– MONTICELLO ISI

DWN: TJH CHKD: RAD APPD:

SYSTEM: RECIRC. "B" DRAIN

LINE: REW29-2"-ECB/ED

DWG: ISI-74210-1A REV: 03

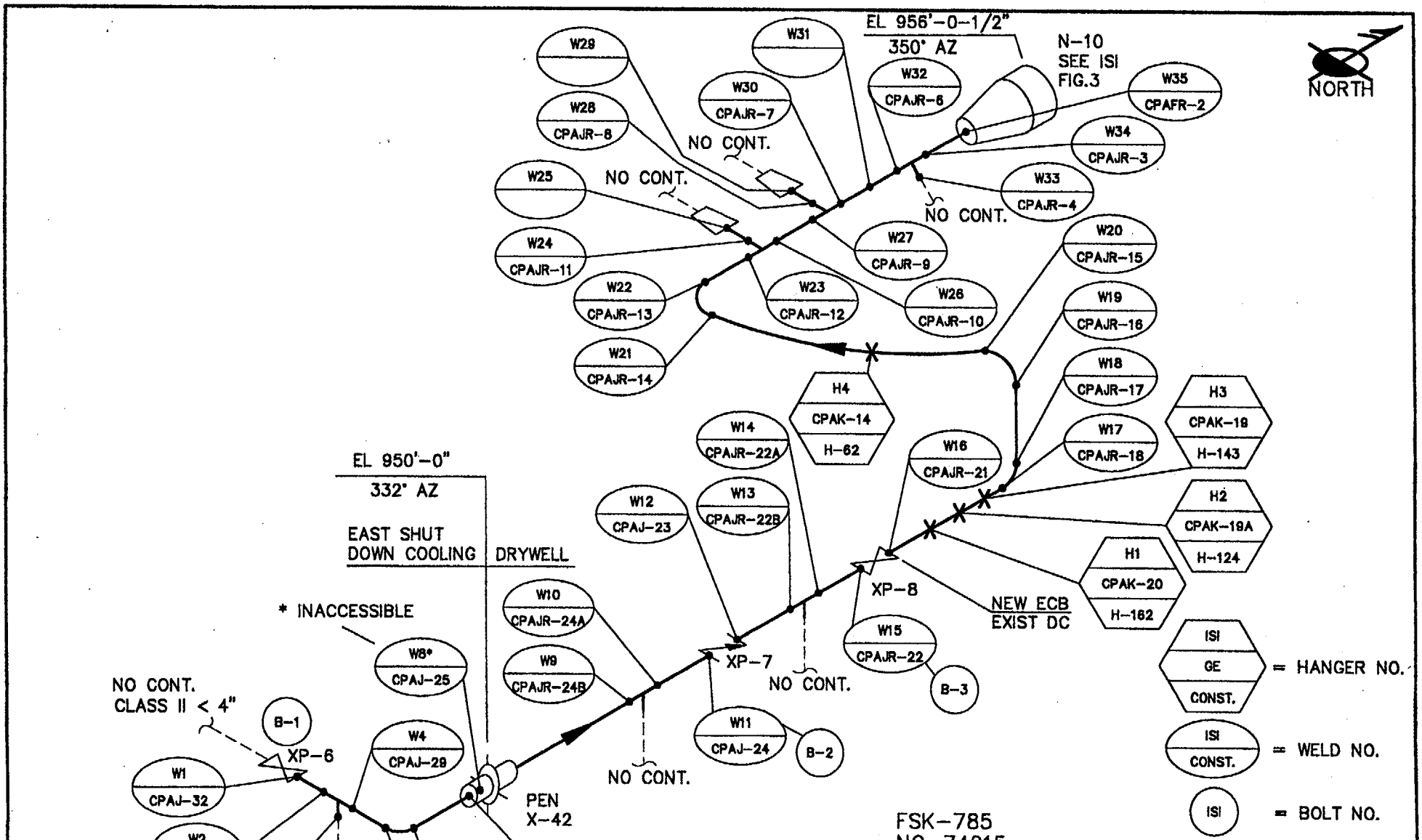

FSK-785
NQ-74215
REF: NX-7831-523

FILE NO:

NSP (M&SP)- MONTICELLO	ISI
DWN: TJH CHKD: RAD APPD: GW	
SYSTEM: STANDBY LIQUID CONTROL	
LINE: CH2-1.5"	
DWG: ISI-74215A	REV: 03

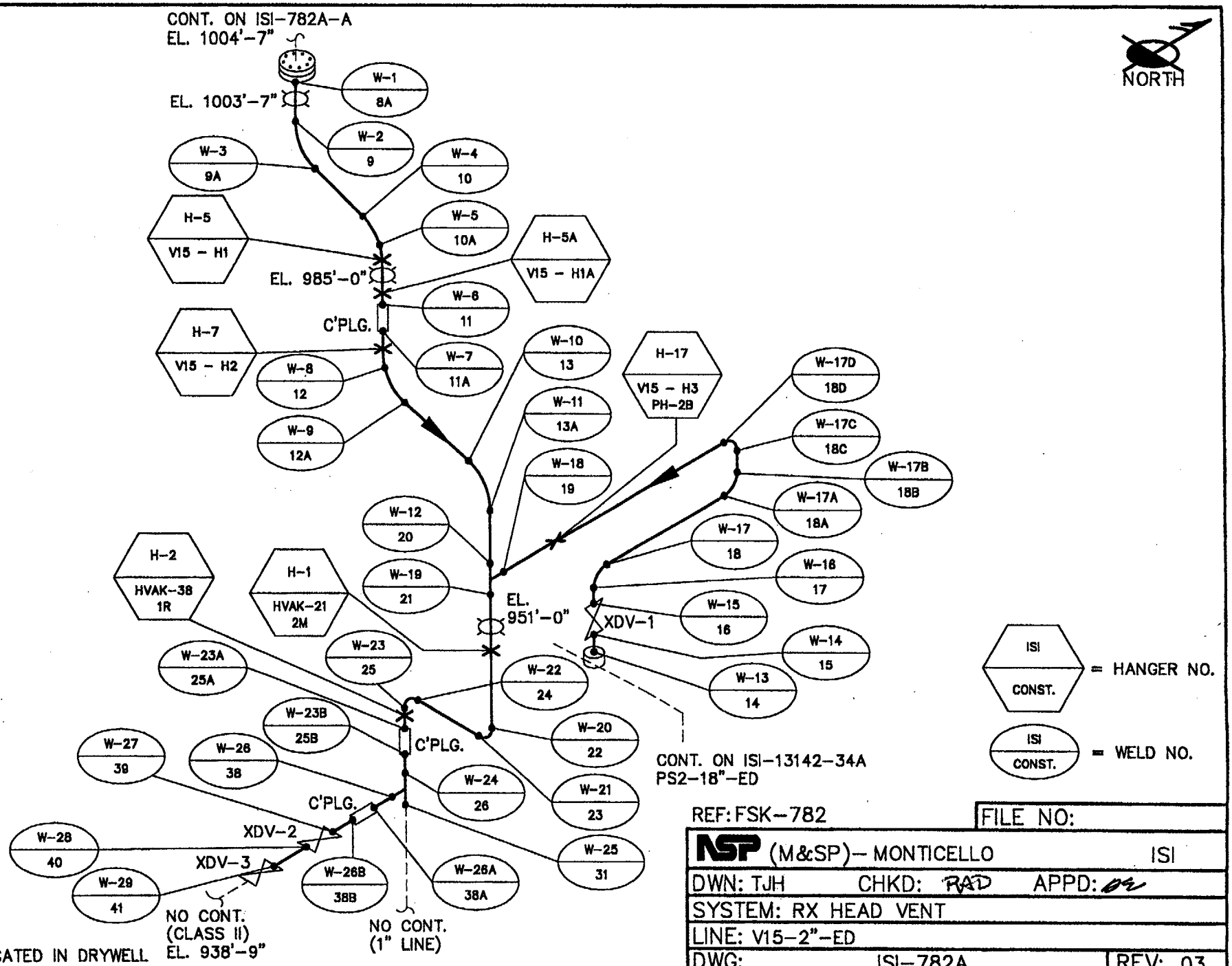
CONT. ON ISI-782A-A
EL. 1004'-7"
EL. 1003'-7"
W-1 8A
W-2 9
W-3 9A
W-4 10
W-5 10A
H-5 V15 - H1
H-5A V15 - H1A
EL. 985'-0"
W-6 11
C'PLG.
H-7 V15 - H2
W-8 12
W-7 11A
W-9 12A
W-10 13
W-11 13A
W-18 19
H-17 V15 - H3 PH-2B
W-17D 18D
W-17C 18C
W-17B 18B
W-17A 18A
W-17 18
W-16 17
W-15 16
W-14 15
W-13 14
XDV-1
EL. 951'-0"
W-12 20
W-19 21
H-2 HVAK-38 1R
H-1 HVAK-21 2M
W-23A 25A
W-23 25
W-22 24
W-23B 25B
C'PLG.
W-20 22
W-27 39
W-26 38
W-24 26
W-21 23
C'PLG.
XDV-2
W-28 40
XDV-3
W-25 31
W-26B 38B
W-26A 38A
W-29 41
NO CONT. (CLASS II) EL. 938'-9"
NO CONT. (1" LINE)
CONT. ON ISI-13142-34A PS2-18"-ED
NORTH
ISI CONST. = HANGER NO.
ISI CONST. = WELD NO.
NOTE: LOCATED IN DRYWELL
REF: FSK-782
FILE NO:
NSP (M&SP)- MONTICELLO ISI
DWN: TJH CHKD: RAD APPD: DE
SYSTEM: RX HEAD VENT
LINE: V15-2"-ED
DWG: ISI-782A REV: 03

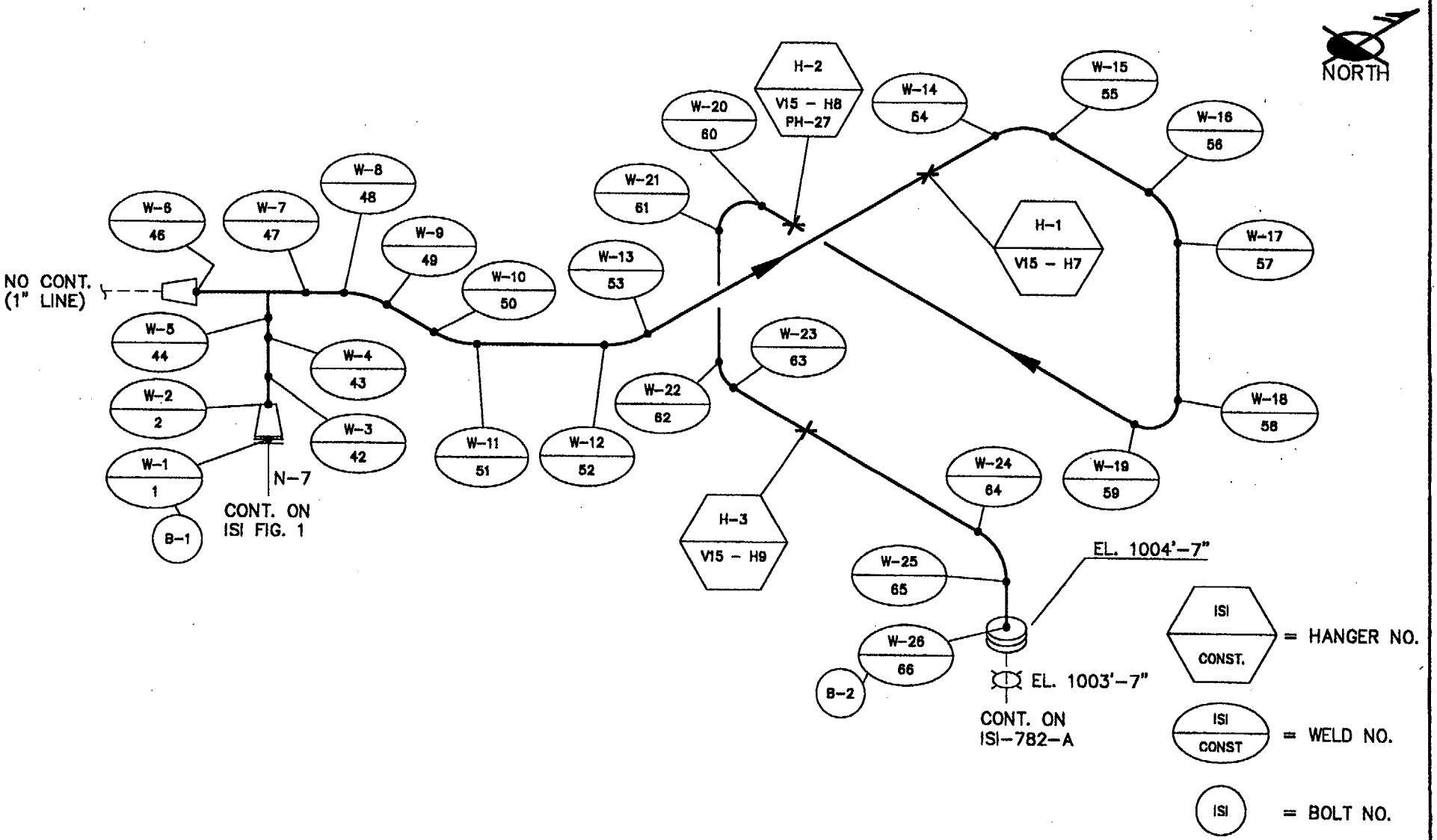

NOTE: LOCATED ON REFUEL FLOOR DRING REFULING OUTAGE

REF: FSK-782A	FILE NO: 312AAR03
NSP (M&SP)-- MONTICELLO	ISI
DWN: CADWorks CHKD: RAD	APPD: BA
SYSTEM: RX HEAD VENT	
LINE: V15-2"-ED	
DWG: ISI-782A-A	REV: 03

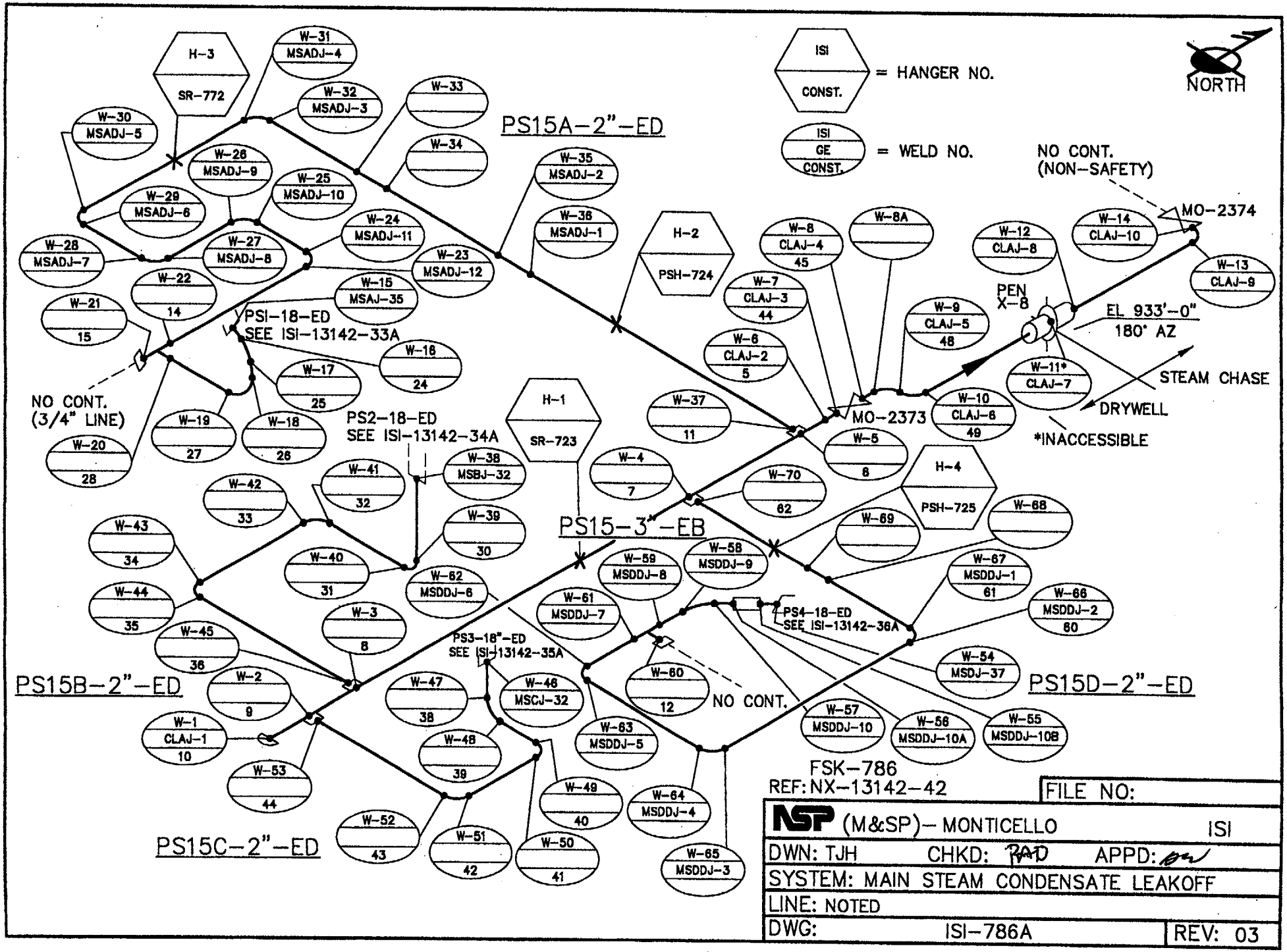

FSK-786
REF: NX-13142-42

FILE NO:	
NSP (M&SP)- MONTICELLO	ISI
DWN: TJH CHKD: TJD APPD:	
SYSTEM: MAIN STEAM CONDENSATE LEAKOFF	
LINE: NOTED	
DWG: ISI-786A	REV: 03

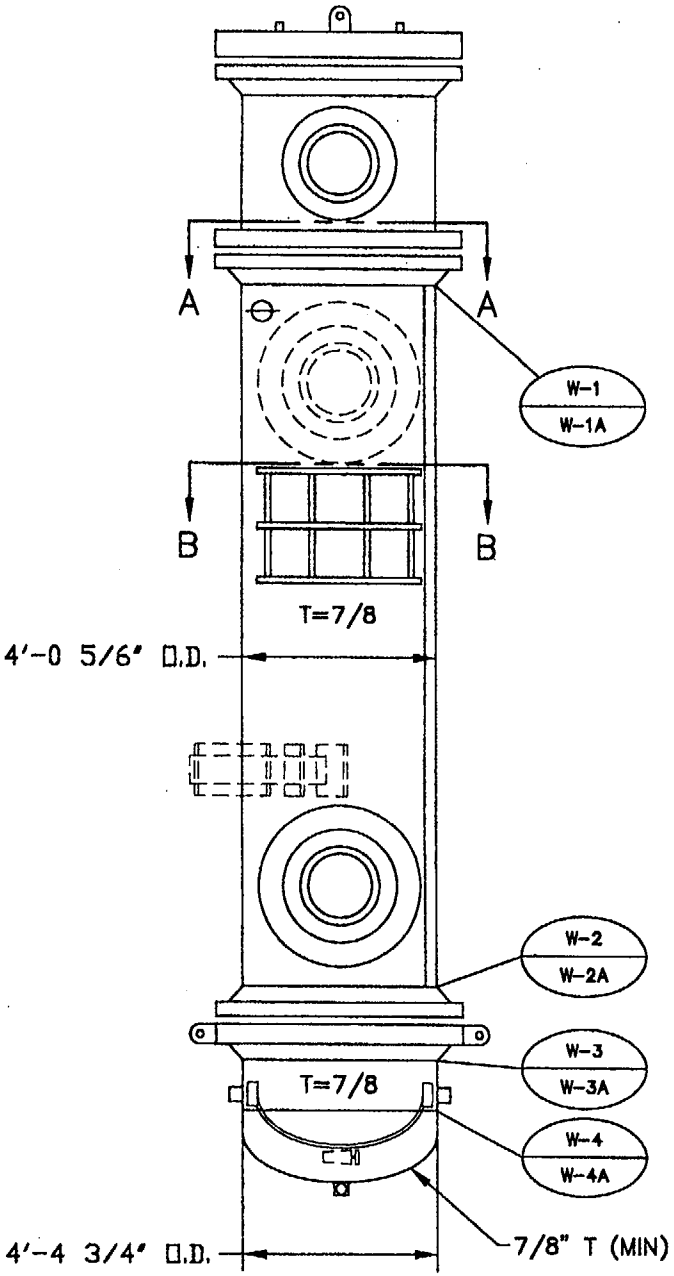

RHR HEAT EXCHANGER E200A

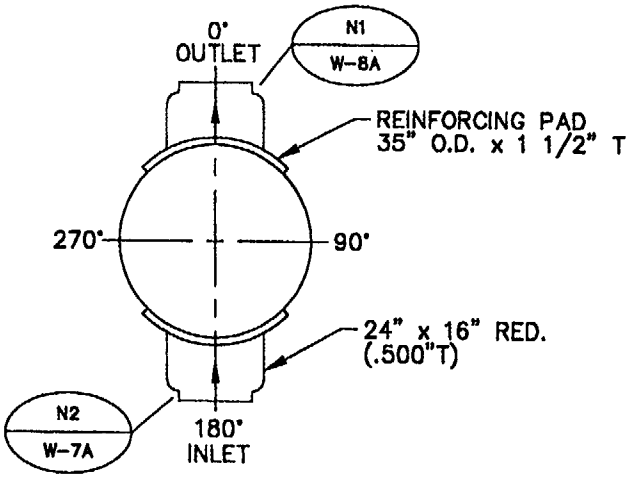

SECTION A–A

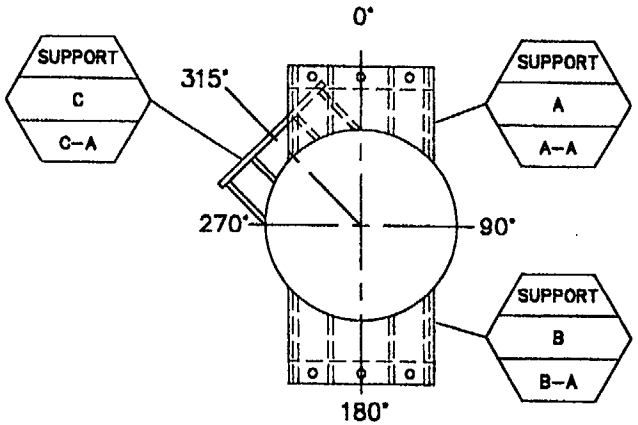

SECTION B–B

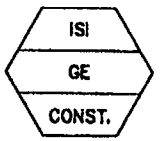

= HANGER NO.

= WELD NO.

REF: NX-7905-32

FILE NO:

NSP (M&SP)– MONTICELLO ISI

DWN: TJH CHKD: RAD APPD: BA

SYSTEM: RHR HX "A"

LINE:

DWG: ISI-7905-32A REV: 03

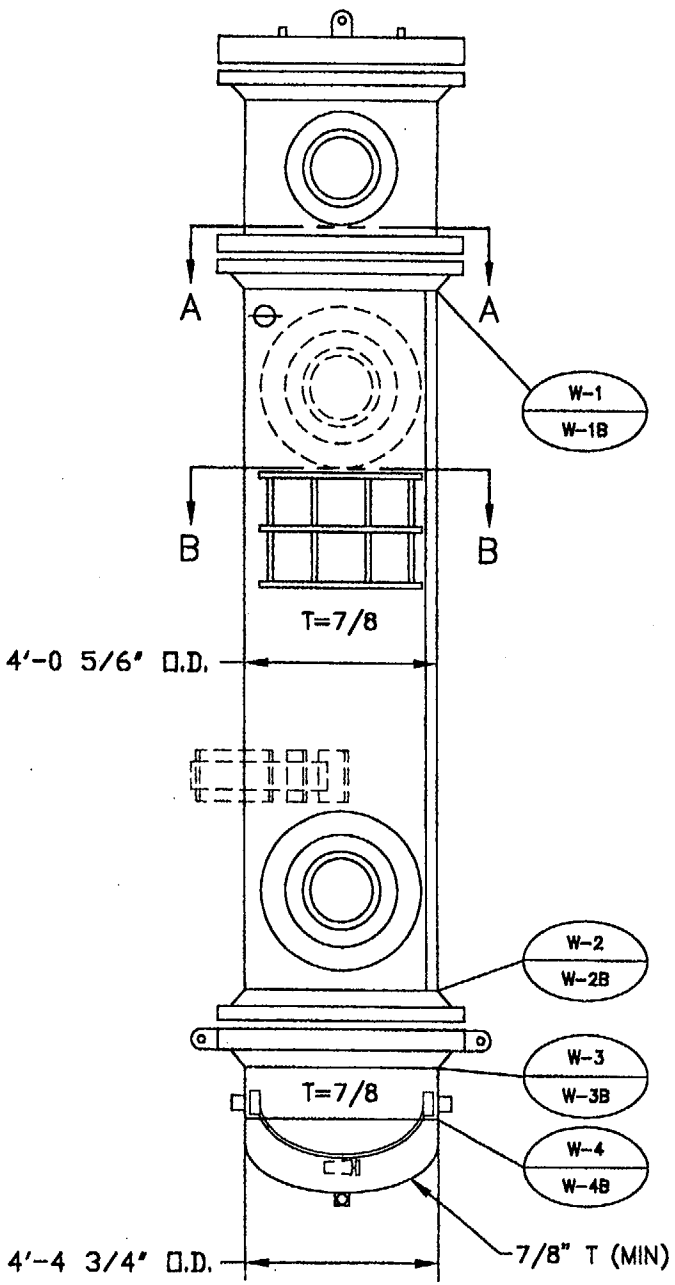

RHR HEAT EXCHANGER E200B

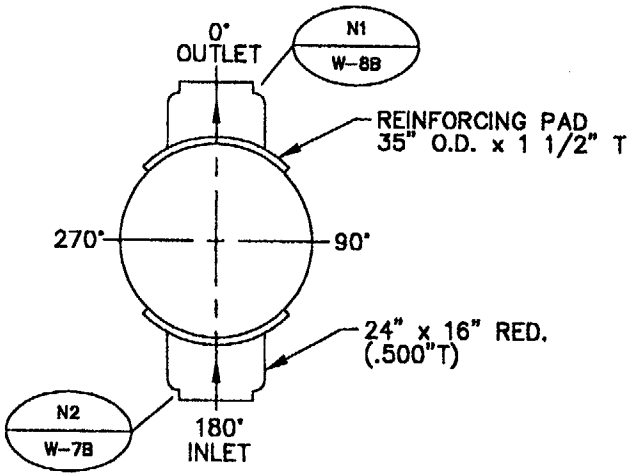

SECTION A–A

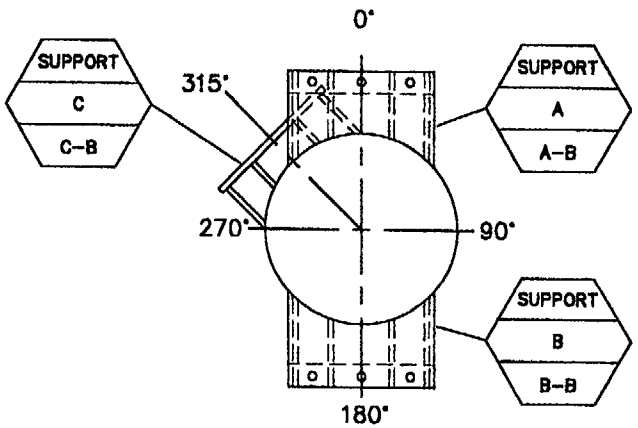

SECTION B–B

ISI / GE / CONST. = HANGER NO.

ISI / CONST. = WELD NO.

REF: NX-7905-32

FILE NO:

NSP (M&SP)– MONTICELLO ISI

DWN: TJH CHKD: RAO APPD:

SYSTEM: RHR HX "B"

LINE:

DWG: ISI-7905-32B REV: 03

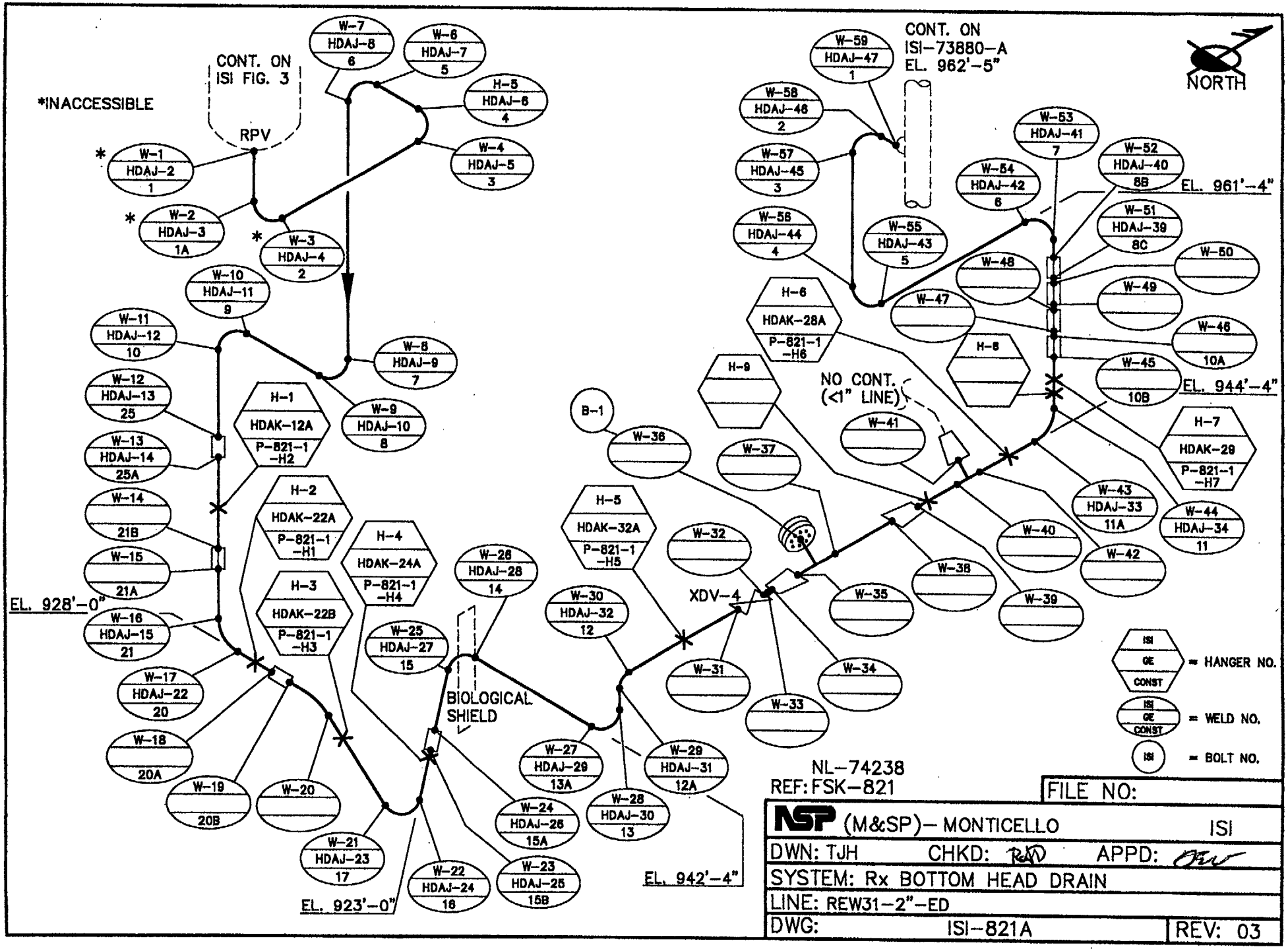
*INACCESSIBLE
CONT. ON ISI FIG. 3
RPV
CONT. ON ISI-73880-A EL. 962'-5"
NORTH
EL. 961'-4"
EL. 944'-4"
EL. 928'-0"
EL. 923'-0"
EL. 942'-4"
NO CONT. (<1" LINE)
BIOLOGICAL SHIELD
XDV-4
W-1 HDAJ-2 1
W-2 HDAJ-3 1A
W-3 HDAJ-4 2
W-4 HDAJ-5 3
H-5 HDAJ-6 4
W-6 HDAJ-7 5
W-7 HDAJ-8 6
W-8 HDAJ-9 7
W-9 HDAJ-10 8
W-10 HDAJ-11 9
W-11 HDAJ-12 10
W-12 HDAJ-13 25
W-13 HDAJ-14 25A
W-14 21B
W-15 21A
W-16 HDAJ-15 21
W-17 HDAJ-22 20
W-18 20A
W-19 20B
W-20
W-21 HDAJ-23 17
W-22 HDAJ-24 16
W-23 HDAJ-25 15B
W-24 HDAJ-26 15A
W-25 HDAJ-27 15
W-26 HDAJ-28 14
W-27 HDAJ-29 13A
W-28 HDAJ-30 13
W-29 HDAJ-31 12A
W-30 HDAJ-32 12
W-31
W-32
W-33
W-34
W-35
W-36
W-37
W-38
W-39
W-40
W-41
W-42
W-43 HDAJ-33 11A
W-44 HDAJ-34 11
W-45 10B
W-46 10A
W-47
W-48
W-49
W-50
W-51 HDAJ-39 8C
W-52 HDAJ-40 8B
W-53 HDAJ-41 7
W-54 HDAJ-42 6
W-55 HDAJ-43 5
W-56 HDAJ-44 4
W-57 HDAJ-45 3
W-58 HDAJ-46 2
W-59 HDAJ-47 1
H-1 HDAK-12A P-821-1 -H2
H-2 HDAK-22A P-821-1 -H1
H-3 HDAK-22B P-821-1 -H3
H-4 HDAK-24A P-821-1 -H4
H-5 HDAK-32A P-821-1 -H5
H-6 HDAK-28A P-821-1 -H6
H-7 HDAK-29 P-821-1 -H7
H-8
H-9
B-1
ISI GE CONST = HANGER NO.
ISI GE CONST = WELD NO.
ISI = BOLT NO.
NL-74238
REF: FSK-821
FILE NO:
NSP (M&SP)- MONTICELLO ISI
DWN: TJH CHKD: APPD:
SYSTEM: Rx BOTTOM HEAD DRAIN
LINE: REW31-2"-ED
DWG: ISI-821A
REV: 03

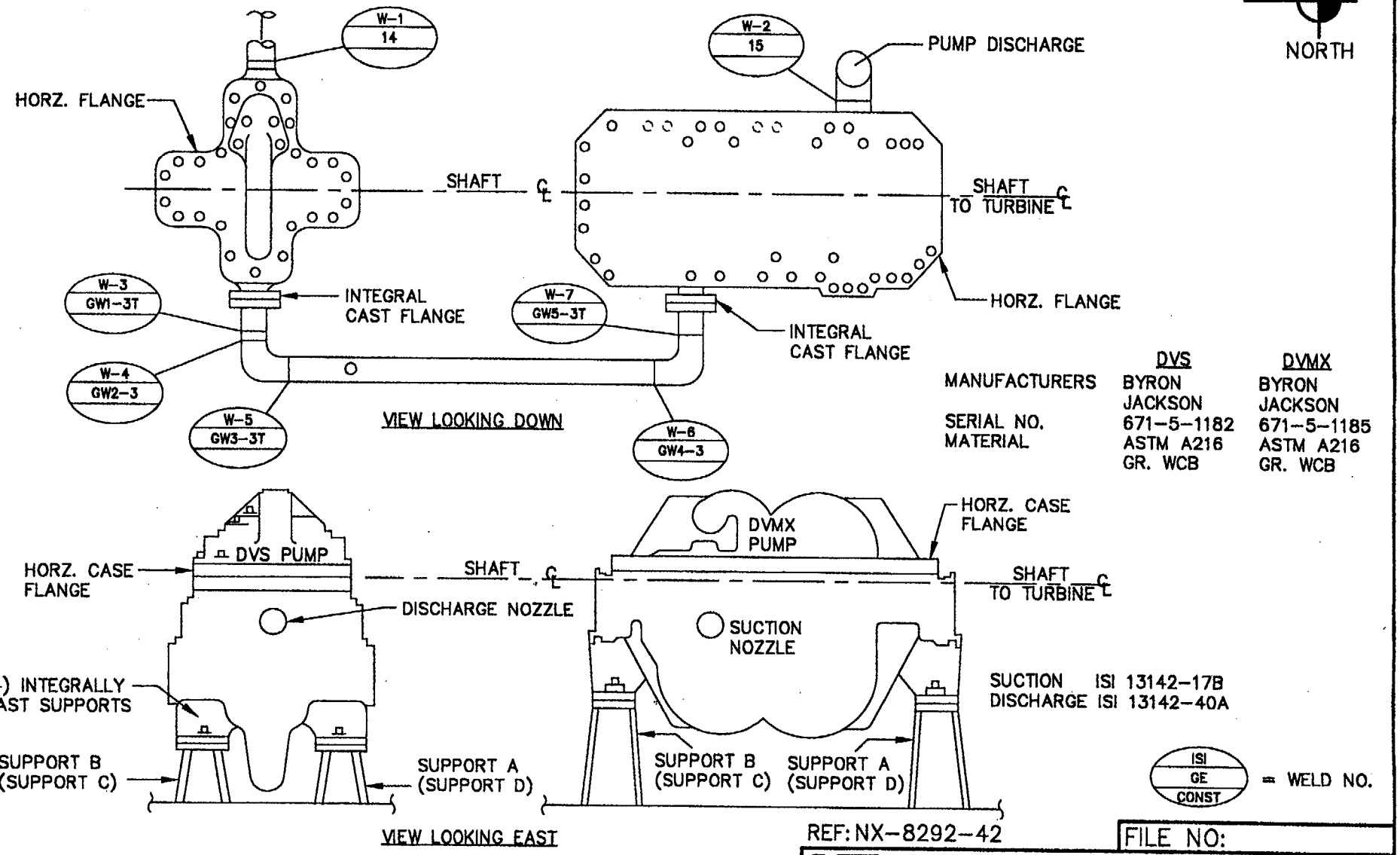

HPCI PUMP ROOM
EL. 896'-0"

HIGH PRESSURE COOLANT INJECTION (HPCI) PUMPS

REF: NX-8292-42

FILE NO:	
NSP (M&SP) – MONTICELLO	ISI
DWN: TJH	CHKD: RAD APPD:
SYSTEM: HPCI PUMPS	
LINE:	
DWG: ISI 8292-42A	REV: 03

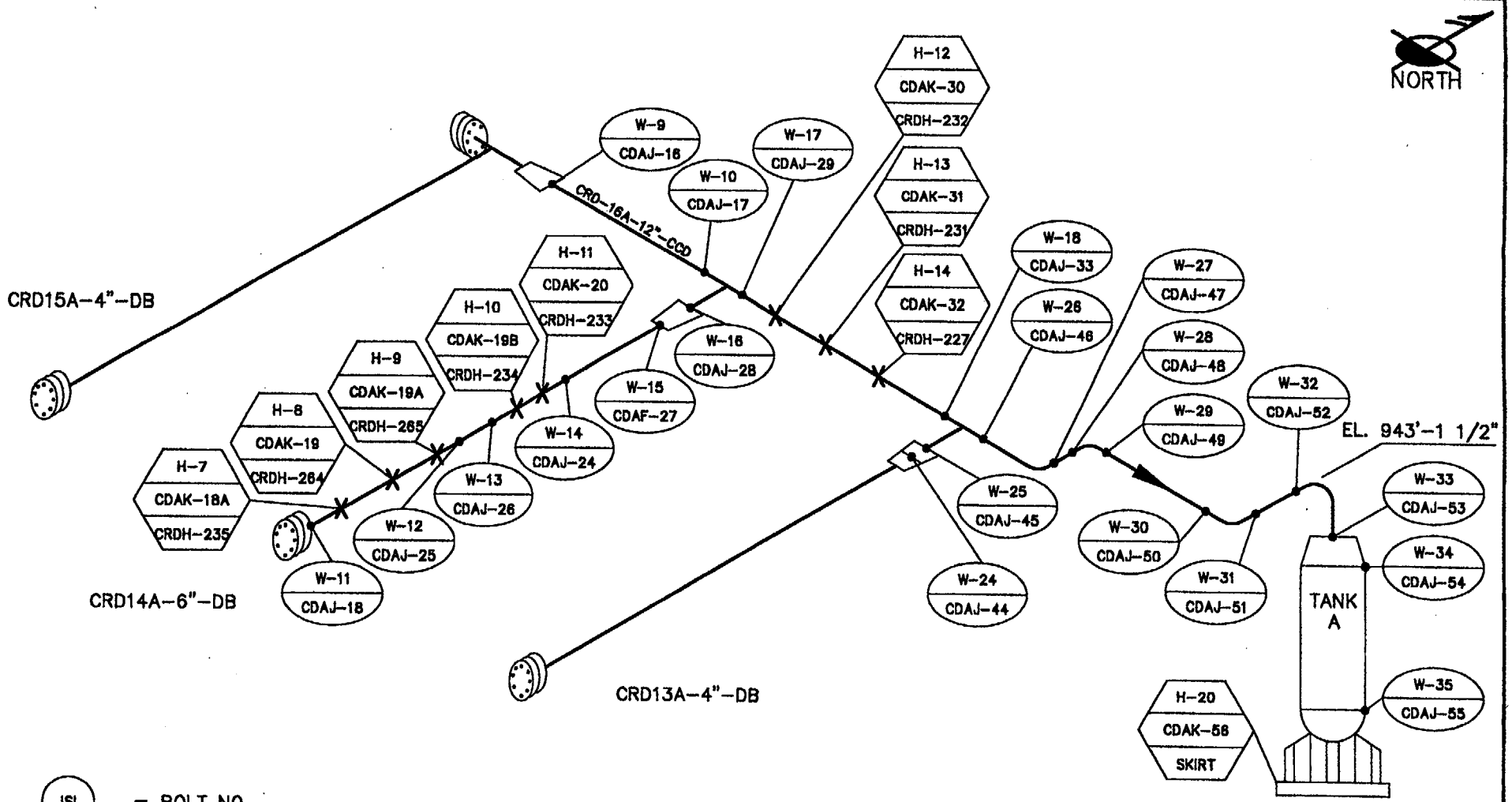

ISI = BOLT NO.

ISI / GE / CONST. = HANGER NO.

ISI / CONST = WELD NO.

NOTE: LOCATED ON WEST SIDE OF Rx BLDG AT 935' ELEVATION

NF–93268–1
NF–93268–4
REF: NX–13142–77

FILE NO:

NSP (M&SP)– MONTICELLO ISI

DWN: TJH CHKD: RJD APPD:

SYSTEM: CRD SCRAM HEADER "A"

LINE: NOTED

DWG: ISI–93268–1A REV: 03

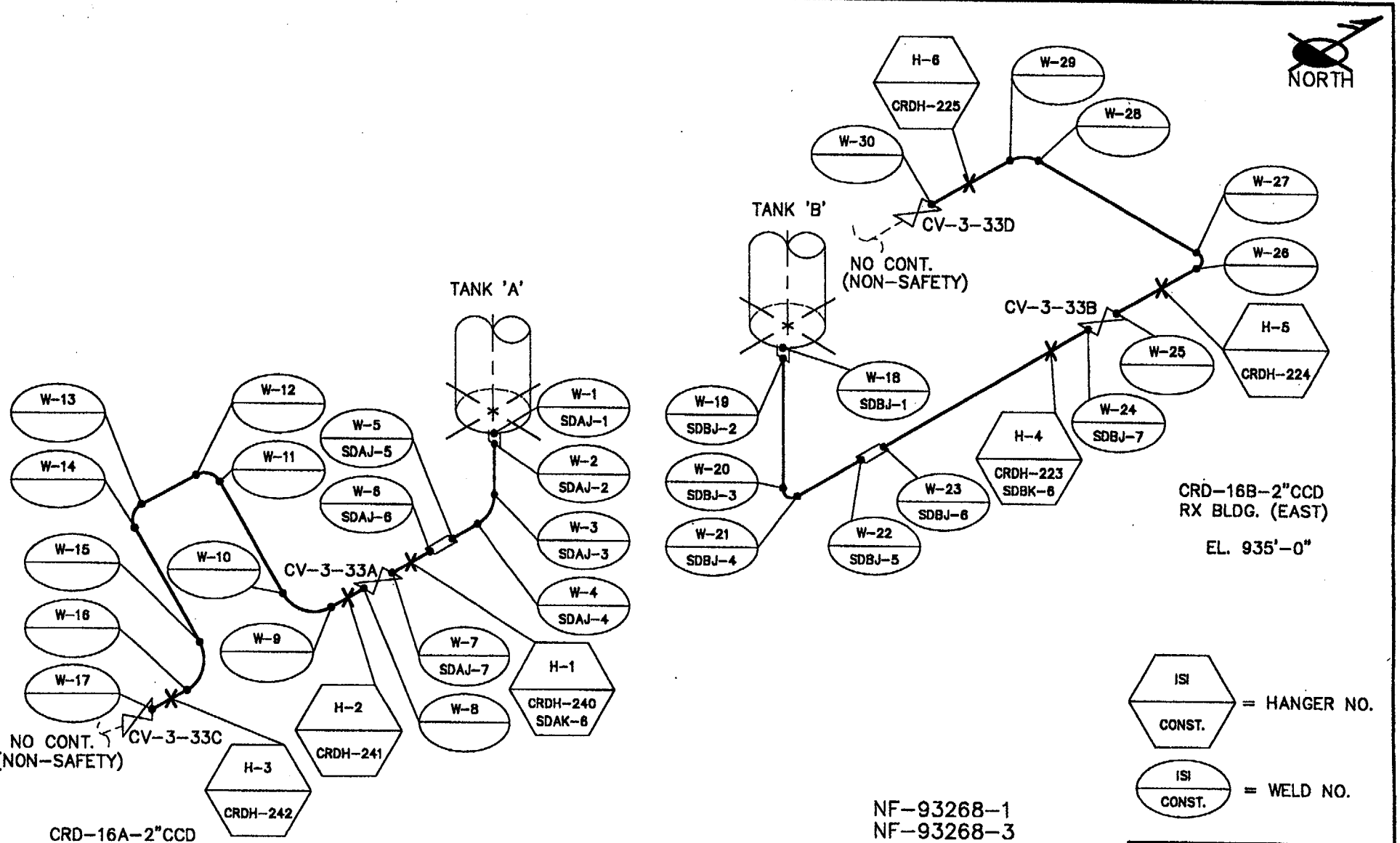

NF-93268-1
NF-93268-3
REF: NF-93268-4

FILE NO:	
NSP (M&SP)– MONTICELLO	ISI
DWN: TJH CHKD: RAD APPD: DA	
SYSTEM: CRD SCRAM HEADER DISCHARGE	
LINE: CRD-16A-2"CCD & CRD-16B-2"CCD	
DWG: ISI-93268-1B	REV: 03

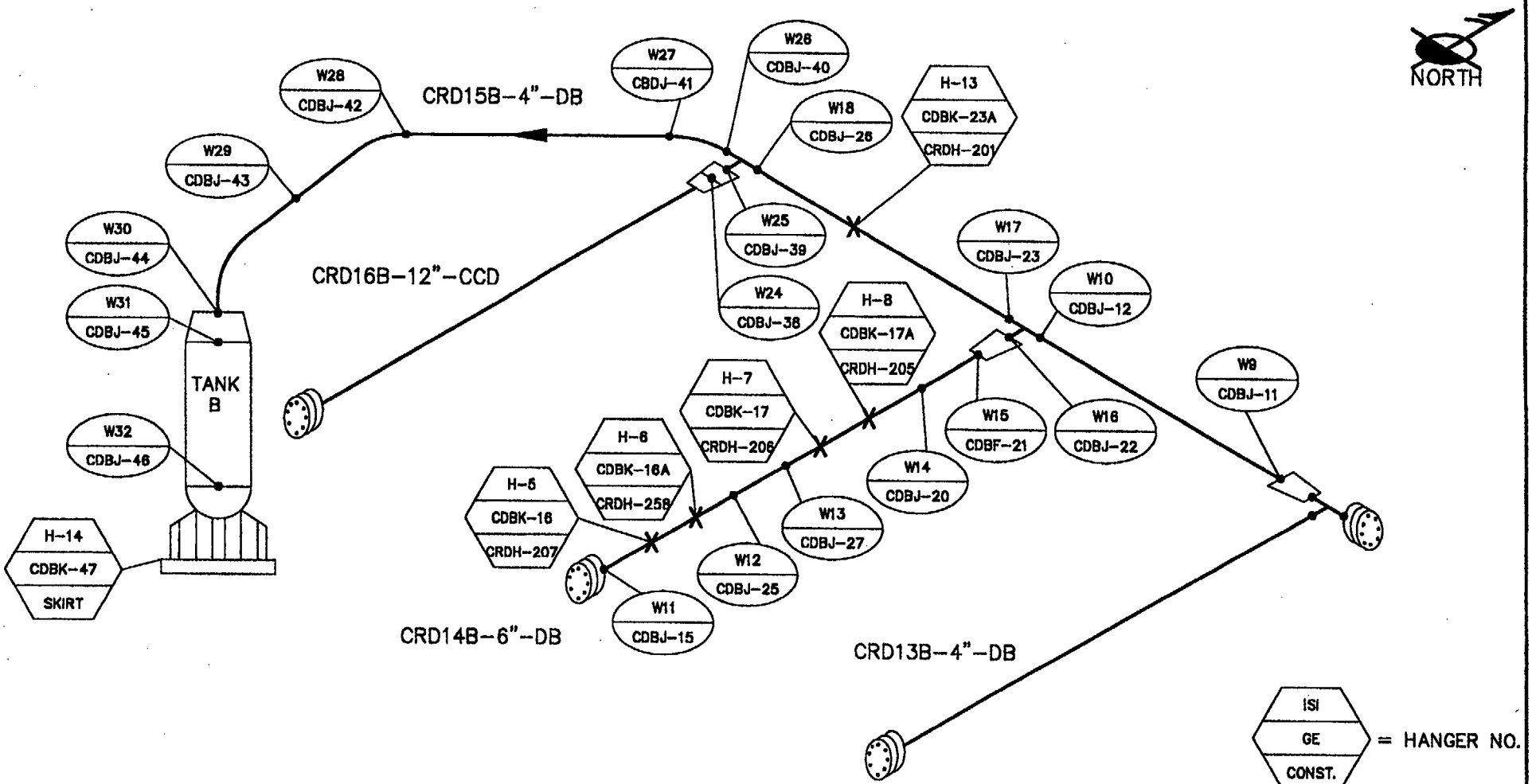

NF-93268-1
NF-93268-3
REF: NX-13142-77

FILE NO:

NSP (M&SP)– MONTICELLO ISI

DWN: TJH CHKD: RSD APPD: DA

SYSTEM: CRD SCRAM HEADER "B"

LINE: NOTED

DWG: ISI-93268-3A REV: 03

NOTE: LOCATED ON EAST SIDE OF Rx BLDG @ 935' ELEVATION

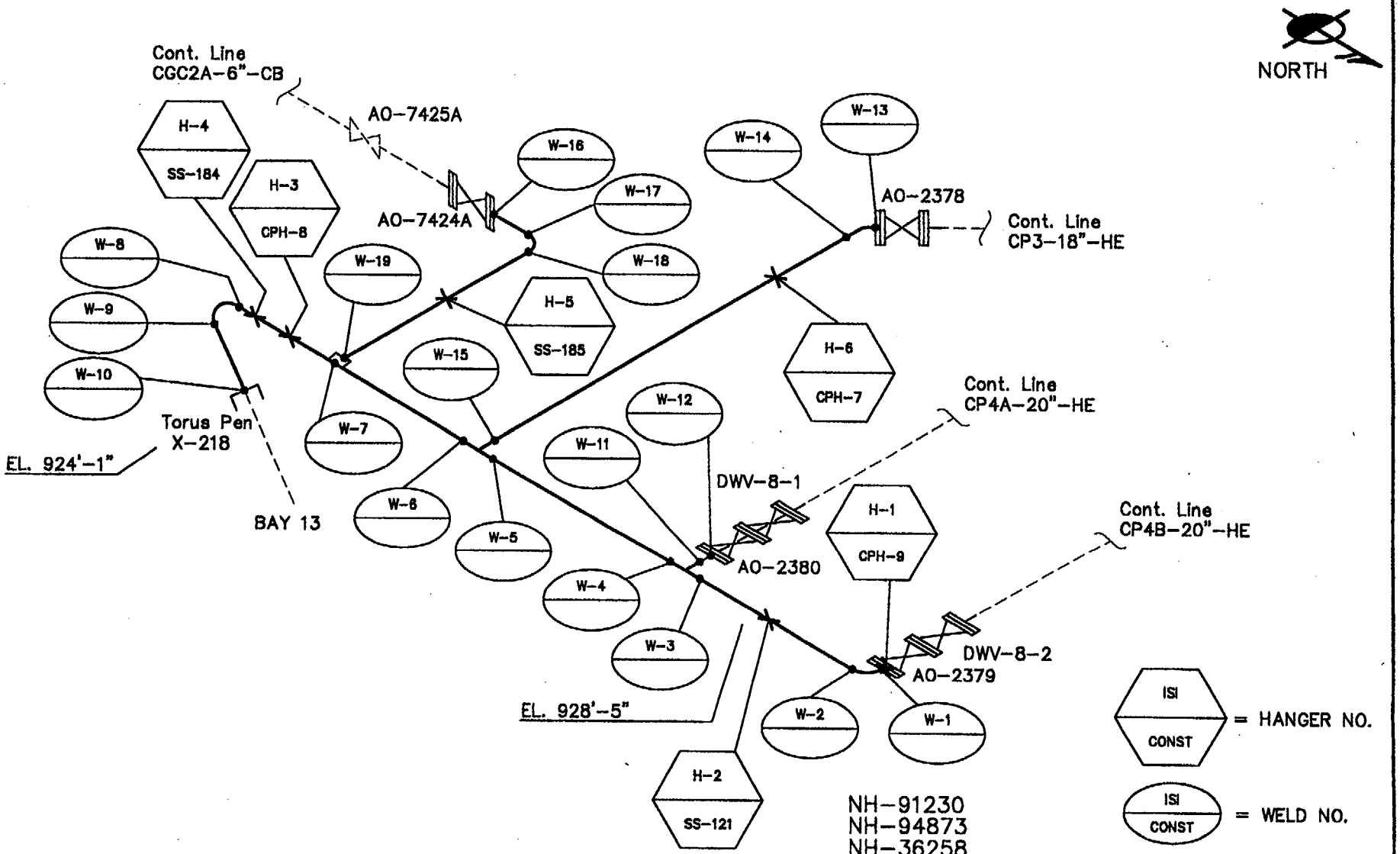

NH-91230
NH-94873
NH-36258
REF: NH-94966

FILE NO: 3166AR00

NSP (M&SP)– MONTICELLO	ISI
DWN: TJH CHKD:	APPD:
SYSTEM: VACUUM RELIEF & CGCS OUTLET DIV 1	
LINE: CP4–20"–HE ; CP3–18"–HE & CGC2A–6"–CB	
DWG: ISI–94966–A	REV: 0

NORTH

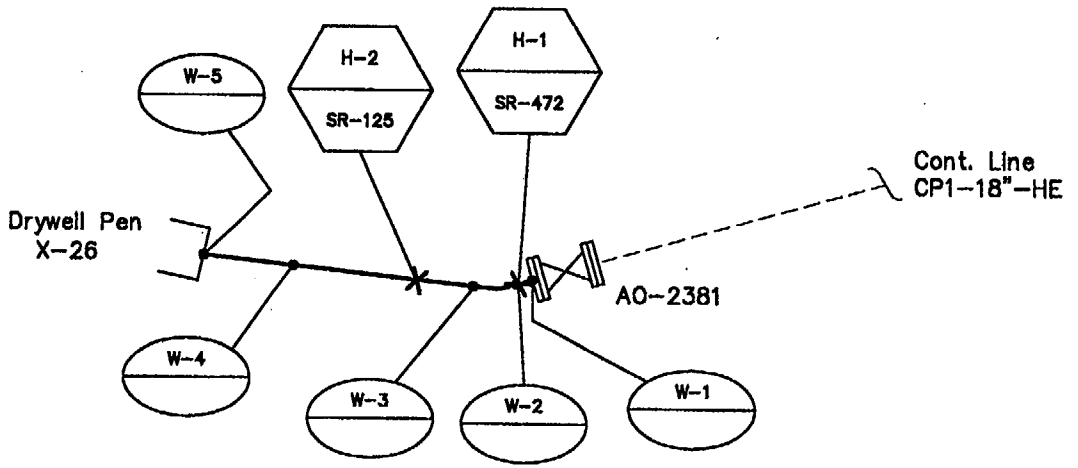

ISI / CONST = HANGER NO.

ISI / CONST = WELD NO.

NH-36258
REF: NH-94966

FILE NO: 3166BR00

NSP (M&SP)- MONTICELLO ISI

DWN: TJH CHKD: APPD:

SYSTEM: CONTAINMENT AIR PURGE

LINE: CP1-18"-HE

DWG: ISI-94966-B REV: 0

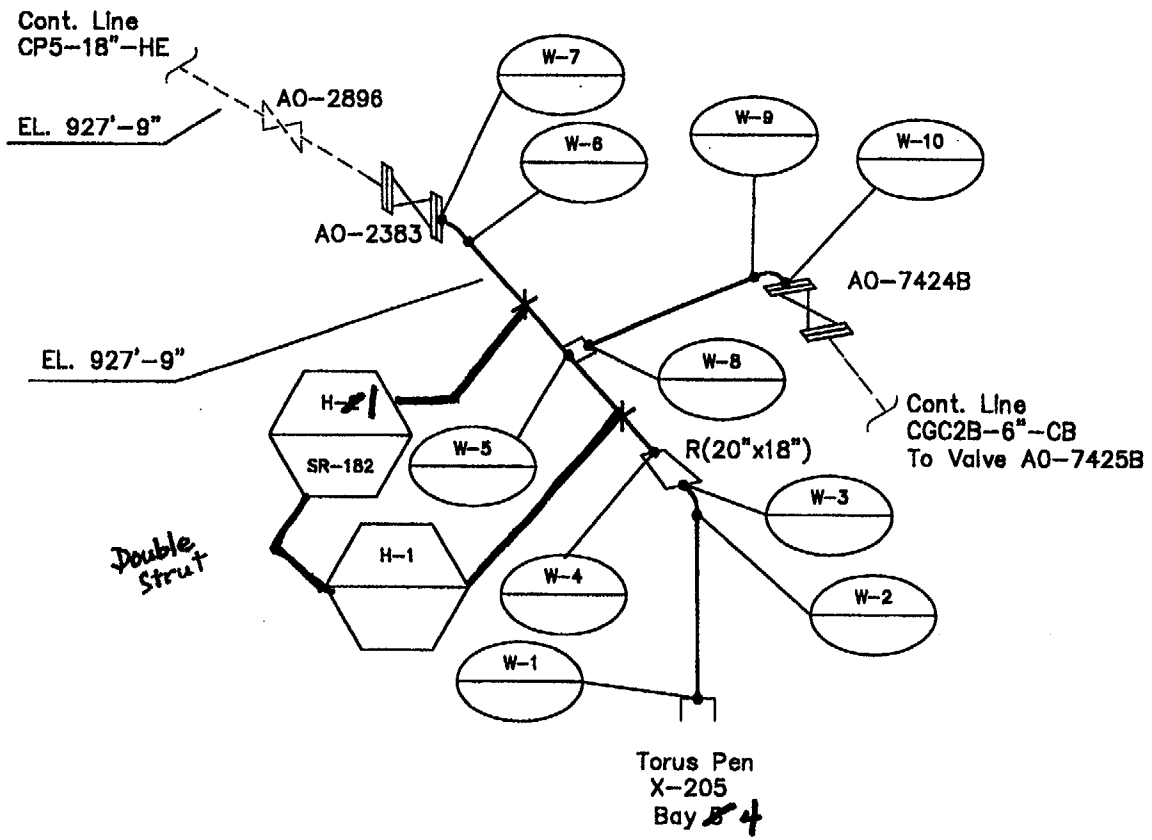

ISI / CONST = HANGER NO.

ISI / CONST = WELD NO.

NH-36258
NH-94878
REF: NH-94699

FILE NO: 3199AR00

NSP (M&SP)– MONTICELLO		ISI
DWN: TJH	CHKD:	APPD:
SYSTEM: COMBSTN GAS CNTRL OUTLET DIV 2		
LINE: CP5-18"-HE & CGC2B-6"-CB		
DWG: ISI-94699-A		REV: 0

COMBUSTION GAS CONTROL (CGC) OUTLET DIV II

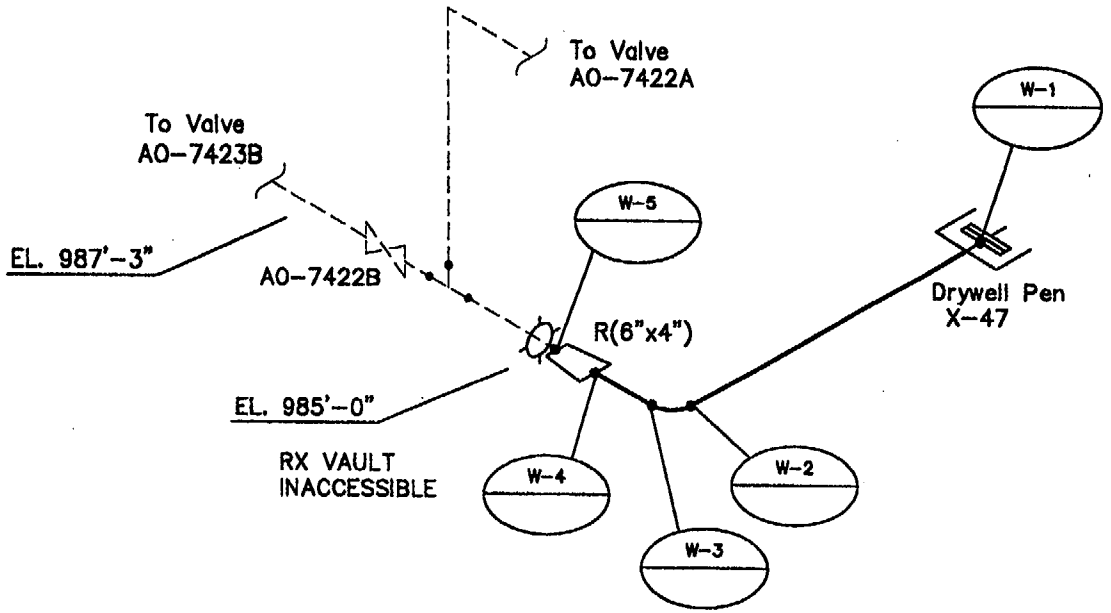

NOTE: 1" CLEARANCE FROM REDUCER-TO-WALL PEN.

NH-91230
NH-36258
REF: NH-94879

FILE NO: 3179AR00	
NSP (M&SP)- MONTICELLO	ISI
DWN: TJH CHKD: APPD:	
SYSTEM: COMBSTN GAS CNTRL INLET DIV 1&2	
LINE: CGC1-6"-CB	
DWG: ISI-94879-A	REV: 0

COMBUSTION GAS CONTROL (CGC) INLET DIV I & DIV II

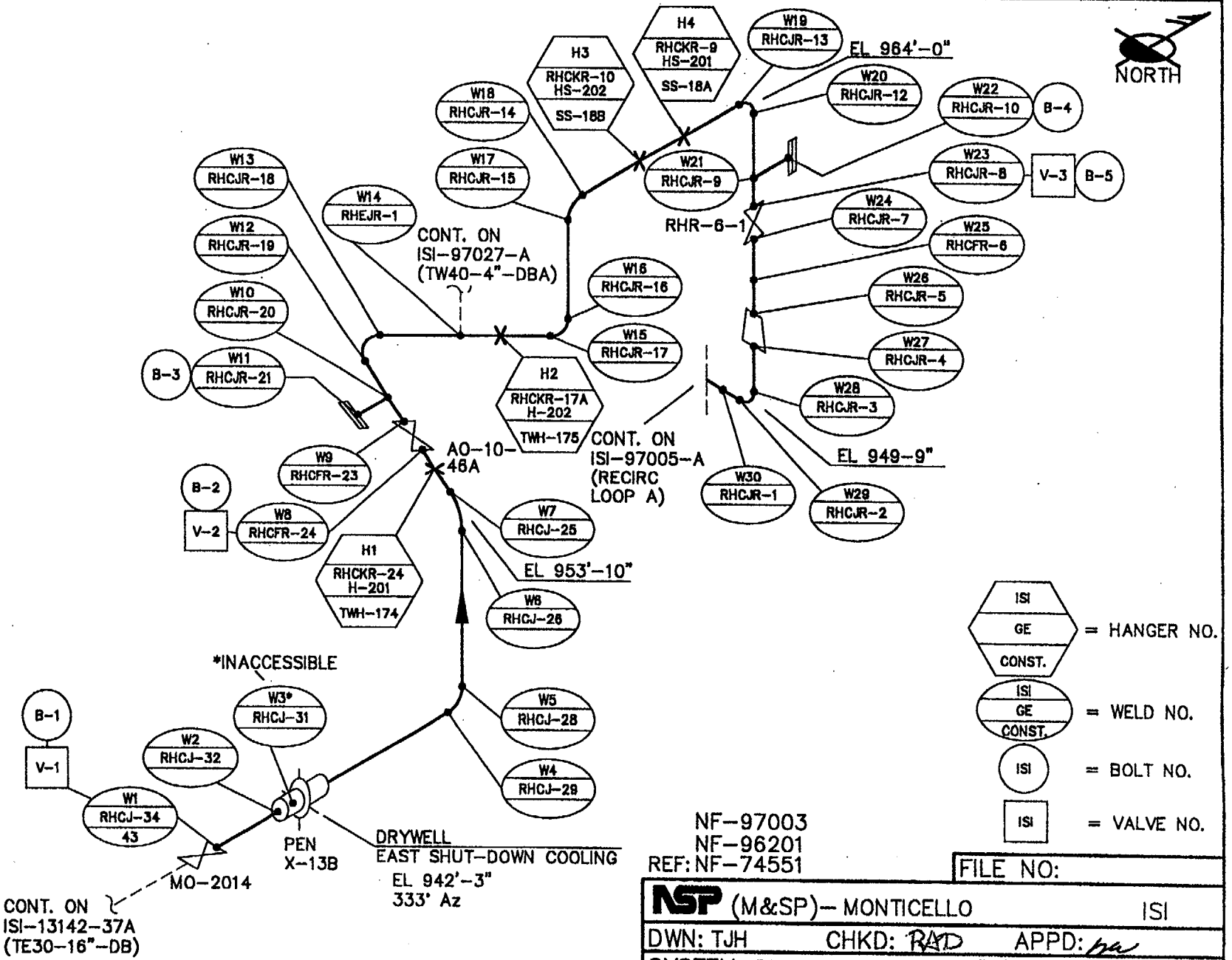

NF-97003
NF-96201
REF: NF-74551

FILE NO:

NSP (M&SP)-- MONTICELLO		ISI
DWN: TJH	CHKD: RAD	APPD: pa
SYSTEM: RHR RETURN LOOP "A"		
LINE: TW30"-16-DB & DLA & DCA		
DWG: ISI-97003-A		REV: 03

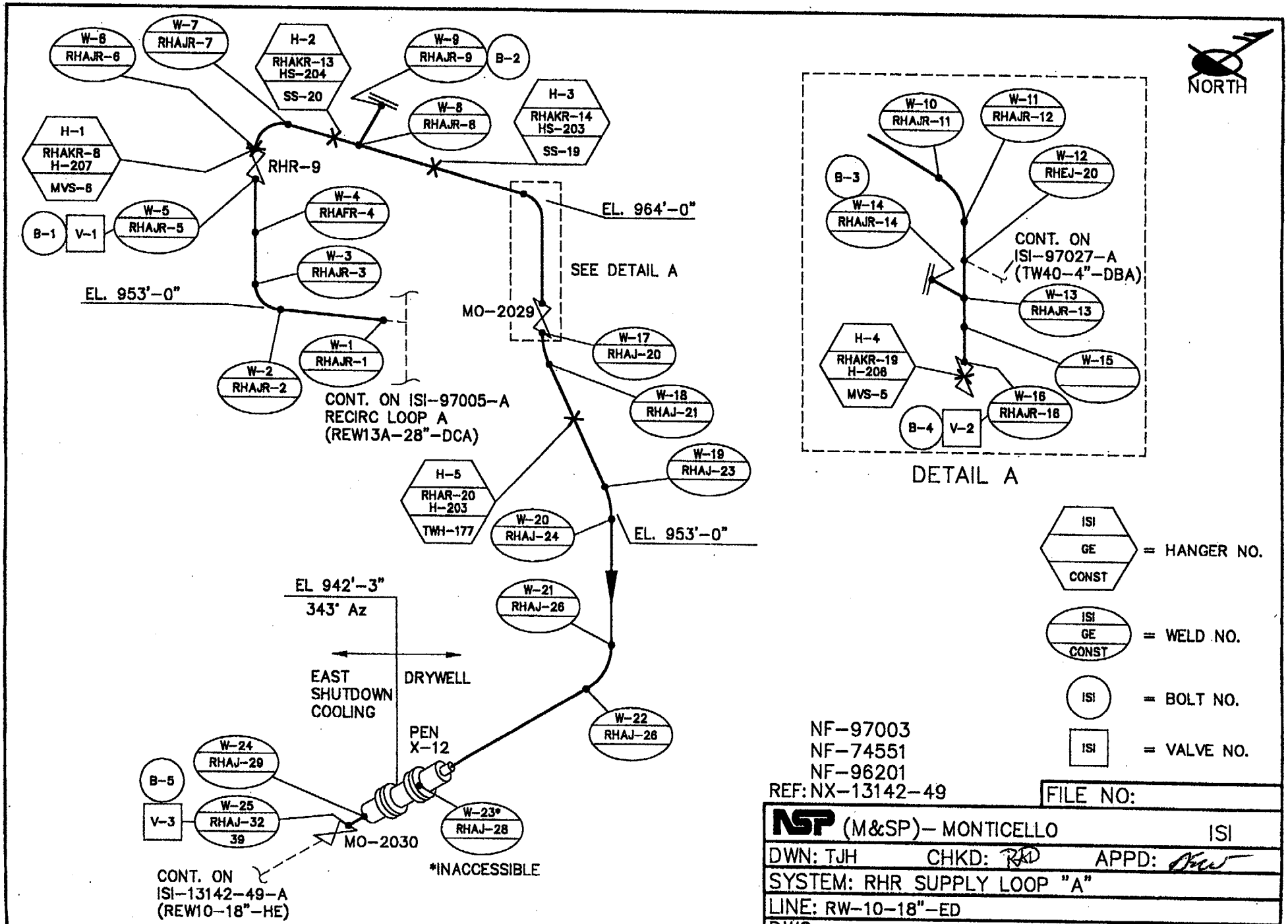
NORTH
W-6 RHAJR-6
W-7 RHAJR-7
H-2 RHAKR-13 HS-204 SS-20
W-9 RHAJR-9
B-2
W-8 RHAJR-8
H-3 RHAKR-14 HS-203 SS-19
H-1 RHAKR-8 H-207 MVS-6
B-1
V-1
W-5 RHAJR-5
RHR-9
W-4 RHAFR-4
W-3 RHAJR-3
EL. 953'-0"
W-1 RHAJR-1
W-2 RHAJR-2
CONT. ON ISI-97005-A RECIRC LOOP A (REW13A-28"-DCA)
EL. 964'-0"
SEE DETAIL A
MO-2029
W-17 RHAJ-20
W-18 RHAJ-21
W-19 RHAJ-23
H-5 RHAR-20 H-203 TWH-177
W-20 RHAJ-24
EL. 953'-0"
EL 942'-3"
343° Az
W-21 RHAJ-26
EAST SHUTDOWN COOLING
DRYWELL
PEN X-12
W-22 RHAJ-26
W-24 RHAJ-29
B-5
V-3
W-25 RHAJ-32 39
W-23* RHAJ-28
MO-2030
*INACCESSIBLE
CONT. ON ISI-13142-49-A (REW10-18"-HE)
W-10 RHAJR-11
W-11 RHAJR-12
W-12 RHEJ-20
B-3
W-14 RHAJR-14
CONT. ON ISI-97027-A (TW40-4"-DBA)
W-13 RHAJR-13
H-4 RHAKR-19 H-208 MVS-5
W-15
W-16 RHAJR-16
B-4
V-2
DETAIL A
ISI GE CONST = HANGER NO.
ISI GE CONST = WELD NO.
ISI = BOLT NO.
ISI = VALVE NO.
NF-97003
NF-74551
NF-96201
REF: NX-13142-49
FILE NO:
NSP (M&SP)- MONTICELLO ISI
DWN: TJH CHKD: RKD APPD:
SYSTEM: RHR SUPPLY LOOP "A"
LINE: RW-10-18"-ED
DWG: ISI-97003-B
REV: 03

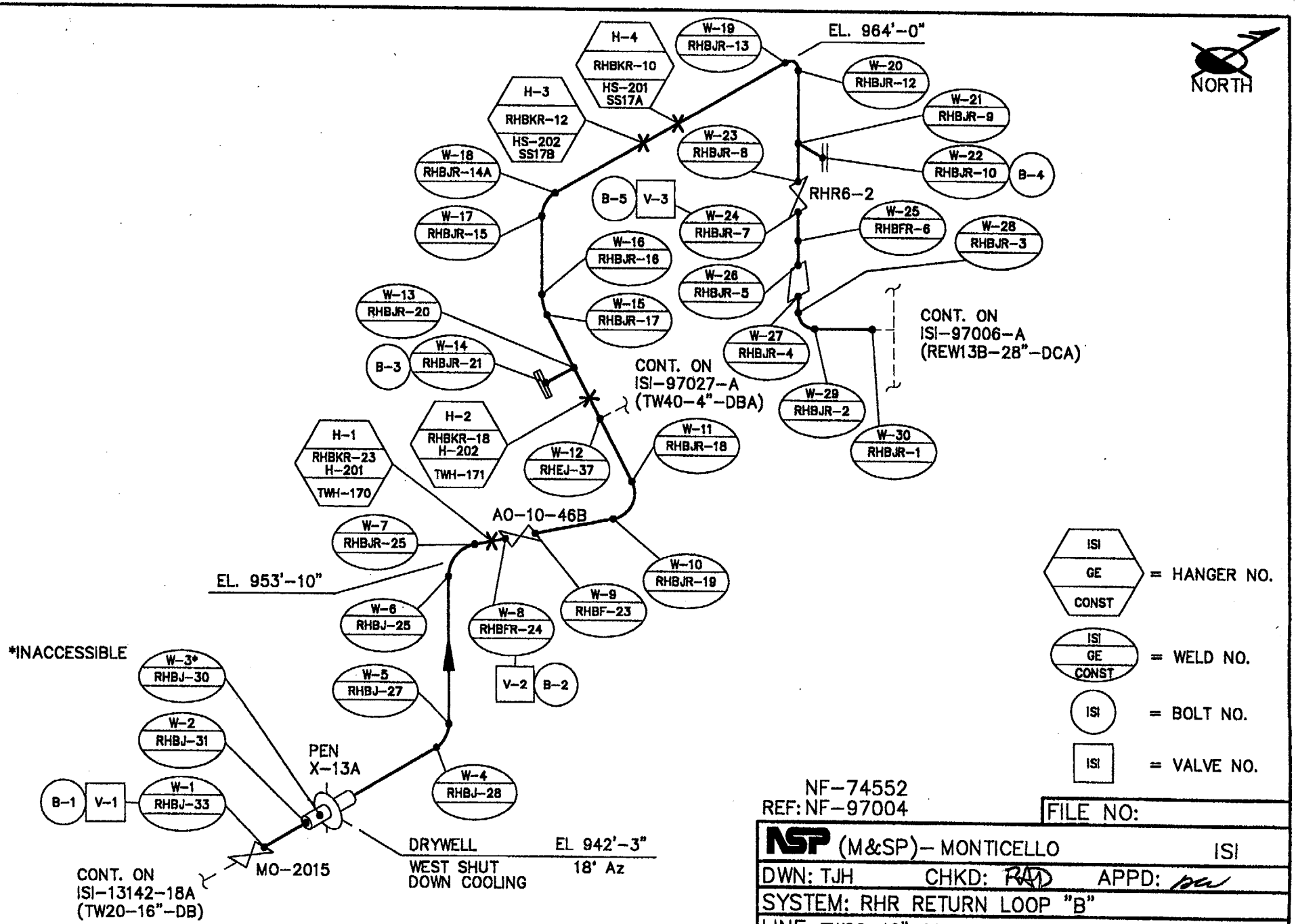

NF-74552
REF: NF-97004

FILE NO:

NSP (M&SP)- MONTICELLO ISI

DWN: TJH CHKD: RAD APPD: pw

SYSTEM: RHR RETURN LOOP "B"

LINE: TW20-16"-DB

DWG: ISI-97004-A REV: 03

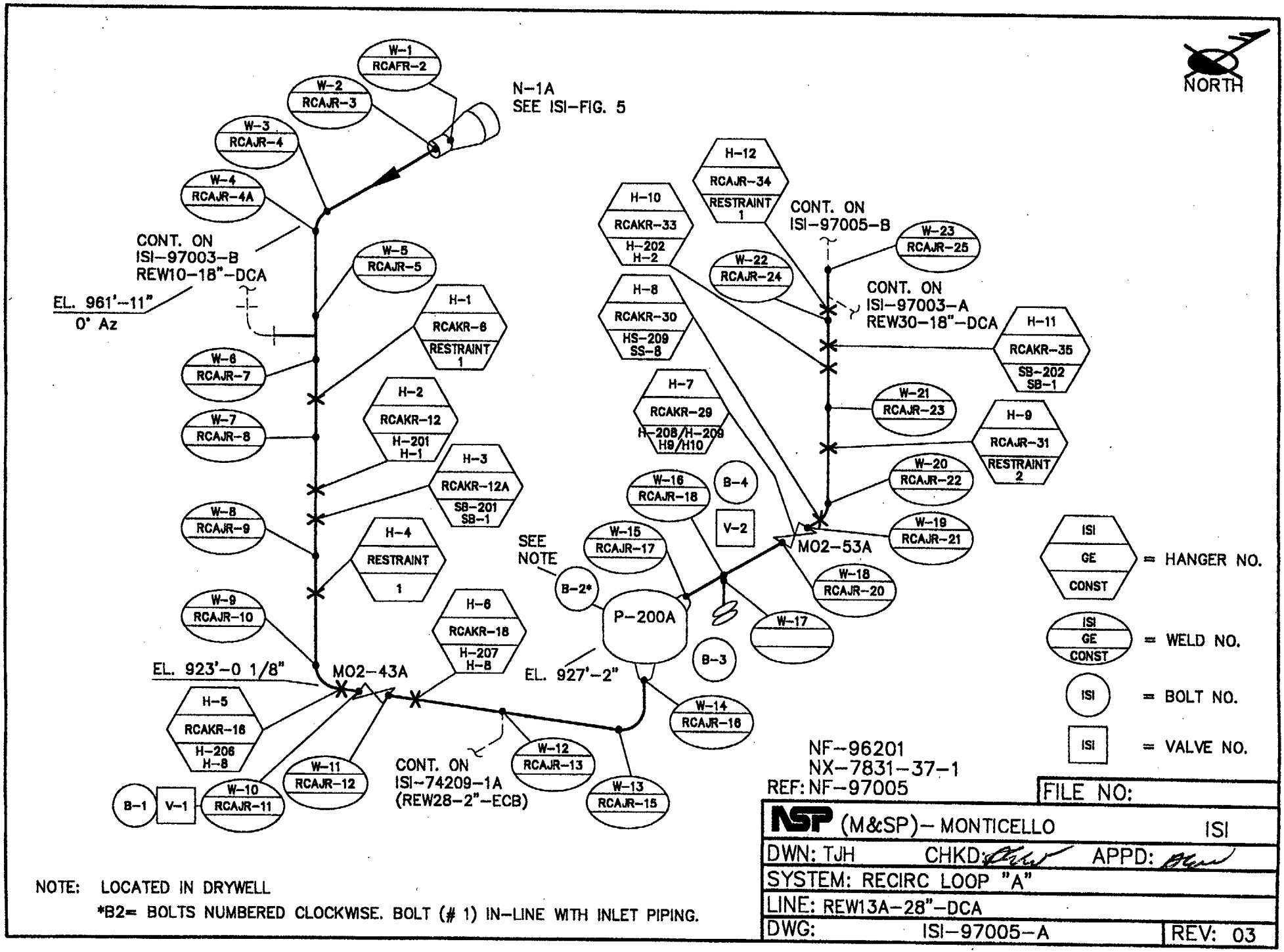

NF-96201
NX-7831-37-1
REF: NF-97005

NOTE: LOCATED IN DRYWELL
*B2= BOLTS NUMBERED CLOCKWISE. BOLT (# 1) IN-LINE WITH INLET PIPING.

FILE NO:

NSP (M&SP)- MONTICELLO ISI

DWN: TJH CHKD: APPD:

SYSTEM: RECIRC LOOP "A"

LINE: REW13A-28"-DCA

DWG: ISI-97005-A REV: 03

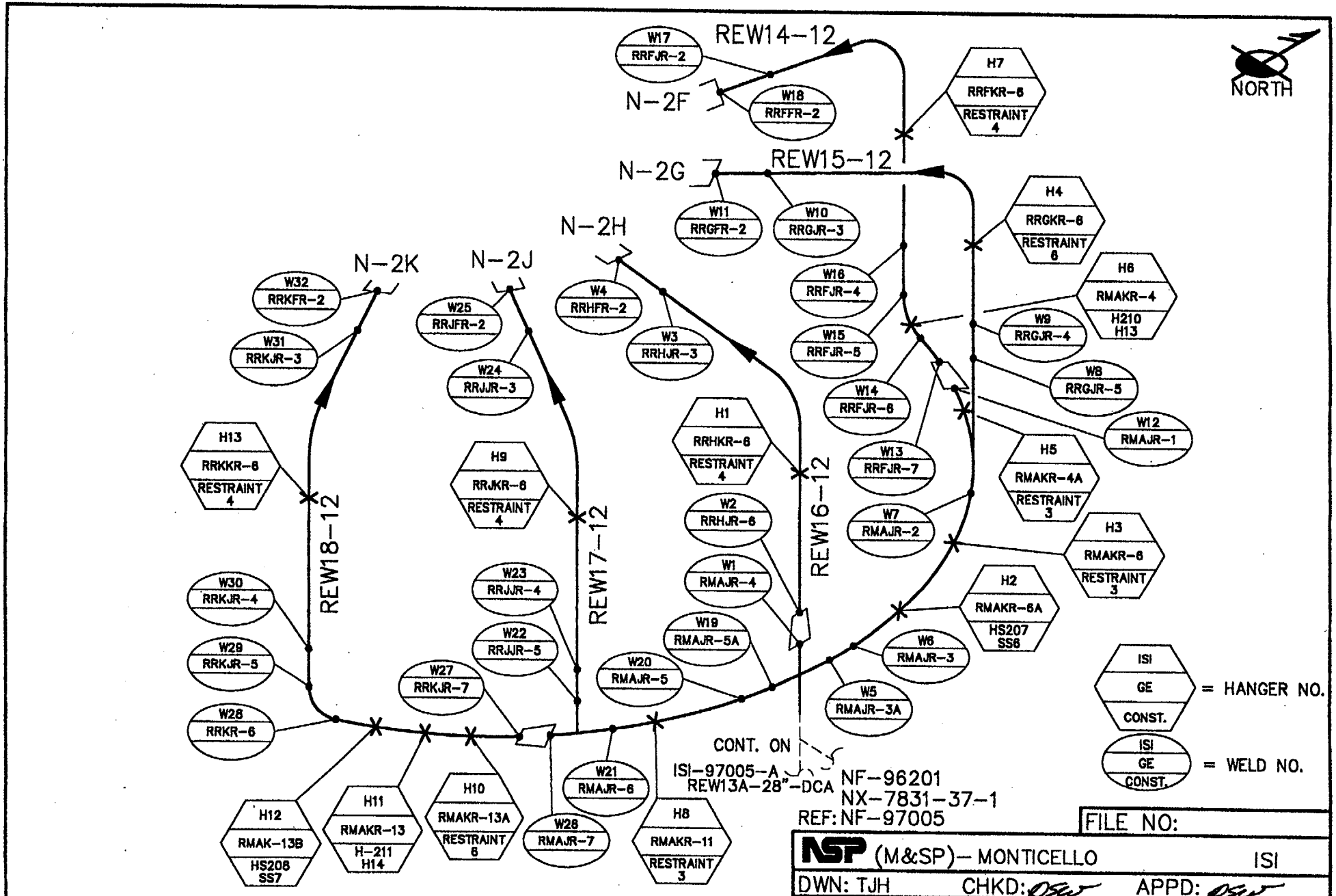
REW14-12
W17
RRFJR-2
N-2F
W18
RRFFR-2
H7
RRFKR-6
RESTRAINT
4
NORTH
N-2G
REW15-12
W11
RRGFR-2
W10
RRGJR-3
N-2H
H4
RRGKR-6
RESTRAINT
6
N-2K
N-2J
W32
RRKFR-2
W25
RRJFR-2
W4
RRHFR-2
W16
RRFJR-4
H6
RMAKR-4
H210
H13
W31
RRKJR-3
W24
RRJJR-3
W3
RRHJR-3
W15
RRFJR-5
W9
RRGJR-4
W14
RRFJR-6
W8
RRGJR-5
H1
RRHKR-6
RESTRAINT
4
W12
RMAJR-1
H13
RRKKR-6
RESTRAINT
4
H9
RRJKR-6
RESTRAINT
4
W13
RRFJR-7
H5
RMAKR-4A
RESTRAINT
3
W2
RRHJR-6
W7
RMAJR-2
H3
RMAKR-6
RESTRAINT
3
REW18-12
REW17-12
REW16-12
W30
RRKJR-4
W23
RRJJR-4
W1
RMAJR-4
H2
RMAKR-6A
HS207
SS6
W29
RRKJR-5
W22
RRJJR-5
W19
RMAJR-5A
W6
RMAJR-3
W27
RRKJR-7
W20
RMAJR-5
W5
RMAJR-3A
W28
RRKR-6
CONT. ON
ISI-97005-A
REW13A-28"-DCA
NF-96201
NX-7831-37-1
REF: NF-97005
W21
RMAJR-6
H12
RMAK-13B
HS208
SS7
H11
RMAKR-13
H-211
H14
H10
RMAKR-13A
RESTRAINT
6
W26
RMAJR-7
H8
RMAKR-11
RESTRAINT
3
ISI
GE
CONST.
= HANGER NO.
ISI
GE
CONST.
= WELD NO.
FILE NO:
NSP (M&SP)- MONTICELLO
ISI
DWN: TJH
CHKD:
APPD:
SYSTEM: RECIRC. MANIFOLD "A"
LINE: REW32-22"
DWG: ISI-97005-B
REV: 03

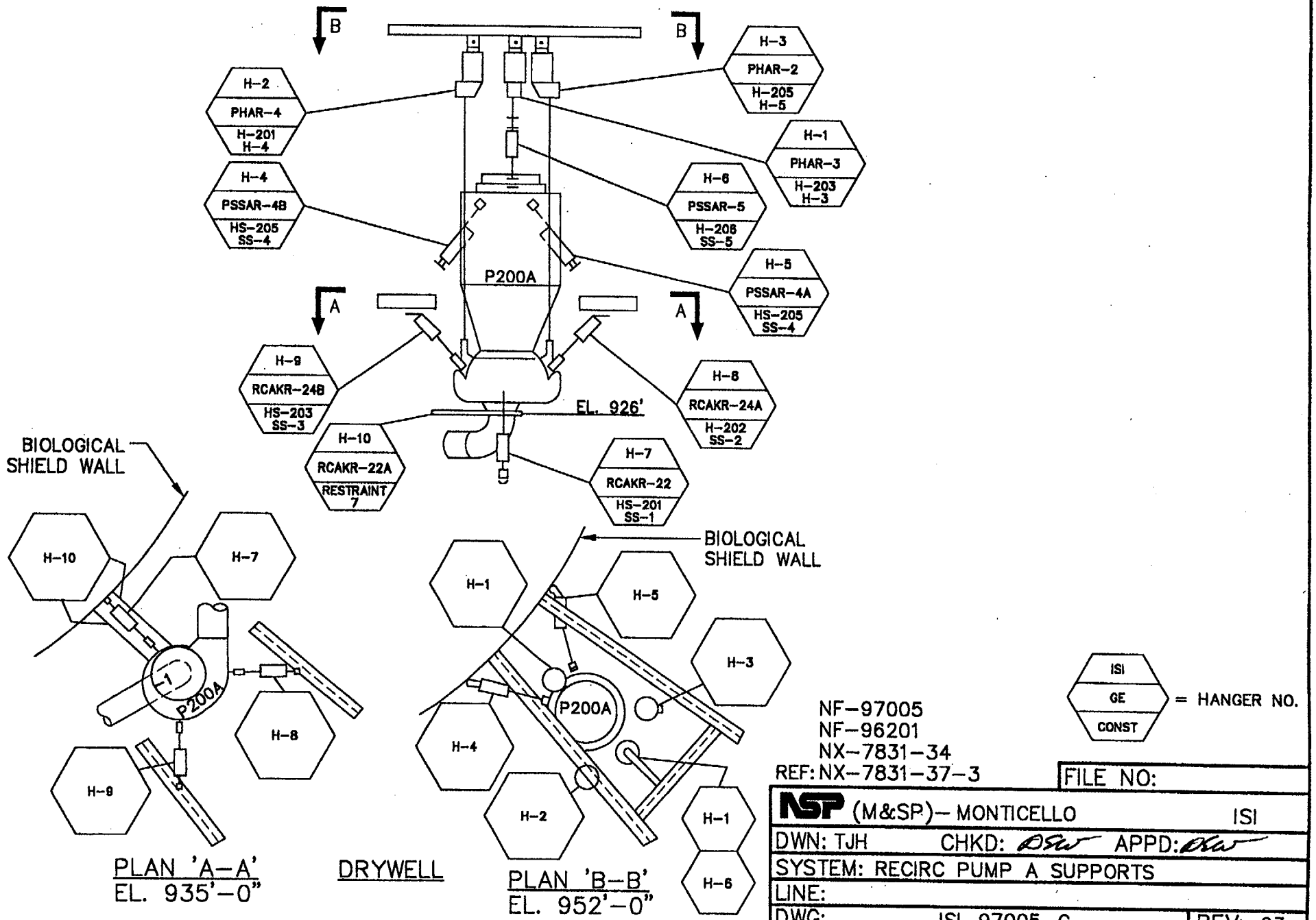

NF-97005
NF-96201
NX-7831-34
REF: NX-7831-37-3

FILE NO:	
NSP (M&SP)- MONTICELLO	ISI
DWN: TJH CHKD: DSW APPD: DSW	
SYSTEM: RECIRC PUMP A SUPPORTS	
LINE:	
DWG: ISI-97005-C	REV: 03

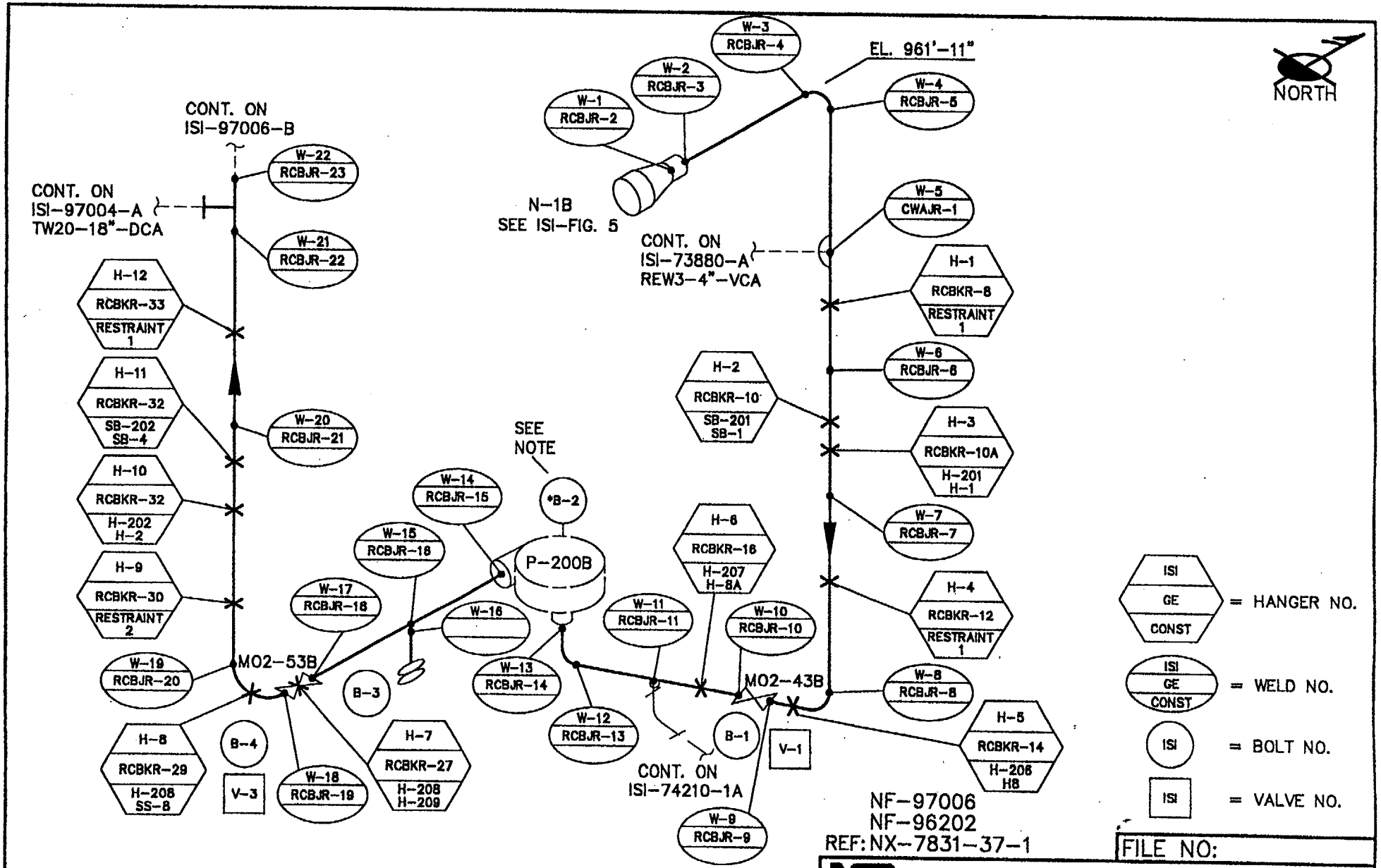

NF-97006
NF-96202
REF: NX-7831-37-1

NOTE: LOCATED IN DRYWELL
*B2= BOLTS NUMBERED CLOCKWISE. BOLT (# 1) IN-LINE WITH INLET PIPING.

FILE NO:	
NSP (M&SP)-- MONTICELLO	ISI
DWN: TJH CHKD: DSW APPD: DSW	
SYSTEM: RECIRC LOOP "B"	
LINE: REW13B-28"-DCA	
DWG: ISI-97006-A	REV: 03

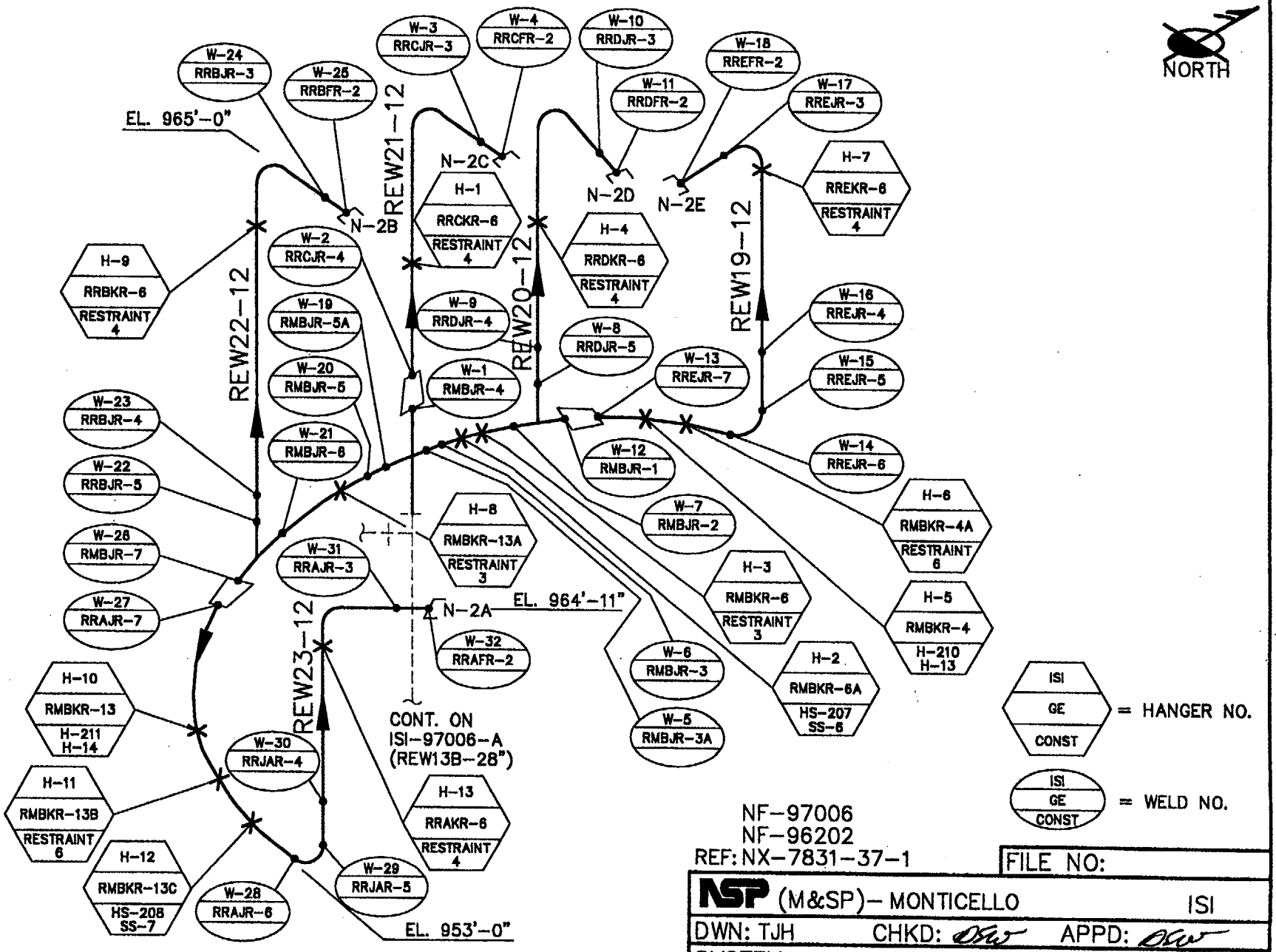

NF-97006
NF-96202
REF: NX-7831-37-1

FILE NO:	
NSP (M&SP)- MONTICELLO	ISI
DWN: TJH CHKD: DSW APPD: DSW	
SYSTEM: RECIRC MANIFOLD "B"	
LINE: REW32-22"	
DWG: ISI-97006-B	REV: 03

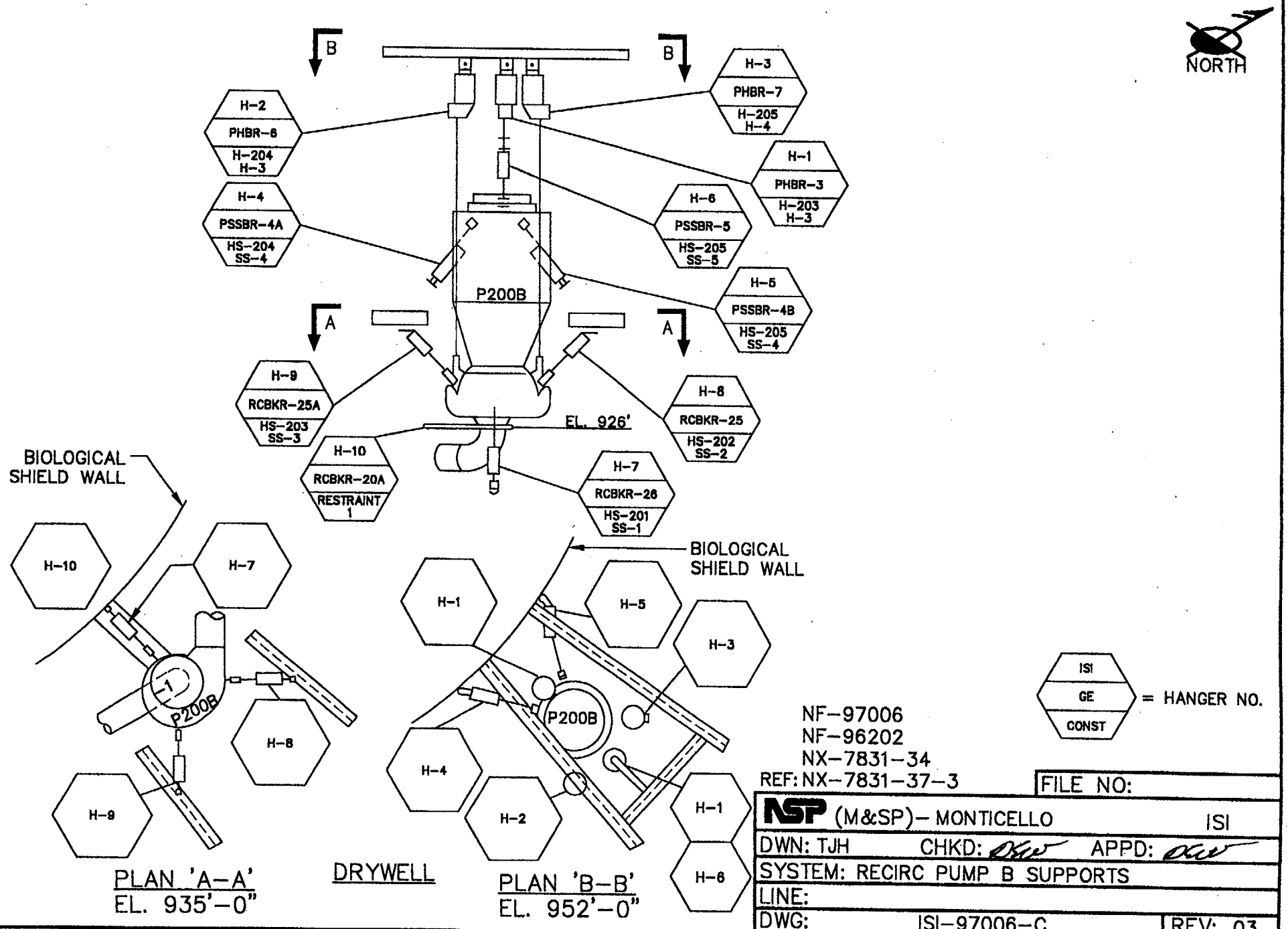
NORTH
B
B
A
A
H-2
PHBR-6
H-204
H-3
H-3
PHBR-7
H-205
H-4
H-1
PHBR-3
H-203
H-3
H-4
PSSBR-4A
HS-204
SS-4
H-6
PSSBR-5
HS-205
SS-5
P200B
H-5
PSSBR-4B
HS-205
SS-4
H-9
RCBKR-25A
HS-203
SS-3
H-8
RCBKR-25
HS-202
SS-2
EL. 926'
H-10
RCBKR-20A
RESTRAINT
1
H-7
RCBKR-26
HS-201
SS-1
BIOLOGICAL
SHIELD WALL
H-10
H-7
H-9
H-8
P200B
1
PLAN 'A-A'
EL. 935'-0"
DRYWELL
BIOLOGICAL
SHIELD WALL
H-1
H-5
H-3
H-4
H-2
H-1
H-6
P200B
PLAN 'B-B'
EL. 952'-0"
ISI
GE
CONST
= HANGER NO.
NF-97006
NF-96202
NX-7831-34
REF: NX-7831-37-3
FILE NO:
NSP (M&SP)- MONTICELLO
ISI
DWN: TJH
CHKD:
APPD:
SYSTEM: RECIRC PUMP B SUPPORTS
LINE:
DWG: ISI-97006-C
REV: 03

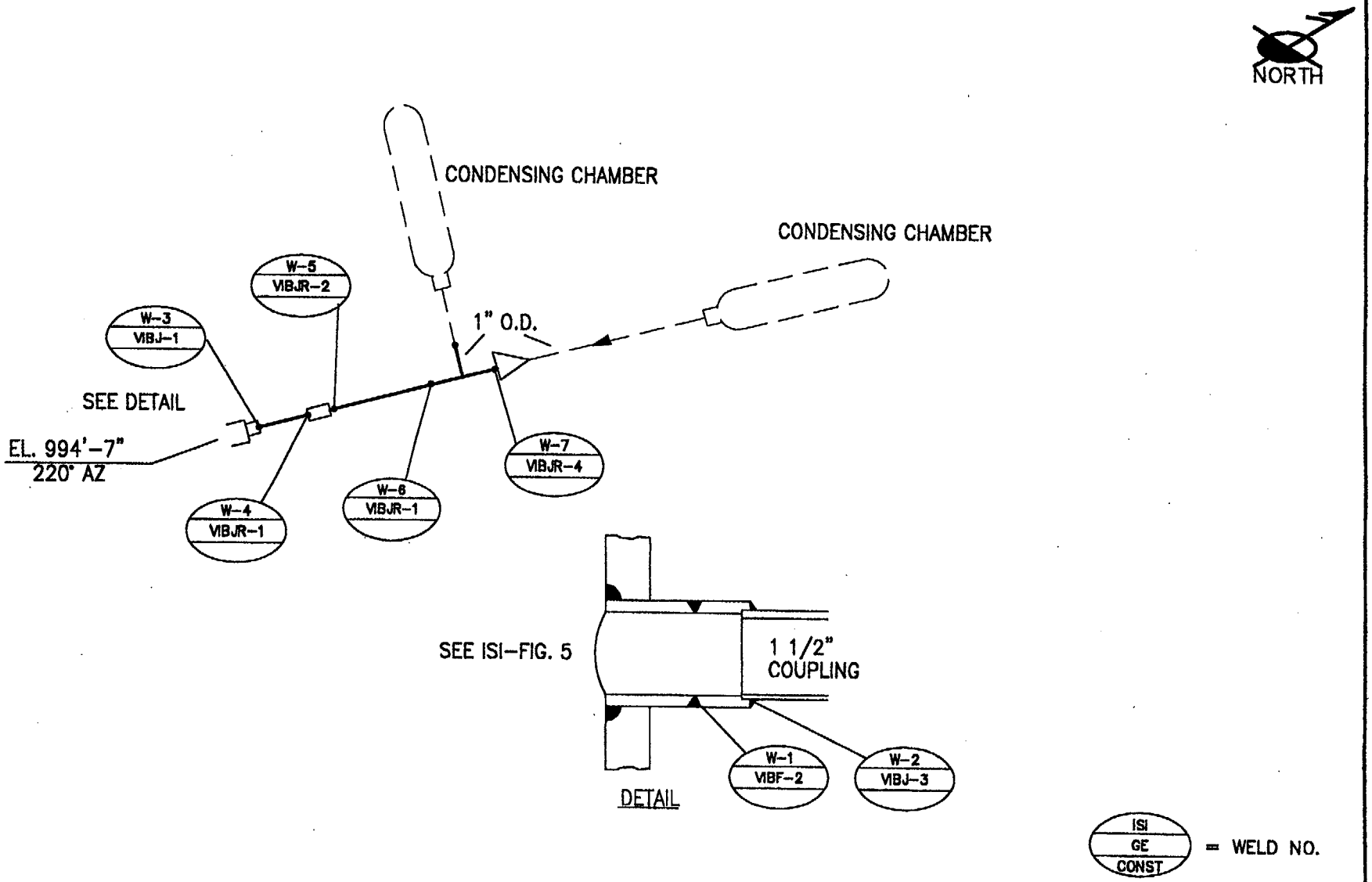

NOTE: LOCATED IN DRYWELL

REF: NF-97007

FILE NO:

NSP (M&SP)- MONTICELLO ISI

DWN: tjh CHKD: APPD:

SYSTEM: RX INST. NOZZLE N-11B

LINE: RLM2- 1 1/2"-DCA

DWG: ISI-97007-A REV: 03

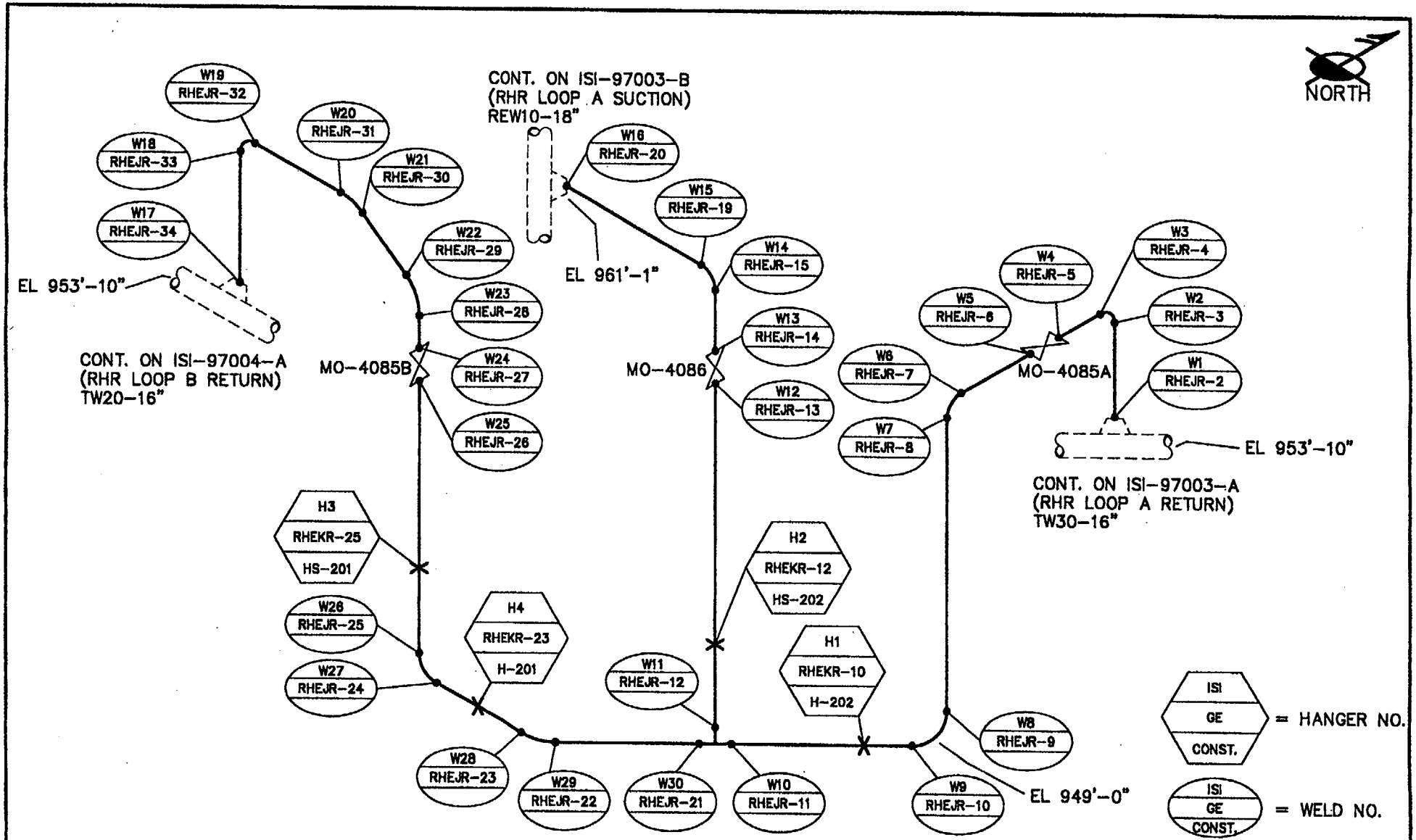

NOTE: LOCATED INN DRYWELL

REF: NF-97027

FILE NO:

NSP (M&SP)– MONTICELLO ISI

DWN: TJH CHKD: APPD:

SYSTEM: RHR EQUALIZER

LINE: TW40-4"-DBA

DWG: ISI-97027-A REV: 03

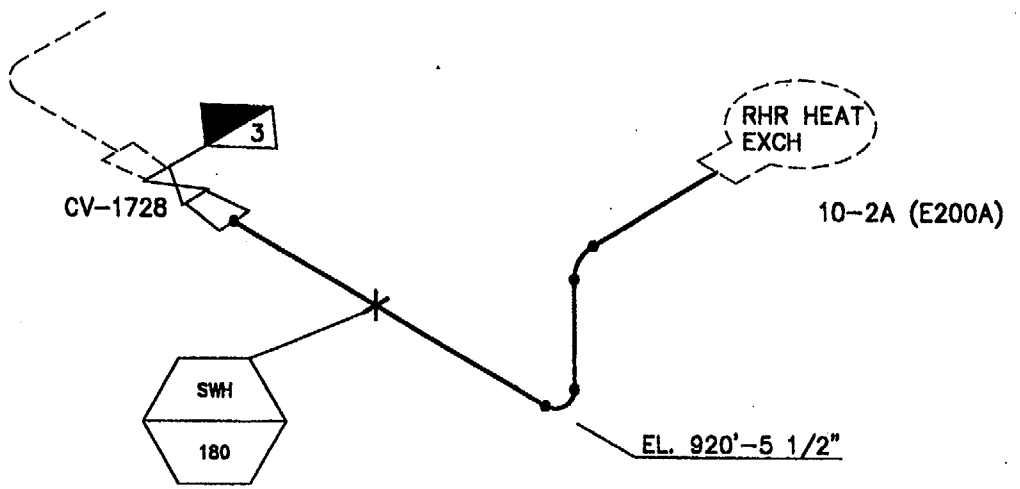

ISI / CONST = HANGER NO.

NOTE: LOCATED IN RHR "A" ROOM

REF: NX-13142-16	FILE NO:
NSP (M&SP)- MONTICELLO	ISI
DWN: TJH CHKD: APPD:	
SYSTEM: RHR SERVICE WATER	
LINE: SW11-16"-GF	
DWG: ND-ISI-100	REV: 01

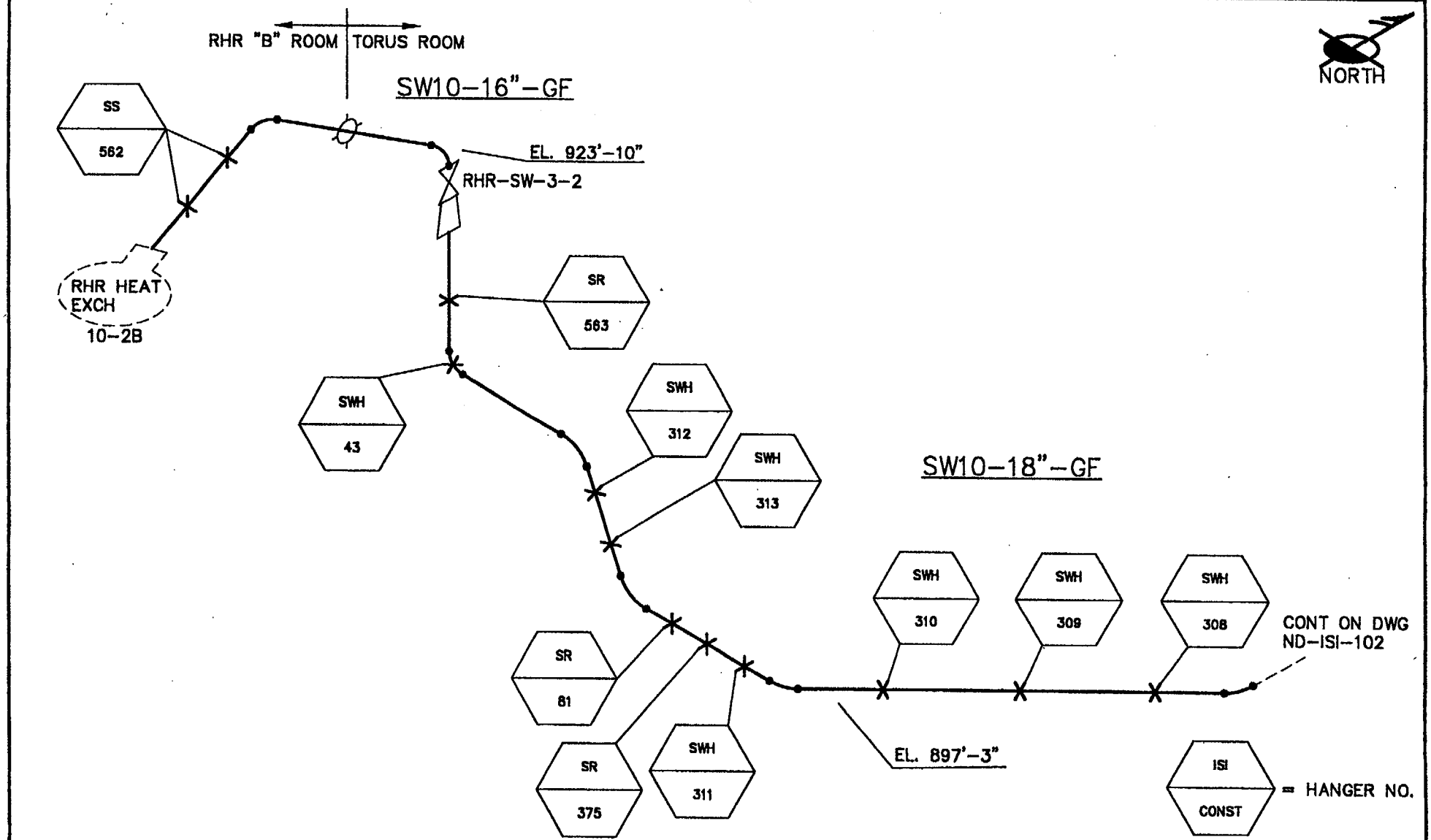

NOTE: LOCATED IN REACTOR BLDG

REF: NX-13142-50

FILE NO:

NSP (M&SP)- MONTICELLO ISI

DWN: TJH CHKD: APPD:

SYSTEM: RHR SERVICE WATER

LINE: AS NOTED

DWG: ND-ISI-101 REV: 01

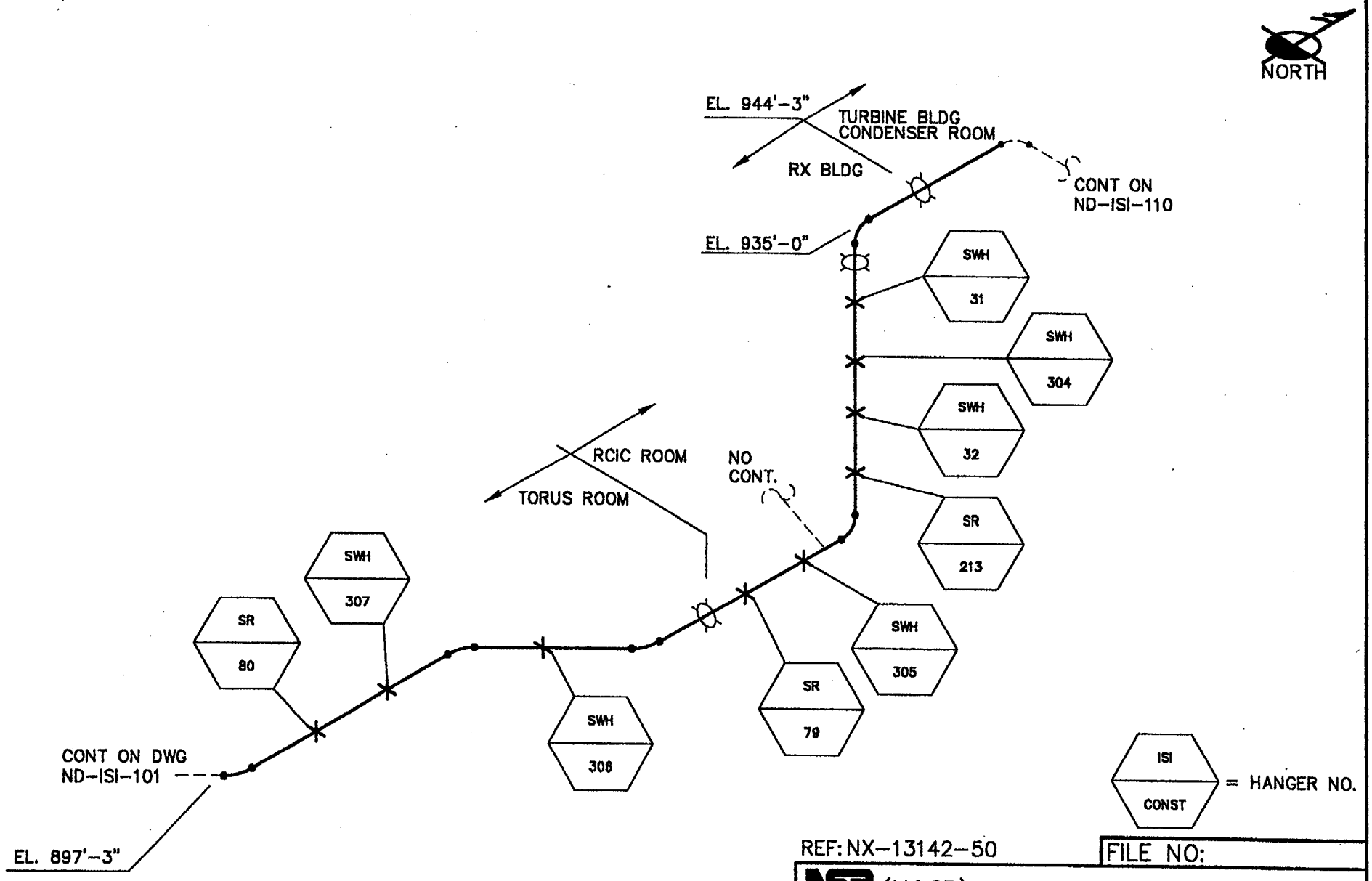

NOTE: LOCATED IN REACTOR BLDG

REF: NX-13142-50

FILE NO:

NSP (M&SP)- MONTICELLO ISI

DWN: TJH CHKD: APPD:

SYSTEM: RHR SERVICE WATER

LINE: SW10-18"-GF

DWG: ND-ISI-102 REV: 01

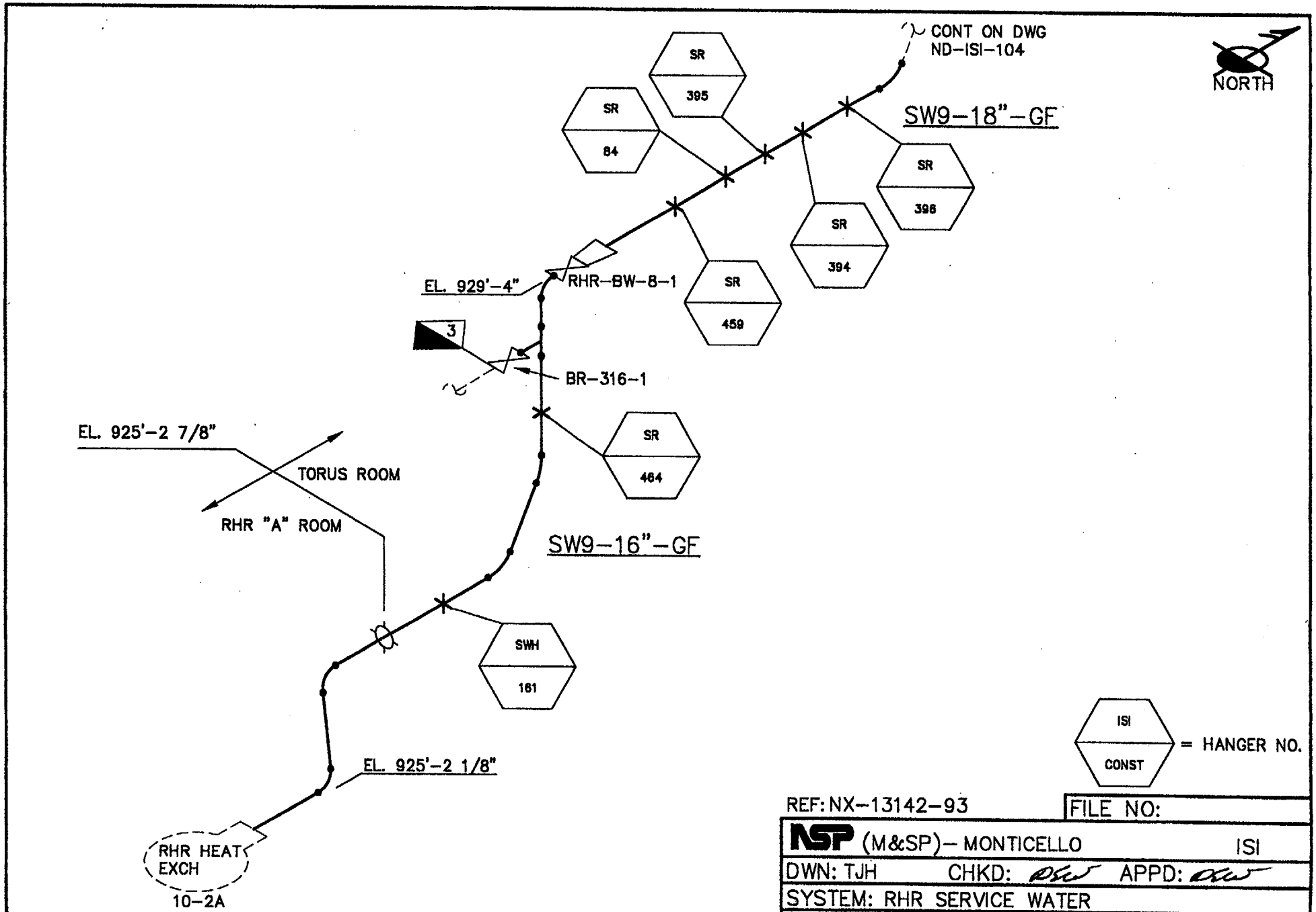

NOTE: LOCATED IN REACTOR BLDG

REF: NX-13142-93

FILE NO:

NSP (M&SP)- MONTICELLO ISI

DWN: TJH CHKD: APPD:

SYSTEM: RHR SERVICE WATER

LINE: AS NOTED

DWG: ND-ISI-103 REV: 01

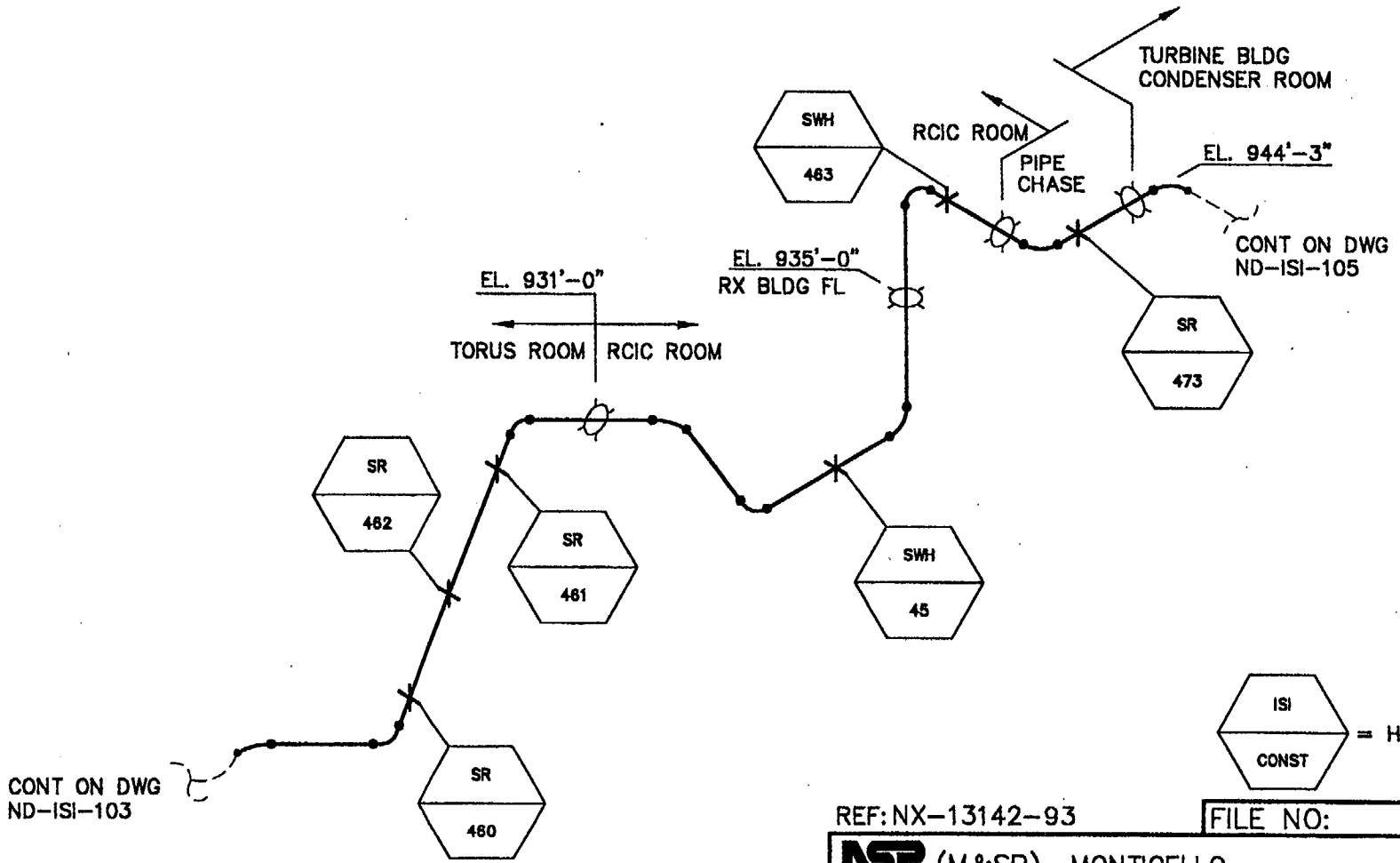

NOTE: LOCATED IN REACTOR BLDG

REF: NX-13142-93

FILE NO:

NSP (M&SP)-- MONTICELLO ISI

DWN: TJH CHKD: DSW APPD: DSW

SYSTEM: RHR SERVICE WATER

LINE: SW9-18"-GF

DWG: ND-ISI-104 REV: 01

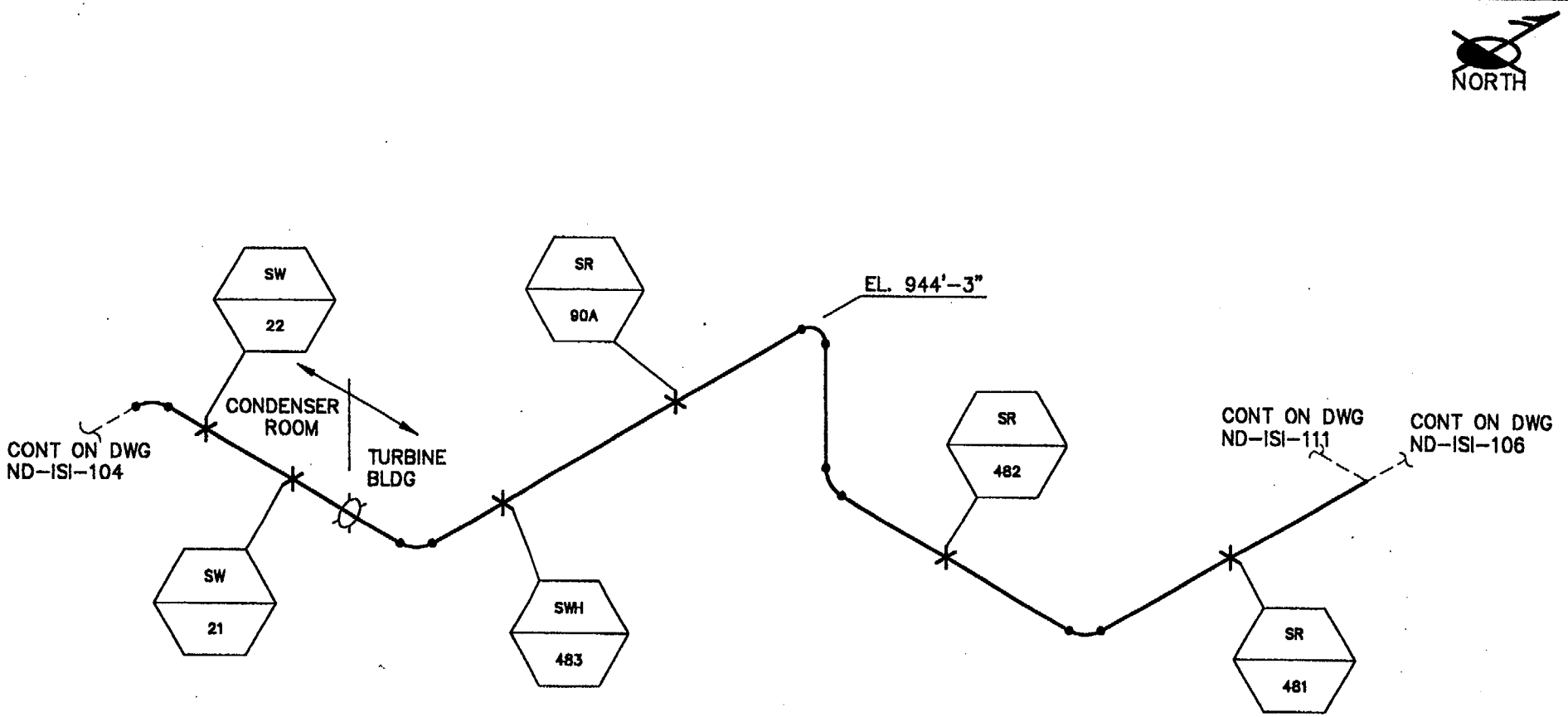

NOTE: LOCATED IN TURBINE BLDG

REF: NX-13142-12

FILE NO:

NSP (M&SP)- MONTICELLO ISI

DWN: TJH CHKD: DSW APPD: DSW

SYSTEM: RHR SERVICE WATER

LINE: SW9-18"-GF

DWG: ND-ISI-105 REV: 01

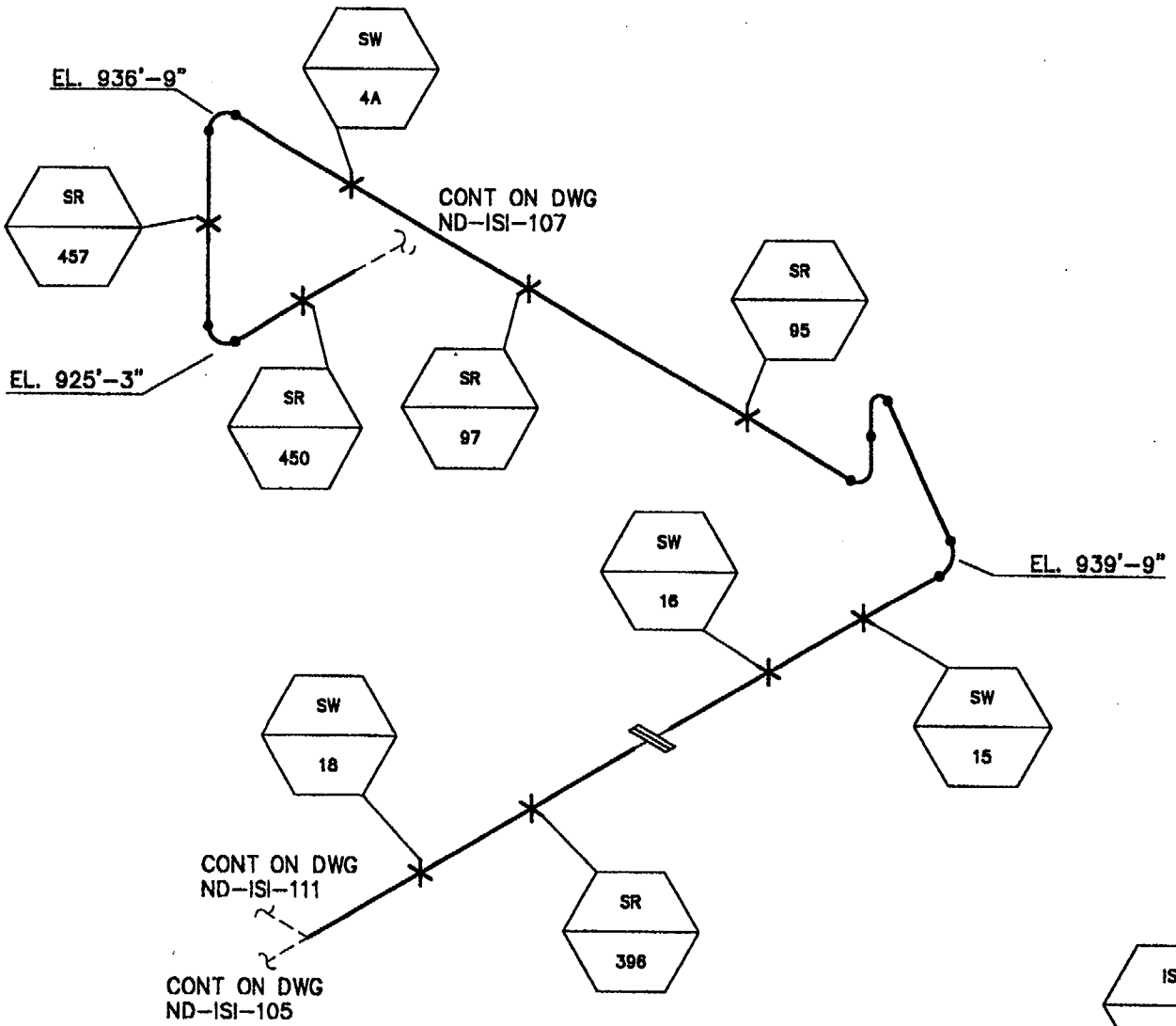

NOTE: LOCATED IN TURBINE BLDG

REF: NX-13142-12

FILE NO:

NSP (M&SP)- MONTICELLO ISI

DWN: TJH CHKD: APPD:

SYSTEM: RHR SERVICE WATER

LINE: SW9-18"-GF

DWG: ND-ISI-106 REV: 01

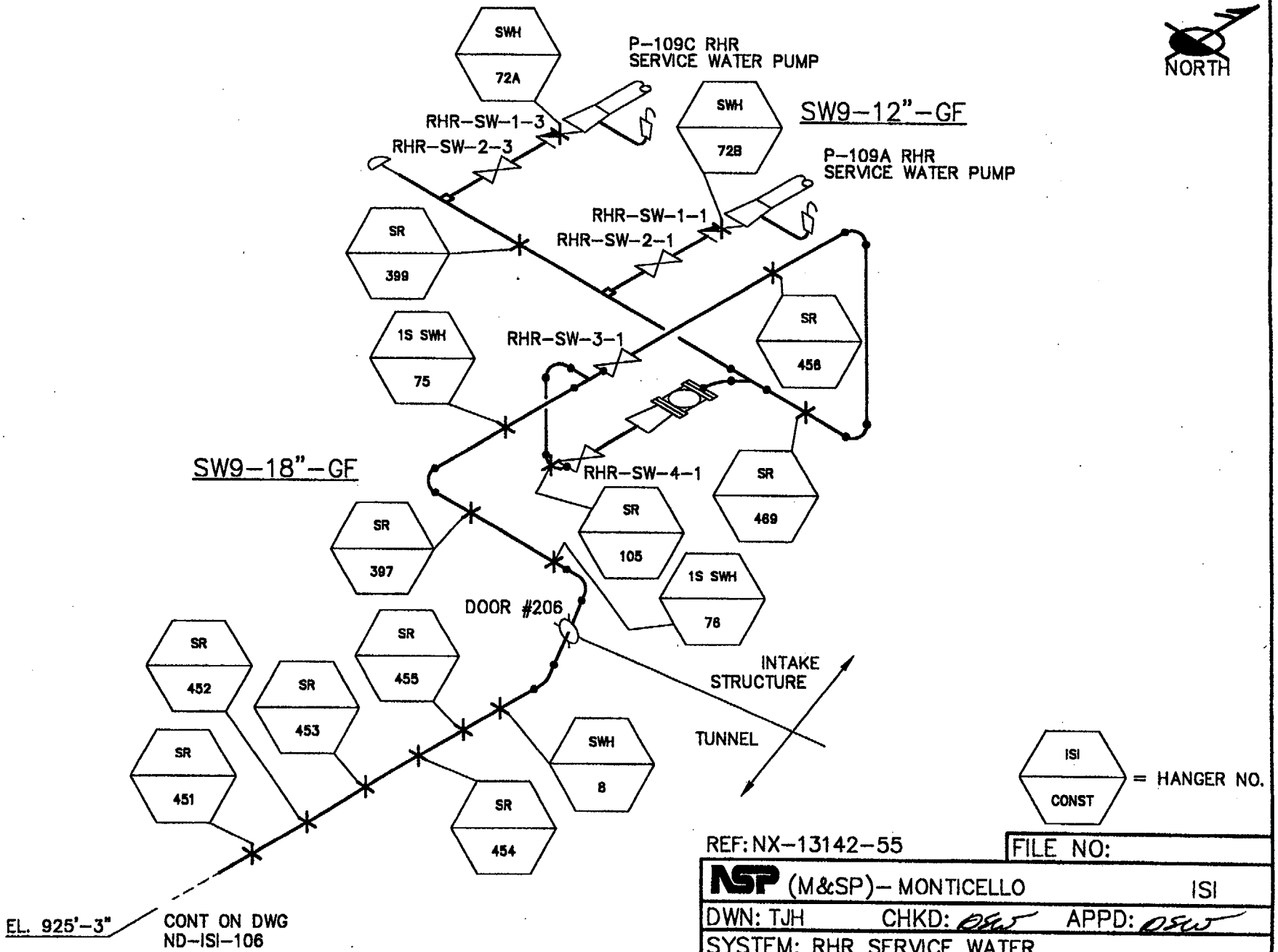

NOTE: LOCATED IN TURBINE BLDG

REF: NX-13142-55

FILE NO:

NSP (M&SP)- MONTICELLO ISI

DWN: TJH CHKD: DSW APPD: DSW

SYSTEM: RHR SERVICE WATER

LINE: AS NOTED

DWG: ND-ISI-107 REV: 01

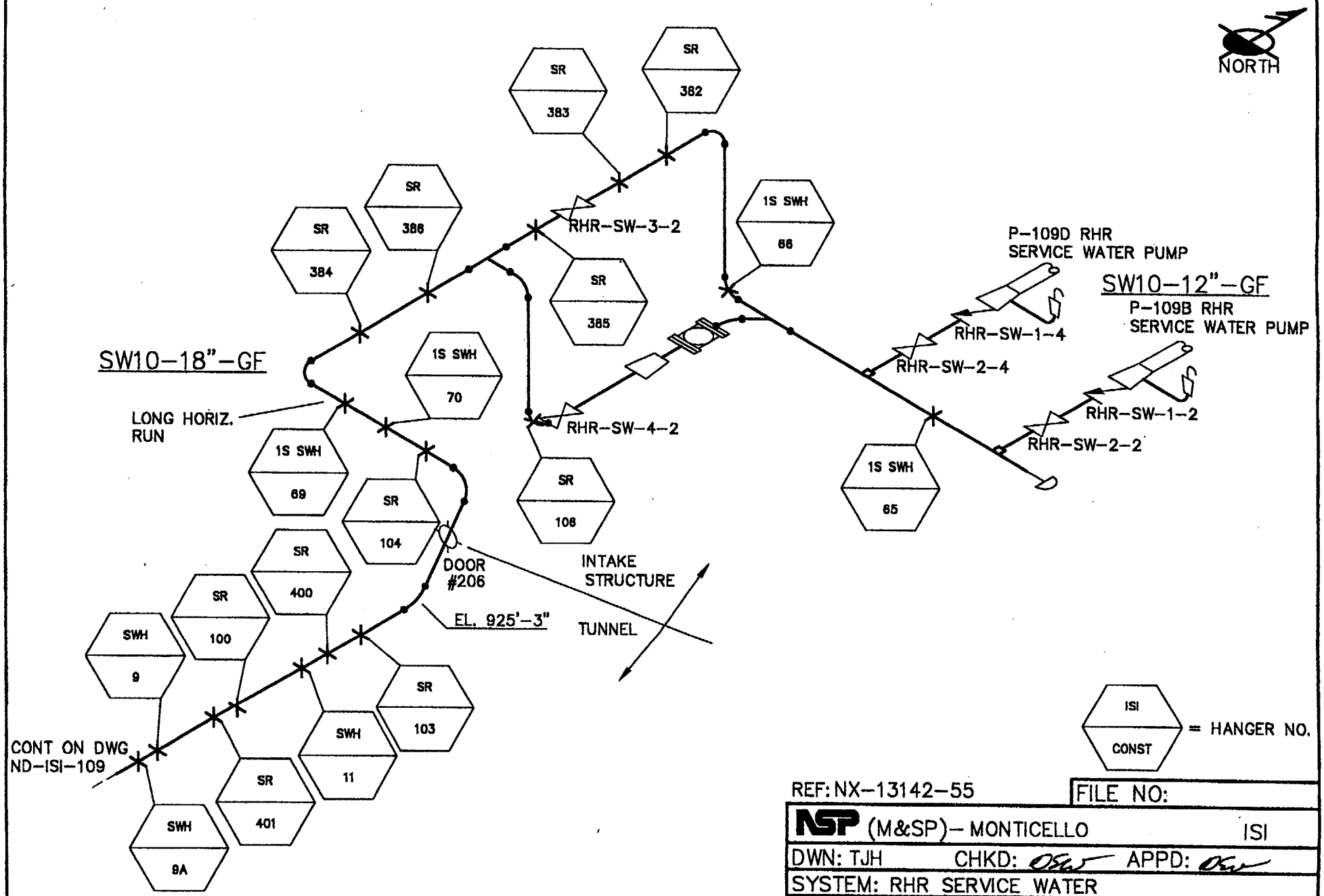

NOTE: LOCATED IN TURBINE BLDG

REF: NX-13142-55

FILE NO:

NSP (M&SP) – MONTICELLO ISI

DWN: TJH CHKD: APPD:

SYSTEM: RHR SERVICE WATER

LINE: AS NOTED

DWG: ND-ISI-108 REV: 01

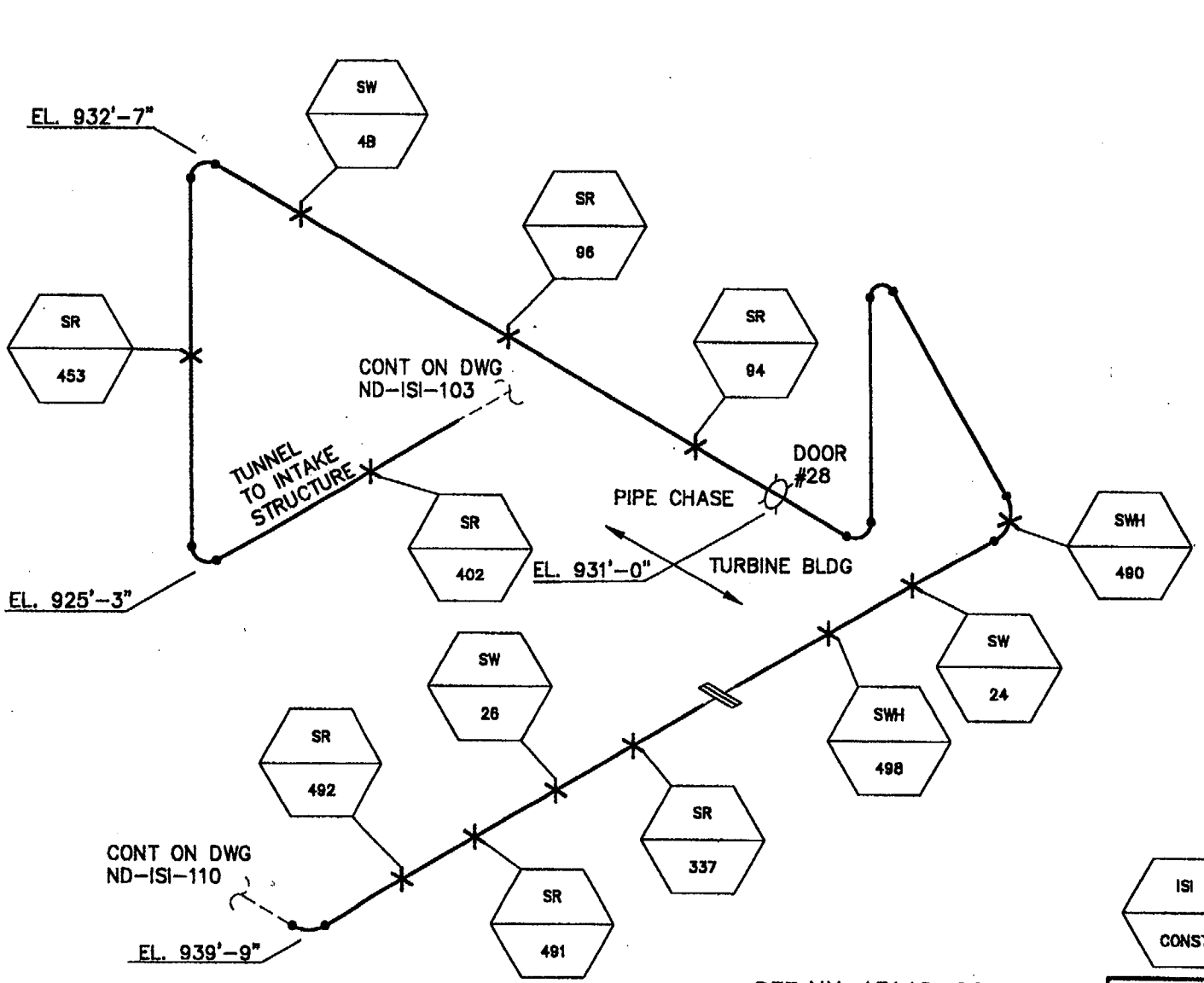

NOTE: LOCATED IN TURBINE BLDG

REF: NX-13142-92

FILE NO:

NSP (M&SP)- MONTICELLO ISI

DWN: TJH CHKD: APPD:

SYSTEM: RHR SERVICE WATER

LINE: SW10-18"-GF

DWG: ND-ISI-109 REV: 01

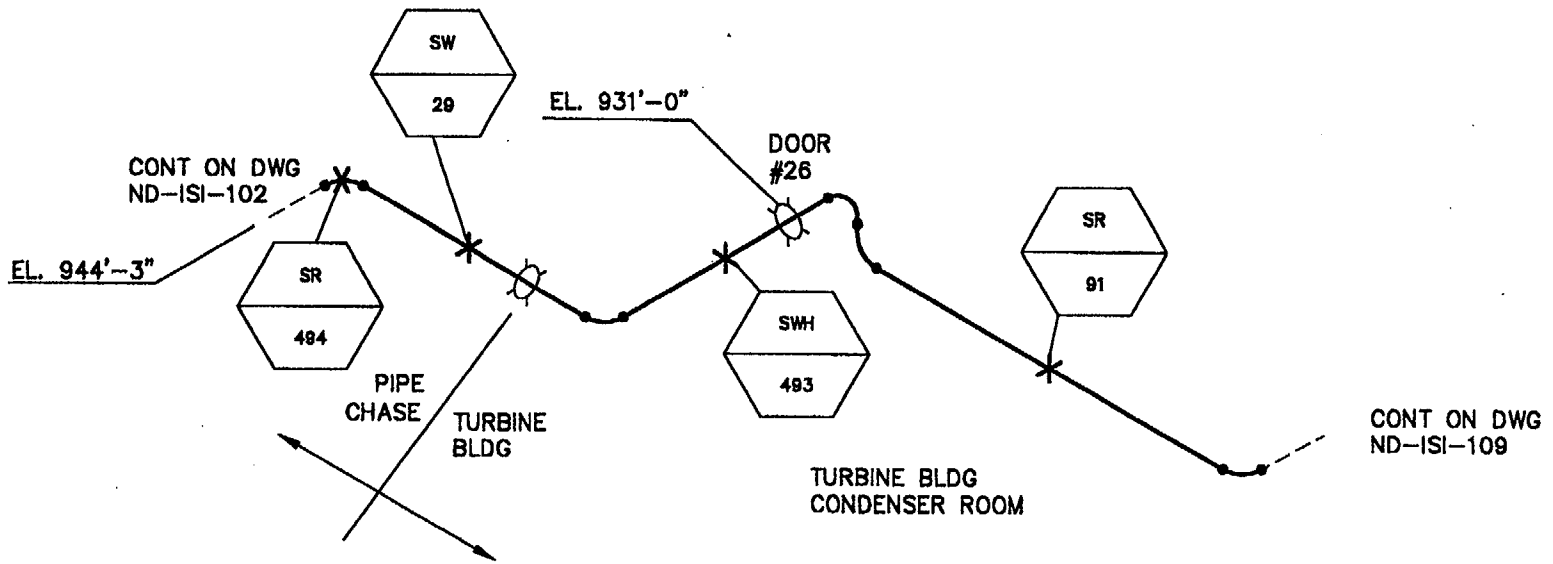

ISI / CONST = HANGER NO.

NOTE: LOCATED IN TURBINE BLDG

REF: NX-13142-92

FILE NO:

NSP (M&SP)- MONTICELLO ISI

DWN: TJH CHKD: DSW APPD: DSW

SYSTEM: RHR SERVICE WATER

LINE: SW10-18"-GF

DWG: ND-ISI-110 REV: 01

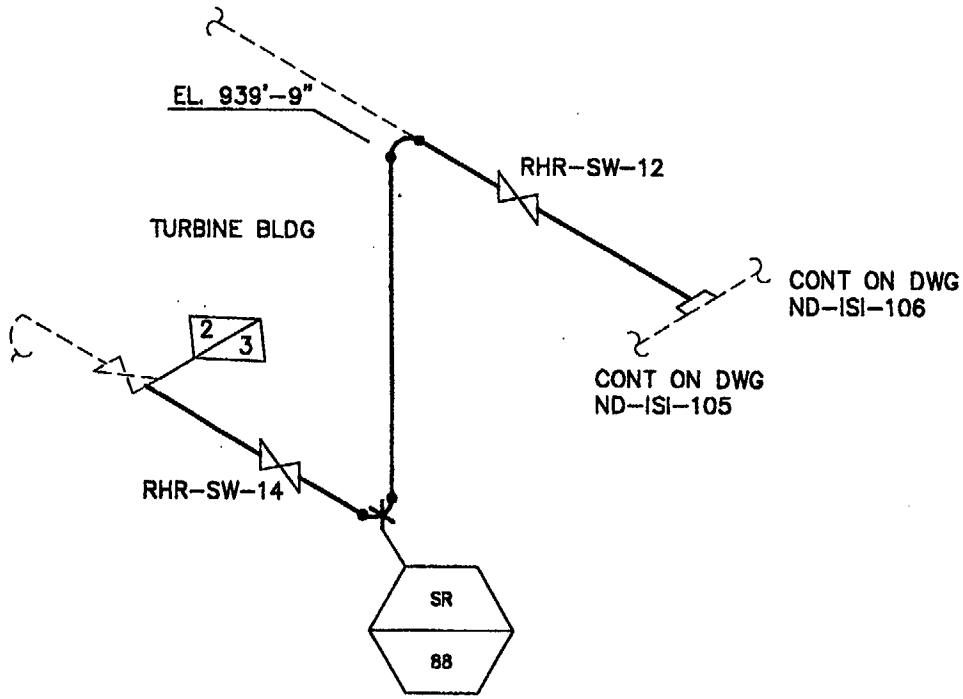

ISI / CONST = HANGER NO.

NOTE: LOCATED IN TURBINE BLDG (FLOOR EL. 931'-0")

REF: NX-13142-48	FILE NO:
NSP (M&SP)- MONTICELLO	ISI
DWN: TJH CHKD: DAW APPD: DAW	
SYSTEM: RHR SERVICE WATER	
LINE: SW9-8"-GF	
DWG: ND-ISI-111	REV: 01

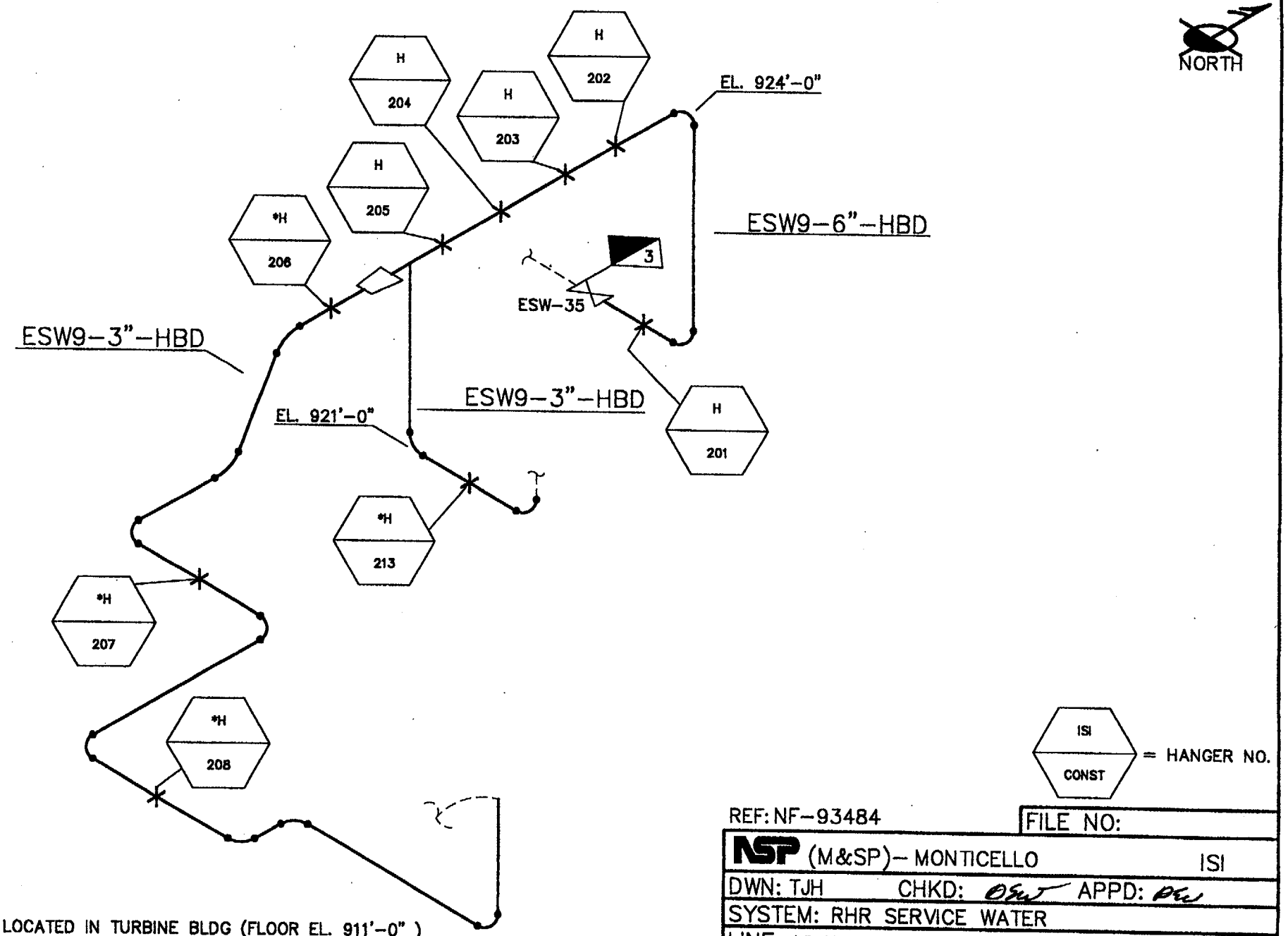

NOTE: LOCATED IN TURBINE BLDG (FLOOR EL. 911'-0")
* EXAM NOT REQUIRED.

REF: NF-93484

FILE NO:

NSP (M&SP)- MONTICELLO ISI

DWN: TJH CHKD: OEW APPD: DEL

SYSTEM: RHR SERVICE WATER

LINE: AS NOTED

DWG: ND-ISI-123 REV: 01

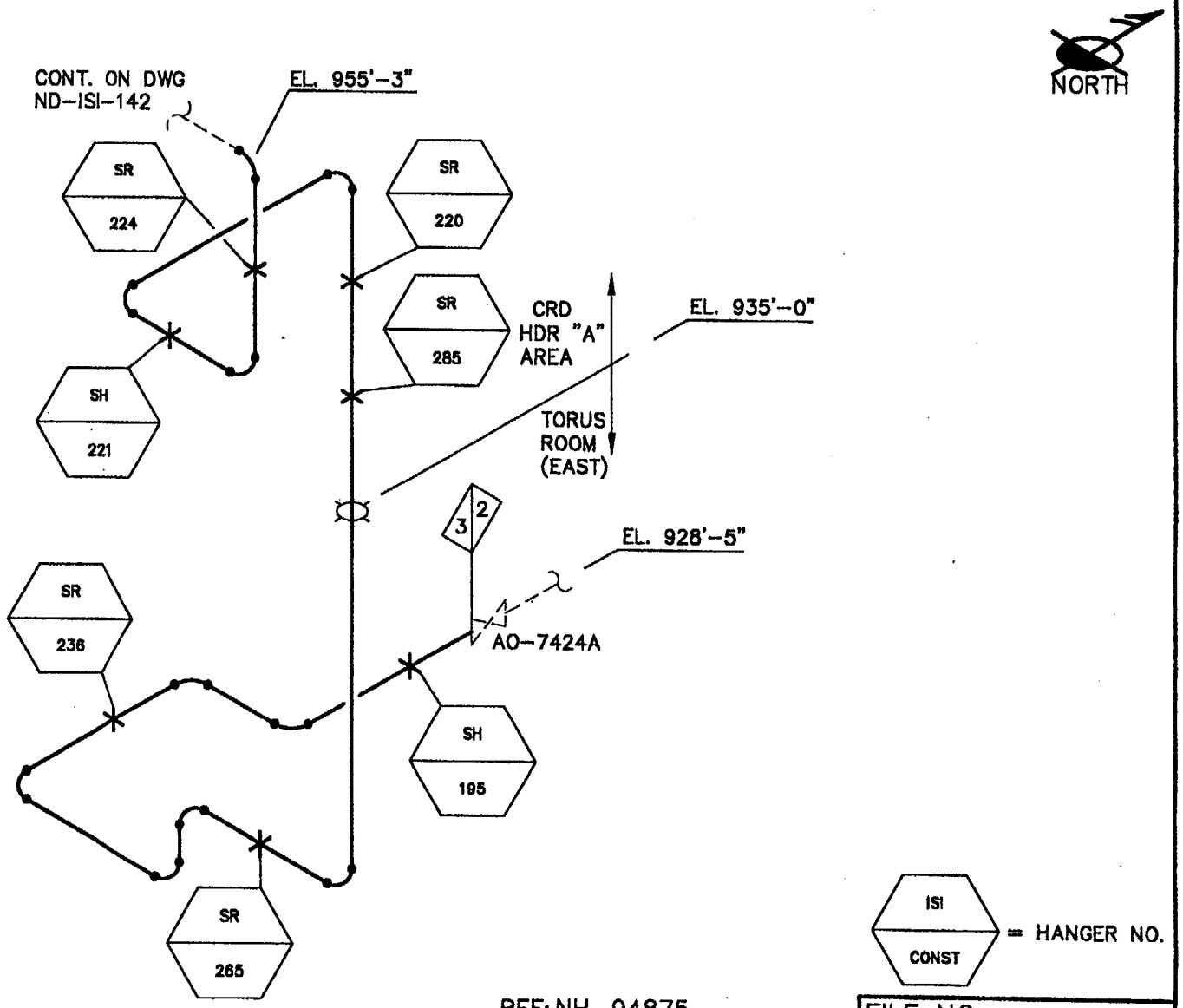

NOTE: LOCATED IN REACTOR BLDG

REF: NH-94875

FILE NO:

NSP (M&SP)- MONTICELLO ISI

DWN: TJH CHKD: APPD:

SYSTEM: COMBUSTIBLE GAS CONTROL

LINE: CGC2A-6"-CA

DWG: ND-ISI-141 REV: 01

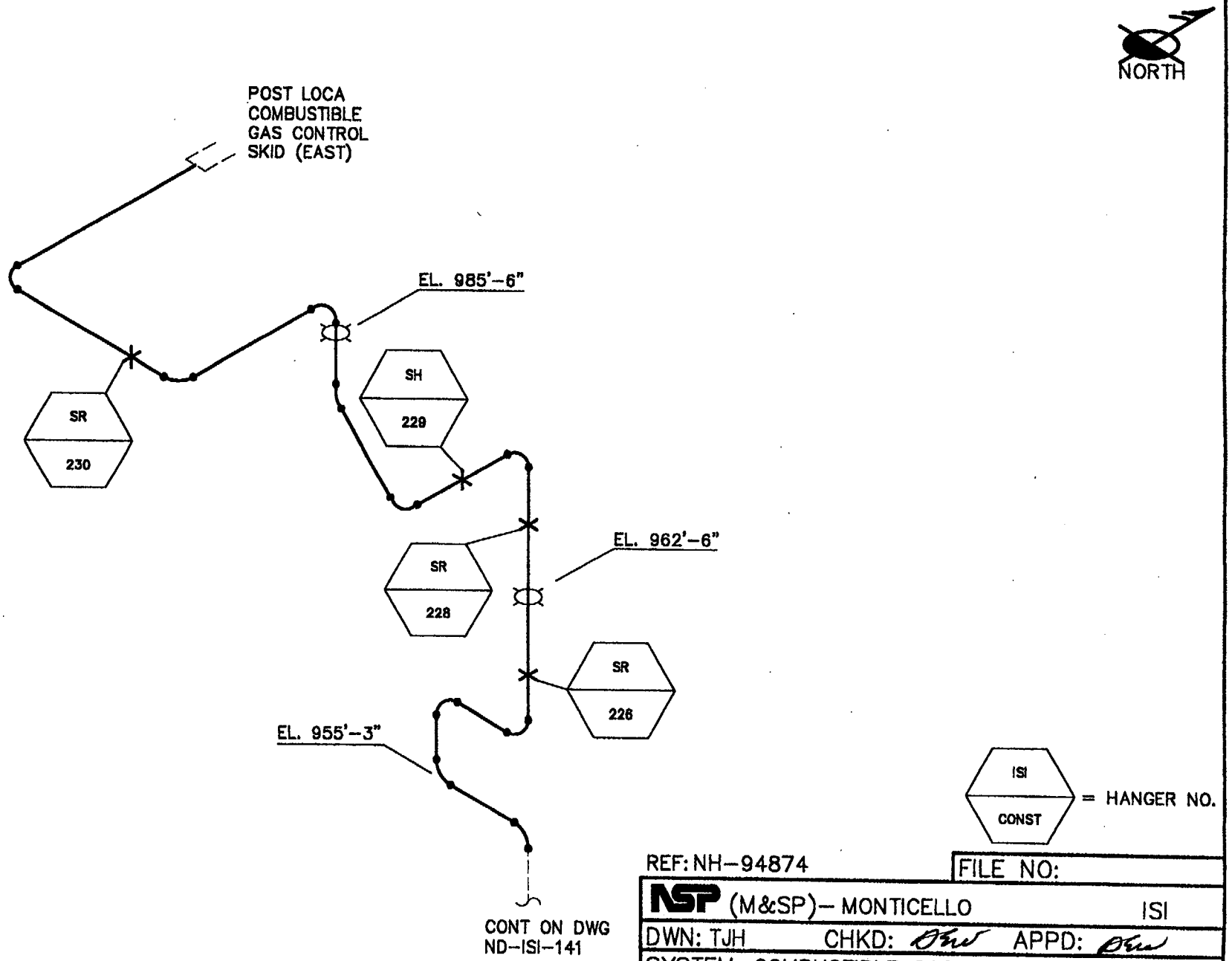

NOTE: LOCATED IN REACTOR BLDG

REF: NH-94874

FILE NO:

NSP (M&SP)- MONTICELLO ISI

DWN: TJH CHKD: APPD:

SYSTEM: COMBUSTIBLE GAS CONTROL

LINE: CGC2A-6"-CA

DWG: ND-ISI-142 REV: 01

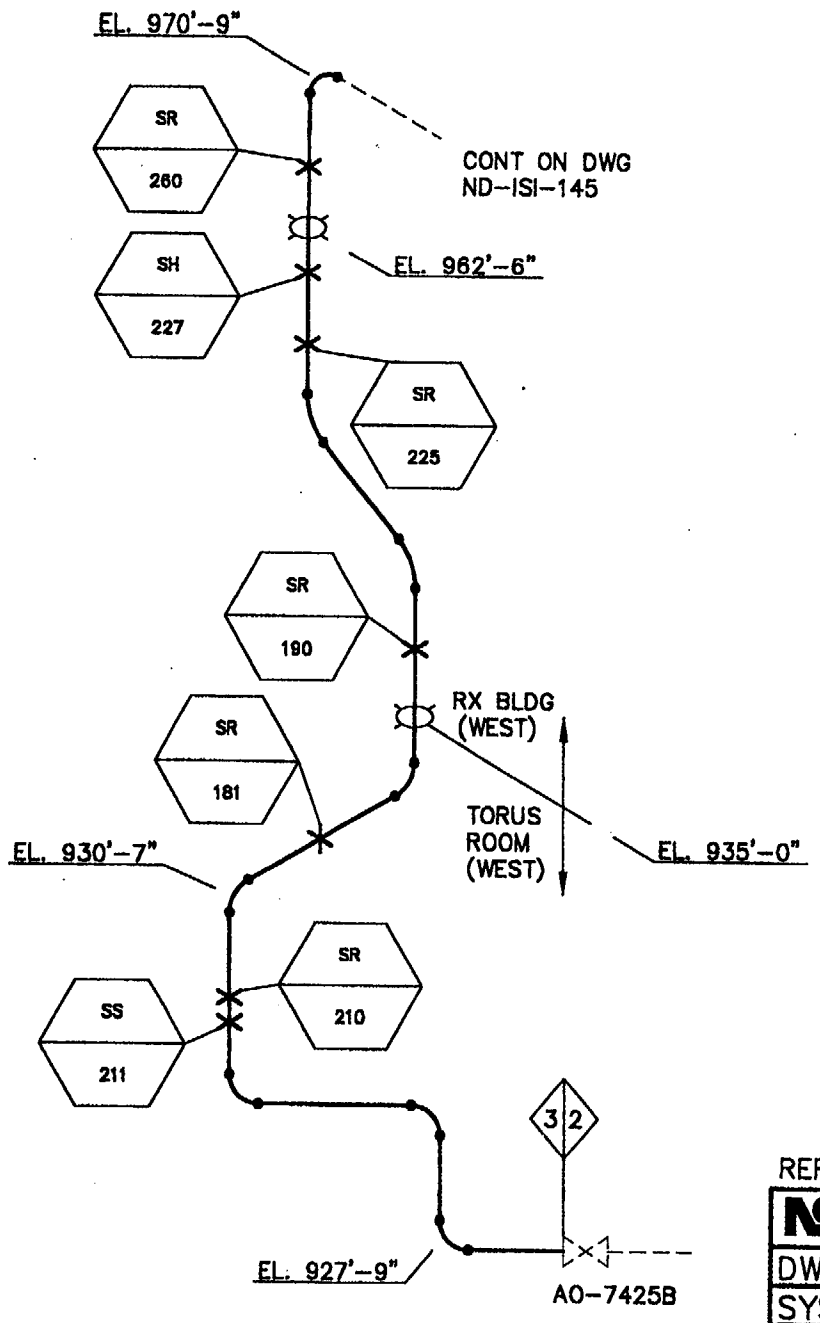

NORTH

ISI / CONST = HANGER NO.

NOTE: LOCATED IN REACTOR BLDG

REF: NH-94873

FILE NO:

NSP (M&SP) – MONTICELLO ISI

DWN: TJH CHKD: APPD:

SYSTEM: COMBUSTIBLE GAS CONTROL

LINE: CGC2B-6"-CA

DWG: ND-ISI-144 REV: 01

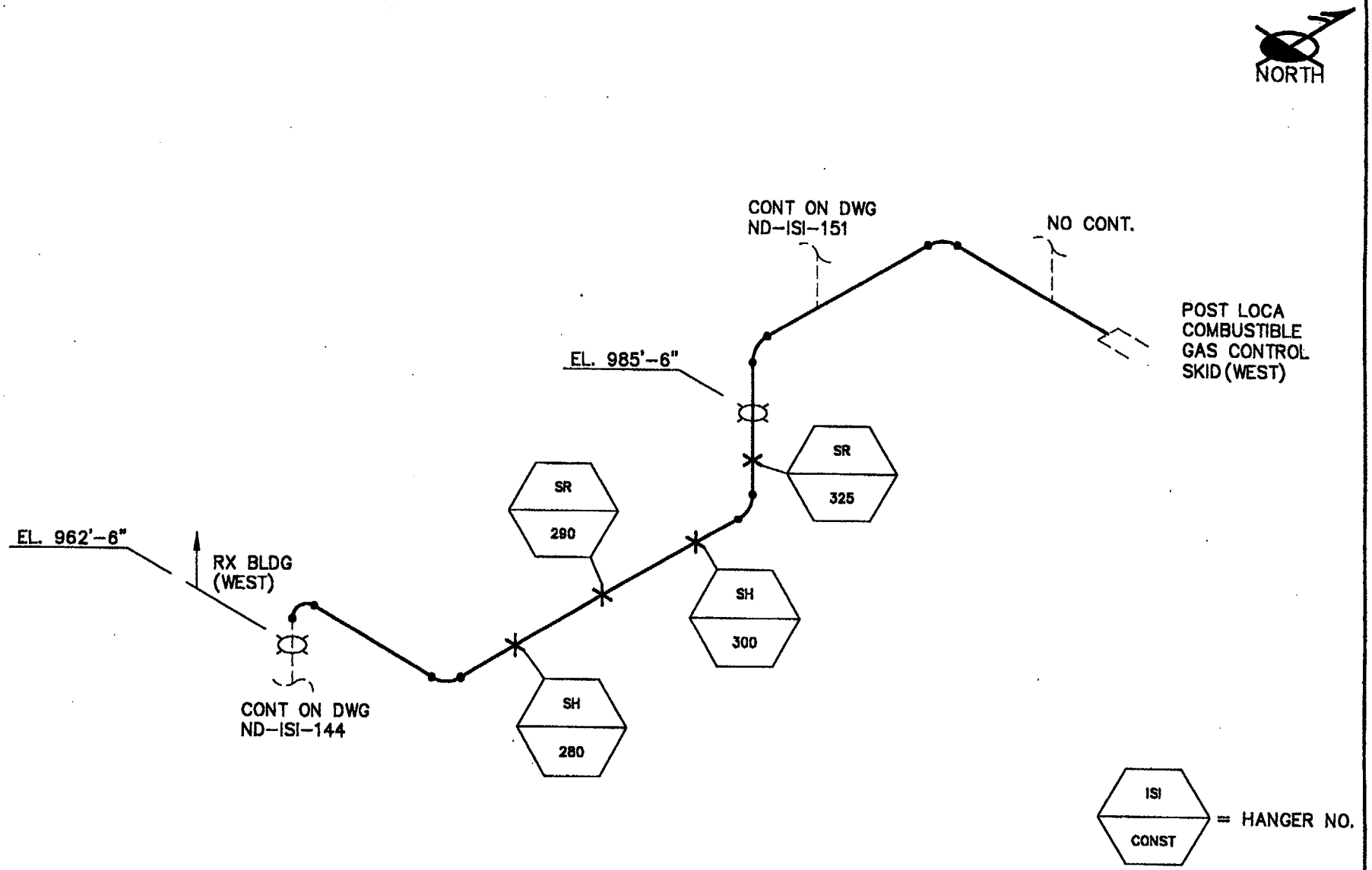

NOTE: LOCATED IN REACTOR BLDG

REF: NH-94873

FILE NO:

NSP (M&SP)- MONTICELLO ISI

DWN: TJH CHKD: APPD:

SYSTEM: COMBUSTIBLE GAS CONTROL

LINE: CGC2B-6"-CA

DWG: ND-ISI-145 REV: 01

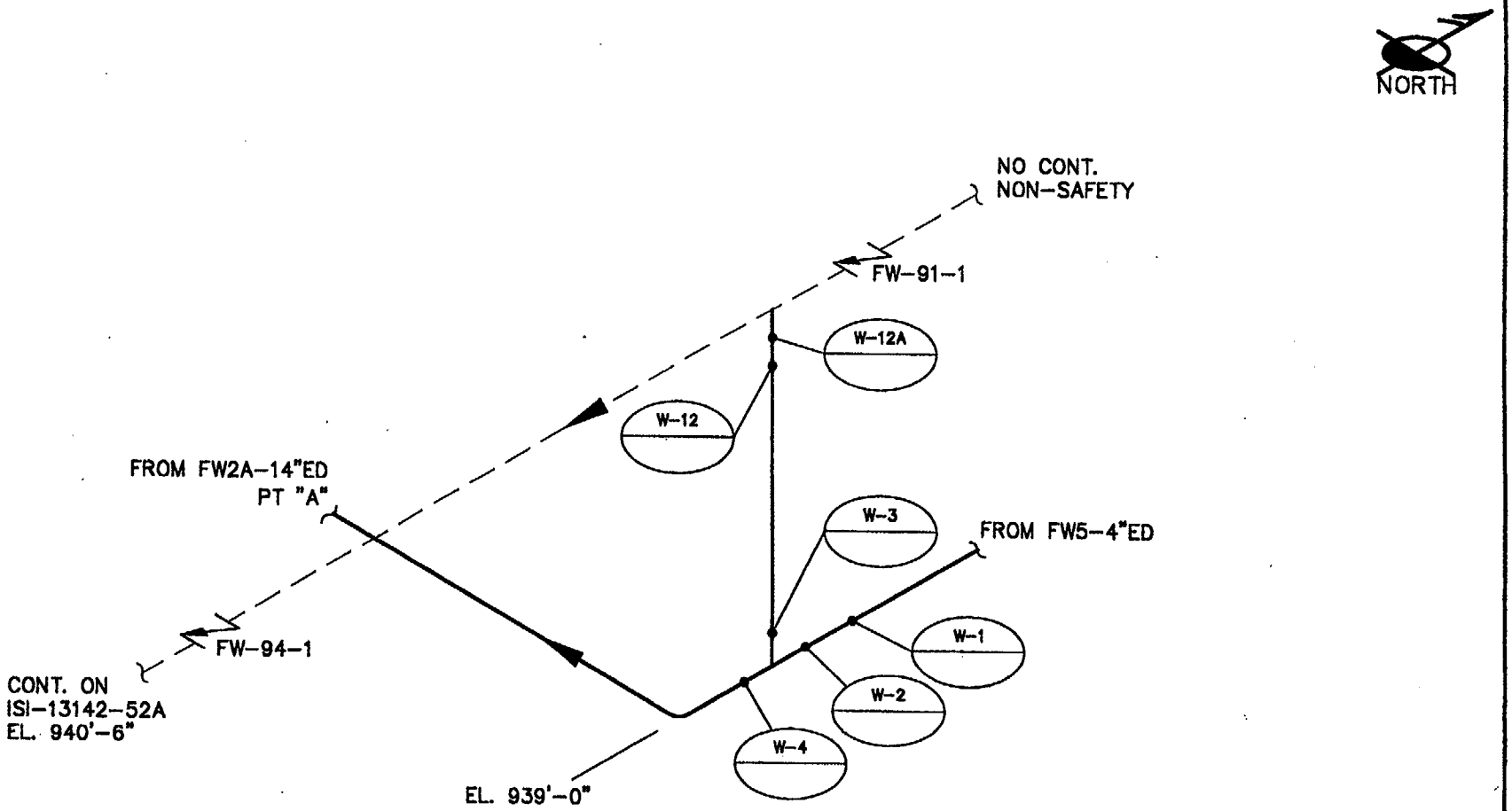

STEAM CHASE

ISI / GE = WELD NO.

REF: NX-13142-30	FILE NO:
NSP (M&SP) – MONTICELLO	ISI
DWN: TJH CHKD: APPD:	
SYSTEM: RCIC FEEDWATER	
LINE:	
DWG: NC-ISI-37	REV: 04

ABOVE CRD REBUILD AREA

NORTH

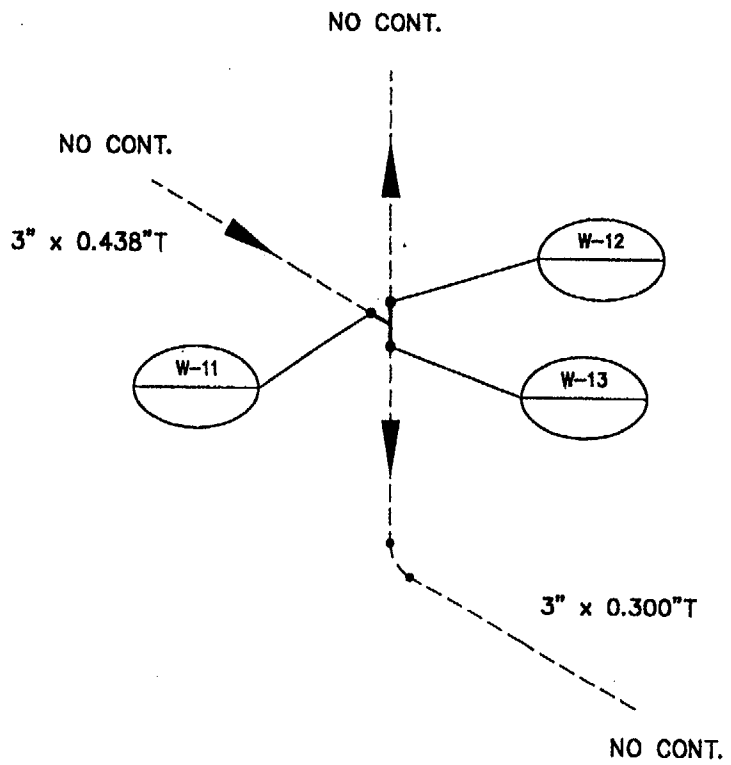

CONTROL ROD DRIVE TO REACTOR WATER CLEANUP

ISI / GE = WELD NO.

REF: NX-13142-51	FILE NO: 31051R01
NSP (M&SP) – MONTICELLO	ISI
DWN: TJH CHKD: APPD:	
SYSTEM: CRD TO RWCU	
LINE:	
DWG: NC-ISI-51	REV: 01

INSPECTION PLAN AND SCHEDULE TABLE

Interval / Period / Outage # / Year

3rd-1-1 1994
3rd-1-2 1996
3rd-2-1 1997
3rd-2-2 1998
3rd-3-1 2000
3rd-3-2 2001

Notes:

1. Components may be rescheduled within the same period. Longitudinal welds are examined with the associated circumferential welds.

2. All applicable hanger and attachment welds (Category B-K-1 and C-C) examinations will be performed on a given hanger at the same time (i.e. F-A,B,C represents all required exams on one hanger).

3. C x.xx are items exempted from inspection per Table IWC-2500-1, Item C 5.50, but are included in the total population.

4. As shown in the schedule columns, "C" indicates inspection completed for Interval and "S" indicates scheduled to be examined, B is a baseline inspection.

Pressure Testing Notes:

A. The system leakage tests described by Section XI, Items B15.10, B15.40, B15.50, B.15.60 and B.15.70 are performed each refueling outage in accordance with Monticello plant procedure 0255-20-IIC-2. Record information of examination results is maintained by the Plant.

B. The system hydrostatic tests described by Section XI, Items B15.11, B.15.41, B.15.51, B.15.61 and B.15.71 are performed at, or near, the end of each Interval in accordance with Monticello plant procedure 0255-20-IIA-2. Record information of examination results is maintained by the Plant.

C. The system functional and leakage tests described by Section XI, Items C7.10, C7.30, C7.50 and C7.70 are performed in accordance with the Monticello plant procedure identified under the procedure columns of the Examination and Schedule table. Record information of examination results is maintained by the Plant.

D. See Code Case N-498.

E. The system hydrostatic tests described by Section XI, Items C7.20, C7.40, C7.60 and C7.80 are performed at, or near, the end of each Interval in accordance with Monticello plant procedure identified under the procedure columns of the Examination and Schedule table. Record information of examination results is maintained by the Plant.

F. The system hydrostatic tests described by Section XI, Items D1.10, D2.10 and D3.10 are performed at, or near, the end of each Interval in accordance with Monticello plant procedure identified under the procedure columns of the Examination and Schedule table. Record information of examination results is maintained by the Plant.

G. The system functional tests described by Section XI, Items D2.10 are performed in accordance with Monticello plant procedure identified under the procedure columns of the Examination and Schedule table. Record information of examination results is maintained by the Plant.

NDE Notes:

AA. Reactor pressure closure studs, Item B6.30, will be examined when removed.

BB. Accessible portion of the reactor vessel welds, Items B1.11 and B1.12, will be examined when the adjacent nozzle is examined.

N-4A and adjacent VCBB-4	1996
N-4B and adjacent VCBB-4	1998
N-4C and adjacent VCBB-4	1994
N-4D and adjacent VCBB-4	1999
N-5A and adjacent VLCB-1	2002
N-5B and adjacent VLCB-2	1994
N-2G and adjacent VLAA-2	1998
N-8B and adjacent VLAA-2	2002
N-8A and adjacent VLAA-1	1994 (not accessible - 9/27/94)
N-1A and adjacent VCBB-1	1994
N-1B and adjacent VCBB-1	2002

CC. Dissimilar metal weld.

DD. Encapsulated weld.

EE. The internal surface visual examination is done during maintenance: Atwood Morril Globe Valve - Main Steam: VT-1 of one valve.

FF. The internal surface visual examination is done during maintenance: Target Rock Relief Valves - Main Steam: VT-1 of one valve.

GG. The internal surface visual examination is done during maintenance: Anchor Check Valves - Feedwater: VT-1 of one valve.

HH. The internal surface visual examination is done during maintenance: Anchor Gate Valves - Various Systems: VT-1 of one valve in each size.

II. The internal surface visual examination is done during maintenance: Chapman Crane Gate Valves - Recirculation System: VT-1 of one valve.

JJ. Welds in core spray and containment spray were added at the end of the second interval per EGG-MS-8969. These same welds are scheduled near the end of the third interval to allow a suitable amount of service time between examinations.

KK. NUREG 0619 Commitments: Monticello visually inspects each feedwater sparger and ultrasonic inspection two of four feedwater nozzles inner radius each refueling outage through Cycle 18 (1998). If ultrasonic examination results in unacceptable indications, then an internal surface examination of the feedwater nozzles shall be performed.

LL. VT-2 inspection of partial penetration nozzle welds is done remotely.

MM. Augmented examination for Generic Letter 87-11, Relaxation in Arbitrary Intermediate Pipe Rupture Requirements (Superpipe - requires 100% volumetric examination once per 10 years).

NN. The Monticello ISI Plan is to be revised, as appropriate, to reflect the performance of an augmented examination of the reactor vessel welds in accordance with 10CFR50.55a(g)(6)(ii)(A), to the maximum extent practical (NSP letter dated 9/19/1996).

MONTICELLO Nuclear Generating Plant
3rd Interval ISI Plan Rev. 3 June 1, 1992 to May 31, 2002

Category, ItemNO, Class	Summary / CompID / System	Scope / Method / Procedure	Iso No. Comp. Desc. Code Case /Note		Period 1				Period 2				Period 3			
					1	2	3	4	1	2	3	4	1	2	3	4
C-H	100003	ISI/VT2/0255-02-IIA-1	1.5-12 Boundary	ISI	-	-	-	-	-	-	-	-	-	-	-	-
C7.20	02-IIA-1		Pressure Test	AUG	-	-	-	-	-	-	-	-	-	-	-	-
2	SBLC		Note: D	OWN	-	-	-	-	-	-	-	-	-	-	-	-
				PRE	-	-	-	-	-	-	-	-	-	-	-	-
C-H	100004	ISI/VT2/0255-02-IIA-2	1.5-12 Boundary	ISI	-	-	-	-	-	-	-	-	-	s	-	-
C7.20	02-IIA-2		Pressure Test	AUG	-	-	-	-	-	-	-	-	-	-	-	-
2	SBLC		Note: D	OWN	-	-	-	-	-	-	-	-	-	-	-	-
				PRE	-	-	-	-	-	-	-	-	-	-	-	-
C-H	100005	ISI/VT2/0255-02-IIB-1	1.5-12 Boundary	ISI	-	c	-	-	-	-	-	-	-	-	-	-
C7.10	02-IIB-1		Pressure Test	AUG	-	-	-	-	-	-	-	-	-	-	-	-
2	SBLC		Note: C	OWN	-	-	-	-	-	-	-	-	-	-	-	-
				PRE	-	-	-	-	-	-	-	-	-	-	-	-
C-H	100006	ISI/VT2/0255-02-IIB-2	1.5-12 Boundary	ISI	-	c	-	-	-	-	-	-	-	-	-	-
C7.10	02-IIB-2		Pressure Test	AUG	-	-	-	-	-	-	-	-	-	-	-	-
2	SBLC		Note: C	OWN	-	-	-	-	-	-	-	-	-	-	-	-
				PRE	-	-	-	-	-	-	-	-	-	-	-	-
C-H	100007	ISI/VT2/0255-03-IIA	1.5-5 Boundary	ISI	-	-	-	-	-	-	-	-	s	-	-	-
C7.20	Core Spray System		Pressure Test	AUG	-	-	-	-	-	-	-	-	-	-	-	-
2	Core Spray		Note: D	OWN	-	-	-	-	-	-	-	-	-	-	-	-
				PRE	-	-	-	-	-	-	-	-	-	-	-	-
C-H	100008	ISI/VT2/0255-03-IIB	1.5-5 Boundary	ISI	c	-	-	-	-	-	-	-	-	-	-	-
C7.10	03-IIB		Pressure Test	AUG	-	-	-	-	-	-	-	-	-	-	-	-
2	Core Spray		Note: C	OWN	-	-	-	-	-	-	-	-	-	-	-	-
				PRE	-	-	-	-	-	-	-	-	-	-	-	-
C-H	100009	ISI/VT2/0255-04-IIA-1	1.5-6 Boundary	ISI	-	-	-	-	-	-	-	-	-	s	-	-
C7.20	04-IIA-1		Pressure Test	AUG	-	-	-	-	-	-	-	-	-	-	-	-
2	RHR A		Note: D	OWN	-	-	-	-	-	-	-	-	-	-	-	-
				PRE	-	-	-	-	-	-	-	-	-	-	-	-
C-H	100010	ISI/VT2/0255-04-IIA-2	1.5-7 Boundary	ISI	-	-	-	-	-	-	-	-	-	s	-	-
C7.20	04-IIA-2		Pressure Test	AUG	-	-	-	-	-	-	-	-	-	-	-	-
2	RHR B		Note: D	OWN	-	-	-	-	-	-	-	-	-	-	-	-
				PRE	-	-	-	-	-	-	-	-	-	-	-	-
C-H	100011	ISI/VT2/0255-04-IIA-3	1.5-6 Boundary	ISI	-	-	-	-	-	-	-	-	-	s	-	-
C7.20	04-IIA-3		Pressure Test	AUG	-	-	-	-	-	-	-	-	-	-	-	-
2	RHR SD Cooling		Note: D	OWN	-	-	-	-	-	-	-	-	-	-	-	-
				PRE	-	-	-	-	-	-	-	-	-	-	-	-
C-H	100013	ISI/VT2/0255-04-IIB-1	1.5-6 Boundary	ISI	c	-	-	-	-	-	-	-	-	-	-	-
C7.10	04-IIB-1		Pressure Test	AUG	-	-	-	-	-	-	-	-	-	-	-	-
2	RHR A		Note: C	OWN	-	-	-	-	-	-	-	-	-	-	-	-
				PRE	-	-	-	-	-	-	-	-	-	-	-	-

MONTICELLO Nuclear Generating Plant
3rd Interval ISI Plan Rev. 3 June 1, 1992 to May 31, 2002

Category, ItemNO, Class	Summary / CompID / System	Scope / Method / Procedure	Iso No. Comp. Desc. Code Case /Note		Period 1				Period 2				Period 3			
					1	2	3	4	1	2	3	4	1	2	3	4
C-H	100014	ISI/VT2/0255-04-IIB-2	1.5-7 Boundary	ISI	c	-	-	-	-	-	-	-	-	-	-	-
C7.10	04-IIB-2		Pressure Test	AUG	-	-	-	-	-	-	-	-	-	-	-	-
2	RHR B		Note: C	OWN	-	-	-	-	-	-	-	-	-	-	-	-
				PRE	-	-	-	-	-	-	-	-	-	-	-	-
C-H	100016	ISI/VT2/0255-04-IIB-3	1.5-6 Boundary	ISI	-	c	-	-	-	-	-	-	-	-	-	-
C7.10	04-IIB-3		Pressure Test	AUG	-	-	-	-	-	-	-	-	-	-	-	-
2	RHR SD Cooling		Note: C	OWN	-	-	-	-	-	-	-	-	-	-	-	-
				PRE	-	-	-	-	-	-	-	-	-	-	-	-
D-B	100017	ISI/VT2/0255-05-11A-1	1.5-16 Boundary	ISI	-	-	-	-	-	-	-	-	s	-	-	-
D2.10	RHR SW Div. I		Pressure Test	AUG	-	-	-	-	-	-	-	-	-	-	-	-
3	RHR SW A		Note: F	OWN	-	-	-	-	-	-	-	-	-	-	-	-
				PRE	-	-	-	-	-	-	-	-	-	-	-	-
D-B	100018	ISI/VT2/0255-05-IIA-2	1.5-16 Boundary	ISI	c	-	-	-	-	-	-	-	-	-	-	-
D2.10	05-IIA-2		Pressure Test	AUG	-	-	-	-	-	-	-	-	-	-	-	-
3	RHR SW B		Note: F	OWN	-	-	-	-	-	-	-	-	-	-	-	-
				PRE	-	-	-	-	-	-	-	-	-	-	-	-
D-B	100019	ISI/VT2/0255-05-IIA-3	1.5-16 Boundary	ISI	-	-	-	-	-	-	-	-	-	-	-	-
D2.10	05-IIA-3		Pressure Test	AUG	-	-	-	-	-	-	-	-	-	-	-	-
3	RHR SW A		Note: F	OWN	-	-	-	-	-	-	-	-	-	-	-	-
				PRE	-	-	-	-	-	-	-	-	-	-	-	-
D-B	100020	ISI/VT/0255-05-11A-4	1.5-16 Boundary	ISI	-	-	-	-	-	c	-	-	b	-	-	-
D2.10	RHR SW Div.II		Pressure Test	AUG	-	-	-	-	-	-	-	-	-	-	-	-
3	RHR SW B		Note: F	OWN	-	-	-	-	-	-	-	-	-	-	-	-
				PRE	-	-	-	-	-	-	-	-	-	-	-	-
D-B	100021	ISI/VT2/0255-05-IIB-1	1.5-16 Boundary	ISI	-	c	-	-	-	-	-	-	-	-	-	-
D2.10	05-IIB-1		Pressure Test	AUG	-	-	-	-	-	-	-	-	-	-	-	-
3	RHR SW A		Note: G	OWN	-	-	-	-	-	-	-	-	-	-	-	-
				PRE	-	-	-	-	-	-	-	-	-	-	-	-
D-B	100022	ISI/VT2/0255-05-IIB-2	1.5-16 Boundary	ISI	-	c	-	-	-	-	-	-	-	-	-	-
D2.10	05-IIB-2		Pressure Test	AUG	-	-	-	-	-	-	-	-	-	-	-	-
3	RHR SW B		Note: G	OWN	-	-	-	-	-	-	-	-	-	-	-	-
				PRE	-	-	-	-	-	-	-	-	-	-	-	-
C-H	100023	ISI/VT2/0255-06-IIA	1.5-8 Boundary	ISI	-	-	-	-	-	-	-	-	-	s	-	-
C7.20	06-IIA		Pressure Test	AUG	-	-	-	-	-	-	-	-	-	-	-	-
2	HPCI		Note: D	OWN	-	-	-	-	-	-	-	-	-	-	-	-
				PRE	-	-	-	-	-	-	-	-	-	-	-	-
C-H	100024	ISI/VT2/0255-06-IIB	1.5-8 Boundary	ISI	c	-	-	-	-	-	-	-	-	-	-	-
C7.10	06-IIB		Pressure Test	AUG	-	-	-	-	-	-	-	-	-	-	-	-
2	HPCI		Note: C	OWN	-	-	-	-	-	-	-	-	-	-	-	-
				PRE	-	-	-	-	-	-	-	-	-	-	-	-

MONTICELLO Nuclear Generating Plant
3rd Interval ISI Plan Rev. 3 June 1, 1992 to May 31, 2002

Category, ItemNO, Class	Summary / CompID / System	Scope / Method / Procedure	Iso No. Comp. Desc. Code Case /Note		Period 1				Period 2				Period 3			
					1	2	3	4	1	2	3	4	1	2	3	4
C-H	100025	ISI/VT2/0255-08-IIA	1.5-10 Boundary	ISI	-	-	-	-	-	-	-	-	-	s	-	-
C7.20	08-IIA		Pressure Test	AUG	-	-	-	-	-	-	-	-	-	-	-	-
2	RCIC		Note: D	OWN	-	-	-	-	-	-	-	-	-	-	-	-
				PRE	-	-	-	-	-	-	-	-	-	-	-	-
C-H	100026	ISI/VT2/0255-08-IIB	1.5-10 Boundary	ISI	c	-	-	-	-	-	-	-	-	-	-	-
C7.10	08-IIB		Pressure Test	AUG	-	-	-	-	-	-	-	-	-	-	-	-
2	RCIC		Note: C	OWN	-	-	-	-	-	-	-	-	-	-	-	-
				PRE	-	-	-	-	-	-	-	-	-	-	-	-
D-B	100027	ISI/VT/0255-11-IIA-1	1.5-14 Boundary	ISI	-	c	-	-	-	-	-	-	b	-	-	-
D2.10	EDG-ESW A Div. I		Pressure Test	AUG	-	-	-	-	-	-	-	-	-	-	-	-
3	EDG-ESW A		Note: E	OWN	-	-	-	-	-	-	-	-	-	-	-	-
				PRE	-	-	-	-	-	-	-	-	-	-	-	-
D-B	100028	ISI/VT/0255-11-IIA-2	1.5-15 Boundary	ISI	c	-	-	-	-	-	-	-	b	-	-	-
D2.10	EDG-ESW B Div. II		Pressure Test	AUG	-	-	-	-	-	-	-	-	-	-	-	-
3	EDG-ESW B		Note: E	OWN	-	-	-	-	-	-	-	-	-	-	-	-
				PRE	-	-	-	-	-	-	-	-	-	-	-	-
D-B	100029	ISI/VT/0255-11-IIA-3	1.5-14 Boundary	ISI	-	-	-	-	-	-	-	-	s	-	-	-
D2.10	ESW A Div. I		Pressure Test	AUG	-	-	-	-	-	-	-	-	-	-	-	-
3	ESW A		Note: E	OWN	-	-	-	-	-	-	-	-	-	-	-	-
				PRE	-	-	-	-	-	-	-	-	-	-	-	-
D-B	100030	ISI/VT2/0255-11-IIA-4	1.5-15 Boundary	ISI	-	-	-	-	-	-	-	-	s	b	-	-
D2.10	ESW B Div. II		Pressure Test	AUG	-	-	-	-	-	-	-	-	-	-	-	-
3	ESW B		Note: E	OWN	-	-	-	-	-	-	-	-	-	-	-	-
				PRE	-	-	-	-	-	-	-	-	-	-	-	-
D-B	100031	ISI/VT2/0255-11-IIB-1	1.5-14 Boundary	ISI	-	c	-	-	-	-	-	-	-	-	-	-
D2.10	11-IIB-1		Pressure Test	AUG	-	-	-	-	-	-	-	-	-	-	-	-
3	EDG-ESW A		Note: G	OWN	-	-	-	-	-	-	-	-	-	-	-	-
				PRE	-	-	-	-	-	-	-	-	-	-	-	-
D-B	100032	ISI/VT2/0255-11-IIB-2	1.5-15 Boundary	ISI	-	c	-	-	-	-	-	-	-	-	-	-
D2.10	11-IIB-2		Pressure Test	AUG	-	-	-	-	-	-	-	-	-	-	-	-
3	EDG-ESW B		Note: G	OWN	-	-	-	-	-	-	-	-	-	-	-	-
				PRE	-	-	-	-	-	-	-	-	-	-	-	-
D-B	100033	ISI/VT2/0255-11-IIB-3	1.5-14 Boundary	ISI	-	c	-	-	-	-	-	-	-	-	-	-
D2.10	11-IIB-3		Pressure Test	AUG	-	-	-	-	-	-	-	-	-	-	-	-
3	ESW A		Note: G	OWN	-	-	-	-	-	-	-	-	-	-	-	-
				PRE	-	-	-	-	-	-	-	-	-	-	-	-
D-B	100034	ISI/VT2/0255-11-IIB-4	1.5-15 Boundary	ISI	-	c	-	-	-	-	-	-	-	-	-	-
D2.10	11-IIB-4		Pressure Test	AUG	-	-	-	-	-	-	-	-	-	-	-	-
3	ESW B		Note: G	OWN	-	-	-	-	-	-	-	-	-	-	-	-
				PRE	-	-	-	-	-	-	-	-	-	-	-	-

MONTICELLO Nuclear Generating Plant
3rd Interval ISI Plan Rev. 3 June 1, 1992 to May 31, 2002

Category, ItemNO, Class	Summary / CompID / System	Scope / Method / Procedure	Iso No. Comp. Desc. Code Case /Note		Period 1				Period 2				Period 3			
					1	2	3	4	1	2	3	4	1	2	3	4
C-H	100035	ISI/VT2/0255-12-IIA-1	1.5-3 Boundary	ISI	-	-	-	-	-	-	-	-	-	s	-	-
C7.20	12-IIA-1		Pressure Test	AUG	-	-	-	-	-	-	-	-	-	-	-	-
2	Feedwater A		Note: D	OWN	-	-	-	-	-	-	-	-	-	-	-	-
				PRE	-	-	-	-	-	-	-	-	-	-	-	-
C-H	100036	ISI/VT2/0255-12-IIA-2	1.5-3 Boundary	ISI	-	-	-	-	-	-	-	-	-	s	-	-
C7.20	12-IIA-2		Pressure Test	AUG	-	-	-	-	-	-	-	-	-	-	-	-
2	Feedwater B		Note: D	OWN	-	-	-	-	-	-	-	-	-	-	-	-
				PRE	-	-	-	-	-	-	-	-	-	-	-	-
C-H	100037	ISI/VT2/0255-12-IIB-1	1.5-3 Boundary	ISI	-	c	-	-	-	-	-	-	-	-	-	-
C7.10	12-IIB-1		Pressure Test	AUG	-	-	-	-	-	-	-	-	-	-	-	-
2	Feedwater A		Note: C	OWN	-	-	-	-	-	-	-	-	-	-	-	-
				PRE	-	-	-	-	-	-	-	-	-	-	-	-
C-H	100038	ISI/VT2/0255-12-IIB-2	1.5-3 Boundary	ISI	-	c	-	-	-	-	-	-	-	-	-	-
C7.10	12-IIB-2		Pressure Test	AUG	-	-	-	-	-	-	-	-	-	-	-	-
2	Feedwater B		Note: C	OWN	-	-	-	-	-	-	-	-	-	-	-	-
				PRE	-	-	-	-	-	-	-	-	-	-	-	-
C-H	100041	ISI/VT/0255-16-IIA-1	1.5-21 Boundary	ISI	-	-	-	-	-	-	-	-	s	-	-	-
C7.20	Drywell Floor Drain		Pressure Test	AUG	-	-	-	-	-	-	-	-	-	-	-	-
2	Drywell Floor Drain		Note: D	OWN	-	-	-	-	-	-	-	-	-	-	-	-
				PRE	-	-	-	-	-	-	-	-	-	-	-	-
C-H	100042	ISI/VT/0255-16-IIA-2	1.5-21 Boundary	ISI	-	-	-	-	-	-	-	-	s	-	-	-
C7.20	Drywell EQT Drain System		Pressure Test	AUG	-	-	-	-	-	-	-	-	-	-	-	-
2	Drywell EQT Drain		Note: D	OWN	-	-	-	-	-	-	-	-	-	-	-	-
				PRE	-	-	-	-	-	-	-	-	-	-	-	-
C-H	100044	ISI/VT2/0255-16-IIB-1	1.5-21 Boundary	ISI	-	c	-	-	-	-	-	-	-	-	-	-
C7.10	16-IIB-1		Pressure Test	AUG	-	-	-	-	-	-	-	-	-	-	-	-
2	Drywell Floor Drain		Note: C	OWN	-	-	-	-	-	-	-	-	-	-	-	-
				PRE	-	-	-	-	-	-	-	-	-	-	-	-
C-H	100046	ISI/VT2/0255-16-IIB-2	1.5-21 Boundary	ISI	-	c	-	-	-	-	-	-	-	-	-	-
C7.10	16-IIB-2		Pressure Test	AUG	-	-	-	-	-	-	-	-	-	-	-	-
2	Drywell EQT Drain		Note: C	OWN	-	-	-	-	-	-	-	-	-	-	-	-
				PRE	-	-	-	-	-	-	-	-	-	-	-	-
B-P	100047	ISI/VT2/0255-20-IIA-2	1.5-4 Boundary	ISI	-	c	-	-	-	-	-	-	b	-	-	-
B15.11	Reactor Coolant		Pressure Test	AUG	-	-	-	-	-	-	-	-	-	-	-	-
1	Reactor Coolant		Note: B	OWN	-	-	-	-	-	-	-	-	-	-	-	-
				PRE	-	-	-	-	-	-	-	-	-	-	-	-
B-P	100048	ISI/VT2/0255-20-IIC-2	1.5-4 Boundary	ISI	c	B	-	-	-	-	-	-	-	b	-	-
B15.10	20-IIC-2		Pressure Test	AUG	-	-	-	-	-	-	-	-	-	-	-	-
1	Reactor Coolant		Note: A	OWN	-	-	-	-	-	-	-	-	-	-	-	-
				PRE	-	-	-	-	-	-	-	-	-	-	-	-

MONTICELLO Nuclear Generating Plant
3rd Interval ISI Plan Rev. 3 June 1, 1992 to May 31, 2002

Category, ItemNO, Class	Summary / CompID / System	Scope / Method / Procedure	Iso No. Comp. Desc. Code Case /Note		Period 1				Period 2				Period 3			
					1	2	3	4	1	2	3	4	1	2	3	4
D-B	100049	ISI/VT2/0255-21-IIA	1.5-24 Boundary	ISI	-	-	-	-	-	-	-	-	-	s	-	-
D2.10	21-IIA,IID-1		Pressure Test	AUG	-	-	-	-	-	-	-	-	-	-	-	-
3	CGCS A		Note: E,F	OWN	-	-	-	-	-	-	-	-	-	-	-	-
				PRE	-	-	-	-	-	-	-	-	-	-	-	-
D-B	100050	ISI/VT2/0255-21-IIA	1.5-25 Boundary	ISI	-	-	-	-	-	-	-	-	-	s	-	-
D2.10	21-IIA,IID-2		Pressure Test	AUG	-	-	-	-	-	-	-	-	-	-	-	-
3	CGCS B		Note: E,F	OWN	-	-	-	-	-	-	-	-	-	-	-	-
				PRE	-	-	-	-	-	-	-	-	-	-	-	-
D-B	100051	ISI/VT2/0255-21-IIB-1	1.5-24 Boundary	ISI	-	c	-	-	-	-	-	-	-	-	-	-
D2.10	21-IIB-1,3		Pressure Test	AUG	-	-	-	-	-	-	-	-	-	-	-	-
3	CGCS A		Note: C,G	OWN	-	-	-	-	-	-	-	-	-	-	-	-
				PRE	-	-	-	-	-	-	-	-	-	-	-	-
D-B	100052	ISI/VT2/0255-21-IIB-2	1.5-25 Boundary	ISI	-	c	-	-	-	-	-	-	-	-	-	-
D2.10	21-IIB-2,4		Pressure Test	AUG	-	-	-	-	-	-	-	-	-	-	-	-
3	CGCS B		Note: C,G	OWN	-	-	-	-	-	-	-	-	-	-	-	-
				PRE	-	-	-	-	-	-	-	-	-	-	-	-
C-F-2	100054		ISI-13142-17-A	ISI	-	-	-	-	-	-	-	-	-	-	-	-
C5.51	W- 2		Valve-to-Reducer	AUG	-	-	-	-	-	-	-	-	-	-	-	-
2	RHR Suction A			OWN	-	-	-	-	-	-	-	-	-	-	-	-
				PRE	-	-	-	-	-	-	-	-	-	-	-	-
C-F-2	100055		ISI-13142-42-A	ISI	-	-	-	-	-	-	-	-	-	-	-	-
C5.51	W-26		Elbow-to-Pipe	AUG	-	-	-	-	-	-	-	-	-	-	-	-
2	HPCI Steam			OWN	-	-	-	-	-	-	-	-	-	-	-	-
				PRE	-	-	-	-	-	-	-	-	-	-	-	-
F-C	100056	ISI/VT/ISI-VT-2.0	ISI-13142-17-A	ISI	-	-	-	-	-	-	-	-	s	-	-	-
F-A,B,C	H- 1		Strut / Clamp	AUG	-	-	-	-	-	-	-	-	-	-	-	-
2	RHR Suction A			OWN	-	-	-	-	-	-	-	-	-	-	-	-
				PRE	-	-	-	-	-	-	-	-	-	-	-	-
F-B	100057	ISI/VT/ISI-VT-2.0	ISI-13142-17-A	ISI	c	-	-	-	-	-	-	-	-	-	-	-
F-A,B,C	H- 2		Slide / Clamp	AUG	-	-	-	-	-	-	-	-	-	-	-	-
2	RHR Suction A			OWN	-	-	-	-	-	-	-	-	-	-	-	-
				PRE	-	-	-	-	-	-	-	-	-	-	-	-
F-B	100058		ISI-13142-17-A	ISI	-	-	-	-	-	-	-	-	-	-	-	-
F-A,B,C	H- 3		Slide Pipe	AUG	-	-	-	-	-	-	-	-	-	-	-	-
2	RHR Suction A			OWN	-	-	-	-	-	-	-	-	-	-	-	-
				PRE	-	-	-	-	-	-	-	-	-	-	-	-
F-B	100059		ISI-13142-17-A	ISI	-	-	-	-	-	-	-	-	-	-	-	-
F-A,B,C	H- 4		Strut / Clamp	AUG	-	-	-	-	-	-	-	-	-	-	-	-
2	RHR Suction A			OWN	-	-	-	-	-	-	-	-	-	-	-	-
				PRE	-	-	-	-	-	-	-	-	-	-	-	-

MONTICELLO Nuclear Generating Plant
3rd Interval ISI Plan Rev. 3 June 1, 1992 to May 31, 2002

Category, ItemNO, Class	Summary / CompID / System	Scope / Method / Procedure	Iso No. Comp. Desc. Code Case /Note		Period 1				Period 2				Period 3			
					1	2	3	4	1	2	3	4	1	2	3	4
C-C	100060	ISI/MT/ISI-MT-1	ISI-13142-17-A	ISI	-	c	-	-	-	-	-	-	-	-	-	-
C3.20	H- 5	ISI/VT/ISI-VT-2.0	Dbl Spr / Half Clamp	AUG	-	-	-	-	-	-	-	-	-	-	-	-
2	RHR Suction A			OWN	-	-	-	-	-	-	-	-	-	-	-	-
				PRE	-	-	-	-	-	-	-	-	-	-	-	-
C-C	100062	ISI/MT/ISI-VT-2.0	ISI-13142-17-A	ISI	-	c	-	-	-	-	-	-	-	-	-	-
C3.20	H- 6	ISI/VT/ISI-VT-2.0	Dbl Spr / Half Clamp	AUG	-	-	-	-	-	-	-	-	-	-	-	-
2	RHR Suction A			OWN	-	-	-	-	-	-	-	-	-	-	-	-
				PRE	-	-	-	-	-	-	-	-	-	-	-	-
F-C	100064	ISI/VT/ISI-VT-2.0	ISI-13142-17-A	ISI	-	-	-	-	-	-	-	-	-	s	-	-
F-A,B,C	H- 7		Spring / Clamp	AUG	-	-	-	-	-	-	-	-	-	-	-	-
2	RHR Suction A			OWN	-	-	-	-	-	-	-	-	-	-	-	-
				PRE	-	-	-	-	-	-	-	-	-	-	-	-
F-B	100065	ISI/VT/ISI-VT-2.0	ISI-13142-17-A	ISI	-	-	-	-	-	-	-	-	-	s	-	-
F-A,B,C	H- 8		Slide	AUG	-	-	-	-	-	-	-	-	-	-	-	-
2	RHR Suction A			OWN	-	-	-	-	-	-	-	-	-	-	-	-
				PRE	-	-	-	-	-	-	-	-	-	-	-	-
F-B	100066	ISI/VT/ISI-VT-2.0	ISI-13142-17-A	ISI	c	-	-	-	-	-	-	-	-	-	-	-
F-A,B,C	H- 9		Slide	AUG	-	-	-	-	-	-	-	-	-	-	-	-
2	RHR Suction A			OWN	-	-	-	-	-	-	-	-	-	-	-	-
				PRE	-	-	-	-	-	-	-	-	-	-	-	-
C-F-2	100067		ISI-13142-17-A	ISI	-	-	-	-	-	-	-	-	-	-	-	-
C5.51	W- 1		Pipe-to-Valve	AUG	-	-	-	-	-	-	-	-	-	-	-	-
2	RHR Suction A			OWN	-	-	-	-	-	-	-	-	-	-	-	-
				PRE	-	-	-	-	-	-	-	-	-	-	-	-
C-F-2	100068	ISI/MT/ISI-MT-1	ISI-13142-17-A	ISI	-	-	-	-	-	-	-	-	s	-	-	-
C5.51	W- 3	ISI/UT/ISI-UT-1	Reducer-to-Tee	AUG	-	-	-	-	-	-	-	-	-	-	-	-
2	RHR Suction A			OWN	-	-	-	-	-	-	-	-	-	-	-	-
				PRE	-	-	-	-	-	-	-	-	-	-	-	-
C-F-2	100069		ISI-13142-17-A	ISI	-	-	-	-	-	-	-	-	-	-	-	-
C5.51	W- 4		Tee-to-Pipe	AUG	-	-	-	-	-	-	-	-	-	-	-	-
2	RHR Suction A			OWN	-	-	-	-	-	-	-	-	-	-	-	-
				PRE	-	-	-	-	-	-	-	-	-	-	-	-
C-F-2	100070		ISI-13142-17-A	ISI	c	-	-	-	-	-	-	-	-	-	-	-
C5.81	W- 5		Pipe-to-Weldolet	AUG	-	-	-	-	-	-	-	-	-	-	-	-
2	RHR Suction A			OWN	-	-	-	-	-	-	-	-	-	-	-	-
				PRE	-	-	-	-	-	-	-	-	-	-	-	-
C-F-2	100071		ISI-13142-17-A	ISI	-	-	-	-	-	-	-	-	-	-	-	-
C5.81	W- 6		Pipe-to-Weldolet	AUG	-	-	-	-	-	-	-	-	-	-	-	-
2	RHR Suction A			OWN	-	-	-	-	-	-	-	-	-	-	-	-
				PRE	-	-	-	-	-	-	-	-	-	-	-	-

MONTICELLO Nuclear Generating Plant
3rd Interval ISI Plan Rev. 3 June 1, 1992 to May 31, 2002

Category, ItemNO, Class	Summary / CompID / System	Scope / Method / Procedure	Iso No. Comp. Desc. Code Case /Note		Period 1				Period 2				Period 3			
					1	2	3	4	1	2	3	4	1	2	3	4
C-F-2	100072		ISI-13142-17-A	ISI	-	-	-	-	-	-	-	-	-	-	-	-
C5.81	W- 7		Pipe-to-Weldolet	AUG	-	-	-	-	-	-	-	-	-	-	-	-
2	RHR Suction A			OWN	-	-	-	-	-	-	-	-	-	-	-	-
				PRE	-	-	-	-	-	-	-	-	-	-	-	-
C-F-2	100073		ISI-13142-17-A	ISI	-	-	-	-	-	-	-	-	-	-	-	-
C5.51	W- 8		Pipe-to-Cap	AUG	-	-	-	-	-	-	-	-	-	-	-	-
2	RHR Suction A			OWN	-	-	-	-	-	-	-	-	-	-	-	-
				PRE	-	-	-	-	-	-	-	-	-	-	-	-
C-F-2	100074		ISI-13142-17-A	ISI	-	-	-	-	-	-	-	-	-	-	-	-
C5.51	W- 9		Weldolet-to-Pipe	AUG	-	-	-	-	-	-	-	-	-	-	-	-
2	RHR Suction A			OWN	-	-	-	-	-	-	-	-	-	-	-	-
				PRE	-	-	-	-	-	-	-	-	-	-	-	-
C-F-2	100075		ISI-13142-17-A	ISI	-	-	-	-	-	-	-	-	-	-	-	-
C5.51	W-10		Pipe-to-Pipe	AUG	-	-	-	-	-	-	-	-	-	-	-	-
2	RHR Suction A			OWN	-	-	-	-	-	-	-	-	-	-	-	-
				PRE	-	-	-	-	-	-	-	-	-	-	-	-
C-F-2	100076		ISI-13142-17-A	ISI	-	-	-	-	-	-	-	-	-	-	-	-
C5.51	W-11		Pipe-to-Pipe	AUG	-	-	-	-	-	-	-	-	-	-	-	-
2	RHR Suction A			OWN	-	-	-	-	-	-	-	-	-	-	-	-
				PRE	-	-	-	-	-	-	-	-	-	-	-	-
C-F-2	100077	ISI/MT/ISI-MT-1	ISI-13142-17-A	ISI	-	c	-	-	-	B	-	-	-	-	-	-
C5.51	W-12	ISI/UT/ISI-UT-1	Pipe-to-Valve	AUG	-	-	-	-	-	-	-	-	-	-	-	-
2	RHR Suction A			OWN	-	-	-	-	-	-	-	-	-	-	-	-
				PRE	-	-	-	-	-	-	-	-	-	-	-	-
C-F-2	100078		ISI-13142-17-A	ISI	-	-	-	-	-	-	-	-	-	-	-	-
C5.51	W-13		Valve-to-Elbow	AUG	-	-	-	-	-	-	-	-	-	-	-	-
2	RHR Suction A			OWN	-	-	-	-	-	-	-	-	-	-	-	-
				PRE	-	-	-	-	-	-	-	-	-	-	-	-
C-F-2	100079	ISI/MT/ISI-MT-1	ISI-13142-17-A	ISI	c	-	-	-	-	-	-	-	-	-	-	-
C5.51	W-14	ISI/UT/ISI-UT-1	Elbow-to-Elbow	AUG	-	-	-	-	-	-	-	-	-	-	-	-
2	RHR Suction A			OWN	-	-	-	-	-	-	-	-	-	-	-	-
				PRE	-	-	-	-	-	-	-	-	-	-	-	-
C-F-2	100080		ISI-13142-17-A	ISI	-	-	-	-	-	-	-	-	-	-	-	-
C5.51	W-15		Elbow-to-Pump	AUG	-	-	-	-	-	-	-	-	-	-	-	-
2	RHR Suction A			OWN	-	-	-	-	-	-	-	-	-	-	-	-
				PRE	-	-	-	-	-	-	-	-	-	-	-	-
C-F-2	100081		ISI-13142-17-A	ISI	-	-	-	-	-	-	-	-	-	-	-	-
C5.51	W-16		Weldolet-to-Pipe	AUG	-	-	-	-	-	-	-	-	-	-	-	-
2	RHR Suction A			OWN	-	-	-	-	-	-	-	-	-	-	-	-
				PRE	-	-	-	-	-	-	-	-	-	-	-	-

MONTICELLO Nuclear Generating Plant
3rd Interval ISI Plan Rev. 3 June 1, 1992 to May 31, 2002

Category, ItemNO, Class	Summary / CompID / System	Scope / Method / Procedure	Iso No. Comp. Desc. Code Case /Note		Period 1				Period 2				Period 3			
					1	2	3	4	1	2	3	4	1	2	3	4
C-F-2	100082		ISI-13142-17-A	ISI	-	-	-	-	-	-	-	-	-	-	-	-
C5.51	W-17		Pipe-to-Pipe	AUG	-	-	-	-	-	-	-	-	-	-	-	-
2	RHR Suction A			OWN	-	-	-	-	-	-	-	-	-	-	-	-
				PRE	-	-	-	-	-	-	-	-	-	-	-	-
C-F-2	100083		ISI-13142-17-A	ISI	-	-	-	-	-	-	-	-	-	-	-	-
C5.51	W-18		Pipe-to-Pipe	AUG	-	-	-	-	-	-	-	-	-	-	-	-
2	RHR Suction A			OWN	-	-	-	-	-	-	-	-	-	-	-	-
				PRE	-	-	-	-	-	-	-	-	-	-	-	-
C-F-2	100084		ISI-13142-17-A	ISI	-	-	-	-	-	-	-	-	-	-	-	-
C5.51	W-19		Pipe-to-Valve	AUG	-	-	-	-	-	-	-	-	-	-	-	-
2	RHR Suction A			OWN	-	-	-	-	-	-	-	-	-	-	-	-
				PRE	-	-	-	-	-	-	-	-	-	-	-	-
C-F-2	100085		ISI-13142-17-A	ISI	-	-	-	-	-	-	-	-	-	-	-	-
C5.51	W-20		Valve-to-Elbow	AUG	-	-	-	-	-	-	-	-	-	-	-	-
2	RHR Suction A			OWN	-	-	-	-	-	-	-	-	-	-	-	-
				PRE	-	-	-	-	-	-	-	-	-	-	-	-
C-F-2	100086		ISI-13142-17-A	ISI	-	-	-	-	-	-	-	-	-	-	-	-
C5.51	W-21		Elbow-to-Elbow	AUG	-	-	-	-	-	-	-	-	-	-	-	-
2	RHR Suction A			OWN	-	-	-	-	-	-	-	-	-	-	-	-
				PRE	-	-	-	-	-	-	-	-	-	-	-	-
C-F-2	100087		ISI-13142-17-A	ISI	-	-	-	-	-	-	-	-	-	-	-	-
C5.51	W-22		Elbow-to-Pump	AUG	-	-	-	-	-	-	-	-	-	-	-	-
2	RHR Suction A			OWN	-	-	-	-	-	-	-	-	-	-	-	-
				PRE	-	-	-	-	-	-	-	-	-	-	-	-
C-F-2	100088		ISI-13142-17-A	ISI	-	-	-	-	-	-	-	-	-	-	-	-
C5.51	W-23		Tee-to-Pipe	AUG	-	-	-	-	-	-	-	-	-	-	-	-
2	RHR Suction A			OWN	-	-	-	-	-	-	-	-	-	-	-	-
				PRE	-	-	-	-	-	-	-	-	-	-	-	-
C-F-2	100089		ISI-13142-17-A	ISI	-	-	-	-	-	-	-	-	-	-	-	-
C5.51	W-24		Pipe-to-Elbow	AUG	-	-	-	-	-	-	-	-	-	-	-	-
2	RHR Suction A			OWN	-	-	-	-	-	-	-	-	-	-	-	-
				PRE	-	-	-	-	-	-	-	-	-	-	-	-
C-F-2	100090		ISI-13142-17-A	ISI	-	-	-	-	-	-	-	-	-	-	-	-
C5.51	W-25		Elbow-to-Pipe	AUG	-	-	-	-	-	-	-	-	-	-	-	-
2	RHR Suction A			OWN	-	-	-	-	-	-	-	-	-	-	-	-
				PRE	-	-	-	-	-	-	-	-	-	-	-	-
C-F-2	100091		ISI-13142-17-A	ISI	-	-	-	-	-	-	-	-	-	-	-	-
C5.51	W-26		Pipe-to-Elbow	AUG	-	-	-	-	-	-	-	-	-	-	-	-
2	RHR Suction A			OWN	-	-	-	-	-	-	-	-	-	-	-	-
				PRE	-	-	-	-	-	-	-	-	-	-	-	-

MONTICELLO Nuclear Generating Plant
3rd Interval ISI Plan Rev. 3 June 1, 1992 to May 31, 2002

Category, ItemNO, Class	Summary / CompID / System	Scope / Method / Procedure	Iso No. Comp. Desc. Code Case /Note		Period 1				Period 2				Period 3			
					1	2	3	4	1	2	3	4	1	2	3	4
C-F-2	100092		ISI-13142-17-A	ISI	-	-	-	-	-	-	-	-	-	-	-	-
C5.51	W-27		Elbow-to-Pipe	AUG	-	-	-	-	-	-	-	-	-	-	-	-
2	RHR Suction A			OWN	-	-	-	-	-	-	-	-	-	-	-	-
				PRE	-	-	-	-	-	-	-	-	-	-	-	-
C-F-2	100093		ISI-13142-17-A	ISI	-	-	-	-	-	-	-	-	-	-	-	-
C5.51	W-28		Pipe-to-Elbow	AUG	-	-	-	-	-	-	-	-	-	-	-	-
2	RHR Suction A			OWN	-	-	-	-	-	-	-	-	-	-	-	-
				PRE	-	-	-	-	-	-	-	-	-	-	-	-
C-F-2	100094		ISI-13142-17-A	ISI	-	-	-	-	-	-	-	-	-	-	-	-
C5.51	W-29		Elbow-to-Pipe	AUG	-	-	-	-	-	-	-	-	-	-	-	-
2	RHR Suction A			OWN	-	-	-	-	-	-	-	-	-	-	-	-
				PRE	-	-	-	-	-	-	-	-	-	-	-	-
C-F-2	100095		ISI-13142-17-A	ISI	-	-	-	-	-	-	-	-	-	-	-	-
C5.51	W-30		Pipe-to-Valve	AUG	-	-	-	-	-	-	-	-	-	-	-	-
2	RHR Suction A			OWN	-	-	-	-	-	-	-	-	-	-	-	-
				PRE	-	-	-	-	-	-	-	-	-	-	-	-
C-F-2	100096		ISI-13142-17-A	ISI	-	-	-	-	-	-	-	-	-	-	-	-
C5.51	W-31		Valve-to-Weldolet	AUG	-	-	-	-	-	-	-	-	-	-	-	-
2	RHR Suction A			OWN	-	-	-	-	-	-	-	-	-	-	-	-
				PRE	-	-	-	-	-	-	-	-	-	-	-	-
C-F-2	100097		ISI-13142-17-A	ISI	-	-	-	-	-	-	-	-	-	-	-	-
C5.51	W-32		Valve-to-Tee	AUG	-	-	-	-	-	-	-	-	-	-	-	-
2	RHR Suction A			OWN	-	-	-	-	-	-	-	-	-	-	-	-
				PRE	-	-	-	-	-	-	-	-	-	-	-	-
F-C	100098		ISI-13142-17-B	ISI	-	-	-	-	-	-	-	-	-	-	-	-
F-A,B,C	H- 1		Rod / Clevis	AUG	-	-	-	-	-	-	-	-	-	-	-	-
2	HPCI Water Side Sctn			OWN	-	-	-	-	-	-	-	-	-	-	-	-
				PRE	-	-	-	-	-	-	-	-	-	-	-	-
F-C	100099		ISI-13142-17-B	ISI	-	-	-	-	-	-	-	-	-	-	-	-
F-A,B,C	H- 2		Dbl Spring / Clamp	AUG	-	-	-	-	-	-	-	-	-	-	-	-
2	HPCI Water Side Sctn			OWN	-	-	-	-	-	-	-	-	-	-	-	-
				PRE	-	-	-	-	-	-	-	-	-	-	-	-
F-B	100100	ISI/VT/ISI-VT-2.0	ISI-13142-17-B	ISI	-	-	-	-	-	-	-	-	s	-	-	-
F-A,B,C	H- 3		Restraint	AUG	-	-	-	-	-	-	-	-	-	-	-	-
2	HPCI Water Side Sctn			OWN	-	-	-	-	-	-	-	-	-	-	-	-
				PRE	-	-	-	-	-	-	-	-	-	-	-	-
F-B	100101	ISI/VT/ISI-VT-2.0	ISI-13142-17-B	ISI	-	-	-	-	-	-	-	-	s	-	-	-
F-A,B,C	H- 4		Restraint	AUG	-	-	-	-	-	-	-	-	-	-	-	-
2	HPCI Water Side Sctn			OWN	-	-	-	-	-	-	-	-	-	-	-	-
				PRE	-	-	-	-	-	-	-	-	-	-	-	-

MONTICELLO Nuclear Generating Plant
3rd Interval ISI Plan Rev. 3 June 1, 1992 to May 31, 2002

Category, ItemNO, Class	Summary / CompID / System	Scope / Method / Procedure	Iso No. Comp. Desc. Code Case /Note		Period 1				Period 2				Period 3			
					1	2	3	4	1	2	3	4	1	2	3	4
C-F-2	100102		ISI-13142-17-B	ISI	-	-	-	-	-	-	-	-	-	-	-	-
C5.51	W- 1		Tee-to-Pipe	AUG	-	-	-	-	-	-	-	-	-	-	-	-
2	HPCI Water Side Sctn			OWN	-	-	-	-	-	-	-	-	-	-	-	-
				PRE	-	-	-	-	-	-	-	-	-	-	-	-
C-F-2	100103		ISI-13142-17-B	ISI	-	-	-	-	-	-	-	-	-	-	-	-
C5.51	W- 2		Pipe-to-Elbow	AUG	-	-	-	-	-	-	-	-	-	-	-	-
2	HPCI Water Side Sctn			OWN	-	-	-	-	-	-	-	-	-	-	-	-
				PRE	-	-	-	-	-	-	-	-	-	-	-	-
C-F-2	100104		ISI-13142-17-B	ISI	-	-	-	-	-	-	-	-	-	-	-	-
C5.51	W- 3		Elbow-to-Pipe	AUG	-	-	-	-	-	-	-	-	-	-	-	-
2	HPCI Water Side Sctn			OWN	-	-	-	-	-	-	-	-	-	-	-	-
				PRE	-	-	-	-	-	-	-	-	-	-	-	-
C-F-2	100105		ISI-13142-17-B	ISI	-	-	-	-	-	-	-	-	-	-	-	-
C5.51	W- 4		Pipe-to-Valve	AUG	-	-	-	-	-	-	-	-	-	-	-	-
2	HPCI Water Side Sctn			OWN	-	-	-	-	-	-	-	-	-	-	-	-
				PRE	-	-	-	-	-	-	-	-	-	-	-	-
C-F-2	100106		ISI-13142-17-B	ISI	-	-	-	-	-	-	-	-	-	-	-	-
C5.51	W- 5		Valve-to-Pipe	AUG	-	-	-	-	-	-	-	-	-	-	-	-
2	HPCI Water Side Sctn			OWN	-	-	-	-	-	-	-	-	-	-	-	-
				PRE	-	-	-	-	-	-	-	-	-	-	-	-
C-F-2	100107		ISI-13142-17-B	ISI	-	-	-	-	-	-	-	-	-	-	-	-
C5.51	W- 6		Pipe-to-Elbow	AUG	-	-	-	-	-	-	-	-	-	-	-	-
2	HPCI Water Side Sctn			OWN	-	-	-	-	-	-	-	-	-	-	-	-
				PRE	-	-	-	-	-	-	-	-	-	-	-	-
C-F-2	100108		ISI-13142-17-B	ISI	-	-	-	-	-	-	-	-	-	-	-	-
C5.51	W- 7		Elbow-to-Pipe	AUG	-	-	-	-	-	-	-	-	-	-	-	-
2	HPCI Water Side Sctn			OWN	-	-	-	-	-	-	-	-	-	-	-	-
				PRE	-	-	-	-	-	-	-	-	-	-	-	-
C-F-2	100109	ISI/MT/ISI-MT-1	ISI-13142-17-B	ISI	-	c	-	-	-	-	-	-	-	-	-	-
C5.51	W- 8	ISI/UT/ISI-UT-1	Pipe-to-Elbow	AUG	-	-	-	-	-	-	-	-	-	-	-	-
2	HPCI Water Side Sctn			OWN	-	-	-	-	-	-	-	-	-	-	-	-
				PRE	-	-	-	-	-	-	-	-	-	-	-	-
C-F-2	100110		ISI-13142-17-B	ISI	-	-	-	-	-	-	-	-	-	-	-	-
C5.51	W- 9		Elbow-to-Pipe	AUG	-	-	-	-	-	-	-	-	-	-	-	-
2	HPCI Water Side Sctn			OWN	-	-	-	-	-	-	-	-	-	-	-	-
				PRE	-	-	-	-	-	-	-	-	-	-	-	-
C-F-2	100111		ISI-13142-17-B	ISI	-	-	-	-	-	-	-	-	-	-	-	-
C5.51	W-10		Pipe-to-Valve	AUG	-	-	-	-	-	-	-	-	-	-	-	-
2	HPCI Water Side Sctn			OWN	-	-	-	-	-	-	-	-	-	-	-	-
				PRE	-	-	-	-	-	-	-	-	-	-	-	-

MONTICELLO Nuclear Generating Plant
3rd Interval ISI Plan Rev. 3 June 1, 1992 to May 31, 2002

Category, ItemNO, Class	Summary / CompID / System	Scope / Method / Procedure	Iso No. Comp. Desc. Code Case /Note		Period 1				Period 2				Period 3			
					1	2	3	4	1	2	3	4	1	2	3	4
C-F-2	100112		ISI-13142-17-B	ISI	-	-	-	-	-	-	-	-	-	-	-	-
C5.51	W-11		Valve-to-Pipe	AUG	-	-	-	-	-	-	-	-	-	-	-	-
2	HPCI Water Side Sctn			OWN	-	-	-	-	-	-	-	-	-	-	-	-
				PRE	-	-	-	-	-	-	-	-	-	-	-	-
C-F-2	100113		ISI-13142-17-B	ISI	-	-	-	-	-	-	-	-	-	-	-	-
C5.51	W-12		Pipe-to-Valve	AUG	-	-	-	-	-	-	-	-	-	-	-	-
2	HPCI Water Side Sctn			OWN	-	-	-	-	-	-	-	-	-	-	-	-
				PRE	-	-	-	-	-	-	-	-	-	-	-	-
C-F-2	100114		ISI-13142-17-B	ISI	-	-	-	-	-	-	-	-	-	-	-	-
C5.51	W-13		Valve-to-Pipe	AUG	-	-	-	-	-	-	-	-	-	-	-	-
2	HPCI Water Side Sctn			OWN	-	-	-	-	-	-	-	-	-	-	-	-
				PRE	-	-	-	-	-	-	-	-	-	-	-	-
C-F-2	100115	ISI/MT/ISI-MT-1	ISI-13142-17-B	ISI	-	-	-	-	-	-	-	-	s	-	-	-
C5.51	W-14	ISI/UT/ISI-UT-1	Pipe-to-Tee	AUG	-	-	-	-	-	-	-	-	-	-	-	-
2	HPCI Water Side Sctn			OWN	-	-	-	-	-	-	-	-	-	-	-	-
				PRE	-	-	-	-	-	-	-	-	-	-	-	-
C-F-2	100116		ISI-13142-17-B	ISI	-	-	-	-	-	-	-	-	-	-	-	-
C5.51	W-15		Valve-to-Pipe	AUG	-	-	-	-	-	-	-	-	-	-	-	-
2	HPCI Water Side Sctn			OWN	-	-	-	-	-	-	-	-	-	-	-	-
				PRE	-	-	-	-	-	-	-	-	-	-	-	-
C-F-2	100117		ISI-13142-17-B	ISI	-	-	-	-	-	-	-	-	-	-	-	-
C5.51	W-16		Pipe-to-Valve	AUG	-	-	-	-	-	-	-	-	-	-	-	-
2	HPCI Water Side Sctn			OWN	-	-	-	-	-	-	-	-	-	-	-	-
				PRE	-	-	-	-	-	-	-	-	-	-	-	-
C-F-2	100118		ISI-13142-17-B	ISI	-	-	-	-	-	-	-	-	-	-	-	-
C5.51	W-17		Valve-to-Elbow	AUG	-	-	-	-	-	-	-	-	-	-	-	-
2	HPCI Water Side Sctn			OWN	-	-	-	-	-	-	-	-	-	-	-	-
				PRE	-	-	-	-	-	-	-	-	-	-	-	-
C-F-2	100119		ISI-13142-17-B	ISI	-	-	-	-	-	-	-	-	-	-	-	-
C5.51	W-18		Elbow-to-Tee	AUG	-	-	-	-	-	-	-	-	-	-	-	-
2	HPCI Water Side Sctn			OWN	-	-	-	-	-	-	-	-	-	-	-	-
				PRE	-	-	-	-	-	-	-	-	-	-	-	-
C-F-2	100120		ISI-13142-17-B	ISI	-	-	-	-	-	-	-	-	-	-	-	-
C5.51	W-19		Tee-to-Elbow	AUG	-	-	-	-	-	-	-	-	-	-	-	-
2	HPCI Water Side Sctn			OWN	-	-	-	-	-	-	-	-	-	-	-	-
				PRE	-	-	-	-	-	-	-	-	-	-	-	-
C-F-2	100121		ISI-13142-17-B	ISI	-	-	-	-	-	-	-	-	-	-	-	-
C5.51	W-20		Elbow-to-Valve	AUG	-	-	-	-	-	-	-	-	-	-	-	-
2	HPCI Water Side Sctn			OWN	-	-	-	-	-	-	-	-	-	-	-	-
				PRE	-	-	-	-	-	-	-	-	-	-	-	-

MONTICELLO Nuclear Generating Plant
3rd Interval ISI Plan Rev. 3 June 1, 1992 to May 31, 2002

Category, ItemNO, Class	Summary / CompID / System	Scope / Method / Procedure	Iso No. Comp. Desc. Code Case /Note		Period 1				Period 2				Period 3			
					1	2	3	4	1	2	3	4	1	2	3	4
C-F-2	100122		ISI-13142-17-B	ISI	-	-	-	-	-	-	-	-	-	-	-	-
C5.51	W-21		Valve-to-Pipe	AUG	-	-	-	-	-	-	-	-	-	-	-	-
2	HPCI Water Side Sctn			OWN	-	-	-	-	-	-	-	-	-	-	-	-
				PRE	-	-	-	-	-	-	-	-	-	-	-	-
C-F-2	100123		ISI-13142-17-B	ISI	-	-	-	-	-	-	-	-	-	-	-	-
C5.51	W-22		Pipe-to-Flange	AUG	-	-	-	-	-	-	-	-	-	-	-	-
2	HPCI Water Side Sctn			OWN	-	-	-	-	-	-	-	-	-	-	-	-
				PRE	-	-	-	-	-	-	-	-	-	-	-	-
C-F-2	100124		ISI-13142-17-B	ISI	-	-	-	-	-	-	-	-	-	-	-	-
C5.51	W-23		Flange-to-Pipe	AUG	-	-	-	-	-	-	-	-	-	-	-	-
2	HPCI Water Side Sctn			OWN	-	-	-	-	-	-	-	-	-	-	-	-
				PRE	-	-	-	-	-	-	-	-	-	-	-	-
C-F-2	100125		ISI-13142-17-B	ISI	-	-	-	-	-	-	-	-	-	-	-	-
C5.51	W-24		Pipe-to-Flange	AUG	-	-	-	-	-	-	-	-	-	-	-	-
2	HPCI Water Side Sctn			OWN	-	-	-	-	-	-	-	-	-	-	-	-
				PRE	-	-	-	-	-	-	-	-	-	-	-	-
C-F-2	100126		ISI-13142-17-B	ISI	-	-	-	-	-	-	-	-	-	-	-	-
C5.51	W-25		Flange-to-Reducer	AUG	-	-	-	-	-	-	-	-	-	-	-	-
2	HPCI Water Side Sctn			OWN	-	-	-	-	-	-	-	-	-	-	-	-
				PRE	-	-	-	-	-	-	-	-	-	-	-	-
C-F-2	100127		ISI-13142-17-B	ISI	-	-	-	-	-	-	-	-	-	-	-	-
C5.51	W-26		Reducer-to-Pump	AUG	-	-	-	-	-	-	-	-	-	-	-	-
2	HPCI Water Side Sctn			OWN	-	-	-	-	-	-	-	-	-	-	-	-
				PRE	-	-	-	-	-	-	-	-	-	-	-	-
F-C	100128		ISI-13142-17-C	ISI	-	-	-	-	-	-	-	-	-	-	-	-
F-A,B,C	H- 1		Spring / Clamp	AUG	-	-	-	-	-	-	-	-	-	-	-	-
2	RHR Suction B			OWN	-	-	-	-	-	-	-	-	-	-	-	-
				PRE	-	-	-	-	-	-	-	-	-	-	-	-
F-B	100129		ISI-13142-17-C	ISI	-	-	-	-	-	-	-	-	-	-	-	-
F-A,B,C	H- 2		Slide	AUG	-	-	-	-	-	-	-	-	-	-	-	-
2	RHR Suction B			OWN	-	-	-	-	-	-	-	-	-	-	-	-
				PRE	-	-	-	-	-	-	-	-	-	-	-	-
F-B	100130	ISI/VT/ISI-VT-2.0	ISI-13142-17-C	ISI	-	c	-	-	-	-	-	-	-	-	-	-
F-A,B,C	H- 3		Slide	AUG	-	-	-	-	-	-	-	-	-	-	-	-
2	RHR Suction B			OWN	-	-	-	-	-	-	-	-	-	-	-	-
				PRE	-	-	-	-	-	-	-	-	-	-	-	-
F-B	100131	ISI/VT/ISI-VT-2.0	ISI-13142-17-C	ISI	c	-	-	-	-	-	-	-	-	-	-	-
F-A,B,C	H- 4		Slide	AUG	-	-	-	-	-	-	-	-	-	-	-	-
2	RHR Suction B			OWN	-	-	-	-	-	-	-	-	-	-	-	-
				PRE	-	-	-	-	-	-	-	-	-	-	-	-

MONTICELLO Nuclear Generating Plant
3rd Interval ISI Plan Rev. 3 June 1, 1992 to May 31, 2002

Category, ItemNO, Class	Summary / CompID / System	Scope / Method / Procedure	Iso No. Comp. Desc. Code Case /Note		Period 1				Period 2				Period 3			
					1	2	3	4	1	2	3	4	1	2	3	4
F-B	100132	ISI/VT/ISI-VT-2.0	ISI-13142-17-C	ISI	c	-	-	-	-	-	-	-	-	-	-	-
F-A,B,C	H- 5		Strut / Clamp	AUG	-	-	-	-	-	-	-	-	-	-	-	-
2	RHR Suction B			OWN	-	-	-	-	-	-	-	-	-	-	-	-
				PRE	-	-	-	-	-	-	-	-	-	-	-	-
C-C	100133	ISI/VT/ISI-VT-2.0	ISI-13142-17-C	ISI	-	E	-	-	-	-	-	-	s	-	-	-
C3.20	H- 6	ISI/MT/ISI-MT-1	Dbl Spr / Half Clamp	AUG	-	-	-	-	-	-	-	-	-	-	-	-
2	RHR Suction B			OWN	-	-	-	-	-	-	-	-	-	-	-	-
				PRE	-	-	-	-	-	-	-	-	-	-	-	-
F-C	100134		ISI-13142-17-C	ISI	-	-	-	-	-	-	-	-	-	-	-	-
F-A,B,C	H- 7		Dbl Spring / Clamp	AUG	-	-	-	-	-	-	-	-	-	-	-	-
2	RHR Suction B			OWN	-	-	-	-	-	-	-	-	-	-	-	-
				PRE	-	-	-	-	-	-	-	-	-	-	-	-
C-C	100135	ISI/VT/ISI-VT-2.0	ISI-13142-17-C	ISI	-	c	-	-	-	-	-	-	b	-	-	-
C3.20	H- 8	ISI/PT/ISI-PT-1	Dbl Spr / Half Clamp	AUG	-	-	-	-	-	-	-	-	-	-	-	-
2	RHR Suction B			OWN	-	-	-	-	-	-	-	-	-	-	-	-
				PRE	-	-	-	-	-	-	-	-	-	-	-	-
C-C	100136	ISI/VT/ISI-VT-2.0	ISI-13142-17-C	ISI	c	-	-	-	-	-	-	-	-	-	-	-
C3.20	H- 9	ISI/PT/ISI-PT-1	Dbl Strut / 8 Lugs	AUG	-	-	-	-	-	-	-	-	-	-	-	-
2	RHR Suction B			OWN	-	-	-	-	-	-	-	-	-	-	-	-
				PRE	-	-	-	-	-	-	-	-	-	-	-	-
C-F-2	100137		ISI-13142-17-C	ISI	-	-	-	-	-	-	-	-	-	-	-	-
C5.51	W- 1		Tee-to-Pipe	AUG	-	-	-	-	-	-	-	-	-	-	-	-
2	RHR Suction B			OWN	-	-	-	-	-	-	-	-	-	-	-	-
				PRE	-	-	-	-	-	-	-	-	-	-	-	-
C-F-2	100138		ISI-13142-17-C	ISI	-	-	-	-	-	-	-	-	-	-	-	-
C5.51	W- 2		Pipe-to-Elbow	AUG	-	-	-	-	-	-	-	-	-	-	-	-
2	RHR Suction B			OWN	-	-	-	-	-	-	-	-	-	-	-	-
				PRE	-	-	-	-	-	-	-	-	-	-	-	-
C-F-2	100139	ISI/MT/ISI-MT-1	ISI-13142-17-C	ISI	c	-	-	-	-	-	-	-	b	-	-	-
C5.51	W- 3	ISI/UT/ISI-UT-1	Elbow-to-Pipe	AUG	-	-	-	-	-	-	-	-	-	-	-	-
2	RHR Suction B			OWN	-	-	-	-	-	-	-	-	-	-	-	-
				PRE	-	-	-	-	-	-	-	-	-	-	-	-
C-F-2	100140		ISI-13142-17-C	ISI	-	-	-	-	-	-	-	-	-	-	-	-
C5.51	W- 4		Pipe-to-Elbow	AUG	-	-	-	-	-	-	-	-	-	-	-	-
2	RHR Suction B			OWN	-	-	-	-	-	-	-	-	-	-	-	-
				PRE	-	-	-	-	-	-	-	-	-	-	-	-
C-F-2	100141		ISI-13142-17-C	ISI	-	-	-	-	-	-	-	-	-	-	-	-
C5.51	W- 5		Elbow-to-Pipe	AUG	-	-	-	-	-	-	-	-	-	-	-	-
2	RHR Suction B			OWN	-	-	-	-	-	-	-	-	-	-	-	-
				PRE	-	-	-	-	-	-	-	-	-	-	-	-

MONTICELLO Nuclear Generating Plant
3rd Interval ISI Plan Rev. 3 June 1, 1992 to May 31, 2002

Category, ItemNO, Class	Summary / CompID / System	Scope / Method / Procedure	Iso No. Comp. Desc. Code Case /Note		Period 1				Period 2				Period 3			
					1	2	3	4	1	2	3	4	1	2	3	4
C-F-2	100142	ISI/MT/ISI-MT-1	ISI-13142-17-C	ISI	-	c	-	-	-	-	-	-	-	-	-	-
C5.51	W- 6	ISI/UT/ISI-UT-1	Pipe-to-Elbow	AUG	-	-	-	-	-	-	-	-	-	-	-	-
2	RHR Suction B			OWN	-	-	-	-	-	-	-	-	-	-	-	-
				PRE	-	-	-	-	-	-	-	-	-	-	-	-
C-F-2	100143		ISI-13142-17-C	ISI	-	-	-	-	-	-	-	-	-	-	-	-
C5.51	W- 7		Elbow-to-Pipe	AUG	-	-	-	-	-	-	-	-	-	-	-	-
2	RHR Suction B			OWN	-	-	-	-	-	-	-	-	-	-	-	-
				PRE	-	-	-	-	-	-	-	-	-	-	-	-
C-F-2	100144		ISI-13142-17-C	ISI	-	-	-	-	-	-	-	-	-	-	-	-
C5.51	W- 8		Pipe-to-Valve	AUG	-	-	-	-	-	-	-	-	-	-	-	-
2	RHR Suction B			OWN	-	-	-	-	-	-	-	-	-	-	-	-
				PRE	-	-	-	-	-	-	-	-	-	-	-	-
C-F-2	100145		ISI-13142-17-C	ISI	-	-	-	-	-	-	-	-	-	-	-	-
C5.51	W- 9		Valve-to-Weldolet	AUG	-	-	-	-	-	-	-	-	-	-	-	-
2	RHR Suction B			OWN	-	-	-	-	-	-	-	-	-	-	-	-
				PRE	-	-	-	-	-	-	-	-	-	-	-	-
C-F-2	100146		ISI-13142-17-C	ISI	-	-	-	-	-	-	-	-	-	-	-	-
C5.81	W-10		Weldolet-to-Pipe	AUG	-	-	-	-	-	-	-	-	-	-	-	-
2	RHR Suction B			OWN	-	-	-	-	-	-	-	-	-	-	-	-
				PRE	-	-	-	-	-	-	-	-	-	-	-	-
C-F-2	100147		ISI-13142-17-C	ISI	-	-	-	-	-	-	-	-	-	-	-	-
C5.51	W-11		Valve-to-Reducer	AUG	-	-	-	-	-	-	-	-	-	-	-	-
2	RHR Suction B			OWN	-	-	-	-	-	-	-	-	-	-	-	-
				PRE	-	-	-	-	-	-	-	-	-	-	-	-
C-F-2	100148		ISI-13142-17-C	ISI	-	-	-	-	-	-	-	-	-	-	-	-
C5.51	W-12		Reducer-to-Pipe	AUG	-	-	-	-	-	-	-	-	-	-	-	-
2	RHR Suction B			OWN	-	-	-	-	-	-	-	-	-	-	-	-
				PRE	-	-	-	-	-	-	-	-	-	-	-	-
C-F-2	100149	ISI/MT/ISI-MT-1	ISI-13142-17-C	ISI	-	c	-	-	-	-	-	-	-	-	-	-
C5.81	W-13		Pipe-to-Weldolet	AUG	-	-	-	-	-	-	-	-	-	-	-	-
2	RHR Suction B			OWN	-	-	-	-	-	-	-	-	-	-	-	-
				PRE	-	-	-	-	-	-	-	-	-	-	-	-
C-F-2	100150		ISI-13142-17-C	ISI	-	-	-	-	-	-	-	-	-	-	-	-
C5.51	W-14		Weldolet-to-Valve	AUG	-	-	-	-	-	-	-	-	-	-	-	-
2	RHR Suction B			OWN	-	-	-	-	-	-	-	-	-	-	-	-
				PRE	-	-	-	-	-	-	-	-	-	-	-	-
C-F-2	100151		ISI-13142-17-C	ISI	-	-	-	-	-	-	-	-	-	-	-	-
C5.51	W-15		Valve-to-Pipe	AUG	-	-	-	-	-	-	-	-	-	-	-	-
2	RHR Suction B			OWN	-	-	-	-	-	-	-	-	-	-	-	-
				PRE	-	-	-	-	-	-	-	-	-	-	-	-

MONTICELLO Nuclear Generating Plant
3rd Interval ISI Plan Rev. 3 June 1, 1992 to May 31, 2002

Category, ItemNO, Class	Summary / CompID / System	Scope / Method / Procedure	Iso No. Comp. Desc. Code Case /Note		Period 1				Period 2				Period 3			
					1	2	3	4	1	2	3	4	1	2	3	4
C-F-2	100152		ISI-13142-17-C	ISI	-	-	-	-	-	-	-	-	-	-	-	-
C5.51	W-16		Pipe-to-Pipe	AUG	-	-	-	-	-	-	-	-	-	-	-	-
2	RHR Suction B			OWN	-	-	-	-	-	-	-	-	-	-	-	-
				PRE	-	-	-	-	-	-	-	-	-	-	-	-
C-F-2	100153		ISI-13142-17-C	ISI	-	-	-	-	-	-	-	-	-	-	-	-
C5.51	W-17		Pipe-to-Pipe	AUG	-	-	-	-	-	-	-	-	-	-	-	-
2	RHR Suction B			OWN	-	-	-	-	-	-	-	-	-	-	-	-
				PRE	-	-	-	-	-	-	-	-	-	-	-	-
C-F-2	100154		ISI-13142-17-C	ISI	-	-	-	-	-	-	-	-	-	-	-	-
C5.51	W-18		Pipe-to-Elbow	AUG	-	-	-	-	-	-	-	-	-	-	-	-
2	RHR Suction B			OWN	-	-	-	-	-	-	-	-	-	-	-	-
				PRE	-	-	-	-	-	-	-	-	-	-	-	-
C-F-2	100155		ISI-13142-17-C	ISI	-	-	-	-	-	-	-	-	-	-	-	-
C5.51	W-19		Elbow-to-Elbow	AUG	-	-	-	-	-	-	-	-	-	-	-	-
2	RHR Suction B			OWN	-	-	-	-	-	-	-	-	-	-	-	-
				PRE	-	-	-	-	-	-	-	-	-	-	-	-
C-F-2	100156	ISI/MT/ISI-MT-1	ISI-13142-17-C	ISI	-	-	-	-	-	c	-	-	b	-	-	-
C5.51	W-20	ISI/UT/ISI-UT-1	Elbow-to-Pump	AUG	-	-	-	-	-	-	-	-	-	-	-	-
2	RHR Suction B			OWN	-	-	-	-	-	-	-	-	-	-	-	-
				PRE	-	-	-	-	-	-	-	-	-	-	-	-
C-F-2	100157		ISI-13142-17-C	ISI	-	-	-	-	-	-	-	-	-	-	-	-
C5.81	W-21		Pipe-to-Weldolet	AUG	-	-	-	-	-	-	-	-	-	-	-	-
2	RHR Suction B			OWN	-	-	-	-	-	-	-	-	-	-	-	-
				PRE	-	-	-	-	-	-	-	-	-	-	-	-
C-F-2	100158		ISI-13142-17-C	ISI	-	-	-	-	-	-	-	-	-	-	-	-
C5.51	W-22		Weldolet-to-Valve	AUG	-	-	-	-	-	-	-	-	-	-	-	-
2	RHR Suction B			OWN	-	-	-	-	-	-	-	-	-	-	-	-
				PRE	-	-	-	-	-	-	-	-	-	-	-	-
C-F-2	100159		ISI-13142-17-C	ISI	-	-	-	-	-	-	-	-	-	-	-	-
C5.51	W-23		Valve-to-Pipe	AUG	-	-	-	-	-	-	-	-	-	-	-	-
2	RHR Suction B			OWN	-	-	-	-	-	-	-	-	-	-	-	-
				PRE	-	-	-	-	-	-	-	-	-	-	-	-
C-F-2	100160		ISI-13142-17-C	ISI	-	-	-	-	-	-	-	-	-	-	-	-
C5.51	W-24		Pipe-to-Pipe	AUG	-	-	-	-	-	-	-	-	-	-	-	-
2	RHR Suction B			OWN	-	-	-	-	-	-	-	-	-	-	-	-
				PRE	-	-	-	-	-	-	-	-	-	-	-	-
C-F-2	100161		ISI-13142-17-C	ISI	-	-	-	-	-	-	-	-	-	-	-	-
C5.51	W-25		Pipe-to-Pipe	AUG	-	-	-	-	-	-	-	-	-	-	-	-
2	RHR Suction B			OWN	-	-	-	-	-	-	-	-	-	-	-	-
				PRE	-	-	-	-	-	-	-	-	-	-	-	-

MONTICELLO Nuclear Generating Plant
3rd Interval ISI Plan Rev. 3 June 1, 1992 to May 31, 2002

Category, ItemNO, Class	Summary / CompID / System	Scope / Method / Procedure	Iso No. Comp. Desc. Code Case /Note		Period 1				Period 2				Period 3			
					1	2	3	4	1	2	3	4	1	2	3	4
C-F-2	100162		ISI-13142-17-C	ISI	-	-	-	-	-	-	-	-	-	-	-	-
C5.51	W-26		Pipe-to-Elbow	AUG	-	-	-	-	-	-	-	-	-	-	-	-
2	RHR Suction B			OWN	-	-	-	-	-	-	-	-	-	-	-	-
				PRE	-	-	-	-	-	-	-	-	-	-	-	-
C-F-2	100163		ISI-13142-17-C	ISI	-	-	-	-	-	-	-	-	-	-	-	-
C5.51	W-27		Elbow-to-Elbow	AUG	-	-	-	-	-	-	-	-	-	-	-	-
2	RHR Suction B			OWN	-	-	-	-	-	-	-	-	-	-	-	-
				PRE	-	-	-	-	-	-	-	-	-	-	-	-
C-F-2	100164		ISI-13142-17-C	ISI	-	-	-	-	-	-	-	-	-	-	-	-
C5.51	W-28		Elbow-to-Pump	AUG	-	-	-	-	-	-	-	-	-	-	-	-
2	RHR Suction B			OWN	-	-	-	-	-	-	-	-	-	-	-	-
				PRE	-	-	-	-	-	-	-	-	-	-	-	-
C-F-2	100165		ISI-13142-17-C	ISI	-	-	-	-	-	-	-	-	-	-	-	-
C5.51	W-29		Valve-to-Pipe	AUG	-	-	-	-	-	-	-	-	-	-	-	-
2	RHR Suction B			OWN	-	-	-	-	-	-	-	-	-	-	-	-
				PRE	-	-	-	-	-	-	-	-	-	-	-	-
C-F-2	100166		ISI-13142-17-C	ISI	-	-	-	-	-	-	-	-	-	-	-	-
C5.51	W-30		Pipe-to-Elbow	AUG	-	-	-	-	-	-	-	-	-	-	-	-
2	RHR Suction B			OWN	-	-	-	-	-	-	-	-	-	-	-	-
				PRE	-	-	-	-	-	-	-	-	-	-	-	-
C-F-2	100167	ISI/MT/ISI-MT-1	ISI-13142-17-C	ISI	-	-	-	-	-	-	-	-	-	s	-	-
C5.51	W-31	ISI/UT/ISI-UT-1	Elbow-to-Pipe	AUG	-	-	-	-	-	-	-	-	-	-	-	-
2	RHR Suction B			OWN	-	-	-	-	-	-	-	-	-	-	-	-
				PRE	-	-	-	-	-	-	-	-	-	-	-	-
F-C	100168	ISI/VT/ISI-VT-2.0	ISI-13142-18-A	ISI	-	-	-	-	c	-	-	-	-	-	-	-
F-A,B,C	H- 1		Spring / Clamp	AUG	-	-	-	-	-	-	-	-	-	-	-	-
2	RHR Discharge B			OWN	-	-	-	-	-	-	-	-	-	-	-	-
				PRE	-	-	-	-	-	-	-	-	-	-	-	-
F-B	100169	ISI/VT/ISI-VT-2.0	ISI-13142-18-A	ISI	-	-	-	-	-	-	-	-	s	-	-	-
F-A,B,C	H- 2		Box Restraint	AUG	-	-	-	-	-	-	-	-	-	-	-	-
2	RHR Discharge B			OWN	-	-	-	-	-	-	-	-	-	-	-	-
				PRE	-	-	-	-	-	-	-	-	-	-	-	-
F-C	100170		ISI-13142-18-A	ISI	-	-	-	-	-	-	-	-	-	-	-	-
F-A,B,C	H- 3		Spring / Clamp (removed Mod 92Q520)	AUG	-	-	-	-	-	-	-	-	-	-	-	-
2	RHR Discharge B			OWN	-	-	-	-	-	-	-	-	-	-	-	-
				PRE	-	-	-	-	-	-	-	-	-	-	-	-
F-B	100171	ISI/VT/ISI-VT-2.0	ISI-13142-18-A	ISI	-	-	-	-	-	-	-	-	s	-	-	-
F-A,B,C	H- 4		Box Restraint	AUG	-	-	-	-	-	-	-	-	-	-	-	-
2	RHR Discharge B			OWN	-	-	-	-	-	-	-	-	-	-	-	-
				PRE	-	-	-	-	-	-	-	-	-	-	-	-

MONTICELLO Nuclear Generating Plant
3rd Interval ISI Plan Rev. 3 June 1, 1992 to May 31, 2002

Category, ItemNO, Class	Summary / CompID / System	Scope / Method / Procedure	Iso No. Comp. Desc. Code Case /Note		Period 1				Period 2				Period 3			
					1	2	3	4	1	2	3	4	1	2	3	4
F-C	100172		ISI-13142-18-A	ISI	-	-	-	-	-	-	-	-	-	-	-	-
F-A,B,C	H- 5		Dbl Spr/U-Blt/Saddle	AUG	-	-	-	-	-	-	-	-	-	-	-	-
2	RHR Discharge B			OWN	-	-	-	-	-	-	-	-	-	-	-	-
				PRE	-	-	-	-	-	-	-	-	-	-	-	-
F-C	100173		ISI-13142-18-A	ISI	-	-	-	-	-	-	-	-	-	-	-	-
F-A,B,C	H- 6		Dbl Spr/U-Blt/Saddle	AUG	-	-	-	-	-	-	-	-	-	-	-	-
2	RHR Discharge B			OWN	-	-	-	-	-	-	-	-	-	-	-	-
				PRE	-	-	-	-	-	-	-	-	-	-	-	-
F-B	100174	ISI/VT/ISI-VT-2.0	ISI-13142-18-A	ISI	c	-	-	-	-	-	-	-	-	-	-	-
F-A,B,C	H- 7		Strut / Clamp	AUG	-	-	-	-	-	-	-	-	-	-	-	-
2	RHR Discharge B			OWN	-	-	-	-	-	-	-	-	-	-	-	-
				PRE	-	-	-	-	-	-	-	-	-	-	-	-
F-C	100175	ISI/VT/ISI-VT-2.0	ISI-13142-18-A	ISI	-	-	-	-	c	-	-	-	-	-	-	-
F-A,B,C	H- 8		Dbl Spr/U-Blt/Saddle	AUG	-	-	-	-	-	-	-	-	-	-	-	-
2	RHR Discharge B			OWN	-	-	-	-	-	-	-	-	-	-	-	-
				PRE	-	-	-	-	-	-	-	-	-	-	-	-
F-B	100176	ISI/VT/ISI-VT-2.0	ISI-13142-18-A	ISI	c	-	-	-	B	-	-	-	-	-	-	-
F-A,B,C	H-11		Seismic Restraint	AUG	-	-	-	-	-	-	-	-	-	-	-	-
2	RHR Discharge B			OWN	-	-	-	-	-	-	-	-	-	-	-	-
				PRE	-	-	-	-	-	-	-	-	-	-	-	-
F-C	100178	ISI/VT/ISI-VT-2.0	ISI-13142-18-A	ISI	c	-	-	-	B	-	-	-	-	-	-	-
F-A,B,C	H-10		Spring/Clamp/Slide	AUG	-	-	-	-	-	-	-	-	-	-	-	-
2	RHR Discharge B			OWN	-	-	-	-	-	-	-	-	-	-	-	-
				PRE	-	-	-	-	-	-	-	-	-	-	-	-
C-C	100179	ISI/VT/ISI-VT-2.0	ISI-13142-18-A	ISI	c	-	-	-	-	-	-	-	-	-	-	-
C3.20	H- 9	ISI/MT/ISI-MT-1.0	Dbl Spring / 4 Lugs	AUG	-	-	-	-	-	-	-	-	-	-	-	-
2	RHR Discharge B			OWN	-	-	-	-	-	-	-	-	-	-	-	-
				PRE	-	-	-	-	-	-	-	-	-	-	-	-
C-F-2	100181		ISI-13142-18-A	ISI	-	-	-	-	-	-	-	-	-	-	-	-
C5.51	W- 1		Tee-to-Pipe	AUG	-	-	-	-	-	-	-	-	-	-	-	-
2	RHR Discharge B			OWN	-	-	-	-	-	-	-	-	-	-	-	-
				PRE	-	-	-	-	-	-	-	-	-	-	-	-
C-F-2	100182		ISI-13142-18-A	ISI	-	-	-	-	-	-	-	-	-	-	-	-
C5.51	W- 2		Pipe-to-Elbow	AUG	-	-	-	-	-	-	-	-	-	-	-	-
2	RHR Discharge B			OWN	-	-	-	-	-	-	-	-	-	-	-	-
				PRE	-	-	-	-	-	-	-	-	-	-	-	-
C-F-2	100183		ISI-13142-18-A	ISI	-	-	-	-	-	-	-	-	-	-	-	-
C5.51	W- 3		Elbow-to-Reducer	AUG	-	-	-	-	-	-	-	-	-	-	-	-
2	RHR Discharge B			OWN	-	-	-	-	-	-	-	-	-	-	-	-
				PRE	-	-	-	-	-	-	-	-	-	-	-	-

MONTICELLO Nuclear Generating Plant
3rd Interval ISI Plan Rev. 3 June 1, 1992 to May 31, 2002

Category, ItemNO, Class	Summary / CompID / System	Scope / Method / Procedure	Iso No. Comp. Desc. Code Case /Note		Period 1				Period 2				Period 3			
					1	2	3	4	1	2	3	4	1	2	3	4
C-F-2	100184		ISI-13142-18-A	ISI	-	-	-	-	-	-	-	-	-	-	-	-
C5.51	W- 4		Tee-to-Pipe	AUG	-	-	-	-	-	-	-	-	-	-	-	-
2	RHR Discharge B			OWN	-	-	-	-	-	-	-	-	-	-	-	-
				PRE	-	-	-	-	-	-	-	-	-	-	-	-
C-F-2	100185		ISI-13142-18-A	ISI	-	-	-	-	-	-	-	-	-	-	-	-
C5.51	W- 5		Pipe-to-Elbow	AUG	-	-	-	-	-	-	-	-	-	-	-	-
2	RHR Discharge B			OWN	-	-	-	-	-	-	-	-	-	-	-	-
				PRE	-	-	-	-	-	-	-	-	-	-	-	-
C-F-2	100186		ISI-13142-18-A	ISI	-	-	-	-	-	-	-	-	-	-	-	-
C5.51	W- 6		Elbow-to-Pipe	AUG	-	-	-	-	-	-	-	-	-	-	-	-
2	RHR Discharge B			OWN	-	-	-	-	-	-	-	-	-	-	-	-
				PRE	-	-	-	-	-	-	-	-	-	-	-	-
C-F-2	100187		ISI-13142-18-A	ISI	-	-	-	-	-	-	-	-	-	-	-	-
C5.51	W- 7		Pipe-to-Elbow	AUG	-	-	-	-	-	-	-	-	-	-	-	-
2	RHR Discharge B			OWN	-	-	-	-	-	-	-	-	-	-	-	-
				PRE	-	-	-	-	-	-	-	-	-	-	-	-
C-F-2	100188		ISI-13142-18-A	ISI	-	-	-	-	-	-	-	-	-	-	-	-
C5.51	W- 8		Elbow-to-Pipe	AUG	-	-	-	-	-	-	-	-	-	-	-	-
2	RHR Discharge B			OWN	-	-	-	-	-	-	-	-	-	-	-	-
				PRE	-	-	-	-	-	-	-	-	-	-	-	-
C-F-2	100189		ISI-13142-18-A	ISI	-	-	-	-	-	-	-	-	-	-	-	-
C5.51	W- 9		Pipe-to-Elbow	AUG	-	-	-	-	-	-	-	-	-	-	-	-
2	RHR Discharge B			OWN	-	-	-	-	-	-	-	-	-	-	-	-
				PRE	-	-	-	-	-	-	-	-	-	-	-	-
C-F-2	100190	ISI/MT/ISI-MT-1	ISI-13142-18-A	ISI	-	c	-	-	-	B	-	-	-	-	-	-
C5.51	W-10	ISI/UT/ISI-UT-1	Elbow-to-Pipe	AUG	-	-	-	-	-	-	-	-	-	-	-	-
2	RHR Discharge B			OWN	-	-	-	-	-	-	-	-	-	-	-	-
				PRE	-	-	-	-	-	-	-	-	-	-	-	-
C-F-2	100191		ISI-13142-18-A	ISI	-	-	-	-	-	-	-	-	-	-	-	-
C5.51	W-11		Pipe-to-Pipe	AUG	-	-	-	-	-	-	-	-	-	-	-	-
2	RHR Discharge B			OWN	-	-	-	-	-	-	-	-	-	-	-	-
				PRE	-	-	-	-	-	-	-	-	-	-	-	-
C-F-2	100192		ISI-13142-18-A	ISI	-	-	-	-	-	-	-	-	-	-	-	-
C5.51	W-12		Pipe-to-Pipe	AUG	-	-	-	-	-	-	-	-	-	-	-	-
2	RHR Discharge B			OWN	-	-	-	-	-	-	-	-	-	-	-	-
				PRE	-	-	-	-	-	-	-	-	-	-	-	-
C-F-2	100193		ISI-13142-18-A	ISI	-	-	-	-	-	-	-	-	-	-	-	-
C5.51	W-13		Pipe-to-Tee	AUG	-	-	-	-	-	-	-	-	-	-	-	-
2	RHR Discharge B			OWN	-	-	-	-	-	-	-	-	-	-	-	-
				PRE	-	-	-	-	-	-	-	-	-	-	-	-

MONTICELLO Nuclear Generating Plant
3rd Interval ISI Plan Rev. 3 June 1, 1992 to May 31, 2002

Category, ItemNO, Class	Summary / CompID / System	Scope / Method / Procedure	Iso No. Comp. Desc. Code Case /Note		Period 1				Period 2				Period 3			
					1	2	3	4	1	2	3	4	1	2	3	4
C-F-2	100194	ISI/MT/ISI-MT-1	ISI-13142-18-A	ISI	c	-	-	-	-	-	-	-	-	-	-	-
C5.51	W-14	ISI/UT/ISI-UT-1	Tee-to-Pipe	AUG	-	-	-	-	-	-	-	-	-	-	-	-
2	RHR Discharge B			OWN	-	-	-	-	-	-	-	-	-	-	-	-
				PRE	-	-	-	-	-	-	-	-	-	-	-	-
C-F-2	100195		ISI-13142-18-A	ISI	-	-	-	-	-	-	-	-	-	-	-	-
C5.51	W-15		Pipe-to-Pipe	AUG	-	-	-	-	-	-	-	-	-	-	-	-
2	RHR Discharge B			OWN	-	-	-	-	-	-	-	-	-	-	-	-
				PRE	-	-	-	-	-	-	-	-	-	-	-	-
C-F-2	100196		ISI-13142-18-A	ISI	-	-	-	-	-	-	-	-	-	-	-	-
C5.51	W-16		Pipe-to-Valve	AUG	-	-	-	-	-	-	-	-	-	-	-	-
2	RHR Discharge B			OWN	-	-	-	-	-	-	-	-	-	-	-	-
				PRE	-	-	-	-	-	-	-	-	-	-	-	-
C-F-2	100197		ISI-13142-18-A	ISI	-	-	-	-	-	-	-	-	-	-	-	-
C5.51	W-17		Valve-to-Elbow	AUG	-	-	-	-	-	-	-	-	-	-	-	-
2	RHR Discharge B			OWN	-	-	-	-	-	-	-	-	-	-	-	-
				PRE	-	-	-	-	-	-	-	-	-	-	-	-
C-F-2	100198		ISI-13142-18-A	ISI	-	-	-	-	-	-	-	-	-	-	-	-
C5.51	W-18		Elbow-to-Valve	AUG	-	-	-	-	-	-	-	-	-	-	-	-
2	RHR Discharge B			OWN	-	-	-	-	-	-	-	-	-	-	-	-
				PRE	-	-	-	-	-	-	-	-	-	-	-	-
C-F-2	100199	ISI/MT/ISI-MT-1	ISI-13142-18-A	ISI	-	c	-	-	-	-	-	-	-	-	-	-
C5.51	W-19	ISI/UT/ISI-UT-1	Tee-to-Elbow	AUG	-	-	-	-	-	-	-	-	-	-	-	-
2	RHR Discharge B			OWN	-	-	-	-	-	-	-	-	-	-	-	-
				PRE	-	-	-	-	-	-	-	-	-	-	-	-
C-F-2	100200		ISI-13142-18-A	ISI	-	-	-	-	-	-	-	-	-	-	-	-
C5.51	W-20		Elbow-to-Reducer	AUG	-	-	-	-	-	-	-	-	-	-	-	-
2	RHR Discharge B			OWN	-	-	-	-	-	-	-	-	-	-	-	-
				PRE	-	-	-	-	-	-	-	-	-	-	-	-
C-F-2	100201		ISI-13142-18-A	ISI	-	-	-	-	-	-	-	-	-	-	-	-
C5.51	W-21		Reducer-to-Pipe	AUG	-	-	-	-	-	-	-	-	-	-	-	-
2	RHR Discharge B			OWN	-	-	-	-	-	-	-	-	-	-	-	-
				PRE	-	-	-	-	-	-	-	-	-	-	-	-
C-F-2	100202	ISI/MT/ISI-MT-1	ISI-13142-18-A	ISI	c	-	-	-	-	-	-	-	-	-	-	-
C5.51	W-22	ISI/UT/ISI-UT-1	Pipe-to-Elbow	AUG	-	-	-	-	-	-	-	-	-	-	-	-
2	RHR Discharge B			OWN	-	-	-	-	-	-	-	-	-	-	-	-
				PRE	-	-	-	-	-	-	-	-	-	-	-	-
C-F-2	100203		ISI-13142-18-A	ISI	-	-	-	-	-	-	-	-	-	-	-	-
C5.51	W-23		Elbow-to-Valve	AUG	-	-	-	-	-	-	-	-	-	-	-	-
2	RHR Discharge B			OWN	-	-	-	-	-	-	-	-	-	-	-	-
				PRE	-	-	-	-	-	-	-	-	-	-	-	-

MONTICELLO Nuclear Generating Plant
3rd Interval ISI Plan Rev. 3 June 1, 1992 to May 31, 2002

Category, ItemNO, Class	Summary / CompID / System	Scope / Method / Procedure	Iso No. Comp. Desc. Code Case /Note		Period 1				Period 2				Period 3			
					1	2	3	4	1	2	3	4	1	2	3	4
C-F-2	100204		ISI-13142-18-A	ISI	-	-	-	-	-	-	-	-	-	-	-	-
C5.51	W-24		Valve-to-Pipe	AUG	-	-	-	-	-	-	-	-	-	-	-	-
2	RHR Discharge B			OWN	-	-	-	-	-	-	-	-	-	-	-	-
				PRE	-	-	-	-	-	-	-	-	-	-	-	-
C-F-2	100205		ISI-13142-18-A	ISI	-	-	-	-	-	-	-	-	-	-	-	-
C5.81	W-25		Pipe-to-Weldolet	AUG	-	-	-	-	-	-	-	-	-	-	-	-
2	RHR Discharge B			OWN	-	-	-	-	-	-	-	-	-	-	-	-
				PRE	-	-	-	-	-	-	-	-	-	-	-	-
C-F-2	100206		ISI-13142-18-A	ISI	-	-	-	-	-	-	-	-	-	-	-	-
C5.51	W-26		Pipe-to-Valve	AUG	-	-	-	-	-	-	-	-	-	-	-	-
2	RHR Discharge B			OWN	-	-	-	-	-	-	-	-	-	-	-	-
				PRE	-	-	-	-	-	-	-	-	-	-	-	-
F-C	100207	ISI/VT/ISI-VT-2.0	ISI-13142-18-B	ISI	-	-	-	-	-	-	-	-	-	s	-	-
F-A,B,C	H- 1		Variable Slide	AUG	-	-	-	-	-	-	-	-	-	-	-	-
2	RHR Discharge B			OWN	-	-	-	-	-	-	-	-	-	-	-	-
				PRE	-	-	-	-	-	-	-	-	-	-	-	-
F-C	100208	ISI/VT/ISI-VT-2.0	ISI-13142-18-B	ISI	c	-	-	-	-	-	-	-	-	-	-	-
F-A,B,C	H- 2		Variable Clamp	AUG	-	-	-	-	-	-	-	-	-	-	-	-
2	RHR Discharge B			OWN	-	-	-	-	-	-	-	-	-	-	-	-
				PRE	-	-	-	-	-	-	-	-	-	-	-	-
* F-B	100209	ISI/VT/ISI-VT-2.0	ISI-13142-18-B	ISI	-	-	-	-	c	-	-	-	-	-	-	-
F-A,B,C	H- 3		Strut / Clamp	AUG	-	-	-	-	-	-	-	-	-	-	-	-
2	RHR Discharge B			OWN	-	-	-	-	-	-	-	-	-	-	-	-
				PRE	-	-	-	-	-	-	-	-	-	-	-	-
F-C	100210	ISI/VT/ISI-VT-2.0	ISI-13142-18-B	ISI	-	-	-	-	c	-	-	-	-	-	-	-
F-A,B,C	H- 4		Spring / Clamp	AUG	-	-	-	-	-	-	-	-	-	-	-	-
2	RHR Discharge B			OWN	-	-	-	-	-	-	-	-	-	-	-	-
				PRE	-	-	-	-	-	-	-	-	-	-	-	-
C-F-2	100213	ISI/MT/ISI-MT-1	ISI-13142-18-B	ISI	-	-	-	-	-	c	-	-	-	b	-	-
C5.51	W- 1	ISI/UT/ISI-UT-1	Pump-to-Elbow	AUG	-	-	-	-	-	-	-	-	-	-	-	-
2	RHR Discharge B			OWN	-	-	-	-	-	-	-	-	-	-	-	-
				PRE	-	-	-	-	-	-	-	-	-	-	-	-
C-F-2	100214		ISI-13142-18-B	ISI	-	-	-	-	-	-	-	-	-	-	-	-
C5.51	W- 2		Elbow-to-Reducer	AUG	-	-	-	-	-	-	-	-	-	-	-	-
2	RHR Discharge B			OWN	-	-	-	-	-	-	-	-	-	-	-	-
				PRE	-	-	-	-	-	-	-	-	-	-	-	-
C-F-2	100215		ISI-13142-18-B	ISI	-	-	-	-	-	-	-	-	-	-	-	-
CX.XX	W- 3		Reducer-to-Valve	AUG	-	-	-	-	-	-	-	-	-	-	-	-
2	RHR Discharge B			OWN	-	-	-	-	-	-	-	-	-	-	-	-
				PRE	-	-	-	-	-	-	-	-	-	-	-	-

MONTICELLO Nuclear Generating Plant
3rd Interval ISI Plan Rev. 3 June 1, 1992 to May 31, 2002

Category, ItemNO, Class	Summary / CompID / System	Scope / Method / Procedure	Iso No. Comp. Desc. Code Case /Note		Period 1				Period 2				Period 3			
					1	2	3	4	1	2	3	4	1	2	3	4
C-F-2	100216		ISI-13142-18-B	ISI	-	-	-	-	-	-	-	-	-	-	-	-
CX.XX	W- 4		Valve-to-Pipe	AUG	-	-	-	-	-	-	-	-	-	-	-	-
2	RHR Discharge B			OWN	-	-	-	-	-	-	-	-	-	-	-	-
				PRE	-	-	-	-	-	-	-	-	-	-	-	-
C-F-2	100217		ISI-13142-18-B	ISI	-	-	-	-	-	-	-	-	-	-	-	-
CX.XX	W- 5		Pipe-to-Valve	AUG	-	-	-	-	-	-	-	-	-	-	-	-
2	RHR Discharge B			OWN	-	-	-	-	-	-	-	-	-	-	-	-
				PRE	-	-	-	-	-	-	-	-	-	-	-	-
C-F-2	100218		ISI-13142-18-B	ISI	-	-	-	-	-	-	-	-	-	-	-	-
CX.XX	W- 6		Valve-to-Elbow	AUG	-	-	-	-	-	-	-	-	-	-	-	-
2	RHR Discharge B			OWN	-	-	-	-	-	-	-	-	-	-	-	-
				PRE	-	-	-	-	-	-	-	-	-	-	-	-
C-F-2	100219		ISI-13142-18-B	ISI	-	-	-	-	-	-	-	-	-	-	-	-
CX.XX	W- 7		Elbow-to-Elbow	AUG	-	-	-	-	-	-	-	-	-	-	-	-
2	RHR Discharge B			OWN	-	-	-	-	-	-	-	-	-	-	-	-
				PRE	-	-	-	-	-	-	-	-	-	-	-	-
C-F-2	100220		ISI-13142-18-B	ISI	-	-	-	-	-	-	-	-	-	-	-	-
CX.XX	W- 8		Elbow-to-Pipe	AUG	-	-	-	-	-	-	-	-	-	-	-	-
2	RHR Discharge B			OWN	-	-	-	-	-	-	-	-	-	-	-	-
				PRE	-	-	-	-	-	-	-	-	-	-	-	-
C-F-2	100221		ISI-13142-18-B	ISI	-	-	-	-	-	-	-	-	-	-	-	-
CX.XX	W- 9		Pipe-to-Tee	AUG	-	-	-	-	-	-	-	-	-	-	-	-
2	RHR Discharge B			OWN	-	-	-	-	-	-	-	-	-	-	-	-
				PRE	-	-	-	-	-	-	-	-	-	-	-	-
C-F-2	100222		ISI-13142-18-B	ISI	-	-	-	-	-	-	-	-	-	-	-	-
C5.51	W-10		Pump-to-Elbow	AUG	-	-	-	-	-	-	-	-	-	-	-	-
2	RHR Discharge B			OWN	-	-	-	-	-	-	-	-	-	-	-	-
				PRE	-	-	-	-	-	-	-	-	-	-	-	-
C-F-2	100223		ISI-13142-18-B	ISI	-	-	-	-	-	-	-	-	-	-	-	-
C5.51	W-11		Elbow-to-Reducer	AUG	-	-	-	-	-	-	-	-	-	-	-	-
2	RHR Discharge B			OWN	-	-	-	-	-	-	-	-	-	-	-	-
				PRE	-	-	-	-	-	-	-	-	-	-	-	-
C-F-2	100224		ISI-13142-18-B	ISI	-	-	-	-	-	-	-	-	-	-	-	-
CX.XX	W-12		Reducer-to-Valve	AUG	-	-	-	-	-	-	-	-	-	-	-	-
2	RHR Discharge B			OWN	-	-	-	-	-	-	-	-	-	-	-	-
				PRE	-	-	-	-	-	-	-	-	-	-	-	-
C-F-2	100225		ISI-13142-18-B	ISI	-	-	-	-	-	-	-	-	-	-	-	-
CX.XX	W-13		Valve-to-Pipe	AUG	-	-	-	-	-	-	-	-	-	-	-	-
2	RHR Discharge B			OWN	-	-	-	-	-	-	-	-	-	-	-	-
				PRE	-	-	-	-	-	-	-	-	-	-	-	-

MONTICELLO Nuclear Generating Plant
3rd Interval ISI Plan Rev. 3 June 1, 1992 to May 31, 2002

Category, ItemNO, Class	Summary / CompID / System	Scope / Method / Procedure	Iso No. Comp. Desc. Code Case /Note		Period 1				Period 2				Period 3			
					1	2	3	4	1	2	3	4	1	2	3	4
C-F-2	100226		ISI-13142-18-B	ISI	-	-	-	-	-	-	-	-	-	-	-	-
CX.XX	W-14		Pipe-to-Valve	AUG	-	-	-	-	-	-	-	-	-	-	-	-
2	RHR Discharge B			OWN	-	-	-	-	-	-	-	-	-	-	-	-
				PRE	-	-	-	-	-	-	-	-	-	-	-	-
C-F-2	100227		ISI-13142-18-B	ISI	-	-	-	-	-	-	-	-	-	-	-	-
CX.XX	W-15		Valve-to-Elbow	AUG	-	-	-	-	-	-	-	-	-	-	-	-
2	RHR Discharge B			OWN	-	-	-	-	-	-	-	-	-	-	-	-
				PRE	-	-	-	-	-	-	-	-	-	-	-	-
C-F-2	100228		ISI-13142-18-B	ISI	-	-	-	-	-	-	-	-	-	-	-	-
CX.XX	W-16		Elbow-to-Elbow	AUG	-	-	-	-	-	-	-	-	-	-	-	-
2	RHR Discharge B			OWN	-	-	-	-	-	-	-	-	-	-	-	-
				PRE	-	-	-	-	-	-	-	-	-	-	-	-
C-F-2	100229		ISI-13142-18-B	ISI	-	-	-	-	-	-	-	-	-	-	-	-
CX.XX	W-17		Pipe-to-Pipe	AUG	-	-	-	-	-	-	-	-	-	-	-	-
2	RHR Discharge B			OWN	-	-	-	-	-	-	-	-	-	-	-	-
				PRE	-	-	-	-	-	-	-	-	-	-	-	-
C-F-2	100230		ISI-13142-18-B	ISI	-	-	-	-	-	-	-	-	-	-	-	-
CX.XX	W-18		Pipe-to-Tee	AUG	-	-	-	-	-	-	-	-	-	-	-	-
2	RHR Discharge B			OWN	-	-	-	-	-	-	-	-	-	-	-	-
				PRE	-	-	-	-	-	-	-	-	-	-	-	-
C-F-2	100231		ISI-13142-18-B	ISI	-	-	-	-	-	-	-	-	-	-	-	-
CX.XX	W-19		Elbow-to-Reducer	AUG	-	-	-	-	-	-	-	-	-	-	-	-
2	RHR Discharge B			OWN	-	-	-	-	-	-	-	-	-	-	-	-
				PRE	-	-	-	-	-	-	-	-	-	-	-	-
C-F-2	100232		ISI-13142-18-B	ISI	-	-	-	-	-	-	-	-	-	-	-	-
C5.51	W-20		Reducer-to-Pipe	AUG	-	-	-	-	-	-	-	-	-	-	-	-
2	RHR Discharge B			OWN	-	-	-	-	-	-	-	-	-	-	-	-
				PRE	-	-	-	-	-	-	-	-	-	-	-	-
C-F-2	100233		ISI-13142-18-B	ISI	-	-	-	-	-	-	-	-	-	-	-	-
C5.51	W-21		Pipe-to-Tee	AUG	-	-	-	-	-	-	-	-	-	-	-	-
2	RHR Discharge B			OWN	-	-	-	-	-	-	-	-	-	-	-	-
				PRE	-	-	-	-	-	-	-	-	-	-	-	-
C-F-2	100234		ISI-13142-18-B	ISI	-	-	-	-	-	-	-	-	-	-	-	-
C5.51	W-22		Tee-to-Pipe	AUG	-	-	-	-	-	-	-	-	-	-	-	-
2	RHR Discharge B			OWN	-	-	-	-	-	-	-	-	-	-	-	-
				PRE	-	-	-	-	-	-	-	-	-	-	-	-
C-F-2	100235		ISI-13142-18-B	ISI	-	-	-	-	-	-	-	-	-	-	-	-
C5.51	W-23		Pipe-to-Tee	AUG	-	-	-	-	-	-	-	-	-	-	-	-
2	RHR Discharge B			OWN	-	-	-	-	-	-	-	-	-	-	-	-
				PRE	-	-	-	-	-	-	-	-	-	-	-	-

MONTICELLO Nuclear Generating Plant
3rd Interval ISI Plan Rev. 3 June 1, 1992 to May 31, 2002

Category, ItemNO, Class	Summary / CompID / System	Scope / Method / Procedure	Iso No. Comp. Desc. Code Case /Note		Period 1				Period 2				Period 3			
					1	2	3	4	1	2	3	4	1	2	3	4
C-F-2	100236		ISI-13142-18-B	ISI	-	-	-	-	-	-	-	-	-	-	-	-
C5.51	W-24		Tee-to-Pipe	AUG	-	-	-	-	-	-	-	-	-	-	-	-
2	RHR Discharge B			OWN	-	-	-	-	-	-	-	-	-	-	-	-
				PRE	-	-	-	-	-	-	-	-	-	-	-	-
C-F-2	100237		ISI-13142-18-B	ISI	-	-	-	-	-	-	-	-	-	-	-	-
C5.51	W-25		Pipe-to-Elbow	AUG	-	-	-	-	-	-	-	-	-	-	-	-
2	RHR Discharge B			OWN	-	-	-	-	-	-	-	-	-	-	-	-
				PRE	-	-	-	-	-	-	-	-	-	-	-	-
C-F-2	100238		ISI-13142-18-B	ISI	-	-	-	-	-	-	-	-	-	-	-	-
C5.51	W-26		Elbow-to-Valve	AUG	-	-	-	-	-	-	-	-	-	-	-	-
2	RHR Discharge B			OWN	-	-	-	-	-	-	-	-	-	-	-	-
				PRE	-	-	-	-	-	-	-	-	-	-	-	-
C-F-2	100239		ISI-13142-18-B	ISI	-	-	-	-	-	-	-	-	-	-	-	-
C5.51	W-27		Valve-to-Reducer	AUG	-	-	-	-	-	-	-	-	-	-	-	-
2	RHR Discharge B			OWN	-	-	-	-	-	-	-	-	-	-	-	-
				PRE	-	-	-	-	-	-	-	-	-	-	-	-
C-F-2	100240		ISI-13142-18-B	ISI	-	-	-	-	-	-	-	-	-	-	-	-
C5.51	W-28		Reducer-to-Nozzle	AUG	-	-	-	-	-	-	-	-	-	-	-	-
2	RHR Discharge B			OWN	-	-	-	-	-	-	-	-	-	-	-	-
				PRE	-	-	-	-	-	-	-	-	-	-	-	-
C-F-2	100241		ISI-13142-18-B	ISI	-	-	-	-	-	-	-	-	-	-	-	-
C5.51	W-29		Tee-to-Pipe	AUG	-	-	-	-	-	-	-	-	-	-	-	-
2	RHR Discharge B			OWN	-	-	-	-	-	-	-	-	-	-	-	-
				PRE	-	-	-	-	-	-	-	-	-	-	-	-
C-F-2	100242		ISI-13142-18-B	ISI	-	-	-	-	-	-	-	-	-	-	-	-
C5.51	W-30		Pipe-to-Elbow	AUG	-	-	-	-	-	-	-	-	-	-	-	-
2	RHR Discharge B			OWN	-	-	-	-	-	-	-	-	-	-	-	-
				PRE	-	-	-	-	-	-	-	-	-	-	-	-
C-F-2	100243		ISI-13142-18-B	ISI	-	-	-	-	-	-	-	-	-	-	-	-
C5.51	W-31		Elbow-to-Valve	AUG	-	-	-	-	-	-	-	-	-	-	-	-
2	RHR Discharge B			OWN	-	-	-	-	-	-	-	-	-	-	-	-
				PRE	-	-	-	-	-	-	-	-	-	-	-	-
C-F-2	100244		ISI-13142-18-B	ISI	-	-	-	-	-	-	-	-	-	-	-	-
C5.51	W-32		Valve-to-Pipe	AUG	-	-	-	-	-	-	-	-	-	-	-	-
2	RHR Discharge B			OWN	-	-	-	-	-	-	-	-	-	-	-	-
				PRE	-	-	-	-	-	-	-	-	-	-	-	-
C-F-2	100245		ISI-13142-18-B	ISI	-	-	-	-	-	-	-	-	-	-	-	-
C5.51	W-33		Pipe-to-Tee	AUG	-	-	-	-	-	-	-	-	-	-	-	-
2	RHR Discharge B			OWN	-	-	-	-	-	-	-	-	-	-	-	-
				PRE	-	-	-	-	-	-	-	-	-	-	-	-

MONTICELLO Nuclear Generating Plant
3rd Interval ISI Plan Rev. 3 June 1, 1992 to May 31, 2002

Category, ItemNO, Class	Summary / CompID / System	Scope / Method / Procedure	Iso No. Comp. Desc. Code Case /Note		Period 1				Period 2				Period 3			
					1	2	3	4	1	2	3	4	1	2	3	4
F-B	100246	ISI/VT/ISI-VT-2.0	ISI-13142-18-C	ISI	c	-	-	-	-	-	-	-	-	-	-	-
F-A,B,C	H- 1		Strut / Clamp	AUG	-	-	-	-	-	-	-	-	-	-	-	-
2	RHR Discharge B			OWN	-	-	-	-	-	-	-	-	-	-	-	-
				PRE	-	-	-	-	-	-	-	-	-	-	-	-
F-C	100247	ISI/VT/ISI-VT-2.0	ISI-13142-18-C	ISI	-	-	-	-	-	-	-	-	-	s	-	-
F-A,B,C	H- 2		Spring / Clamp	AUG	-	-	-	-	-	-	-	-	-	-	-	-
2	RHR Discharge B			OWN	-	-	-	-	-	-	-	-	-	-	-	-
				PRE	-	-	-	-	-	-	-	-	-	-	-	-
F-C	100248	ISI/VT/ISI-VT-2.0	ISI-13142-18-C	ISI	-	-	-	-	c	-	-	-	-	b	-	-
F-A,B,C	H- 3		Spring / Clamp	AUG	-	-	-	-	-	-	-	-	-	-	-	-
2	RHR Discharge B			OWN	-	-	-	-	-	-	-	-	-	-	-	-
				PRE	-	-	-	-	-	-	-	-	-	-	-	-
C-F-2	100249	ISI/MT/ISI-MT-1	ISI-13142-18-C	ISI	-	-	-	-	-	-	-	-	-	s	-	-
C5.51	W- 1	ISI/UT/ISI-UT-1	Nozzle-to-Elbow	AUG	-	-	-	-	-	-	-	-	-	-	-	-
2	RHR Discharge B			OWN	-	-	-	-	-	-	-	-	-	-	-	-
				PRE	-	-	-	-	-	-	-	-	-	-	-	-
C-F-2	100250		ISI-13142-18-C	ISI	-	-	-	-	-	-	-	-	-	-	-	-
C5.51	W- 2		Elbow-to-Pipe	AUG	-	-	-	-	-	-	-	-	-	-	-	-
2	RHR Discharge B			OWN	-	-	-	-	-	-	-	-	-	-	-	-
				PRE	-	-	-	-	-	-	-	-	-	-	-	-
C-F-2	100251		ISI-13142-18-C	ISI	-	-	-	-	-	-	-	-	-	-	-	-
C5.51	W- 3		Pipe-to-Elbow	AUG	-	-	-	-	-	-	-	-	-	-	-	-
2	RHR Discharge B			OWN	-	-	-	-	-	-	-	-	-	-	-	-
				PRE	-	-	-	-	-	-	-	-	-	-	-	-
C-F-2	100252		ISI-13142-18-C	ISI	-	-	-	-	-	-	-	-	-	-	-	-
C5.51	W- 4		Elbow-to-Pipe	AUG	-	-	-	-	-	-	-	-	-	-	-	-
2	RHR Discharge B			OWN	-	-	-	-	-	-	-	-	-	-	-	-
				PRE	-	-	-	-	-	-	-	-	-	-	-	-
C-F-2	100253	ISI/MT/ISI-MT-1	ISI-13142-18-C	ISI	-	-	-	-	-	c	-	-	-	b	-	-
C5.51	W- 5	ISI/UT/ISI-UT-1	Pipe-to-Elbow	AUG	-	-	-	-	-	-	-	-	-	-	-	-
2	RHR Discharge B			OWN	-	-	-	-	-	-	-	-	-	-	-	-
				PRE	-	-	-	-	-	-	-	-	-	-	-	-
C-F-2	100254	ISI/MT/ISI-MT-1	ISI-13142-18-C	ISI	-	-	-	-	-	c	-	-	-	b	-	-
C5.51	W- 6	ISI/UT/ISI-UT-1	Elbow-to-Pipe	AUG	-	-	-	-	-	-	-	-	-	-	-	-
2	RHR Discharge B			OWN	-	-	-	-	-	-	-	-	-	-	-	-
				PRE	-	-	-	-	-	-	-	-	-	-	-	-
C-F-2	100255		ISI-13142-18-C	ISI	-	-	-	-	-	-	-	-	-	-	-	-
C5.51	W- 7		Pipe-to-Valve	AUG	-	-	-	-	-	-	-	-	-	-	-	-
2	RHR Discharge B			OWN	-	-	-	-	-	-	-	-	-	-	-	-
				PRE	-	-	-	-	-	-	-	-	-	-	-	-

MONTICELLO Nuclear Generating Plant
3rd Interval ISI Plan Rev. 3 June 1, 1992 to May 31, 2002

Category, ItemNO, Class	Summary / CompID / System	Scope / Method / Procedure	Iso No. Comp. Desc. Code Case /Note		Period 1				Period 2				Period 3			
					1	2	3	4	1	2	3	4	1	2	3	4
C-F-2	100256		ISI-13142-18-C	ISI	-	-	-	-	-	-	-	-	-	-	-	-
C5.51	W- 8		Valve-to-Elbow	AUG	-	-	-	-	-	-	-	-	-	-	-	-
2	RHR Discharge B			OWN	-	-	-	-	-	-	-	-	-	-	-	-
				PRE	-	-	-	-	-	-	-	-	-	-	-	-
C-F-2	100257		ISI-13142-18-C	ISI	-	-	-	-	-	-	-	-	-	-	-	-
C5.51	W- 9		Elbow-to-Pipe	AUG	-	-	-	-	-	-	-	-	-	-	-	-
2	RHR Discharge B			OWN	-	-	-	-	-	-	-	-	-	-	-	-
				PRE	-	-	-	-	-	-	-	-	-	-	-	-
C-F-2	100258		ISI-13142-18-C	ISI	-	-	-	-	-	-	-	-	-	-	-	-
C5.51	W-10		Pipe-to-Tee	AUG	-	-	-	-	-	-	-	-	-	-	-	-
2	RHR Discharge B			OWN	-	-	-	-	-	-	-	-	-	-	-	-
				PRE	-	-	-	-	-	-	-	-	-	-	-	-
C-F-2	100259		ISI-13142-18-C	ISI	-	-	-	-	-	-	-	-	-	-	-	-
C5.51	W-11		Tee-to-Pipe	AUG	-	-	-	-	-	-	-	-	-	-	-	-
2	RHR Discharge B			OWN	-	-	-	-	-	-	-	-	-	-	-	-
				PRE	-	-	-	-	-	-	-	-	-	-	-	-
C-F-2	100260		ISI-13142-18-C	ISI	-	-	-	-	-	-	-	-	-	-	-	-
C5.51	W-12		Pipe-to-Elbow	AUG	-	-	-	-	-	-	-	-	-	-	-	-
2	RHR Discharge B			OWN	-	-	-	-	-	-	-	-	-	-	-	-
				PRE	-	-	-	-	-	-	-	-	-	-	-	-
C-F-2	100261		ISI-13142-18-C	ISI	-	-	-	-	-	-	-	-	-	-	-	-
C5.51	W-13		Elbow-to-Pipe	AUG	-	-	-	-	-	-	-	-	-	-	-	-
2	RHR Discharge B			OWN	-	-	-	-	-	-	-	-	-	-	-	-
				PRE	-	-	-	-	-	-	-	-	-	-	-	-
C-F-2	100262		ISI-13142-18-C	ISI	-	-	-	-	-	-	-	-	-	-	-	-
C5.51	W-14		Pipe-to-Tee	AUG	-	-	-	-	-	-	-	-	-	-	-	-
2	RHR Discharge B			OWN	-	-	-	-	-	-	-	-	-	-	-	-
				PRE	-	-	-	-	-	-	-	-	-	-	-	-
F-B	100263	ISI/VT/ISI-VT-2.0	ISI-13142-19-A	ISI	c	-	-	-	B	B	-	-	-	-	-	-
F-A,B,C	H- 1		Snubber / Clamp	AUG	-	-	-	-	-	-	-	-	-	-	-	-
2	HPCI Steam Disch			OWN	-	-	-	-	-	-	-	-	-	-	-	-
				PRE	-	-	-	-	-	-	-	-	-	-	-	-
F-B	100264	ISI/VT/ISI-VT-2.0	ISI-13142-19-A	ISI	c	-	-	-	B	B	-	-	b	-	-	-
F-A,B,C	H- 2		Dbl Snubber / Clamp	AUG	-	-	-	-	-	-	-	-	-	-	-	-
2	HPCI Steam Disch			OWN	-	-	-	-	-	-	-	-	-	-	-	-
				PRE	-	-	-	-	-	-	-	-	-	-	-	-
C-C	100265	ISI/VT/ISI-VT-2.0	ISI-13142-19-A	ISI	-	c	-	-	-	-	-	-	e	-	-	-
C3.20	H- 3	ISI/MT/ISI-MT-1.0	Dbl Spring / 4 Lugs	AUG	-	-	-	-	-	-	-	-	-	-	-	-
2	HPCI Steam Disch			OWN	-	-	-	-	-	-	-	-	-	-	-	-
				PRE	-	-	-	-	-	-	-	-	-	-	-	-

MONTICELLO Nuclear Generating Plant
3rd Interval ISI Plan Rev. 3 June 1, 1992 to May 31, 2002

Category, ItemNO, Class	Summary / CompID / System	Scope / Method / Procedure	Iso No. Comp. Desc. Code Case /Note		Period 1				Period 2				Period 3			
					1	2	3	4	1	2	3	4	1	2	3	4
F-B	100267		ISI-13142-19-A	ISI	-	-	-	-	-	-	-	-	-	-	-	-
F-A,B,C	H- 4		Strut / Clamp	AUG	-	-	-	-	-	-	-	-	-	-	-	-
2	HPCI Steam Disch			OWN	-	-	-	-	-	-	-	-	-	-	-	-
				PRE	-	-	-	-	-	-	-	-	-	-	-	-
F-C	100268	ISI/VT/ISI-VT-2.0	ISI-13142-19-A	ISI	-	-	-	-	-	-	-	-	s	-	-	-
F-A,B,C	H- 5		Spring / Clamp	AUG	-	-	-	-	-	-	-	-	-	-	-	-
2	HPCI Steam Disch			OWN	-	-	-	-	-	-	-	-	-	-	-	-
				PRE	-	-	-	-	-	-	-	-	-	-	-	-
F-B	100269	ISI/VT/ISI-VT-2.0	ISI-13142-19-A	ISI	-	-	-	-	-	-	-	-	s	-	-	-
F-A,B,C	H- 6		Strut / Clamp	AUG	-	-	-	-	-	-	-	-	-	-	-	-
2	HPCI Steam Disch			OWN	-	-	-	-	-	-	-	-	-	-	-	-
				PRE	-	-	-	-	-	-	-	-	-	-	-	-
C-C	100270	ISI/MT/ISI-MT-1	ISI-13142-19-A	ISI	-	-	-	-	-	-	-	-	s	-	-	-
C3.20	H- 7	ISI/VT/ISI-VT-2.0	Dbl Spring / 4 Lugs	AUG	-	-	-	-	-	-	-	-	-	-	-	-
2	HPCI Steam Disch			OWN	-	-	-	-	-	-	-	-	-	-	-	-
				PRE	-	-	-	-	-	-	-	-	-	-	-	-
F-B	100272	ISI/VT/ISI-VT-2.0	ISI-13142-19-A	ISI	-	-	-	-	-	-	-	-	s	-	-	-
F-A,B,C	H- 8		Strut / Clamp	AUG	-	-	-	-	-	-	-	-	-	-	-	-
2	HPCI Steam Disch			OWN	-	-	-	-	-	-	-	-	-	-	-	-
				PRE	-	-	-	-	-	-	-	-	-	-	-	-
F-B	100273	ISI/VT/ISI-VT-2.0	ISI-13142-19-A	ISI	-	-	-	-	-	-	-	-	s	-	-	-
F-A,B,C	H- 9		Strut / Clamp	AUG	-	-	-	-	-	-	-	-	-	-	-	-
2	HPCI Steam Disch			OWN	-	-	-	-	-	-	-	-	-	-	-	-
				PRE	-	-	-	-	-	-	-	-	-	-	-	-
C-F-2	100274		ISI-13142-19-A	ISI	-	-	-	-	-	-	-	-	-	-	-	-
C5.51	W- 1		Cap-to-Pipe	AUG	-	-	-	-	-	-	-	-	-	-	-	-
2	HPCI Steam Disch			OWN	-	-	-	-	-	-	-	-	-	-	-	-
				PRE	-	-	-	-	-	-	-	-	-	-	-	-
C-F-2	100275		ISI-13142-19-A	ISI	-	-	-	-	-	-	-	-	-	-	-	-
C5.51	W- 2		Tee-to-Pipe	AUG	-	-	-	-	-	-	-	-	-	-	-	-
2	HPCI Steam Disch			OWN	-	-	-	-	-	-	-	-	-	-	-	-
				PRE	-	-	-	-	-	-	-	-	-	-	-	-
C-F-2	100276		ISI-13142-19-A	ISI	-	-	-	-	-	-	-	-	-	-	-	-
C5.51	W- 3		Flange-to-Tee	AUG	-	-	-	-	-	-	-	-	-	-	-	-
2	HPCI Steam Disch			OWN	-	-	-	-	-	-	-	-	-	-	-	-
				PRE	-	-	-	-	-	-	-	-	-	-	-	-
C-F-2	100277		ISI-13142-19-A	ISI	-	-	-	-	-	-	-	-	-	-	-	-
C5.51	W- 4		Tee-to-Reducer	AUG	-	-	-	-	-	-	-	-	-	-	-	-
2	HPCI Steam Disch			OWN	-	-	-	-	-	-	-	-	-	-	-	-
				PRE	-	-	-	-	-	-	-	-	-	-	-	-

MONTICELLO Nuclear Generating Plant
3rd Interval ISI Plan Rev. 3 June 1, 1992 to May 31, 2002

Category, ItemNO, Class	Summary / CompID / System	Scope / Method / Procedure	Iso No. Comp. Desc. Code Case /Note		Period 1				Period 2				Period 3			
					1	2	3	4	1	2	3	4	1	2	3	4
C-F-2	100278		ISI-13142-19-A	ISI	-	-	-	-	-	-	-	-	-	-	-	-
C5.51	W- 5		Reducer-to-Elbow	AUG	-	-	-	-	-	-	-	-	-	-	-	-
2	HPCI Steam Disch			OWN	-	-	-	-	-	-	-	-	-	-	-	-
				PRE	-	-	-	-	-	-	-	-	-	-	-	-
C-F-2	100279		ISI-13142-19-A	ISI	-	-	-	-	-	-	-	-	-	-	-	-
C5.51	W- 6		Elbow-to-Pipe	AUG	-	-	-	-	-	-	-	-	-	-	-	-
2	HPCI Steam Disch			OWN	-	-	-	-	-	-	-	-	-	-	-	-
				PRE	-	-	-	-	-	-	-	-	-	-	-	-
C-F-2	100280	ISI/MT/ISI-MT-1	ISI-13142-19-A	ISI	c	-	-	-	-	-	-	-	-	-	-	-
C5.51	W- 7	ISI/UT/ISI-UT-1	Pipe-to-Elbow	AUG	-	-	-	-	-	-	-	-	-	-	-	-
2	HPCI Steam Disch			OWN	-	-	-	-	-	-	-	-	-	-	-	-
				PRE	-	-	-	-	-	-	-	-	-	-	-	-
C-F-2	100281		ISI-13142-19-A	ISI	-	-	-	-	-	-	-	-	-	-	-	-
C5.51	W- 8		Elbow-to-Pipe	AUG	-	-	-	-	-	-	-	-	-	-	-	-
2	HPCI Steam Disch			OWN	-	-	-	-	-	-	-	-	-	-	-	-
				PRE	-	-	-	-	-	-	-	-	-	-	-	-
C-F-2	100282		ISI-13142-19-A	ISI	-	-	-	-	-	-	-	-	-	-	-	-
C5.51	W- 9		Pipe-to-Elbow	AUG	-	-	-	-	-	-	-	-	-	-	-	-
2	HPCI Steam Disch			OWN	-	-	-	-	-	-	-	-	-	-	-	-
				PRE	-	-	-	-	-	-	-	-	-	-	-	-
C-F-2	100283		ISI-13142-19-A	ISI	-	-	-	-	-	-	-	-	-	-	-	-
C5.51	W-10		Elbow-to-Pipe	AUG	-	-	-	-	-	-	-	-	-	-	-	-
2	HPCI Steam Disch			OWN	-	-	-	-	-	-	-	-	-	-	-	-
				PRE	-	-	-	-	-	-	-	-	-	-	-	-
C-F-2	100284		ISI-13142-19-A	ISI	-	-	-	-	-	-	-	-	-	-	-	-
C5.51	W-11		Pipe-to-Tee	AUG	-	-	-	-	-	-	-	-	-	-	-	-
2	HPCI Steam Disch			OWN	-	-	-	-	-	-	-	-	-	-	-	-
				PRE	-	-	-	-	-	-	-	-	-	-	-	-
C-F-2	100285		ISI-13142-19-A	ISI	-	-	-	-	-	-	-	-	-	-	-	-
C5.51	W-12		Tee-to-Flange	AUG	-	-	-	-	-	-	-	-	-	-	-	-
2	HPCI Steam Disch			OWN	-	-	-	-	-	-	-	-	-	-	-	-
				PRE	-	-	-	-	-	-	-	-	-	-	-	-
C-F-2	100286		ISI-13142-19-A	ISI	-	-	-	-	-	-	-	-	-	-	-	-
C5.51	W-13		Flange-to-Pipe	AUG	-	-	-	-	-	-	-	-	-	-	-	-
2	HPCI Steam Disch			OWN	-	-	-	-	-	-	-	-	-	-	-	-
				PRE	-	-	-	-	-	-	-	-	-	-	-	-
C-F-2	100287		ISI-13142-19-A	ISI	-	-	-	-	-	-	-	-	-	-	-	-
C5.51	W-14		Pipe-to-Flange	AUG	-	-	-	-	-	-	-	-	-	-	-	-
2	HPCI Steam Disch			OWN	-	-	-	-	-	-	-	-	-	-	-	-
				PRE	-	-	-	-	-	-	-	-	-	-	-	-

MONTICELLO Nuclear Generating Plant
3rd Interval ISI Plan Rev. 3 June 1, 1992 to May 31, 2002

Category, ItemNO, Class	Summary / CompID / System	Scope / Method / Procedure	Iso No. Comp. Desc. Code Case /Note		Period 1				Period 2				Period 3			
					1	2	3	4	1	2	3	4	1	2	3	4
C-F-2	100288		ISI-13142-19-A	ISI	-	-	-	-	-	-	-	-	-	-	-	-
C5.51	W-15		Tee-to-Pipe	AUG	-	-	-	-	-	-	-	-	-	-	-	-
2	HPCI Steam Disch			OWN	-	-	-	-	-	-	-	-	-	-	-	-
				PRE	-	-	-	-	-	-	-	-	-	-	-	-
C-F-2	100289		ISI-13142-19-A	ISI	-	-	-	-	-	-	-	-	-	-	-	-
C5.51	W-16		Pipe-to-Elbow	AUG	-	-	-	-	-	-	-	-	-	-	-	-
2	HPCI Steam Disch			OWN	-	-	-	-	-	-	-	-	-	-	-	-
				PRE	-	-	-	-	-	-	-	-	-	-	-	-
C-F-2	100290		ISI-13142-19-A	ISI	-	-	-	-	-	-	-	-	-	-	-	-
C5.51	W-17		Elbow-to-Pipe	AUG	-	-	-	-	-	-	-	-	-	-	-	-
2	HPCI Steam Disch			OWN	-	-	-	-	-	-	-	-	-	-	-	-
				PRE	-	-	-	-	-	-	-	-	-	-	-	-
C-F-2	100291		ISI-13142-19-A	ISI	-	-	-	-	-	-	-	-	-	-	-	-
C5.51	W-18		Pipe-to-Elbow	AUG	-	-	-	-	-	-	-	-	-	-	-	-
2	HPCI Steam Disch			OWN	-	-	-	-	-	-	-	-	-	-	-	-
				PRE	-	-	-	-	-	-	-	-	-	-	-	-
C-F-2	100292	ISI/MT/ISI-MT-1	ISI-13142-19-A	ISI	-	-	-	-	-	-	-	-	s	-	-	-
C5.51	W-19	ISI/UT/ISI-UT-1	Elbow-to-Valve	AUG	-	-	-	-	-	-	-	-	-	-	-	-
2	HPCI Steam Disch			OWN	-	-	-	-	-	-	-	-	-	-	-	-
				PRE	-	-	-	-	-	-	-	-	-	-	-	-
C-F-2	100293		ISI-13142-19-A	ISI	-	-	-	-	-	-	-	-	-	-	-	-
C5.51	W-20		Valve-to-Pipe	AUG	-	-	-	-	-	-	-	-	-	-	-	-
2	HPCI Steam Disch			OWN	-	-	-	-	-	-	-	-	-	-	-	-
				PRE	-	-	-	-	-	-	-	-	-	-	-	-
C-F-2	100294		ISI-13142-19-A	ISI	-	-	-	-	-	-	-	-	-	-	-	-
C5.51	W-21		Pipe-to-Valve	AUG	-	-	-	-	-	-	-	-	-	-	-	-
2	HPCI Steam Disch			OWN	-	-	-	-	-	-	-	-	-	-	-	-
				PRE	-	-	-	-	-	-	-	-	-	-	-	-
C-F-2	100295		ISI-13142-19-A	ISI	-	-	-	-	-	-	-	-	-	-	-	-
C5.51	W-22		Valve-to-Pipe	AUG	-	-	-	-	-	-	-	-	-	-	-	-
2	HPCI Steam Disch			OWN	-	-	-	-	-	-	-	-	-	-	-	-
				PRE	-	-	-	-	-	-	-	-	-	-	-	-
C-F-2	100296		ISI-13142-19-A	ISI	-	-	-	-	-	-	-	-	-	-	-	-
C5.51	W-23		Pipe-to-Valve	AUG	-	-	-	-	-	-	-	-	-	-	-	-
2	HPCI Steam Disch			OWN	-	-	-	-	-	-	-	-	-	-	-	-
				PRE	-	-	-	-	-	-	-	-	-	-	-	-
C-F-2	100297		ISI-13142-19-A	ISI	-	-	-	-	-	-	-	-	-	-	-	-
C5.51	W-24		Valve-to-Pipe	AUG	-	-	-	-	-	-	-	-	-	-	-	-
2	HPCI Steam Disch			OWN	-	-	-	-	-	-	-	-	-	-	-	-
				PRE	-	-	-	-	-	-	-	-	-	-	-	-

MONTICELLO Nuclear Generating Plant
3rd Interval ISI Plan Rev. 3 June 1, 1992 to May 31, 2002

Category, ItemNO, Class	Summary / CompID / System	Scope / Method / Procedure	Iso No. Comp. Desc. Code Case /Note		Period 1				Period 2				Period 3			
					1	2	3	4	1	2	3	4	1	2	3	4
C-F-2	100298		ISI-13142-19-A	ISI	-	-	-	-	-	-	-	-	-	-	-	-
C5.51	W-25		Pipe-to-Reducer	AUG	-	-	-	-	-	-	-	-	-	-	-	-
2	HPCI Steam Disch			OWN	-	-	-	-	-	-	-	-	-	-	-	-
				PRE	-	-	-	-	-	-	-	-	-	-	-	-
C-F-2	100299		ISI-13142-19-A	ISI	-	-	-	-	-	-	-	-	-	-	-	-
C5.51	W-26		Reducer-to-Pipe	AUG	-	-	-	-	-	-	-	-	-	-	-	-
2	HPCI Steam Disch			OWN	-	-	-	-	-	-	-	-	-	-	-	-
				PRE	-	-	-	-	-	-	-	-	-	-	-	-
C-F-2	100300		ISI-13142-19-A	ISI	-	-	-	-	-	-	-	-	-	-	-	-
C5.51	W-27		Pipe-to-Elbow	AUG	-	-	-	-	-	-	-	-	-	-	-	-
2	HPCI Steam Disch			OWN	-	-	-	-	-	-	-	-	-	-	-	-
				PRE	-	-	-	-	-	-	-	-	-	-	-	-
C-F-2	100301		ISI-13142-19-A	ISI	-	-	-	-	-	-	-	-	-	-	-	-
C5.51	W-28		Elbow-to-Pipe	AUG	-	-	-	-	-	-	-	-	-	-	-	-
2	HPCI Steam Disch			OWN	-	-	-	-	-	-	-	-	-	-	-	-
				PRE	-	-	-	-	-	-	-	-	-	-	-	-
C-F-2	100302	ISI/MT/ISI-MT-1	ISI-13142-19-A	ISI	-	-	-	-	c	-	-	-	-	-	-	-
C5.51	W-29	ISI/UT/ISI-UT-1	Pipe-to-Torus	AUG	-	-	-	-	-	-	-	-	-	-	-	-
2	HPCI Steam Disch			OWN	-	-	-	-	-	-	-	-	-	-	-	-
				PRE	-	-	-	-	-	-	-	-	-	-	-	-
C-F-2	100303		ISI-13142-19-B	ISI	-	-	-	-	-	-	-	-	-	-	-	-
CX.XX	W- 1		Flange-to-Tee	AUG	-	-	-	-	-	-	-	-	-	-	-	-
2	RCIC Steam Discharge			OWN	-	-	-	-	-	-	-	-	-	-	-	-
				PRE	-	-	-	-	-	-	-	-	-	-	-	-
C-F-2	100304		ISI-13142-19-B	ISI	-	-	-	-	-	-	-	-	-	-	-	-
CX.XX	W- 2		Tee-to-Endcap	AUG	-	-	-	-	-	-	-	-	-	-	-	-
2	RCIC Steam Discharge			OWN	-	-	-	-	-	-	-	-	-	-	-	-
				PRE	-	-	-	-	-	-	-	-	-	-	-	-
C-F-2	100305		ISI-13142-19-B	ISI	-	-	-	-	-	-	-	-	-	-	-	-
CX.XX	W- 3		Tee-to-Pipe	AUG	-	-	-	-	-	-	-	-	-	-	-	-
2	RCIC Steam Discharge			OWN	-	-	-	-	-	-	-	-	-	-	-	-
				PRE	-	-	-	-	-	-	-	-	-	-	-	-
C-F-2	100306		ISI-13142-19-B	ISI	-	-	-	-	-	-	-	-	-	-	-	-
CX.XX	W- 4		Pipe-to-Elbow	AUG	-	-	-	-	-	-	-	-	-	-	-	-
2	RCIC Steam Discharge			OWN	-	-	-	-	-	-	-	-	-	-	-	-
				PRE	-	-	-	-	-	-	-	-	-	-	-	-
C-F-2	100307		ISI-13142-19-B	ISI	-	-	-	-	-	-	-	-	-	-	-	-
CX.XX	W- 5		Elbow-to-Pipe	AUG	-	-	-	-	-	-	-	-	-	-	-	-
2	RCIC Steam Discharge			OWN	-	-	-	-	-	-	-	-	-	-	-	-
				PRE	-	-	-	-	-	-	-	-	-	-	-	-

MONTICELLO Nuclear Generating Plant
3rd Interval ISI Plan Rev. 3 June 1, 1992 to May 31, 2002

Category, ItemNO, Class	Summary / CompID / System	Scope / Method / Procedure	Iso No. Comp. Desc. Code Case /Note		Period 1				Period 2				Period 3			
					1	2	3	4	1	2	3	4	1	2	3	4
C-F-2	100308		ISI-13142-19-B	ISI	-	-	-	-	-	-	-	-	-	-	-	-
CX.XX	W- 6		Pipe-to-Elbow	AUG	-	-	-	-	-	-	-	-	-	-	-	-
2	RCIC Steam Discharge			OWN	-	-	-	-	-	-	-	-	-	-	-	-
				PRE	-	-	-	-	-	-	-	-	-	-	-	-
C-F-2	100309		ISI-13142-19-B	ISI	-	-	-	-	-	-	-	-	-	-	-	-
CX.XX	W- 7		Elbow-to-Tee	AUG	-	-	-	-	-	-	-	-	-	-	-	-
2	RCIC Steam Discharge			OWN	-	-	-	-	-	-	-	-	-	-	-	-
				PRE	-	-	-	-	-	-	-	-	-	-	-	-
C-F-2	100310		ISI-13142-19-B	ISI	-	-	-	-	-	-	-	-	-	-	-	-
CX.XX	W- 8		Tee-to-Flange	AUG	-	-	-	-	-	-	-	-	-	-	-	-
2	RCIC Steam Discharge			OWN	-	-	-	-	-	-	-	-	-	-	-	-
				PRE	-	-	-	-	-	-	-	-	-	-	-	-
C-F-2	100311		ISI-13142-19-B	ISI	-	-	-	-	-	-	-	-	-	-	-	-
CX.XX	W- 9		Tee-to-Pipe	AUG	-	-	-	-	-	-	-	-	-	-	-	-
2	RCIC Steam Discharge			OWN	-	-	-	-	-	-	-	-	-	-	-	-
				PRE	-	-	-	-	-	-	-	-	-	-	-	-
C-F-2	100312		ISI-13142-19-B	ISI	-	-	-	-	-	-	-	-	-	-	-	-
CX.XX	W-10		Pipe-to-Valve	AUG	-	-	-	-	-	-	-	-	-	-	-	-
2	RCIC Steam Discharge			OWN	-	-	-	-	-	-	-	-	-	-	-	-
				PRE	-	-	-	-	-	-	-	-	-	-	-	-
C-F-2	100313		ISI-13142-19-B	ISI	-	-	-	-	-	-	-	-	-	-	-	-
CX.XX	W-11		Valve-to-Pipe	AUG	-	-	-	-	-	-	-	-	-	-	-	-
2	RCIC Steam Discharge			OWN	-	-	-	-	-	-	-	-	-	-	-	-
				PRE	-	-	-	-	-	-	-	-	-	-	-	-
C-F-2	100314		ISI-13142-19-B	ISI	-	-	-	-	-	-	-	-	-	-	-	-
CX.XX	W-12		Pipe-to-Pipe	AUG	-	-	-	-	-	-	-	-	-	-	-	-
2	RCIC Steam Discharge			OWN	-	-	-	-	-	-	-	-	-	-	-	-
				PRE	-	-	-	-	-	-	-	-	-	-	-	-
C-F-2	100315		ISI-13142-19-B	ISI	-	-	-	-	-	-	-	-	-	-	-	-
CX.XX	W-13		Pipe-to-Valve	AUG	-	-	-	-	-	-	-	-	-	-	-	-
2	RCIC Steam Discharge			OWN	-	-	-	-	-	-	-	-	-	-	-	-
				PRE	-	-	-	-	-	-	-	-	-	-	-	-
C-F-2	100316		ISI-13142-19-B	ISI	-	-	-	-	-	-	-	-	-	-	-	-
CX.XX	W-14		Valve-to-Elbow	AUG	-	-	-	-	-	-	-	-	-	-	-	-
2	RCIC Steam Discharge			OWN	-	-	-	-	-	-	-	-	-	-	-	-
				PRE	-	-	-	-	-	-	-	-	-	-	-	-
C-F-2	100317		ISI-13142-19-B	ISI	-	-	-	-	-	-	-	-	-	-	-	-
CX.XX	W-15		Elbow-to-Valve	AUG	-	-	-	-	-	-	-	-	-	-	-	-
2	RCIC Steam Discharge			OWN	-	-	-	-	-	-	-	-	-	-	-	-
				PRE	-	-	-	-	-	-	-	-	-	-	-	-

MONTICELLO Nuclear Generating Plant
3rd Interval ISI Plan Rev. 3 June 1, 1992 to May 31, 2002

Category, ItemNO, Class	Summary / CompID / System	Scope / Method / Procedure	Iso No. Comp. Desc. Code Case /Note		Period 1				Period 2				Period 3			
					1	2	3	4	1	2	3	4	1	2	3	4
C-F-2	100318		ISI-13142-19-B	ISI	-	-	-	-	-	-	-	-	-	-	-	-
CX.XX	W-16		Valve-to-Pipe	AUG	-	-	-	-	-	-	-	-	-	-	-	-
2	RCIC Steam Discharge			OWN	-	-	-	-	-	-	-	-	-	-	-	-
				PRE	-	-	-	-	-	-	-	-	-	-	-	-
C-F-2	100319		ISI-13142-19-B	ISI	-	-	-	-	-	-	-	-	-	-	-	-
CX.XX	W-17		Pipe-to-Elbow	AUG	-	-	-	-	-	-	-	-	-	-	-	-
2	RCIC Steam Discharge			OWN	-	-	-	-	-	-	-	-	-	-	-	-
				PRE	-	-	-	-	-	-	-	-	-	-	-	-
C-F-2	100320		ISI-13142-19-B	ISI	-	-	-	-	-	-	-	-	-	-	-	-
CX.XX	W-18		Elbow-to-Pipe	AUG	-	-	-	-	-	-	-	-	-	-	-	-
2	RCIC Steam Discharge			OWN	-	-	-	-	-	-	-	-	-	-	-	-
				PRE	-	-	-	-	-	-	-	-	-	-	-	-
C-F-2	100321		ISI-13142-19-B	ISI	-	-	-	-	-	-	-	-	-	-	-	-
CX.XX	W-19		Pipe-to-Elbow	AUG	-	-	-	-	-	-	-	-	-	-	-	-
2	RCIC Steam Discharge			OWN	-	-	-	-	-	-	-	-	-	-	-	-
				PRE	-	-	-	-	-	-	-	-	-	-	-	-
C-F-2	100322		ISI-13142-19-B	ISI	-	-	-	-	-	-	-	-	-	-	-	-
CX.XX	W-20		Elbow-to-Pipe	AUG	-	-	-	-	-	-	-	-	-	-	-	-
2	RCIC Steam Discharge			OWN	-	-	-	-	-	-	-	-	-	-	-	-
				PRE	-	-	-	-	-	-	-	-	-	-	-	-
C-F-2	100323		ISI-13142-19-B	ISI	-	-	-	-	-	-	-	-	-	-	-	-
CX.XX	W-21		Pipe-to-Pipe	AUG	-	-	-	-	-	-	-	-	-	-	-	-
2	RCIC Steam Discharge			OWN	-	-	-	-	-	-	-	-	-	-	-	-
				PRE	-	-	-	-	-	-	-	-	-	-	-	-
C-F-2	100324		ISI-13142-19-B	ISI	-	-	-	-	-	-	-	-	-	-	-	-
CX.XX	W-22		Pipe-to-Elbow	AUG	-	-	-	-	-	-	-	-	-	-	-	-
2	RCIC Steam Discharge			OWN	-	-	-	-	-	-	-	-	-	-	-	-
				PRE	-	-	-	-	-	-	-	-	-	-	-	-
C-F-2	100325		ISI-13142-19-B	ISI	-	-	-	-	-	-	-	-	-	-	-	-
CX.XX	W-23		Elbow-to-Pipe	AUG	-	-	-	-	-	-	-	-	-	-	-	-
2	RCIC Steam Discharge			OWN	-	-	-	-	-	-	-	-	-	-	-	-
				PRE	-	-	-	-	-	-	-	-	-	-	-	-
C-F-2	100326		ISI-13142-19-B	ISI	-	-	-	-	-	-	-	-	-	-	-	-
CX.XX	W-24		Pipe-to-Elbow	AUG	-	-	-	-	-	-	-	-	-	-	-	-
2	RCIC Steam Discharge			OWN	-	-	-	-	-	-	-	-	-	-	-	-
				PRE	-	-	-	-	-	-	-	-	-	-	-	-
C-F-2	100327		ISI-13142-19-B	ISI	-	-	-	-	-	-	-	-	-	-	-	-
CX.XX	W-25		Elbow-to-Pipe	AUG	-	-	-	-	-	-	-	-	-	-	-	-
2	RCIC Steam Discharge			OWN	-	-	-	-	-	-	-	-	-	-	-	-
				PRE	-	-	-	-	-	-	-	-	-	-	-	-

MONTICELLO Nuclear Generating Plant
3rd Interval ISI Plan Rev. 3 June 1, 1992 to May 31, 2002

Category, ItemNO, Class	Summary / CompID / System	Scope / Method / Procedure	Iso No. Comp. Desc. Code Case /Note		Period 1				Period 2				Period 3			
					1	2	3	4	1	2	3	4	1	2	3	4
C-F-2	100328		ISI-13142-19-B	ISI	-	-	-	-	-	-	-	-	-	-	-	-
CX.XX	W-26		Pipe-to-Elbow	AUG	-	-	-	-	-	-	-	-	-	-	-	-
2	RCIC Steam Discharge			OWN	-	-	-	-	-	-	-	-	-	-	-	-
				PRE	-	-	-	-	-	-	-	-	-	-	-	-
C-F-2	100329		ISI-13142-19-B	ISI	-	-	-	-	-	-	-	-	-	-	-	-
CX.XX	W-27		Elbow-to-Pipe	AUG	-	-	-	-	-	-	-	-	-	-	-	-
2	RCIC Steam Discharge			OWN	-	-	-	-	-	-	-	-	-	-	-	-
				PRE	-	-	-	-	-	-	-	-	-	-	-	-
C-F-2	100330	ISI/MT/ISI-MT-1	ISI-13142-19-B	ISI	-	-	-	-	-	c	-	-	-	-	-	-
C5.51	W-28	ISI/UT/ISI-UT-1	Pipe-to-Torus Pent.	AUG	-	-	-	-	-	-	-	-	-	-	-	-
2	RCIC Steam Discharge			OWN	-	-	-	-	-	-	-	-	-	-	-	-
				PRE	-	-	-	-	-	-	-	-	-	-	-	-
F-C	100331		ISI-13142-20-A	ISI	-	-	-	-	-	-	-	-	-	-	-	-
F-A,B,C	H- 1		Variable Spr / Slide	AUG	-	-	-	-	-	-	-	-	-	-	-	-
2	Core Spray A			OWN	-	-	-	-	-	-	-	-	-	-	-	-
				PRE	-	-	-	-	-	-	-	-	-	-	-	-
F-B	100332		ISI-13142-20-A	ISI	-	-	-	-	-	-	-	-	-	-	-	-
F-A,B,C	H- 2		Slide	AUG	-	-	-	-	-	-	-	-	-	-	-	-
2	Core Spray A			OWN	-	-	-	-	-	-	-	-	-	-	-	-
				PRE	-	-	-	-	-	-	-	-	-	-	-	-
F-B	100333	ISI/VT/ISI-VT-2.0	ISI-13142-20-A	ISI	c	B	-	-	-	-	-	-	-	-	-	-
F-A,B,C	H- 3		Snubber	AUG	-	-	-	-	-	-	-	-	-	-	-	-
2	Core Spray A			OWN	-	-	-	-	-	-	-	-	-	-	-	-
				PRE	-	-	-	-	-	-	-	-	-	-	-	-
F-C	100334		ISI-13142-20-A	ISI	-	-	-	-	-	-	-	-	-	-	-	-
F-A,B,C	H- 4		Variable Spr/Slide	AUG	-	-	-	-	-	-	-	-	-	-	-	-
2	Core Spray A			OWN	-	-	-	-	-	-	-	-	-	-	-	-
				PRE	-	-	-	-	-	-	-	-	-	-	-	-
F-B	100335		ISI-13142-20-A	ISI	-	-	-	-	-	-	-	-	-	-	-	-
F-A,B,C	H- 5		Strut / Clamp	AUG	-	-	-	-	-	-	-	-	-	-	-	-
2	Core Spray A			OWN	-	-	-	-	-	-	-	-	-	-	-	-
				PRE	-	-	-	-	-	-	-	-	-	-	-	-
C-F-2	100336	ISI/UT/ISI-UT-1	ISI-13142-20-A	ISI	-	c	-	-	-	-	-	-	-	-	-	-
C5.51	W- 1	ISI/MT/ISI-MT-1	Tor.Penn-to-Elbow	AUG	-	-	-	-	-	-	-	-	-	-	-	-
2	Core Spray A			OWN	-	-	-	-	-	-	-	-	-	-	-	-
				PRE	-	-	-	-	-	-	-	-	-	-	-	-
C-F-2	100337		ISI-13142-20-A	ISI	-	-	-	-	-	-	-	-	-	-	-	-
C5.51	W- 2		Elbow-to-Pipe	AUG	-	-	-	-	-	-	-	-	-	-	-	-
2	Core Spray A			OWN	-	-	-	-	-	-	-	-	-	-	-	-
				PRE	-	-	-	-	-	-	-	-	-	-	-	-

MONTICELLO Nuclear Generating Plant
3rd Interval ISI Plan Rev. 3 June 1, 1992 to May 31, 2002

Category, ItemNO, Class	Summary / CompID / System	Scope / Method / Procedure	Iso No. Comp. Desc. Code Case /Note		Period 1				Period 2				Period 3			
					1	2	3	4	1	2	3	4	1	2	3	4
C-F-2	100338	ISI/MT/ISI-MT-1	ISI-13142-20-A	ISI	-	c	-	-	-	-	-	-	-	-	-	-
C5.51	W- 3	ISI/UT/ISI-UT-1	Pipe-to-Elbow	AUG	-	-	-	-	-	-	-	-	-	-	-	-
2	Core Spray A			OWN	-	-	-	-	-	-	-	-	-	-	-	-
				PRE	-	-	-	-	-	-	-	-	-	-	-	-
C-F-2	100339		ISI-13142-20-A	ISI	-	-	-	-	-	-	-	-	-	-	-	-
C5.51	W- 4		Elbow-to-Pipe	AUG	-	-	-	-	-	-	-	-	-	-	-	-
2	Core Spray A			OWN	-	-	-	-	-	-	-	-	-	-	-	-
				PRE	-	-	-	-	-	-	-	-	-	-	-	-
C-F-2	100340		ISI-13142-20-A	ISI	-	-	-	-	-	-	-	-	-	-	-	-
C5.51	W- 5		Pipe-to-Pipe	AUG	-	-	-	-	-	-	-	-	-	-	-	-
2	Core Spray A			OWN	-	-	-	-	-	-	-	-	-	-	-	-
				PRE	-	-	-	-	-	-	-	-	-	-	-	-
C-F-2	100341		ISI-13142-20-A	ISI	-	-	-	-	-	-	-	-	-	-	-	-
C5.51	W- 6		Pipe-to-Elbow	AUG	-	-	-	-	-	-	-	-	-	-	-	-
2	Core Spray A			OWN	-	-	-	-	-	-	-	-	-	-	-	-
				PRE	-	-	-	-	-	-	-	-	-	-	-	-
C-F-2	100342	ISI/MT/ISI-MT-1	ISI-13142-20-A	ISI	-	c	-	-	-	-	-	-	-	-	-	-
C5.51	W- 7	ISI/UT/ISI-UT-1	Elbow-to-Elbow	AUG	-	-	-	-	-	-	-	-	-	-	-	-
2	Core Spray A			OWN	-	-	-	-	-	-	-	-	-	-	-	-
				PRE	-	-	-	-	-	-	-	-	-	-	-	-
C-F-2	100343		ISI-13142-20-A	ISI	-	-	-	-	-	-	-	-	-	-	-	-
C5.51	W- 8		Elbow-to-Pipe	AUG	-	-	-	-	-	-	-	-	-	-	-	-
2	Core Spray A			OWN	-	-	-	-	-	-	-	-	-	-	-	-
				PRE	-	-	-	-	-	-	-	-	-	-	-	-
C-F-2	100344		ISI-13142-20-A	ISI	-	-	-	-	-	-	-	-	-	-	-	-
C5.51	W- 9		Pipe-to-Valve	AUG	-	-	-	-	-	-	-	-	-	-	-	-
2	Core Spray A			OWN	-	-	-	-	-	-	-	-	-	-	-	-
				PRE	-	-	-	-	-	-	-	-	-	-	-	-
C-F-2	100345		ISI-13142-20-A	ISI	-	-	-	-	-	-	-	-	-	-	-	-
C5.51	W-10		Valve-to-Pipe	AUG	-	-	-	-	-	-	-	-	-	-	-	-
2	Core Spray A			OWN	-	-	-	-	-	-	-	-	-	-	-	-
				PRE	-	-	-	-	-	-	-	-	-	-	-	-
C-F-2	100346		ISI-13142-20-A	ISI	-	-	-	-	-	-	-	-	-	-	-	-
C5.51	W-11		Pipe-to-Valve	AUG	-	-	-	-	-	-	-	-	-	-	-	-
2	Core Spray A			OWN	-	-	-	-	-	-	-	-	-	-	-	-
				PRE	-	-	-	-	-	-	-	-	-	-	-	-
C-F-2	100347		ISI-13142-20-A	ISI	-	-	-	-	-	-	-	-	-	-	-	-
C5.51	W-12		Valve-to-Pipe	AUG	-	-	-	-	-	-	-	-	-	-	-	-
2	Core Spray A			OWN	-	-	-	-	-	-	-	-	-	-	-	-
				PRE	-	-	-	-	-	-	-	-	-	-	-	-

MONTICELLO Nuclear Generating Plant
3rd Interval ISI Plan Rev. 3 June 1, 1992 to May 31, 2002

Category, ItemNO, Class	Summary / CompID / System	Scope / Method / Procedure	Iso No. Comp. Desc. Code Case /Note		Period 1				Period 2				Period 3			
					1	2	3	4	1	2	3	4	1	2	3	4
C-F-2	100348		ISI-13142-20-A	ISI	-	-	-	-	-	-	-	-	-	-	-	-
C5.51	W-13		Pipe-to-Tee	AUG	-	-	-	-	-	-	-	-	-	-	-	-
2	Core Spray A			OWN	-	-	-	-	-	-	-	-	-	-	-	-
				PRE	-	-	-	-	-	-	-	-	-	-	-	-
C-F-2	100349		ISI-13142-20-A	ISI	-	-	-	-	-	-	-	-	-	-	-	-
C5.51	W-14		Tee-to-Pipe	AUG	-	-	-	-	-	-	-	-	-	-	-	-
2	Core Spray A			OWN	-	-	-	-	-	-	-	-	-	-	-	-
				PRE	-	-	-	-	-	-	-	-	-	-	-	-
C-F-2	100350		ISI-13142-20-A	ISI	-	-	-	-	-	-	-	-	-	-	-	-
C5.51	W-15		Pipe-to-Pipe	AUG	-	-	-	-	-	-	-	-	-	-	-	-
2	Core Spray A			OWN	-	-	-	-	-	-	-	-	-	-	-	-
				PRE	-	-	-	-	-	-	-	-	-	-	-	-
C-F-2	100351	ISI/MT/ISI-MT-1	ISI-13142-20-A	ISI	-	c	-	-	-	-	-	-	-	-	-	-
C5.51	W-16	ISI/UT/ISI-UT-1	Pipe-to-Elbow	AUG	-	-	-	-	-	-	-	-	-	-	-	-
2	Core Spray A			OWN	-	-	-	-	-	-	-	-	-	-	-	-
				PRE	-	-	-	-	-	-	-	-	-	-	-	-
C-F-2	100352		ISI-13142-20-A	ISI	-	-	-	-	-	-	-	-	-	-	-	-
C5.51	W-17		Elbow-to-Pipe	AUG	-	-	-	-	-	-	-	-	-	-	-	-
2	Core Spray A			OWN	-	-	-	-	-	-	-	-	-	-	-	-
				PRE	-	-	-	-	-	-	-	-	-	-	-	-
C-F-2	100353		ISI-13142-20-A	ISI	-	-	-	-	-	-	-	-	-	-	-	-
C5.51	W-18		Pipe-to-Elbow	AUG	-	-	-	-	-	-	-	-	-	-	-	-
2	Core Spray A			OWN	-	-	-	-	-	-	-	-	-	-	-	-
				PRE	-	-	-	-	-	-	-	-	-	-	-	-
C-F-2	100354		ISI-13142-20-A	ISI	-	-	-	-	-	-	-	-	-	-	-	-
C5.51	W-19		Elbow-to-Elbow	AUG	-	-	-	-	-	-	-	-	-	-	-	-
2	Core Spray A			OWN	-	-	-	-	-	-	-	-	-	-	-	-
				PRE	-	-	-	-	-	-	-	-	-	-	-	-
C-F-2	100355		ISI-13142-20-A	ISI	-	-	-	-	-	-	-	-	-	-	-	-
C5.51	W-20		Elbow-to-Pipe	AUG	-	-	-	-	-	-	-	-	-	-	-	-
2	Core Spray A			OWN	-	-	-	-	-	-	-	-	-	-	-	-
				PRE	-	-	-	-	-	-	-	-	-	-	-	-
C-F-2	100356		ISI-13142-20-A	ISI	-	-	-	-	-	-	-	-	-	-	-	-
C5.51	W-21		Pipe-to-Pipe	AUG	-	-	-	-	-	-	-	-	-	-	-	-
2	Core Spray A			OWN	-	-	-	-	-	-	-	-	-	-	-	-
				PRE	-	-	-	-	-	-	-	-	-	-	-	-
C-F-2	100357	ISI/MT/ISI-MT-1	ISI-13142-20-A	ISI	-	c	-	-	-	-	-	-	b	-	-	-
C5.51	W-22	ISI/UT/ISI-UT-1	Pipe-to-Pump	AUG	-	-	-	-	-	-	-	-	-	-	-	-
2	Core Spray A			OWN	-	-	-	-	-	-	-	-	-	-	-	-
				PRE	-	-	-	-	-	-	-	-	-	-	-	-

MONTICELLO Nuclear Generating Plant
3rd Interval ISI Plan Rev. 3 June 1, 1992 to May 31, 2002

Category, ItemNO, Class	Summary / CompID / System	Scope / Method / Procedure	Iso No. Comp. Desc. Code Case /Note		Period 1				Period 2				Period 3			
					1	2	3	4	1	2	3	4	1	2	3	4
C-F-2	100358		ISI-13142-20-A	ISI	-	-	-	-	-	-	-	-	-	-	-	-
C5.51	W-23		Valve-to-Elbow	AUG	-	-	-	-	-	-	-	-	-	-	-	-
2	Core Spray A			OWN	-	-	-	-	-	-	-	-	-	-	-	-
				PRE	-	-	-	-	-	-	-	-	-	-	-	-
C-F-2	100359		ISI-13142-20-A	ISI	-	-	-	-	-	-	-	-	-	-	-	-
C5.51	W-24		Elbow-to-Pipe	AUG	-	-	-	-	-	-	-	-	-	-	-	-
2	Core Spray A			OWN	-	-	-	-	-	-	-	-	-	-	-	-
				PRE	-	-	-	-	-	-	-	-	-	-	-	-
C-F-2	100360		ISI-13142-20-A	ISI	-	-	-	-	-	-	-	-	-	-	-	-
C5.51	W-25		Pipe-to-Tee	AUG	-	-	-	-	-	-	-	-	-	-	-	-
2	Core Spray A			OWN	-	-	-	-	-	-	-	-	-	-	-	-
				PRE	-	-	-	-	-	-	-	-	-	-	-	-
F-C	100361	ISI/VT/ISI-VT-2.0	ISI-13142-20-B	ISI	c	-	-	-	-	-	-	-	-	-	-	-
F-A,B,C	H- 1		Variable	AUG	-	-	-	-	-	-	-	-	-	-	-	-
2	Core Spray B			OWN	-	-	-	-	-	-	-	-	-	-	-	-
				PRE	-	-	-	-	-	-	-	-	-	-	-	-
F-B	100362	ISI/VT/ISI-VT-2.0	ISI-13142-20-B	ISI	-	-	-	-	c	-	-	-	-	-	-	-
F-A,B,C	H- 2		Slide Hanger	AUG	-	-	-	-	-	-	-	-	-	-	-	-
2	Core Spray B			OWN	-	-	-	-	-	-	-	-	-	-	-	-
				PRE	-	-	-	-	-	-	-	-	-	-	-	-
F-B	100363	ISI/VT/ISI-VT-2.0	ISI-13142-20-B	ISI	c	-	-	-	B	-	-	-	-	-	-	-
F-A,B,C	H- 3		Snubber / Clamp	AUG	-	-	-	-	-	-	-	-	-	-	-	-
2	Core Spray B			OWN	-	-	-	-	-	-	-	-	-	-	-	-
				PRE	-	-	-	-	-	-	-	-	-	-	-	-
F-C	100364	ISI/VT/ISI-VT-2.0	ISI-13142-20-B	ISI	-	-	-	-	c	-	-	-	-	-	-	-
F-A,B,C	H- 4		Variable / Support	AUG	-	-	-	-	-	-	-	-	-	-	-	-
2	Core Spray B			OWN	-	-	-	-	-	-	-	-	-	-	-	-
				PRE	-	-	-	-	-	-	-	-	-	-	-	-
F-C	100365	ISI/VT/ISI-VT-2.0	ISI-13142-20-B	ISI	-	-	-	-	c	-	-	-	-	-	-	-
F-A,B,C	H- 5		Variable / Support	AUG	-	-	-	-	-	-	-	-	-	-	-	-
2	Core Spray B			OWN	-	-	-	-	-	-	-	-	-	-	-	-
				PRE	-	-	-	-	-	-	-	-	-	-	-	-
C-F-2	100366	ISI/MT/ISI-MT-1	ISI-13142-20-B	ISI	c	-	-	-	-	-	-	-	-	-	-	-
C5.51	W- 1	ISI/UT/ISI-UT-1	Torus Penn-to-Elbow	AUG	-	-	-	-	-	-	-	-	-	-	-	-
2	Core Spray B			OWN	-	-	-	-	-	-	-	-	-	-	-	-
				PRE	-	-	-	-	-	-	-	-	-	-	-	-
C-F-2	100367		ISI-13142-20-B	ISI	-	-	-	-	-	-	-	-	-	-	-	-
C5.51	W- 2		Elbow-to-Pipe	AUG	-	-	-	-	-	-	-	-	-	-	-	-
2	Core Spray B			OWN	-	-	-	-	-	-	-	-	-	-	-	-
				PRE	-	-	-	-	-	-	-	-	-	-	-	-

MONTICELLO Nuclear Generating Plant
3rd Interval ISI Plan Rev. 3 June 1, 1992 to May 31, 2002

Category, ItemNO, Class	Summary / CompID / System	Scope / Method / Procedure	Iso No. Comp. Desc. Code Case /Note		Period 1				Period 2				Period 3			
					1	2	3	4	1	2	3	4	1	2	3	4
C-F-2	100368		ISI-13142-20-B	ISI	-	-	-	-	-	-	-	-	-	-	-	-
C5.51	W- 3		Pipe-to-Pipe	AUG	-	-	-	-	-	-	-	-	-	-	-	-
2	Core Spray B			OWN	-	-	-	-	-	-	-	-	-	-	-	-
				PRE	-	-	-	-	-	-	-	-	-	-	-	-
C-F-2	100369	ISI/MT/ISI-MT-1	ISI-13142-20-B	ISI	c	-	-	-	-	-	-	-	-	-	-	-
C5.51	W- 4	ISI/UT/ISI-UT-1	Pipe-to-Elbow	AUG	-	-	-	-	-	-	-	-	-	-	-	-
2	Core Spray B			OWN	-	-	-	-	-	-	-	-	-	-	-	-
				PRE	-	-	-	-	-	-	-	-	-	-	-	-
C-F-2	100370		ISI-13142-20-B	ISI	-	-	-	-	-	-	-	-	-	-	-	-
C5.51	W- 5		Elbow-to-Pipe	AUG	-	-	-	-	-	-	-	-	-	-	-	-
2	Core Spray B			OWN	-	-	-	-	-	-	-	-	-	-	-	-
				PRE	-	-	-	-	-	-	-	-	-	-	-	-
C-F-2	100371		ISI-13142-20-B	ISI	-	-	-	-	-	-	-	-	-	-	-	-
C5.51	W- 6		Pipe-to-Valve	AUG	-	-	-	-	-	-	-	-	-	-	-	-
2	Core Spray B			OWN	-	-	-	-	-	-	-	-	-	-	-	-
				PRE	-	-	-	-	-	-	-	-	-	-	-	-
C-F-2	100372		ISI-13142-20-B	ISI	-	-	-	-	-	-	-	-	-	-	-	-
C5.51	W- 7		Valve-to-Pipe	AUG	-	-	-	-	-	-	-	-	-	-	-	-
2	Core Spray B			OWN	-	-	-	-	-	-	-	-	-	-	-	-
				PRE	-	-	-	-	-	-	-	-	-	-	-	-
C-F-2	100373		ISI-13142-20-B	ISI	-	-	-	-	-	-	-	-	-	-	-	-
C5.51	W- 8		Pipe-to-Valve	AUG	-	-	-	-	-	-	-	-	-	-	-	-
2	Core Spray B			OWN	-	-	-	-	-	-	-	-	-	-	-	-
				PRE	-	-	-	-	-	-	-	-	-	-	-	-
C-F-2	100374		ISI-13142-20-B	ISI	-	-	-	-	-	-	-	-	-	-	-	-
C5.51	W- 9		Valve-to-Tee	AUG	-	-	-	-	-	-	-	-	-	-	-	-
2	Core Spray B			OWN	-	-	-	-	-	-	-	-	-	-	-	-
				PRE	-	-	-	-	-	-	-	-	-	-	-	-
C-F-2	100375		ISI-13142-20-B	ISI	-	-	-	-	-	-	-	-	-	-	-	-
C5.51	W-10		Valve-to-Pipe	AUG	-	-	-	-	-	-	-	-	-	-	-	-
2	Core Spray B			OWN	-	-	-	-	-	-	-	-	-	-	-	-
				PRE	-	-	-	-	-	-	-	-	-	-	-	-
C-F-2	100376		ISI-13142-20-B	ISI	-	-	-	-	-	-	-	-	-	-	-	-
C5.51	W-11		Pipe-to-Elbow	AUG	-	-	-	-	-	-	-	-	-	-	-	-
2	Core Spray B			OWN	-	-	-	-	-	-	-	-	-	-	-	-
				PRE	-	-	-	-	-	-	-	-	-	-	-	-
C-F-2	100377		ISI-13142-20-B	ISI	-	-	-	-	-	-	-	-	-	-	-	-
C5.51	W-12		Elbow-to-Pipe	AUG	-	-	-	-	-	-	-	-	-	-	-	-
2	Core Spray B			OWN	-	-	-	-	-	-	-	-	-	-	-	-
				PRE	-	-	-	-	-	-	-	-	-	-	-	-

MONTICELLO Nuclear Generating Plant
3rd Interval ISI Plan Rev. 3 June 1, 1992 to May 31, 2002

Category, ItemNO, Class	Summary / CompID / System	Scope / Method / Procedure	Iso No. Comp. Desc. Code Case /Note		Period 1				Period 2				Period 3			
					1	2	3	4	1	2	3	4	1	2	3	4
C-F-2	100378		ISI-13142-20-B	ISI	-	-	-	-	-	-	-	-	-	-	-	-
C5.51	W-13		Pipe-to-Tee	AUG	-	-	-	-	-	-	-	-	-	-	-	-
2	Core Spray B			OWN	-	-	-	-	-	-	-	-	-	-	-	-
				PRE	-	-	-	-	-	-	-	-	-	-	-	-
C-F-2	100379		ISI-13142-20-B	ISI	-	-	-	-	-	-	-	-	-	-	-	-
C5.51	W-14		Tee-to-Pipe	AUG	-	-	-	-	-	-	-	-	-	-	-	-
2	Core Spray B			OWN	-	-	-	-	-	-	-	-	-	-	-	-
				PRE	-	-	-	-	-	-	-	-	-	-	-	-
C-F-2	100380	ISI/MT/ISI-MT-1	ISI-13142-20-B	ISI	-	-	-	-	c	-	-	-	-	-	-	-
C5.51	W-15	ISI/UT/ISI-UT-1	Pipe-to-Elbow	AUG	-	-	-	-	-	-	-	-	-	-	-	-
2	Core Spray B			OWN	-	-	-	-	-	-	-	-	-	-	-	-
				PRE	-	-	-	-	-	-	-	-	-	-	-	-
C-F-2	100381		ISI-13142-20-B	ISI	-	-	-	-	-	-	-	-	-	-	-	-
C5.51	W-16		Elbow-to-Pipe	AUG	-	-	-	-	-	-	-	-	-	-	-	-
2	Core Spray B			OWN	-	-	-	-	-	-	-	-	-	-	-	-
				PRE	-	-	-	-	-	-	-	-	-	-	-	-
C-F-2	100382		ISI-13142-20-B	ISI	-	-	-	-	-	-	-	-	-	-	-	-
C5.51	W-17		Pipe-to-Pipe	AUG	-	-	-	-	-	-	-	-	-	-	-	-
2	Core Spray B			OWN	-	-	-	-	-	-	-	-	-	-	-	-
				PRE	-	-	-	-	-	-	-	-	-	-	-	-
C-F-2	100383		ISI-13142-20-B	ISI	-	-	-	-	-	-	-	-	-	-	-	-
C5.51	W-18		Pipe-to-Pipe	AUG	-	-	-	-	-	-	-	-	-	-	-	-
2	Core Spray B			OWN	-	-	-	-	-	-	-	-	-	-	-	-
				PRE	-	-	-	-	-	-	-	-	-	-	-	-
C-F-2	100384		ISI-13142-20-B	ISI	-	-	-	-	-	-	-	-	-	-	-	-
C5.51	W-19		Pipe-to-Pipe	AUG	-	-	-	-	-	-	-	-	-	-	-	-
2	Core Spray B			OWN	-	-	-	-	-	-	-	-	-	-	-	-
				PRE	-	-	-	-	-	-	-	-	-	-	-	-
C-F-2	100385		ISI-13142-20-B	ISI	-	-	-	-	-	-	-	-	-	-	-	-
C5.51	W-20		Pipe-to-Elbow	AUG	-	-	-	-	-	-	-	-	-	-	-	-
2	Core Spray B			OWN	-	-	-	-	-	-	-	-	-	-	-	-
				PRE	-	-	-	-	-	-	-	-	-	-	-	-
C-F-2	100386		ISI-13142-20-B	ISI	-	-	-	-	-	-	-	-	-	-	-	-
C5.51	W-21		Elbow-to-Pipe	AUG	-	-	-	-	-	-	-	-	-	-	-	-
2	Core Spray B			OWN	-	-	-	-	-	-	-	-	-	-	-	-
				PRE	-	-	-	-	-	-	-	-	-	-	-	-
C-F-2	100387		ISI-13142-20-B	ISI	-	-	-	-	-	-	-	-	-	-	-	-
C5.51	W-22		Pipe-to-Elbow	AUG	-	-	-	-	-	-	-	-	-	-	-	-
2	Core Spray B			OWN	-	-	-	-	-	-	-	-	-	-	-	-
				PRE	-	-	-	-	-	-	-	-	-	-	-	-

MONTICELLO Nuclear Generating Plant
3rd Interval ISI Plan Rev. 3 June 1, 1992 to May 31, 2002

Category, ItemNO, Class	Summary / CompID / System	Scope / Method / Procedure	Iso No. Comp. Desc. Code Case /Note		Period 1				Period 2				Period 3			
					1	2	3	4	1	2	3	4	1	2	3	4
C-F-2	100388	ISI/MT/ISI-MT-1	ISI-13142-20-B	ISI	c	-	-	-	-	-	-	-	-	-	-	-
C5.51	W-23	ISI/UT/ISI-UT-1	Elbow-to-Pipe	AUG	-	-	-	-	-	-	-	-	-	-	-	-
2	Core Spray B			OWN	-	-	-	-	-	-	-	-	-	-	-	-
				PRE	-	-	-	-	-	-	-	-	-	-	-	-
C-F-2	100389		ISI-13142-20-B	ISI	-	-	-	-	-	-	-	-	-	-	-	-
C5.51	W-24		Pipe-to-Elbow	AUG	-	-	-	-	-	-	-	-	-	-	-	-
2	Core Spray B			OWN	-	-	-	-	-	-	-	-	-	-	-	-
				PRE	-	-	-	-	-	-	-	-	-	-	-	-
C-F-2	100390		ISI-13142-20-B	ISI	-	-	-	-	-	-	-	-	-	-	-	-
C5.51	W-25		Elbow-to-Pipe	AUG	-	-	-	-	-	-	-	-	-	-	-	-
2	Core Spray B			OWN	-	-	-	-	-	-	-	-	-	-	-	-
				PRE	-	-	-	-	-	-	-	-	-	-	-	-
C-F-2	100391		ISI-13142-20-B	ISI	-	-	-	-	-	-	-	-	-	-	-	-
C5.51	W-26		Pipe-to-Elbow	AUG	-	-	-	-	-	-	-	-	-	-	-	-
2	Core Spray B			OWN	-	-	-	-	-	-	-	-	-	-	-	-
				PRE	-	-	-	-	-	-	-	-	-	-	-	-
C-F-2	100392	ISI/MT/ISI-MT-1	ISI-13142-20-B	ISI	c	-	-	-	-	-	-	-	-	-	-	-
C5.51	W-27	ISI/UT/ISI-UT-1	Elbow-to-Pump	AUG	-	-	-	-	-	-	-	-	-	-	-	-
2	Core Spray B			OWN	-	-	-	-	-	-	-	-	-	-	-	-
				PRE	-	-	-	-	-	-	-	-	-	-	-	-
B-G-2	100393	ISI/VT/ISI-VT-1.0	ISI-13142-20-C	ISI	-	-	-	-	-	-	-	-	s	-	-	-
B7.50	B- 1	ISI/UT/ISI-UT-4C	Flange Bolts	AUG	-	-	-	-	-	-	-	-	-	-	-	-
1	Rx Ves Head Cooling			OWN	-	-	-	-	-	-	-	-	-	-	-	-
				PRE	-	-	-	-	-	-	-	-	-	-	-	-
B-G-2	100395	ISI/VT/ISI-VT-1.0	ISI-13142-20-C	ISI	-	-	-	-	-	-	-	-	s	-	-	-
B7.50	B- 2		Flange Bolts	AUG	-	-	-	-	-	-	-	-	-	-	-	-
1	Rx Ves Head Cooling			OWN	-	-	-	-	-	-	-	-	-	-	-	-
				PRE	-	-	-	-	-	-	-	-	-	-	-	-
F-C	100398	ISI/VT/ISI-VT-2.0	ISI-13142-20-C	ISI	-	-	-	-	-	-	-	-	s	-	-	-
F-A,B,C	H- 1		Strut / Clamp	AUG	-	-	-	-	-	-	-	-	-	-	-	-
1	Rx Ves Head Cooling			OWN	-	-	-	-	-	-	-	-	-	-	-	-
				PRE	-	-	-	-	-	-	-	-	-	-	-	-
B-K-1	100399	ISI/PT/ISI-PT-1	ISI-13142-20-C	ISI	-	c	-	-	-	-	-	-	-	-	-	-
B10.10	H- 2	ISI/VT/ISI-VT-2.0	Dbl Spring / 4 Lugs	AUG	-	-	-	-	-	-	-	-	-	-	-	-
1	Rx Ves Head Cooling			OWN	-	-	-	-	-	-	-	-	-	-	-	-
				PRE	-	-	-	-	-	-	-	-	-	-	-	-
F-B	100401		ISI-13142-20-C	ISI	-	-	-	-	-	-	-	-	-	-	-	-
F-A,B,C	H- 3		Box Restraint	AUG	-	-	-	-	-	-	-	-	-	-	-	-
1	Rx Ves Head Cooling			OWN	-	-	-	-	-	-	-	-	-	-	-	-
				PRE	-	-	-	-	-	-	-	-	-	-	-	-

MONTICELLO Nuclear Generating Plant
3rd Interval ISI Plan Rev. 3 June 1, 1992 to May 31, 2002

Category, ItemNO, Class	Summary / CompID / System	Scope / Method / Procedure	Iso No. Comp. Desc. Code Case /Note		Period 1				Period 2				Period 3			
					1	2	3	4	1	2	3	4	1	2	3	4
B-J	100402		ISI-13142-20-C	ISI	-	-	-	-	-	-	-	-	-	-	-	-
B9.11	W- 1		Valve-to-Pipe	AUG	-	-	-	-	-	-	-	-	-	-	-	-
1	Rx Ves Head Cooling			OWN	-	-	-	-	-	-	-	-	-	-	-	-
				PRE	-	-	-	-	-	-	-	-	-	-	-	-
B-J	100403	ISI/MT/ISI-MT-1	ISI-13142-20-C	ISI	-	-	-	-	-	-	-	-	s	-	-	-
B9.11	W- 2	ISI/UT/ISI-UT-1	Pipe-to-Pipe	AUG	-	-	-	-	-	-	-	-	-	-	-	-
1	Rx Ves Head Cooling		Note: DD	OWN	-	-	-	-	-	-	-	-	-	-	-	-
				PRE	-	-	-	-	-	-	-	-	-	-	-	-
B-J	100404		ISI-13142-20-C	ISI	-	-	-	-	-	-	-	-	-	-	-	-
B9.11	W- 3		Pipe-to-Pipe	AUG	-	-	-	-	-	-	-	-	-	-	-	-
1	Rx Ves Head Cooling			OWN	-	-	-	-	-	-	-	-	-	-	-	-
				PRE	-	-	-	-	-	-	-	-	-	-	-	-
B-J	100405		ISI-13142-20-C	ISI	-	-	-	-	-	-	-	-	-	-	-	-
B9.11	W- 4		Pipe-to-Elbow	AUG	-	-	-	-	-	-	-	-	-	-	-	-
1	Rx Ves Head Cooling			OWN	-	-	-	-	-	-	-	-	-	-	-	-
				PRE	-	-	-	-	-	-	-	-	-	-	-	-
B-J	100406		ISI-13142-20-C	ISI	-	-	-	-	-	-	-	-	-	-	-	-
B9.11	W- 5		Elbow-to-Pipe	AUG	-	-	-	-	-	-	-	-	-	-	-	-
1	Rx Ves Head Cooling			OWN	-	-	-	-	-	-	-	-	-	-	-	-
				PRE	-	-	-	-	-	-	-	-	-	-	-	-
B-J	100407	ISI/MT/ISI-MT-1	ISI-13142-20-C	ISI	-	-	-	-	-	c	-	-	-	-	-	-
B9.11	W- 6	ISI/UT/ISI-UT-1	Pipe-to-Valve	AUG	-	-	-	-	-	-	-	-	-	-	-	-
1	Rx Ves Head Cooling			OWN	-	-	-	-	-	-	-	-	-	-	-	-
				PRE	-	-	-	-	-	-	-	-	-	-	-	-
B-J	100408	ISI/MT/ISI-MT-1	ISI-13142-20-C	ISI	-	-	-	-	-	c	-	-	-	-	-	-
B9.11	W- 7	ISI/UT/ISI-UT-1	Valve to Pipe	AUG	-	-	-	-	-	-	-	-	-	-	-	-
1	Rx Ves Head Cooling			OWN	-	-	-	-	-	-	-	-	-	-	-	-
				PRE	-	-	-	-	-	-	-	-	-	-	-	-
B-J	100409		ISI-13142-20-C	ISI	-	-	-	-	-	-	-	-	-	-	-	-
B9.11	W- 8		Pipe-to-Valve	AUG	-	-	-	-	-	-	-	-	-	-	-	-
1	Rx Ves Head Cooling			OWN	-	-	-	-	-	-	-	-	-	-	-	-
				PRE	-	-	-	-	-	-	-	-	-	-	-	-
B-J	100410		ISI-13142-20-C	ISI	-	-	-	-	-	-	-	-	-	-	-	-
B9.11	W- 9		Valve-to-Elbow	AUG	-	-	-	-	-	-	-	-	-	-	-	-
1	Rx Ves Head Cooling			OWN	-	-	-	-	-	-	-	-	-	-	-	-
				PRE	-	-	-	-	-	-	-	-	-	-	-	-
B-J	100411	ISI/MT/ISI-MT-1	ISI-13142-20-C	ISI	-	c	-	-	-	-	-	-	-	-	-	-
B9.11	W-10	ISI/UT/ISI-UT-1	Elbow-to-Pipe	AUG	-	-	-	-	-	-	-	-	-	-	-	-
1	Rx Ves Head Cooling			OWN	-	-	-	-	-	-	-	-	-	-	-	-
				PRE	-	-	-	-	-	-	-	-	-	-	-	-

MONTICELLO Nuclear Generating Plant
3rd Interval ISI Plan Rev. 3 June 1, 1992 to May 31, 2002

Category, ItemNO, Class	Summary / CompID / System	Scope / Method / Procedure	Iso No. Comp. Desc. Code Case /Note		Period 1				Period 2				Period 3			
					1	2	3	4	1	2	3	4	1	2	3	4
B-J	100412		ISI-13142-20-C	ISI	-	-	-	-	-	-	-	-	-	-	-	-
B9.11	W-11		Pipe-to-Elbow	AUG	-	-	-	-	-	-	-	-	-	-	-	-
1	Rx Ves Head Cooling			OWN	-	-	-	-	-	-	-	-	-	-	-	-
				PRE	-	-	-	-	-	-	-	-	-	-	-	-
B-J	100413		ISI-13142-20-C	ISI	-	-	-	-	-	-	-	-	-	-	-	-
B9.11	W-12		Elbow-to-Pipe	AUG	-	-	-	-	-	-	-	-	-	-	-	-
1	Rx Ves Head Cooling			OWN	-	-	-	-	-	-	-	-	-	-	-	-
				PRE	-	-	-	-	-	-	-	-	-	-	-	-
B-J	100414		ISI-13142-20-C	ISI	-	-	-	-	-	-	-	-	-	-	-	-
B9.11	W-13		Pipe-to-Elbow	AUG	-	-	-	-	-	-	-	-	-	-	-	-
1	Rx Ves Head Cooling			OWN	-	-	-	-	-	-	-	-	-	-	-	-
				PRE	-	-	-	-	-	-	-	-	-	-	-	-
B-J	100415		ISI-13142-20-C	ISI	-	-	-	-	-	-	-	-	-	-	-	-
B9.11	W-14		Elbow-to-Pipe	AUG	-	-	-	-	-	-	-	-	-	-	-	-
1	Rx Ves Head Cooling			OWN	-	-	-	-	-	-	-	-	-	-	-	-
				PRE	-	-	-	-	-	-	-	-	-	-	-	-
B-J	100416		ISI-13142-20-C	ISI	-	-	-	-	-	-	-	-	-	-	-	-
B9.11	W-15		Pipe-to-Pipe	AUG	-	-	-	-	-	-	-	-	-	-	-	-
1	Rx Ves Head Cooling			OWN	-	-	-	-	-	-	-	-	-	-	-	-
				PRE	-	-	-	-	-	-	-	-	-	-	-	-
B-J	100417		ISI-13142-20-C	ISI	-	-	-	-	-	-	-	-	-	-	-	-
B9.11	W-16		Pipe-to-Flange	AUG	-	-	-	-	-	-	-	-	-	-	-	-
1	Rx Ves Head Cooling			OWN	-	-	-	-	-	-	-	-	-	-	-	-
				PRE	-	-	-	-	-	-	-	-	-	-	-	-
B-J	100418		ISI-13142-20-C	ISI	-	-	-	-	-	-	-	-	-	-	-	-
B9.11	W-17		Flange-to-Pipe	AUG	-	-	-	-	-	-	-	-	-	-	-	-
1	Rx Ves Head Cooling			OWN	-	-	-	-	-	-	-	-	-	-	-	-
				PRE	-	-	-	-	-	-	-	-	-	-	-	-
B-J	100419	ISI/MT/ISI-MT-1	ISI-13142-20-C	ISI	-	-	-	-	-	-	-	-	s	-	-	-
B9.11	W-18	ISI/UT/ISI-UT-1	Pipe-to-Elbow	AUG	-	-	-	-	-	-	-	-	-	-	-	-
1	Rx Ves Head Cooling			OWN	-	-	-	-	-	-	-	-	-	-	-	-
				PRE	-	-	-	-	-	-	-	-	-	-	-	-
B-J	100420		ISI-13142-20-C	ISI	-	-	-	-	-	-	-	-	-	-	-	-
B9.11	W-19		Elbow-to-Pipe	AUG	-	-	-	-	-	-	-	-	-	-	-	-
1	Rx Ves Head Cooling			OWN	-	-	-	-	-	-	-	-	-	-	-	-
				PRE	-	-	-	-	-	-	-	-	-	-	-	-
B-J	100421		ISI-13142-20-C	ISI	-	-	-	-	-	-	-	-	-	-	-	-
B9.11	W-20		Pipe-to-Elbow	AUG	-	-	-	-	-	-	-	-	-	-	-	-
1	Rx Ves Head Cooling			OWN	-	-	-	-	-	-	-	-	-	-	-	-
				PRE	-	-	-	-	-	-	-	-	-	-	-	-

MONTICELLO Nuclear Generating Plant
3rd Interval ISI Plan Rev. 3 June 1, 1992 to May 31, 2002

Category, ItemNO, Class	Summary / CompID / System	Scope / Method / Procedure	Iso No. Comp. Desc. Code Case /Note		Period 1				Period 2				Period 3			
					1	2	3	4	1	2	3	4	1	2	3	4
B-J	100422		ISI-13142-20-C	ISI	-	-	-	-	-	-	-	-	-	-	-	-
B9.11	W-21		Elbow-to-Flange	AUG	-	-	-	-	-	-	-	-	-	-	-	-
1	Rx Ves Head Cooling			OWN	-	-	-	-	-	-	-	-	-	-	-	-
				PRE	-	-	-	-	-	-	-	-	-	-	-	-
B-J	100423	ISI/PT/ISI-PT-1	ISI-13142-20-C	ISI	-	c	-	-	-	-	-	-	-	-	-	-
B9.11	W-22	ISI/UT/ISI-UT-1	Flange-to-Nozzle	AUG	-	-	-	-	-	-	-	-	-	-	-	-
1	Rx Ves Head Cooling		NOTE: CC	OWN	-	-	-	-	-	-	-	-	-	-	-	-
				PRE	-	-	-	-	-	-	-	-	-	-	-	-
B-G-2	100424	ISI/VT/ISI-VT-1.0	ISI-13142-26-A	ISI	c	-	-	-	-	-	-	-	-	-	-	-
B7.70	B- 1		Valve Bolts	AUG	-	-	-	-	-	-	-	-	-	-	-	-
1	Core Spray B			OWN	-	-	-	-	-	-	-	-	-	-	-	-
				PRE	-	-	-	-	-	-	-	-	-	-	-	-
B-G-2	100425	ISI/VT/ISI-VT-1.0	ISI-13142-26-A	ISI	c	-	-	-	-	-	-	-	-	-	-	-
B7.70	B- 2		Valve Bolts	AUG	-	-	-	-	-	-	-	-	-	-	-	-
1	Core Spray B			OWN	-	-	-	-	-	-	-	-	-	-	-	-
				PRE	-	-	-	-	-	-	-	-	-	-	-	-
B-G-2	100426	ISI/VT/ISI-VT-1.0	ISI-13142-26-A	ISI	-	-	-	-	-	-	-	-	s	-	-	-
B7.70	B- 3		Valve Bolts	AUG	-	-	-	-	-	-	-	-	-	-	-	-
1	Core Spray B			OWN	-	-	-	-	-	-	-	-	-	-	-	-
				PRE	-	-	-	-	-	-	-	-	-	-	-	-
F-C	100427	ISI/VT/ISI-VT-2.0	ISI-13142-26-A	ISI	-	-	-	-	-	-	-	-	e	-	-	-
F-A,B,C	H- 1		Restraint / Clamp	AUG	-	-	-	-	-	-	-	-	-	-	-	-
1	Core Spray B			OWN	-	-	-	-	-	-	-	-	-	-	-	-
				PRE	-	-	-	-	-	-	-	-	-	-	-	-
F-B	100428	ISI/VT/ISI-VT-2.0	ISI-13142-26-A	ISI	-	-	-	-	-	-	-	-	s	-	-	-
F-A,B,C	H- 2		Restraint Slide	AUG	-	-	-	-	-	-	-	-	-	-	-	-
1	Core Spray B			OWN	-	-	-	-	-	-	-	-	-	-	-	-
				PRE	-	-	-	-	-	-	-	-	-	-	-	-
F-C	100429	ISI/VT/ISI-VT-2.0	ISI-13142-26-A	ISI	-	c	-	-	-	-	-	-	e	-	-	-
F-A,B,C	H- 3		Spring / Clamp	AUG	-	-	-	-	-	-	-	-	-	-	-	-
2	Core Spray B			OWN	-	-	-	-	-	-	-	-	-	-	-	-
				PRE	-	-	-	-	-	-	-	-	-	-	-	-
F-C	100430	ISI/VT/ISI-VT-2.0	ISI-13142-26-A	ISI	-	-	-	-	-	-	-	-	-	s	-	-
F-A,B,C	H- 4		Spring / Clamp	AUG	-	-	-	-	-	-	-	-	-	-	-	-
2	Core Spray B			OWN	-	-	-	-	-	-	-	-	-	-	-	-
				PRE	-	-	-	-	-	-	-	-	-	-	-	-
B-M-2	100431		ISI-13142-26-A	ISI	-	-	-	-	-	-	-	-	-	-	-	-
B12.50	V- 1		Valve Int Surfaces	AUG	-	-	-	-	-	-	-	-	-	-	-	-
1	Core Spray B		NOTE: HH, RELIEF 4	OWN	-	-	-	-	-	-	-	-	-	-	-	-
				PRE	-	-	-	-	-	-	-	-	-	-	-	-

MONTICELLO Nuclear Generating Plant
3rd Interval ISI Plan Rev. 3 June 1, 1992 to May 31, 2002

Category, ItemNO, Class	Summary / CompID / System	Scope / Method / Procedure	Iso No. Comp. Desc. Code Case /Note		Period 1				Period 2				Period 3			
					1	2	3	4	1	2	3	4	1	2	3	4
B-M-2	100432		ISI-13142-26-A	ISI	-	-	-	-	-	-	-	-	-	-	-	-
B12.50	V- 2		Valve Int Surfaces	AUG	-	-	-	-	-	-	-	-	-	-	-	-
1	Core Spray B		NOTE: HH, RELIEF 4	OWN	-	-	-	-	-	-	-	-	-	-	-	-
				PRE	-	-	-	-	-	-	-	-	-	-	-	-
B-M-2	100433	ISI/VT/ISI-VT-3.0	ISI-13142-26-A	ISI	c	-	-	-	-	-	-	-	-	-	-	-
B12.50	V- 3		Valve Int Surfaces	AUG	-	-	-	-	-	-	-	-	-	-	-	-
1	Core Spray B		NOTE: HH, RELIEF 4	OWN	-	-	-	-	-	-	-	-	-	-	-	-
				PRE	-	-	-	-	-	-	-	-	-	-	-	-
C-F-2	100434	ISI/MT/ISI-MT-1	ISI-13142-26-A	ISI	-	-	-	-	-	-	-	-	s	-	-	-
C5.51	W- 1	ISI/UT/ISI-UT-1	Valve-to-Pipe	AUG	-	-	-	-	-	-	-	-	-	-	-	-
2	Core Spray B		NOTE: JJ	OWN	-	-	-	-	-	-	-	-	-	-	-	-
				PRE	-	-	-	-	-	-	-	-	-	-	-	-
C-F-2	100435	ISI/MT/ISI-MT-1	ISI-13142-26-A	ISI	-	-	-	-	-	-	-	-	s	-	-	-
C5.51	W- 2	ISI/UT/ISI-UT-1	Pipe-to-Elbow	AUG	-	-	-	-	-	-	-	-	-	-	-	-
2	Core Spray B		NOTE: JJ	OWN	-	-	-	-	-	-	-	-	-	-	-	-
				PRE	-	-	-	-	-	-	-	-	-	-	-	-
C-F-2	100436	ISI/MT/ISI-MT-1	ISI-13142-26-A	ISI	-	-	-	-	-	-	-	-	s	-	-	-
C5.51	W- 3	ISI/UT/ISI-UT-1	Elbow-to-Pipe	AUG	-	-	-	-	-	-	-	-	-	-	-	-
2	Core Spray B		NOTE: JJ	OWN	-	-	-	-	-	-	-	-	-	-	-	-
				PRE	-	-	-	-	-	-	-	-	-	-	-	-
C-F-2	100437	ISI/MT/ISI-MT-1	ISI-13142-26-A	ISI	-	-	-	-	-	-	-	-	s	-	-	-
C5.51	W- 4	ISI/UT/ISI-UT-1	Pipe-to-Elbow	AUG	-	-	-	-	-	-	-	-	-	-	-	-
2	Core Spray B		NOTE: JJ	OWN	-	-	-	-	-	-	-	-	-	-	-	-
				PRE	-	-	-	-	-	-	-	-	-	-	-	-
C-F-2	100438	ISI/MT/ISI-MT-1	ISI-13142-26-A	ISI	-	-	-	-	-	-	-	-	s	-	-	-
C5.51	W- 5	ISI/UT/ISI-UT-1	Elbow-to-Valve	AUG	-	-	-	-	-	-	-	-	-	-	-	-
2	Core Spray B		NOTE: JJ	OWN	-	-	-	-	-	-	-	-	-	-	-	-
				PRE	-	-	-	-	-	-	-	-	-	-	-	-
B-J	100439	ISI/MT/ISI-MT-1	ISI-13142-26-A	ISI	-	c	-	-	-	-	-	-	-	-	-	-
B9.11	W- 6	ISI/UT/ISI-UT-1	Valve-to-Pipe	AUG	-	-	-	-	-	-	-	-	-	-	-	-
1	Core Spray B		NOTE: MM	OWN	-	-	-	-	-	-	-	-	-	-	-	-
				PRE	-	-	-	-	-	-	-	-	-	-	-	-
B-J	100440	ISI/MT/ISI-MT-1	ISI-13142-26-A	ISI	-	c	-	-	-	-	-	-	-	-	-	-
B9.11	W- 7	ISI/UT/ISI-UT-1	Pipe-to-Pipe	AUG	-	-	-	-	-	-	-	-	-	-	-	-
1	Core Spray B		NOTE: MM	OWN	-	-	-	-	-	-	-	-	-	-	-	-
				PRE	-	-	-	-	-	-	-	-	-	-	-	-
B-J	100441	ISI/MT/ISI-MT-1	ISI-13142-26-A	ISI	-	-	-	-	-	-	-	-	s	-	-	-
B9.11	W- 8	ISI/UT/ISI-UT-1	Pipe-to-Pipe	AUG	-	-	-	-	-	-	-	-	-	-	-	-
1	Core Spray B			OWN	-	-	-	-	-	-	-	-	-	-	-	-
				PRE	-	-	-	-	-	-	-	-	-	-	-	-

MONTICELLO Nuclear Generating Plant
3rd Interval ISI Plan Rev. 3 June 1, 1992 to May 31, 2002

Category, ItemNO, Class	Summary / CompID / System	Scope / Method / Procedure	Iso No. Comp. Desc. Code Case /Note		Period 1				Period 2				Period 3			
					1	2	3	4	1	2	3	4	1	2	3	4
B-J	100442		ISI-13142-26-A	ISI	-	-	-	-	-	-	-	-	-	-	-	-
B9.11	W- 9		Pipe-to-Pipe	AUG	-	-	-	-	-	-	-	-	-	-	-	-
1	Core Spray B		NOTE: DD	OWN	-	-	-	-	-	-	-	-	-	-	-	-
				PRE	-	-	-	-	-	-	-	-	-	-	-	-
B-J	100443		ISI-13142-26-A	ISI	-	-	-	-	-	-	-	-	-	-	-	-
B9.11	W-10		Pipe-to-Pipe	AUG	-	-	-	-	-	-	-	-	-	-	-	-
1	Core Spray B			OWN	-	-	-	-	-	-	-	-	-	-	-	-
				PRE	-	-	-	-	-	-	-	-	-	-	-	-
B-J	100444		ISI-13142-26-A	ISI	-	-	-	-	-	-	-	-	-	-	-	-
B9.11	W-11		Pipe-to-Elbow	AUG	-	-	-	-	-	-	-	-	-	-	-	-
1	Core Spray B			OWN	-	-	-	-	-	-	-	-	-	-	-	-
				PRE	-	-	-	-	-	-	-	-	-	-	-	-
B-J	100445		ISI-13142-26-A	ISI	-	-	-	-	-	-	-	-	-	-	-	-
B9.11	W-12		Elbow-to-Pipe	AUG	-	-	-	-	-	-	-	-	-	-	-	-
1	Core Spray B			OWN	-	-	-	-	-	-	-	-	-	-	-	-
				PRE	-	-	-	-	-	-	-	-	-	-	-	-
B-J	100446	ISI/PT/ISI-PT-1	ISI-13142-26-A	ISI	c	-	-	-	-	-	-	-	-	-	-	-
B9.11	W-13	ISI/UT/ISI-UT-16	Pipe-to-Valve	AUG	-	-	-	-	-	-	-	-	-	-	-	-
1	Core Spray B		NOTE: CC	OWN	-	-	-	-	-	-	-	-	-	-	-	-
				PRE	-	-	-	-	-	-	-	-	-	-	-	-
B-J	100447	ISI/PT/ISI-PT-1	ISI-13142-26-A	ISI	c	-	-	-	-	-	-	-	-	-	-	-
B9.11	W-14	ISI/UT/ISI-UT-16	Valve-to-Pipe	AUG	-	-	-	-	-	-	-	-	-	-	-	-
1	Core Spray B		NOTE: CC	OWN	-	-	-	-	-	-	-	-	-	-	-	-
				PRE	-	-	-	-	-	-	-	-	-	-	-	-
B-J	100448		ISI-13142-26-A	ISI	-	-	-	-	-	-	-	-	-	-	-	-
B9.11	W-15		Pipe-to-Elbow	AUG	-	-	-	-	-	-	-	-	-	-	-	-
1	Core Spray B			OWN	-	-	-	-	-	-	-	-	-	-	-	-
				PRE	-	-	-	-	-	-	-	-	-	-	-	-
B-J	100449		ISI-13142-26-A	ISI	-	-	-	-	-	-	-	-	-	-	-	-
B9.11	W-16		Elbow-to-Valve	AUG	-	-	-	-	-	-	-	-	-	-	-	-
1	Core Spray B			OWN	-	-	-	-	-	-	-	-	-	-	-	-
				PRE	-	-	-	-	-	-	-	-	-	-	-	-
B-J	100450		ISI-13142-26-A	ISI	-	-	-	-	-	-	-	-	-	-	-	-
B9.11	W-17		Valve-to-Bent Pipe	AUG	-	-	-	-	-	-	-	-	-	-	-	-
1	Core Spray B			OWN	-	-	-	-	-	-	-	-	-	-	-	-
				PRE	-	-	-	-	-	-	-	-	-	-	-	-
B-J	100451		ISI-13142-26-A	ISI	-	-	-	-	-	-	-	-	-	-	-	-
B9.11	W-18		Bent Pipe/Bent Pipe	AUG	-	-	-	-	-	-	-	-	-	-	-	-
1	Core Spray B			OWN	-	-	-	-	-	-	-	-	-	-	-	-
				PRE	-	-	-	-	-	-	-	-	-	-	-	-

MONTICELLO Nuclear Generating Plant
3rd Interval ISI Plan Rev. 3 June 1, 1992 to May 31, 2002

Category, ItemNO, Class	Summary / CompID / System	Scope / Method / Procedure	Iso No. Comp. Desc. Code Case /Note		Period 1				Period 2				Period 3			
					1	2	3	4	1	2	3	4	1	2	3	4
B-J	100452		ISI-13142-26-A	ISI	-	-	-	-	-	-	-	-	-	-	-	-
B9.11	W-19		Bent Pipe-to-SafeEnd	AUG	-	-	-	-	-	-	-	-	-	-	-	-
1	Core Spray B			OWN	-	-	-	-	-	-	-	-	-	-	-	-
				PRE	-	-	-	-	-	-	-	-	-	-	-	-
B-F	100453	ISI/MT/ISI-MT-1	ISI-13142-26-A	ISI	-	-	-	-	-	-	-	-	s	-	-	-
B5.10	W-20	ISI/UT/ISI-UT-1	Safe End-to-Nozzle	AUG	-	-	-	-	-	-	-	-	-	-	-	-
1	Core Spray B			OWN	-	-	-	-	-	-	-	-	-	-	-	-
				PRE	-	-	-	-	-	-	-	-	-	-	-	-
C-F-2	100454		ISI-13142-26-B	ISI	-	-	-	-	-	-	-	-	-	-	-	-
CX.XX	W-12		Pipe-to-Elbow	AUG	-	-	-	-	-	-	-	-	-	-	-	-
2	Core Spray B			OWN	-	-	-	-	-	-	-	-	-	-	-	-
				PRE	-	-	-	-	-	-	-	-	-	-	-	-
C-F-2	100455		ISI-13142-26-B	ISI	-	-	-	-	-	-	-	-	-	-	-	-
CX.XX	W- 1		Reducer-to-Valve	AUG	-	-	-	-	-	-	-	-	-	-	-	-
2	Core Spray B			OWN	-	-	-	-	-	-	-	-	-	-	-	-
				PRE	-	-	-	-	-	-	-	-	-	-	-	-
C-F-2	100456		ISI-13142-26-B	ISI	-	-	-	-	-	-	-	-	-	-	-	-
CX.XX	W- 2		Pipe-to-Reducer	AUG	-	-	-	-	-	-	-	-	-	-	-	-
2	Core Spray B			OWN	-	-	-	-	-	-	-	-	-	-	-	-
				PRE	-	-	-	-	-	-	-	-	-	-	-	-
C-F-2	100457		ISI-13142-26-B	ISI	-	-	-	-	-	-	-	-	-	-	-	-
CX.XX	W- 3		Tee-to-Pipe	AUG	-	-	-	-	-	-	-	-	-	-	-	-
2	Core Spray B			OWN	-	-	-	-	-	-	-	-	-	-	-	-
				PRE	-	-	-	-	-	-	-	-	-	-	-	-
C-F-2	100458		ISI-13142-26-B	ISI	-	-	-	-	-	-	-	-	-	-	-	-
CX.XX	W- 4		Tee-to-Pipe	AUG	-	-	-	-	-	-	-	-	-	-	-	-
2	Core Spray B			OWN	-	-	-	-	-	-	-	-	-	-	-	-
				PRE	-	-	-	-	-	-	-	-	-	-	-	-
C-F-2	100459		ISI-13142-26-B	ISI	-	-	-	-	-	-	-	-	-	-	-	-
CX.XX	W- 5		Pipe-to-Elbow	AUG	-	-	-	-	-	-	-	-	-	-	-	-
2	Core Spray B			OWN	-	-	-	-	-	-	-	-	-	-	-	-
				PRE	-	-	-	-	-	-	-	-	-	-	-	-
C-F-2	100460		ISI-13142-26-B	ISI	-	-	-	-	-	-	-	-	-	-	-	-
CX.XX	W- 6		Elbow-to-Elbow	AUG	-	-	-	-	-	-	-	-	-	-	-	-
2	Core Spray B			OWN	-	-	-	-	-	-	-	-	-	-	-	-
				PRE	-	-	-	-	-	-	-	-	-	-	-	-
C-F-2	100461		ISI-13142-26-B	ISI	-	-	-	-	-	-	-	-	-	-	-	-
CX.XX	W- 7		Elbow-to-Pipe	AUG	-	-	-	-	-	-	-	-	-	-	-	-
2	Core Spray B			OWN	-	-	-	-	-	-	-	-	-	-	-	-
				PRE	-	-	-	-	-	-	-	-	-	-	-	-

MONTICELLO Nuclear Generating Plant
3rd Interval ISI Plan Rev. 3 June 1, 1992 to May 31, 2002

Category, ItemNO, Class	Summary / CompID / System	Scope / Method / Procedure	Iso No. Comp. Desc. Code Case /Note		Period 1				Period 2				Period 3			
					1	2	3	4	1	2	3	4	1	2	3	4
C-F-2	100462		ISI-13142-26-B	ISI	-	-	-	-	-	-	-	-	-	-	-	-
CX.XX	W- 8		Pipe-to-Pipe	AUG	-	-	-	-	-	-	-	-	-	-	-	-
2	Core Spray B			OWN	-	-	-	-	-	-	-	-	-	-	-	-
				PRE	-	-	-	-	-	-	-	-	-	-	-	-
C-F-2	100463		ISI-13142-26-B	ISI	-	-	-	-	-	-	-	-	-	-	-	-
CX.XX	W- 9		Pipe-to-Pipe	AUG	-	-	-	-	-	-	-	-	-	-	-	-
2	Core Spray B			OWN	-	-	-	-	-	-	-	-	-	-	-	-
				PRE	-	-	-	-	-	-	-	-	-	-	-	-
C-F-2	100464		ISI-13142-26-B	ISI	-	-	-	-	-	-	-	-	-	-	-	-
CX.XX	W-10		Pipe-to-Elbow	AUG	-	-	-	-	-	-	-	-	-	-	-	-
2	Core Spray B			OWN	-	-	-	-	-	-	-	-	-	-	-	-
				PRE	-	-	-	-	-	-	-	-	-	-	-	-
C-F-2	100465		ISI-13142-26-B	ISI	-	-	-	-	-	-	-	-	-	-	-	-
CX.XX	W-13		Elbow-to-Pipe	AUG	-	-	-	-	-	-	-	-	-	-	-	-
2	Core Spray B			OWN	-	-	-	-	-	-	-	-	-	-	-	-
				PRE	-	-	-	-	-	-	-	-	-	-	-	-
C-F-2	100466		ISI-13142-26-B	ISI	-	-	-	-	-	-	-	-	-	-	-	-
CX.XX	W-14		Pipe-to-Elbow	AUG	-	-	-	-	-	-	-	-	-	-	-	-
2	Core Spray B			OWN	-	-	-	-	-	-	-	-	-	-	-	-
				PRE	-	-	-	-	-	-	-	-	-	-	-	-
C-F-2	100467		ISI-13142-26-B	ISI	-	-	-	-	-	-	-	-	-	-	-	-
CX.XX	W-15		Elbow-to-Pipe	AUG	-	-	-	-	-	-	-	-	-	-	-	-
2	Core Spray B			OWN	-	-	-	-	-	-	-	-	-	-	-	-
				PRE	-	-	-	-	-	-	-	-	-	-	-	-
C-F-2	100468		ISI-13142-26-B	ISI	-	-	-	-	-	-	-	-	-	-	-	-
CX.XX	W-16		Pipe-to-Pipe	AUG	-	-	-	-	-	-	-	-	-	-	-	-
2	Core Spray B			OWN	-	-	-	-	-	-	-	-	-	-	-	-
				PRE	-	-	-	-	-	-	-	-	-	-	-	-
C-F-2	100469		ISI-13142-26-B	ISI	-	-	-	-	-	-	-	-	-	-	-	-
CX.XX	W-17		Pipe-to-Reducer	AUG	-	-	-	-	-	-	-	-	-	-	-	-
2	Core Spray B			OWN	-	-	-	-	-	-	-	-	-	-	-	-
				PRE	-	-	-	-	-	-	-	-	-	-	-	-
C-F-2	100470	ISI/MT/ISI-MT-1	ISI-13142-26-B	ISI	-	-	-	-	-	-	-	-	s	-	-	-
C5.51	W-18	ISI/UT/ISI-UT-1	Reducer-to-Valve	AUG	-	-	-	-	-	-	-	-	-	-	-	-
2	Core Spray B		NOTE: JJ	OWN	-	-	-	-	-	-	-	-	-	-	-	-
				PRE	-	-	-	-	-	-	-	-	-	-	-	-
C-F-2	100471		ISI-13142-26-C	ISI	-	-	-	-	-	-	-	-	-	-	-	-
CX.XX	W- 1		Pump-to-Elbow	AUG	-	-	-	-	-	-	-	-	-	-	-	-
2	Core Spray B			OWN	-	-	-	-	-	-	-	-	-	-	-	-
				PRE	-	-	-	-	-	-	-	-	-	-	-	-

MONTICELLO Nuclear Generating Plant
3rd Interval ISI Plan Rev. 3 June 1, 1992 to May 31, 2002

Category, ItemNO, Class	Summary / CompID / System	Scope / Method / Procedure	Iso No. Comp. Desc. Code Case /Note		Period 1				Period 2				Period 3			
					1	2	3	4	1	2	3	4	1	2	3	4
C-F-2	100472		ISI-13142-26-C	ISI	-	-	-	-	-	-	-	-	-	-	-	-
CX.XX	W- 2		Elbow-to-Pipe	AUG	-	-	-	-	-	-	-	-	-	-	-	-
2	Core Spray B			OWN	-	-	-	-	-	-	-	-	-	-	-	-
				PRE	-	-	-	-	-	-	-	-	-	-	-	-
C-F-2	100473		ISI-13142-26-C	ISI	-	-	-	-	-	-	-	-	-	-	-	-
CX.XX	W- 3		Pipe-to-Valve	AUG	-	-	-	-	-	-	-	-	-	-	-	-
2	Core Spray B			OWN	-	-	-	-	-	-	-	-	-	-	-	-
				PRE	-	-	-	-	-	-	-	-	-	-	-	-
C-F-2	100474		ISI-13142-26-C	ISI	-	-	-	-	-	-	-	-	-	-	-	-
CX.XX	W- 4		Valve-to-Pipe	AUG	-	-	-	-	-	-	-	-	-	-	-	-
2	Core Spray B			OWN	-	-	-	-	-	-	-	-	-	-	-	-
				PRE	-	-	-	-	-	-	-	-	-	-	-	-
C-F-2	100475		ISI-13142-26-C	ISI	-	-	-	-	-	-	-	-	-	-	-	-
CX.XX	W- 5		Pipe-to-Elbow	AUG	-	-	-	-	-	-	-	-	-	-	-	-
2	Core Spray B			OWN	-	-	-	-	-	-	-	-	-	-	-	-
				PRE	-	-	-	-	-	-	-	-	-	-	-	-
C-F-2	100476		ISI-13142-26-C	ISI	-	-	-	-	-	-	-	-	-	-	-	-
CX.XX	W- 6		Elbow-to-Pipe	AUG	-	-	-	-	-	-	-	-	-	-	-	-
2	Core Spray B			OWN	-	-	-	-	-	-	-	-	-	-	-	-
				PRE	-	-	-	-	-	-	-	-	-	-	-	-
C-F-2	100477		ISI-13142-26-C	ISI	-	-	-	-	-	-	-	-	-	-	-	-
CX.XX	W- 7		Pipe-to-Flange	AUG	-	-	-	-	-	-	-	-	-	-	-	-
2	Core Spray B			OWN	-	-	-	-	-	-	-	-	-	-	-	-
				PRE	-	-	-	-	-	-	-	-	-	-	-	-
C-F-2	100478		ISI-13142-26-C	ISI	-	-	-	-	-	-	-	-	-	-	-	-
CX.XX	W- 8		Flange-to-Pipe	AUG	-	-	-	-	-	-	-	-	-	-	-	-
2	Core Spray B			OWN	-	-	-	-	-	-	-	-	-	-	-	-
				PRE	-	-	-	-	-	-	-	-	-	-	-	-
C-F-2	100479		ISI-13142-26-C	ISI	-	-	-	-	-	-	-	-	-	-	-	-
CX.XX	W- 9		Pipe-to-Elbow	AUG	-	-	-	-	-	-	-	-	-	-	-	-
2	Core Spray B			OWN	-	-	-	-	-	-	-	-	-	-	-	-
				PRE	-	-	-	-	-	-	-	-	-	-	-	-
C-F-2	100480		ISI-13142-26-C	ISI	-	-	-	-	-	-	-	-	-	-	-	-
CX.XX	W-10		Elbow-to-Pipe	AUG	-	-	-	-	-	-	-	-	-	-	-	-
2	Core Spray B			OWN	-	-	-	-	-	-	-	-	-	-	-	-
				PRE	-	-	-	-	-	-	-	-	-	-	-	-
C-F-2	100481		ISI-13142-26-C	ISI	-	-	-	-	-	-	-	-	-	-	-	-
CX.XX	W-11		Pipe-to-Elbow	AUG	-	-	-	-	-	-	-	-	-	-	-	-
2	Core Spray B			OWN	-	-	-	-	-	-	-	-	-	-	-	-
				PRE	-	-	-	-	-	-	-	-	-	-	-	-

MONTICELLO Nuclear Generating Plant
3rd Interval ISI Plan Rev. 3 June 1, 1992 to May 31, 2002

Category, ItemNO, Class	Summary / CompID / System	Scope / Method / Procedure	Iso No. Comp. Desc. Code Case /Note		Period 1				Period 2				Period 3			
					1	2	3	4	1	2	3	4	1	2	3	4
C-F-2	100482		ISI-13142-26-C	ISI	-	-	-	-	-	-	-	-	-	-	-	-
CX.XX	W-12		Elbow-to-Pipe	AUG	-	-	-	-	-	-	-	-	-	-	-	-
2	Core Spray B			OWN	-	-	-	-	-	-	-	-	-	-	-	-
				PRE	-	-	-	-	-	-	-	-	-	-	-	-
C-F-2	100483		ISI-13142-26-C	ISI	-	-	-	-	-	-	-	-	-	-	-	-
CX.XX	W-13		Pipe-to-Elbow	AUG	-	-	-	-	-	-	-	-	-	-	-	-
2	Core Spray B			OWN	-	-	-	-	-	-	-	-	-	-	-	-
				PRE	-	-	-	-	-	-	-	-	-	-	-	-
C-F-2	100484		ISI-13142-26-C	ISI	-	-	-	-	-	-	-	-	-	-	-	-
CX.XX	W-14		Elbow-to-Pipe	AUG	-	-	-	-	-	-	-	-	-	-	-	-
2	Core Spray B			OWN	-	-	-	-	-	-	-	-	-	-	-	-
				PRE	-	-	-	-	-	-	-	-	-	-	-	-
C-F-2	100485		ISI-13142-26-C	ISI	-	-	-	-	-	-	-	-	-	-	-	-
CX.XX	W-15		Pipe-to-Elbow	AUG	-	-	-	-	-	-	-	-	-	-	-	-
2	Core Spray B			OWN	-	-	-	-	-	-	-	-	-	-	-	-
				PRE	-	-	-	-	-	-	-	-	-	-	-	-
C-F-2	100486		ISI-13142-26-C	ISI	-	-	-	-	-	-	-	-	-	-	-	-
CX.XX	W-16		Elbow-to-Pipe	AUG	-	-	-	-	-	-	-	-	-	-	-	-
2	Core Spray B			OWN	-	-	-	-	-	-	-	-	-	-	-	-
				PRE	-	-	-	-	-	-	-	-	-	-	-	-
C-F-2	100487		ISI-13142-26-C	ISI	-	-	-	-	-	-	-	-	-	-	-	-
CX.XX	W-17		Pipe-to-Elbow	AUG	-	-	-	-	-	-	-	-	-	-	-	-
2	Core Spray B			OWN	-	-	-	-	-	-	-	-	-	-	-	-
				PRE	-	-	-	-	-	-	-	-	-	-	-	-
C-F-2	100488		ISI-13142-26-C	ISI	-	-	-	-	-	-	-	-	-	-	-	-
CX.XX	W-18		Elbow-to-Pipe	AUG	-	-	-	-	-	-	-	-	-	-	-	-
2	Core Spray B			OWN	-	-	-	-	-	-	-	-	-	-	-	-
				PRE	-	-	-	-	-	-	-	-	-	-	-	-
C-F-2	100489		ISI-13142-26-C	ISI	-	-	-	-	-	-	-	-	-	-	-	-
CX.XX	W-19		Pipe-to-Flange	AUG	-	-	-	-	-	-	-	-	-	-	-	-
2	Core Spray B			OWN	-	-	-	-	-	-	-	-	-	-	-	-
				PRE	-	-	-	-	-	-	-	-	-	-	-	-
C-F-2	100490		ISI-13142-26-C	ISI	-	-	-	-	-	-	-	-	-	-	-	-
CX.XX	W-20		Flange-to-Pipe	AUG	-	-	-	-	-	-	-	-	-	-	-	-
2	Core Spray B			OWN	-	-	-	-	-	-	-	-	-	-	-	-
				PRE	-	-	-	-	-	-	-	-	-	-	-	-
B-G-2	100492	ISI/VT/ISI-VT-1.0	ISI-13142-31-A	ISI	c	-	-	-	-	-	-	-	-	-	-	-
B7.70	B- 1		Valve Bolts	AUG	-	-	-	-	-	-	-	-	-	-	-	-
1	Core Spray A			OWN	-	-	-	-	-	-	-	-	-	-	-	-
				PRE	-	-	-	-	-	-	-	-	-	-	-	-

MONTICELLO Nuclear Generating Plant
3rd Interval ISI Plan Rev. 3 June 1, 1992 to May 31, 2002

Category, ItemNO, Class	Summary / CompID / System	Scope / Method / Procedure	Iso No. Comp. Desc. Code Case /Note		Period 1				Period 2				Period 3			
					1	2	3	4	1	2	3	4	1	2	3	4
B-G-2	100493	ISI/VT/ISI-VT-1.0	ISI-13142-31-A	ISI	-	-	-	-	-	c	-	-	-	-	-	-
B7.70	B- 2		Valve Bolts	AUG	-	-	-	-	-	-	-	-	-	-	-	-
1	Core Spray A			OWN	-	-	-	-	-	-	-	-	-	-	-	-
				PRE	-	-	-	-	-	-	-	-	-	-	-	-
B-G-2	100494	ISI/VT/ISI-VT-1.0	ISI-13142-31-A	ISI	-	-	-	-	-	c	-	-	-	-	-	-
B7.70	B- 3		Valve Bolts	AUG	-	-	-	-	-	-	-	-	-	-	-	-
1	Core Spray A			OWN	-	-	-	-	-	-	-	-	-	-	-	-
				PRE	-	-	-	-	-	-	-	-	-	-	-	-
F-C	100495	ISI/VT/ISI-VT-2.0	ISI-13142-31-A	ISI	-	-	-	-	-	c	-	-	-	-	-	-
F-A,B,C	H- 1		Spring / Clamp	AUG	-	-	-	-	-	-	-	-	-	-	-	-
1	Core Spray A			OWN	-	-	-	-	-	-	-	-	-	-	-	-
				PRE	-	-	-	-	-	-	-	-	-	-	-	-
F-C	100496	ISI/VT/ISI-VT-2.0	ISI-13142-31-A	ISI	-	-	-	-	-	c	-	-	-	-	-	-
F-A,B,C	H- 2		Spring / Clamp	AUG	-	-	-	-	-	-	-	-	-	-	-	-
1	Core Spray A			OWN	-	-	-	-	-	-	-	-	-	-	-	-
				PRE	-	-	-	-	-	-	-	-	-	-	-	-
B-M-2	100497	ISI/VT/ISI-VT-3.0	ISI-13142-31-A	ISI	c	-	-	-	-	-	-	-	-	-	-	-
B12.50	V- 1		Valve Int Surfaces	AUG	-	-	-	-	-	-	-	-	-	-	-	-
1	Core Spray A		NOTE: HH, RELIEF 4	OWN	-	-	-	-	-	-	-	-	-	-	-	-
				PRE	-	-	-	-	-	-	-	-	-	-	-	-
B-M-2	100498		ISI-13142-31-A	ISI	-	-	-	-	-	-	-	-	-	-	-	-
B12.50	V- 2		Valve Int Surfaces	AUG	-	-	-	-	-	-	-	-	-	-	-	-
1	Core Spray A		NOTE: HH, RELIEF 4	OWN	-	-	-	-	-	-	-	-	-	-	-	-
				PRE	-	-	-	-	-	-	-	-	-	-	-	-
B-M-2	100499		ISI-13142-31-A	ISI	-	-	-	-	-	-	-	-	-	-	-	-
B12.50	V- 3		Valve Int Surfaces	AUG	-	-	-	-	-	-	-	-	-	-	-	-
1	Core Spray A		NOTE: HH, RELIEF 4	OWN	-	-	-	-	-	-	-	-	-	-	-	-
				PRE	-	-	-	-	-	-	-	-	-	-	-	-
B-J	100500	ISI/MT/ISI-MT-1	ISI-13142-31-A	ISI	-	c	-	-	-	-	-	-	-	-	-	-
B9.11	W- 1	ISI/UT/ISI-UT-1	Valve-to-Pipe	AUG	-	-	-	-	-	-	-	-	-	-	-	-
1	Core Spray A		NOTE: MM	OWN	-	-	-	-	-	-	-	-	-	-	-	-
				PRE	-	-	-	-	-	-	-	-	-	-	-	-
B-J	100501	ISI/MT/ISI-MT-1	ISI-13142-31-A	ISI	-	c	-	-	-	-	-	-	-	-	-	-
B9.11	W- 2	ISI/UT/ISI-UT-1	Pipe-to-Pipe	AUG	-	-	-	-	-	-	-	-	-	-	-	-
1	Core Spray A		NOTE: MM	OWN	-	-	-	-	-	-	-	-	-	-	-	-
				PRE	-	-	-	-	-	-	-	-	-	-	-	-
B-J	100502	ISI/MT/ISI-MT-1	ISI-13142-31-A	ISI	-	-	-	-	-	-	-	-	s	-	-	-
B9.11	W- 3	ISI/UT/ISI-UT-1	Pipe-to-Pipe	AUG	-	-	-	-	-	-	-	-	-	-	-	-
1	Core Spray A			OWN	-	-	-	-	-	-	-	-	-	-	-	-
				PRE	-	-	-	-	-	-	-	-	-	-	-	-

MONTICELLO Nuclear Generating Plant
3rd Interval ISI Plan Rev. 3 June 1, 1992 to May 31, 2002

Category, ItemNO, Class	Summary / CompID / System	Scope / Method / Procedure	Iso No. Comp. Desc. Code Case /Note		Period 1				Period 2				Period 3			
					1	2	3	4	1	2	3	4	1	2	3	4
B-J	100503		ISI-13142-31-A	ISI	-	-	-	-	-	-	-	-	-	-	-	-
B9.11	W- 4		Pipe-to-Pipe	AUG	-	-	-	-	-	-	-	-	-	-	-	-
1	Core Spray A		NOTE: DD	OWN	-	-	-	-	-	-	-	-	-	-	-	-
				PRE	-	-	-	-	-	-	-	-	-	-	-	-
B-J	100504		ISI-13142-31-A	ISI	-	-	-	-	-	-	-	-	-	-	-	-
B9.11	W- 5		Pipe-to-Pipe	AUG	-	-	-	-	-	-	-	-	-	-	-	-
1	Core Spray A			OWN	-	-	-	-	-	-	-	-	-	-	-	-
				PRE	-	-	-	-	-	-	-	-	-	-	-	-
B-J	100505		ISI-13142-31-A	ISI	-	-	-	-	-	-	-	-	-	-	-	-
B9.11	W- 6		Pipe-to-Elbow	AUG	-	-	-	-	-	-	-	-	-	-	-	-
1	Core Spray A			OWN	-	-	-	-	-	-	-	-	-	-	-	-
				PRE	-	-	-	-	-	-	-	-	-	-	-	-
B-J	100506		ISI-13142-31-A	ISI	-	-	-	-	-	-	-	-	-	-	-	-
B9.11	W- 7		Elbow-to-Pipe	AUG	-	-	-	-	-	-	-	-	-	-	-	-
1	Core Spray A			OWN	-	-	-	-	-	-	-	-	-	-	-	-
				PRE	-	-	-	-	-	-	-	-	-	-	-	-
B-J	100507	ISI/PT/ISI-PT-1	ISI-13142-31-A	ISI	-	-	-	-	-	c	-	-	-	-	-	-
B9.11	W- 8	ISI/UT/ISI-UT-16	Pipe-to-Valve	AUG	-	-	-	-	-	-	-	-	-	-	-	-
1	Core Spray A		NOTE: CC	OWN	-	-	-	-	-	-	-	-	-	-	-	-
				PRE	-	-	-	-	-	-	-	-	-	-	-	-
B-J	100508	ISI/PT/ISI-PT-1	ISI-13142-31-A	ISI	-	-	-	-	-	c	-	-	-	-	-	-
B9.11	W- 9	ISI/UT/ISI-UT-16	Valve-to-Pipe	AUG	-	-	-	-	-	-	-	-	-	-	-	-
1	Core Spray A		NOTE: CC	OWN	-	-	-	-	-	-	-	-	-	-	-	-
				PRE	-	-	-	-	-	-	-	-	-	-	-	-
B-J	100509		ISI-13142-31-A	ISI	-	-	-	-	-	-	-	-	-	-	-	-
B9.11	W-10		Pipe-to-Bent Pipe	AUG	-	-	-	-	-	-	-	-	-	-	-	-
1	Core Spray A			OWN	-	-	-	-	-	-	-	-	-	-	-	-
				PRE	-	-	-	-	-	-	-	-	-	-	-	-
B-J	100510		ISI-13142-31-A	ISI	-	-	-	-	-	-	-	-	-	-	-	-
B9.11	W-11		Bent Pipe-to-Valve	AUG	-	-	-	-	-	-	-	-	-	-	-	-
1	Core Spray A			OWN	-	-	-	-	-	-	-	-	-	-	-	-
				PRE	-	-	-	-	-	-	-	-	-	-	-	-
B-J	100511		ISI-13142-31-A	ISI	-	-	-	-	-	-	-	-	-	-	-	-
B9.11	W-12		Valve-to-Bent Pipe	AUG	-	-	-	-	-	-	-	-	-	-	-	-
1	Core Spray A			OWN	-	-	-	-	-	-	-	-	-	-	-	-
				PRE	-	-	-	-	-	-	-	-	-	-	-	-
B-J	100512		ISI-13142-31-A	ISI	-	-	-	-	-	-	-	-	-	-	-	-
B9.11	W-13		Bent Pipe-to-B.Pipe	AUG	-	-	-	-	-	-	-	-	-	-	-	-
1	Core Spray A			OWN	-	-	-	-	-	-	-	-	-	-	-	-
				PRE	-	-	-	-	-	-	-	-	-	-	-	-

MONTICELLO Nuclear Generating Plant
3rd Interval ISI Plan Rev. 3 June 1, 1992 to May 31, 2002

Category, ItemNO, Class	Summary / CompID / System	Scope / Method / Procedure	Iso No. Comp. Desc. Code Case /Note		Period 1				Period 2				Period 3			
					1	2	3	4	1	2	3	4	1	2	3	4
B-J	100513	ISI/MT/ISI-MT-1	ISI-13142-31-A	ISI	c	-	-	-	-	-	-	-	-	-	-	-
B9.11	W-14	ISI/UT/ISI-UT-1	Bent Pipe / Safe End	AUG	-	-	-	-	-	-	-	-	-	-	-	-
1	Core Spray A			OWN	-	-	-	-	-	-	-	-	-	-	-	-
				PRE	-	-	-	-	-	-	-	-	-	-	-	-
B-F	100514	ISI/MT/ISI-MT-1	ISI-13142-31-A	ISI	c	-	-	-	-	-	-	-	-	-	-	-
B5.10	W-15	ISI/UT/ISI-UT-1	Safe End-to-Nozzle	AUG	-	-	-	-	-	-	-	-	-	-	-	-
1	Core Spray A		NOTE: CC	OWN	-	-	-	-	-	-	-	-	-	-	-	-
				PRE	-	-	-	-	-	-	-	-	-	-	-	-
F-B	100515	ISI/VT/ISI-VT-2.0	ISI-13142-31-B	ISI	-	-	-	-	c	-	-	-	-	-	-	-
F-A,B,C	H- 1		Valve Strap	AUG	-	-	-	-	-	-	-	-	-	-	-	-
2	Core Spray A			OWN	-	-	-	-	-	-	-	-	-	-	-	-
				PRE	-	-	-	-	-	-	-	-	-	-	-	-
F-C	100516	ISI/VT/ISI-VT-2.0	ISI-13142-31-B	ISI	-	-	-	-	c	-	-	-	-	-	-	-
F-A,B,C	H- 2		Double Spring/Clamp	AUG	-	-	-	-	-	-	-	-	-	-	-	-
2	Core Spray A			OWN	-	-	-	-	-	-	-	-	-	-	-	-
				PRE	-	-	-	-	-	-	-	-	-	-	-	-
C-F-2	100518		ISI-13142-31-B	ISI	-	-	-	-	-	-	-	-	-	-	-	-
CX.XX	W- 1		Tee-to-Valve	AUG	-	-	-	-	-	-	-	-	-	-	-	-
2	Core Spray A			OWN	-	-	-	-	-	-	-	-	-	-	-	-
				PRE	-	-	-	-	-	-	-	-	-	-	-	-
C-F-2	100519		ISI-13142-31-B	ISI	-	-	-	-	-	-	-	-	-	-	-	-
CX.XX	W- 2		Valve-to-Reducer	AUG	-	-	-	-	-	-	-	-	-	-	-	-
2	Core Spray A			OWN	-	-	-	-	-	-	-	-	-	-	-	-
				PRE	-	-	-	-	-	-	-	-	-	-	-	-
C-F-2	100520		ISI-13142-31-B	ISI	-	-	-	-	-	-	-	-	-	-	-	-
CX.XX	W- 3		Reducer-to-Flange	AUG	-	-	-	-	-	-	-	-	-	-	-	-
2	Core Spray A			OWN	-	-	-	-	-	-	-	-	-	-	-	-
				PRE	-	-	-	-	-	-	-	-	-	-	-	-
C-F-2	100521		ISI-13142-31-B	ISI	-	-	-	-	-	-	-	-	-	-	-	-
CX.XX	W- 4		Tee-to-Pipe	AUG	-	-	-	-	-	-	-	-	-	-	-	-
2	Core Spray A			OWN	-	-	-	-	-	-	-	-	-	-	-	-
				PRE	-	-	-	-	-	-	-	-	-	-	-	-
C-F-2	100522		ISI-13142-31-B	ISI	-	-	-	-	-	-	-	-	-	-	-	-
CX.XX	W- 5		Pipe-to-Pipe	AUG	-	-	-	-	-	-	-	-	-	-	-	-
2	Core Spray A			OWN	-	-	-	-	-	-	-	-	-	-	-	-
				PRE	-	-	-	-	-	-	-	-	-	-	-	-
C-F-2	100523		ISI-13142-31-B	ISI	-	-	-	-	-	-	-	-	-	-	-	-
CX.XX	W- 6		Pipe-to-Pipe	AUG	-	-	-	-	-	-	-	-	-	-	-	-
2	Core Spray A			OWN	-	-	-	-	-	-	-	-	-	-	-	-
				PRE	-	-	-	-	-	-	-	-	-	-	-	-

MONTICELLO Nuclear Generating Plant
3rd Interval ISI Plan Rev. 3 June 1, 1992 to May 31, 2002

Category, ItemNO, Class	Summary / CompID / System	Scope / Method / Procedure	Iso No. Comp. Desc. Code Case /Note		Period 1				Period 2				Period 3			
					1	2	3	4	1	2	3	4	1	2	3	4
C-F-2	100524		ISI-13142-31-B	ISI	-	-	-	-	-	-	-	-	-	-	-	-
CX.XX	W- 7		Pipe-to-Elbow	AUG	-	-	-	-	-	-	-	-	-	-	-	-
2	Core Spray A			OWN	-	-	-	-	-	-	-	-	-	-	-	-
				PRE	-	-	-	-	-	-	-	-	-	-	-	-
C-F-2	100525		ISI-13142-31-B	ISI	-	-	-	-	-	-	-	-	-	-	-	-
CX.XX	W- 8		Elbow-to-Pipe	AUG	-	-	-	-	-	-	-	-	-	-	-	-
2	Core Spray A			OWN	-	-	-	-	-	-	-	-	-	-	-	-
				PRE	-	-	-	-	-	-	-	-	-	-	-	-
C-F-2	100526		ISI-13142-31-B	ISI	-	-	-	-	-	-	-	-	-	-	-	-
CX.XX	W- 9		Pipe-to-Elbow	AUG	-	-	-	-	-	-	-	-	-	-	-	-
2	Core Spray A			OWN	-	-	-	-	-	-	-	-	-	-	-	-
				PRE	-	-	-	-	-	-	-	-	-	-	-	-
C-F-2	100527		ISI-13142-31-B	ISI	-	-	-	-	-	-	-	-	-	-	-	-
CX.XX	W-10		Elbow-to-Pipe	AUG	-	-	-	-	-	-	-	-	-	-	-	-
2	Core Spray A			OWN	-	-	-	-	-	-	-	-	-	-	-	-
				PRE	-	-	-	-	-	-	-	-	-	-	-	-
C-F-2	100528		ISI-13142-31-B	ISI	-	-	-	-	-	-	-	-	-	-	-	-
CX.XX	W-11		Pipe-to-Elbow	AUG	-	-	-	-	-	-	-	-	-	-	-	-
2	Core Spray A			OWN	-	-	-	-	-	-	-	-	-	-	-	-
				PRE	-	-	-	-	-	-	-	-	-	-	-	-
C-F-2	100529		ISI-13142-31-B	ISI	-	-	-	-	-	-	-	-	-	-	-	-
CX.XX	W-12		Elbow-to-Pipe	AUG	-	-	-	-	-	-	-	-	-	-	-	-
2	Core Spray A			OWN	-	-	-	-	-	-	-	-	-	-	-	-
				PRE	-	-	-	-	-	-	-	-	-	-	-	-
C-F-2	100530		ISI-13142-31-B	ISI	-	-	-	-	-	-	-	-	-	-	-	-
CX.XX	W-13		Pipe-to-Reducer	AUG	-	-	-	-	-	-	-	-	-	-	-	-
2	Core Spray A			OWN	-	-	-	-	-	-	-	-	-	-	-	-
				PRE	-	-	-	-	-	-	-	-	-	-	-	-
C-F-2	100531	ISI/MT/ISI-MT-1	ISI-13142-31-B	ISI	-	-	-	-	c	-	-	-	-	-	-	-
C5.51	W-14	ISI/UT/ISI-UT-1	Reducer-to-Valve	AUG	-	-	-	-	-	-	-	-	-	-	-	-
2	Core Spray A		NOTE: JJ	OWN	-	-	-	-	-	-	-	-	-	-	-	-
				PRE	-	-	-	-	-	-	-	-	-	-	-	-
C-F-2	100532	ISI/MT/ISI-MT-1	ISI-13142-31-B	ISI	-	-	-	-	c	-	-	-	-	-	-	-
C5.51	W-15	ISI/UT/ISI-UT-1	Valve-to-Pipe	AUG	-	-	-	-	-	-	-	-	-	-	-	-
2	Core Spray A		NOTE: JJ	OWN	-	-	-	-	-	-	-	-	-	-	-	-
				PRE	-	-	-	-	-	-	-	-	-	-	-	-
C-F-2	100533	ISI/MT/ISI-MT-1	ISI-13142-31-B	ISI	-	-	-	-	c	-	-	-	-	-	-	-
C5.51	W-16	ISI/UT/ISI-UT-1	Pipe-to-Elbow	AUG	-	-	-	-	-	-	-	-	-	-	-	-
2	Core Spray A		NOTE: JJ	OWN	-	-	-	-	-	-	-	-	-	-	-	-
				PRE	-	-	-	-	-	-	-	-	-	-	-	-

MONTICELLO Nuclear Generating Plant
3rd Interval ISI Plan Rev. 3 June 1, 1992 to May 31, 2002

Category, ItemNO, Class	Summary / CompID / System	Scope / Method / Procedure	Iso No. Comp. Desc. Code Case /Note		Period 1				Period 2				Period 3			
					1	2	3	4	1	2	3	4	1	2	3	4
C-F-2	100534	ISI/MT/ISI-MT-1	ISI-13142-31-B	ISI	-	-	-	-	c	-	-	-	-	-	-	-
C5.51	W-17	ISI/UT/ISI-UT-1	Elbow-to-Pipe	AUG	-	-	-	-	-	-	-	-	-	-	-	-
2	Core Spray A		NOTE: JJ	OWN	-	-	-	-	-	-	-	-	-	-	-	-
				PRE	-	-	-	-	-	-	-	-	-	-	-	-
C-F-2	100535	ISI/MT/ISI-MT-1	ISI-13142-31-B	ISI	-	-	-	-	c	-	-	-	-	-	-	-
C5.51	W-18	ISI/UT/ISI-UT-1	Pipe-to-Elbow	AUG	-	-	-	-	-	-	-	-	-	-	-	-
2	Core Spray A		NOTE: JJ	OWN	-	-	-	-	-	-	-	-	-	-	-	-
				PRE	-	-	-	-	-	-	-	-	-	-	-	-
C-F-2	100536	ISI/MT/ISI-MT-1	ISI-13142-31-B	ISI	-	-	-	-	c	-	-	-	-	-	-	-
C5.51	W-19	ISI/UT/ISI-UT-1	Elbow-to-Valve	AUG	-	-	-	-	-	-	-	-	-	-	-	-
2	Core Spray A		NOTE: JJ	OWN	-	-	-	-	-	-	-	-	-	-	-	-
				PRE	-	-	-	-	-	-	-	-	-	-	-	-
C-F-2	100537		ISI-13142-31-C	ISI	-	-	-	-	-	-	-	-	-	-	-	-
CX.XX	W- 1		Pump-to-Elbow	AUG	-	-	-	-	-	-	-	-	-	-	-	-
2	Core Spray A			OWN	-	-	-	-	-	-	-	-	-	-	-	-
				PRE	-	-	-	-	-	-	-	-	-	-	-	-
C-F-2	100538		ISI-13142-31-C	ISI	-	-	-	-	-	-	-	-	-	-	-	-
CX.XX	W- 2		Elbow-to-Pipe	AUG	-	-	-	-	-	-	-	-	-	-	-	-
2	Core Spray A			OWN	-	-	-	-	-	-	-	-	-	-	-	-
				PRE	-	-	-	-	-	-	-	-	-	-	-	-
C-F-2	100539		ISI-13142-31-C	ISI	-	-	-	-	-	-	-	-	-	-	-	-
CX.XX	W- 3		Pipe-to-Valve	AUG	-	-	-	-	-	-	-	-	-	-	-	-
2	Core Spray A			OWN	-	-	-	-	-	-	-	-	-	-	-	-
				PRE	-	-	-	-	-	-	-	-	-	-	-	-
C-F-2	100540		ISI-13142-31-C	ISI	-	-	-	-	-	-	-	-	-	-	-	-
CX.XX	W- 4		Valve-to-Pipe	AUG	-	-	-	-	-	-	-	-	-	-	-	-
2	Core Spray A			OWN	-	-	-	-	-	-	-	-	-	-	-	-
				PRE	-	-	-	-	-	-	-	-	-	-	-	-
C-F-2	100541		ISI-13142-31-C	ISI	-	-	-	-	-	-	-	-	-	-	-	-
CX.XX	W- 5		Pipe-to-Elbow	AUG	-	-	-	-	-	-	-	-	-	-	-	-
2	Core Spray A			OWN	-	-	-	-	-	-	-	-	-	-	-	-
				PRE	-	-	-	-	-	-	-	-	-	-	-	-
C-F-2	100542		ISI-13142-31-C	ISI	-	-	-	-	-	-	-	-	-	-	-	-
CX.XX	W- 6		Elbow-to-Elbow	AUG	-	-	-	-	-	-	-	-	-	-	-	-
2	Core Spray A			OWN	-	-	-	-	-	-	-	-	-	-	-	-
				PRE	-	-	-	-	-	-	-	-	-	-	-	-
C-F-2	100543		ISI-13142-31-C	ISI	-	-	-	-	-	-	-	-	-	-	-	-
CX.XX	W- 7		Elbow-to-Pipe	AUG	-	-	-	-	-	-	-	-	-	-	-	-
2	Core Spray A			OWN	-	-	-	-	-	-	-	-	-	-	-	-
				PRE	-	-	-	-	-	-	-	-	-	-	-	-

MONTICELLO Nuclear Generating Plant
3rd Interval ISI Plan Rev. 3 June 1, 1992 to May 31, 2002

Category, ItemNO, Class	Summary / CompID / System	Scope / Method / Procedure	Iso No. Comp. Desc. Code Case /Note		Period 1				Period 2				Period 3			
					1	2	3	4	1	2	3	4	1	2	3	4
C-F-2	100544		ISI-13142-31-C	ISI	-	-	-	-	-	-	-	-	-	-	-	-
CX.XX	W- 8		Pipe-to-Elbow	AUG	-	-	-	-	-	-	-	-	-	-	-	-
2	Core Spray A			OWN	-	-	-	-	-	-	-	-	-	-	-	-
				PRE	-	-	-	-	-	-	-	-	-	-	-	-
C-F-2	100545		ISI-13142-31-C	ISI	-	-	-	-	-	-	-	-	-	-	-	-
CX.XX	W- 9		Elbow-to-Pipe	AUG	-	-	-	-	-	-	-	-	-	-	-	-
2	Core Spray A			OWN	-	-	-	-	-	-	-	-	-	-	-	-
				PRE	-	-	-	-	-	-	-	-	-	-	-	-
C-F-2	100546		ISI-13142-31-C	ISI	-	-	-	-	-	-	-	-	-	-	-	-
CX.XX	W-10		Pipe-to-Flange	AUG	-	-	-	-	-	-	-	-	-	-	-	-
2	Core Spray A			OWN	-	-	-	-	-	-	-	-	-	-	-	-
				PRE	-	-	-	-	-	-	-	-	-	-	-	-
C-F-2	100547		ISI-13142-31-C	ISI	-	-	-	-	-	-	-	-	-	-	-	-
CX.XX	W-11		Flange-to-Pipe	AUG	-	-	-	-	-	-	-	-	-	-	-	-
2	Core Spray A			OWN	-	-	-	-	-	-	-	-	-	-	-	-
				PRE	-	-	-	-	-	-	-	-	-	-	-	-
C-F-2	100548		ISI-13142-31-C	ISI	-	-	-	-	-	-	-	-	-	-	-	-
CX.XX	W-12		Pipe-to-Elbow	AUG	-	-	-	-	-	-	-	-	-	-	-	-
2	Core Spray A			OWN	-	-	-	-	-	-	-	-	-	-	-	-
				PRE	-	-	-	-	-	-	-	-	-	-	-	-
C-F-2	100549		ISI-13142-31-C	ISI	-	-	-	-	-	-	-	-	-	-	-	-
CX.XX	W-13		Elbow-to-Pipe	AUG	-	-	-	-	-	-	-	-	-	-	-	-
2	Core Spray A			OWN	-	-	-	-	-	-	-	-	-	-	-	-
				PRE	-	-	-	-	-	-	-	-	-	-	-	-
C-F-2	100550		ISI-13142-31-C	ISI	-	-	-	-	-	-	-	-	-	-	-	-
CX.XX	W-14		Pipe-to-Elbow	AUG	-	-	-	-	-	-	-	-	-	-	-	-
2	Core Spray A			OWN	-	-	-	-	-	-	-	-	-	-	-	-
				PRE	-	-	-	-	-	-	-	-	-	-	-	-
C-F-2	100551		ISI-13142-31-C	ISI	-	-	-	-	-	-	-	-	-	-	-	-
CX.XX	W-15		Elbow-to-Pipe	AUG	-	-	-	-	-	-	-	-	-	-	-	-
2	Core Spray A			OWN	-	-	-	-	-	-	-	-	-	-	-	-
				PRE	-	-	-	-	-	-	-	-	-	-	-	-
C-F-2	100552		ISI-13142-31-C	ISI	-	-	-	-	-	-	-	-	-	-	-	-
CX.XX	W-16		Pipe-to-Elbow	AUG	-	-	-	-	-	-	-	-	-	-	-	-
2	Core Spray A			OWN	-	-	-	-	-	-	-	-	-	-	-	-
				PRE	-	-	-	-	-	-	-	-	-	-	-	-
C-F-2	100553		ISI-13142-31-C	ISI	-	-	-	-	-	-	-	-	-	-	-	-
CX.XX	W-17		Elbow-to-Elbow	AUG	-	-	-	-	-	-	-	-	-	-	-	-
2	Core Spray A			OWN	-	-	-	-	-	-	-	-	-	-	-	-
				PRE	-	-	-	-	-	-	-	-	-	-	-	-

MONTICELLO Nuclear Generating Plant
3rd Interval ISI Plan Rev. 3 June 1, 1992 to May 31, 2002

Category, ItemNO, Class	Summary / CompID / System	Scope / Method / Procedure	Iso No. Comp. Desc. Code Case /Note		Period 1				Period 2				Period 3			
					1	2	3	4	1	2	3	4	1	2	3	4
C-F-2	100554		ISI-13142-31-C	ISI	-	-	-	-	-	-	-	-	-	-	-	-
CX.XX	W-18		Elbow-to-Pipe	AUG	-	-	-	-	-	-	-	-	-	-	-	-
2	Core Spray A			OWN	-	-	-	-	-	-	-	-	-	-	-	-
				PRE	-	-	-	-	-	-	-	-	-	-	-	-
C-F-2	100555		ISI-13142-31-C	ISI	-	-	-	-	-	-	-	-	-	-	-	-
CX.XX	W-19		Pipe-to-Elbow	AUG	-	-	-	-	-	-	-	-	-	-	-	-
2	Core Spray A			OWN	-	-	-	-	-	-	-	-	-	-	-	-
				PRE	-	-	-	-	-	-	-	-	-	-	-	-
C-F-2	100556		ISI-13142-31-C	ISI	-	-	-	-	-	-	-	-	-	-	-	-
CX.XX	W-20		Elbow-to-Pipe	AUG	-	-	-	-	-	-	-	-	-	-	-	-
2	Core Spray A			OWN	-	-	-	-	-	-	-	-	-	-	-	-
				PRE	-	-	-	-	-	-	-	-	-	-	-	-
C-F-2	100557		ISI-13142-31-C	ISI	-	-	-	-	-	-	-	-	-	-	-	-
CX.XX	W-21		Elbow-to-Elbow	AUG	-	-	-	-	-	-	-	-	-	-	-	-
2	Core Spray A			OWN	-	-	-	-	-	-	-	-	-	-	-	-
				PRE	-	-	-	-	-	-	-	-	-	-	-	-
C-F-2	100558		ISI-13142-31-C	ISI	-	-	-	-	-	-	-	-	-	-	-	-
CX.XX	W-22		Elbow-to-Pipe	AUG	-	-	-	-	-	-	-	-	-	-	-	-
2	Core Spray A			OWN	-	-	-	-	-	-	-	-	-	-	-	-
				PRE	-	-	-	-	-	-	-	-	-	-	-	-
C-F-2	100559		ISI-13142-31-C	ISI	-	-	-	-	-	-	-	-	-	-	-	-
CX.XX	W-23		Pipe-to-Flange	AUG	-	-	-	-	-	-	-	-	-	-	-	-
2	Core Spray A			OWN	-	-	-	-	-	-	-	-	-	-	-	-
				PRE	-	-	-	-	-	-	-	-	-	-	-	-
C-F-2	100560		ISI-13142-31-C	ISI	-	-	-	-	-	-	-	-	-	-	-	-
CX.XX	W-24		Flange-to-Pipe	AUG	-	-	-	-	-	-	-	-	-	-	-	-
2	Core Spray A			OWN	-	-	-	-	-	-	-	-	-	-	-	-
				PRE	-	-	-	-	-	-	-	-	-	-	-	-
C-F-2	100561		ISI-13142-31-C	ISI	-	-	-	-	-	-	-	-	-	-	-	-
CX.XX	W-25		Pipe-to-Elbow	AUG	-	-	-	-	-	-	-	-	-	-	-	-
2	Core Spray A			OWN	-	-	-	-	-	-	-	-	-	-	-	-
				PRE	-	-	-	-	-	-	-	-	-	-	-	-
C-F-2	100562		ISI-13142-31-C	ISI	-	-	-	-	-	-	-	-	-	-	-	-
CX.XX	W-26		Elbow-to-Elbow	AUG	-	-	-	-	-	-	-	-	-	-	-	-
2	Core Spray A			OWN	-	-	-	-	-	-	-	-	-	-	-	-
				PRE	-	-	-	-	-	-	-	-	-	-	-	-
C-F-2	100563		ISI-13142-31-C	ISI	-	-	-	-	-	-	-	-	-	-	-	-
CX.XX	W-27		Elbow-to-Elbow	AUG	-	-	-	-	-	-	-	-	-	-	-	-
2	Core Spray A			OWN	-	-	-	-	-	-	-	-	-	-	-	-
				PRE	-	-	-	-	-	-	-	-	-	-	-	-

MONTICELLO Nuclear Generating Plant
3rd Interval ISI Plan Rev. 3 June 1, 1992 to May 31, 2002

Category, ItemNO, Class	Summary / CompID / System	Scope / Method / Procedure	Iso No. Comp. Desc. Code Case /Note		Period 1				Period 2				Period 3			
					1	2	3	4	1	2	3	4	1	2	3	4
C-F-2	100564		ISI-13142-31-C	ISI	-	-	-	-	-	-	-	-	-	-	-	-
CX.XX	W-28		Elbow-to-Pipe	AUG	-	-	-	-	-	-	-	-	-	-	-	-
2	Core Spray A			OWN	-	-	-	-	-	-	-	-	-	-	-	-
				PRE	-	-	-	-	-	-	-	-	-	-	-	-
C-F-2	100565		ISI-13142-31-C	ISI	-	-	-	-	-	-	-	-	-	-	-	-
CX.XX	W-29		Pipe-to-Tee	AUG	-	-	-	-	-	-	-	-	-	-	-	-
2	Core Spray A			OWN	-	-	-	-	-	-	-	-	-	-	-	-
				PRE	-	-	-	-	-	-	-	-	-	-	-	-
B-G-2	100566	ISI/VT/ISI-VT-1.0	ISI-13142-33-A	ISI	c	B	-	-	-	-	-	-	-	-	-	-
B7.50	B- 1		Flange Bolts @ W-12	AUG	-	-	-	-	-	-	-	-	-	-	-	-
1	Main Steam A			OWN	-	-	-	-	-	-	-	-	-	-	-	-
				PRE	-	-	-	-	-	-	-	-	-	-	-	-
B-G-2	100567	ISI/VT/ISI-VT-1.0	ISI-13142-33-A	ISI	-	c	-	-	-	-	-	-	-	-	-	-
B7.50	B- 2		Flange Bolts @ W-14	AUG	-	-	-	-	-	-	-	-	-	-	-	-
1	Main Steam A			OWN	-	-	-	-	-	-	-	-	-	-	-	-
				PRE	-	-	-	-	-	-	-	-	-	-	-	-
B-G-2	100568	ISI/VT/ISI-VT-1.0	ISI-13142-33-A	ISI	c	B	-	-	-	-	-	-	-	-	-	-
B7.50	B- 3		Flange Bolts @ W-16	AUG	-	-	-	-	-	-	-	-	-	-	-	-
1	Main Steam A			OWN	-	-	-	-	-	-	-	-	-	-	-	-
				PRE	-	-	-	-	-	-	-	-	-	-	-	-
B-G-2	100569	ISI/VT/ISI-VT-1.0	ISI-13142-33-A	ISI	-	-	-	-	-	-	-	-	s	-	-	-
B7.50	B- 4		Flange Bolts @ W-18	AUG	-	-	-	-	-	-	-	-	-	-	-	-
1	Main Steam A			OWN	-	-	-	-	-	-	-	-	-	-	-	-
				PRE	-	-	-	-	-	-	-	-	-	-	-	-
B-G-2	100570	ISI/VT/ISI-VT-1.0	ISI-13142-33-A	ISI	-	-	-	-	-	-	-	-	s	-	-	-
B7.50	B- 5		Flange Bolts @ W-20	AUG	-	-	-	-	-	-	-	-	-	-	-	-
1	Main Steam A			OWN	-	-	-	-	-	-	-	-	-	-	-	-
				PRE	-	-	-	-	-	-	-	-	-	-	-	-
B-G-2	100571	ISI/VT/ISI-VT-1.0	ISI-13142-33-A	ISI	-	-	-	-	-	-	-	-	s	-	-	-
B7.50	B- 6		Flange Bolts @ W-22	AUG	-	-	-	-	-	-	-	-	-	-	-	-
1	Main Steam A			OWN	-	-	-	-	-	-	-	-	-	-	-	-
				PRE	-	-	-	-	-	-	-	-	-	-	-	-
B-G-2	100572	ISI/VT/ISI-VT-1.0	ISI-13142-33-A	ISI	-	c	-	-	-	-	-	-	b	-	-	-
B7.70	B- 7		Valve Bolts	AUG	-	-	-	-	-	-	-	-	-	-	-	-
1	Main Steam A			OWN	-	-	-	-	-	-	-	-	-	-	-	-
				PRE	-	-	-	-	-	-	-	-	-	-	-	-
B-G-2	100573	ISI/VT/ISI-VT-1.0	ISI-13142-33-A	ISI	c	-	-	-	-	-	-	-	b	-	-	-
B7.70	B- 8		Valve Bolts	AUG	-	-	-	-	-	-	-	-	-	-	-	-
1	Main Steam A			OWN	-	-	-	-	-	-	-	-	-	-	-	-
				PRE	-	-	-	-	-	-	-	-	-	-	-	-

MONTICELLO Nuclear Generating Plant
3rd Interval ISI Plan Rev. 3 June 1, 1992 to May 31, 2002

Category, ItemNO, Class	Summary / CompID / System	Scope / Method / Procedure	Iso No. Comp. Desc. Code Case /Note		Period 1				Period 2				Period 3			
					1	2	3	4	1	2	3	4	1	2	3	4
B-G-2	100574	ISI/VT/ISI-VT-1.0	ISI-13142-33-A	ISI	c	B	-	-	-	-	-	-	b	-	-	-
B7.70	B- 9		Valve Bolts	AUG	-	-	-	-	-	-	-	-	-	-	-	-
1	Main Steam A			OWN	-	-	-	-	-	-	-	-	-	-	-	-
				PRE	-	-	-	-	-	-	-	-	-	-	-	-
B-G-2	100575	ISI/VT/ISI-VT-1.0	ISI-13142-33-A	ISI	c	B	-	-	-	-	-	-	b	-	-	-
B7.70	B-10		Valve Bolts	AUG	-	-	-	-	-	-	-	-	-	-	-	-
1	Main Steam A			OWN	-	-	-	-	-	-	-	-	-	-	-	-
				PRE	-	-	-	-	-	-	-	-	-	-	-	-
B-K-1	100576	ISI/MT/ISI-MT-1	ISI-13142-33-A	ISI	c	-	-	-	-	-	-	-	-	-	-	-
B10.10	H- 1	ISI/VT/ISI-VT-2.0	Double Spring/4 Lugs	AUG	-	-	-	-	-	-	-	-	-	-	-	-
1	Main Steam A			OWN	-	-	-	-	-	-	-	-	-	-	-	-
				PRE	-	-	-	-	-	-	-	-	-	-	-	-
F-B	100578	ISI/VT/ISI-VT-2.0	ISI-13142-33-A	ISI	c	B	-	-	-	B	-	-	b	-	-	-
F-A,B,C	H- 2		Snubber / Clamp	AUG	-	-	-	-	-	-	-	-	-	-	-	-
1	Main Steam A			OWN	-	-	-	-	-	-	-	-	-	-	-	-
				PRE	-	-	-	-	-	-	-	-	-	-	-	-
F-B	100579	ISI/VT/ISI-VT-2.0	ISI-13142-33-A	ISI	c	B	-	-	-	-	-	-	-	-	-	-
F-A,B,C	H- 3		Snubber / Clamp	AUG	-	-	-	-	-	-	-	-	-	-	-	-
1	Main Steam A			OWN	-	-	-	-	-	-	-	-	-	-	-	-
				PRE	-	-	-	-	-	-	-	-	-	-	-	-
F-C	100580	ISI/VT/ISI-VT-2.0	ISI-13142-33-A	ISI	c	-	-	-	-	-	-	-	-	-	-	-
F-A,B,C	H- 4		Varible / Spring	AUG	-	-	-	-	-	-	-	-	-	-	-	-
1	Main Steam A			OWN	-	-	-	-	-	-	-	-	-	-	-	-
				PRE	-	-	-	-	-	-	-	-	-	-	-	-
F-C	100581	ISI/VT/ISI-VT-2.0	ISI-13142-33-A	ISI	-	-	-	-	-	-	-	-	s	-	-	-
F-A,B,C	H- 5		Spring / Clamp	AUG	-	-	-	-	-	-	-	-	-	-	-	-
1	Main Steam A			OWN	-	-	-	-	-	-	-	-	-	-	-	-
				PRE	-	-	-	-	-	-	-	-	-	-	-	-
F-B	100582	ISI/VT/ISI-VT-2.0	ISI-13142-33-A	ISI	-	c	-	-	-	-	-	-	b	-	-	-
F-A,B,C	H- 6		Snubber / Clamp	AUG	-	-	-	-	-	-	-	-	-	-	-	-
1	Main Steam A			OWN	-	-	-	-	-	-	-	-	-	-	-	-
				PRE	-	-	-	-	-	-	-	-	-	-	-	-
F-B	100583	ISI/VT/ISI-VT-2.0	ISI-13142-33-A	ISI	c	-	-	-	-	-	-	-	b	-	-	-
F-A,B,C	H- 7		Snubber / Clamp	AUG	-	-	-	-	-	-	-	-	-	-	-	-
1	Main Steam A			OWN	-	-	-	-	-	-	-	-	-	-	-	-
				PRE	-	-	-	-	-	-	-	-	-	-	-	-
B-K-1	100584	ISI/VT/ISI-VT-2.0	ISI-13142-33-A	ISI	-	-	-	-	-	-	-	-	s	-	-	-
B10.10	H- 8		Double Spring/4 Lugs	AUG	-	-	-	-	-	-	-	-	-	-	-	-
1	Main Steam A			OWN	-	-	-	-	-	-	-	-	-	-	-	-
				PRE	-	-	-	-	-	-	-	-	-	-	-	-

MONTICELLO Nuclear Generating Plant
3rd Interval ISI Plan Rev. 3 June 1, 1992 to May 31, 2002

Category, ItemNO, Class	Summary / CompID / System	Scope / Method / Procedure	Iso No. Comp. Desc. Code Case /Note		Period 1				Period 2				Period 3			
					1	2	3	4	1	2	3	4	1	2	3	4
B-M-2	100585		ISI-13142-33-A	ISI	-	-	-	-	-	-	-	-	-	-	-	-
B12.50	V- 1		Valve Int Surfaces	AUG	-	-	-	-	-	-	-	-	-	-	-	-
1	Main Steam A		NOTE: FF, RELIEF 4	OWN	-	-	-	-	-	-	-	-	-	-	-	-
				PRE	-	-	-	-	-	-	-	-	-	-	-	-
B-M-2	100586		ISI-13142-33-A	ISI	-	-	-	-	-	-	-	-	-	-	-	-
B12.50	V- 2		Valve Int Surfaces	AUG	-	-	-	-	-	-	-	-	-	-	-	-
1	Main Steam A		NOTE: FF, RELIEF 4	OWN	-	-	-	-	-	-	-	-	-	-	-	-
				PRE	-	-	-	-	-	-	-	-	-	-	-	-
B-M-2	100587	ISI/VT/ISI-VT-3.0	ISI-13142-33-A	ISI	c	B	-	-	-	-	-	-	-	-	-	-
B12.50	V- 3		Valve Int Surfaces	AUG	-	-	-	-	-	-	-	-	-	-	-	-
1	Main Steam A		NOTE: FF, RELIEF 4	OWN	-	-	-	-	-	-	-	-	-	-	-	-
				PRE	-	-	-	-	-	-	-	-	-	-	-	-
B-M-2	100588	ISI/VT/ISI-VT-3.0	ISI-13142-33-A	ISI	c	-	-	-	-	-	-	-	-	-	-	-
B12.50	V- 4		Valve Int Surfaces	AUG	-	-	-	-	-	-	-	-	-	-	-	-
1	Main Steam A		NOTE: FF, RELIEF 4	OWN	-	-	-	-	-	-	-	-	-	-	-	-
				PRE	-	-	-	-	-	-	-	-	-	-	-	-
B-J	100589	ISI/MT/ISI-MT-1	ISI-13142-33-A	ISI	c	-	-	-	-	-	-	-	-	-	-	-
B9.10	W- 1 LS D	ISI/UT/ISI-UT-1	Nozzle-to-Safe End	AUG	-	-	-	-	-	-	-	-	-	-	-	-
1	Main Steam A			OWN	-	-	-	-	-	-	-	-	-	-	-	-
				PRE	-	-	-	-	-	-	-	-	-	-	-	-
B-J	100590	ISI/MT/ISI-MT-1	ISI-13142-33-A	ISI	c	-	-	-	-	-	-	-	-	-	-	-
B9.10	W- 2 LS U	ISI/UT/ISI-UT-1	Safe End-to-Elbow	AUG	-	-	-	-	-	-	-	-	-	-	-	-
1	Main Steam A			OWN	-	-	-	-	-	-	-	-	-	-	-	-
				PRE	-	-	-	-	-	-	-	-	-	-	-	-
B-J	100591		ISI-13142-33-A	ISI	-	-	-	-	-	-	-	-	-	-	-	-
B9.11	W- 3		Elbow-to-Pipe	AUG	-	-	-	-	-	-	-	-	-	-	-	-
1	Main Steam A			OWN	-	-	-	-	-	-	-	-	-	-	-	-
				PRE	-	-	-	-	-	-	-	-	-	-	-	-
B-J	100592		ISI-13142-33-A	ISI	-	-	-	-	-	-	-	-	-	-	-	-
B9.11	W- 4		Pipe-to-Elbow	AUG	-	-	-	-	-	-	-	-	-	-	-	-
1	Main Steam A			OWN	-	-	-	-	-	-	-	-	-	-	-	-
				PRE	-	-	-	-	-	-	-	-	-	-	-	-
B-J	100593	ISI/MT/ISI-MT-1	ISI-13142-33-A	ISI	c	-	-	-	-	-	-	-	-	-	-	-
B9.11	W- 5	ISI/UT/ISI-UT-1	Elbow-to-Pipe	AUG	-	-	-	-	-	-	-	-	-	-	-	-
1	Main Steam A			OWN	-	-	-	-	-	-	-	-	-	-	-	-
				PRE	-	-	-	-	-	-	-	-	-	-	-	-
B-J	100594		ISI-13142-33-A	ISI	-	-	-	-	-	-	-	-	-	-	-	-
B9.11	W- 6		Pipe-to-Elbow	AUG	-	-	-	-	-	-	-	-	-	-	-	-
1	Main Steam A			OWN	-	-	-	-	-	-	-	-	-	-	-	-
				PRE	-	-	-	-	-	-	-	-	-	-	-	-

MONTICELLO Nuclear Generating Plant
3rd Interval ISI Plan Rev. 3 June 1, 1992 to May 31, 2002

Category, ItemNO, Class	Summary / CompID / System	Scope / Method / Procedure	Iso No. Comp. Desc. Code Case /Note		Period 1				Period 2				Period 3			
					1	2	3	4	1	2	3	4	1	2	3	4
B-J	100595		ISI-13142-33-A	ISI	-	-	-	-	-	-	-	-	-	-	-	-
B9.11	W- 7		Elbow-to-Pipe	AUG	-	-	-	-	-	-	-	-	-	-	-	-
1	Main Steam A			OWN	-	-	-	-	-	-	-	-	-	-	-	-
				PRE	-	-	-	-	-	-	-	-	-	-	-	-
B-J	100596		ISI-13142-33-A	ISI	-	-	-	-	-	-	-	-	-	-	-	-
B9.11	W- 8		Pipe-to-Elbow	AUG	-	-	-	-	-	-	-	-	-	-	-	-
1	Main Steam A			OWN	-	-	-	-	-	-	-	-	-	-	-	-
				PRE	-	-	-	-	-	-	-	-	-	-	-	-
B-J	100597		ISI-13142-33-A	ISI	-	-	-	-	-	-	-	-	-	-	-	-
B9.11	W- 9		Elbow-to-Elbow	AUG	-	-	-	-	-	-	-	-	-	-	-	-
1	Main Steam A			OWN	-	-	-	-	-	-	-	-	-	-	-	-
				PRE	-	-	-	-	-	-	-	-	-	-	-	-
B-J	100598	ISI/MT/ISI-MT-1	ISI-13142-33-A	ISI	-	c	-	-	-	-	-	-	-	-	-	-
B9.11	W-10	ISI/UT/ISI-UT-1	Elbow-to-Pipe	AUG	-	-	-	-	-	-	-	-	-	-	-	-
1	Main Steam A			OWN	-	-	-	-	-	-	-	-	-	-	-	-
				PRE	-	-	-	-	-	-	-	-	-	-	-	-
B-J	100599		ISI-13142-33-A	ISI	-	-	-	-	-	-	-	-	-	-	-	-
B9.31	W-11		Pipe-to-Sweepolet	AUG	-	-	-	-	-	-	-	-	-	-	-	-
1	Main Steam A			OWN	-	-	-	-	-	-	-	-	-	-	-	-
				PRE	-	-	-	-	-	-	-	-	-	-	-	-
B-J	100600		ISI-13142-33-A	ISI	-	-	-	-	-	-	-	-	-	-	-	-
B9.11	W-12		Sweepolet-to-Flange	AUG	-	-	-	-	-	-	-	-	-	-	-	-
1	Main Steam A			OWN	-	-	-	-	-	-	-	-	-	-	-	-
				PRE	-	-	-	-	-	-	-	-	-	-	-	-
B-J	100601	ISI/UT/ISI-UT-1	ISI-13142-33-A	ISI	-	c	-	-	-	-	-	-	-	-	-	-
B9.31	W-13	ISI/MT/ISI-MT-1	Pipe-to-Sweepolet	AUG	-	-	-	-	-	-	-	-	-	-	-	-
1	Main Steam A			OWN	-	-	-	-	-	-	-	-	-	-	-	-
				PRE	-	-	-	-	-	-	-	-	-	-	-	-
B-J	100602		ISI-13142-33-A	ISI	-	-	-	-	-	-	-	-	-	-	-	-
B9.11	W-14		Sweepolet to Flange	AUG	-	-	-	-	-	-	-	-	-	-	-	-
1	Main Steam A			OWN	-	-	-	-	-	-	-	-	-	-	-	-
				PRE	-	-	-	-	-	-	-	-	-	-	-	-
B-J	100603		ISI-13142-33-A	ISI	-	-	-	-	-	-	-	-	-	-	-	-
B9.31	W-15		Pipe-to-Sweepolet	AUG	-	-	-	-	-	-	-	-	-	-	-	-
1	Main Steam A			OWN	-	-	-	-	-	-	-	-	-	-	-	-
				PRE	-	-	-	-	-	-	-	-	-	-	-	-
B-J	100604		ISI-13142-33-A	ISI	-	-	-	-	-	-	-	-	-	-	-	-
B9.11	W-16		Sweepolet to Flange	AUG	-	-	-	-	-	-	-	-	-	-	-	-
1	Main Steam A			OWN	-	-	-	-	-	-	-	-	-	-	-	-
				PRE	-	-	-	-	-	-	-	-	-	-	-	-

MONTICELLO Nuclear Generating Plant
3rd Interval ISI Plan Rev. 3 June 1, 1992 to May 31, 2002

Category, ItemNO, Class	Summary / CompID / System	Scope / Method / Procedure	Iso No. Comp. Desc. Code Case /Note		Period 1				Period 2				Period 3			
					1	2	3	4	1	2	3	4	1	2	3	4
B-J	100605	ISI/UT/ISI-UT-1	ISI-13142-33-A	ISI	-	-	-	-	-	-	-	-	s	-	-	-
B9.31	W-17	ISI/MT/ISI-MT-1	Pipe-to-Sweepolet	AUG	-	-	-	-	-	-	-	-	-	-	-	-
1	Main Steam A			OWN	-	-	-	-	-	-	-	-	-	-	-	-
				PRE	-	-	-	-	-	-	-	-	-	-	-	-
B-J	100606		ISI-13142-33-A	ISI	-	-	-	-	-	-	-	-	-	-	-	-
B9.11	W-18		Sweepolet to Flange	AUG	-	-	-	-	-	-	-	-	-	-	-	-
1	Main Steam A			OWN	-	-	-	-	-	-	-	-	-	-	-	-
				PRE	-	-	-	-	-	-	-	-	-	-	-	-
B-J	100607		ISI-13142-33-A	ISI	-	-	-	-	-	-	-	-	-	-	-	-
B9.31	W-19		Pipe-to-Sweepolet	AUG	-	-	-	-	-	-	-	-	-	-	-	-
1	Main Steam A			OWN	-	-	-	-	-	-	-	-	-	-	-	-
				PRE	-	-	-	-	-	-	-	-	-	-	-	-
B-J	100608		ISI-13142-33-A	ISI	-	-	-	-	-	-	-	-	-	-	-	-
B9.11	W-20		Sweepolet to Flange	AUG	-	-	-	-	-	-	-	-	-	-	-	-
1	Main Steam A			OWN	-	-	-	-	-	-	-	-	-	-	-	-
				PRE	-	-	-	-	-	-	-	-	-	-	-	-
B-J	100609		ISI-13142-33-A	ISI	-	-	-	-	-	-	-	-	-	-	-	-
B9.31	W-21		Pipe-to-Sweepolet	AUG	-	-	-	-	-	-	-	-	-	-	-	-
1	Main Steam A			OWN	-	-	-	-	-	-	-	-	-	-	-	-
				PRE	-	-	-	-	-	-	-	-	-	-	-	-
B-J	100610		ISI-13142-33-A	ISI	-	-	-	-	-	-	-	-	-	-	-	-
B9.11	W-22		Sweepolet to Flange	AUG	-	-	-	-	-	-	-	-	-	-	-	-
1	Main Steam A			OWN	-	-	-	-	-	-	-	-	-	-	-	-
				PRE	-	-	-	-	-	-	-	-	-	-	-	-
B-J	100611		ISI-13142-33-A	ISI	-	-	-	-	-	-	-	-	-	-	-	-
B9.11	W-23		Pipe-to-Elbow	AUG	-	-	-	-	-	-	-	-	-	-	-	-
1	Main Steam A			OWN	-	-	-	-	-	-	-	-	-	-	-	-
				PRE	-	-	-	-	-	-	-	-	-	-	-	-
B-J	100612	ISI/MT/ISI-MT-1	ISI-13142-33-A	ISI	-	-	-	-	-	-	-	-	s	-	-	-
B9.11	W-24	ISI/UT/ISI-UT-1	Elbow-to-Pipe	AUG	-	-	-	-	-	-	-	-	-	-	-	-
1	Main Steam A			OWN	-	-	-	-	-	-	-	-	-	-	-	-
				PRE	-	-	-	-	-	-	-	-	-	-	-	-
B-J	100613	ISI/MT/ISI-MT-1	ISI-13142-33-A	ISI	-	-	-	-	-	-	-	-	s	-	-	-
B9.11	W-25	ISI/UT/ISI-UT-1	Pipe-to-Elbow	AUG	-	-	-	-	-	-	-	-	-	-	-	-
1	Main Steam A			OWN	-	-	-	-	-	-	-	-	-	-	-	-
				PRE	-	-	-	-	-	-	-	-	-	-	-	-
B-J	100614		ISI-13142-33-A	ISI	-	-	-	-	-	-	-	-	-	-	-	-
B9.11	W-26		Elbow-to-Valve	AUG	-	-	-	-	-	-	-	-	-	-	-	-
1	Main Steam A			OWN	-	-	-	-	-	-	-	-	-	-	-	-
				PRE	-	-	-	-	-	-	-	-	-	-	-	-

MONTICELLO Nuclear Generating Plant
3rd Interval ISI Plan Rev. 3 June 1, 1992 to May 31, 2002

Category, ItemNO, Class	Summary / CompID / System	Scope / Method / Procedure	Iso No. Comp. Desc. Code Case /Note		Period 1				Period 2				Period 3			
					1	2	3	4	1	2	3	4	1	2	3	4
B-J	100615		ISI-13142-33-A	ISI	-	-	-	-	-	-	-	-	-	-	-	-
B9.11	W-27		Valve-to-Pipe	AUG	-	-	-	-	-	-	-	-	-	-	-	-
1	Main Steam A			OWN	-	-	-	-	-	-	-	-	-	-	-	-
				PRE	-	-	-	-	-	-	-	-	-	-	-	-
B-J	100616		ISI-13142-33-A	ISI	-	-	-	-	-	-	-	-	-	-	-	-
B9.11	W-28		Pipe-to-Pipe	AUG	-	-	-	-	-	-	-	-	-	-	-	-
1	Main Steam A		NOTE: DD	OWN	-	-	-	-	-	-	-	-	-	-	-	-
				PRE	-	-	-	-	-	-	-	-	-	-	-	-
B-J	100617	ISI/MT/ISI-MT-1	ISI-13142-33-A	ISI	-	-	-	-	-	-	-	-	s	-	-	-
B9.11	W-29	ISI/UT/ISI-UT-1	Pipe-to-Pipe	AUG	-	-	-	-	-	-	-	-	-	-	-	-
1	Main Steam A			OWN	-	-	-	-	-	-	-	-	-	-	-	-
				PRE	-	-	-	-	-	-	-	-	-	-	-	-
B-J	100618	ISI/MT/ISI-MT-1	ISI-13142-33-A	ISI	-	-	-	-	c	-	-	-	-	-	-	-
B9.11	W-30	ISI/UT/ISI-UT-1	Pipe-to-Pipe	AUG	-	-	-	-	-	-	-	-	-	-	-	-
1	Main Steam A		NOTE: MM	OWN	-	-	-	-	-	-	-	-	-	-	-	-
				PRE	-	-	-	-	-	-	-	-	-	-	-	-
B-J	100619	ISI/MT/ISI-MT-1	ISI-13142-33-A	ISI	-	c	-	-	-	-	-	-	-	-	-	-
B9.11	W-31	ISI/UT/ISI-UT-1	Pipe-to-Pipe	AUG	-	-	-	-	-	-	-	-	-	-	-	-
1	Main Steam A		NOTE: MM	OWN	-	-	-	-	-	-	-	-	-	-	-	-
				PRE	-	-	-	-	-	-	-	-	-	-	-	-
B-J	100620	ISI/MT/ISI-MT-1	ISI-13142-33-A	ISI	c	-	-	-	-	-	-	-	-	-	-	-
B9.11	W-32	ISI/UT/ISI-UT-1	Pipe-to-Valve	AUG	-	-	-	-	-	-	-	-	-	-	-	-
1	Main Steam A		NOTE: MM	OWN	-	-	-	-	-	-	-	-	-	-	-	-
				PRE	-	-	-	-	-	-	-	-	-	-	-	-
B-G-2	100621	ISI/VT/ISI-VT-1.0	ISI-13142-34-A	ISI	c	-	-	-	-	-	-	-	-	b	-	-
B7.50	B- 1		Flange Bolts @ W-13	AUG	-	-	-	-	-	-	-	-	-	-	-	-
1	Main Steam B			OWN	-	-	-	-	-	-	-	-	-	-	-	-
				PRE	-	-	-	-	-	-	-	-	-	-	-	-
B-G-2	100622	ISI/VT/ISI-VT-1.0	ISI-13142-34-A	ISI	-	c	-	-	-	-	-	-	-	-	-	-
B7.50	B- 2		Flange Bolts @ W-15	AUG	-	-	-	-	-	-	-	-	-	-	-	-
1	Main Steam B			OWN	-	-	-	-	-	-	-	-	-	-	-	-
				PRE	-	-	-	-	-	-	-	-	-	-	-	-
B-G-2	100623	ISI/VT/ISI-VT-1.0	ISI-13142-34-A	ISI	c	-	-	-	-	-	-	-	-	b	-	-
B7.50	B- 3		Flange Bolts @ W-16	AUG	-	-	-	-	-	-	-	-	-	-	-	-
1	Main Steam B			OWN	-	-	-	-	-	-	-	-	-	-	-	-
				PRE	-	-	-	-	-	-	-	-	-	-	-	-
B-G-2	100624	ISI/UT/ISI-VT-1.0	ISI-13142-34-A	ISI	-	c	-	-	-	-	-	-	-	-	-	-
B7.70	B- 4		Valve Bolts @ W-26	AUG	-	-	-	-	-	-	-	-	-	-	-	-
1	Main Steam B			OWN	-	-	-	-	-	-	-	-	-	-	-	-
				PRE	-	-	-	-	-	-	-	-	-	-	-	-

MONTICELLO Nuclear Generating Plant
3rd Interval ISI Plan Rev. 3 June 1, 1992 to May 31, 2002

Category, ItemNO, Class	Summary / CompID / System	Scope / Method / Procedure	Iso No. Comp. Desc. Code Case /Note		Period 1				Period 2				Period 3			
					1	2	3	4	1	2	3	4	1	2	3	4
B-G-2	100625	ISI/VT/ISI-VT-1.0	ISI-13142-34-A	ISI	c	B	-	-	-	-	-	-	-	-	-	-
B7.70	B- 5		Valve Bolts	AUG	-	-	-	-	-	-	-	-	-	-	-	-
1	Main Steam B			OWN	-	-	-	-	-	-	-	-	-	-	-	-
				PRE	-	-	-	-	-	-	-	-	-	-	-	-
B-G-2	100626	ISI/VT/ISI-VT-1.0	ISI-13142-34-A	ISI	c	B	-	-	-	-	-	-	-	-	-	-
B7.70	B- 6		Valve Bolts	AUG	-	-	-	-	-	-	-	-	-	-	-	-
1	Main Steam B			OWN	-	-	-	-	-	-	-	-	-	-	-	-
				PRE	-	-	-	-	-	-	-	-	-	-	-	-
B-G-2	100629	ISI/VT/ISI-VT-1.0	ISI-13142-34-A	ISI	c	B	-	-	-	-	-	-	b	-	-	-
B7.70	B- 7		Valve Bolts	AUG	-	-	-	-	-	-	-	-	-	-	-	-
1	Main Steam B			OWN	-	-	-	-	-	-	-	-	-	-	-	-
				PRE	-	-	-	-	-	-	-	-	-	-	-	-
B-K-1	100630	ISI/MT/ISI-MT-1	ISI-13142-34-A	ISI	-	-	-	-	-	-	-	-	-	s	-	-
B10.10	H- 1	ISI/VT/ISI-VT-2.0	Double Spring/4 Lugs	AUG	-	-	-	-	-	-	-	-	-	-	-	-
1	Main Steam B			OWN	-	-	-	-	-	-	-	-	-	-	-	-
				PRE	-	-	-	-	-	-	-	-	-	-	-	-
F-B	100631	ISI/VT/ISI-VT-2.0	ISI-13142-34-A	ISI	-	c	-	-	-	B	-	-	b	-	-	-
F-A,B,C	H- 2		Snubber / Clamp	AUG	-	-	-	-	-	-	-	-	-	-	-	-
1	Main Steam B			OWN	-	-	-	-	-	-	-	-	-	-	-	-
				PRE	-	-	-	-	-	-	-	-	-	-	-	-
F-B	100632	ISI/VT/ISI-VT-2.0	ISI-13142-34-A	ISI	c	B	-	-	-	B	-	-	-	-	-	-
F-A,B,C	H- 3		Snubber / Clamp	AUG	-	-	-	-	-	-	-	-	-	-	-	-
1	Main Steam B			OWN	-	-	-	-	-	-	-	-	-	-	-	-
				PRE	-	-	-	-	-	-	-	-	-	-	-	-
F-C	100633	ISI/VT/ISI-VT-2.0	ISI-13142-34-A	ISI	-	-	-	-	-	c	-	-	-	-	-	-
F-A,B,C	H- 4		Spring / Clamp	AUG	-	-	-	-	-	-	-	-	-	-	-	-
1	Main Steam B			OWN	-	-	-	-	-	-	-	-	-	-	-	-
				PRE	-	-	-	-	-	-	-	-	-	-	-	-
B-K-1	100634	ISI/MT/ISI-MT-1	ISI-13142-34-A	ISI	-	-	-	-	-	-	-	-	-	s	-	-
B10.10	H- 5	ISI/VT/ISI-VT-2.0	Double Spring/4 Lugs	AUG	-	-	-	-	-	-	-	-	-	-	-	-
1	Main Steam B			OWN	-	-	-	-	-	-	-	-	-	-	-	-
				PRE	-	-	-	-	-	-	-	-	-	-	-	-
B-M-2	100635	ISI/VT/ISI-VT-3.0	ISI-13142-34-A	ISI	-	c	-	-	-	-	-	-	-	-	-	-
B12.50	V- 1		Valve Int Surfaces	AUG	-	-	-	-	-	-	-	-	-	-	-	-
1	Main Steam B		NOTE: FF, RELIEF 4	OWN	-	-	-	-	-	-	-	-	-	-	-	-
				PRE	-	-	-	-	-	-	-	-	-	-	-	-
B-M-2	100636	ISI/VT/ISI-VT-3.0	ISI-13142-34-A	ISI	-	c	-	-	-	-	-	-	-	-	-	-
B12.50	V- 2		Valve Int Surfaces	AUG	-	-	-	-	-	-	-	-	-	-	-	-
1	Main Steam B		NOTE: FF, RELIEF 4	OWN	-	-	-	-	-	-	-	-	-	-	-	-
				PRE	-	-	-	-	-	-	-	-	-	-	-	-

MONTICELLO Nuclear Generating Plant
3rd Interval ISI Plan Rev. 3 June 1, 1992 to May 31, 2002

Category, ItemNO, Class	Summary / CompID / System	Scope / Method / Procedure	Iso No. Comp. Desc. Code Case /Note		Period 1				Period 2				Period 3			
					1	2	3	4	1	2	3	4	1	2	3	4
B-M-2	100637	ISI/VT/ISI-VT-3.0	ISI-13142-34-A	ISI	-	c	-	-	-	-	-	-	-	-	-	-
B12.50	V- 3		Valve Int Surfaces	AUG	-	-	-	-	-	-	-	-	-	-	-	-
1	Main Steam B		NOTE: FF, RELIEF 4	OWN	-	-	-	-	-	-	-	-	-	-	-	-
				PRE	-	-	-	-	-	-	-	-	-	-	-	-
B-M-2	100638	ISI/VT/ISI-VT-3.0	ISI-13142-34-A	ISI	c	-	-	-	-	-	-	-	-	-	-	-
B12.50	V- 4		Valve Int Surfaces	AUG	-	-	-	-	-	-	-	-	-	-	-	-
1	Main Steam B		NOTE: FF, RELIEF 4	OWN	-	-	-	-	-	-	-	-	-	-	-	-
				PRE	-	-	-	-	-	-	-	-	-	-	-	-
B-J	100639	ISI/MT/ISI-MT-1	ISI-13142-34-A	ISI	-	-	-	-	-	-	-	-	s	-	-	-
B9.10	W- 1 LS D	ISI/UT/ISI-UT-1	Nozzle-to-Safe End	AUG	-	-	-	-	-	-	-	-	-	-	-	-
1	Main Steam B			OWN	-	-	-	-	-	-	-	-	-	-	-	-
				PRE	-	-	-	-	-	-	-	-	-	-	-	-
B-J	100640	ISI/MT/ISI-MT-1	ISI-13142-34-A	ISI	-	-	-	-	-	-	-	-	s	-	-	-
B9.10	W- 2 LS U	ISI/UT/ISI-UT-1	Safe End-to-Elbow	AUG	-	-	-	-	-	-	-	-	-	-	-	-
1	Main Steam B			OWN	-	-	-	-	-	-	-	-	-	-	-	-
				PRE	-	-	-	-	-	-	-	-	-	-	-	-
B-J	100641		ISI-13142-34-A	ISI	-	-	-	-	-	-	-	-	-	-	-	-
B9.11	W- 3		Elbow-to-Pipe	AUG	-	-	-	-	-	-	-	-	-	-	-	-
1	Main Steam B			OWN	-	-	-	-	-	-	-	-	-	-	-	-
				PRE	-	-	-	-	-	-	-	-	-	-	-	-
B-J	100642		ISI-13142-34-A	ISI	-	-	-	-	-	-	-	-	-	-	-	-
B9.11	W- 4		Pipe-to-Elbow	AUG	-	-	-	-	-	-	-	-	-	-	-	-
1	Main Steam B			OWN	-	-	-	-	-	-	-	-	-	-	-	-
				PRE	-	-	-	-	-	-	-	-	-	-	-	-
B-J	100643		ISI-13142-34-A	ISI	-	-	-	-	-	-	-	-	-	-	-	-
B9.11	W- 5		Elbow-to-Pipe	AUG	-	-	-	-	-	-	-	-	-	-	-	-
1	Main Steam B			OWN	-	-	-	-	-	-	-	-	-	-	-	-
				PRE	-	-	-	-	-	-	-	-	-	-	-	-
B-J	100644		ISI-13142-34-A	ISI	-	-	-	-	-	-	-	-	-	-	-	-
B9.11	W- 6		Pipe-to-Pipe	AUG	-	-	-	-	-	-	-	-	-	-	-	-
1	Main Steam B			OWN	-	-	-	-	-	-	-	-	-	-	-	-
				PRE	-	-	-	-	-	-	-	-	-	-	-	-
B-J	100645		ISI-13142-34-A	ISI	-	-	-	-	-	-	-	-	-	-	-	-
B9.11	W- 7		Pipe-to-Elbow	AUG	-	-	-	-	-	-	-	-	-	-	-	-
1	Main Steam B			OWN	-	-	-	-	-	-	-	-	-	-	-	-
				PRE	-	-	-	-	-	-	-	-	-	-	-	-
B-J	100646		ISI-13142-34-A	ISI	-	-	-	-	-	-	-	-	-	-	-	-
B9.11	W- 8		Elbow-to-Pipe	AUG	-	-	-	-	-	-	-	-	-	-	-	-
1	Main Steam B			OWN	-	-	-	-	-	-	-	-	-	-	-	-
				PRE	-	-	-	-	-	-	-	-	-	-	-	-

MONTICELLO Nuclear Generating Plant
3rd Interval ISI Plan Rev. 3 June 1, 1992 to May 31, 2002

Category, ItemNO, Class	Summary / CompID / System	Scope / Method / Procedure	Iso No. Comp. Desc. Code Case /Note		Period 1				Period 2				Period 3			
					1	2	3	4	1	2	3	4	1	2	3	4
B-J	100647		ISI-13142-34-A	ISI	-	-	-	-	-	-	-	-	-	-	-	-
B9.11	W- 9		Pipe-to-Elbow	AUG	-	-	-	-	-	-	-	-	-	-	-	-
1	Main Steam B			OWN	-	-	-	-	-	-	-	-	-	-	-	-
				PRE	-	-	-	-	-	-	-	-	-	-	-	-
B-J	100648	ISI/MT/ISI-MT-1	ISI-13142-34-A	ISI	-	c	-	-	-	-	-	-	-	-	-	-
B9.11	W-10	ISI/UT/ISI-UT-1	Elbow-to-Elbow	AUG	-	-	-	-	-	-	-	-	-	-	-	-
1	Main Steam B			OWN	-	-	-	-	-	-	-	-	-	-	-	-
				PRE	-	-	-	-	-	-	-	-	-	-	-	-
B-J	100649	ISI/MT/ISI-MT-1	ISI-13142-34-A	ISI	-	c	-	-	-	-	-	-	-	-	-	-
B9.11	W-11	ISI/UT/ISI-UT-1	Elbow-to-Pipe	AUG	-	-	-	-	-	-	-	-	-	-	-	-
1	Main Steam B			OWN	-	-	-	-	-	-	-	-	-	-	-	-
				PRE	-	-	-	-	-	-	-	-	-	-	-	-
B-J	100650		ISI-13142-34-A	ISI	-	-	-	-	-	-	-	-	-	-	-	-
B9.31	W-12		Pipe-to-Sweepolet	AUG	-	-	-	-	-	-	-	-	-	-	-	-
1	Main Steam B			OWN	-	-	-	-	-	-	-	-	-	-	-	-
				PRE	-	-	-	-	-	-	-	-	-	-	-	-
B-J	100651		ISI-13142-34-A	ISI	-	-	-	-	-	-	-	-	-	-	-	-
B9.11	W-13		Sweepolet to Flange	AUG	-	-	-	-	-	-	-	-	-	-	-	-
1	Main Steam B			OWN	-	-	-	-	-	-	-	-	-	-	-	-
				PRE	-	-	-	-	-	-	-	-	-	-	-	-
B-J	100652		ISI-13142-34-A	ISI	-	-	-	-	-	-	-	-	-	-	-	-
B9.31	W-14		Pipe-to-Sweepolet	AUG	-	-	-	-	-	-	-	-	-	-	-	-
1	Main Steam B			OWN	-	-	-	-	-	-	-	-	-	-	-	-
				PRE	-	-	-	-	-	-	-	-	-	-	-	-
B-J	100653		ISI-13142-34-A	ISI	-	-	-	-	-	-	-	-	-	-	-	-
B9.11	W-15		Sweepolet to Flange	AUG	-	-	-	-	-	-	-	-	-	-	-	-
1	Main Steam B			OWN	-	-	-	-	-	-	-	-	-	-	-	-
				PRE	-	-	-	-	-	-	-	-	-	-	-	-
B-J	100654		ISI-13142-34-A	ISI	-	-	-	-	-	-	-	-	-	-	-	-
B9.11	W-16		Sweepolet to Flange	AUG	-	-	-	-	-	-	-	-	-	-	-	-
1	Main Steam B			OWN	-	-	-	-	-	-	-	-	-	-	-	-
				PRE	-	-	-	-	-	-	-	-	-	-	-	-
B-J	100655		ISI-13142-34-A	ISI	-	-	-	-	-	-	-	-	-	-	-	-
B9.31	W-17		Pipe-to-Sweepolet	AUG	-	-	-	-	-	-	-	-	-	-	-	-
1	Main Steam B			OWN	-	-	-	-	-	-	-	-	-	-	-	-
				PRE	-	-	-	-	-	-	-	-	-	-	-	-
B-J	100656	ISI/MT/ISI-MT-1	ISI-13142-34-A	ISI	-	c	-	-	-	-	-	-	-	-	-	-
B9.31	W-18	ISI/UT/ISI-UT-1	Pipe-to-Sweepolet	AUG	-	-	-	-	-	-	-	-	-	-	-	-
1	Main Steam B			OWN	-	-	-	-	-	-	-	-	-	-	-	-
				PRE	-	-	-	-	-	-	-	-	-	-	-	-

MONTICELLO Nuclear Generating Plant
3rd Interval ISI Plan Rev. 3 June 1, 1992 to May 31, 2002

Category, ItemNO, Class	Summary / CompID / System	Scope / Method / Procedure	Iso No. Comp. Desc. Code Case /Note		Period 1				Period 2				Period 3			
					1	2	3	4	1	2	3	4	1	2	3	4
B-J	100657		ISI-13142-34-A	ISI	-	-	-	-	-	-	-	-	-	-	-	-
B9.11	W-19		Pipe-to-Elbow	AUG	-	-	-	-	-	-	-	-	-	-	-	-
1	Main Steam B			OWN	-	-	-	-	-	-	-	-	-	-	-	-
				PRE	-	-	-	-	-	-	-	-	-	-	-	-
B-J	100658	ISI/MT/ISI-MT-1	ISI-13142-34-A	ISI	-	-	-	-	-	-	-	-	s	-	-	-
B9.32	W-20		Elbow-to-Boss	AUG	-	-	-	-	-	-	-	-	-	-	-	-
1	Main Steam B			OWN	-	-	-	-	-	-	-	-	-	-	-	-
				PRE	-	-	-	-	-	-	-	-	-	-	-	-
B-J	100659	ISI/MT/ISI-MT-1	ISI-13142-34-A	ISI	-	-	-	-	-	-	-	-	s	-	-	-
B9.11	W-21	ISI/UT/ISI-UT-1	Elbow-to-Pipe	AUG	-	-	-	-	-	-	-	-	-	-	-	-
1	Main Steam B			OWN	-	-	-	-	-	-	-	-	-	-	-	-
				PRE	-	-	-	-	-	-	-	-	-	-	-	-
B-J	100660	ISI/MT/ISI-MT-1	ISI-13142-34-A	ISI	-	-	-	-	-	-	-	-	s	-	-	-
B9.11	W-22	ISI/UT/ISI-UT-1	Pipe-to-Elbow	AUG	-	-	-	-	-	-	-	-	-	-	-	-
1	Main Steam B			OWN	-	-	-	-	-	-	-	-	-	-	-	-
				PRE	-	-	-	-	-	-	-	-	-	-	-	-
B-J	100661		ISI-13142-34-A	ISI	-	-	-	-	-	-	-	-	-	-	-	-
B9.11	W-23		Elbow-to-Pipe	AUG	-	-	-	-	-	-	-	-	-	-	-	-
1	Main Steam B			OWN	-	-	-	-	-	-	-	-	-	-	-	-
				PRE	-	-	-	-	-	-	-	-	-	-	-	-
B-J	100662		ISI-13142-34-A	ISI	-	-	-	-	-	-	-	-	-	-	-	-
B9.11	W-24		Pipe-to-Pipe	AUG	-	-	-	-	-	-	-	-	-	-	-	-
1	Main Steam B			OWN	-	-	-	-	-	-	-	-	-	-	-	-
				PRE	-	-	-	-	-	-	-	-	-	-	-	-
B-J	100663		ISI-13142-34-A	ISI	-	-	-	-	-	-	-	-	-	-	-	-
B9.11	W-25		Pipe-to-Elbow	AUG	-	-	-	-	-	-	-	-	-	-	-	-
1	Main Steam B			OWN	-	-	-	-	-	-	-	-	-	-	-	-
				PRE	-	-	-	-	-	-	-	-	-	-	-	-
B-J	100664		ISI-13142-34-A	ISI	-	-	-	-	-	-	-	-	-	-	-	-
B9.11	W-26		Elbow-to-Valve	AUG	-	-	-	-	-	-	-	-	-	-	-	-
1	Main Steam B			OWN	-	-	-	-	-	-	-	-	-	-	-	-
				PRE	-	-	-	-	-	-	-	-	-	-	-	-
B-J	100665		ISI-13142-34-A	ISI	-	-	-	-	-	-	-	-	-	-	-	-
B9.11	W-27		Valve-to-Pipe	AUG	-	-	-	-	-	-	-	-	-	-	-	-
1	Main Steam B			OWN	-	-	-	-	-	-	-	-	-	-	-	-
				PRE	-	-	-	-	-	-	-	-	-	-	-	-
B-J	100666		ISI-13142-34-A	ISI	-	-	-	-	-	-	-	-	-	-	-	-
B9.11	W-28		Pipe-to-Pipe	AUG	-	-	-	-	-	-	-	-	-	-	-	-
1	Main Steam B		NOTE:DD	OWN	-	-	-	-	-	-	-	-	-	-	-	-
				PRE	-	-	-	-	-	-	-	-	-	-	-	-

MONTICELLO Nuclear Generating Plant
3rd Interval ISI Plan Rev. 3 June 1, 1992 to May 31, 2002

Category, ItemNO, Class	Summary / CompID / System	Scope / Method / Procedure	Iso No. Comp. Desc. Code Case /Note		Period 1				Period 2				Period 3			
					1	2	3	4	1	2	3	4	1	2	3	4
B-J	100667	ISI/MT/ISI-MT-1	ISI-13142-34-A	ISI	-	-	-	-	-	-	-	-	s	-	-	-
B9.11	W-29	ISI/UT/ISI-UT-1	Pipe-to-Pipe	AUG	-	-	-	-	-	-	-	-	-	-	-	-
1	Main Steam B			OWN	-	-	-	-	-	-	-	-	-	-	-	-
				PRE	-	-	-	-	-	-	-	-	-	-	-	-
B-J	100668	ISI/MT/ISI-MT-1	ISI-13142-34-A	ISI	-	-	-	-	c	-	-	-	-	-	-	-
B9.11	W-30	ISI/UT/ISI-UT-1	Pipe-to-Pipe	AUG	-	-	-	-	-	-	-	-	-	-	-	-
1	Main Steam B		NOTE:MM	OWN	-	-	-	-	-	-	-	-	-	-	-	-
				PRE	-	-	-	-	-	-	-	-	-	-	-	-
B-J	100669	ISI/UT/ISI-UT-1	ISI-13142-34-A	ISI	-	-	-	-	c	-	-	-	-	-	-	-
B9.11	W-31	ISI/MT/ISI-MT-1	Pipe-to-Pipe	AUG	-	-	-	-	-	-	-	-	-	-	-	-
1	Main Steam B		NOTE:MM	OWN	-	-	-	-	-	-	-	-	-	-	-	-
				PRE	-	-	-	-	-	-	-	-	-	-	-	-
B-J	100670	ISI/UT/ISI-UT-1	ISI-13142-34-A	ISI	-	c	-	-	-	-	-	-	-	-	-	-
B9.11	W-32	ISI/MT/ISI-MT-1	Pipe-to-Pipe	AUG	-	-	-	-	-	-	-	-	-	-	-	-
1	Main Steam B		NOTE:MM	OWN	-	-	-	-	-	-	-	-	-	-	-	-
				PRE	-	-	-	-	-	-	-	-	-	-	-	-
B-J	100671	ISI/MT/ISI-MT-1	ISI-13142-34-A	ISI	c	-	-	-	-	-	-	-	-	-	-	-
B9.11	W-33	ISI/UT/ISI-UT-1	Pipe-to-Valve	AUG	-	-	-	-	-	-	-	-	-	-	-	-
1	Main Steam B		NOTE:MM	OWN	-	-	-	-	-	-	-	-	-	-	-	-
				PRE	-	-	-	-	-	-	-	-	-	-	-	-
B-G-2	100672	ISI/VT/ISI-UT-1	ISI-13142-35-A	ISI	-	-	-	-	-	-	-	-	-	s	-	-
B7.70	B- 1		Valve Bolts	AUG	-	-	-	-	-	-	-	-	-	-	-	-
1	Main Steam C			OWN	-	-	-	-	-	-	-	-	-	-	-	-
				PRE	-	-	-	-	-	-	-	-	-	-	-	-
B-G-2	100673	ISI/VT/ISI-VT-1.0	ISI-13142-35-A	ISI	c	-	-	-	-	-	-	-	-	-	-	-
B7.70	B- 2		Valve Bolts	AUG	-	-	-	-	-	-	-	-	-	-	-	-
1	Main Steam C			OWN	-	-	-	-	-	-	-	-	-	-	-	-
				PRE	-	-	-	-	-	-	-	-	-	-	-	-
B-G-2	100674	ISI/VT/ISI-VT-1.0	ISI-13142-35-A	ISI	-	-	-	-	-	c	-	-	-	-	-	-
B7.50	B- 3		Flange Bolts @ W-16	AUG	-	-	-	-	-	-	-	-	-	-	-	-
1	Main Steam C			OWN	-	-	-	-	-	-	-	-	-	-	-	-
				PRE	-	-	-	-	-	-	-	-	-	-	-	-
B-G-2	100675	ISI/VT/ISI-VT-1.0	ISI-13142-35-A	ISI	c	-	-	-	-	B	-	-	b	-	-	-
B7.50	B- 4		Flange Bolts @ W-18	AUG	-	-	-	-	-	-	-	-	-	-	-	-
1	Main Steam C			OWN	-	-	-	-	-	-	-	-	-	-	-	-
				PRE	-	-	-	-	-	-	-	-	-	-	-	-
B-G-2	100676	ISI/VT/ISI-VT-1.0	ISI-13142-35-A	ISI	c	-	-	-	-	B	-	-	-	-	-	-
B7.50	B- 5		Flange Bolts @ W-14	AUG	-	-	-	-	-	-	-	-	-	-	-	-
1	Main Steam C			OWN	-	-	-	-	-	-	-	-	-	-	-	-
				PRE	-	-	-	-	-	-	-	-	-	-	-	-

MONTICELLO Nuclear Generating Plant
3rd Interval ISI Plan Rev. 3 June 1, 1992 to May 31, 2002

Category, ItemNO, Class	Summary / CompID / System	Scope / Method / Procedure	Iso No. Comp. Desc. Code Case /Note		Period 1				Period 2				Period 3			
					1	2	3	4	1	2	3	4	1	2	3	4
B-G-2	100677	ISI/VT/ISI-VT-1.0	ISI-13142-35-A	ISI	c	-	-	-	-	B	-	-	b	-	-	-
B7.70	B- 6		Valve Bolts	AUG	-	-	-	-	-	-	-	-	-	-	-	-
1	Main Steam C			OWN	-	-	-	-	-	-	-	-	-	-	-	-
				PRE	-	-	-	-	-	-	-	-	-	-	-	-
B-G-2	100679	ISI/VT/ISI-VT-1.0	ISI-13142-35-A	ISI	c	-	-	-	-	B	-	-	-	-	-	-
B7.70	B- 7		Valve Bolts	AUG	-	-	-	-	-	-	-	-	-	-	-	-
1	Main Steam C			OWN	-	-	-	-	-	-	-	-	-	-	-	-
				PRE	-	-	-	-	-	-	-	-	-	-	-	-
B-K-1	100681	ISI/MT/ISI-MT-1	ISI-13142-35-A	ISI	-	-	-	-	-	-	-	-	-	s	-	-
B10.10	H- 1	ISI/VT/ISI-VT-2.0	Double Spring/4 Lugs	AUG	-	-	-	-	-	-	-	-	-	-	-	-
1	Main Steam C			OWN	-	-	-	-	-	-	-	-	-	-	-	-
				PRE	-	-	-	-	-	-	-	-	-	-	-	-
F-B	100682	ISI/VT/ISI-VT-2.0	ISI-13142-35-A	ISI	-	c	-	-	-	B	-	-	-	-	-	-
F-A,B,C	H- 2		Snubber / Clamp	AUG	-	-	-	-	-	-	-	-	-	-	-	-
1	Main Steam C			OWN	-	-	-	-	-	-	-	-	-	-	-	-
				PRE	-	-	-	-	-	-	-	-	-	-	-	-
F-B	100683	ISI/VT/ISI-VT-2.0	ISI-13142-35-A	ISI	c	B	-	-	-	B	-	-	-	-	-	-
F-A,B,C	H- 3		Snubber / Clamp	AUG	-	-	-	-	-	-	-	-	-	-	-	-
1	Main Steam C			OWN	-	-	-	-	-	-	-	-	-	-	-	-
				PRE	-	-	-	-	-	-	-	-	-	-	-	-
F-C	100684	ISI/VT/ISI-VT-2.0	ISI-13142-35-A	ISI	-	-	-	-	-	c	-	-	-	-	-	-
F-A,B,C	H- 4		Spring / Clamp	AUG	-	-	-	-	-	-	-	-	-	-	-	-
1	Main Steam C			OWN	-	-	-	-	-	-	-	-	-	-	-	-
				PRE	-	-	-	-	-	-	-	-	-	-	-	-
B-K-1	100685	ISI/MT/ISI-MT-1	ISI-13142-35-A	ISI	-	-	-	-	-	-	-	-	-	s	-	-
B10.10	H- 5	ISI/VT/ISI-VT-2.0	Double Spring/4 Lugs	AUG	-	-	-	-	-	-	-	-	-	-	-	-
1	Main Steam C			OWN	-	-	-	-	-	-	-	-	-	-	-	-
				PRE	-	-	-	-	-	-	-	-	-	-	-	-
B-M-2	100687	ISI/VT/ISI-VT-3.0	ISI-13142-35-A	ISI	c	-	-	-	-	-	-	-	-	-	-	-
B12.50	V- 1		Valve Int Surfaces	AUG	-	-	-	-	-	-	-	-	-	-	-	-
1	Main Steam C		NOTE:FF, RELIEF 4	OWN	-	-	-	-	-	-	-	-	-	-	-	-
				PRE	-	-	-	-	-	-	-	-	-	-	-	-
B-M-2	100688	ISI/VT/ISI-VT-3.0	ISI-13142-35-A	ISI	-	-	-	-	-	c	-	-	-	-	-	-
B12.50	V- 2		Valve Int Surfaces	AUG	-	-	-	-	-	-	-	-	-	-	-	-
1	Main Steam C		NOTE:FF, RELIEF 4	OWN	-	-	-	-	-	-	-	-	-	-	-	-
				PRE	-	-	-	-	-	-	-	-	-	-	-	-
B-M-2	100689		ISI-13142-35-A	ISI	-	-	-	-	-	-	-	-	-	-	-	-
B12.50	V- 3		Valve Int Surfaces	AUG	-	-	-	-	-	-	-	-	-	-	-	-
1	Main Steam C		NOTE:FF, RELIEF 4	OWN	-	-	-	-	-	-	-	-	-	-	-	-
				PRE	-	-	-	-	-	-	-	-	-	-	-	-

MONTICELLO Nuclear Generating Plant
3rd Interval ISI Plan Rev. 3 June 1, 1992 to May 31, 2002

Category, ItemNO, Class	Summary / CompID / System	Scope / Method / Procedure	Iso No. Comp. Desc. Code Case /Note		Period 1				Period 2				Period 3			
					1	2	3	4	1	2	3	4	1	2	3	4
B-M-2	100690	ISI/VT/ISI-VT-3.0	ISI-13142-35-A	ISI	c	-	-	-	-	-	-	-	-	-	-	-
B12.50	V- 4		Valve Int Surfaces	AUG	-	-	-	-	-	-	-	-	-	-	-	-
1	Main Steam C		NOTE:FF, RELIEF 4	OWN	-	-	-	-	-	-	-	-	-	-	-	-
				PRE	-	-	-	-	-	-	-	-	-	-	-	-
B-J	100691	ISI/MT/ISI-MT-1	ISI-13142-35-A	ISI	-	-	-	-	-	c	-	-	-	-	-	-
B9.10	W- 1 LS D	ISI/UT/ISI-UT-1	Nozzle-to-Safe End	AUG	-	-	-	-	-	-	-	-	-	-	-	-
1	Main Steam C			OWN	-	-	-	-	-	-	-	-	-	-	-	-
				PRE	-	-	-	-	-	-	-	-	-	-	-	-
B-J	100692	ISI/MT/ISI-MT-1	ISI-13142-35-A	ISI	-	-	-	-	-	c	-	-	-	-	-	-
B9.10	W- 2 LS U	ISI/UT/ISI-UT-1	Safe End-to-Elbow	AUG	-	-	-	-	-	-	-	-	-	-	-	-
1	Main Steam C			OWN	-	-	-	-	-	-	-	-	-	-	-	-
				PRE	-	-	-	-	-	-	-	-	-	-	-	-
B-J	100693		ISI-13142-35-A	ISI	-	-	-	-	-	-	-	-	-	-	-	-
B9.11	W- 3		Elbow-to-Pipe	AUG	-	-	-	-	-	-	-	-	-	-	-	-
1	Main Steam C			OWN	-	-	-	-	-	-	-	-	-	-	-	-
				PRE	-	-	-	-	-	-	-	-	-	-	-	-
B-J	100694		ISI-13142-35-A	ISI	-	-	-	-	-	-	-	-	-	-	-	-
B9.11	W- 4		Elbow-to-Pipe	AUG	-	-	-	-	-	-	-	-	-	-	-	-
1	Main Steam C			OWN	-	-	-	-	-	-	-	-	-	-	-	-
				PRE	-	-	-	-	-	-	-	-	-	-	-	-
B-J	100695		ISI-13142-35-A	ISI	-	-	-	-	-	-	-	-	-	-	-	-
B9.11	W- 5		Pipe-to-Elbow	AUG	-	-	-	-	-	-	-	-	-	-	-	-
1	Main Steam C			OWN	-	-	-	-	-	-	-	-	-	-	-	-
				PRE	-	-	-	-	-	-	-	-	-	-	-	-
B-J	100696		ISI-13142-35-A	ISI	-	-	-	-	-	-	-	-	-	-	-	-
B9.11	W- 6		Elbow-to-Pipe	AUG	-	-	-	-	-	-	-	-	-	-	-	-
1	Main Steam C			OWN	-	-	-	-	-	-	-	-	-	-	-	-
				PRE	-	-	-	-	-	-	-	-	-	-	-	-
B-J	100697		ISI-13142-35-A	ISI	-	-	-	-	-	-	-	-	-	-	-	-
B9.11	W- 7		Pipe-to-Pipe	AUG	-	-	-	-	-	-	-	-	-	-	-	-
1	Main Steam C			OWN	-	-	-	-	-	-	-	-	-	-	-	-
				PRE	-	-	-	-	-	-	-	-	-	-	-	-
B-J	100698		ISI-13142-35-A	ISI	-	-	-	-	-	-	-	-	-	-	-	-
B9.11	W- 8		Pipe-to-Elbow	AUG	-	-	-	-	-	-	-	-	-	-	-	-
1	Main Steam C			OWN	-	-	-	-	-	-	-	-	-	-	-	-
				PRE	-	-	-	-	-	-	-	-	-	-	-	-
B-J	100699		ISI-13142-35-A	ISI	-	-	-	-	-	-	-	-	-	-	-	-
B9.11	W- 9		Elbow-to-Pipe	AUG	-	-	-	-	-	-	-	-	-	-	-	-
1	Main Steam C			OWN	-	-	-	-	-	-	-	-	-	-	-	-
				PRE	-	-	-	-	-	-	-	-	-	-	-	-

MONTICELLO Nuclear Generating Plant
3rd Interval ISI Plan Rev. 3 June 1, 1992 to May 31, 2002

Category, ItemNO, Class	Summary / CompID / System	Scope / Method / Procedure	Iso No. Comp. Desc. Code Case /Note		Period 1				Period 2				Period 3			
					1	2	3	4	1	2	3	4	1	2	3	4
B-J	100700	ISI/MT/ISI-MT-1	ISI-13142-35-A	ISI	c	-	-	-	-	-	-	-	-	-	-	-
B9.11	W-10	ISI/UT/ISI-UT-1	Pipe-to-Elbow	AUG	-	-	-	-	-	-	-	-	-	-	-	-
1	Main Steam C			OWN	-	-	-	-	-	-	-	-	-	-	-	-
				PRE	-	-	-	-	-	-	-	-	-	-	-	-
B-J	100701	ISI/MT/ISI-MT-1	ISI-13142-35-A	ISI	c	-	-	-	-	-	-	-	-	-	-	-
B9.11	W-11	ISI/UT/ISI-UT-1	Elbow-to-Elbow	AUG	-	-	-	-	-	-	-	-	-	-	-	-
1	Main Steam C			OWN	-	-	-	-	-	-	-	-	-	-	-	-
				PRE	-	-	-	-	-	-	-	-	-	-	-	-
B-J	100702	ISI/MT/ISI-MT-1	ISI-13142-35-A	ISI	c	-	-	-	-	-	-	-	-	-	-	-
B9.11	W-12	ISI/UT/ISI-UT-1	Elbow-to-Pipe	AUG	-	-	-	-	-	-	-	-	-	-	-	-
1	Main Steam C			OWN	-	-	-	-	-	-	-	-	-	-	-	-
				PRE	-	-	-	-	-	-	-	-	-	-	-	-
B-J	100703	ISI/MT/ISI-MT-1	ISI-13142-35-A	ISI	-	-	-	-	-	c	-	-	-	-	-	-
B9.31	W-13	ISI/UT/ISI-UT-1	Pipe-to-Sweepolet	AUG	-	-	-	-	-	-	-	-	-	-	-	-
1	Main Steam C			OWN	-	-	-	-	-	-	-	-	-	-	-	-
				PRE	-	-	-	-	-	-	-	-	-	-	-	-
B-J	100704		ISI-13142-35-A	ISI	-	-	-	-	-	-	-	-	-	-	-	-
B9.11	W-14		Sweepolet to Flange	AUG	-	-	-	-	-	-	-	-	-	-	-	-
1	Main Steam C			OWN	-	-	-	-	-	-	-	-	-	-	-	-
				PRE	-	-	-	-	-	-	-	-	-	-	-	-
B-J	100705	ISI/MT/ISI-MT-1	ISI-13142-35-A	ISI	-	-	-	-	-	c	-	-	-	-	-	-
B9.31	W-15	ISI/UT/ISI-UT-1	Pipe-to-Sweepolet	AUG	-	-	-	-	-	-	-	-	-	-	-	-
1	Main Steam C			OWN	-	-	-	-	-	-	-	-	-	-	-	-
				PRE	-	-	-	-	-	-	-	-	-	-	-	-
B-J	100706		ISI-13142-35-A	ISI	-	-	-	-	-	-	-	-	-	-	-	-
B9.11	W-16		Sweepolet to Flange	AUG	-	-	-	-	-	-	-	-	-	-	-	-
1	Main Steam C			OWN	-	-	-	-	-	-	-	-	-	-	-	-
				PRE	-	-	-	-	-	-	-	-	-	-	-	-
B-J	100707		ISI-13142-35-A	ISI	-	-	-	-	-	-	-	-	-	-	-	-
B9.31	W-17		Pipe-to-Sweepolet	AUG	-	-	-	-	-	-	-	-	-	-	-	-
1	Main Steam C			OWN	-	-	-	-	-	-	-	-	-	-	-	-
				PRE	-	-	-	-	-	-	-	-	-	-	-	-
B-J	100708		ISI-13142-35-A	ISI	-	-	-	-	-	-	-	-	-	-	-	-
B9.11	W-18		Sweepolet to Flange	AUG	-	-	-	-	-	-	-	-	-	-	-	-
1	Main Steam C			OWN	-	-	-	-	-	-	-	-	-	-	-	-
				PRE	-	-	-	-	-	-	-	-	-	-	-	-
B-J	100709		ISI-13142-35-A	ISI	-	-	-	-	-	-	-	-	-	-	-	-
B9.32	W-19		Pipe-to-Sweepolet	AUG	-	-	-	-	-	-	-	-	-	-	-	-
1	Main Steam C			OWN	-	-	-	-	-	-	-	-	-	-	-	-
				PRE	-	-	-	-	-	-	-	-	-	-	-	-

MONTICELLO Nuclear Generating Plant
3rd Interval ISI Plan Rev. 3 June 1, 1992 to May 31, 2002

Category, ItemNO, Class	Summary / CompID / System	Scope / Method / Procedure	Iso No. Comp. Desc. Code Case /Note		Period 1				Period 2				Period 3			
					1	2	3	4	1	2	3	4	1	2	3	4
B-J	100710		ISI-13142-35-A	ISI	-	-	-	-	-	-	-	-	-	-	-	-
B9.11	W-20		Pipe-to-Elbow	AUG	-	-	-	-	-	-	-	-	-	-	-	-
1	Main Steam C			OWN	-	-	-	-	-	-	-	-	-	-	-	-
				PRE	-	-	-	-	-	-	-	-	-	-	-	-
B-J	100711	ISI/MT/ISI-MT-1	ISI-13142-35-A	ISI	-	-	-	-	-	-	-	-	-	s	-	-
B9.11	W-21	ISI/UT/ISI-UT-1	Elbow-to-Pipe	AUG	-	-	-	-	-	-	-	-	-	-	-	-
1	Main Steam C			OWN	-	-	-	-	-	-	-	-	-	-	-	-
				PRE	-	-	-	-	-	-	-	-	-	-	-	-
B-J	100712	ISI/MT/ISI-MT-1	ISI-13142-35-A	ISI	-	-	-	-	-	-	-	-	-	s	-	-
B9.11	W-22	ISI/UT/ISI-UT-1	Pipe-to-Elbow	AUG	-	-	-	-	-	-	-	-	-	-	-	-
1	Main Steam C			OWN	-	-	-	-	-	-	-	-	-	-	-	-
				PRE	-	-	-	-	-	-	-	-	-	-	-	-
B-J	100713		ISI-13142-35-A	ISI	-	-	-	-	-	-	-	-	-	-	-	-
B9.11	W-23		Elbow-to-Pipe	AUG	-	-	-	-	-	-	-	-	-	-	-	-
1	Main Steam C			OWN	-	-	-	-	-	-	-	-	-	-	-	-
				PRE	-	-	-	-	-	-	-	-	-	-	-	-
B-J	100714		ISI-13142-35-A	ISI	-	-	-	-	-	-	-	-	-	-	-	-
B9.11	W-24		Pipe-to-Pipe	AUG	-	-	-	-	-	-	-	-	-	-	-	-
1	Main Steam C			OWN	-	-	-	-	-	-	-	-	-	-	-	-
				PRE	-	-	-	-	-	-	-	-	-	-	-	-
B-J	100715		ISI-13142-35-A	ISI	-	-	-	-	-	-	-	-	-	-	-	-
B9.11	W-25		Pipe-to-Elbow	AUG	-	-	-	-	-	-	-	-	-	-	-	-
1	Main Steam C			OWN	-	-	-	-	-	-	-	-	-	-	-	-
				PRE	-	-	-	-	-	-	-	-	-	-	-	-
B-J	100716		ISI-13142-35-A	ISI	-	-	-	-	-	-	-	-	-	-	-	-
B9.11	W-26		Elbow-to-Valve	AUG	-	-	-	-	-	-	-	-	-	-	-	-
1	Main Steam C			OWN	-	-	-	-	-	-	-	-	-	-	-	-
				PRE	-	-	-	-	-	-	-	-	-	-	-	-
B-J	100717		ISI-13142-35-A	ISI	-	-	-	-	-	-	-	-	-	-	-	-
B9.11	W-27		Valve-to-Pipe	AUG	-	-	-	-	-	-	-	-	-	-	-	-
1	Main Steam C			OWN	-	-	-	-	-	-	-	-	-	-	-	-
				PRE	-	-	-	-	-	-	-	-	-	-	-	-
B-J	100718		ISI-13142-35-A	ISI	-	-	-	-	-	-	-	-	-	-	-	-
B9.11	W-28		Pipe-to-Pipe	AUG	-	-	-	-	-	-	-	-	-	-	-	-
1	Main Steam C		NOTE:DD	OWN	-	-	-	-	-	-	-	-	-	-	-	-
				PRE	-	-	-	-	-	-	-	-	-	-	-	-
B-J	100719	ISI/MT/ISI-MT-1	ISI-13142-35-A	ISI	-	-	-	-	-	-	-	-	-	s	-	-
B9.11	W-29	ISI/UT/ISI-UT-1	Pipe-to-Pipe	AUG	-	-	-	-	-	-	-	-	-	-	-	-
1	Main Steam C			OWN	-	-	-	-	-	-	-	-	-	-	-	-
				PRE	-	-	-	-	-	-	-	-	-	-	-	-

MONTICELLO Nuclear Generating Plant
3rd Interval ISI Plan Rev. 3 June 1, 1992 to May 31, 2002

Category, ItemNO, Class	Summary / CompID / System	Scope / Method / Procedure	Iso No. Comp. Desc. Code Case /Note		Period 1				Period 2				Period 3			
					1	2	3	4	1	2	3	4	1	2	3	4
B-J	100720	ISI/MT/ISI-MT-1	ISI-13142-35-A	ISI	-	c	-	-	-	-	-	-	-	-	-	-
B9.11	W-30	ISI/UT/ISI-UT-1	Pipe-to-Pipe	AUG	-	-	-	-	-	-	-	-	-	-	-	-
1	Main Steam C		NOTE:MM	OWN	-	-	-	-	-	-	-	-	-	-	-	-
				PRE	-	-	-	-	-	-	-	-	-	-	-	-
B-J	100721	ISI/UT/ISI-UT-1	ISI-13142-35-A	ISI	-	c	-	-	-	-	-	-	-	-	-	-
B9.11	W-31	ISI/MT/ISI-MT-1	Pipe-to-Pipe	AUG	-	-	-	-	-	-	-	-	-	-	-	-
1	Main Steam C		NOTE:MM	OWN	-	-	-	-	-	-	-	-	-	-	-	-
				PRE	-	-	-	-	-	-	-	-	-	-	-	-
B-J	100722	ISI/UT/ISI-UT-1	ISI-13142-35-A	ISI	-	c	-	-	-	-	-	-	-	-	-	-
B9.11	W-32	ISI/MT/ISI-MT-1	Pipe-to-Pipe	AUG	-	-	-	-	-	-	-	-	-	-	-	-
1	Main Steam C		NOTE:MM	OWN	-	-	-	-	-	-	-	-	-	-	-	-
				PRE	-	-	-	-	-	-	-	-	-	-	-	-
B-J	100723	ISI/MT/ISI-MT-1	ISI-13142-35-A	ISI	-	-	-	-	c	-	-	-	-	-	-	-
B9.11	W-33	ISI/UT/ISI-UT-1	Pipe-to-Pipe	AUG	-	-	-	-	-	-	-	-	-	-	-	-
1	Main Steam C		NOTE:MM	OWN	-	-	-	-	-	-	-	-	-	-	-	-
				PRE	-	-	-	-	-	-	-	-	-	-	-	-
B-J	100724	ISI/MT/ISI-MT-1	ISI-13142-35-A	ISI	c	-	-	-	-	-	-	-	-	-	-	-
B9.11	W-34	ISI/UT/ISI-UT-1	Pipe-to-Valve	AUG	-	-	-	-	-	-	-	-	-	-	-	-
1	Main Steam C		NOTE:MM	OWN	-	-	-	-	-	-	-	-	-	-	-	-
				PRE	-	-	-	-	-	-	-	-	-	-	-	-
B-G-2	100725	ISI/VT/ISI-VT-1.0	ISI-13142-36-A	ISI	c	B	-	-	-	B	-	-	-	-	-	-
B7.50	B- 1		Flange Bolts @ W-13	AUG	-	-	-	-	-	-	-	-	-	-	-	-
1	Main Steam D			OWN	-	-	-	-	-	-	-	-	-	-	-	-
				PRE	-	-	-	-	-	-	-	-	-	-	-	-
B-G-2	100726	ISI/VT/ISI-VT-1.0	ISI-13142-36-A	ISI	-	-	-	-	-	c	-	-	-	-	-	-
B7.50	B- 2		Flange Bolts @ W-15	AUG	-	-	-	-	-	-	-	-	-	-	-	-
1	Main Steam D			OWN	-	-	-	-	-	-	-	-	-	-	-	-
				PRE	-	-	-	-	-	-	-	-	-	-	-	-
B-G-2	100727	ISI/VT/ISI-VT-1.0	ISI-13142-36-A	ISI	c	-	-	-	-	B	-	-	-	-	-	-
B7.50	B- 3		Flange Bolts @ W-17	AUG	-	-	-	-	-	-	-	-	-	-	-	-
1	Main Steam D			OWN	-	-	-	-	-	-	-	-	-	-	-	-
				PRE	-	-	-	-	-	-	-	-	-	-	-	-
B-G-2	100728	ISI/VT/ISI-VT-1.0	ISI-13142-36-A	ISI	-	-	-	-	-	c	-	-	-	-	-	-
B7.50	B- 4		Flange Bolts @ W-19	AUG	-	-	-	-	-	-	-	-	-	-	-	-
1	Main Steam D			OWN	-	-	-	-	-	-	-	-	-	-	-	-
				PRE	-	-	-	-	-	-	-	-	-	-	-	-
B-G-2	100729	ISI/VT/ISI-VT-1.0	ISI-13142-36-A	ISI	-	-	-	-	-	-	-	-	-	s	-	-
B7.50	B- 5		Flange Bolts @ W-21	AUG	-	-	-	-	-	-	-	-	-	-	-	-
1	Main Steam D			OWN	-	-	-	-	-	-	-	-	-	-	-	-
				PRE	-	-	-	-	-	-	-	-	-	-	-	-

MONTICELLO Nuclear Generating Plant
3rd Interval ISI Plan Rev. 3 June 1, 1992 to May 31, 2002

Category, ItemNO, Class	Summary / CompID / System	Scope / Method / Procedure	Iso No. Comp. Desc. Code Case /Note		Period 1				Period 2				Period 3			
					1	2	3	4	1	2	3	4	1	2	3	4
B-G-2	100730	ISI/VT/ISI-VT-1.0	ISI-13142-36-A	ISI	-	-	-	-	-	-	-	-	-	s	-	-
B7.50	B- 6		Flange Bolts @ W-23	AUG	-	-	-	-	-	-	-	-	-	-	-	-
1	Main Steam D			OWN	-	-	-	-	-	-	-	-	-	-	-	-
				PRE	-	-	-	-	-	-	-	-	-	-	-	-
B-G-2	100731	ISI/VT/ISI-VT-1.0	ISI-13142-36-A	ISI	-	c	-	-	-	B	-	-	b	-	-	-
B7.70	B- 7		Valve Bolts	AUG	-	-	-	-	-	-	-	-	-	-	-	-
1	Main Steam D			OWN	-	-	-	-	-	-	-	-	-	-	-	-
				PRE	-	-	-	-	-	-	-	-	-	-	-	-
B-G-2	100732	ISI/VT/ISI-VT-1.0	ISI-13142-36-A	ISI	c	-	-	-	B	-	-	-	b	-	-	-
B7.70	B- 8		Valve Bolts	AUG	-	-	-	-	-	-	-	-	-	-	-	-
1	Main Steam D			OWN	-	-	-	-	-	-	-	-	-	-	-	-
				PRE	-	-	-	-	-	-	-	-	-	-	-	-
B-G-2	100733	ISI/VT/ISI-VT-1.0	ISI-13142-36-A	ISI	c	B	-	-	-	-	-	-	-	-	-	-
B7.70	B- 9		Valve Bolts	AUG	-	-	-	-	-	-	-	-	-	-	-	-
1	Main Steam D			OWN	-	-	-	-	-	-	-	-	-	-	-	-
				PRE	-	-	-	-	-	-	-	-	-	-	-	-
B-G-2	100734	ISI/VT/ISI-VT-1.0	ISI-13142-36-A	ISI	c	-	-	-	-	-	-	-	-	-	-	-
B7.70	B-10		Valve Bolts	AUG	-	-	-	-	-	-	-	-	-	-	-	-
1	Main Steam D			OWN	-	-	-	-	-	-	-	-	-	-	-	-
				PRE	-	-	-	-	-	-	-	-	-	-	-	-
B-K-1	100735	ISI/VT/ISI-VT-2.0	ISI-13142-36-A	ISI	-	-	-	-	-	-	-	-	s	-	-	-
B10.10	H- 1	ISI/MT/ISI-MT-1.0	Double Spring/4 Lugs	AUG	-	-	-	-	-	-	-	-	-	-	-	-
1	Main Steam D			OWN	-	-	-	-	-	-	-	-	-	-	-	-
				PRE	-	-	-	-	-	-	-	-	-	-	-	-
F-B	100737	ISI/VT/ISI-VT-2.0	ISI-13142-36-A	ISI	c	-	-	-	-	B	-	-	e	-	-	-
F-A,B,C	H- 2		Snubber / Clamp	AUG	-	-	-	-	-	-	-	-	-	-	-	-
1	Main Steam D			OWN	-	-	-	-	-	-	-	-	-	-	-	-
				PRE	-	-	-	-	-	-	-	-	-	-	-	-
F-C	100738	ISI/VT/ISI-VT-2.0	ISI-13142-36-A	ISI	-	-	-	-	-	c	-	-	e	-	-	-
F-A,B,C	H- 3		Spring / Clamp	AUG	-	-	-	-	-	-	-	-	-	-	-	-
1	Main Steam D			OWN	-	-	-	-	-	-	-	-	-	-	-	-
				PRE	-	-	-	-	-	-	-	-	-	-	-	-
F-C	100739	ISI/VT/ISI-VT-2.0	ISI-13142-36-A	ISI	-	-	-	-	-	-	-	-	s	-	-	-
F-A,B,C	H- 4		Variable / Spring	AUG	-	-	-	-	-	-	-	-	-	-	-	-
1	Main Steam D			OWN	-	-	-	-	-	-	-	-	-	-	-	-
				PRE	-	-	-	-	-	-	-	-	-	-	-	-
F-B	100740	ISI/VT/ISI-VT-2.0	ISI-13142-36-A	ISI	c	B	-	-	-	-	-	-	-	-	-	-
F-A,B,C	H- 5		Snubber / Clamp	AUG	-	-	-	-	-	-	-	-	-	-	-	-
1	Main Steam D			OWN	-	-	-	-	-	-	-	-	-	-	-	-
				PRE	-	-	-	-	-	-	-	-	-	-	-	-

MONTICELLO Nuclear Generating Plant
3rd Interval ISI Plan Rev. 3 June 1, 1992 to May 31, 2002

Category, ItemNO, Class	Summary / CompID / System	Scope / Method / Procedure	Iso No. Comp. Desc. Code Case /Note		Period 1				Period 2				Period 3			
					1	2	3	4	1	2	3	4	1	2	3	4
F-B	100741	ISI/VT/ISI-VT-2.0	ISI-13142-36-A	ISI	c	-	-	-	-	B	-	-	-	-	-	-
F-A,B,C	H- 6		Snubber / Clamp	AUG	-	-	-	-	-	-	-	-	-	-	-	-
1	Main Steam D			OWN	-	-	-	-	-	-	-	-	-	-	-	-
				PRE	-	-	-	-	-	-	-	-	-	-	-	-
B-K-1	100742	ISI/VT/ISI-VT-2.0	ISI-13142-36-A	ISI	c	-	-	-	-	-	-	-	e	-	-	-
B10.10	H- 7	ISI/MT/ISI-MT-1	Double Spring/4 Lugs	AUG	-	-	-	-	-	-	-	-	-	-	-	-
1	Main Steam D			OWN	-	-	-	-	-	-	-	-	-	-	-	-
				PRE	-	-	-	-	-	-	-	-	-	-	-	-
B-M-2	100743	ISI/VT/ISI-VT-3.0	ISI-13142-36-A	ISI	-	c	-	-	-	B	-	-	-	-	-	-
B12.50	V- 1		Valve Int Surfaces	AUG	-	-	-	-	-	-	-	-	-	-	-	-
1	Main Steam D		NOTE: FF, RELIEF 4	OWN	-	-	-	-	-	-	-	-	-	-	-	-
				PRE	-	-	-	-	-	-	-	-	-	-	-	-
B-M-2	100744	ISI/VT/ISI-VT-3.0	ISI-13142-36-A	ISI	c	-	-	-	-	-	-	-	-	-	-	-
B12.50	V- 2		Valve Int Surfaces	AUG	-	-	-	-	-	-	-	-	-	-	-	-
1	Main Steam D		NOTE: FF, RELIEF 4	OWN	-	-	-	-	-	-	-	-	-	-	-	-
				PRE	-	-	-	-	-	-	-	-	-	-	-	-
B-M-2	100745	ISI/VT/ISI-VT-3.0	ISI-13142-36-A	ISI	c	B	-	-	-	B	-	-	-	-	-	-
B12.50	V- 3		Valve Int Surfaces	AUG	-	-	-	-	-	-	-	-	-	-	-	-
1	Main Steam D		NOTE: FF, RELIEF 4	OWN	-	-	-	-	-	-	-	-	-	-	-	-
				PRE	-	-	-	-	-	-	-	-	-	-	-	-
B-M-2	100746	ISI/VT/ISI-VT-3.0	ISI-13142-36-A	ISI	c	-	-	-	-	-	-	-	-	-	-	-
B12.50	V- 4		Valve Int Surfaces	AUG	-	-	-	-	-	-	-	-	-	-	-	-
1	Main Steam D		NOTE: FF, RELIEF 4	OWN	-	-	-	-	-	-	-	-	-	-	-	-
				PRE	-	-	-	-	-	-	-	-	-	-	-	-
B-J	100747	ISI/MT/ISI-MT-1	ISI-13142-36-A	ISI	c	-	-	-	-	-	-	-	b	-	-	-
B9.10	W- 1 LS D	ISI/UT/ISI-UT-1	Nozzle-to-Safe End	AUG	-	-	-	-	-	-	-	-	-	-	-	-
1	Main Steam D			OWN	-	-	-	-	-	-	-	-	-	-	-	-
				PRE	-	-	-	-	-	-	-	-	-	-	-	-
B-J	100748	ISI/MT/ISI-MT-1	ISI-13142-36-A	ISI	-	-	-	-	-	-	-	-	s	-	-	-
B9.10	W- 2 LS U	ISI/UT/ISI-UT-1	Safe End-to-Elbow	AUG	-	-	-	-	-	-	-	-	-	-	-	-
1	Main Steam D			OWN	-	-	-	-	-	-	-	-	-	-	-	-
				PRE	-	-	-	-	-	-	-	-	-	-	-	-
B-J	100749		ISI-13142-36-A	ISI	-	-	-	-	-	-	-	-	-	-	-	-
B9.11	W- 3		Elbow-to-Pipe	AUG	-	-	-	-	-	-	-	-	-	-	-	-
1	Main Steam D			OWN	-	-	-	-	-	-	-	-	-	-	-	-
				PRE	-	-	-	-	-	-	-	-	-	-	-	-
B-J	100750		ISI-13142-36-A	ISI	-	-	-	-	-	-	-	-	-	-	-	-
B9.11	W- 4		Pipe-to-Elbow	AUG	-	-	-	-	-	-	-	-	-	-	-	-
1	Main Steam D			OWN	-	-	-	-	-	-	-	-	-	-	-	-
				PRE	-	-	-	-	-	-	-	-	-	-	-	-

MONTICELLO Nuclear Generating Plant
3rd Interval ISI Plan Rev. 3 June 1, 1992 to May 31, 2002

Category, ItemNO, Class	Summary / CompID / System	Scope / Method / Procedure	Iso No. Comp. Desc. Code Case /Note		Period 1				Period 2				Period 3			
					1	2	3	4	1	2	3	4	1	2	3	4
B-J	100751		ISI-13142-36-A	ISI	-	-	-	-	-	-	-	-	-	-	-	-
B9.11	W- 5		Elbow-to-Pipe	AUG	-	-	-	-	-	-	-	-	-	-	-	-
1	Main Steam D			OWN	-	-	-	-	-	-	-	-	-	-	-	-
				PRE	-	-	-	-	-	-	-	-	-	-	-	-
B-J	100752		ISI-13142-36-A	ISI	-	-	-	-	-	-	-	-	-	-	-	-
B9.11	W- 6		Pipe-to-Pipe	AUG	-	-	-	-	-	-	-	-	-	-	-	-
1	Main Steam D			OWN	-	-	-	-	-	-	-	-	-	-	-	-
				PRE	-	-	-	-	-	-	-	-	-	-	-	-
B-J	100753		ISI-13142-36-A	ISI	-	-	-	-	-	-	-	-	-	-	-	-
B9.11	W- 7		Pipe-to-Elbow	AUG	-	-	-	-	-	-	-	-	-	-	-	-
1	Main Steam D			OWN	-	-	-	-	-	-	-	-	-	-	-	-
				PRE	-	-	-	-	-	-	-	-	-	-	-	-
B-J	100754	ISI/MT/ISI-MT-1	ISI-13142-36-A	ISI	c	-	-	-	-	-	-	-	-	-	-	-
B9.11	W- 8	ISI/UT/ISI-UT-1	Elbow-to-Pipe	AUG	-	-	-	-	-	-	-	-	-	-	-	-
1	Main Steam D			OWN	-	-	-	-	-	-	-	-	-	-	-	-
				PRE	-	-	-	-	-	-	-	-	-	-	-	-
B-J	100755		ISI-13142-36-A	ISI	-	-	-	-	-	-	-	-	-	-	-	-
B9.11	W- 9		Pipe-to-Elbow	AUG	-	-	-	-	-	-	-	-	-	-	-	-
1	Main Steam D			OWN	-	-	-	-	-	-	-	-	-	-	-	-
				PRE	-	-	-	-	-	-	-	-	-	-	-	-
B-J	100756		ISI-13142-36-A	ISI	-	-	-	-	-	-	-	-	-	-	-	-
B9.11	W-10		Elbow-to-Elbow	AUG	-	-	-	-	-	-	-	-	-	-	-	-
1	Main Steam D			OWN	-	-	-	-	-	-	-	-	-	-	-	-
				PRE	-	-	-	-	-	-	-	-	-	-	-	-
B-J	100757		ISI-13142-36-A	ISI	-	-	-	-	-	-	-	-	-	-	-	-
B9.11	W-11		Elbow-to-Pipe	AUG	-	-	-	-	-	-	-	-	-	-	-	-
1	Main Steam D			OWN	-	-	-	-	-	-	-	-	-	-	-	-
				PRE	-	-	-	-	-	-	-	-	-	-	-	-
B-J	100758	ISI/MT/ISI-MT-1	ISI-13142-36-A	ISI	c	-	-	-	-	-	-	-	-	-	-	-
B9.31	W-12	ISI/UT/ISI-UT-1	Pipe-to-Sweepolet	AUG	-	-	-	-	-	-	-	-	-	-	-	-
1	Main Steam D			OWN	-	-	-	-	-	-	-	-	-	-	-	-
				PRE	-	-	-	-	-	-	-	-	-	-	-	-
B-J	100759		ISI-13142-36-A	ISI	-	-	-	-	-	-	-	-	-	-	-	-
B9.11	W-13		Sweepolet to Flange	AUG	-	-	-	-	-	-	-	-	-	-	-	-
1	Main Steam D			OWN	-	-	-	-	-	-	-	-	-	-	-	-
				PRE	-	-	-	-	-	-	-	-	-	-	-	-
B-J	100760		ISI-13142-36-A	ISI	-	-	-	-	-	-	-	-	-	-	-	-
B9.31	W-14		Pipe-to-Sweepolet	AUG	-	-	-	-	-	-	-	-	-	-	-	-
1	Main Steam D			OWN	-	-	-	-	-	-	-	-	-	-	-	-
				PRE	-	-	-	-	-	-	-	-	-	-	-	-

MONTICELLO Nuclear Generating Plant
3rd Interval ISI Plan Rev. 3 June 1, 1992 to May 31, 2002

Category, ItemNO, Class	Summary / CompID / System	Scope / Method / Procedure	Iso No. Comp. Desc. Code Case /Note		Period 1				Period 2				Period 3			
					1	2	3	4	1	2	3	4	1	2	3	4
B-J	100761		ISI-13142-36-A	ISI	-	-	-	-	-	-	-	-	-	-	-	-
B9.11	W-15		Sweepolet to Flange	AUG	-	-	-	-	-	-	-	-	-	-	-	-
1	Main Steam D			OWN	-	-	-	-	-	-	-	-	-	-	-	-
				PRE	-	-	-	-	-	-	-	-	-	-	-	-
B-J	100762		ISI-13142-36-A	ISI	-	-	-	-	-	-	-	-	-	-	-	-
B9.31	W-16		Pipe-to-Sweepolet	AUG	-	-	-	-	-	-	-	-	-	-	-	-
1	Main Steam D			OWN	-	-	-	-	-	-	-	-	-	-	-	-
				PRE	-	-	-	-	-	-	-	-	-	-	-	-
B-J	100763		ISI-13142-36-A	ISI	-	-	-	-	-	-	-	-	-	-	-	-
B9.11	W-17		Sweepolet to Flange	AUG	-	-	-	-	-	-	-	-	-	-	-	-
1	Main Steam D			OWN	-	-	-	-	-	-	-	-	-	-	-	-
				PRE	-	-	-	-	-	-	-	-	-	-	-	-
B-J	100764	ISI/MT/ISI-MT-1	ISI-13142-36-A	ISI	-	-	-	-	-	C	-	-	-	-	-	-
B9.31	W-18	ISI/UT/ISI-UT-1	Pipe-to-Sweepolet	AUG	-	-	-	-	-	-	-	-	-	-	-	-
1	Main Steam D			OWN	-	-	-	-	-	-	-	-	-	-	-	-
				PRE	-	-	-	-	-	-	-	-	-	-	-	-
B-J	100765		ISI-13142-36-A	ISI	-	-	-	-	-	-	-	-	-	-	-	-
B9.11	W-19		Sweepolet to Flange	AUG	-	-	-	-	-	-	-	-	-	-	-	-
1	Main Steam D			OWN	-	-	-	-	-	-	-	-	-	-	-	-
				PRE	-	-	-	-	-	-	-	-	-	-	-	-
B-J	100766		ISI-13142-36-A	ISI	-	-	-	-	-	-	-	-	-	-	-	-
B9.31	W-20		Pipe-to-Sweepolet	AUG	-	-	-	-	-	-	-	-	-	-	-	-
1	Main Steam D			OWN	-	-	-	-	-	-	-	-	-	-	-	-
				PRE	-	-	-	-	-	-	-	-	-	-	-	-
B-J	100767		ISI-13142-36-A	ISI	-	-	-	-	-	-	-	-	-	-	-	-
B9.11	W-21		Sweepolet to Flange	AUG	-	-	-	-	-	-	-	-	-	-	-	-
1	Main Steam D			OWN	-	-	-	-	-	-	-	-	-	-	-	-
				PRE	-	-	-	-	-	-	-	-	-	-	-	-
B-J	100768		ISI-13142-36-A	ISI	-	-	-	-	-	-	-	-	-	-	-	-
B9.31	W-22		Pipe-to-Sweepolet	AUG	-	-	-	-	-	-	-	-	-	-	-	-
1	Main Steam D			OWN	-	-	-	-	-	-	-	-	-	-	-	-
				PRE	-	-	-	-	-	-	-	-	-	-	-	-
B-J	100769		ISI-13142-36-A	ISI	-	-	-	-	-	-	-	-	-	-	-	-
B9.11	W-23		Sweepolet to Flange	AUG	-	-	-	-	-	-	-	-	-	-	-	-
1	Main Steam D			OWN	-	-	-	-	-	-	-	-	-	-	-	-
				PRE	-	-	-	-	-	-	-	-	-	-	-	-
B-J	100770		ISI-13142-36-A	ISI	-	-	-	-	-	-	-	-	-	-	-	-
B9.11	W-24		Pipe-to-Elbow	AUG	-	-	-	-	-	-	-	-	-	-	-	-
1	Main Steam D			OWN	-	-	-	-	-	-	-	-	-	-	-	-
				PRE	-	-	-	-	-	-	-	-	-	-	-	-

MONTICELLO Nuclear Generating Plant
3rd Interval ISI Plan Rev. 3 June 1, 1992 to May 31, 2002

Category, ItemNO, Class	Summary / CompID / System	Scope / Method / Procedure	Iso No. Comp. Desc. Code Case /Note		Period 1				Period 2				Period 3			
					1	2	3	4	1	2	3	4	1	2	3	4
B-J	100771	ISI/MT/ISI-MT-1	ISI-13142-36-A	ISI	c	-	-	-	-	-	-	-	-	-	-	-
B9.11	W-25	ISI/UT/ISI-UT-1	Elbow-to-Pipe	AUG	-	-	-	-	-	-	-	-	-	-	-	-
1	Main Steam D			OWN	-	-	-	-	-	-	-	-	-	-	-	-
				PRE	-	-	-	-	-	-	-	-	-	-	-	-
B-J	100772	ISI/MT/ISI-MT-1	ISI-13142-36-A	ISI	-	-	-	-	-	-	-	-	-	s	-	-
B9.11	W-26	ISI/UT/ISI-UT-1	Pipe-to-Elbow	AUG	-	-	-	-	-	-	-	-	-	-	-	-
1	Main Steam D			OWN	-	-	-	-	-	-	-	-	-	-	-	-
				PRE	-	-	-	-	-	-	-	-	-	-	-	-
B-J	100773		ISI-13142-36-A	ISI	-	-	-	-	-	-	-	-	-	-	-	-
B9.11	W-27		Elbow-to-Pipe	AUG	-	-	-	-	-	-	-	-	-	-	-	-
1	Main Steam D			OWN	-	-	-	-	-	-	-	-	-	-	-	-
				PRE	-	-	-	-	-	-	-	-	-	-	-	-
B-J	100774	ISI/MT/ISI-MT-1	ISI-13142-36-A	ISI	-	-	-	-	-	c	-	-	-	-	-	-
B9.11	W-28	ISI/UT/ISI-UT-1	Pipe-to-Valve	AUG	-	-	-	-	-	-	-	-	-	-	-	-
1	Main Steam D			OWN	-	-	-	-	-	-	-	-	-	-	-	-
				PRE	-	-	-	-	-	-	-	-	-	-	-	-
B-J	100775	ISI/MT/ISI-MT-1	ISI-13142-36-A	ISI	-	-	-	-	-	c	-	-	-	-	-	-
B9.11	W-29	ISI/UT/ISI-UT-1	Valve-to-Pipe	AUG	-	-	-	-	-	-	-	-	-	-	-	-
1	Main Steam D			OWN	-	-	-	-	-	-	-	-	-	-	-	-
				PRE	-	-	-	-	-	-	-	-	-	-	-	-
B-J	100776		ISI-13142-36-A	ISI	-	-	-	-	-	-	-	-	-	-	-	-
B9.11	W-30		Pipe-to-Pipe	AUG	-	-	-	-	-	-	-	-	-	-	-	-
1	Main Steam D		NOTE: DD	OWN	-	-	-	-	-	-	-	-	-	-	-	-
				PRE	-	-	-	-	-	-	-	-	-	-	-	-
B-J	100777	ISI/MT/ISI-MT-1	ISI-13142-36-A	ISI	-	-	-	-	-	-	-	-	-	s	-	-
B9.11	W-31	ISI/UT/ISI-UT-1	Pipe-to-Pipe	AUG	-	-	-	-	-	-	-	-	-	-	-	-
1	Main Steam D			OWN	-	-	-	-	-	-	-	-	-	-	-	-
				PRE	-	-	-	-	-	-	-	-	-	-	-	-
B-J	100778	ISI/UT/ISI-UT-1	ISI-13142-36-A	ISI	-	c	-	-	-	-	-	-	-	-	-	-
B9.11	W-32	ISI/MT/ISI-MT-1	Pipe-to-Pipe	AUG	-	-	-	-	-	-	-	-	-	-	-	-
1	Main Steam D		NOTE: MM	OWN	-	-	-	-	-	-	-	-	-	-	-	-
				PRE	-	-	-	-	-	-	-	-	-	-	-	-
B-J	100779	ISI/MT/ISI-MT-1	ISI-13142-36-A	ISI	-	-	-	-	c	-	-	-	-	-	-	-
B9.11	W-33	ISI/UT/ISI-UT-1	Pipe-to-Pipe	AUG	-	-	-	-	-	-	-	-	-	-	-	-
1	Main Steam D		NOTE: MM	OWN	-	-	-	-	-	-	-	-	-	-	-	-
				PRE	-	-	-	-	-	-	-	-	-	-	-	-
B-J	100780	ISI/PT/ISI-PT-1	ISI-13142-36-A	ISI	-	c	-	-	-	-	-	-	-	-	-	-
B9.11	W-34	ISI/UT/ISI-UT-16	Pipe-to-Pipe	AUG	-	-	-	-	-	-	-	-	-	-	-	-
1	Main Steam D		NOTE: MM	OWN	-	-	-	-	-	-	-	-	-	-	-	-
				PRE	-	-	-	-	-	-	-	-	-	-	-	-

MONTICELLO Nuclear Generating Plant
3rd Interval ISI Plan Rev. 3 June 1, 1992 to May 31, 2002

Category, ItemNO, Class	Summary / CompID / System	Scope / Method / Procedure	Iso No. Comp. Desc. Code Case /Note		Period 1				Period 2				Period 3			
					1	2	3	4	1	2	3	4	1	2	3	4
B-J	100781	ISI/MT/ISI-MT-1	ISI-13142-36-A	ISI	c	-	-	-	-	-	-	-	-	-	-	-
B9.11	W-35	ISI/UT/ISI-UT-1	Pipe-to-Valve	AUG	-	-	-	-	-	-	-	-	-	-	-	-
1	Main Steam D		NOTE: MM	OWN	-	-	-	-	-	-	-	-	-	-	-	-
				PRE	-	-	-	-	-	-	-	-	-	-	-	-
F-C	100782	ISI/VT/ISI-VT-2.0	ISI-13142-37-A	ISI	-	-	-	-	-	-	-	-	s	-	-	-
F-A,B,C	H- 1		Spring / Clamp	AUG	-	-	-	-	-	-	-	-	-	-	-	-
2	RHR Discharge A			OWN	-	-	-	-	-	-	-	-	-	-	-	-
				PRE	-	-	-	-	-	-	-	-	-	-	-	-
F-C	100783	ISI/VT/ISI-VT-2.0	ISI-13142-37-A	ISI	-	-	-	-	-	-	-	-	s	-	-	-
F-A,B,C	H- 2		Spring / Clamp	AUG	-	-	-	-	-	-	-	-	-	-	-	-
2	RHR Discharge A			OWN	-	-	-	-	-	-	-	-	-	-	-	-
				PRE	-	-	-	-	-	-	-	-	-	-	-	-
F-B	100784	ISI/VT/ISI-VT-2.0	ISI-13142-37-A	ISI	c	B	-	-	-	-	-	-	-	-	-	-
F-A,B,C	H- 3		Snubber	AUG	-	-	-	-	-	-	-	-	-	-	-	-
2	RHR Discharge A			OWN	-	-	-	-	-	-	-	-	-	-	-	-
				PRE	-	-	-	-	-	-	-	-	-	-	-	-
F-C	100785	ISI/VT/ISI-VT-2.0	ISI-13142-37-A	ISI	c	-	-	-	-	-	-	-	-	-	-	-
F-A,B,C	H- 4		Dbl Spring / Clamp	AUG	-	-	-	-	-	-	-	-	-	-	-	-
2	RHR Discharge A			OWN	-	-	-	-	-	-	-	-	-	-	-	-
				PRE	-	-	-	-	-	-	-	-	-	-	-	-
F-B	100786	ISI/VT/ISI-VT-2.0	ISI-13142-37-A	ISI	-	-	-	-	-	-	-	-	s	-	-	-
F-A,B,C	H- 5		Dbl Strut / Clamp	AUG	-	-	-	-	-	-	-	-	-	-	-	-
2	RHR Discharge A			OWN	-	-	-	-	-	-	-	-	-	-	-	-
				PRE	-	-	-	-	-	-	-	-	-	-	-	-
F-B	100787	ISI/VT/ISI-VT-2.0	ISI-13142-37-A	ISI	c	-	-	-	-	-	-	-	-	b	-	-
F-A,B,C	H- 6		Strut / Clamp	AUG	-	-	-	-	-	-	-	-	-	-	-	-
2	RHR Discharge A			OWN	-	-	-	-	-	-	-	-	-	-	-	-
				PRE	-	-	-	-	-	-	-	-	-	-	-	-
C-C	100788	ISI/MT/ISI-MT-1	ISI-13142-37-A	ISI	c	B	-	-	-	-	-	-	-	-	-	-
C3.20	H- 7	ISI/VT/ISI-VT-2.0	Dbl Spring / 4 Lugs	AUG	-	-	-	-	-	-	-	-	-	-	-	-
2	RHR Discharge A			OWN	-	-	-	-	-	-	-	-	-	-	-	-
				PRE	-	-	-	-	-	-	-	-	-	-	-	-
F-C	100790	ISI/VT/ISI-VT-2.0	ISI-13142-37-A	ISI	c	-	-	-	-	-	-	-	-	-	-	-
F-A,B,C	H- 8		Variable / Clamp	AUG	-	-	-	-	-	-	-	-	-	-	-	-
2	RHR Discharge A			OWN	-	-	-	-	-	-	-	-	-	-	-	-
				PRE	-	-	-	-	-	-	-	-	-	-	-	-
C-F-2	100791		ISI-13142-37-A	ISI	-	-	-	-	-	-	-	-	-	-	-	-
C5.51	W- 1		Pipe-to-Tee	AUG	-	-	-	-	-	-	-	-	-	-	-	-
2	RHR Discharge A			OWN	-	-	-	-	-	-	-	-	-	-	-	-
				PRE	-	-	-	-	-	-	-	-	-	-	-	-

MONTICELLO Nuclear Generating Plant
3rd Interval ISI Plan Rev. 3 June 1, 1992 to May 31, 2002

Category, ItemNO, Class	Summary / CompID / System	Scope / Method / Procedure	Iso No. Comp. Desc. Code Case /Note		Period 1				Period 2				Period 3			
					1	2	3	4	1	2	3	4	1	2	3	4
C-F-2	100792		ISI-13142-37-A	ISI	-	-	-	-	-	-	-	-	-	-	-	-
C5.51	W- 2		Tee-to-Reducer	AUG	-	-	-	-	-	-	-	-	-	-	-	-
2	RHR Discharge A			OWN	-	-	-	-	-	-	-	-	-	-	-	-
				PRE	-	-	-	-	-	-	-	-	-	-	-	-
C-F-2	100793		ISI-13142-37-A	ISI	-	-	-	-	-	-	-	-	-	-	-	-
C5.51	W- 3		Tee-to-Pipe	AUG	-	-	-	-	-	-	-	-	-	-	-	-
2	RHR Discharge A			OWN	-	-	-	-	-	-	-	-	-	-	-	-
				PRE	-	-	-	-	-	-	-	-	-	-	-	-
C-F-2	100794		ISI-13142-37-A	ISI	-	-	-	-	-	-	-	-	-	-	-	-
C5.51	W- 4		Pipe-to-Pipe	AUG	-	-	-	-	-	-	-	-	-	-	-	-
2	RHR Discharge A			OWN	-	-	-	-	-	-	-	-	-	-	-	-
				PRE	-	-	-	-	-	-	-	-	-	-	-	-
C-F-2	100795		ISI-13142-37-A	ISI	-	-	-	-	-	-	-	-	-	-	-	-
C5.51	W- 5		Pipe-to-Pipe	AUG	-	-	-	-	-	-	-	-	-	-	-	-
2	RHR Discharge A			OWN	-	-	-	-	-	-	-	-	-	-	-	-
				PRE	-	-	-	-	-	-	-	-	-	-	-	-
C-F-2	100796	ISI/MT/ISI-MT-1	ISI-13142-37-A	ISI	c	-	-	-	-	-	-	-	b	-	-	-
C5.51	W- 6	ISI/UT/ISI-UT-1	Pipe-to-Elbow	AUG	-	-	-	-	-	-	-	-	-	-	-	-
2	RHR Discharge A			OWN	-	-	-	-	-	-	-	-	-	-	-	-
				PRE	-	-	-	-	-	-	-	-	-	-	-	-
C-F-2	100797		ISI-13142-37-A	ISI	-	-	-	-	-	-	-	-	-	-	-	-
C5.51	W- 7		Elbow-to-Pipe	AUG	-	-	-	-	-	-	-	-	-	-	-	-
2	RHR Discharge A			OWN	-	-	-	-	-	-	-	-	-	-	-	-
				PRE	-	-	-	-	-	-	-	-	-	-	-	-
C-F-2	100798		ISI-13142-37-A	ISI	-	-	-	-	-	-	-	-	-	-	-	-
C5.51	W- 8		Pipe-to-Elbow	AUG	-	-	-	-	-	-	-	-	-	-	-	-
2	RHR Discharge A			OWN	-	-	-	-	-	-	-	-	-	-	-	-
				PRE	-	-	-	-	-	-	-	-	-	-	-	-
C-F-2	100799		ISI-13142-37-A	ISI	-	-	-	-	-	-	-	-	-	-	-	-
C5.51	W- 9		Elbow-to-Pipe	AUG	-	-	-	-	-	-	-	-	-	-	-	-
2	RHR Discharge A			OWN	-	-	-	-	-	-	-	-	-	-	-	-
				PRE	-	-	-	-	-	-	-	-	-	-	-	-
C-F-2	100800		ISI-13142-37-A	ISI	-	-	-	-	-	-	-	-	-	-	-	-
C5.51	W-10		Pipe-to-Elbow	AUG	-	-	-	-	-	-	-	-	-	-	-	-
2	RHR Discharge A			OWN	-	-	-	-	-	-	-	-	-	-	-	-
				PRE	-	-	-	-	-	-	-	-	-	-	-	-
C-F-2	100801	ISI/MT/ISI-MT-1	ISI-13142-37-A	ISI	-	c	-	-	-	B	-	-	-	-	-	-
C5.51	W-11	ISI/UT/ISI-UT-1	Elbow-to-Pipe	AUG	-	-	-	-	-	-	-	-	-	-	-	-
2	RHR Discharge A			OWN	-	-	-	-	-	-	-	-	-	-	-	-
				PRE	-	-	-	-	-	-	-	-	-	-	-	-

MONTICELLO Nuclear Generating Plant
3rd Interval ISI Plan Rev. 3 June 1, 1992 to May 31, 2002

Category, ItemNO, Class	Summary / CompID / System	Scope / Method / Procedure	Iso No. Comp. Desc. Code Case /Note		Period 1				Period 2				Period 3			
					1	2	3	4	1	2	3	4	1	2	3	4
C-F-2	100802		ISI-13142-37-A	ISI	-	-	-	-	-	-	-	-	-	-	-	-
C5.51	W-12		Pipe-to-Tee	AUG	-	-	-	-	-	-	-	-	-	-	-	-
2	RHR Discharge A			OWN	-	-	-	-	-	-	-	-	-	-	-	-
				PRE	-	-	-	-	-	-	-	-	-	-	-	-
C-F-2	100803		ISI-13142-37-A	ISI	-	-	-	-	-	-	-	-	-	-	-	-
C5.51	W-13		Valve-to-Elbow	AUG	-	-	-	-	-	-	-	-	-	-	-	-
2	RHR Discharge A			OWN	-	-	-	-	-	-	-	-	-	-	-	-
				PRE	-	-	-	-	-	-	-	-	-	-	-	-
C-F-2	100804		ISI-13142-37-A	ISI	-	-	-	-	-	-	-	-	-	-	-	-
C5.51	W-14		Elbow-to-Pipe	AUG	-	-	-	-	-	-	-	-	-	-	-	-
2	RHR Discharge A			OWN	-	-	-	-	-	-	-	-	-	-	-	-
				PRE	-	-	-	-	-	-	-	-	-	-	-	-
C-F-2	100805		ISI-13142-37-A	ISI	-	-	-	-	-	-	-	-	-	-	-	-
C5.51	W-15		Pipe-to-Reducer	AUG	-	-	-	-	-	-	-	-	-	-	-	-
2	RHR Discharge A			OWN	-	-	-	-	-	-	-	-	-	-	-	-
				PRE	-	-	-	-	-	-	-	-	-	-	-	-
C-F-2	100806		ISI-13142-37-A	ISI	-	-	-	-	-	-	-	-	-	-	-	-
C5.51	W-16		Reducer-to-Elbow	AUG	-	-	-	-	-	-	-	-	-	-	-	-
2	RHR Discharge A			OWN	-	-	-	-	-	-	-	-	-	-	-	-
				PRE	-	-	-	-	-	-	-	-	-	-	-	-
C-F-2	100807		ISI-13142-37-A	ISI	-	-	-	-	-	-	-	-	-	-	-	-
C5.51	W-17		Elbow-to-Tee	AUG	-	-	-	-	-	-	-	-	-	-	-	-
2	RHR Discharge A			OWN	-	-	-	-	-	-	-	-	-	-	-	-
				PRE	-	-	-	-	-	-	-	-	-	-	-	-
C-F-2	100808		ISI-13142-37-A	ISI	-	-	-	-	-	-	-	-	-	-	-	-
C5.51	W-18		Tee-to-Pipe	AUG	-	-	-	-	-	-	-	-	-	-	-	-
2	RHR Discharge A			OWN	-	-	-	-	-	-	-	-	-	-	-	-
				PRE	-	-	-	-	-	-	-	-	-	-	-	-
C-F-2	100809		ISI-13142-37-A	ISI	-	-	-	-	-	-	-	-	-	-	-	-
C5.51	W-19		Pipe-to-Pipe	AUG	-	-	-	-	-	-	-	-	-	-	-	-
2	RHR Discharge A			OWN	-	-	-	-	-	-	-	-	-	-	-	-
				PRE	-	-	-	-	-	-	-	-	-	-	-	-
C-F-2	100810		ISI-13142-37-A	ISI	-	-	-	-	-	-	-	-	-	-	-	-
C5.51	W-20		Pipe-to-Valve	AUG	-	-	-	-	-	-	-	-	-	-	-	-
2	RHR Discharge A			OWN	-	-	-	-	-	-	-	-	-	-	-	-
				PRE	-	-	-	-	-	-	-	-	-	-	-	-
C-F-2	100811	ISI/MT/ISI-MT-1	ISI-13142-37-A	ISI	-	-	-	-	-	-	-	-	s	-	-	-
C5.51	W-21	ISI/UT/ISI-UT-1	Valve-to-Elbow	AUG	-	-	-	-	-	-	-	-	-	-	-	-
2	RHR Discharge A			OWN	-	-	-	-	-	-	-	-	-	-	-	-
				PRE	-	-	-	-	-	-	-	-	-	-	-	-

MONTICELLO Nuclear Generating Plant
3rd Interval ISI Plan Rev. 3 June 1, 1992 to May 31, 2002

Category, ItemNO, Class	Summary / CompID / System	Scope / Method / Procedure	Iso No. Comp. Desc. Code Case /Note		Period 1				Period 2				Period 3			
					1	2	3	4	1	2	3	4	1	2	3	4
C-F-2	100812		ISI-13142-37-A	ISI	-	-	-	-	-	-	-	-	-	-	-	-
C5.51	W-22		Elbow-to-Valve	AUG	-	-	-	-	-	-	-	-	-	-	-	-
2	RHR Discharge A			OWN	-	-	-	-	-	-	-	-	-	-	-	-
				PRE	-	-	-	-	-	-	-	-	-	-	-	-
F-C	100813	ISI/VT/ISI-VT-2.0	ISI-13142-37-B	ISI	c	-	-	-	-	-	-	-	-	-	-	-
F-A,B,C	H- 1		Variable Spring	AUG	-	-	-	-	-	-	-	-	-	-	-	-
2	Containment Spray			OWN	-	-	-	-	-	-	-	-	-	-	-	-
				PRE	-	-	-	-	-	-	-	-	-	-	-	-
C-C	100814	ISI/MT/ISI-MT-1	ISI-13142-37-B	ISI	c	-	-	-	-	-	-	-	-	-	-	-
C3.20	H- 2	ISI/VT/ISI-VT-2.0	Strut / 8 Lugs	AUG	-	-	-	-	-	-	-	-	-	-	-	-
2	Containment Spray			OWN	-	-	-	-	-	-	-	-	-	-	-	-
				PRE	-	-	-	-	-	-	-	-	-	-	-	-
C-C	100815	ISI/MT/ISI-MT-1	ISI-13142-37-B	ISI	c	-	-	-	-	-	-	-	-	-	-	-
C3.20	H- 3	ISI/VT/ISI-VT-2.0	Strut / 8 Lugs	AUG	-	-	-	-	-	-	-	-	-	-	-	-
2	Containment Spray			OWN	-	-	-	-	-	-	-	-	-	-	-	-
				PRE	-	-	-	-	-	-	-	-	-	-	-	-
F-C	100817	ISI/VT/ISI-VT-2.0	ISI-13142-37-B	ISI	c	-	-	-	-	-	-	-	-	-	-	-
F-A,B,C	H- 4		Variable Spring	AUG	-	-	-	-	-	-	-	-	-	-	-	-
2	Containment Spray			OWN	-	-	-	-	-	-	-	-	-	-	-	-
				PRE	-	-	-	-	-	-	-	-	-	-	-	-
C-C	100818	ISI/MT/ISI-MT-1	ISI-13142-37-B	ISI	c	-	-	-	-	-	-	-	-	b	-	-
C3.20	H- 5	ISI/VT/ISI-VT-2.0	Snubber / Lugs	AUG	-	-	-	-	-	-	-	-	-	-	-	-
2	Containment Spray			OWN	-	-	-	-	-	-	-	-	-	-	-	-
				PRE	-	-	-	-	-	-	-	-	-	-	-	-
C-C	100820	ISI/MT/ISI-MT-1	ISI-13142-37-B	ISI	-	-	-	-	-	-	-	-	-	s	-	-
C3.20	H- 6	ISI/VT/ISI-VT-2.0	Dbl Spr/Clamp&Saddle	AUG	-	-	-	-	-	-	-	-	-	-	-	-
2	Containment Spray			OWN	-	-	-	-	-	-	-	-	-	-	-	-
				PRE	-	-	-	-	-	-	-	-	-	-	-	-
C-C	100821	ISI/MT/ISI-MT-1	ISI-13142-37-B	ISI	c	-	-	-	B	-	-	-	-	-	-	-
C3.20	H- 7	ISI/VT/ISI-VT-2.0	Dbl Spring / 4 Lugs	AUG	-	-	-	-	-	-	-	-	-	-	-	-
2	Containment Spray			OWN	-	-	-	-	-	-	-	-	-	-	-	-
				PRE	-	-	-	-	-	-	-	-	-	-	-	-
F-B	100823	ISI/VT/ISI-VT-2.0	ISI-13142-37-B	ISI	-	-	-	-	c	-	-	-	-	-	-	-
F-A,B,C	H- 8		Strut / Clamp	AUG	-	-	-	-	-	-	-	-	-	-	-	-
2	Containment Spray			OWN	-	-	-	-	-	-	-	-	-	-	-	-
				PRE	-	-	-	-	-	-	-	-	-	-	-	-
F-C	100824	ISI/VT/ISI-VT-2.0	ISI-13142-37-B	ISI	-	-	-	-	c	-	-	-	-	-	-	-
F-A,B,C	H- 9		Spring / Clamp	AUG	-	-	-	-	-	-	-	-	-	-	-	-
2	Containment Spray			OWN	-	-	-	-	-	-	-	-	-	-	-	-
				PRE	-	-	-	-	-	-	-	-	-	-	-	-

MONTICELLO Nuclear Generating Plant
3rd Interval ISI Plan Rev. 3 June 1, 1992 to May 31, 2002

Category, ItemNO, Class	Summary / CompID / System	Scope / Method / Procedure	Iso No. Comp. Desc. Code Case /Note		Period 1				Period 2				Period 3			
					1	2	3	4	1	2	3	4	1	2	3	4
F-B	100825	ISI/VT/ISI-VT-2.0	ISI-13142-37-B	ISI	-	-	-	-	C	-	-	-	-	-	-	-
F-A,B,C	H-10		Dbl Strut/Dbl Clamp	AUG	-	-	-	-	-	-	-	-	-	-	-	-
2	Containment Spray			OWN	-	-	-	-	-	-	-	-	-	-	-	-
				PRE	-	-	-	-	-	-	-	-	-	-	-	-
F-C	100826	ISI/VT/ISI-VT-2.0	ISI-13142-37-B	ISI	-	-	-	-	C	-	-	-	-	-	-	-
F-A,B,C	H-11		Spring / Clamp	AUG	-	-	-	-	-	-	-	-	-	-	-	-
2	Containment Spray			OWN	-	-	-	-	-	-	-	-	-	-	-	-
				PRE	-	-	-	-	-	-	-	-	-	-	-	-
F-C	100827	ISI/VT/ISI-VT-2.0	ISI-13142-37-B	ISI	-	-	-	-	-	-	-	-	-	S	-	-
F-A,B,C	H-12		Spring / Clamp	AUG	-	-	-	-	-	-	-	-	-	-	-	-
2	Containment Spray			OWN	-	-	-	-	-	-	-	-	-	-	-	-
				PRE	-	-	-	-	-	-	-	-	-	-	-	-
C-F-2	100828		ISI-13142-37-B	ISI	-	-	-	-	-	-	-	-	-	-	-	-
C5.51	W- 1		Reducer-to-Tee	AUG	-	-	-	-	-	-	-	-	-	-	-	-
2	Containment Spray			OWN	-	-	-	-	-	-	-	-	-	-	-	-
				PRE	-	-	-	-	-	-	-	-	-	-	-	-
C-F-2	100829		ISI-13142-37-B	ISI	-	-	-	-	-	-	-	-	-	-	-	-
C5.51	W- 2		Tee-to-Pipe	AUG	-	-	-	-	-	-	-	-	-	-	-	-
2	Containment Spray			OWN	-	-	-	-	-	-	-	-	-	-	-	-
				PRE	-	-	-	-	-	-	-	-	-	-	-	-
C-F-2	100830		ISI-13142-37-B	ISI	-	-	-	-	-	-	-	-	-	-	-	-
C5.51	W- 3		Pipe-to-Elbow	AUG	-	-	-	-	-	-	-	-	-	-	-	-
2	Containment Spray			OWN	-	-	-	-	-	-	-	-	-	-	-	-
				PRE	-	-	-	-	-	-	-	-	-	-	-	-
C-F-2	100831		ISI-13142-37-B	ISI	-	-	-	-	-	-	-	-	-	-	-	-
C5.51	W- 4		Elbow-to-Pipe	AUG	-	-	-	-	-	-	-	-	-	-	-	-
2	Containment Spray			OWN	-	-	-	-	-	-	-	-	-	-	-	-
				PRE	-	-	-	-	-	-	-	-	-	-	-	-
C-F-2	100832		ISI-13142-37-B	ISI	-	-	-	-	-	-	-	-	-	-	-	-
C5.51	W- 5		Pipe-to-Pipe	AUG	-	-	-	-	-	-	-	-	-	-	-	-
2	Containment Spray			OWN	-	-	-	-	-	-	-	-	-	-	-	-
				PRE	-	-	-	-	-	-	-	-	-	-	-	-
C-F-2	100833		ISI-13142-37-B	ISI	-	-	-	-	-	-	-	-	-	-	-	-
C5.51	W- 6		Pipe-to-Elbow	AUG	-	-	-	-	-	-	-	-	-	-	-	-
2	Containment Spray			OWN	-	-	-	-	-	-	-	-	-	-	-	-
				PRE	-	-	-	-	-	-	-	-	-	-	-	-
C-F-2	100834		ISI-13142-37-B	ISI	-	-	-	-	-	-	-	-	-	-	-	-
C5.51	W- 7		Elbow-to-Elbow	AUG	-	-	-	-	-	-	-	-	-	-	-	-
2	Containment Spray			OWN	-	-	-	-	-	-	-	-	-	-	-	-
				PRE	-	-	-	-	-	-	-	-	-	-	-	-

MONTICELLO Nuclear Generating Plant
3rd Interval ISI Plan Rev. 3 June 1, 1992 to May 31, 2002

Category, ItemNO, Class	Summary / CompID / System	Scope / Method / Procedure	Iso No. Comp. Desc. Code Case /Note		Period 1				Period 2				Period 3			
					1	2	3	4	1	2	3	4	1	2	3	4
C-F-2	100835		ISI-13142-37-B	ISI	-	-	-	-	-	-	-	-	-	-	-	-
C5.51	W- 8		Elbow-to-Pipe	AUG	-	-	-	-	-	-	-	-	-	-	-	-
2	Containment Spray			OWN	-	-	-	-	-	-	-	-	-	-	-	-
				PRE	-	-	-	-	-	-	-	-	-	-	-	-
C-F-2	100836		ISI-13142-37-B	ISI	-	-	-	-	-	-	-	-	-	-	-	-
C5.51	W- 9		Pipe-to-Tee	AUG	-	-	-	-	-	-	-	-	-	-	-	-
2	Containment Spray			OWN	-	-	-	-	-	-	-	-	-	-	-	-
				PRE	-	-	-	-	-	-	-	-	-	-	-	-
C-F-2	100837		ISI-13142-37-B	ISI	-	-	-	-	-	-	-	-	-	-	-	-
C5.51	W-10		Pipe-to-Valve	AUG	-	-	-	-	-	-	-	-	-	-	-	-
2	Containment Spray			OWN	-	-	-	-	-	-	-	-	-	-	-	-
				PRE	-	-	-	-	-	-	-	-	-	-	-	-
C-F-2	100838		ISI-13142-37-B	ISI	-	-	-	-	-	-	-	-	-	-	-	-
C5.51	W-11		Tee-to-Pipe	AUG	-	-	-	-	-	-	-	-	-	-	-	-
2	Containment Spray			OWN	-	-	-	-	-	-	-	-	-	-	-	-
				PRE	-	-	-	-	-	-	-	-	-	-	-	-
C-F-2	100839		ISI-13142-37-B	ISI	-	-	-	-	-	-	-	-	-	-	-	-
C5.51	W-12		Tee-to-Pipe	AUG	-	-	-	-	-	-	-	-	-	-	-	-
2	Containment Spray			OWN	-	-	-	-	-	-	-	-	-	-	-	-
				PRE	-	-	-	-	-	-	-	-	-	-	-	-
C-F-2	100840		ISI-13142-37-B	ISI	-	-	-	-	-	-	-	-	-	-	-	-
C5.51	W-13		Pipe-to-Elbow	AUG	-	-	-	-	-	-	-	-	-	-	-	-
2	Containment Spray			OWN	-	-	-	-	-	-	-	-	-	-	-	-
				PRE	-	-	-	-	-	-	-	-	-	-	-	-
C-F-2	100841	ISI/MT/ISI-MT-1	ISI-13142-37-B	ISI	-	-	-	-	c	-	-	-	-	-	-	-
C5.51	W-14	ISI/UT/ISI-UT-1	Elbow-to-Pipe	AUG	-	-	-	-	-	-	-	-	-	-	-	-
2	Containment Spray			OWN	-	-	-	-	-	-	-	-	-	-	-	-
				PRE	-	-	-	-	-	-	-	-	-	-	-	-
C-F-2	100842		ISI-13142-37-B	ISI	-	-	-	-	-	-	-	-	-	-	-	-
C5.51	W-15		Pipe-to-Elbow	AUG	-	-	-	-	-	-	-	-	-	-	-	-
2	Containment Spray			OWN	-	-	-	-	-	-	-	-	-	-	-	-
				PRE	-	-	-	-	-	-	-	-	-	-	-	-
C-F-2	100843		ISI-13142-37-B	ISI	-	-	-	-	-	-	-	-	-	-	-	-
C5.51	W-16		Elbow-to-Pipe	AUG	-	-	-	-	-	-	-	-	-	-	-	-
2	Containment Spray			OWN	-	-	-	-	-	-	-	-	-	-	-	-
				PRE	-	-	-	-	-	-	-	-	-	-	-	-
C-F-2	100844		ISI-13142-37-B	ISI	-	-	-	-	-	-	-	-	-	-	-	-
C5.51	W-17		Pipe-to-Pipe	AUG	-	-	-	-	-	-	-	-	-	-	-	-
2	Containment Spray			OWN	-	-	-	-	-	-	-	-	-	-	-	-
				PRE	-	-	-	-	-	-	-	-	-	-	-	-

MONTICELLO Nuclear Generating Plant
3rd Interval ISI Plan Rev. 3 June 1, 1992 to May 31, 2002

Category, ItemNO, Class	Summary / CompID / System	Scope / Method / Procedure	Iso No. Comp. Desc. Code Case /Note		Period 1				Period 2				Period 3			
					1	2	3	4	1	2	3	4	1	2	3	4
C-F-2	100845	ISI/MT/ISI-MT-1	ISI-13142-37-B	ISI	-	-	-	-	-	-	-	-	-	s	-	-
C5.51	W-18	ISI/UT/ISI-UT-1	Pipe-to-Reducer	AUG	-	-	-	-	-	-	-	-	-	-	-	-
2	Containment Spray			OWN	-	-	-	-	-	-	-	-	-	-	-	-
				PRE	-	-	-	-	-	-	-	-	-	-	-	-
C-F-2	100846		ISI-13142-37-B	ISI	-	-	-	-	-	-	-	-	-	-	-	-
C5.51	W-19		Reducer-to-Valve	AUG	-	-	-	-	-	-	-	-	-	-	-	-
2	Containment Spray			OWN	-	-	-	-	-	-	-	-	-	-	-	-
				PRE	-	-	-	-	-	-	-	-	-	-	-	-
F-C	100847	ISI/VT/ISI-VT-2.0	ISI-13142-37-C	ISI	c	-	-	-	-	-	-	-	-	-	-	-
F-A,B,C	H- 1		Spring / Clamp	AUG	-	-	-	-	-	-	-	-	-	-	-	-
2	RHR Discharge A			OWN	-	-	-	-	-	-	-	-	-	-	-	-
				PRE	-	-	-	-	-	-	-	-	-	-	-	-
F-C	100848	ISI/VT/ISI-VT-2.0	ISI-13142-37-C	ISI	-	c	-	-	-	-	-	-	-	-	-	-
F-A,B,C	H- 2		Spring / Clamp	AUG	-	-	-	-	-	-	-	-	-	-	-	-
2	RHR Discharge A			OWN	-	-	-	-	-	-	-	-	-	-	-	-
				PRE	-	-	-	-	-	-	-	-	-	-	-	-
F-C	100849	ISI/VT/ISI-VT-2.0	ISI-13142-37-C	ISI	-	-	-	-	-	c	-	-	-	-	-	-
F-A,B,C	H- 3		Variable Spring	AUG	-	-	-	-	-	-	-	-	-	-	-	-
2	RHR Discharge A			OWN	-	-	-	-	-	-	-	-	-	-	-	-
				PRE	-	-	-	-	-	-	-	-	-	-	-	-
F-B	100850	ISI/VT/ISI-VT-2.0	ISI-13142-37-C	ISI	c	-	-	-	-	B	-	-	-	-	-	-
F-A,B,C	H- 4		Dbl Strut-&-Snubber	AUG	-	-	-	-	-	-	-	-	-	-	-	-
2	RHR Discharge A			OWN	-	-	-	-	-	-	-	-	-	-	-	-
				PRE	-	-	-	-	-	-	-	-	-	-	-	-
F-C	100851		ISI-13142-37-C	ISI	-	-	-	-	-	-	-	-	-	-	-	-
F-A,B,C	H- 5		Dbl Strut / Clamp	AUG	-	-	-	-	-	-	-	-	-	-	-	-
2	RHR Discharge A			OWN	-	-	-	-	-	-	-	-	-	-	-	-
				PRE	-	-	-	-	-	-	-	-	-	-	-	-
C-F-2	100852	ISI/MT/ISI-MT-1	ISI-13142-37-C	ISI	-	c	-	-	-	-	-	-	-	-	-	-
C5.51	W- 1	ISI/UT/ISI-UT-1	Tee-to-Pipe	AUG	-	-	-	-	-	-	-	-	-	-	-	-
2	RHR Discharge A			OWN	-	-	-	-	-	-	-	-	-	-	-	-
				PRE	-	-	-	-	-	-	-	-	-	-	-	-
C-F-2	100853	ISI/LT/ISI-MT-1	ISI-13142-37-C	ISI	-	c	-	-	-	-	-	-	-	-	-	-
C5.51	W- 2	ISI/UT/ISI-UT-1	Pipe-to-Elbow	AUG	-	-	-	-	-	-	-	-	-	-	-	-
2	RHR Discharge A			OWN	-	-	-	-	-	-	-	-	-	-	-	-
				PRE	-	-	-	-	-	-	-	-	-	-	-	-
C-F-2	100854		ISI-13142-37-C	ISI	-	-	-	-	-	-	-	-	-	-	-	-
C5.51	W- 3		Elbow-to-Pipe	AUG	-	-	-	-	-	-	-	-	-	-	-	-
2	RHR Discharge A			OWN	-	-	-	-	-	-	-	-	-	-	-	-
				PRE	-	-	-	-	-	-	-	-	-	-	-	-

MONTICELLO Nuclear Generating Plant
3rd Interval ISI Plan Rev. 3 June 1, 1992 to May 31, 2002

Category, ItemNO, Class	Summary / CompID / System	Scope / Method / Procedure	Iso No. Comp. Desc. Code Case /Note		Period 1				Period 2				Period 3			
					1	2	3	4	1	2	3	4	1	2	3	4
C-F-2	100855		ISI-13142-37-C	ISI	-	-	-	-	-	-	-	-	-	-	-	-
C5.51	W- 4		Pipe-to-Elbow	AUG	-	-	-	-	-	-	-	-	-	-	-	-
2	RHR Discharge A			OWN	-	-	-	-	-	-	-	-	-	-	-	-
				PRE	-	-	-	-	-	-	-	-	-	-	-	-
C-F-2	100856		ISI-13142-37-C	ISI	-	-	-	-	-	-	-	-	-	-	-	-
C5.51	W- 5		Elbow-to-Valve	AUG	-	-	-	-	-	-	-	-	-	-	-	-
2	RHR Discharge A			OWN	-	-	-	-	-	-	-	-	-	-	-	-
				PRE	-	-	-	-	-	-	-	-	-	-	-	-
C-F-2	100857		ISI-13142-37-C	ISI	-	-	-	-	-	-	-	-	-	-	-	-
C5.51	W- 6		Valve-to-Pipe	AUG	-	-	-	-	-	-	-	-	-	-	-	-
2	RHR Discharge A			OWN	-	-	-	-	-	-	-	-	-	-	-	-
				PRE	-	-	-	-	-	-	-	-	-	-	-	-
C-F-2	100858		ISI-13142-37-C	ISI	-	-	-	-	-	-	-	-	-	-	-	-
C5.51	W- 7		Pipe-to-Elbow	AUG	-	-	-	-	-	-	-	-	-	-	-	-
2	RHR Discharge A			OWN	-	-	-	-	-	-	-	-	-	-	-	-
				PRE	-	-	-	-	-	-	-	-	-	-	-	-
C-F-2	100859		ISI-13142-37-C	ISI	-	-	-	-	-	-	-	-	-	-	-	-
C5.51	W- 8		Elbow-to-Pipe	AUG	-	-	-	-	-	-	-	-	-	-	-	-
2	RHR Discharge A			OWN	-	-	-	-	-	-	-	-	-	-	-	-
				PRE	-	-	-	-	-	-	-	-	-	-	-	-
C-F-2	100860		ISI-13142-37-C	ISI	-	-	-	-	-	-	-	-	-	-	-	-
C5.51	W- 9		Pipe-to-Elbow	AUG	-	-	-	-	-	-	-	-	-	-	-	-
2	RHR Discharge A			OWN	-	-	-	-	-	-	-	-	-	-	-	-
				PRE	-	-	-	-	-	-	-	-	-	-	-	-
C-F-2	100861		ISI-13142-37-C	ISI	-	-	-	-	-	-	-	-	-	-	-	-
C5.51	W-10		Elbow-to-Tee	AUG	-	-	-	-	-	-	-	-	-	-	-	-
2	RHR Discharge A			OWN	-	-	-	-	-	-	-	-	-	-	-	-
				PRE	-	-	-	-	-	-	-	-	-	-	-	-
C-F-2	100862		ISI-13142-37-C	ISI	-	-	-	-	-	-	-	-	-	-	-	-
C5.51	W-11		Nozzle-to-Reducer	AUG	-	-	-	-	-	-	-	-	-	-	-	-
2	RHR Discharge A			OWN	-	-	-	-	-	-	-	-	-	-	-	-
				PRE	-	-	-	-	-	-	-	-	-	-	-	-
C-F-2	100863		ISI-13142-37-C	ISI	-	-	-	-	-	-	-	-	-	-	-	-
C5.51	W-12		Reducer-to-Elbow	AUG	-	-	-	-	-	-	-	-	-	-	-	-
2	RHR Discharge A			OWN	-	-	-	-	-	-	-	-	-	-	-	-
				PRE	-	-	-	-	-	-	-	-	-	-	-	-
C-F-2	100864		ISI-13142-37-C	ISI	-	-	-	-	-	-	-	-	-	-	-	-
C5.51	W-13		Elbow-to-Pipe	AUG	-	-	-	-	-	-	-	-	-	-	-	-
2	RHR Discharge A			OWN	-	-	-	-	-	-	-	-	-	-	-	-
				PRE	-	-	-	-	-	-	-	-	-	-	-	-

MONTICELLO Nuclear Generating Plant
3rd Interval ISI Plan Rev. 3 June 1, 1992 to May 31, 2002

Category, ItemNO, Class	Summary / CompID / System	Scope / Method / Procedure	Iso No. Comp. Desc. Code Case /Note		Period 1				Period 2				Period 3			
					1	2	3	4	1	2	3	4	1	2	3	4
C-F-2	100865		ISI-13142-37-C	ISI	-	-	-	-	-	-	-	-	-	-	-	-
C5.51	W-14		Pipe-to-Elbow	AUG	-	-	-	-	-	-	-	-	-	-	-	-
2	RHR Discharge A			OWN	-	-	-	-	-	-	-	-	-	-	-	-
				PRE	-	-	-	-	-	-	-	-	-	-	-	-
C-F-2	100866		ISI-13142-37-C	ISI	-	-	-	-	-	-	-	-	-	-	-	-
C5.51	W-15		Elbow-to-Pipe	AUG	-	-	-	-	-	-	-	-	-	-	-	-
2	RHR Discharge A			OWN	-	-	-	-	-	-	-	-	-	-	-	-
				PRE	-	-	-	-	-	-	-	-	-	-	-	-
C-F-2	100867		ISI-13142-37-C	ISI	-	-	-	-	-	-	-	-	-	-	-	-
C5.51	W-16		Pipe-to-Elbow	AUG	-	-	-	-	-	-	-	-	-	-	-	-
2	RHR Discharge A			OWN	-	-	-	-	-	-	-	-	-	-	-	-
				PRE	-	-	-	-	-	-	-	-	-	-	-	-
C-F-2	100868		ISI-13142-37-C	ISI	-	-	-	-	-	-	-	-	-	-	-	-
C5.51	W-17		Elbow-to-Pipe	AUG	-	-	-	-	-	-	-	-	-	-	-	-
2	RHR Discharge A			OWN	-	-	-	-	-	-	-	-	-	-	-	-
				PRE	-	-	-	-	-	-	-	-	-	-	-	-
C-F-2	100869		ISI-13142-37-C	ISI	-	-	-	-	-	-	-	-	-	-	-	-
C5.51	W-18		Pipe-to-Elbow	AUG	-	-	-	-	-	-	-	-	-	-	-	-
2	RHR Discharge A			OWN	-	-	-	-	-	-	-	-	-	-	-	-
				PRE	-	-	-	-	-	-	-	-	-	-	-	-
C-F-2	100870		ISI-13142-37-C	ISI	-	-	-	-	-	-	-	-	-	-	-	-
C5.51	W-19		Elbow-to-Pipe	AUG	-	-	-	-	-	-	-	-	-	-	-	-
2	RHR Discharge A			OWN	-	-	-	-	-	-	-	-	-	-	-	-
				PRE	-	-	-	-	-	-	-	-	-	-	-	-
C-F-2	100871		ISI-13142-37-C	ISI	-	-	-	-	-	-	-	-	-	-	-	-
C5.51	W-20		Pipe-to-Valve	AUG	-	-	-	-	-	-	-	-	-	-	-	-
2	RHR Discharge A			OWN	-	-	-	-	-	-	-	-	-	-	-	-
				PRE	-	-	-	-	-	-	-	-	-	-	-	-
C-F-2	100872		ISI-13142-37-C	ISI	-	-	-	-	-	-	-	-	-	-	-	-
C5.51	W-21		Valve-to-Pipe	AUG	-	-	-	-	-	-	-	-	-	-	-	-
2	RHR Discharge A			OWN	-	-	-	-	-	-	-	-	-	-	-	-
				PRE	-	-	-	-	-	-	-	-	-	-	-	-
C-F-2	100873		ISI-13142-37-C	ISI	-	-	-	-	-	-	-	-	-	-	-	-
C5.51	W-22		Pipe-to-Tee	AUG	-	-	-	-	-	-	-	-	-	-	-	-
2	RHR Discharge A			OWN	-	-	-	-	-	-	-	-	-	-	-	-
				PRE	-	-	-	-	-	-	-	-	-	-	-	-
C-F-2	100874		ISI-13142-37-C	ISI	-	-	-	-	-	-	-	-	-	-	-	-
C5.51	W-23		Tee-to-Pipe	AUG	-	-	-	-	-	-	-	-	-	-	-	-
2	RHR Discharge A			OWN	-	-	-	-	-	-	-	-	-	-	-	-
				PRE	-	-	-	-	-	-	-	-	-	-	-	-

MONTICELLO Nuclear Generating Plant
3rd Interval ISI Plan Rev. 3 June 1, 1992 to May 31, 2002

Category, ItemNO, Class	Summary / CompID / System	Scope / Method / Procedure	Iso No. Comp. Desc. Code Case /Note		Period 1				Period 2				Period 3			
					1	2	3	4	1	2	3	4	1	2	3	4
F-C	100875	ISI/VT/ISI-VT-2.0	ISI-13142-40-A	ISI	-	-	-	-	-	-	-	-	s	-	-	-
F-A,B,C	H- 1		Spring / Clamp	AUG	-	-	-	-	-	-	-	-	-	-	-	-
2	HPCI Water Side Dsch			OWN	-	-	-	-	-	-	-	-	-	-	-	-
				PRE	-	-	-	-	-	-	-	-	-	-	-	-
F-B	100876	ISI/VT/ISI-VT-2.0	ISI-13142-40-A	ISI	-	-	-	-	-	-	-	-	s	-	-	-
F-A,B,C	H- 2		Box Restraint	AUG	-	-	-	-	-	-	-	-	-	-	-	-
2	HPCI Water Side Dsch			OWN	-	-	-	-	-	-	-	-	-	-	-	-
				PRE	-	-	-	-	-	-	-	-	-	-	-	-
F-C	100877	ISI/VT/ISI-VT-2.0	ISI-13142-40-A	ISI	-	-	-	-	c	-	-	-	-	-	-	-
F-A,B,C	H- 3		Rod / Clamp	AUG	-	-	-	-	-	-	-	-	-	-	-	-
2	HPCI Water Side Dsch			OWN	-	-	-	-	-	-	-	-	-	-	-	-
				PRE	-	-	-	-	-	-	-	-	-	-	-	-
F-B	100878	ISI/VT/ISI-VT-2.0	ISI-13142-40-A	ISI	-	-	-	-	c	-	-	-	-	-	-	-
F-A,B,C	H- 4		Strut / Clamp	AUG	-	-	-	-	-	-	-	-	-	-	-	-
2	HPCI Water Side Dsch			OWN	-	-	-	-	-	-	-	-	-	-	-	-
				PRE	-	-	-	-	-	-	-	-	-	-	-	-
F-B	100879	ISI/VT/ISI-VT-2.0	ISI-13142-40-A	ISI	-	-	-	-	c	B	-	-	b	-	-	-
F-A,B,C	H- 5		Snubber / Clamp	AUG	-	-	-	-	-	-	-	-	-	-	-	-
2	HPCI Water Side Dsch			OWN	-	-	-	-	-	-	-	-	-	-	-	-
				PRE	-	-	-	-	-	-	-	-	-	-	-	-
F-C	100880	ISI/VT/ISI-VT-2.0	ISI-13142-40-A	ISI	-	-	-	-	c	-	-	-	-	-	-	-
F-A,B,C	H- 6		Rod / Clamp	AUG	-	-	-	-	-	-	-	-	-	-	-	-
2	HPCI Water Side Dsch			OWN	-	-	-	-	-	-	-	-	-	-	-	-
				PRE	-	-	-	-	-	-	-	-	-	-	-	-
F-C	100881	ISI/VT/ISI-VT-2.0	ISI-13142-40-A	ISI	-	-	-	-	c	-	-	-	-	-	-	-
F-A,B,C	H- 7		Rod / Clamp	AUG	-	-	-	-	-	-	-	-	-	-	-	-
2	HPCI Water Side Dsch			OWN	-	-	-	-	-	-	-	-	-	-	-	-
				PRE	-	-	-	-	-	-	-	-	-	-	-	-
F-B	100882	ISI/VT/ISI-VT-2.0	ISI-13142-40-A	ISI	-	-	-	-	c	-	-	-	-	-	-	-
F-A,B,C	H- 8		Strut / Clamp	AUG	-	-	-	-	-	-	-	-	-	-	-	-
2	HPCI Water Side Dsch			OWN	-	-	-	-	-	-	-	-	-	-	-	-
				PRE	-	-	-	-	-	-	-	-	-	-	-	-
F-B	100883	ISI/VT/ISI-VT-2.0	ISI-13142-40-A	ISI	-	-	-	-	c	-	-	-	-	-	-	-
F-A,B,C	H- 9		Rod / Clamp	AUG	-	-	-	-	-	-	-	-	-	-	-	-
2	HPCI Water Side Dsch			OWN	-	-	-	-	-	-	-	-	-	-	-	-
				PRE	-	-	-	-	-	-	-	-	-	-	-	-
F-B	100884	ISI/VT/ISI-VT-2.0	ISI-13142-40-A	ISI	-	-	-	-	c	-	-	-	-	-	-	-
F-A,B,C	H-10		Rod / Clamp	AUG	-	-	-	-	-	-	-	-	-	-	-	-
2	HPCI Water Side Dsch			OWN	-	-	-	-	-	-	-	-	-	-	-	-
				PRE	-	-	-	-	-	-	-	-	-	-	-	-

MONTICELLO Nuclear Generating Plant
3rd Interval ISI Plan Rev. 3 June 1, 1992 to May 31, 2002

Category, ItemNO, Class	Summary / CompID / System	Scope / Method / Procedure	Iso No. Comp. Desc. Code Case /Note		Period 1				Period 2				Period 3			
					1	2	3	4	1	2	3	4	1	2	3	4
F-B	100885	ISI/VT/ISI-VT-2.0	ISI-13142-40-A	ISI	-	-	-	-	c	-	-	-	-	-	-	-
F-A,B,C	H-11		Rod / Clamp	AUG	-	-	-	-	-	-	-	-	-	-	-	-
2	HPCI Water Side Dsch			OWN	-	-	-	-	-	-	-	-	-	-	-	-
				PRE	-	-	-	-	-	-	-	-	-	-	-	-
F-B	100886	ISI/VT/ISI-VT-2.0	ISI-13142-40-A	ISI	-	-	-	-	c	-	-	-	b	-	-	-
F-A,B,C	H-12		Rod / Clamp	AUG	-	-	-	-	-	-	-	-	-	-	-	-
2	HPCI Water Side Dsch			OWN	-	-	-	-	-	-	-	-	-	-	-	-
				PRE	-	-	-	-	-	-	-	-	-	-	-	-
F-B	100887		ISI-13142-40-A	ISI	-	-	-	-	-	-	-	-	-	-	-	-
F-A,B,C	H-13		Strut / Clamp	AUG	-	-	-	-	-	-	-	-	-	-	-	-
2	HPCI Water Side Dsch			OWN	-	-	-	-	-	-	-	-	-	-	-	-
				PRE	-	-	-	-	-	-	-	-	-	-	-	-
F-B	100888	ISI/VT/ISI-VT-2.0	ISI-13142-40-A	ISI	c	-	-	-	-	-	-	-	-	-	-	-
F-A,B,C	H-14		Seismic Restraint	AUG	-	-	-	-	-	-	-	-	-	-	-	-
2	HPCI Water Side Dsch			OWN	-	-	-	-	-	-	-	-	-	-	-	-
				PRE	-	-	-	-	-	-	-	-	-	-	-	-
C-F-2	100890		ISI-13142-40-A	ISI	-	-	-	-	-	-	-	-	-	-	-	-
C5.51	W- 1		Pump Nozzle/Red.Elb	AUG	-	-	-	-	-	-	-	-	-	-	-	-
2	HPCI Water Side Dsch			OWN	-	-	-	-	-	-	-	-	-	-	-	-
				PRE	-	-	-	-	-	-	-	-	-	-	-	-
C-F-2	100891		ISI-13142-40-A	ISI	-	-	-	-	-	-	-	-	-	-	-	-
C5.51	W- 2		Elbow-to-Pipe	AUG	-	-	-	-	-	-	-	-	-	-	-	-
2	HPCI Water Side Dsch			OWN	-	-	-	-	-	-	-	-	-	-	-	-
				PRE	-	-	-	-	-	-	-	-	-	-	-	-
C-F-2	100892		ISI-13142-40-A	ISI	-	-	-	-	-	-	-	-	-	-	-	-
C5.51	W- 3		Pipe-to-Elbow	AUG	-	-	-	-	-	-	-	-	-	-	-	-
2	HPCI Water Side Dsch			OWN	-	-	-	-	-	-	-	-	-	-	-	-
				PRE	-	-	-	-	-	-	-	-	-	-	-	-
C-F-2	100893		ISI-13142-40-A	ISI	-	-	-	-	-	-	-	-	-	-	-	-
C5.51	W- 4		Elbow-to-Pipe	AUG	-	-	-	-	-	-	-	-	-	-	-	-
2	HPCI Water Side Dsch			OWN	-	-	-	-	-	-	-	-	-	-	-	-
				PRE	-	-	-	-	-	-	-	-	-	-	-	-
C-F-2	100894		ISI-13142-40-A	ISI	-	-	-	-	-	-	-	-	-	-	-	-
C5.51	W- 5		Pipe-to-Elbow	AUG	-	-	-	-	-	-	-	-	-	-	-	-
2	HPCI Water Side Dsch			OWN	-	-	-	-	-	-	-	-	-	-	-	-
				PRE	-	-	-	-	-	-	-	-	-	-	-	-
C-F-2	100895		ISI-13142-40-A	ISI	-	-	-	-	-	-	-	-	-	-	-	-
C5.51	W- 6		Elbow-to-Pipe	AUG	-	-	-	-	-	-	-	-	-	-	-	-
2	HPCI Water Side Dsch			OWN	-	-	-	-	-	-	-	-	-	-	-	-
				PRE	-	-	-	-	-	-	-	-	-	-	-	-

MONTICELLO Nuclear Generating Plant
3rd Interval ISI Plan Rev. 3 June 1, 1992 to May 31, 2002

Category, ItemNO, Class	Summary / CompID / System	Scope / Method / Procedure	Iso No. Comp. Desc. Code Case /Note		Period 1				Period 2				Period 3			
					1	2	3	4	1	2	3	4	1	2	3	4
C-F-2	100896		ISI-13142-40-A	ISI	-	-	-	-	-	-	-	-	-	-	-	-
C5.51	W- 7		Pipe-to-Elbow	AUG	-	-	-	-	-	-	-	-	-	-	-	-
2	HPCI Water Side Dsch			OWN	-	-	-	-	-	-	-	-	-	-	-	-
				PRE	-	-	-	-	-	-	-	-	-	-	-	-
C-F-2	100897	ISI/MT/ISI-MT-1	ISI-13142-40-A	ISI	-	-	-	-	c	-	-	-	-	-	-	-
C5.51	W- 8	ISI/UT/ISI-UT-1	Elbow-to-Pipe	AUG	-	-	-	-	-	-	-	-	-	-	-	-
2	HPCI Water Side Dsch			OWN	-	-	-	-	-	-	-	-	-	-	-	-
				PRE	-	-	-	-	-	-	-	-	-	-	-	-
C-F-2	100898		ISI-13142-40-A	ISI	-	-	-	-	-	-	-	-	-	-	-	-
C5.51	W- 9		Pipe-to-Flange	AUG	-	-	-	-	-	-	-	-	-	-	-	-
2	HPCI Water Side Dsch			OWN	-	-	-	-	-	-	-	-	-	-	-	-
				PRE	-	-	-	-	-	-	-	-	-	-	-	-
C-F-2	100899		ISI-13142-40-A	ISI	-	-	-	-	-	-	-	-	-	-	-	-
C5.51	W-10		Flange-to-Pipe	AUG	-	-	-	-	-	-	-	-	-	-	-	-
2	HPCI Water Side Dsch			OWN	-	-	-	-	-	-	-	-	-	-	-	-
				PRE	-	-	-	-	-	-	-	-	-	-	-	-
C-F-2	100900		ISI-13142-40-A	ISI	-	-	-	-	-	-	-	-	-	-	-	-
C5.51	W-11		Pipe-to-Valve	AUG	-	-	-	-	-	-	-	-	-	-	-	-
2	HPCI Water Side Dsch			OWN	-	-	-	-	-	-	-	-	-	-	-	-
				PRE	-	-	-	-	-	-	-	-	-	-	-	-
C-F-2	100901		ISI-13142-40-A	ISI	-	-	-	-	-	-	-	-	-	-	-	-
C5.51	W-12		Valve-to-Elbow	AUG	-	-	-	-	-	-	-	-	-	-	-	-
2	HPCI Water Side Dsch			OWN	-	-	-	-	-	-	-	-	-	-	-	-
				PRE	-	-	-	-	-	-	-	-	-	-	-	-
C-F-2	100902		ISI-13142-40-A	ISI	-	-	-	-	-	-	-	-	-	-	-	-
C5.51	W-13		Elbow-to-Pipe	AUG	-	-	-	-	-	-	-	-	-	-	-	-
2	HPCI Water Side Dsch			OWN	-	-	-	-	-	-	-	-	-	-	-	-
				PRE	-	-	-	-	-	-	-	-	-	-	-	-
C-F-2	100903		ISI-13142-40-A	ISI	-	-	-	-	-	-	-	-	-	-	-	-
C5.51	W-14		Pipe-to-Tee	AUG	-	-	-	-	-	-	-	-	-	-	-	-
2	HPCI Water Side Dsch			OWN	-	-	-	-	-	-	-	-	-	-	-	-
				PRE	-	-	-	-	-	-	-	-	-	-	-	-
C-F-2	100904		ISI-13142-40-A	ISI	-	-	-	-	-	-	-	-	-	-	-	-
C5.51	W-15		Pipe-to-Valve	AUG	-	-	-	-	-	-	-	-	-	-	-	-
2	HPCI Water Side Dsch			OWN	-	-	-	-	-	-	-	-	-	-	-	-
				PRE	-	-	-	-	-	-	-	-	-	-	-	-
C-F-2	100905		ISI-13142-40-A	ISI	-	-	-	-	-	-	-	-	-	-	-	-
C5.51	W-16		Reducer-to-Pipe	AUG	-	-	-	-	-	-	-	-	-	-	-	-
2	HPCI Water Side Dsch			OWN	-	-	-	-	-	-	-	-	-	-	-	-
				PRE	-	-	-	-	-	-	-	-	-	-	-	-

MONTICELLO Nuclear Generating Plant
3rd Interval ISI Plan Rev. 3 June 1, 1992 to May 31, 2002

Category, ItemNO, Class	Summary / CompID / System	Scope / Method / Procedure	Iso No. Comp. Desc. Code Case /Note		Period 1				Period 2				Period 3			
					1	2	3	4	1	2	3	4	1	2	3	4
C-F-2	100906		ISI-13142-40-A	ISI	-	-	-	-	-	-	-	-	-	-	-	-
C5.51	W-17		Tee-to-Reducer	AUG	-	-	-	-	-	-	-	-	-	-	-	-
2	HPCI Water Side Dsch			OWN	-	-	-	-	-	-	-	-	-	-	-	-
				PRE	-	-	-	-	-	-	-	-	-	-	-	-
C-F-2	100907		ISI-13142-40-A	ISI	-	-	-	-	-	-	-	-	-	-	-	-
C5.51	W-18		Tee-to-Elbow	AUG	-	-	-	-	-	-	-	-	-	-	-	-
2	HPCI Water Side Dsch			OWN	-	-	-	-	-	-	-	-	-	-	-	-
				PRE	-	-	-	-	-	-	-	-	-	-	-	-
C-F-2	100908		ISI-13142-40-A	ISI	-	-	-	-	-	-	-	-	-	-	-	-
C5.51	W-19		Elbow-to-Pipe	AUG	-	-	-	-	-	-	-	-	-	-	-	-
2	HPCI Water Side Dsch			OWN	-	-	-	-	-	-	-	-	-	-	-	-
				PRE	-	-	-	-	-	-	-	-	-	-	-	-
C-F-2	100909		ISI-13142-40-A	ISI	-	-	-	-	-	-	-	-	-	-	-	-
C5.51	W-20		Pipe-to-Pipe	AUG	-	-	-	-	-	-	-	-	-	-	-	-
2	HPCI Water Side Dsch			OWN	-	-	-	-	-	-	-	-	-	-	-	-
				PRE	-	-	-	-	-	-	-	-	-	-	-	-
C-F-2	100910		ISI-13142-40-A	ISI	-	-	-	-	-	-	-	-	-	-	-	-
C5.51	W-21		Pipe-to-Valve	AUG	-	-	-	-	-	-	-	-	-	-	-	-
2	HPCI Water Side Dsch			OWN	-	-	-	-	-	-	-	-	-	-	-	-
				PRE	-	-	-	-	-	-	-	-	-	-	-	-
C-F-2	100911	ISI/MT/ISI-MT-1	ISI-13142-40-A	ISI	C	-	-	-	-	-	-	-	-	-	-	-
C5.51	W-22	ISI/UT/ISI-UT-1	Valve-to-Pipe	AUG	-	-	-	-	-	-	-	-	-	-	-	-
2	HPCI Water Side Dsch			OWN	-	-	-	-	-	-	-	-	-	-	-	-
				PRE	-	-	-	-	-	-	-	-	-	-	-	-
F-C	100912	ISI/VT/ISI-VT-2.0	ISI-13142-40-B	ISI	-	-	-	-	-	-	-	-	S	-	-	-
F-A,B,C	H- 1		Rod / Clamp	AUG	-	-	-	-	-	-	-	-	-	-	-	-
2	HPCI Water Side Dsch			OWN	-	-	-	-	-	-	-	-	-	-	-	-
				PRE	-	-	-	-	-	-	-	-	-	-	-	-
F-B	100913	ISI/VT/ISI-VT-2.0	ISI-13142-40-B	ISI	-	-	-	-	-	-	-	-	S	-	-	-
F-A,B,C	H- 2		Strut / Clamp	AUG	-	-	-	-	-	-	-	-	-	-	-	-
2	HPCI Water Side Dsch			OWN	-	-	-	-	-	-	-	-	-	-	-	-
				PRE	-	-	-	-	-	-	-	-	-	-	-	-
F-B	100914	ISI/VT/ISI-VT-2.0	ISI-13142-40-B	ISI	-	-	-	-	-	-	-	-	S	-	-	-
F-A,B,C	H- 3	ISI/VT/ISI-VT-2.0	Seismic Restraint	AUG	-	-	-	-	-	-	-	-	-	-	-	-
2	HPCI Water Side Dsch			OWN	-	-	-	-	-	-	-	-	-	-	-	-
				PRE	-	-	-	-	-	-	-	-	-	-	-	-
F-C	100915	ISI/VT/ISI-VT-2.0	ISI-13142-40-B	ISI	-	-	-	-	-	-	-	-	S	-	-	-
F-A,B,C	H- 4		Spring / Clamp	AUG	-	-	-	-	-	-	-	-	-	-	-	-
2	HPCI Water Side Dsch			OWN	-	-	-	-	-	-	-	-	-	-	-	-
				PRE	-	-	-	-	-	-	-	-	-	-	-	-

MONTICELLO Nuclear Generating Plant
3rd Interval ISI Plan Rev. 3 June 1, 1992 to May 31, 2002

Category, ItemNO, Class	Summary / CompID / System	Scope / Method / Procedure	Iso No. Comp. Desc. Code Case /Note		Period 1				Period 2				Period 3			
					1	2	3	4	1	2	3	4	1	2	3	4
F-B	100916	ISI/VT/ISI-VT-2.0	ISI-13142-40-B	ISI	-	-	-	-	-	-	-	-	e	-	-	-
F-A,B,C	H- 5		Box Restraint	AUG	-	-	-	-	-	-	-	-	-	-	-	-
2	HPCI Water Side Dsch			OWN	-	-	-	-	-	-	-	-	-	-	-	-
				PRE	-	-	-	-	-	-	-	-	-	-	-	-
C-C	100917	ISI/MT/ISI-MT-1	ISI-13142-40-B	ISI	-	c	-	-	-	-	-	-	-	-	-	-
C3.20	H- 6	ISI/VT/ISI-VT-2.0	Dbl Strut / 4 Lugs	AUG	-	-	-	-	-	-	-	-	-	-	-	-
2	HPCI Water Side Dsch			OWN	-	-	-	-	-	-	-	-	-	-	-	-
				PRE	-	-	-	-	-	-	-	-	-	-	-	-
F-B	100919	ISI/VT/ISI-VT-2.0	ISI-13142-40-B	ISI	-	c	-	-	-	-	-	-	-	-	-	-
F-A,B,C	H- 7		Strut / Clamp	AUG	-	-	-	-	-	-	-	-	-	-	-	-
2	HPCI Water Side Dsch			OWN	-	-	-	-	-	-	-	-	-	-	-	-
				PRE	-	-	-	-	-	-	-	-	-	-	-	-
F-B	100921		ISI-13142-40-B	ISI	-	-	-	-	-	-	-	-	-	-	-	-
F-A,B,C	H- 8		Strut / Clamp / Box	AUG	-	-	-	-	-	-	-	-	-	-	-	-
2	HPCI Water Side Dsch			OWN	-	-	-	-	-	-	-	-	-	-	-	-
				PRE	-	-	-	-	-	-	-	-	-	-	-	-
F-C	100922		ISI-13142-40-B	ISI	-	-	-	-	-	-	-	-	-	-	-	-
F-A,B,C	H- 9		Dbl Spring / Clamp	AUG	-	-	-	-	-	-	-	-	-	-	-	-
2	HPCI Water Side Dsch			OWN	-	-	-	-	-	-	-	-	-	-	-	-
				PRE	-	-	-	-	-	-	-	-	-	-	-	-
F-C	100923		ISI-13142-40-B	ISI	-	-	-	-	-	-	-	-	-	-	-	-
F-A,B,C	H-10		Variable Spring	AUG	-	-	-	-	-	-	-	-	-	-	-	-
2	HPCI Water Side Dsch			OWN	-	-	-	-	-	-	-	-	-	-	-	-
				PRE	-	-	-	-	-	-	-	-	-	-	-	-
F-B	100924	ISI/VT/ISI-VT-2.0	ISI-13142-40-B	ISI	-	-	-	-	-	-	-	-	-	s	-	-
F-A,B,C	H-11		Strut / Clamp	AUG	-	-	-	-	-	-	-	-	-	-	-	-
2	HPCI Water Side Dsch			OWN	-	-	-	-	-	-	-	-	-	-	-	-
				PRE	-	-	-	-	-	-	-	-	-	-	-	-
F-B	100925	ISI/VT/ISI-VT-2.0	ISI-13142-40-B	ISI	-	-	-	-	-	-	-	-	-	s	-	-
F-A,B,C	H-12		Strut / Clamp	AUG	-	-	-	-	-	-	-	-	-	-	-	-
2	HPCI Water Side Dsch			OWN	-	-	-	-	-	-	-	-	-	-	-	-
				PRE	-	-	-	-	-	-	-	-	-	-	-	-
C-F-2	100926		ISI-13142-40-B	ISI	-	-	-	-	-	-	-	-	-	-	-	-
C5.51	W- 1		Pipe-to-Elbow	AUG	-	-	-	-	-	-	-	-	-	-	-	-
2	HPCI Water Side Dsch			OWN	-	-	-	-	-	-	-	-	-	-	-	-
				PRE	-	-	-	-	-	-	-	-	-	-	-	-
C-F-2	100927		ISI-13142-40-B	ISI	-	-	-	-	-	-	-	-	-	-	-	-
C5.51	W- 2		Elbow-to-Pipe	AUG	-	-	-	-	-	-	-	-	-	-	-	-
2	HPCI Water Side Dsch			OWN	-	-	-	-	-	-	-	-	-	-	-	-
				PRE	-	-	-	-	-	-	-	-	-	-	-	-

MONTICELLO Nuclear Generating Plant
3rd Interval ISI Plan Rev. 3 June 1, 1992 to May 31, 2002

Category, ItemNO, Class	Summary / CompID / System	Scope / Method / Procedure	Iso No. Comp. Desc. Code Case /Note		Period 1				Period 2				Period 3			
					1	2	3	4	1	2	3	4	1	2	3	4
C-F-2	100928		ISI-13142-40-B	ISI	-	-	-	-	-	-	-	-	-	-	-	-
C5.51	W- 3		Pipe-to-Elbow	AUG	-	-	-	-	-	-	-	-	-	-	-	-
2	HPCI Water Side Dsch			OWN	-	-	-	-	-	-	-	-	-	-	-	-
				PRE	-	-	-	-	-	-	-	-	-	-	-	-
C-F-2	100929		ISI-13142-40-B	ISI	-	-	-	-	-	-	-	-	-	-	-	-
C5.51	W- 4		Elbow-to-Pipe	AUG	-	-	-	-	-	-	-	-	-	-	-	-
2	HPCI Water Side Dsch			OWN	-	-	-	-	-	-	-	-	-	-	-	-
				PRE	-	-	-	-	-	-	-	-	-	-	-	-
C-F-2	100930		ISI-13142-40-B	ISI	-	-	-	-	-	-	-	-	-	-	-	-
C5.51	W- 5		Pipe-to-Elbow	AUG	-	-	-	-	-	-	-	-	-	-	-	-
2	HPCI Water Side Dsch			OWN	-	-	-	-	-	-	-	-	-	-	-	-
				PRE	-	-	-	-	-	-	-	-	-	-	-	-
C-F-2	100931		ISI-13142-40-B	ISI	-	-	-	-	-	-	-	-	-	-	-	-
C5.51	W- 6		Elbow-to-Pipe	AUG	-	-	-	-	-	-	-	-	-	-	-	-
2	HPCI Water Side Dsch			OWN	-	-	-	-	-	-	-	-	-	-	-	-
				PRE	-	-	-	-	-	-	-	-	-	-	-	-
C-F-2	100932		ISI-13142-40-B	ISI	-	-	-	-	-	-	-	-	-	-	-	-
C5.51	W- 7		Pipe-to-Elbow	AUG	-	-	-	-	-	-	-	-	-	-	-	-
2	HPCI Water Side Dsch			OWN	-	-	-	-	-	-	-	-	-	-	-	-
				PRE	-	-	-	-	-	-	-	-	-	-	-	-
C-F-2	100933		ISI-13142-40-B	ISI	-	-	-	-	-	-	-	-	-	-	-	-
C5.51	W- 8		Elbow-to-Pipe	AUG	-	-	-	-	-	-	-	-	-	-	-	-
2	HPCI Water Side Dsch			OWN	-	-	-	-	-	-	-	-	-	-	-	-
				PRE	-	-	-	-	-	-	-	-	-	-	-	-
C-F-2	100934		ISI-13142-40-B	ISI	-	-	-	-	-	-	-	-	-	-	-	-
C5.51	W- 9		Elbow-to-Pipe	AUG	-	-	-	-	-	-	-	-	-	-	-	-
2	HPCI Water Side Dsch			OWN	-	-	-	-	-	-	-	-	-	-	-	-
				PRE	-	-	-	-	-	-	-	-	-	-	-	-
C-F-2	100935		ISI-13142-40-B	ISI	-	-	-	-	-	-	-	-	-	-	-	-
C5.51	W-10		Pipe-to-Elbow	AUG	-	-	-	-	-	-	-	-	-	-	-	-
2	HPCI Water Side Dsch			OWN	-	-	-	-	-	-	-	-	-	-	-	-
				PRE	-	-	-	-	-	-	-	-	-	-	-	-
C-F-2	100936	ISI/MT/ISI-MT-1	ISI-13142-40-B	ISI	-	c	-	-	-	-	-	-	-	-	-	-
C5.51	W-11	ISI/UT/ISI-UT-1	Pipe-to-Elbow	AUG	-	-	-	-	-	-	-	-	-	-	-	-
2	HPCI Water Side Dsch			OWN	-	-	-	-	-	-	-	-	-	-	-	-
				PRE	-	-	-	-	-	-	-	-	-	-	-	-
C-F-2	100937		ISI-13142-40-B	ISI	-	-	-	-	-	-	-	-	-	-	-	-
C5.51	W-12		Elbow-to-Pipe	AUG	-	-	-	-	-	-	-	-	-	-	-	-
2	HPCI Water Side Dsch			OWN	-	-	-	-	-	-	-	-	-	-	-	-
				PRE	-	-	-	-	-	-	-	-	-	-	-	-

MONTICELLO Nuclear Generating Plant
3rd Interval ISI Plan Rev. 3 June 1, 1992 to May 31, 2002

Category, ItemNO, Class	Summary / CompID / System	Scope / Method / Procedure	Iso No. Comp. Desc. Code Case /Note		Period 1				Period 2				Period 3			
					1	2	3	4	1	2	3	4	1	2	3	4
C-F-2	100938		ISI-13142-40-B	ISI	-	-	-	-	-	-	-	-	-	-	-	-
C5.51	W-13		Pipe-to-Elbow	AUG	-	-	-	-	-	-	-	-	-	-	-	-
2	HPCI Water Side Dsch			OWN	-	-	-	-	-	-	-	-	-	-	-	-
				PRE	-	-	-	-	-	-	-	-	-	-	-	-
C-F-2	100939		ISI-13142-40-B	ISI	-	-	-	-	-	-	-	-	-	-	-	-
C5.51	W-14		Elbow-to-Pipe	AUG	-	-	-	-	-	-	-	-	-	-	-	-
2	HPCI Water Side Dsch			OWN	-	-	-	-	-	-	-	-	-	-	-	-
				PRE	-	-	-	-	-	-	-	-	-	-	-	-
C-F-2	100940		ISI-13142-40-B	ISI	-	-	-	-	-	-	-	-	-	-	-	-
C5.51	W-15		Pipe-to-Elbow	AUG	-	-	-	-	-	-	-	-	-	-	-	-
2	HPCI Water Side Dsch			OWN	-	-	-	-	-	-	-	-	-	-	-	-
				PRE	-	-	-	-	-	-	-	-	-	-	-	-
C-F-2	100941		ISI-13142-40-B	ISI	-	-	-	-	-	-	-	-	-	-	-	-
C5.51	W-16		Elbow-to-Pipe	AUG	-	-	-	-	-	-	-	-	-	-	-	-
2	HPCI Water Side Dsch			OWN	-	-	-	-	-	-	-	-	-	-	-	-
				PRE	-	-	-	-	-	-	-	-	-	-	-	-
C-F-2	100942		ISI-13142-40-B	ISI	-	-	-	-	-	-	-	-	-	-	-	-
C5.51	W-17		Pipe-to-Elbow	AUG	-	-	-	-	-	-	-	-	-	-	-	-
2	HPCI Water Side Dsch			OWN	-	-	-	-	-	-	-	-	-	-	-	-
				PRE	-	-	-	-	-	-	-	-	-	-	-	-
C-F-2	100943		ISI-13142-40-B	ISI	-	-	-	-	-	-	-	-	-	-	-	-
C5.51	W-18		Elbow-to-Valve	AUG	-	-	-	-	-	-	-	-	-	-	-	-
2	HPCI Water Side Dsch			OWN	-	-	-	-	-	-	-	-	-	-	-	-
				PRE	-	-	-	-	-	-	-	-	-	-	-	-
C-F-2	100944		ISI-13142-40-B	ISI	-	-	-	-	-	-	-	-	-	-	-	-
C5.51	W-19		Valve-to-Pipe	AUG	-	-	-	-	-	-	-	-	-	-	-	-
2	HPCI Water Side Dsch			OWN	-	-	-	-	-	-	-	-	-	-	-	-
				PRE	-	-	-	-	-	-	-	-	-	-	-	-
C-F-2	100945		ISI-13142-40-B	ISI	-	-	-	-	-	-	-	-	-	-	-	-
C5.51	W-20		Pipe-to-Elbow	AUG	-	-	-	-	-	-	-	-	-	-	-	-
2	HPCI Water Side Dsch			OWN	-	-	-	-	-	-	-	-	-	-	-	-
				PRE	-	-	-	-	-	-	-	-	-	-	-	-
C-F-2	100946		ISI-13142-40-B	ISI	-	-	-	-	-	-	-	-	-	-	-	-
C5.51	W-21		Elbow-to-Pipe	AUG	-	-	-	-	-	-	-	-	-	-	-	-
2	HPCI Water Side Dsch			OWN	-	-	-	-	-	-	-	-	-	-	-	-
				PRE	-	-	-	-	-	-	-	-	-	-	-	-
C-F-2	100947		ISI-13142-40-B	ISI	-	-	-	-	-	-	-	-	-	-	-	-
C5.51	W-22		Pipe-to-Elbow	AUG	-	-	-	-	-	-	-	-	-	-	-	-
2	HPCI Water Side Dsch			OWN	-	-	-	-	-	-	-	-	-	-	-	-
				PRE	-	-	-	-	-	-	-	-	-	-	-	-

MONTICELLO Nuclear Generating Plant
3rd Interval ISI Plan Rev. 3 June 1, 1992 to May 31, 2002

Category, ItemNO, Class	Summary / CompID / System	Scope / Method / Procedure	Iso No. Comp. Desc. Code Case /Note		Period 1				Period 2				Period 3			
					1	2	3	4	1	2	3	4	1	2	3	4
C-F-2	100948		ISI-13142-40-B	ISI	-	-	-	-	-	-	-	-	-	-	-	-
C5.51	W-23		Elbow-to-Pipe	AUG	-	-	-	-	-	-	-	-	-	-	-	-
2	HPCI Water Side Dsch			OWN	-	-	-	-	-	-	-	-	-	-	-	-
				PRE	-	-	-	-	-	-	-	-	-	-	-	-
C-F-2	100949	ISI/UT/ISI-UT-1	ISI-13142-40-B	ISI	-	c	-	-	B	-	-	-	b	b	-	-
C5.51	W-24	ISI/MT/ISI-MT-1	Pipe-to-Tee	AUG	-	-	-	-	-	-	-	-	-	-	-	-
2	HPCI Water Side Dsch			OWN	-	-	-	-	-	-	-	-	-	-	-	-
				PRE	-	-	-	-	-	-	-	-	-	-	-	-
C-F-2	100950	ISI/MT/ISI-MT-1	ISI-13142-41-A	ISI	-	-	-	-	c	-	-	-	-	-	-	-
C5.51	W- 1	ISI/UT/ISI-UT-1	Penetration-to-Pipe	AUG	-	-	-	-	-	-	-	-	-	-	-	-
2	RCIC Water Suction			OWN	-	-	-	-	-	-	-	-	-	-	-	-
				PRE	-	-	-	-	-	-	-	-	-	-	-	-
C-F-2	100951		ISI-13142-41-A	ISI	-	-	-	-	-	-	-	-	-	-	-	-
CX.XX	W- 2		Pipe-to-Elbow	AUG	-	-	-	-	-	-	-	-	-	-	-	-
2	RCIC Water Suction			OWN	-	-	-	-	-	-	-	-	-	-	-	-
				PRE	-	-	-	-	-	-	-	-	-	-	-	-
C-F-2	100952		ISI-13142-41-A	ISI	-	-	-	-	-	-	-	-	-	-	-	-
CX.XX	W- 3		Elbow-to-Pipe	AUG	-	-	-	-	-	-	-	-	-	-	-	-
2	RCIC Water Suction			OWN	-	-	-	-	-	-	-	-	-	-	-	-
				PRE	-	-	-	-	-	-	-	-	-	-	-	-
C-F-2	100953		ISI-13142-41-A	ISI	-	-	-	-	-	-	-	-	-	-	-	-
CX.XX	W- 4		Pipe-to-Elbow	AUG	-	-	-	-	-	-	-	-	-	-	-	-
2	RCIC Water Suction			OWN	-	-	-	-	-	-	-	-	-	-	-	-
				PRE	-	-	-	-	-	-	-	-	-	-	-	-
C-F-2	100954		ISI-13142-41-A	ISI	-	-	-	-	-	-	-	-	-	-	-	-
CX.XX	W- 5		Elbow-to-Pipe	AUG	-	-	-	-	-	-	-	-	-	-	-	-
2	RCIC Water Suction			OWN	-	-	-	-	-	-	-	-	-	-	-	-
				PRE	-	-	-	-	-	-	-	-	-	-	-	-
C-F-2	100955		ISI-13142-41-A	ISI	-	-	-	-	-	-	-	-	-	-	-	-
CX.XX	W- 6		Pipe-to-Elbow	AUG	-	-	-	-	-	-	-	-	-	-	-	-
2	RCIC Water Suction			OWN	-	-	-	-	-	-	-	-	-	-	-	-
				PRE	-	-	-	-	-	-	-	-	-	-	-	-
C-F-2	100956		ISI-13142-41-A	ISI	-	-	-	-	-	-	-	-	-	-	-	-
CX.XX	W- 7		Elbow-to-Valve	AUG	-	-	-	-	-	-	-	-	-	-	-	-
2	RCIC Water Suction			OWN	-	-	-	-	-	-	-	-	-	-	-	-
				PRE	-	-	-	-	-	-	-	-	-	-	-	-
C-F-2	100957		ISI-13142-41-A	ISI	-	-	-	-	-	-	-	-	-	-	-	-
CX.XX	W- 8		Valve-to-Pipe	AUG	-	-	-	-	-	-	-	-	-	-	-	-
2	RCIC Water Suction			OWN	-	-	-	-	-	-	-	-	-	-	-	-
				PRE	-	-	-	-	-	-	-	-	-	-	-	-

MONTICELLO Nuclear Generating Plant
3rd Interval ISI Plan Rev. 3 June 1, 1992 to May 31, 2002

Category, ItemNO, Class	Summary / CompID / System	Scope / Method / Procedure	Iso No. Comp. Desc. Code Case /Note		Period 1				Period 2				Period 3			
					1	2	3	4	1	2	3	4	1	2	3	4
C-F-2	100958		ISI-13142-41-A	ISI	-	-	-	-	-	-	-	-	-	-	-	-
CX.XX	W- 9		Pipe-to-Valve	AUG	-	-	-	-	-	-	-	-	-	-	-	-
2	RCIC Water Suction			OWN	-	-	-	-	-	-	-	-	-	-	-	-
				PRE	-	-	-	-	-	-	-	-	-	-	-	-
C-F-2	100959		ISI-13142-41-A	ISI	-	-	-	-	-	-	-	-	-	-	-	-
CX.XX	W-10		Valve-to-Pipe	AUG	-	-	-	-	-	-	-	-	-	-	-	-
2	RCIC Water Suction			OWN	-	-	-	-	-	-	-	-	-	-	-	-
				PRE	-	-	-	-	-	-	-	-	-	-	-	-
C-F-2	100960		ISI-13142-41-A	ISI	-	-	-	-	-	-	-	-	-	-	-	-
CX.XX	W-11		Pipe-to-Valve	AUG	-	-	-	-	-	-	-	-	-	-	-	-
2	RCIC Water Suction			OWN	-	-	-	-	-	-	-	-	-	-	-	-
				PRE	-	-	-	-	-	-	-	-	-	-	-	-
C-F-2	100961		ISI-13142-41-A	ISI	-	-	-	-	-	-	-	-	-	-	-	-
CX.XX	W-12		Valve-to-Pipe	AUG	-	-	-	-	-	-	-	-	-	-	-	-
2	RCIC Water Suction			OWN	-	-	-	-	-	-	-	-	-	-	-	-
				PRE	-	-	-	-	-	-	-	-	-	-	-	-
C-F-2	100962		ISI-13142-41-A	ISI	-	-	-	-	-	-	-	-	-	-	-	-
CX.XX	W-13		Pipe-to-Tee	AUG	-	-	-	-	-	-	-	-	-	-	-	-
2	RCIC Water Suction			OWN	-	-	-	-	-	-	-	-	-	-	-	-
				PRE	-	-	-	-	-	-	-	-	-	-	-	-
C-F-2	100963		ISI-13142-41-A	ISI	-	-	-	-	-	-	-	-	-	-	-	-
CX.XX	W-14		Valve-to-Pipe	AUG	-	-	-	-	-	-	-	-	-	-	-	-
2	RCIC Water Suction			OWN	-	-	-	-	-	-	-	-	-	-	-	-
				PRE	-	-	-	-	-	-	-	-	-	-	-	-
C-F-2	100964		ISI-13142-41-A	ISI	-	-	-	-	-	-	-	-	-	-	-	-
CX.XX	W-15		Pipe-to-Valve	AUG	-	-	-	-	-	-	-	-	-	-	-	-
2	RCIC Water Suction			OWN	-	-	-	-	-	-	-	-	-	-	-	-
				PRE	-	-	-	-	-	-	-	-	-	-	-	-
C-F-2	100965		ISI-13142-41-A	ISI	-	-	-	-	-	-	-	-	-	-	-	-
CX.XX	W-16		Valve-to-Tee	AUG	-	-	-	-	-	-	-	-	-	-	-	-
2	RCIC Water Suction			OWN	-	-	-	-	-	-	-	-	-	-	-	-
				PRE	-	-	-	-	-	-	-	-	-	-	-	-
C-F-2	100966		ISI-13142-41-A	ISI	-	-	-	-	-	-	-	-	-	-	-	-
CX.XX	W-17		Tee-to-Valve	AUG	-	-	-	-	-	-	-	-	-	-	-	-
2	RCIC Water Suction			OWN	-	-	-	-	-	-	-	-	-	-	-	-
				PRE	-	-	-	-	-	-	-	-	-	-	-	-
C-F-2	100967		ISI-13142-41-A	ISI	-	-	-	-	-	-	-	-	-	-	-	-
CX.XX	W-18		Valve-to-Pipe	AUG	-	-	-	-	-	-	-	-	-	-	-	-
2	RCIC Water Suction			OWN	-	-	-	-	-	-	-	-	-	-	-	-
				PRE	-	-	-	-	-	-	-	-	-	-	-	-

MONTICELLO Nuclear Generating Plant
3rd Interval ISI Plan Rev. 3 June 1, 1992 to May 31, 2002

Category, ItemNO, Class	Summary / CompID / System	Scope / Method / Procedure	Iso No. Comp. Desc. Code Case /Note		Period 1				Period 2				Period 3			
					1	2	3	4	1	2	3	4	1	2	3	4
C-F-2	100968		ISI-13142-41-A	ISI	-	-	-	-	-	-	-	-	-	-	-	-
CX.XX	W-19		Valve-to-Pipe	AUG	-	-	-	-	-	-	-	-	-	-	-	-
2	RCIC Water Suction			OWN	-	-	-	-	-	-	-	-	-	-	-	-
				PRE	-	-	-	-	-	-	-	-	-	-	-	-
C-F-2	100969		ISI-13142-41-A	ISI	-	-	-	-	-	-	-	-	-	-	-	-
CX.XX	W-20		Elbow-to-Flange	AUG	-	-	-	-	-	-	-	-	-	-	-	-
2	RCIC Water Suction			OWN	-	-	-	-	-	-	-	-	-	-	-	-
				PRE	-	-	-	-	-	-	-	-	-	-	-	-
C-F-2	100970		ISI-13142-41-A	ISI	-	-	-	-	-	-	-	-	-	-	-	-
CX.XX	W-21		Flange-to-Pipe	AUG	-	-	-	-	-	-	-	-	-	-	-	-
2	RCIC Water Suction			OWN	-	-	-	-	-	-	-	-	-	-	-	-
				PRE	-	-	-	-	-	-	-	-	-	-	-	-
C-F-2	100971		ISI-13142-41-A	ISI	-	-	-	-	-	-	-	-	-	-	-	-
CX.XX	W-22		Pipe-to-Flange	AUG	-	-	-	-	-	-	-	-	-	-	-	-
2	RCIC Water Suction			OWN	-	-	-	-	-	-	-	-	-	-	-	-
				PRE	-	-	-	-	-	-	-	-	-	-	-	-
C-F-2	100972		ISI-13142-41-A	ISI	-	-	-	-	-	-	-	-	-	-	-	-
CX.XX	W-23		Flange-to-Pump	AUG	-	-	-	-	-	-	-	-	-	-	-	-
2	RCIC Water Suction			OWN	-	-	-	-	-	-	-	-	-	-	-	-
				PRE	-	-	-	-	-	-	-	-	-	-	-	-
B-G-2	100973	ISI/VT/ISI-VT-1.0	ISI-13142-42-A	ISI	-	-	-	-	-	c	-	-	-	-	-	-
B7.70	B- 1		Valve Bolts	AUG	-	-	-	-	-	-	-	-	-	-	-	-
1	HPCI Steam			OWN	-	-	-	-	-	-	-	-	-	-	-	-
				PRE	-	-	-	-	-	-	-	-	-	-	-	-
B-G-2	100974	ISI/VT/ISI-VT-1.0	ISI-13142-42-A	ISI	c	-	-	-	-	-	-	-	-	-	-	-
B7.70	B- 2		Valve Bolts	AUG	-	-	-	-	-	-	-	-	-	-	-	-
1	HPCI Steam			OWN	-	-	-	-	-	-	-	-	-	-	-	-
				PRE	-	-	-	-	-	-	-	-	-	-	-	-
F-C	100975	ISI/VT/ISI-VT-2.0	ISI-13142-42-A	ISI	-	-	-	-	-	c	-	-	-	-	-	-
F-A,B,C	H- 1		Variable Spring	AUG	-	-	-	-	-	-	-	-	-	-	-	-
1	HPCI Steam			OWN	-	-	-	-	-	-	-	-	-	-	-	-
				PRE	-	-	-	-	-	-	-	-	-	-	-	-
F-C	100977	ISI/VT/ISI-VT-2.0	ISI-13142-42-A	ISI	c	-	-	-	B	-	-	-	-	-	-	-
F-A,B,C	H- 2		Spring / Clamp	AUG	-	-	-	-	-	-	-	-	-	-	-	-
2	HPCI Steam			OWN	-	-	-	-	-	-	-	-	-	-	-	-
				PRE	-	-	-	-	-	-	-	-	-	-	-	-
C-C	100978	ISI/MT/ISI-MT-1	ISI-13142-42-A	ISI	-	-	-	-	c	-	-	-	-	-	-	-
C3.20	H- 3	ISI/VT/ISI-VT-2.0	Double Spring/4 Lugs	AUG	-	-	-	-	-	-	-	-	-	-	-	-
2	HPCI Steam			OWN	-	-	-	-	-	-	-	-	-	-	-	-
				PRE	-	-	-	-	-	-	-	-	-	-	-	-

MONTICELLO Nuclear Generating Plant
3rd Interval ISI Plan Rev. 3 June 1, 1992 to May 31, 2002

Category, ItemNO, Class	Summary / CompID / System	Scope / Method / Procedure	Iso No. Comp. Desc. Code Case /Note		Period 1				Period 2				Period 3			
					1	2	3	4	1	2	3	4	1	2	3	4
F-B	100980	ISI/VT/ISI-VT-2.0	ISI-13142-42-A	ISI	-	-	-	-	c	-	-	-	-	-	-	-
F-A,B,C	H- 4		Dbl Strut/Dbl Clamp	AUG	-	-	-	-	-	-	-	-	-	-	-	-
2	HPCI Steam			OWN	-	-	-	-	-	-	-	-	-	-	-	-
				PRE	-	-	-	-	-	-	-	-	-	-	-	-
F-C	100981	ISI/VT/ISI-VT-2.0	ISI-13142-42-A	ISI	c	-	-	-	B	-	-	-	-	-	-	-
F-A,B,C	H- 5		Spring / Clamp	AUG	-	-	-	-	-	-	-	-	-	-	-	-
2	HPCI Steam			OWN	-	-	-	-	-	-	-	-	-	-	-	-
				PRE	-	-	-	-	-	-	-	-	-	-	-	-
F-C	100982	ISI/VT/ISI-VT-2.0	ISI-13142-42-A	ISI	c	-	-	-	B	-	-	-	-	-	-	-
F-A,B,C	H- 6		Spring / Clamp	AUG	-	-	-	-	-	-	-	-	-	-	-	-
2	HPCI Steam			OWN	-	-	-	-	-	-	-	-	-	-	-	-
				PRE	-	-	-	-	-	-	-	-	-	-	-	-
F-C	100983	ISI/VT/ISI-VT-2.0	ISI-13142-42-A	ISI	c	-	-	-	B	-	-	-	-	-	-	-
F-A,B,C	H- 7		Spring / Clamp	AUG	-	-	-	-	-	-	-	-	-	-	-	-
2	HPCI Steam			OWN	-	-	-	-	-	-	-	-	-	-	-	-
				PRE	-	-	-	-	-	-	-	-	-	-	-	-
F-C	100984	ISI/VT/ISI-VT-2.0	ISI-13142-42-A	ISI	-	-	-	-	c	-	-	-	-	-	-	-
F-A,B,C	H- 8		Spring / Clamp	AUG	-	-	-	-	-	-	-	-	-	-	-	-
2	HPCI Steam			OWN	-	-	-	-	-	-	-	-	-	-	-	-
				PRE	-	-	-	-	-	-	-	-	-	-	-	-
F-B	100985	ISI/VT/ISI-VT-2.0	ISI-13142-42-A	ISI	-	-	-	-	c	-	-	-	-	-	-	-
F-A,B,C	H- 9		Strut / Clamp	AUG	-	-	-	-	-	-	-	-	-	-	-	-
2	HPCI Steam			OWN	-	-	-	-	-	-	-	-	-	-	-	-
				PRE	-	-	-	-	-	-	-	-	-	-	-	-
F-B	100986	ISI/VT/ISI-VT-2.0	ISI-13142-42-A	ISI	-	-	-	-	c	-	-	-	-	-	-	-
F-A,B,C	H-10		Rod / Clamp	AUG	-	-	-	-	-	-	-	-	-	-	-	-
2	HPCI Steam			OWN	-	-	-	-	-	-	-	-	-	-	-	-
				PRE	-	-	-	-	-	-	-	-	-	-	-	-
F-B	100987	ISI/VT/ISI-VT-2.0	ISI-13142-42-A	ISI	c	B	-	-	B	B	-	-	b	-	-	-
F-A,B,C	H-11		Snubber / Clamp	AUG	-	-	-	-	-	-	-	-	-	-	-	-
2	HPCI Steam			OWN	-	-	-	-	-	-	-	-	-	-	-	-
				PRE	-	-	-	-	-	-	-	-	-	-	-	-
F-B	100988	ISI/VT/ISI-VT-2.0	ISI-13142-42-A	ISI	-	-	-	-	-	-	-	-	s	-	-	-
F-A,B,C	H-12		Box Restraint	AUG	-	-	-	-	-	-	-	-	-	-	-	-
2	HPCI Steam			OWN	-	-	-	-	-	-	-	-	-	-	-	-
				PRE	-	-	-	-	-	-	-	-	-	-	-	-
F-C	100989	ISI/VT/ISI-VT-2.0	ISI-13142-42-A	ISI	-	-	-	-	c	-	-	-	b	-	-	-
F-A,B,C	H-13		Spring / Clamp	AUG	-	-	-	-	-	-	-	-	-	-	-	-
2	HPCI Steam			OWN	-	-	-	-	-	-	-	-	-	-	-	-
				PRE	-	-	-	-	-	-	-	-	-	-	-	-

MONTICELLO Nuclear Generating Plant
3rd Interval ISI Plan Rev. 3 June 1, 1992 to May 31, 2002

Category, ItemNO, Class	Summary / CompID / System	Scope / Method / Procedure	Iso No. Comp. Desc. Code Case /Note		Period 1				Period 2				Period 3			
					1	2	3	4	1	2	3	4	1	2	3	4
F-C	100990	ISI/VT/ISI-VT-2.0	ISI-13142-42-A	ISI	-	-	-	-	c	-	-	-	b	-	-	-
F-A,B,C	H-14		Spring / Clamp	AUG	-	-	-	-	-	-	-	-	-	-	-	-
2	HPCI Steam			OWN	-	-	-	-	-	-	-	-	-	-	-	-
				PRE	-	-	-	-	-	-	-	-	-	-	-	-
B-M-2	100991		ISI-13142-42-A	ISI	-	-	-	-	-	-	-	-	-	-	-	-
B12.50	V- 1		Valve Int Surfaces	AUG	-	-	-	-	-	-	-	-	-	-	-	-
1	HPCI Steam		NOTE: HH, RELIEF 4	OWN	-	-	-	-	-	-	-	-	-	-	-	-
				PRE	-	-	-	-	-	-	-	-	-	-	-	-
B-M-2	100992	ISI/VT/ISI-VT-3.0	ISI-13142-42-A	ISI	c	-	-	-	-	-	-	-	-	-	-	-
B12.50	V- 2		Valve Int Surfaces	AUG	-	-	-	-	-	-	-	-	-	-	-	-
1	HPCI Steam		NOTE: HH, RELIEF 4	OWN	-	-	-	-	-	-	-	-	-	-	-	-
				PRE	-	-	-	-	-	-	-	-	-	-	-	-
B-J	100993		ISI-13142-42-A	ISI	-	-	-	-	-	-	-	-	-	-	-	-
B9.11	W- 1		Sweepolet-to-Elbow	AUG	-	-	-	-	-	-	-	-	-	-	-	-
1	HPCI Steam			OWN	-	-	-	-	-	-	-	-	-	-	-	-
				PRE	-	-	-	-	-	-	-	-	-	-	-	-
B-J	100994	ISI/MT/ISI-MT-1	ISI-13142-42-A	ISI	-	-	-	-	-	c	-	-	-	-	-	-
B9.11	W- 2	ISI/UT/ISI-UT-1	Elbow-to-Pipe	AUG	-	-	-	-	-	-	-	-	-	-	-	-
1	HPCI Steam			OWN	-	-	-	-	-	-	-	-	-	-	-	-
				PRE	-	-	-	-	-	-	-	-	-	-	-	-
B-J	100995	ISI/PT/ISI-PT-1	ISI-13142-42-A	ISI	-	-	-	-	-	c	-	-	-	-	-	-
B9.11	W- 3	ISI/UT/ISI-UT-16	Pipe-to-Venturi	AUG	-	-	-	-	-	-	-	-	-	-	-	-
1	HPCI Steam		NOTE: CC	OWN	-	-	-	-	-	-	-	-	-	-	-	-
				PRE	-	-	-	-	-	-	-	-	-	-	-	-
B-J	100996	ISI/PT/ISI-PT-1	ISI-13142-42-A	ISI	-	-	-	-	-	c	-	-	-	-	-	-
B9.11	W- 4	ISI/UT/ISI-UT-16	Venturi-to-Pipe	AUG	-	-	-	-	-	-	-	-	-	-	-	-
1	HPCI Steam		NOTE: CC	OWN	-	-	-	-	-	-	-	-	-	-	-	-
				PRE	-	-	-	-	-	-	-	-	-	-	-	-
B-J	100997		ISI-13142-42-A	ISI	-	-	-	-	-	-	-	-	-	-	-	-
B9.11	W- 5		Pipe-to-Valve	AUG	-	-	-	-	-	-	-	-	-	-	-	-
1	HPCI Steam			OWN	-	-	-	-	-	-	-	-	-	-	-	-
				PRE	-	-	-	-	-	-	-	-	-	-	-	-
B-J	100998		ISI-13142-42-A	ISI	-	-	-	-	-	-	-	-	-	-	-	-
B9.11	W- 6		Valve-to-Pipe	AUG	-	-	-	-	-	-	-	-	-	-	-	-
1	HPCI Steam			OWN	-	-	-	-	-	-	-	-	-	-	-	-
				PRE	-	-	-	-	-	-	-	-	-	-	-	-
B-J	100999		ISI-13142-42-A	ISI	-	-	-	-	-	-	-	-	-	-	-	-
B9.11	W- 7		Pipe-to-Elbow	AUG	-	-	-	-	-	-	-	-	-	-	-	-
1	HPCI Steam			OWN	-	-	-	-	-	-	-	-	-	-	-	-
				PRE	-	-	-	-	-	-	-	-	-	-	-	-

MONTICELLO Nuclear Generating Plant
3rd Interval ISI Plan Rev. 3 June 1, 1992 to May 31, 2002

Category, ItemNO, Class	Summary / CompID / System	Scope / Method / Procedure	Iso No. Comp. Desc. Code Case /Note		Period 1				Period 2				Period 3			
					1	2	3	4	1	2	3	4	1	2	3	4
B-J	101000	ISI/MT/ISI-MT-1	ISI-13142-42-A	ISI	-	-	-	-	-	c	-	-	-	-	-	-
B9.11	W- 8	ISI/UT/ISI-UT-1	Elbow-to-Pipe	AUG	-	-	-	-	-	-	-	-	-	-	-	-
1	HPCI Steam			OWN	-	-	-	-	-	-	-	-	-	-	-	-
				PRE	-	-	-	-	-	-	-	-	-	-	-	-
B-J	101001		ISI-13142-42-A	ISI	-	-	-	-	-	-	-	-	-	-	-	-
B9.11	W- 9		Pipe-to-Elbow	AUG	-	-	-	-	-	-	-	-	-	-	-	-
1	HPCI Steam			OWN	-	-	-	-	-	-	-	-	-	-	-	-
				PRE	-	-	-	-	-	-	-	-	-	-	-	-
B-J	101002		ISI-13142-42-A	ISI	-	-	-	-	-	-	-	-	-	-	-	-
B9.11	W-10		Elbow-to-Pipe	AUG	-	-	-	-	-	-	-	-	-	-	-	-
1	HPCI Steam			OWN	-	-	-	-	-	-	-	-	-	-	-	-
				PRE	-	-	-	-	-	-	-	-	-	-	-	-
B-J	101003		ISI-13142-42-A	ISI	-	-	-	-	-	-	-	-	-	-	-	-
B9.11	W-11		Pipe-to-Pipe	AUG	-	-	-	-	-	-	-	-	-	-	-	-
1	HPCI Steam			OWN	-	-	-	-	-	-	-	-	-	-	-	-
				PRE	-	-	-	-	-	-	-	-	-	-	-	-
B-J	101004		ISI-13142-42-A	ISI	-	-	-	-	-	-	-	-	-	-	-	-
B9.11	W-12		Pipe-to-Elbow	AUG	-	-	-	-	-	-	-	-	-	-	-	-
1	HPCI Steam			OWN	-	-	-	-	-	-	-	-	-	-	-	-
				PRE	-	-	-	-	-	-	-	-	-	-	-	-
B-J	101005		ISI-13142-42-A	ISI	-	-	-	-	-	-	-	-	-	-	-	-
B9.11	W-13		Elbow-to-Pipe	AUG	-	-	-	-	-	-	-	-	-	-	-	-
1	HPCI Steam			OWN	-	-	-	-	-	-	-	-	-	-	-	-
				PRE	-	-	-	-	-	-	-	-	-	-	-	-
B-J	101006		ISI-13142-42-A	ISI	-	-	-	-	-	-	-	-	-	-	-	-
B9.11	W-14		Pipe-to-Pipe	AUG	-	-	-	-	-	-	-	-	-	-	-	-
1	HPCI Steam		NOTE: DD	OWN	-	-	-	-	-	-	-	-	-	-	-	-
				PRE	-	-	-	-	-	-	-	-	-	-	-	-
B-J	101007		ISI-13142-42-A	ISI	-	-	-	-	-	-	-	-	-	-	-	-
B9.11	W-15		Pipe-to-Pipe	AUG	-	-	-	-	-	-	-	-	-	-	-	-
1	HPCI Steam			OWN	-	-	-	-	-	-	-	-	-	-	-	-
				PRE	-	-	-	-	-	-	-	-	-	-	-	-
B-J	101008	ISI/MT/ISI-MT-1	ISI-13142-42-A	ISI	-	-	-	-	-	-	-	-	s	-	-	-
B9.11	W-16	ISI/UT/ISI-UT-1	Pipe-to-Pipe	AUG	-	-	-	-	-	-	-	-	-	-	-	-
1	HPCI Steam		NOTE: MM	OWN	-	-	-	-	-	-	-	-	-	-	-	-
				PRE	-	-	-	-	-	-	-	-	-	-	-	-
B-J	101009	ISI/UT/ISI-UT-1	ISI-13142-42-A	ISI	-	c	-	-	-	-	-	-	b	-	-	-
B9.11	W-17	ISI/MT/ISI-MT-1	Pipe-to-Valve	AUG	-	-	-	-	-	-	-	-	-	-	-	-
1	HPCI Steam			OWN	-	-	-	-	-	-	-	-	-	-	-	-
				PRE	-	-	-	-	-	-	-	-	-	-	-	-

MONTICELLO Nuclear Generating Plant
3rd Interval ISI Plan Rev. 3 June 1, 1992 to May 31, 2002

Category, ItemNO, Class	Summary / CompID / System	Scope / Method / Procedure	Iso No. Comp. Desc. Code Case /Note		Period 1				Period 2				Period 3			
					1	2	3	4	1	2	3	4	1	2	3	4
C-F-2	101010	ISI/MT/ISI-MT-1	ISI-13142-42-A	ISI	c	-	-	-	-	-	-	-	b	-	-	-
C5.51	W-18	ISI/UT/ISI-UT-1	Valve-to-Tee	AUG	-	-	-	-	-	-	-	-	-	-	-	-
2	HPCI Steam			OWN	-	-	-	-	-	-	-	-	-	-	-	-
				PRE	-	-	-	-	-	-	-	-	-	-	-	-
C-F-2	101011		ISI-13142-42-A	ISI	-	-	-	-	-	-	-	-	-	-	-	-
C5.51	W-19		Tee-to-Pipe	AUG	-	-	-	-	-	-	-	-	-	-	-	-
2	HPCI Steam			OWN	-	-	-	-	-	-	-	-	-	-	-	-
				PRE	-	-	-	-	-	-	-	-	-	-	-	-
C-F-2	101012		ISI-13142-42-A	ISI	-	-	-	-	-	-	-	-	-	-	-	-
C5.51	W-20		Pipe-to-Cap	AUG	-	-	-	-	-	-	-	-	-	-	-	-
2	HPCI Steam			OWN	-	-	-	-	-	-	-	-	-	-	-	-
				PRE	-	-	-	-	-	-	-	-	-	-	-	-
C-F-2	101013		ISI-13142-42-A	ISI	-	-	-	-	-	-	-	-	-	-	-	-
C5.51	W-21		Tee-to-Pipe	AUG	-	-	-	-	-	-	-	-	-	-	-	-
2	HPCI Steam			OWN	-	-	-	-	-	-	-	-	-	-	-	-
				PRE	-	-	-	-	-	-	-	-	-	-	-	-
C-F-2	101014		ISI-13142-42-A	ISI	-	-	-	-	-	-	-	-	-	-	-	-
C5.51	W-22		Pipe-to-Pipe	AUG	-	-	-	-	-	-	-	-	-	-	-	-
2	HPCI Steam			OWN	-	-	-	-	-	-	-	-	-	-	-	-
				PRE	-	-	-	-	-	-	-	-	-	-	-	-
C-F-2	101015		ISI-13142-42-A	ISI	-	-	-	-	-	-	-	-	-	-	-	-
C5.51	W-23		Pipe-to-Elbow	AUG	-	-	-	-	-	-	-	-	-	-	-	-
2	HPCI Steam			OWN	-	-	-	-	-	-	-	-	-	-	-	-
				PRE	-	-	-	-	-	-	-	-	-	-	-	-
C-F-2	101016		ISI-13142-42-A	ISI	-	-	-	-	-	-	-	-	-	-	-	-
C5.51	W-24		Elbow-to-Pipe	AUG	-	-	-	-	-	-	-	-	-	-	-	-
2	HPCI Steam			OWN	-	-	-	-	-	-	-	-	-	-	-	-
				PRE	-	-	-	-	-	-	-	-	-	-	-	-
C-F-2	101017		ISI-13142-42-A	ISI	-	-	-	-	-	-	-	-	-	-	-	-
C5.51	W-25		Pipe-to-Elbow	AUG	-	-	-	-	-	-	-	-	-	-	-	-
2	HPCI Steam			OWN	-	-	-	-	-	-	-	-	-	-	-	-
				PRE	-	-	-	-	-	-	-	-	-	-	-	-
C-F-2	101018		ISI-13142-42-A	ISI	-	-	-	-	-	-	-	-	-	-	-	-
C5.51	W-26		Elbow-to-Pipe	AUG	-	-	-	-	-	-	-	-	-	-	-	-
2	HPCI Steam			OWN	-	-	-	-	-	-	-	-	-	-	-	-
				PRE	-	-	-	-	-	-	-	-	-	-	-	-
C-F-2	101019		ISI-13142-42-A	ISI	-	-	-	-	-	-	-	-	-	-	-	-
C5.51	W-27		Pipe-to-Pipe	AUG	-	-	-	-	-	-	-	-	-	-	-	-
2	HPCI Steam			OWN	-	-	-	-	-	-	-	-	-	-	-	-
				PRE	-	-	-	-	-	-	-	-	-	-	-	-

MONTICELLO Nuclear Generating Plant
3rd Interval ISI Plan Rev. 3 June 1, 1992 to May 31, 2002

Category, ItemNO, Class	Summary / CompID / System	Scope / Method / Procedure	Iso No. Comp. Desc. Code Case /Note		Period 1				Period 2				Period 3			
					1	2	3	4	1	2	3	4	1	2	3	4
C-F-2	101020		ISI-13142-42-A	ISI	-	-	-	-	-	-	-	-	-	-	-	-
C5.51	W-28		Pipe-to-Elbow	AUG	-	-	-	-	-	-	-	-	-	-	-	-
2	HPCI Steam			OWN	-	-	-	-	-	-	-	-	-	-	-	-
				PRE	-	-	-	-	-	-	-	-	-	-	-	-
C-F-2	101021		ISI-13142-42-A	ISI	-	-	-	-	-	-	-	-	-	-	-	-
C5.51	W-29		Elbow-to-Pipe	AUG	-	-	-	-	-	-	-	-	-	-	-	-
2	HPCI Steam			OWN	-	-	-	-	-	-	-	-	-	-	-	-
				PRE	-	-	-	-	-	-	-	-	-	-	-	-
C-F-2	101022		ISI-13142-42-A	ISI	-	-	-	-	-	-	-	-	-	-	-	-
C5.51	W-30		Pipe-to-Pipe	AUG	-	-	-	-	-	-	-	-	-	-	-	-
2	HPCI Steam			OWN	-	-	-	-	-	-	-	-	-	-	-	-
				PRE	-	-	-	-	-	-	-	-	-	-	-	-
C-F-2	101023		ISI-13142-42-A	ISI	-	-	-	-	-	-	-	-	-	-	-	-
C5.51	W-31		Pipe-to-Elbow	AUG	-	-	-	-	-	-	-	-	-	-	-	-
2	HPCI Steam			OWN	-	-	-	-	-	-	-	-	-	-	-	-
				PRE	-	-	-	-	-	-	-	-	-	-	-	-
C-F-2	101024	ISI/MT/ISI-MT-1	ISI-13142-42-A	ISI	-	-	-	-	c	-	-	-	-	-	-	-
C5.51	W-32	ISI/UT/ISI-UT-1	Elbow-to-Pipe	AUG	-	-	-	-	-	-	-	-	-	-	-	-
2	HPCI Steam			OWN	-	-	-	-	-	-	-	-	-	-	-	-
				PRE	-	-	-	-	-	-	-	-	-	-	-	-
C-F-2	101025		ISI-13142-42-A	ISI	-	-	-	-	-	-	-	-	-	-	-	-
C5.51	W-33		Pipe-to-Elbow	AUG	-	-	-	-	-	-	-	-	-	-	-	-
2	HPCI Steam			OWN	-	-	-	-	-	-	-	-	-	-	-	-
				PRE	-	-	-	-	-	-	-	-	-	-	-	-
C-F-2	101026		ISI-13142-42-A	ISI	-	-	-	-	-	-	-	-	-	-	-	-
C5.51	W-34		Elbow-to-Pipe	AUG	-	-	-	-	-	-	-	-	-	-	-	-
2	HPCI Steam			OWN	-	-	-	-	-	-	-	-	-	-	-	-
				PRE	-	-	-	-	-	-	-	-	-	-	-	-
C-F-2	101027		ISI-13142-42-A	ISI	-	-	-	-	-	-	-	-	-	-	-	-
C5.51	W-35		Pipe-to-Pipe	AUG	-	-	-	-	-	-	-	-	-	-	-	-
2	HPCI Steam			OWN	-	-	-	-	-	-	-	-	-	-	-	-
				PRE	-	-	-	-	-	-	-	-	-	-	-	-
C-F-2	101028	ISI/UT/ISI-UT-1	ISI-13142-42-A	ISI	-	-	-	-	c	-	-	-	-	-	-	-
C5.51	W-36	ISI/MT/ISI-MT-1	Pipe-to-Elbow	AUG	-	-	-	-	-	-	-	-	-	-	-	-
2	HPCI Steam			OWN	-	-	-	-	-	-	-	-	-	-	-	-
				PRE	-	-	-	-	-	-	-	-	-	-	-	-
C-F-2	101029		ISI-13142-42-A	ISI	-	-	-	-	-	-	-	-	-	-	-	-
C5.51	W-37		Elbow-to-Pipe	AUG	-	-	-	-	-	-	-	-	-	-	-	-
2	HPCI Steam			OWN	-	-	-	-	-	-	-	-	-	-	-	-
				PRE	-	-	-	-	-	-	-	-	-	-	-	-

MONTICELLO Nuclear Generating Plant
3rd Interval ISI Plan Rev. 3 June 1, 1992 to May 31, 2002

Category, ItemNO, Class	Summary / CompID / System	Scope / Method / Procedure	Iso No. Comp. Desc. Code Case /Note		Period 1				Period 2				Period 3			
					1	2	3	4	1	2	3	4	1	2	3	4
C-F-2	101030		ISI-13142-42-A	ISI	-	-	-	-	-	-	-	-	-	-	-	-
C5.51	W-38		Pipe-to-Elbow	AUG	-	-	-	-	-	-	-	-	-	-	-	-
2	HPCI Steam			OWN	-	-	-	-	-	-	-	-	-	-	-	-
				PRE	-	-	-	-	-	-	-	-	-	-	-	-
C-F-2	101031		ISI-13142-42-A	ISI	-	-	-	-	-	-	-	-	-	-	-	-
C5.51	W-39		Elbow-to-Pipe	AUG	-	-	-	-	-	-	-	-	-	-	-	-
2	HPCI Steam			OWN	-	-	-	-	-	-	-	-	-	-	-	-
				PRE	-	-	-	-	-	-	-	-	-	-	-	-
C-F-2	101032		ISI-13142-42-A	ISI	-	-	-	-	-	-	-	-	-	-	-	-
C5.51	W-40		Pipe-to-Elbow	AUG	-	-	-	-	-	-	-	-	-	-	-	-
2	HPCI Steam			OWN	-	-	-	-	-	-	-	-	-	-	-	-
				PRE	-	-	-	-	-	-	-	-	-	-	-	-
C-F-2	101033		ISI-13142-42-A	ISI	-	-	-	-	-	-	-	-	-	-	-	-
C5.51	W-41		Elbow-to-Tee	AUG	-	-	-	-	-	-	-	-	-	-	-	-
2	HPCI Steam			OWN	-	-	-	-	-	-	-	-	-	-	-	-
				PRE	-	-	-	-	-	-	-	-	-	-	-	-
C-F-2	101034		ISI-13142-42-A	ISI	-	-	-	-	-	-	-	-	-	-	-	-
C5.51	W-42		Tee-to-Pipe	AUG	-	-	-	-	-	-	-	-	-	-	-	-
2	HPCI Steam			OWN	-	-	-	-	-	-	-	-	-	-	-	-
				PRE	-	-	-	-	-	-	-	-	-	-	-	-
C-F-2	101035		ISI-13142-42-A	ISI	-	-	-	-	-	-	-	-	-	-	-	-
C5.51	W-43		Pipe-to-Cap	AUG	-	-	-	-	-	-	-	-	-	-	-	-
2	HPCI Steam			OWN	-	-	-	-	-	-	-	-	-	-	-	-
				PRE	-	-	-	-	-	-	-	-	-	-	-	-
C-F-2	101036		ISI-13142-42-A	ISI	-	-	-	-	-	-	-	-	-	-	-	-
C5.51	W-44		Tee-to-Pipe	AUG	-	-	-	-	-	-	-	-	-	-	-	-
2	HPCI Steam			OWN	-	-	-	-	-	-	-	-	-	-	-	-
				PRE	-	-	-	-	-	-	-	-	-	-	-	-
C-F-2	101037	ISI/UT/ISI-UT-1	ISI-13142-42-A	ISI	c	-	-	-	-	-	-	-	-	-	-	-
C5.51	W-45	ISI/MT/ISI-MT-1	Pipe-to-Valve	AUG	-	-	-	-	-	-	-	-	-	-	-	-
2	HPCI Steam			OWN	-	-	-	-	-	-	-	-	-	-	-	-
				PRE	-	-	-	-	-	-	-	-	-	-	-	-
C-F-2	101038	ISI/UT/ISI-UT-1	ISI-13142-42-A	ISI	c	-	-	-	-	-	-	-	-	-	-	-
C5.51	W-46	ISI/MT/ISI-MT-1	Valve-to-Pipe	AUG	-	-	-	-	-	-	-	-	-	-	-	-
2	HPCI Steam			OWN	-	-	-	-	-	-	-	-	-	-	-	-
				PRE	-	-	-	-	-	-	-	-	-	-	-	-
C-F-2	101039		ISI-13142-42-A	ISI	-	-	-	-	-	-	-	-	-	-	-	-
C5.51	W-47		Pipe-to-Red Elbow	AUG	-	-	-	-	-	-	-	-	-	-	-	-
2	HPCI Steam			OWN	-	-	-	-	-	-	-	-	-	-	-	-
				PRE	-	-	-	-	-	-	-	-	-	-	-	-

MONTICELLO Nuclear Generating Plant
3rd Interval ISI Plan Rev. 3 June 1, 1992 to May 31, 2002

Category, ItemNO, Class	Summary / CompID / System	Scope / Method / Procedure	Iso No. Comp. Desc. Code Case /Note		Period 1				Period 2				Period 3			
					1	2	3	4	1	2	3	4	1	2	3	4
C-F-2	101040		ISI-13142-42-A	ISI	-	-	-	-	-	-	-	-	-	-	-	-
C5.51	W-48		Red Elbow-to-Flange	AUG	-	-	-	-	-	-	-	-	-	-	-	-
2	HPCI Steam			OWN	-	-	-	-	-	-	-	-	-	-	-	-
				PRE	-	-	-	-	-	-	-	-	-	-	-	-
F-C	101041	ISI/VT/ISI-VT-2.0	ISI-13142-43-A	ISI	-	-	-	-	-	c	-	-	-	-	-	-
F-A,B,C	H- 1		Variable Spring	AUG	-	-	-	-	-	-	-	-	-	-	-	-
1	RCIC Steam			OWN	-	-	-	-	-	-	-	-	-	-	-	-
				PRE	-	-	-	-	-	-	-	-	-	-	-	-
F-B	101042	ISI/UT/ISI-VT-2.0	ISI-13142-43-A	ISI	-	-	-	-	-	c	-	-	-	-	-	-
F-A,B,C	H- 2		Strut / Clamp	AUG	-	-	-	-	-	-	-	-	-	-	-	-
1	RCIC Steam			OWN	-	-	-	-	-	-	-	-	-	-	-	-
				PRE	-	-	-	-	-	-	-	-	-	-	-	-
B-J	101043		ISI-13142-43-A	ISI	-	-	-	-	-	-	-	-	-	-	-	-
B9.21	W- 1		Sweepolet-to-Elbow	AUG	-	-	-	-	-	-	-	-	-	-	-	-
1	RCIC Steam			OWN	-	-	-	-	-	-	-	-	-	-	-	-
				PRE	-	-	-	-	-	-	-	-	-	-	-	-
B-J	101044		ISI-13142-43-A	ISI	-	-	-	-	-	-	-	-	-	-	-	-
B9.21	W- 2		Elbow-to-Pipe	AUG	-	-	-	-	-	-	-	-	-	-	-	-
1	RCIC Steam			OWN	-	-	-	-	-	-	-	-	-	-	-	-
				PRE	-	-	-	-	-	-	-	-	-	-	-	-
B-J	101045		ISI-13142-43-A	ISI	-	-	-	-	-	-	-	-	-	-	-	-
B9.21	W- 3		Pipe-to-Valve	AUG	-	-	-	-	-	-	-	-	-	-	-	-
1	RCIC Steam			OWN	-	-	-	-	-	-	-	-	-	-	-	-
				PRE	-	-	-	-	-	-	-	-	-	-	-	-
B-J	101046		ISI-13142-43-A	ISI	-	-	-	-	-	-	-	-	-	-	-	-
B9.21	W- 4		Valve-to-Elbow	AUG	-	-	-	-	-	-	-	-	-	-	-	-
1	RCIC Steam			OWN	-	-	-	-	-	-	-	-	-	-	-	-
				PRE	-	-	-	-	-	-	-	-	-	-	-	-
B-J	101047		ISI-13142-43-A	ISI	-	-	-	-	-	-	-	-	-	-	-	-
B9.21	W- 5		Elbow-to-Pipe	AUG	-	-	-	-	-	-	-	-	-	-	-	-
1	RCIC Steam			OWN	-	-	-	-	-	-	-	-	-	-	-	-
				PRE	-	-	-	-	-	-	-	-	-	-	-	-
B-J	101048		ISI-13142-43-A	ISI	-	-	-	-	-	-	-	-	-	-	-	-
B9.21	W- 6		Pipe-to-Elbow	AUG	-	-	-	-	-	-	-	-	-	-	-	-
1	RCIC Steam			OWN	-	-	-	-	-	-	-	-	-	-	-	-
				PRE	-	-	-	-	-	-	-	-	-	-	-	-
B-J	101049	ISI/MT/ISI-MT-1	ISI-13142-43-A	ISI	-	-	-	-	-	c	-	-	-	-	-	-
B9.21	W- 7		Elbow-to-Pipe	AUG	-	-	-	-	-	-	-	-	-	-	-	-
1	RCIC Steam			OWN	-	-	-	-	-	-	-	-	-	-	-	-
				PRE	-	-	-	-	-	-	-	-	-	-	-	-

MONTICELLO Nuclear Generating Plant
3rd Interval ISI Plan Rev. 3 June 1, 1992 to May 31, 2002

Category, ItemNO, Class	Summary / CompID / System	Scope / Method / Procedure	Iso No. Comp. Desc. Code Case /Note		Period 1				Period 2				Period 3			
					1	2	3	4	1	2	3	4	1	2	3	4
B-J	101050		ISI-13142-43-A	ISI	-	-	-	-	-	-	-	-	-	-	-	-
B9.21	W- 8		Pipe-to-Pipe	AUG	-	-	-	-	-	-	-	-	-	-	-	-
1	RCIC Steam			OWN	-	-	-	-	-	-	-	-	-	-	-	-
				PRE	-	-	-	-	-	-	-	-	-	-	-	-
B-J	101051	ISI/MT/ISI-MT-1	ISI-13142-43-A	ISI	c	-	-	-	-	-	-	-	-	-	-	-
B9.21	W- 9		Pipe-to-Elbow	AUG	-	-	-	-	-	-	-	-	-	-	-	-
1	RCIC Steam			OWN	-	-	-	-	-	-	-	-	-	-	-	-
				PRE	-	-	-	-	-	-	-	-	-	-	-	-
B-J	101052	ISI/MT/ISI-MT-1	ISI-13142-43-A	ISI	c	-	-	-	-	-	-	-	-	-	-	-
B9.21	W-10		Elbow-to-Pipe	AUG	-	-	-	-	-	-	-	-	-	-	-	-
1	RCIC Steam			OWN	-	-	-	-	-	-	-	-	-	-	-	-
				PRE	-	-	-	-	-	-	-	-	-	-	-	-
B-J	101053		ISI-13142-43-A	ISI	-	-	-	-	-	-	-	-	-	-	-	-
B9.21	W-11		Pipe-to-Pipe	AUG	-	-	-	-	-	-	-	-	-	-	-	-
1	RCIC Steam			OWN	-	-	-	-	-	-	-	-	-	-	-	-
				PRE	-	-	-	-	-	-	-	-	-	-	-	-
B-J	101054		ISI-13142-43-A	ISI	-	-	-	-	-	-	-	-	-	-	-	-
B9.21	W-12		Pipe-to-Pipe	AUG	-	-	-	-	-	-	-	-	-	-	-	-
1	RCIC Steam		NOTE: DD	OWN	-	-	-	-	-	-	-	-	-	-	-	-
				PRE	-	-	-	-	-	-	-	-	-	-	-	-
B-J	101055	ISI/MT/ISI-MT-1	ISI-13142-43-A	ISI	-	-	-	-	-	-	-	-	s	-	-	-
B9.21	W-13	ISI/UT/ISI-UT-1	Pipe-to-Pipe	AUG	-	-	-	-	-	-	-	-	-	-	-	-
1	RCIC Steam		NOTE: MM	OWN	-	-	-	-	-	-	-	-	-	-	-	-
				PRE	-	-	-	-	-	-	-	-	-	-	-	-
B-J	101056	ISI/MT/ISI-MT-1	ISI-13142-43-A	ISI	-	c	-	-	-	-	-	-	-	-	-	-
B9.21	W-14		Pipe-to-Valve	AUG	-	-	-	-	-	-	-	-	-	-	-	-
1	RCIC Steam		NOTE: MM	OWN	-	-	-	-	-	-	-	-	-	-	-	-
				PRE	-	-	-	-	-	-	-	-	-	-	-	-
C-F-2	101057		ISI-13142-48-A	ISI	-	-	-	-	-	-	-	-	-	-	-	-
CX.XX	W- 1		Pipe-to-Elbow	AUG	-	-	-	-	-	-	-	-	-	-	-	-
2	RHR Service Water			OWN	-	-	-	-	-	-	-	-	-	-	-	-
				PRE	-	-	-	-	-	-	-	-	-	-	-	-
C-F-2	101058		ISI-13142-48-A	ISI	-	-	-	-	-	-	-	-	-	-	-	-
CX.XX	W- 2		Elbow-to-Pipe	AUG	-	-	-	-	-	-	-	-	-	-	-	-
2	RHR Service Water			OWN	-	-	-	-	-	-	-	-	-	-	-	-
				PRE	-	-	-	-	-	-	-	-	-	-	-	-
C-F-2	101059		ISI-13142-48-A	ISI	-	-	-	-	-	-	-	-	-	-	-	-
CX.XX	W- 3		Pipe-to-Elbow	AUG	-	-	-	-	-	-	-	-	-	-	-	-
2	RHR Service Water			OWN	-	-	-	-	-	-	-	-	-	-	-	-
				PRE	-	-	-	-	-	-	-	-	-	-	-	-

MONTICELLO Nuclear Generating Plant
3rd Interval ISI Plan Rev. 3 June 1, 1992 to May 31, 2002

Category, ItemNO, Class	Summary / CompID / System	Scope / Method / Procedure	Iso No. Comp. Desc. Code Case /Note		Period 1				Period 2				Period 3			
					1	2	3	4	1	2	3	4	1	2	3	4
C-F-2	101060		ISI-13142-48-A	ISI	-	-	-	-	-	-	-	-	-	-	-	-
CX.XX	W- 4		Elbow-to-Pipe	AUG	-	-	-	-	-	-	-	-	-	-	-	-
2	RHR Service Water			OWN	-	-	-	-	-	-	-	-	-	-	-	-
				PRE	-	-	-	-	-	-	-	-	-	-	-	-
C-F-2	101061		ISI-13142-48-A	ISI	-	-	-	-	-	-	-	-	-	-	-	-
CX.XX	W- 5		Pipe-to-Elbow	AUG	-	-	-	-	-	-	-	-	-	-	-	-
2	RHR Service Water			OWN	-	-	-	-	-	-	-	-	-	-	-	-
				PRE	-	-	-	-	-	-	-	-	-	-	-	-
C-F-2	101062		ISI-13142-48-A	ISI	-	-	-	-	-	-	-	-	-	-	-	-
CX.XX	W- 6		Elbow-to-Pipe	AUG	-	-	-	-	-	-	-	-	-	-	-	-
2	RHR Service Water			OWN	-	-	-	-	-	-	-	-	-	-	-	-
				PRE	-	-	-	-	-	-	-	-	-	-	-	-
C-F-2	101063		ISI-13142-48-A	ISI	-	-	-	-	-	-	-	-	-	-	-	-
CX.XX	W- 7		Pipe-to-Elbow	AUG	-	-	-	-	-	-	-	-	-	-	-	-
2	RHR Service Water			OWN	-	-	-	-	-	-	-	-	-	-	-	-
				PRE	-	-	-	-	-	-	-	-	-	-	-	-
C-F-2	101064		ISI-13142-48-A	ISI	-	-	-	-	-	-	-	-	-	-	-	-
CX.XX	W- 8		Elbow-to-Pipe	AUG	-	-	-	-	-	-	-	-	-	-	-	-
2	RHR Service Water			OWN	-	-	-	-	-	-	-	-	-	-	-	-
				PRE	-	-	-	-	-	-	-	-	-	-	-	-
C-F-2	101065		ISI-13142-48-A	ISI	-	-	-	-	-	-	-	-	-	-	-	-
CX.XX	W- 9		Pipe-to-Elbow	AUG	-	-	-	-	-	-	-	-	-	-	-	-
2	RHR Service Water			OWN	-	-	-	-	-	-	-	-	-	-	-	-
				PRE	-	-	-	-	-	-	-	-	-	-	-	-
C-F-2	101066		ISI-13142-48-A	ISI	-	-	-	-	-	-	-	-	-	-	-	-
CX.XX	W-10		Elbow-to-Pipe	AUG	-	-	-	-	-	-	-	-	-	-	-	-
2	RHR Service Water			OWN	-	-	-	-	-	-	-	-	-	-	-	-
				PRE	-	-	-	-	-	-	-	-	-	-	-	-
C-F-2	101067		ISI-13142-48-A	ISI	-	-	-	-	-	-	-	-	-	-	-	-
CX.XX	W-11		Pipe-to-Elbow	AUG	-	-	-	-	-	-	-	-	-	-	-	-
2	RHR Service Water			OWN	-	-	-	-	-	-	-	-	-	-	-	-
				PRE	-	-	-	-	-	-	-	-	-	-	-	-
C-F-2	101068		ISI-13142-48-A	ISI	-	-	-	-	-	-	-	-	-	-	-	-
CX.XX	W-12		Elbow-to-Pipe	AUG	-	-	-	-	-	-	-	-	-	-	-	-
2	RHR Service Water			OWN	-	-	-	-	-	-	-	-	-	-	-	-
				PRE	-	-	-	-	-	-	-	-	-	-	-	-
C-F-2	101069		ISI-13142-48-A	ISI	-	-	-	-	-	-	-	-	-	-	-	-
CX.XX	W-13		Pipe-to-Pipe	AUG	-	-	-	-	-	-	-	-	-	-	-	-
2	RHR Service Water			OWN	-	-	-	-	-	-	-	-	-	-	-	-
				PRE	-	-	-	-	-	-	-	-	-	-	-	-

MONTICELLO Nuclear Generating Plant
3rd Interval ISI Plan Rev. 3 June 1, 1992 to May 31, 2002

Category, ItemNO, Class	Summary / CompID / System	Scope / Method / Procedure	Iso No. Comp. Desc. Code Case /Note		Period 1				Period 2				Period 3			
					1	2	3	4	1	2	3	4	1	2	3	4
C-F-2	101070		ISI-13142-48-A	ISI	-	-	-	-	-	-	-	-	-	-	-	-
CX.XX	W-14		Pipe-to-Elbow	AUG	-	-	-	-	-	-	-	-	-	-	-	-
2	RHR Service Water			OWN	-	-	-	-	-	-	-	-	-	-	-	-
				PRE	-	-	-	-	-	-	-	-	-	-	-	-
C-F-2	101071		ISI-13142-48-A	ISI	-	-	-	-	-	-	-	-	-	-	-	-
CX.XX	W-15		Elbow-to-Pipe	AUG	-	-	-	-	-	-	-	-	-	-	-	-
2	RHR Service Water			OWN	-	-	-	-	-	-	-	-	-	-	-	-
				PRE	-	-	-	-	-	-	-	-	-	-	-	-
C-F-2	101072		ISI-13142-48-A	ISI	-	-	-	-	-	-	-	-	-	-	-	-
CX.XX	W-16		Pipe-to-Elbow	AUG	-	-	-	-	-	-	-	-	-	-	-	-
2	RHR Service Water			OWN	-	-	-	-	-	-	-	-	-	-	-	-
				PRE	-	-	-	-	-	-	-	-	-	-	-	-
C-F-2	101073		ISI-13142-48-A	ISI	-	-	-	-	-	-	-	-	-	-	-	-
CX.XX	W-17		Elbow-to-Pipe	AUG	-	-	-	-	-	-	-	-	-	-	-	-
2	RHR Service Water			OWN	-	-	-	-	-	-	-	-	-	-	-	-
				PRE	-	-	-	-	-	-	-	-	-	-	-	-
C-F-2	101074		ISI-13142-48-A	ISI	-	-	-	-	-	-	-	-	-	-	-	-
CX.XX	W-18		Pipe-to-Elbow	AUG	-	-	-	-	-	-	-	-	-	-	-	-
2	RHR Service Water			OWN	-	-	-	-	-	-	-	-	-	-	-	-
				PRE	-	-	-	-	-	-	-	-	-	-	-	-
C-F-2	101075		ISI-13142-48-A	ISI	-	-	-	-	-	-	-	-	-	-	-	-
CX.XX	W-19		Elbow-to-Pipe	AUG	-	-	-	-	-	-	-	-	-	-	-	-
2	RHR Service Water			OWN	-	-	-	-	-	-	-	-	-	-	-	-
				PRE	-	-	-	-	-	-	-	-	-	-	-	-
C-F-2	101076		ISI-13142-48-A	ISI	-	-	-	-	-	-	-	-	-	-	-	-
CX.XX	W-20		Pipe-to-Pipe	AUG	-	-	-	-	-	-	-	-	-	-	-	-
2	RHR Service Water			OWN	-	-	-	-	-	-	-	-	-	-	-	-
				PRE	-	-	-	-	-	-	-	-	-	-	-	-
C-F-2	101077		ISI-13142-48-A	ISI	-	-	-	-	-	-	-	-	-	-	-	-
CX.XX	W-21		Pipe-to-Pipe	AUG	-	-	-	-	-	-	-	-	-	-	-	-
2	RHR Service Water			OWN	-	-	-	-	-	-	-	-	-	-	-	-
				PRE	-	-	-	-	-	-	-	-	-	-	-	-
C-F-2	101078		ISI-13142-48-A	ISI	-	-	-	-	-	-	-	-	-	-	-	-
CX.XX	W-22		Pipe-to-Pipe	AUG	-	-	-	-	-	-	-	-	-	-	-	-
2	RHR Service Water			OWN	-	-	-	-	-	-	-	-	-	-	-	-
				PRE	-	-	-	-	-	-	-	-	-	-	-	-
C-F-2	101079		ISI-13142-48-A	ISI	-	-	-	-	-	-	-	-	-	-	-	-
CX.XX	W-23		Pipe-to-Elbow	AUG	-	-	-	-	-	-	-	-	-	-	-	-
2	RHR Service Water			OWN	-	-	-	-	-	-	-	-	-	-	-	-
				PRE	-	-	-	-	-	-	-	-	-	-	-	-

MONTICELLO Nuclear Generating Plant
3rd Interval ISI Plan Rev. 3 June 1, 1992 to May 31, 2002

Category, ItemNO, Class	Summary / CompID / System	Scope / Method / Procedure	Iso No. Comp. Desc. Code Case /Note		Period 1				Period 2				Period 3			
					1	2	3	4	1	2	3	4	1	2	3	4
C-F-2	101080		ISI-13142-48-A	ISI	-	-	-	-	-	-	-	-	-	-	-	-
CX.XX	W-24		Elbow-to-Pipe	AUG	-	-	-	-	-	-	-	-	-	-	-	-
2	RHR Service Water			OWN	-	-	-	-	-	-	-	-	-	-	-	-
				PRE	-	-	-	-	-	-	-	-	-	-	-	-
C-F-2	101081		ISI-13142-48-A	ISI	-	-	-	-	-	-	-	-	-	-	-	-
CX.XX	W-25		Pipe-to-Pipe	AUG	-	-	-	-	-	-	-	-	-	-	-	-
2	RHR Service Water			OWN	-	-	-	-	-	-	-	-	-	-	-	-
				PRE	-	-	-	-	-	-	-	-	-	-	-	-
C-F-2	101082		ISI-13142-48-A	ISI	-	-	-	-	-	-	-	-	-	-	-	-
CX.XX	W-26		Pipe-to-Valve	AUG	-	-	-	-	-	-	-	-	-	-	-	-
2	RHR Service Water			OWN	-	-	-	-	-	-	-	-	-	-	-	-
				PRE	-	-	-	-	-	-	-	-	-	-	-	-
C-F-2	101083		ISI-13142-48-A	ISI	-	-	-	-	-	-	-	-	-	-	-	-
CX.XX	W-27		Valve-to-Elbow	AUG	-	-	-	-	-	-	-	-	-	-	-	-
2	RHR Service Water			OWN	-	-	-	-	-	-	-	-	-	-	-	-
				PRE	-	-	-	-	-	-	-	-	-	-	-	-
C-F-2	101084		ISI-13142-48-A	ISI	-	-	-	-	-	-	-	-	-	-	-	-
CX.XX	W-28		Elbow-to-Pipe	AUG	-	-	-	-	-	-	-	-	-	-	-	-
2	RHR Service Water			OWN	-	-	-	-	-	-	-	-	-	-	-	-
				PRE	-	-	-	-	-	-	-	-	-	-	-	-
C-F-2	101085		ISI-13142-48-A	ISI	-	-	-	-	-	-	-	-	-	-	-	-
CX.XX	W-29		Pipe-to-Tee	AUG	-	-	-	-	-	-	-	-	-	-	-	-
2	RHR Service Water			OWN	-	-	-	-	-	-	-	-	-	-	-	-
				PRE	-	-	-	-	-	-	-	-	-	-	-	-
C-F-2	101086		ISI-13142-48-B	ISI	-	-	-	-	-	-	-	-	-	-	-	-
CX.XX	W- 1		Valve-to-Elbow	AUG	-	-	-	-	-	-	-	-	-	-	-	-
2	RHR Service Water			OWN	-	-	-	-	-	-	-	-	-	-	-	-
				PRE	-	-	-	-	-	-	-	-	-	-	-	-
C-F-2	101087		ISI-13142-48-B	ISI	-	-	-	-	-	-	-	-	-	-	-	-
CX.XX	W- 2		Elbow-to-Pipe	AUG	-	-	-	-	-	-	-	-	-	-	-	-
2	RHR Service Water			OWN	-	-	-	-	-	-	-	-	-	-	-	-
				PRE	-	-	-	-	-	-	-	-	-	-	-	-
C-F-2	101088		ISI-13142-48-B	ISI	-	-	-	-	-	-	-	-	-	-	-	-
CX.XX	W- 3		Pipe-to-Elbow	AUG	-	-	-	-	-	-	-	-	-	-	-	-
2	RHR Service Water			OWN	-	-	-	-	-	-	-	-	-	-	-	-
				PRE	-	-	-	-	-	-	-	-	-	-	-	-
C-F-2	101089		ISI-13142-48-B	ISI	-	-	-	-	-	-	-	-	-	-	-	-
CX.XX	W- 4		Elbow-to-Pipe	AUG	-	-	-	-	-	-	-	-	-	-	-	-
2	RHR Service Water			OWN	-	-	-	-	-	-	-	-	-	-	-	-
				PRE	-	-	-	-	-	-	-	-	-	-	-	-

MONTICELLO Nuclear Generating Plant
3rd Interval ISI Plan Rev. 3 June 1, 1992 to May 31, 2002

Category, ItemNO, Class	Summary / CompID / System	Scope / Method / Procedure	Iso No. Comp. Desc. Code Case /Note		Period 1				Period 2				Period 3			
					1	2	3	4	1	2	3	4	1	2	3	4
C-F-2	101090		ISI-13142-48-B	ISI	-	-	-	-	-	-	-	-	-	-	-	-
CX.XX	W- 5		Pipe-to-Elbow	AUG	-	-	-	-	-	-	-	-	-	-	-	-
2	RHR Service Water			OWN	-	-	-	-	-	-	-	-	-	-	-	-
				PRE	-	-	-	-	-	-	-	-	-	-	-	-
C-F-2	101091		ISI-13142-48-B	ISI	-	-	-	-	-	-	-	-	-	-	-	-
CX.XX	W- 6		Elbow-to-Pipe	AUG	-	-	-	-	-	-	-	-	-	-	-	-
2	RHR Service Water			OWN	-	-	-	-	-	-	-	-	-	-	-	-
				PRE	-	-	-	-	-	-	-	-	-	-	-	-
C-F-2	101092		ISI-13142-48-B	ISI	-	-	-	-	-	-	-	-	-	-	-	-
CX.XX	W- 7		Pipe-to-Elbow	AUG	-	-	-	-	-	-	-	-	-	-	-	-
2	RHR Service Water			OWN	-	-	-	-	-	-	-	-	-	-	-	-
				PRE	-	-	-	-	-	-	-	-	-	-	-	-
C-F-2	101093		ISI-13142-48-B	ISI	-	-	-	-	-	-	-	-	-	-	-	-
CX.XX	W- 8		Elbow-to-Pipe	AUG	-	-	-	-	-	-	-	-	-	-	-	-
2	RHR Service Water			OWN	-	-	-	-	-	-	-	-	-	-	-	-
				PRE	-	-	-	-	-	-	-	-	-	-	-	-
C-F-2	101094		ISI-13142-48-B	ISI	-	-	-	-	-	-	-	-	-	-	-	-
CX.XX	W- 9		Pipe-to-Elbow	AUG	-	-	-	-	-	-	-	-	-	-	-	-
2	RHR Service Water			OWN	-	-	-	-	-	-	-	-	-	-	-	-
				PRE	-	-	-	-	-	-	-	-	-	-	-	-
C-F-2	101095		ISI-13142-48-B	ISI	-	-	-	-	-	-	-	-	-	-	-	-
CX.XX	W-10		Elbow-to-Pipe	AUG	-	-	-	-	-	-	-	-	-	-	-	-
2	RHR Service Water			OWN	-	-	-	-	-	-	-	-	-	-	-	-
				PRE	-	-	-	-	-	-	-	-	-	-	-	-
C-F-2	101096		ISI-13142-48-B	ISI	-	-	-	-	-	-	-	-	-	-	-	-
CX.XX	W-11		Pipe-to-Elbow	AUG	-	-	-	-	-	-	-	-	-	-	-	-
2	RHR Service Water			OWN	-	-	-	-	-	-	-	-	-	-	-	-
				PRE	-	-	-	-	-	-	-	-	-	-	-	-
C-F-2	101097		ISI-13142-48-B	ISI	-	-	-	-	-	-	-	-	-	-	-	-
CX.XX	W-12		Elbow-to-Pipe	AUG	-	-	-	-	-	-	-	-	-	-	-	-
2	RHR Service Water			OWN	-	-	-	-	-	-	-	-	-	-	-	-
				PRE	-	-	-	-	-	-	-	-	-	-	-	-
C-F-2	101098		ISI-13142-48-B	ISI	-	-	-	-	-	-	-	-	-	-	-	-
CX.XX	W-13		Pipe-to-Elbow	AUG	-	-	-	-	-	-	-	-	-	-	-	-
2	RHR Service Water			OWN	-	-	-	-	-	-	-	-	-	-	-	-
				PRE	-	-	-	-	-	-	-	-	-	-	-	-
C-F-2	101099		ISI-13142-48-B	ISI	-	-	-	-	-	-	-	-	-	-	-	-
CX.XX	W-14		Elbow-to-Pipe	AUG	-	-	-	-	-	-	-	-	-	-	-	-
2	RHR Service Water			OWN	-	-	-	-	-	-	-	-	-	-	-	-
				PRE	-	-	-	-	-	-	-	-	-	-	-	-

MONTICELLO Nuclear Generating Plant
3rd Interval ISI Plan Rev. 3 June 1, 1992 to May 31, 2002

Category, ItemNO, Class	Summary / CompID / System	Scope / Method / Procedure	Iso No. Comp. Desc. Code Case /Note		Period 1				Period 2				Period 3			
					1	2	3	4	1	2	3	4	1	2	3	4
C-F-2	101100		ISI-13142-48-B	ISI	-	-	-	-	-	-	-	-	-	-	-	-
CX.XX	W-15		Pipe-to-Elbow	AUG	-	-	-	-	-	-	-	-	-	-	-	-
2	RHR Service Water			OWN	-	-	-	-	-	-	-	-	-	-	-	-
				PRE	-	-	-	-	-	-	-	-	-	-	-	-
C-F-2	101101		ISI-13142-48-B	ISI	-	-	-	-	-	-	-	-	-	-	-	-
CX.XX	W-16		Elbow-to-Pipe	AUG	-	-	-	-	-	-	-	-	-	-	-	-
2	RHR Service Water			OWN	-	-	-	-	-	-	-	-	-	-	-	-
				PRE	-	-	-	-	-	-	-	-	-	-	-	-
C-F-2	101102		ISI-13142-48-B	ISI	-	-	-	-	-	-	-	-	-	-	-	-
CX.XX	W-17		Pipe-to-Elbow	AUG	-	-	-	-	-	-	-	-	-	-	-	-
2	RHR Service Water			OWN	-	-	-	-	-	-	-	-	-	-	-	-
				PRE	-	-	-	-	-	-	-	-	-	-	-	-
C-F-2	101103		ISI-13142-48-B	ISI	-	-	-	-	-	-	-	-	-	-	-	-
CX.XX	W-18		Elbow-to-Pipe	AUG	-	-	-	-	-	-	-	-	-	-	-	-
2	RHR Service Water			OWN	-	-	-	-	-	-	-	-	-	-	-	-
				PRE	-	-	-	-	-	-	-	-	-	-	-	-
F-C	101104	ISI/VT/ISI-VT-2.0	ISI-13142-49-A	ISI	-	-	-	-	-	-	-	-	-	s	-	-
F-A,B,C	H- 1		Spring / Clamp	AUG	-	-	-	-	-	-	-	-	-	-	-	-
2	RHR Suction A			OWN	-	-	-	-	-	-	-	-	-	-	-	-
				PRE	-	-	-	-	-	-	-	-	-	-	-	-
F-C	101105	ISI/VT/ISI-VT-2.0	ISI-13142-49-A	ISI	-	-	-	-	-	-	-	-	-	s	-	-
F-A,B,C	H- 2		Dbl Spring / Tee	AUG	-	-	-	-	-	-	-	-	-	-	-	-
2	RHR Suction A			OWN	-	-	-	-	-	-	-	-	-	-	-	-
				PRE	-	-	-	-	-	-	-	-	-	-	-	-
F-B	101106	ISI/VT/ISI-VT-2.0	ISI-13142-49-A	ISI	-	-	-	-	-	-	-	-	-	s	-	-
F-A,B,C	H- 3		Dbl Strut/Dbl Clamp	AUG	-	-	-	-	-	-	-	-	-	-	-	-
2	RHR Suction A			OWN	-	-	-	-	-	-	-	-	-	-	-	-
				PRE	-	-	-	-	-	-	-	-	-	-	-	-
F-B	101107		ISI-13142-49-A	ISI	c	-	-	-	B	-	-	-	b	-	-	-
F-A,B,C	H- 4	ISI/VT/ISI-VT-2.0	Snubber / Clamp	AUG	-	-	-	-	-	-	-	-	-	-	-	-
2	RHR Suction A			OWN	-	-	-	-	-	-	-	-	-	-	-	-
				PRE	-	-	-	-	-	-	-	-	-	-	-	-
F-C	101108		ISI-13142-49-A	ISI	-	-	-	-	-	-	-	-	-	-	-	-
F-A,B,C	H- 5		Spring / Clamp	AUG	-	-	-	-	-	-	-	-	-	-	-	-
2	RHR Suction A			OWN	-	-	-	-	-	-	-	-	-	-	-	-
				PRE	-	-	-	-	-	-	-	-	-	-	-	-
F-C	101109	ISI/VT/ISI-VT-2.0	ISI-13142-49-A	ISI	-	-	-	-	c	-	-	-	-	-	-	-
F-A,B,C	H- 6		Spring / Clamp	AUG	-	-	-	-	-	-	-	-	-	-	-	-
2	RHR Suction B			OWN	-	-	-	-	-	-	-	-	-	-	-	-
				PRE	-	-	-	-	-	-	-	-	-	-	-	-

MONTICELLO Nuclear Generating Plant
3rd Interval ISI Plan Rev. 3 June 1, 1992 to May 31, 2002

Category, ItemNO, Class	Summary / CompID / System	Scope / Method / Procedure	Iso No. Comp. Desc. Code Case /Note		Period 1				Period 2				Period 3			
					1	2	3	4	1	2	3	4	1	2	3	4
F-B	101110	ISI/VT/ISI-VT-2.0	ISI-13142-49-A	ISI	c	-	-	-	-	-	-	-	-	-	-	-
F-A,B,C	H- 7		Dbl Strut/Dbl Strut	AUG	-	-	-	-	-	-	-	-	-	-	-	-
2	RHR Suction B			OWN	-	-	-	-	-	-	-	-	-	-	-	-
				PRE	-	-	-	-	-	-	-	-	-	-	-	-
F-C	101111	ISI/UT/ISI-VT-2.0	ISI-13142-49-A	ISI	-	-	-	-	c	-	-	-	-	-	-	-
F-A,B,C	H- 8		Spring / Clamp	AUG	-	-	-	-	-	-	-	-	-	-	-	-
2	RHR Suction B			OWN	-	-	-	-	-	-	-	-	-	-	-	-
				PRE	-	-	-	-	-	-	-	-	-	-	-	-
F-C	101112	ISI/VT/ISI-VT-2.1	ISI-13142-49-A	ISI	-	-	-	-	c	-	-	-	-	-	-	-
F-A,B,C	H- 9		Clamp	AUG	-	-	-	-	-	-	-	-	-	-	-	-
2	RHR Suction B			OWN	-	-	-	-	-	-	-	-	-	-	-	-
				PRE	-	-	-	-	-	-	-	-	-	-	-	-
F-B	101113		ISI-13142-49-A	ISI	c	-	-	-	B	-	-	-	b	-	-	-
F-A,B,C	H-10	ISI/VT/ISI-VT-2.0	Snubber / Clamp	AUG	-	-	-	-	-	-	-	-	-	-	-	-
2	RHR Suction B			OWN	-	-	-	-	-	-	-	-	-	-	-	-
				PRE	-	-	-	-	-	-	-	-	-	-	-	-
F-B	101114	ISI/VT/ISI-VT-2.0	ISI-13142-49-A	ISI	-	-	-	-	c	-	-	-	-	-	-	-
F-A,B,C	H-11		Slide	AUG	-	-	-	-	-	-	-	-	-	-	-	-
2	RHR Suction B			OWN	-	-	-	-	-	-	-	-	-	-	-	-
				PRE	-	-	-	-	-	-	-	-	-	-	-	-
C-F-2	101115		ISI-13142-49-A	ISI	-	-	-	-	-	-	-	-	-	-	-	-
C5.51	W- 1		Valve-to-Elbow	AUG	-	-	-	-	-	-	-	-	-	-	-	-
2	RHR Suction A			OWN	-	-	-	-	-	-	-	-	-	-	-	-
				PRE	-	-	-	-	-	-	-	-	-	-	-	-
C-F-2	101116		ISI-13142-49-A	ISI	-	-	-	-	-	-	-	-	-	-	-	-
C5.51	W- 2		Elbow-to-Pipe	AUG	-	-	-	-	-	-	-	-	-	-	-	-
2	RHR Suction A			OWN	-	-	-	-	-	-	-	-	-	-	-	-
				PRE	-	-	-	-	-	-	-	-	-	-	-	-
C-F-2	101117		ISI-13142-49-A	ISI	-	-	-	-	-	-	-	-	-	-	-	-
C5.51	W- 3		Pipe-to-Elbow	AUG	-	-	-	-	-	-	-	-	-	-	-	-
2	RHR Suction A			OWN	-	-	-	-	-	-	-	-	-	-	-	-
				PRE	-	-	-	-	-	-	-	-	-	-	-	-
C-F-2	101118		ISI-13142-49-A	ISI	-	-	-	-	-	-	-	-	-	-	-	-
C5.51	W- 4		Elbow-to-Pipe	AUG	-	-	-	-	-	-	-	-	-	-	-	-
2	RHR Suction A			OWN	-	-	-	-	-	-	-	-	-	-	-	-
				PRE	-	-	-	-	-	-	-	-	-	-	-	-
C-F-2	101119		ISI-13142-49-A	ISI	-	-	-	-	-	-	-	-	-	-	-	-
C5.51	W- 5		Elbow-to-Pipe	AUG	-	-	-	-	-	-	-	-	-	-	-	-
2	RHR Suction A			OWN	-	-	-	-	-	-	-	-	-	-	-	-
				PRE	-	-	-	-	-	-	-	-	-	-	-	-

MONTICELLO Nuclear Generating Plant
3rd Interval ISI Plan Rev. 3 June 1, 1992 to May 31, 2002

Category, ItemNO, Class	Summary / CompID / System	Scope / Method / Procedure	Iso No. Comp. Desc. Code Case /Note		Period 1				Period 2				Period 3			
					1	2	3	4	1	2	3	4	1	2	3	4
C-F-2	101120		ISI-13142-49-A	ISI	-	-	-	-	-	-	-	-	-	-	-	-
C5.51	W- 6		Pipe-to-Elbow	AUG	-	-	-	-	-	-	-	-	-	-	-	-
2	RHR Suction A			OWN	-	-	-	-	-	-	-	-	-	-	-	-
				PRE	-	-	-	-	-	-	-	-	-	-	-	-
C-F-2	101121		ISI-13142-49-A	ISI	-	-	-	-	-	-	-	-	-	-	-	-
C5.81	W- 7		Pipe-to-Branch	AUG	-	-	-	-	-	-	-	-	-	-	-	-
2	RHR Suction A			OWN	-	-	-	-	-	-	-	-	-	-	-	-
				PRE	-	-	-	-	-	-	-	-	-	-	-	-
C-F-2	101122		ISI-13142-49-A	ISI	-	-	-	-	-	-	-	-	-	-	-	-
C5.51	W- 8		Pipe-to-Pipe	AUG	-	-	-	-	-	-	-	-	-	-	-	-
2	RHR Suction A			OWN	-	-	-	-	-	-	-	-	-	-	-	-
				PRE	-	-	-	-	-	-	-	-	-	-	-	-
C-F-2	101123		ISI-13142-49-A	ISI	-	-	-	-	-	-	-	-	-	-	-	-
C5.51	W- 9		Pipe-to-Elbow	AUG	-	-	-	-	-	-	-	-	-	-	-	-
2	RHR Suction A			OWN	-	-	-	-	-	-	-	-	-	-	-	-
				PRE	-	-	-	-	-	-	-	-	-	-	-	-
C-F-2	101124		ISI-13142-49-A	ISI	-	-	-	-	-	-	-	-	-	-	-	-
C5.51	W-10		Elbow-to-Pipe	AUG	-	-	-	-	-	-	-	-	-	-	-	-
2	RHR Suction A			OWN	-	-	-	-	-	-	-	-	-	-	-	-
				PRE	-	-	-	-	-	-	-	-	-	-	-	-
C-F-2	101125		ISI-13142-49-A	ISI	-	-	-	-	-	-	-	-	-	-	-	-
C5.51	W-11		Pipe-to-Elbow	AUG	-	-	-	-	-	-	-	-	-	-	-	-
2	RHR Suction A			OWN	-	-	-	-	-	-	-	-	-	-	-	-
				PRE	-	-	-	-	-	-	-	-	-	-	-	-
C-F-2	101126		ISI-13142-49-A	ISI	-	-	-	-	-	-	-	-	-	-	-	-
C5.51	W-12		Elbow-to-Tee	AUG	-	-	-	-	-	-	-	-	-	-	-	-
2	RHR Suction A			OWN	-	-	-	-	-	-	-	-	-	-	-	-
				PRE	-	-	-	-	-	-	-	-	-	-	-	-
C-F-2	101127		ISI-13142-49-A	ISI	-	-	-	-	-	-	-	-	-	-	-	-
C5.51	W-13		Tee-to-Pipe	AUG	-	-	-	-	-	-	-	-	-	-	-	-
2	RHR Suction A			OWN	-	-	-	-	-	-	-	-	-	-	-	-
				PRE	-	-	-	-	-	-	-	-	-	-	-	-
C-F-2	101128		ISI-13142-49-A	ISI	-	-	-	-	-	-	-	-	-	-	-	-
C5.51	W-14		Pipe-to-Elbow	AUG	-	-	-	-	-	-	-	-	-	-	-	-
2	RHR Suction A			OWN	-	-	-	-	-	-	-	-	-	-	-	-
				PRE	-	-	-	-	-	-	-	-	-	-	-	-
C-F-2	101129	ISI/MT/ISI-MT-1	ISI-13142-49-A	ISI	c	-	-	-	-	-	-	-	-	-	-	-
C5.51	W-15	ISI/UT/ISI-UT-1	Elbow-to-Pipe	AUG	-	-	-	-	-	-	-	-	-	-	-	-
2	RHR Suction A			OWN	-	-	-	-	-	-	-	-	-	-	-	-
				PRE	-	-	-	-	-	-	-	-	-	-	-	-

MONTICELLO Nuclear Generating Plant
3rd Interval ISI Plan Rev. 3 June 1, 1992 to May 31, 2002

Category, ItemNO, Class	Summary / CompID / System	Scope / Method / Procedure	Iso No. Comp. Desc. Code Case /Note		Period 1				Period 2				Period 3			
					1	2	3	4	1	2	3	4	1	2	3	4
C-F-2	101130	ISI/MT/ISI-MT-1	ISI-13142-49-A	ISI	-	-	-	-	-	-	-	-	-	s	-	-
C5.51	W-16	ISI/UT/ISI-UT-1	Tee-to-Elbow	AUG	-	-	-	-	-	-	-	-	-	-	-	-
2	RHR Suction B			OWN	-	-	-	-	-	-	-	-	-	-	-	-
				PRE	-	-	-	-	-	-	-	-	-	-	-	-
C-F-2	101131		ISI-13142-49-A	ISI	-	-	-	-	-	-	-	-	-	-	-	-
C5.51	W-17		Elbow-to-Pipe	AUG	-	-	-	-	-	-	-	-	-	-	-	-
2	RHR Suction B			OWN	-	-	-	-	-	-	-	-	-	-	-	-
				PRE	-	-	-	-	-	-	-	-	-	-	-	-
C-F-2	101132		ISI-13142-49-A	ISI	-	-	-	-	-	-	-	-	-	-	-	-
C5.51	W-18		Pipe-to-Pipe	AUG	-	-	-	-	-	-	-	-	-	-	-	-
2	RHR Suction B			OWN	-	-	-	-	-	-	-	-	-	-	-	-
				PRE	-	-	-	-	-	-	-	-	-	-	-	-
C-F-2	101133		ISI-13142-49-A	ISI	-	-	-	-	-	-	-	-	-	-	-	-
C5.51	W-19		Pipe-to-Pipe	AUG	-	-	-	-	-	-	-	-	-	-	-	-
2	RHR Suction B			OWN	-	-	-	-	-	-	-	-	-	-	-	-
				PRE	-	-	-	-	-	-	-	-	-	-	-	-
C-F-2	101134	ISI/UT/ISI-UT-1	ISI-13142-49-A	ISI	-	-	-	-	c	-	-	-	-	-	-	-
C5.51	W-20	ISI/MT/ISI-MT-1	Pipe-to-Elbow	AUG	-	-	-	-	-	-	-	-	-	-	-	-
2	RHR Suction B			OWN	-	-	-	-	-	-	-	-	-	-	-	-
				PRE	-	-	-	-	-	-	-	-	-	-	-	-
C-F-2	101135		ISI-13142-49-A	ISI	-	-	-	-	-	-	-	-	-	-	-	-
C5.51	W-21		Elbow-to-Pipe	AUG	-	-	-	-	-	-	-	-	-	-	-	-
2	RHR Suction B			OWN	-	-	-	-	-	-	-	-	-	-	-	-
				PRE	-	-	-	-	-	-	-	-	-	-	-	-
C-F-2	101136	ISI/MT/ISI-MT-1	ISI-13142-49-A	ISI	-	-	-	-	c	-	-	-	-	-	-	-
C5.51	W-22	ISI/UT/ISI-UT-1	Pipe-to-Elbow	AUG	-	-	-	-	-	-	-	-	-	-	-	-
2	RHR Suction B			OWN	-	-	-	-	-	-	-	-	-	-	-	-
				PRE	-	-	-	-	-	-	-	-	-	-	-	-
C-F-2	101137		ISI-13142-49-A	ISI	-	-	-	-	-	-	-	-	-	-	-	-
C5.51	W-23		Elbow-to-Pipe	AUG	-	-	-	-	-	-	-	-	-	-	-	-
2	RHR Suction B			OWN	-	-	-	-	-	-	-	-	-	-	-	-
				PRE	-	-	-	-	-	-	-	-	-	-	-	-
C-F-2	101138		ISI-13142-49-A	ISI	-	-	-	-	-	-	-	-	-	-	-	-
C5.51	W-24		Pipe-to-Valve	AUG	-	-	-	-	-	-	-	-	-	-	-	-
2	RHR Suction B			OWN	-	-	-	-	-	-	-	-	-	-	-	-
				PRE	-	-	-	-	-	-	-	-	-	-	-	-
F-B	101139	ISI/VT/ISI-VT-2.0	ISI-13142-51-A	ISI	c	-	-	-	-	-	-	-	b	-	-	-
F-A,B,C	H- 1		Snubber / Dbl Strut	AUG	-	-	-	-	-	-	-	-	-	-	-	-
2	RHR Discharge A			OWN	-	-	-	-	-	-	-	-	-	-	-	-
				PRE	-	-	-	-	-	-	-	-	-	-	-	-

MONTICELLO Nuclear Generating Plant
3rd Interval ISI Plan Rev. 3 June 1, 1992 to May 31, 2002

Category, ItemNO, Class	Summary / CompID / System	Scope / Method / Procedure	Iso No. Comp. Desc. Code Case /Note		Period 1				Period 2				Period 3			
					1	2	3	4	1	2	3	4	1	2	3	4
C-F-2	101140		ISI-13142-51-A	ISI	-	-	-	-	-	-	-	-	-	-	-	-
C5.51	W- 1		Pump-to-Reducer	AUG	-	-	-	-	-	-	-	-	-	-	-	-
2	RHR Discharge A			OWN	-	-	-	-	-	-	-	-	-	-	-	-
				PRE	-	-	-	-	-	-	-	-	-	-	-	-
C-F-2	101141		ISI-13142-51-A	ISI	-	-	-	-	-	-	-	-	-	-	-	-
CX.XX	W- 2		Reducer-to-Valve	AUG	-	-	-	-	-	-	-	-	-	-	-	-
2	RHR Discharge A			OWN	-	-	-	-	-	-	-	-	-	-	-	-
				PRE	-	-	-	-	-	-	-	-	-	-	-	-
C-F-2	101142		ISI-13142-51-A	ISI	-	-	-	-	-	-	-	-	-	-	-	-
CX.XX	W- 3		Valve-to-Elbow	AUG	-	-	-	-	-	-	-	-	-	-	-	-
2	RHR Discharge A			OWN	-	-	-	-	-	-	-	-	-	-	-	-
				PRE	-	-	-	-	-	-	-	-	-	-	-	-
C-F-2	101143		ISI-13142-51-A	ISI	-	-	-	-	-	-	-	-	-	-	-	-
CX.XX	W- 4		Elbow-to-Elbow	AUG	-	-	-	-	-	-	-	-	-	-	-	-
2	RHR Discharge A			OWN	-	-	-	-	-	-	-	-	-	-	-	-
				PRE	-	-	-	-	-	-	-	-	-	-	-	-
C-F-2	101144		ISI-13142-51-A	ISI	-	-	-	-	-	-	-	-	-	-	-	-
CX.XX	W- 5		Elbow-to-Valve	AUG	-	-	-	-	-	-	-	-	-	-	-	-
2	RHR Discharge A			OWN	-	-	-	-	-	-	-	-	-	-	-	-
				PRE	-	-	-	-	-	-	-	-	-	-	-	-
C-F-2	101145		ISI-13142-51-A	ISI	-	-	-	-	-	-	-	-	-	-	-	-
CX.XX	W- 6		Valve-to-Pipe	AUG	-	-	-	-	-	-	-	-	-	-	-	-
2	RHR Discharge A			OWN	-	-	-	-	-	-	-	-	-	-	-	-
				PRE	-	-	-	-	-	-	-	-	-	-	-	-
C-F-2	101146		ISI-13142-51-A	ISI	-	-	-	-	-	-	-	-	-	-	-	-
CX.XX	W- 7		Pipe-to-Elbow	AUG	-	-	-	-	-	-	-	-	-	-	-	-
2	RHR Discharge A			OWN	-	-	-	-	-	-	-	-	-	-	-	-
				PRE	-	-	-	-	-	-	-	-	-	-	-	-
C-F-2	101147		ISI-13142-51-A	ISI	-	-	-	-	-	-	-	-	-	-	-	-
CX.XX	W- 8		Elbow-to-Reducer	AUG	-	-	-	-	-	-	-	-	-	-	-	-
2	RHR Discharge A			OWN	-	-	-	-	-	-	-	-	-	-	-	-
				PRE	-	-	-	-	-	-	-	-	-	-	-	-
C-F-2	101148		ISI-13142-51-A	ISI	-	-	-	-	-	-	-	-	-	-	-	-
C5.51	W- 9		Reducer-to-Tee	AUG	-	-	-	-	-	-	-	-	-	-	-	-
2	RHR Discharge A			OWN	-	-	-	-	-	-	-	-	-	-	-	-
				PRE	-	-	-	-	-	-	-	-	-	-	-	-
C-F-2	101149		ISI-13142-51-A	ISI	-	-	-	-	-	-	-	-	-	-	-	-
C5.51	W-10		Pump-to-Reducer	AUG	-	-	-	-	-	-	-	-	-	-	-	-
2	RHR Discharge A			OWN	-	-	-	-	-	-	-	-	-	-	-	-
				PRE	-	-	-	-	-	-	-	-	-	-	-	-

MONTICELLO Nuclear Generating Plant
3rd Interval ISI Plan Rev. 3 June 1, 1992 to May 31, 2002

Category, ItemNO, Class	Summary / CompID / System	Scope / Method / Procedure	Iso No. Comp. Desc. Code Case /Note		Period 1				Period 2				Period 3			
					1	2	3	4	1	2	3	4	1	2	3	4
C-F-2	101150		ISI-13142-51-A	ISI	-	-	-	-	-	-	-	-	-	-	-	-
CX.XX	W-11		Reducer-to-Elbow	AUG	-	-	-	-	-	-	-	-	-	-	-	-
2	RHR Discharge A			OWN	-	-	-	-	-	-	-	-	-	-	-	-
				PRE	-	-	-	-	-	-	-	-	-	-	-	-
C-F-2	101151		ISI-13142-51-A	ISI	-	-	-	-	-	-	-	-	-	-	-	-
CX.XX	W-12		Elbow-to-Pipe	AUG	-	-	-	-	-	-	-	-	-	-	-	-
2	RHR Discharge A			OWN	-	-	-	-	-	-	-	-	-	-	-	-
				PRE	-	-	-	-	-	-	-	-	-	-	-	-
C-F-2	101152		ISI-13142-51-A	ISI	-	-	-	-	-	-	-	-	-	-	-	-
CX.XX	W-13		Pipe-to-Elbow	AUG	-	-	-	-	-	-	-	-	-	-	-	-
2	RHR Discharge A			OWN	-	-	-	-	-	-	-	-	-	-	-	-
				PRE	-	-	-	-	-	-	-	-	-	-	-	-
C-F-2	101153		ISI-13142-51-A	ISI	-	-	-	-	-	-	-	-	-	-	-	-
CX.XX	W-14		Elbow-to-Valve	AUG	-	-	-	-	-	-	-	-	-	-	-	-
2	RHR Discharge A			OWN	-	-	-	-	-	-	-	-	-	-	-	-
				PRE	-	-	-	-	-	-	-	-	-	-	-	-
C-F-2	101154		ISI-13142-51-A	ISI	-	-	-	-	-	-	-	-	-	-	-	-
CX.XX	W-15		Valve-to-Pipe	AUG	-	-	-	-	-	-	-	-	-	-	-	-
2	RHR Discharge A			OWN	-	-	-	-	-	-	-	-	-	-	-	-
				PRE	-	-	-	-	-	-	-	-	-	-	-	-
C-F-2	101155		ISI-13142-51-A	ISI	-	-	-	-	-	-	-	-	-	-	-	-
CX.XX	W-16		Pipe-to-Elbow	AUG	-	-	-	-	-	-	-	-	-	-	-	-
2	RHR Discharge A			OWN	-	-	-	-	-	-	-	-	-	-	-	-
				PRE	-	-	-	-	-	-	-	-	-	-	-	-
C-F-2	101156		ISI-13142-51-A	ISI	-	-	-	-	-	-	-	-	-	-	-	-
CX.XX	W-17		Elbow-to-Valve	AUG	-	-	-	-	-	-	-	-	-	-	-	-
2	RHR Discharge A			OWN	-	-	-	-	-	-	-	-	-	-	-	-
				PRE	-	-	-	-	-	-	-	-	-	-	-	-
C-F-2	101157		ISI-13142-51-A	ISI	-	-	-	-	-	-	-	-	-	-	-	-
CX.XX	W-18		Valve-to-Pipe	AUG	-	-	-	-	-	-	-	-	-	-	-	-
2	RHR Discharge A			OWN	-	-	-	-	-	-	-	-	-	-	-	-
				PRE	-	-	-	-	-	-	-	-	-	-	-	-
C-F-2	101158		ISI-13142-51-A	ISI	-	-	-	-	-	-	-	-	-	-	-	-
CX.XX	W-19		Pipe-to-Tee	AUG	-	-	-	-	-	-	-	-	-	-	-	-
2	RHR Discharge A			OWN	-	-	-	-	-	-	-	-	-	-	-	-
				PRE	-	-	-	-	-	-	-	-	-	-	-	-
C-F-2	101159	ISI/MT/ISI-MT-1	ISI-13142-51-A	ISI	-	-	-	-	-	C	-	-	-	-	-	-
C5.51	W-20	ISI/UT/ISI-UT-1	Tee-to-Pipe	AUG	-	-	-	-	-	-	-	-	-	-	-	-
2	RHR Discharge A			OWN	-	-	-	-	-	-	-	-	-	-	-	-
				PRE	-	-	-	-	-	-	-	-	-	-	-	-

MONTICELLO Nuclear Generating Plant
3rd Interval ISI Plan Rev. 3 June 1, 1992 to May 31, 2002

Category, ItemNO, Class	Summary / CompID / System	Scope / Method / Procedure	Iso No. Comp. Desc. Code Case /Note		Period 1				Period 2				Period 3			
					1	2	3	4	1	2	3	4	1	2	3	4
C-F-2	101160		ISI-13142-51-A	ISI	-	-	-	-	-	-	-	-	-	-	-	-
C5.51	W-21		Pipe-to-Elbow	AUG	-	-	-	-	-	-	-	-	-	-	-	-
2	RHR Discharge A			OWN	-	-	-	-	-	-	-	-	-	-	-	-
				PRE	-	-	-	-	-	-	-	-	-	-	-	-
C-F-2	101161		ISI-13142-51-A	ISI	-	-	-	-	-	-	-	-	-	-	-	-
C5.51	W-22		Elbow-to-Tee	AUG	-	-	-	-	-	-	-	-	-	-	-	-
2	RHR Discharge A			OWN	-	-	-	-	-	-	-	-	-	-	-	-
				PRE	-	-	-	-	-	-	-	-	-	-	-	-
C-F-2	101162		ISI-13142-51-A	ISI	-	-	-	-	-	-	-	-	-	-	-	-
C5.51	W-23		Tee-to-Valve	AUG	-	-	-	-	-	-	-	-	-	-	-	-
2	RHR Discharge A			OWN	-	-	-	-	-	-	-	-	-	-	-	-
				PRE	-	-	-	-	-	-	-	-	-	-	-	-
C-F-2	101163		ISI-13142-51-A	ISI	-	-	-	-	-	-	-	-	-	-	-	-
C5.51	W-24		Valve-to-Reducer	AUG	-	-	-	-	-	-	-	-	-	-	-	-
2	RHR Discharge A			OWN	-	-	-	-	-	-	-	-	-	-	-	-
				PRE	-	-	-	-	-	-	-	-	-	-	-	-
C-F-2	101164	ISI/MT/ISI-MT-1	ISI-13142-51-A	ISI	c	-	-	-	-	-	-	-	-	-	-	-
C5.51	W-25	ISI/UT/ISI-UT-1	Reducer-to-Nozzle	AUG	-	-	-	-	-	-	-	-	-	-	-	-
2	RHR Discharge A			OWN	-	-	-	-	-	-	-	-	-	-	-	-
				PRE	-	-	-	-	-	-	-	-	-	-	-	-
F-B	101165	ISI/VT/ISI-VT-2.0	ISI-13142-51-B	ISI	-	-	-	-	c	B	-	-	-	-	-	-
F-A,B,C	H- 1		Strut / Clamp	AUG	-	-	-	-	-	-	-	-	-	-	-	-
2	Containment Spray			OWN	-	-	-	-	-	-	-	-	-	-	-	-
				PRE	-	-	-	-	-	-	-	-	-	-	-	-
C-C	101167	ISI/VT/ISI-VT-2.0	ISI-13142-51-B	ISI	c	-	-	-	-	-	-	-	-	-	-	-
C3.20	H- 2	ISI/MT/ISI-MT-1	Dbl Spring / 4 Lugs	AUG	-	-	-	-	-	-	-	-	-	-	-	-
2	Containment Spray			OWN	-	-	-	-	-	-	-	-	-	-	-	-
				PRE	-	-	-	-	-	-	-	-	-	-	-	-
F-C	101168	ISI/VT/ISI-VT-2.0	ISI-13142-51-B	ISI	c	-	-	-	-	B	-	-	-	-	-	-
F-A,B,C	H- 3		Dbl Spring / Clamp	AUG	-	-	-	-	-	-	-	-	-	-	-	-
2	Containment Spray			OWN	-	-	-	-	-	-	-	-	-	-	-	-
				PRE	-	-	-	-	-	-	-	-	-	-	-	-
F-B	101169	ISI/VT/ISI-VT-2.0	ISI-13142-51-B	ISI	c	-	-	-	-	B	-	-	-	-	-	-
F-A,B,C	H- 4		Strut / Clamp	AUG	-	-	-	-	-	-	-	-	-	-	-	-
2	Containment Spray			OWN	-	-	-	-	-	-	-	-	-	-	-	-
				PRE	-	-	-	-	-	-	-	-	-	-	-	-
F-B	101170	ISI/VT/ISI-VT-2.0	ISI-13142-51-B	ISI	c	-	-	-	B	B	-	-	-	-	-	-
F-A,B,C	H- 5		Dbl Strut/Dbl Clamp	AUG	-	-	-	-	-	-	-	-	-	-	-	-
2	Containment Spray			OWN	-	-	-	-	-	-	-	-	-	-	-	-
				PRE	-	-	-	-	-	-	-	-	-	-	-	-

MONTICELLO Nuclear Generating Plant
3rd Interval ISI Plan Rev. 3 June 1, 1992 to May 31, 2002

Category, ItemNO, Class	Summary / CompID / System	Scope / Method / Procedure	Iso No. Comp. Desc. Code Case /Note		Period 1				Period 2				Period 3			
					1	2	3	4	1	2	3	4	1	2	3	4
F-C	101171	ISI/VT/ISI-VT-2.0	ISI-13142-51-B	ISI	-	-	-	-	c	-	-	-	-	-	-	-
F-A,B,C	H- 6		Spring / Clamp	AUG	-	-	-	-	-	-	-	-	-	-	-	-
2	Containment Spray			OWN	-	-	-	-	-	-	-	-	-	-	-	-
				PRE	-	-	-	-	-	-	-	-	-	-	-	-
F-C	101172	ISI/VT/ISI-VT-2.0	ISI-13142-51-B	ISI	-	-	-	-	-	-	-	-	s	-	-	-
F-A,B,C	H- 7		Spring / Clamp	AUG	-	-	-	-	-	-	-	-	-	-	-	-
2	Containment Spray			OWN	-	-	-	-	-	-	-	-	-	-	-	-
				PRE	-	-	-	-	-	-	-	-	-	-	-	-
F-B	101173	ISI/VT/ISI-VT-2.0	ISI-13142-51-B	ISI	-	-	-	-	-	-	-	-	s	-	-	-
F-A,B,C	H- 8		Strut / Clamp	AUG	-	-	-	-	-	-	-	-	-	-	-	-
2	Containment Spray			OWN	-	-	-	-	-	-	-	-	-	-	-	-
				PRE	-	-	-	-	-	-	-	-	-	-	-	-
C-F-2	101175		ISI-13142-51-B	ISI	-	-	-	-	-	-	-	-	-	-	-	-
C5.51	W- 1		Reducer-to-Pipe	AUG	-	-	-	-	-	-	-	-	-	-	-	-
2	Containment Spray			OWN	-	-	-	-	-	-	-	-	-	-	-	-
				PRE	-	-	-	-	-	-	-	-	-	-	-	-
C-F-2	101176		ISI-13142-51-B	ISI	-	-	-	-	-	-	-	-	-	-	-	-
C5.51	W- 2		Pipe-to-Elbow	AUG	-	-	-	-	-	-	-	-	-	-	-	-
2	Containment Spray			OWN	-	-	-	-	-	-	-	-	-	-	-	-
				PRE	-	-	-	-	-	-	-	-	-	-	-	-
C-F-2	101177	ISI/MT/ISI-MT-1	ISI-13142-51-B	ISI	-	-	-	-	c	-	-	-	-	-	-	-
C5.51	W- 3	ISI/UT/ISI-UT-1	Elbow-to-Pipe	AUG	-	-	-	-	-	-	-	-	-	-	-	-
2	Containment Spray			OWN	-	-	-	-	-	-	-	-	-	-	-	-
				PRE	-	-	-	-	-	-	-	-	-	-	-	-
C-F-2	101178		ISI-13142-51-B	ISI	-	-	-	-	-	-	-	-	-	-	-	-
C5.51	W- 4		Pipe-to-Pipe	AUG	-	-	-	-	-	-	-	-	-	-	-	-
2	Containment Spray			OWN	-	-	-	-	-	-	-	-	-	-	-	-
				PRE	-	-	-	-	-	-	-	-	-	-	-	-
C-F-2	101179		ISI-13142-51-B	ISI	-	-	-	-	-	-	-	-	-	-	-	-
C5.51	W- 5		Pipe-to-Elbow	AUG	-	-	-	-	-	-	-	-	-	-	-	-
2	Containment Spray			OWN	-	-	-	-	-	-	-	-	-	-	-	-
				PRE	-	-	-	-	-	-	-	-	-	-	-	-
C-F-2	101180		ISI-13142-51-B	ISI	-	-	-	-	-	-	-	-	-	-	-	-
C5.51	W- 6		Elbow-to-Pipe	AUG	-	-	-	-	-	-	-	-	-	-	-	-
2	Containment Spray			OWN	-	-	-	-	-	-	-	-	-	-	-	-
				PRE	-	-	-	-	-	-	-	-	-	-	-	-
C-F-2	101181		ISI-13142-51-B	ISI	-	-	-	-	-	-	-	-	-	-	-	-
C5.51	W- 7		Pipe-to-Elbow	AUG	-	-	-	-	-	-	-	-	-	-	-	-
2	Containment Spray			OWN	-	-	-	-	-	-	-	-	-	-	-	-
				PRE	-	-	-	-	-	-	-	-	-	-	-	-

MONTICELLO Nuclear Generating Plant
3rd Interval ISI Plan Rev. 3 June 1, 1992 to May 31, 2002

Category, ItemNO, Class	Summary / CompID / System	Scope / Method / Procedure	Iso No. Comp. Desc. Code Case /Note		Period 1				Period 2				Period 3			
					1	2	3	4	1	2	3	4	1	2	3	4
C-F-2	101182		ISI-13142-51-B	ISI	-	-	-	-	-	-	-	-	-	-	-	-
C5.51	W- 8		Elbow-to-Pipe	AUG	-	-	-	-	-	-	-	-	-	-	-	-
2	Containment Spray			OWN	-	-	-	-	-	-	-	-	-	-	-	-
				PRE	-	-	-	-	-	-	-	-	-	-	-	-
C-F-2	101183		ISI-13142-51-B	ISI	-	-	-	-	-	-	-	-	-	-	-	-
C5.51	W- 9		Pipe-to-Pipe	AUG	-	-	-	-	-	-	-	-	-	-	-	-
2	Containment Spray			OWN	-	-	-	-	-	-	-	-	-	-	-	-
				PRE	-	-	-	-	-	-	-	-	-	-	-	-
C-F-2	101184		ISI-13142-51-B	ISI	-	-	-	-	-	-	-	-	-	-	-	-
C5.51	W-10		Pipe-to-Pipe	AUG	-	-	-	-	-	-	-	-	-	-	-	-
2	Containment Spray			OWN	-	-	-	-	-	-	-	-	-	-	-	-
				PRE	-	-	-	-	-	-	-	-	-	-	-	-
C-F-2	101185		ISI-13142-51-B	ISI	-	-	-	-	-	-	-	-	-	-	-	-
C5.51	W-11		Pipe-to-Tee	AUG	-	-	-	-	-	-	-	-	-	-	-	-
2	Containment Spray			OWN	-	-	-	-	-	-	-	-	-	-	-	-
				PRE	-	-	-	-	-	-	-	-	-	-	-	-
C-F-2	101186	ISI/MT/ISI-MT-1	ISI-13142-51-B	ISI	-	-	-	-	-	-	-	-	s	-	-	-
C5.51	W-12	ISI/UT/ISI-UT-1	Tee-to-Pipe	AUG	-	-	-	-	-	-	-	-	-	-	-	-
2	Containment Spray			OWN	-	-	-	-	-	-	-	-	-	-	-	-
				PRE	-	-	-	-	-	-	-	-	-	-	-	-
C-F-2	101187		ISI-13142-51-B	ISI	-	-	-	-	-	-	-	-	-	-	-	-
C5.51	W-13		Pipe-to-Reducer	AUG	-	-	-	-	-	-	-	-	-	-	-	-
2	Containment Spray			OWN	-	-	-	-	-	-	-	-	-	-	-	-
				PRE	-	-	-	-	-	-	-	-	-	-	-	-
C-F-2	101188		ISI-13142-51-B	ISI	-	-	-	-	-	-	-	-	-	-	-	-
CX.XX	W-14		Reducer-to-Valve	AUG	-	-	-	-	-	-	-	-	-	-	-	-
2	Containment Spray			OWN	-	-	-	-	-	-	-	-	-	-	-	-
				PRE	-	-	-	-	-	-	-	-	-	-	-	-
C-F-2	101189		ISI-13142-51-B	ISI	-	-	-	-	-	-	-	-	-	-	-	-
C5.51	W-15		Tee-to-Pipe	AUG	-	-	-	-	-	-	-	-	-	-	-	-
2	Containment Spray			OWN	-	-	-	-	-	-	-	-	-	-	-	-
				PRE	-	-	-	-	-	-	-	-	-	-	-	-
C-F-2	101190		ISI-13142-51-B	ISI	-	-	-	-	-	-	-	-	-	-	-	-
C5.51	W-16		Pipe-to-Valve	AUG	-	-	-	-	-	-	-	-	-	-	-	-
2	Containment Spray			OWN	-	-	-	-	-	-	-	-	-	-	-	-
				PRE	-	-	-	-	-	-	-	-	-	-	-	-
B-G-2	101191	ISI/UT/ISI-VT-1.0	ISI-13142-52-A	ISI	-	c	-	-	-	-	-	-	-	-	-	-
B7.70	B- 1		Valve Bolts	AUG	-	-	-	-	-	-	-	-	-	-	-	-
1	Feedwater			OWN	-	-	-	-	-	-	-	-	-	-	-	-
				PRE	-	-	-	-	-	-	-	-	-	-	-	-

MONTICELLO Nuclear Generating Plant
3rd Interval ISI Plan Rev. 3 June 1, 1992 to May 31, 2002

Category, ItemNO, Class	Summary / CompID / System	Scope / Method / Procedure	Iso No. Comp. Desc. Code Case /Note		Period 1				Period 2				Period 3			
					1	2	3	4	1	2	3	4	1	2	3	4
B-G-2	101192	ISI/VT/ISI-VT-1.0	ISI-13142-52-A	ISI	-	c	-	-	-	-	-	-	-	-	-	-
B7.70	B- 2		Valve Bolts	AUG	-	-	-	-	-	-	-	-	-	-	-	-
1	Feedwater			OWN	-	-	-	-	-	-	-	-	-	-	-	-
				PRE	-	-	-	-	-	-	-	-	-	-	-	-
B-G-2	101193	ISI/VT/ISI-VT-1.0	ISI-13142-52-A	ISI	-	c	-	-	-	-	-	-	-	-	-	-
B7.70	B- 3		Valve Bolts	AUG	-	-	-	-	-	-	-	-	-	-	-	-
1	Feedwater			OWN	-	-	-	-	-	-	-	-	-	-	-	-
				PRE	-	-	-	-	-	-	-	-	-	-	-	-
F-C	101194		ISI-13142-52-A	ISI	-	-	-	-	-	-	-	-	-	-	-	-
F-A,B,C	H- 1		Spring / Clamp	AUG	-	-	-	-	-	-	-	-	-	-	-	-
1	Feedwater			OWN	-	-	-	-	-	-	-	-	-	-	-	-
				PRE	-	-	-	-	-	-	-	-	-	-	-	-
F-C	101196	ISI/VT/ISI-VT-2.0	ISI-13142-52-A	ISI	c	-	-	-	-	-	-	-	-	-	-	-
F-A,B,C	H- 2		Variable / Spring	AUG	-	-	-	-	-	-	-	-	-	-	-	-
1	Feedwater			OWN	-	-	-	-	-	-	-	-	-	-	-	-
				PRE	-	-	-	-	-	-	-	-	-	-	-	-
B-K-1	101197	ISI/MT/ISI-MT-1	ISI-13142-52-A	ISI	c	-	-	-	-	-	-	-	-	-	-	-
B10.10	H- 3	ISI/VT/ISI-VT-2.0	Double Spring/4 Lugs	AUG	-	-	-	-	-	-	-	-	-	-	-	-
1	Feedwater			OWN	-	-	-	-	-	-	-	-	-	-	-	-
				PRE	-	-	-	-	-	-	-	-	-	-	-	-
F-B	101198	ISI/VT/ISI-VT-2.0	ISI-13142-52-A	ISI	c	B	-	-	-	B	-	-	-	-	-	-
F-A,B,C	H- 4		Snubber / Clamp	AUG	-	-	-	-	-	-	-	-	-	-	-	-
1	Feedwater			OWN	-	-	-	-	-	-	-	-	-	-	-	-
				PRE	-	-	-	-	-	-	-	-	-	-	-	-
F-C	101199	ISI/VT/ISI-VT-2.0	ISI-13142-52-A	ISI	-	-	-	-	-	-	-	-	s	-	-	-
F-A,B,C	H- 5		Spring / Clamp	AUG	-	-	-	-	-	-	-	-	-	-	-	-
1	Feedwater			OWN	-	-	-	-	-	-	-	-	-	-	-	-
				PRE	-	-	-	-	-	-	-	-	-	-	-	-
F-C	101200	ISI/VT/ISI-VT-2.0	ISI-13142-52-A	ISI	-	-	-	-	-	-	-	-	s	-	-	-
F-A,B,C	H- 6		Spring / Clamp	AUG	-	-	-	-	-	-	-	-	-	-	-	-
1	Feedwater			OWN	-	-	-	-	-	-	-	-	-	-	-	-
				PRE	-	-	-	-	-	-	-	-	-	-	-	-
F-B	101201	ISI/VT/ISI-VT-2.0	ISI-13142-52-A	ISI	-	c	-	-	-	B	-	-	b	-	-	-
F-A,B,C	H- 7		Snubber / Clamp	AUG	-	-	-	-	-	-	-	-	-	-	-	-
1	Feedwater			OWN	-	-	-	-	-	-	-	-	-	-	-	-
				PRE	-	-	-	-	-	-	-	-	-	-	-	-
B-K-1	101203	ISI/VT/ISI-VT-2.0	ISI-13142-52-A	ISI	-	-	-	-	-	-	-	-	s	-	-	-
B10.10	H- 8		Double Spring/4 Lugs	AUG	-	-	-	-	-	-	-	-	-	-	-	-
1	Feedwater			OWN	-	-	-	-	-	-	-	-	-	-	-	-
				PRE	-	-	-	-	-	-	-	-	-	-	-	-

MONTICELLO Nuclear Generating Plant
3rd Interval ISI Plan Rev. 3 June 1, 1992 to May 31, 2002

Category, ItemNO, Class	Summary / CompID / System	Scope / Method / Procedure	Iso No. Comp. Desc. Code Case /Note		Period 1				Period 2				Period 3			
					1	2	3	4	1	2	3	4	1	2	3	4
B-M-2	101204		ISI-13142-52-A	ISI	-	-	-	-	-	-	-	-	-	-	-	-
B12.50	V- 1		Valve Int Surfaces	AUG	-	-	-	-	-	-	-	-	-	-	-	-
1	Feedwater		NOTE: GG, RELIEF 4	OWN	-	-	-	-	-	-	-	-	-	-	-	-
				PRE	-	-	-	-	-	-	-	-	-	-	-	-
B-M-2	101205		ISI-13142-52-A	ISI	-	-	-	-	-	-	-	-	-	-	-	-
B12.50	V- 2		Valve Int Surfaces	AUG	-	-	-	-	-	-	-	-	-	-	-	-
1	Feedwater		NOTE: HH, RELIEF 4	OWN	-	-	-	-	-	-	-	-	-	-	-	-
				PRE	-	-	-	-	-	-	-	-	-	-	-	-
B-M-2	101206		ISI-13142-52-A	ISI	-	-	-	-	-	-	-	-	-	-	-	-
B12.50	V- 3		Valve Int Surfaces	AUG	-	-	-	-	-	-	-	-	-	-	-	-
1	Feedwater		NOTE: GG, RELIEF 4	OWN	-	-	-	-	-	-	-	-	-	-	-	-
				PRE	-	-	-	-	-	-	-	-	-	-	-	-
C-F-2	101207	ISI/UT/ISI-UT-1	ISI-13142-52-A	ISI	-	c	-	-	B	-	-	-	b	b	-	-
C5.51	W- 1	ISI/MT/ISI-MT-1	Valve-to-Tee	AUG	-	-	-	-	-	-	-	-	-	-	-	-
2	Feedwater			OWN	-	-	-	-	-	-	-	-	-	-	-	-
				PRE	-	-	-	-	-	-	-	-	-	-	-	-
C-F-2	101208	ISI/UT/ISI-UT-1	ISI-13142-52-A	ISI	-	c	-	-	B	-	-	-	b	b	-	-
C5.51	W- 2	ISI/MT/ISI-MT-1	Tee-to-Pipe	AUG	-	-	-	-	-	-	-	-	-	-	-	-
2	Feedwater			OWN	-	-	-	-	-	-	-	-	-	-	-	-
				PRE	-	-	-	-	-	-	-	-	-	-	-	-
C-F-2	101209	ISI/UT/ISI-UT-1	ISI-13142-52-A	ISI	-	c	-	-	B	-	-	-	b	b	-	-
C5.51	W- 3	ISI/MT/ISI-MT-1	Pipe-to-Pipe	AUG	-	-	-	-	-	-	-	-	-	-	-	-
2	Feedwater			OWN	-	-	-	-	-	-	-	-	-	-	-	-
				PRE	-	-	-	-	-	-	-	-	-	-	-	-
C-F-2	101210		ISI-13142-52-A	ISI	-	-	-	-	-	-	-	-	-	-	-	-
C5.51	W- 4		Valve-to-Pipe	AUG	-	-	-	-	-	-	-	-	-	-	-	-
2	Feedwater			OWN	-	-	-	-	-	-	-	-	-	-	-	-
				PRE	-	-	-	-	-	-	-	-	-	-	-	-
B-J	101211		ISI-13142-52-A	ISI	-	-	-	-	-	-	-	-	-	-	-	-
B9.11	W- 5		Valve-to-Pipe	AUG	-	-	-	-	-	-	-	-	-	-	-	-
1	Feedwater			OWN	-	-	-	-	-	-	-	-	-	-	-	-
				PRE	-	-	-	-	-	-	-	-	-	-	-	-
B-J	101212	ISI/UT/ISI-UT-1	ISI-13142-52-A	ISI	-	-	-	-	-	-	-	-	s	-	-	-
B9.11	W- 6	ISI/MT/ISI-MT-1	Pipe-to-Pipe	AUG	-	-	-	-	-	-	-	-	-	-	-	-
1	Feedwater			OWN	-	-	-	-	-	-	-	-	-	-	-	-
				PRE	-	-	-	-	-	-	-	-	-	-	-	-
B-J	101213		ISI-13142-52-A	ISI	-	-	-	-	-	-	-	-	-	-	-	-
B9.11	W- 7		Pipe-to-Pipe	AUG	-	-	-	-	-	-	-	-	-	-	-	-
1	Feedwater		NOTE: DD	OWN	-	-	-	-	-	-	-	-	-	-	-	-
				PRE	-	-	-	-	-	-	-	-	-	-	-	-

MONTICELLO Nuclear Generating Plant
3rd Interval ISI Plan Rev. 3 June 1, 1992 to May 31, 2002

Category, ItemNO, Class	Summary / CompID / System	Scope / Method / Procedure	Iso No. Comp. Desc. Code Case /Note		Period 1				Period 2				Period 3			
					1	2	3	4	1	2	3	4	1	2	3	4
B-J	101214		ISI-13142-52-A	ISI	-	-	-	-	-	-	-	-	-	-	-	-
B9.11	W- 8		Pipe-to-Valve	AUG	-	-	-	-	-	-	-	-	-	-	-	-
1	Feedwater			OWN	-	-	-	-	-	-	-	-	-	-	-	-
				PRE	-	-	-	-	-	-	-	-	-	-	-	-
B-J	101215	ISI/MT/ISI-MT-1	ISI-13142-52-A	ISI	-	c	-	-	-	-	-	-	-	-	-	-
B9.11	W- 9	ISI/UT/ISI-UT-1	Valve-to-Elbow	AUG	-	-	-	-	-	-	-	-	-	-	-	-
1	Feedwater			OWN	-	-	-	-	-	-	-	-	-	-	-	-
				PRE	-	-	-	-	-	-	-	-	-	-	-	-
B-J	101216	ISI/MT/ISI-MT-1	ISI-13142-52-A	ISI	-	c	-	-	-	-	-	-	-	-	-	-
B9.11	W-10	ISI/UT/ISI-UT-1	Elbow-to-Valve	AUG	-	-	-	-	-	-	-	-	-	-	-	-
1	Feedwater			OWN	-	-	-	-	-	-	-	-	-	-	-	-
				PRE	-	-	-	-	-	-	-	-	-	-	-	-
B-J	101217		ISI-13142-52-A	ISI	-	-	-	-	-	-	-	-	-	-	-	-
B9.11	W-11		Valve-to-Pipe	AUG	-	-	-	-	-	-	-	-	-	-	-	-
1	Feedwater			OWN	-	-	-	-	-	-	-	-	-	-	-	-
				PRE	-	-	-	-	-	-	-	-	-	-	-	-
B-J	101218		ISI-13142-52-A	ISI	-	-	-	-	-	-	-	-	-	-	-	-
B9.11	W-12		Pipe-to-Elbow	AUG	-	-	-	-	-	-	-	-	-	-	-	-
1	Feedwater			OWN	-	-	-	-	-	-	-	-	-	-	-	-
				PRE	-	-	-	-	-	-	-	-	-	-	-	-
B-J	101219		ISI-13142-52-A	ISI	-	-	-	-	-	-	-	-	-	-	-	-
B9.11	W-13		Elbow-to-Pipe	AUG	-	-	-	-	-	-	-	-	-	-	-	-
1	Feedwater			OWN	-	-	-	-	-	-	-	-	-	-	-	-
				PRE	-	-	-	-	-	-	-	-	-	-	-	-
B-J	101220		ISI-13142-52-A	ISI	-	-	-	-	-	-	-	-	-	-	-	-
B9.11	W-14		Pipe-to-Tee	AUG	-	-	-	-	-	-	-	-	-	-	-	-
1	Feedwater			OWN	-	-	-	-	-	-	-	-	-	-	-	-
				PRE	-	-	-	-	-	-	-	-	-	-	-	-
B-J	101221		ISI-13142-52-A	ISI	-	-	-	-	-	-	-	-	-	-	-	-
B9.11	W-15		Tee-to-Elbow	AUG	-	-	-	-	-	-	-	-	-	-	-	-
1	Feedwater			OWN	-	-	-	-	-	-	-	-	-	-	-	-
				PRE	-	-	-	-	-	-	-	-	-	-	-	-
B-J	101222		ISI-13142-52-A	ISI	-	-	-	-	-	-	-	-	-	-	-	-
B9.11	W-16		Elbow-to-Pipe	AUG	-	-	-	-	-	-	-	-	-	-	-	-
1	Feedwater			OWN	-	-	-	-	-	-	-	-	-	-	-	-
				PRE	-	-	-	-	-	-	-	-	-	-	-	-
B-J	101223		ISI-13142-52-A	ISI	-	-	-	-	-	-	-	-	-	-	-	-
B9.11	W-17		Pipe-to-Elbow	AUG	-	-	-	-	-	-	-	-	-	-	-	-
1	Feedwater			OWN	-	-	-	-	-	-	-	-	-	-	-	-
				PRE	-	-	-	-	-	-	-	-	-	-	-	-

MONTICELLO Nuclear Generating Plant
3rd Interval ISI Plan Rev. 3 June 1, 1992 to May 31, 2002

Category, ItemNO, Class	Summary / CompID / System	Scope / Method / Procedure	Iso No. Comp. Desc. Code Case /Note		Period 1				Period 2				Period 3			
					1	2	3	4	1	2	3	4	1	2	3	4
B-J	101224		ISI-13142-52-A	ISI	-	-	-	-	-	-	-	-	-	-	-	-
B9.11	W-18		Elbow-to-Pipe	AUG	-	-	-	-	-	-	-	-	-	-	-	-
1	Feedwater			OWN	-	-	-	-	-	-	-	-	-	-	-	-
				PRE	-	-	-	-	-	-	-	-	-	-	-	-
B-J	101225		ISI-13142-52-A	ISI	-	-	-	-	-	-	-	-	-	-	-	-
B9.11	W-19		Pipe-to-Pipe	AUG	-	-	-	-	-	-	-	-	-	-	-	-
1	Feedwater			OWN	-	-	-	-	-	-	-	-	-	-	-	-
				PRE	-	-	-	-	-	-	-	-	-	-	-	-
B-J	101226		ISI-13142-52-A	ISI	-	-	-	-	-	-	-	-	-	-	-	-
B9.11	W-20		Pipe-to-Pipe	AUG	-	-	-	-	-	-	-	-	-	-	-	-
1	Feedwater			OWN	-	-	-	-	-	-	-	-	-	-	-	-
				PRE	-	-	-	-	-	-	-	-	-	-	-	-
B-J	101227	ISI/MT/ISI-MT-1	ISI-13142-52-A	ISI	c	-	-	-	-	-	-	-	-	-	-	-
B9.11	W-21	ISI/UT/ISI-UT-1	Pipe-to-Elbow	AUG	-	-	-	-	-	-	-	-	-	-	-	-
1	Feedwater			OWN	-	-	-	-	-	-	-	-	-	-	-	-
				PRE	-	-	-	-	-	-	-	-	-	-	-	-
B-J	101228	ISI/MT/ISI-MT-1	ISI-13142-52-A	ISI	c	-	-	-	-	-	-	-	-	-	-	-
B9.11	W-22	ISI/UT/ISI-UT-1	Elbow-to-Pipe	AUG	-	-	-	-	-	-	-	-	-	-	-	-
1	Feedwater			OWN	-	-	-	-	-	-	-	-	-	-	-	-
				PRE	-	-	-	-	-	-	-	-	-	-	-	-
B-J	101229	ISI/MT/ISI-MT-1	ISI-13142-52-A	ISI	c	-	-	-	-	-	-	-	-	-	-	-
B9.11	W-23	ISI/UT/ISI-UT-1	Pipe-to-Safe End	AUG	-	-	-	-	-	-	-	-	-	-	-	-
1	Feedwater			OWN	-	-	-	-	-	-	-	-	-	-	-	-
				PRE	-	-	-	-	-	-	-	-	-	-	-	-
B-J	101230	ISI/MT/ISI-MT-1	ISI-13142-52-A	ISI	c	-	-	-	-	-	-	-	-	-	-	-
B9.11	W-24	ISI/UT/ISI-UT-1	New S.E.-to-Old S.E.	AUG	-	-	-	-	-	-	-	-	-	-	-	-
1	Feedwater			OWN	-	-	-	-	-	-	-	-	-	-	-	-
				PRE	-	-	-	-	-	-	-	-	-	-	-	-
B-J	101231	ISI/MT/ISI-MT-1	ISI-13142-52-A	ISI	c	-	-	-	-	-	-	-	-	-	-	-
B9.11	W-25	ISI/UT/ISI-UT-1	Safe End-to-Nozzle	AUG	-	-	-	-	-	-	-	-	-	-	-	-
1	Feedwater			OWN	-	-	-	-	-	-	-	-	-	-	-	-
				PRE	-	-	-	-	-	-	-	-	-	-	-	-
B-J	101232		ISI-13142-52-A	ISI	-	-	-	-	-	-	-	-	-	-	-	-
B9.11	W-26		Tee-to-Reducer	AUG	-	-	-	-	-	-	-	-	-	-	-	-
1	Feedwater			OWN	-	-	-	-	-	-	-	-	-	-	-	-
				PRE	-	-	-	-	-	-	-	-	-	-	-	-
B-J	101233		ISI-13142-52-A	ISI	-	-	-	-	-	-	-	-	-	-	-	-
B9.11	W-27		Reducer-to-Pipe	AUG	-	-	-	-	-	-	-	-	-	-	-	-
1	Feedwater			OWN	-	-	-	-	-	-	-	-	-	-	-	-
				PRE	-	-	-	-	-	-	-	-	-	-	-	-

MONTICELLO Nuclear Generating Plant
3rd Interval ISI Plan Rev. 3 June 1, 1992 to May 31, 2002

Category, ItemNO, Class	Summary / CompID / System	Scope / Method / Procedure	Iso No. Comp. Desc. Code Case /Note		Period 1				Period 2				Period 3			
					1	2	3	4	1	2	3	4	1	2	3	4
B-J	101234		ISI-13142-52-A	ISI	-	-	-	-	-	-	-	-	-	-	-	-
B9.11	W-28		Pipe-to-Pipe	AUG	-	-	-	-	-	-	-	-	-	-	-	-
1	Feedwater			OWN	-	-	-	-	-	-	-	-	-	-	-	-
				PRE	-	-	-	-	-	-	-	-	-	-	-	-
B-J	101235		ISI-13142-52-A	ISI	-	-	-	-	-	-	-	-	-	-	-	-
B9.11	W-29		Pipe-to-Elbow	AUG	-	-	-	-	-	-	-	-	-	-	-	-
1	Feedwater			OWN	-	-	-	-	-	-	-	-	-	-	-	-
				PRE	-	-	-	-	-	-	-	-	-	-	-	-
B-J	101236		ISI-13142-52-A	ISI	-	-	-	-	-	-	-	-	-	-	-	-
B9.11	W-30		Elbow-to-Elbow	AUG	-	-	-	-	-	-	-	-	-	-	-	-
1	Feedwater			OWN	-	-	-	-	-	-	-	-	-	-	-	-
				PRE	-	-	-	-	-	-	-	-	-	-	-	-
B-J	101237		ISI-13142-52-A	ISI	-	-	-	-	-	-	-	-	-	-	-	-
B9.11	W-31		Elbow-to-Pipe	AUG	-	-	-	-	-	-	-	-	-	-	-	-
1	Feedwater			OWN	-	-	-	-	-	-	-	-	-	-	-	-
				PRE	-	-	-	-	-	-	-	-	-	-	-	-
B-J	101238		ISI-13142-52-A	ISI	-	-	-	-	-	-	-	-	-	-	-	-
B9.11	W-32		Pipe-to-Elbow	AUG	-	-	-	-	-	-	-	-	-	-	-	-
1	Feedwater			OWN	-	-	-	-	-	-	-	-	-	-	-	-
				PRE	-	-	-	-	-	-	-	-	-	-	-	-
B-J	101239		ISI-13142-52-A	ISI	-	-	-	-	-	-	-	-	-	-	-	-
B9.11	W-33		Elbow-to-Pipe	AUG	-	-	-	-	-	-	-	-	-	-	-	-
1	Feedwater			OWN	-	-	-	-	-	-	-	-	-	-	-	-
				PRE	-	-	-	-	-	-	-	-	-	-	-	-
B-J	101240		ISI-13142-52-A	ISI	-	-	-	-	-	-	-	-	-	-	-	-
B9.11	W-34		Pipe-to-Pipe	AUG	-	-	-	-	-	-	-	-	-	-	-	-
1	Feedwater			OWN	-	-	-	-	-	-	-	-	-	-	-	-
				PRE	-	-	-	-	-	-	-	-	-	-	-	-
B-J	101241		ISI-13142-52-A	ISI	-	-	-	-	-	-	-	-	-	-	-	-
B9.11	W-35		Pipe-to-Elbow	AUG	-	-	-	-	-	-	-	-	-	-	-	-
1	Feedwater			OWN	-	-	-	-	-	-	-	-	-	-	-	-
				PRE	-	-	-	-	-	-	-	-	-	-	-	-
B-J	101242		ISI-13142-52-A	ISI	-	-	-	-	-	-	-	-	-	-	-	-
B9.11	W-36		Elbow-to-Pipe	AUG	-	-	-	-	-	-	-	-	-	-	-	-
1	Feedwater			OWN	-	-	-	-	-	-	-	-	-	-	-	-
				PRE	-	-	-	-	-	-	-	-	-	-	-	-
B-J	101243		ISI-13142-52-A	ISI	-	-	-	-	-	-	-	-	-	-	-	-
B9.11	W-37		Pipe-to-New Safe End	AUG	-	-	-	-	-	-	-	-	-	-	-	-
1	Feedwater			OWN	-	-	-	-	-	-	-	-	-	-	-	-
				PRE	-	-	-	-	-	-	-	-	-	-	-	-

MONTICELLO Nuclear Generating Plant
3rd Interval ISI Plan Rev. 3 June 1, 1992 to May 31, 2002

Category, ItemNO, Class	Summary / CompID / System	Scope / Method / Procedure	Iso No. Comp. Desc. Code Case /Note		Period 1				Period 2				Period 3			
					1	2	3	4	1	2	3	4	1	2	3	4
B-J	101244		ISI-13142-52-A	ISI	-	-	-	-	-	-	-	-	-	-	-	-
B9.11	W-38		New S.E.-to-Old S.E.	AUG	-	-	-	-	-	-	-	-	-	-	-	-
1	Feedwater			OWN	-	-	-	-	-	-	-	-	-	-	-	-
				PRE	-	-	-	-	-	-	-	-	-	-	-	-
B-J	101245		ISI-13142-52-A	ISI	-	-	-	-	-	-	-	-	-	-	-	-
B9.11	W-39		Safe End-to-Nozzle	AUG	-	-	-	-	-	-	-	-	-	-	-	-
1	Feedwater			OWN	-	-	-	-	-	-	-	-	-	-	-	-
				PRE	-	-	-	-	-	-	-	-	-	-	-	-
B-G-2	101246	ISI/VT/ISI-VT-1.0	ISI-13142-53-A	ISI	-	-	-	-	-	c	-	-	-	-	-	-
B7.70	B- 1		Valve Bolts	AUG	-	-	-	-	-	-	-	-	-	-	-	-
1	Feedwater			OWN	-	-	-	-	-	-	-	-	-	-	-	-
				PRE	-	-	-	-	-	-	-	-	-	-	-	-
B-G-2	101247	ISI/VT/ISI-VT-1.0	ISI-13142-53-A	ISI	-	-	-	-	-	c	-	-	-	-	-	-
B7.70	B- 2		Valve Bolts	AUG	-	-	-	-	-	-	-	-	-	-	-	-
1	Feedwater			OWN	-	-	-	-	-	-	-	-	-	-	-	-
				PRE	-	-	-	-	-	-	-	-	-	-	-	-
B-G-2	101248	ISI/VT/ISI-VT-1.0	ISI-13142-53-A	ISI	-	-	-	-	-	-	-	-	-	s	-	-
B7.70	B- 3		Valve Bolts	AUG	-	-	-	-	-	-	-	-	-	-	-	-
1	Feedwater			OWN	-	-	-	-	-	-	-	-	-	-	-	-
				PRE	-	-	-	-	-	-	-	-	-	-	-	-
F-C	101249	ISI/VT/ISI-VT-2.0	ISI-13142-53-A	ISI	-	-	-	-	-	c	-	-	-	-	-	-
F-A,B,C	H- 1		Spring	AUG	-	-	-	-	-	-	-	-	-	-	-	-
1	Feedwater			OWN	-	-	-	-	-	-	-	-	-	-	-	-
				PRE	-	-	-	-	-	-	-	-	-	-	-	-
F-C	101250	ISI/VT/ISI-VT-2.0	ISI-13142-53-A	ISI	-	-	-	-	-	c	-	-	-	-	-	-
F-A,B,C	H- 2		Variable / Spring	AUG	-	-	-	-	-	-	-	-	-	-	-	-
1	Feedwater			OWN	-	-	-	-	-	-	-	-	-	-	-	-
				PRE	-	-	-	-	-	-	-	-	-	-	-	-
B-K-1	101251	ISI/MT/ISI-MT-1	ISI-13142-53-A	ISI	-	-	-	-	-	c	-	-	-	b	-	-
B10.10	H- 3	ISI/VT/ISI-VT-2.0	Double Spring/4 Lugs	AUG	-	-	-	-	-	-	-	-	-	-	-	-
1	Feedwater			OWN	-	-	-	-	-	-	-	-	-	-	-	-
				PRE	-	-	-	-	-	-	-	-	-	-	-	-
F-B	101252	ISI/VT/ISI-VT-2.0	ISI-13142-53-A	ISI	-	-	-	-	-	c	-	-	-	-	-	-
F-A,B,C	H- 4		Snubber / Clamp	AUG	-	-	-	-	-	-	-	-	-	-	-	-
1	Feedwater			OWN	-	-	-	-	-	-	-	-	-	-	-	-
				PRE	-	-	-	-	-	-	-	-	-	-	-	-
F-B	101253	ISI/VT/ISI-VT-2.0	ISI-13142-53-A	ISI	c	B	-	-	-	B	-	-	-	-	-	-
F-A,B,C	H- 5		Snubber / Clamp	AUG	-	-	-	-	-	-	-	-	-	-	-	-
1	Feedwater			OWN	-	-	-	-	-	-	-	-	-	-	-	-
				PRE	-	-	-	-	-	-	-	-	-	-	-	-

MONTICELLO Nuclear Generating Plant
3rd Interval ISI Plan Rev. 3 June 1, 1992 to May 31, 2002

Category, ItemNO, Class	Summary / CompID / System	Scope / Method / Procedure	Iso No. Comp. Desc. Code Case /Note		Period 1				Period 2				Period 3			
					1	2	3	4	1	2	3	4	1	2	3	4
F-C	101254	ISI/VT/ISI-VT-2.0	ISI-13142-53-A	ISI	c	-	-	-	-	-	-	-	-	-	-	-
F-A,B,C	H- 6		Spring / Clamp	AUG	-	-	-	-	-	-	-	-	-	-	-	-
1	Feedwater			OWN	-	-	-	-	-	-	-	-	-	-	-	-
				PRE	-	-	-	-	-	-	-	-	-	-	-	-
F-B	101255	ISI/VT/ISI-VT-2.0	ISI-13142-53-A	ISI	c	B	-	-	-	B	-	-	-	-	-	-
F-A,B,C	H- 7		Snubber / Clamp	AUG	-	-	-	-	-	-	-	-	-	-	-	-
1	Feedwater			OWN	-	-	-	-	-	-	-	-	-	-	-	-
				PRE	-	-	-	-	-	-	-	-	-	-	-	-
B-K-1	101256	ISI/MT/ISI-MT-1	ISI-13142-53-A	ISI	-	-	-	-	-	c	-	-	-	-	-	-
B10.10	H- 8	ISI/VT/ISI-VT-2.0	Double Spring/4 Lugs	AUG	-	-	-	-	-	-	-	-	-	-	-	-
1	Feedwater			OWN	-	-	-	-	-	-	-	-	-	-	-	-
				PRE	-	-	-	-	-	-	-	-	-	-	-	-
B-M-2	101257		ISI-13142-53-A	ISI	-	-	-	-	-	-	-	-	-	-	-	-
B12.50	V- 1		Valve Int Surfaces	AUG	-	-	-	-	-	-	-	-	-	-	-	-
1	Feedwater		NOTE: HH, RELIEF 4	OWN	-	-	-	-	-	-	-	-	-	-	-	-
				PRE	-	-	-	-	-	-	-	-	-	-	-	-
B-M-2	101258		ISI-13142-53-A	ISI	-	-	-	-	-	-	-	-	-	-	-	-
B12.50	V- 2		Valve Int Surfaces	AUG	-	-	-	-	-	-	-	-	-	-	-	-
1	Feedwater		NOTE: GG, RELIEF 4	OWN	-	-	-	-	-	-	-	-	-	-	-	-
				PRE	-	-	-	-	-	-	-	-	-	-	-	-
B-M-2	101259	ISI/VT/ISI-VT-3.0	ISI-13142-53-A	ISI	c	-	-	-	-	-	-	-	-	-	-	-
B12.50	V- 3		Valve Int Surfaces	AUG	-	-	-	-	-	-	-	-	-	-	-	-
1	Feedwater		NOTE: GG, RELIEF 4	OWN	-	-	-	-	-	-	-	-	-	-	-	-
				PRE	-	-	-	-	-	-	-	-	-	-	-	-
C-F-2	101260	ISI/UT/ISI-UT-1	ISI-13142-53-A	ISI	-	c	-	-	B	-	-	-	b	b	-	-
C5.51	W- 1	ISI/MT/ISI-MT-1	Valve-to-Tee	AUG	-	-	-	-	-	-	-	-	-	-	-	-
2	Feedwater			OWN	-	-	-	-	-	-	-	-	-	-	-	-
				PRE	-	-	-	-	-	-	-	-	-	-	-	-
C-F-2	101261	ISI/UT/ISI-UT-1	ISI-13142-53-A	ISI	-	c	-	-	B	-	-	-	b	b	-	-
C5.51	W- 2	ISI/MT/ISI-MT-1	Tee-to-Pipe	AUG	-	-	-	-	-	-	-	-	-	-	-	-
2	Feedwater			OWN	-	-	-	-	-	-	-	-	-	-	-	-
				PRE	-	-	-	-	-	-	-	-	-	-	-	-
C-F-2	101262	ISI/UT/ISI-UT-1	ISI-13142-53-A	ISI	-	c	-	-	B	-	-	-	b	b	-	-
C5.51	W- 3	ISI/MT/ISI-MT-1	Pipe-to-Pipe	AUG	-	-	-	-	-	-	-	-	-	-	-	-
2	Feedwater			OWN	-	-	-	-	-	-	-	-	-	-	-	-
				PRE	-	-	-	-	-	-	-	-	-	-	-	-
C-F-2	101263		ISI-13142-53-A	ISI	-	-	-	-	-	-	-	-	-	-	-	-
C5.51	W- 4		Pipe-to-Valve	AUG	-	-	-	-	-	-	-	-	-	-	-	-
2	Feedwater			OWN	-	-	-	-	-	-	-	-	-	-	-	-
				PRE	-	-	-	-	-	-	-	-	-	-	-	-

MONTICELLO Nuclear Generating Plant
3rd Interval ISI Plan Rev. 3 June 1, 1992 to May 31, 2002

Category, ItemNO, Class	Summary / CompID / System	Scope / Method / Procedure	Iso No. Comp. Desc. Code Case /Note		Period 1				Period 2				Period 3			
					1	2	3	4	1	2	3	4	1	2	3	4
B-J	101264		ISI-13142-53-A	ISI	-	-	-	-	-	-	-	-	-	-	-	-
B9.11	W- 5		Valve-to-Pipe	AUG	-	-	-	-	-	-	-	-	-	-	-	-
1	Feedwater			OWN	-	-	-	-	-	-	-	-	-	-	-	-
				PRE	-	-	-	-	-	-	-	-	-	-	-	-
B-J	101265	ISI/MT/ISI-MT-1	ISI-13142-53-A	ISI	-	-	-	-	-	-	-	-	-	s	-	-
B9.11	W- 6	ISI/UT/ISI-UT-1	Pipe-to-Pipe	AUG	-	-	-	-	-	-	-	-	-	-	-	-
1	Feedwater			OWN	-	-	-	-	-	-	-	-	-	-	-	-
				PRE	-	-	-	-	-	-	-	-	-	-	-	-
B-J	101266		ISI-13142-53-A	ISI	-	-	-	-	-	-	-	-	-	-	-	-
B9.11	W- 7		Pipe-to-Pipe	AUG	-	-	-	-	-	-	-	-	-	-	-	-
1	Feedwater		NOTE: DD	OWN	-	-	-	-	-	-	-	-	-	-	-	-
				PRE	-	-	-	-	-	-	-	-	-	-	-	-
B-J	101267		ISI-13142-53-A	ISI	-	-	-	-	-	-	-	-	-	-	-	-
B9.11	W- 8		Pipe-to-Valve	AUG	-	-	-	-	-	-	-	-	-	-	-	-
1	Feedwater			OWN	-	-	-	-	-	-	-	-	-	-	-	-
				PRE	-	-	-	-	-	-	-	-	-	-	-	-
B-J	101268		ISI-13142-53-A	ISI	-	-	-	-	-	-	-	-	-	-	-	-
B9.11	W- 9		Valve-to-Elbow	AUG	-	-	-	-	-	-	-	-	-	-	-	-
1	Feedwater			OWN	-	-	-	-	-	-	-	-	-	-	-	-
				PRE	-	-	-	-	-	-	-	-	-	-	-	-
B-J	101269		ISI-13142-53-A	ISI	-	-	-	-	-	-	-	-	-	-	-	-
B9.11	W-10		Elbow-to-Valve	AUG	-	-	-	-	-	-	-	-	-	-	-	-
1	Feedwater			OWN	-	-	-	-	-	-	-	-	-	-	-	-
				PRE	-	-	-	-	-	-	-	-	-	-	-	-
B-J	101270		ISI-13142-53-A	ISI	-	-	-	-	-	-	-	-	-	-	-	-
B9.11	W-11		Valve-to-Pipe	AUG	-	-	-	-	-	-	-	-	-	-	-	-
1	Feedwater			OWN	-	-	-	-	-	-	-	-	-	-	-	-
				PRE	-	-	-	-	-	-	-	-	-	-	-	-
B-J	101271		ISI-13142-53-A	ISI	-	-	-	-	-	-	-	-	-	-	-	-
B9.11	W-12		Pipe-to-Elbow	AUG	-	-	-	-	-	-	-	-	-	-	-	-
1	Feedwater			OWN	-	-	-	-	-	-	-	-	-	-	-	-
				PRE	-	-	-	-	-	-	-	-	-	-	-	-
B-J	101272		ISI-13142-53-A	ISI	-	-	-	-	-	-	-	-	-	-	-	-
B9.11	W-13		Elbow-to-Pipe	AUG	-	-	-	-	-	-	-	-	-	-	-	-
1	Feedwater			OWN	-	-	-	-	-	-	-	-	-	-	-	-
				PRE	-	-	-	-	-	-	-	-	-	-	-	-
B-J	101273		ISI-13142-53-A	ISI	-	-	-	-	-	-	-	-	-	-	-	-
B9.11	W-14		Pipe-to-Tee	AUG	-	-	-	-	-	-	-	-	-	-	-	-
1	Feedwater			OWN	-	-	-	-	-	-	-	-	-	-	-	-
				PRE	-	-	-	-	-	-	-	-	-	-	-	-

MONTICELLO Nuclear Generating Plant
3rd Interval ISI Plan Rev. 3 June 1, 1992 to May 31, 2002

Category, ItemNO, Class	Summary / CompID / System	Scope / Method / Procedure	Iso No. Comp. Desc. Code Case /Note		Period 1				Period 2				Period 3			
					1	2	3	4	1	2	3	4	1	2	3	4
B-J	101274	ISI/MT/ISI-MT-1	ISI-13142-53-A	ISI	-	-	-	-	-	c	-	-	-	-	-	-
B9.11	W-15	ISI/UT/ISI-UT-1	Tee-to-Elbow	AUG	-	-	-	-	-	-	-	-	-	-	-	-
1	Feedwater			OWN	-	-	-	-	-	-	-	-	-	-	-	-
				PRE	-	-	-	-	-	-	-	-	-	-	-	-
B-J	101275		ISI-13142-53-A	ISI	-	-	-	-	-	-	-	-	-	-	-	-
B9.11	W-16		Elbow-to-Pipe	AUG	-	-	-	-	-	-	-	-	-	-	-	-
1	Feedwater			OWN	-	-	-	-	-	-	-	-	-	-	-	-
				PRE	-	-	-	-	-	-	-	-	-	-	-	-
B-J	101276		ISI-13142-53-A	ISI	-	-	-	-	-	-	-	-	-	-	-	-
B9.11	W-17		Pipe-to-Elbow	AUG	-	-	-	-	-	-	-	-	-	-	-	-
1	Feedwater			OWN	-	-	-	-	-	-	-	-	-	-	-	-
				PRE	-	-	-	-	-	-	-	-	-	-	-	-
B-J	101277	ISI/MT/ISI-MT-1	ISI-13142-53-A	ISI	-	-	-	-	-	-	-	-	-	s	-	-
B9.11	W-18	ISI/UT/ISI-UT-1	Elbow-to-Pipe	AUG	-	-	-	-	-	-	-	-	-	-	-	-
1	Feedwater			OWN	-	-	-	-	-	-	-	-	-	-	-	-
				PRE	-	-	-	-	-	-	-	-	-	-	-	-
B-J	101278		ISI-13142-53-A	ISI	-	-	-	-	-	-	-	-	-	-	-	-
B9.11	W-19		Pipe-to-Pipe	AUG	-	-	-	-	-	-	-	-	-	-	-	-
1	Feedwater			OWN	-	-	-	-	-	-	-	-	-	-	-	-
				PRE	-	-	-	-	-	-	-	-	-	-	-	-
B-J	101279		ISI-13142-53-A	ISI	-	-	-	-	-	-	-	-	-	-	-	-
B9.11	W-20		Pipe-to-Pipe	AUG	-	-	-	-	-	-	-	-	-	-	-	-
1	Feedwater			OWN	-	-	-	-	-	-	-	-	-	-	-	-
				PRE	-	-	-	-	-	-	-	-	-	-	-	-
B-J	101280		ISI-13142-53-A	ISI	-	-	-	-	-	-	-	-	-	-	-	-
B9.11	W-21		Pipe-to-Elbow	AUG	-	-	-	-	-	-	-	-	-	-	-	-
1	Feedwater			OWN	-	-	-	-	-	-	-	-	-	-	-	-
				PRE	-	-	-	-	-	-	-	-	-	-	-	-
B-J	101281	ISI/MT/ISI-MT-1	ISI-13142-53-A	ISI	-	-	-	-	-	-	-	-	-	s	-	-
B9.11	W-22	ISI/UT/ISI-UT-1	Elbow-to-Pipe	AUG	-	-	-	-	-	-	-	-	-	-	-	-
1	Feedwater			OWN	-	-	-	-	-	-	-	-	-	-	-	-
				PRE	-	-	-	-	-	-	-	-	-	-	-	-
B-J	101282		ISI-13142-53-A	ISI	-	-	-	-	-	-	-	-	-	-	-	-
B9.11	W-23		Pipe-to-Safe End	AUG	-	-	-	-	-	-	-	-	-	-	-	-
1	Feedwater			OWN	-	-	-	-	-	-	-	-	-	-	-	-
				PRE	-	-	-	-	-	-	-	-	-	-	-	-
B-J	101283		ISI-13142-53-A	ISI	-	-	-	-	-	-	-	-	-	-	-	-
B9.11	W-24		New SafeEnd/Safe End	AUG	-	-	-	-	-	-	-	-	-	-	-	-
1	Feedwater			OWN	-	-	-	-	-	-	-	-	-	-	-	-
				PRE	-	-	-	-	-	-	-	-	-	-	-	-

MONTICELLO Nuclear Generating Plant
3rd Interval ISI Plan Rev. 3 June 1, 1992 to May 31, 2002

Category, ItemNO, Class	Summary / CompID / System	Scope / Method / Procedure	Iso No. Comp. Desc. Code Case /Note		Period 1				Period 2				Period 3			
					1	2	3	4	1	2	3	4	1	2	3	4
B-J	101284		ISI-13142-53-A	ISI	-	-	-	-	-	-	-	-	-	-	-	-
B9.11	W-25		Safe End-to-Nozzle	AUG	-	-	-	-	-	-	-	-	-	-	-	-
1	Feedwater			OWN	-	-	-	-	-	-	-	-	-	-	-	-
				PRE	-	-	-	-	-	-	-	-	-	-	-	-
B-J	101285		ISI-13142-53-A	ISI	-	-	-	-	-	-	-	-	-	-	-	-
B9.11	W-26		Tee-to-Reducer	AUG	-	-	-	-	-	-	-	-	-	-	-	-
1	Feedwater			OWN	-	-	-	-	-	-	-	-	-	-	-	-
				PRE	-	-	-	-	-	-	-	-	-	-	-	-
B-J	101286	ISI/MT/ISI-MT-1	ISI-13142-53-A	ISI	-	-	-	-	-	C	-	-	-	-	-	-
B9.11	W-27	ISI/UT/ISI-UT-1	Reducer-to-Pipe	AUG	-	-	-	-	-	-	-	-	-	-	-	-
1	Feedwater			OWN	-	-	-	-	-	-	-	-	-	-	-	-
				PRE	-	-	-	-	-	-	-	-	-	-	-	-
B-J	101287	ISI/MT/ISI-MT-1	ISI-13142-53-A	ISI	C	-	-	-	-	-	-	-	-	-	-	-
B9.11	W-28	ISI/UT/ISI-UT-1	Pipe-to-Pipe	AUG	-	-	-	-	-	-	-	-	-	-	-	-
1	Feedwater			OWN	-	-	-	-	-	-	-	-	-	-	-	-
				PRE	-	-	-	-	-	-	-	-	-	-	-	-
B-J	101288		ISI-13142-53-A	ISI	-	-	-	-	-	-	-	-	-	-	-	-
B9.11	W-29		Pipe-to-Elbow	AUG	-	-	-	-	-	-	-	-	-	-	-	-
1	Feedwater			OWN	-	-	-	-	-	-	-	-	-	-	-	-
				PRE	-	-	-	-	-	-	-	-	-	-	-	-
B-J	101289		ISI-13142-53-A	ISI	-	-	-	-	-	-	-	-	-	-	-	-
B9.11	W-30		Elbow-to-Elbow	AUG	-	-	-	-	-	-	-	-	-	-	-	-
1	Feedwater			OWN	-	-	-	-	-	-	-	-	-	-	-	-
				PRE	-	-	-	-	-	-	-	-	-	-	-	-
B-J	101290		ISI-13142-53-A	ISI	-	-	-	-	-	-	-	-	-	-	-	-
B9.11	W-31		Elbow-to-Pipe	AUG	-	-	-	-	-	-	-	-	-	-	-	-
1	Feedwater			OWN	-	-	-	-	-	-	-	-	-	-	-	-
				PRE	-	-	-	-	-	-	-	-	-	-	-	-
B-J	101291	ISI/MT/ISI-MT-1	ISI-13142-53-A	ISI	C	-	-	-	-	-	-	-	-	-	-	-
B9.11	W-32	ISI/UT/ISI-UT-1	Pipe-to-Elbow	AUG	-	-	-	-	-	-	-	-	-	-	-	-
1	Feedwater			OWN	-	-	-	-	-	-	-	-	-	-	-	-
				PRE	-	-	-	-	-	-	-	-	-	-	-	-
B-J	101292	ISI/MT/ISI-MT-1	ISI-13142-53-A	ISI	C	-	-	-	-	-	-	-	-	-	-	-
B9.11	W-33	ISI/UT/ISI-UT-1	Elbow-to-Pipe	AUG	-	-	-	-	-	-	-	-	-	-	-	-
1	Feedwater			OWN	-	-	-	-	-	-	-	-	-	-	-	-
				PRE	-	-	-	-	-	-	-	-	-	-	-	-
B-J	101293	ISI/MT/ISI-MT-1	ISI-13142-53-A	ISI	-	-	-	-	-	C	-	-	-	-	-	-
B9.11	W-34	ISI/UT/ISI-UT-1	Pipe-to-Pipe	AUG	-	-	-	-	-	-	-	-	-	-	-	-
1	Feedwater			OWN	-	-	-	-	-	-	-	-	-	-	-	-
				PRE	-	-	-	-	-	-	-	-	-	-	-	-

MONTICELLO Nuclear Generating . .ant
3rd Interval ISI Plan Rev. 3 June 1, 1992 to May 31, 2002

Category, ItemNO, Class	Summary / CompID / System	Scope / Method / Procedure	Iso No. Comp. Desc. Code Case /Note		Period 1				Period 2				Period 3			
					1	2	3	4	1	2	3	4	1	2	3	4
B-J	101294		ISI-13142-53-A	ISI	-	-	-	-	-	-	-	-	-	-	-	-
B9.11	W-35		Pipe-to-Elbow	AUG	-	-	-	-	-	-	-	-	-	-	-	-
1	Feedwater			OWN	-	-	-	-	-	-	-	-	-	-	-	-
				PRE	-	-	-	-	-	-	-	-	-	-	-	-
B-J	101295		ISI-13142-53-A	ISI	-	-	-	-	-	-	-	-	-	-	-	-
B9.11	W-36		Elbow-to-Pipe	AUG	-	-	-	-	-	-	-	-	-	-	-	-
1	Feedwater			OWN	-	-	-	-	-	-	-	-	-	-	-	-
				PRE	-	-	-	-	-	-	-	-	-	-	-	-
B-J	101296		ISI-13142-53-A	ISI	-	-	-	-	-	-	-	-	-	-	-	-
B9.11	W-37		Pipe-to-New Safe End	AUG	-	-	-	-	-	-	-	-	-	-	-	-
1	Feedwater			OWN	-	-	-	-	-	-	-	-	-	-	-	-
				PRE	-	-	-	-	-	-	-	-	-	-	-	-
B-J	101297		ISI-13142-53-A	ISI	-	-	-	-	-	-	-	-	-	-	-	-
B9.11	W-38		New S.E.-to- S.E.	AUG	-	-	-	-	-	-	-	-	-	-	-	-
1	Feedwater			OWN	-	-	-	-	-	-	-	-	-	-	-	-
				PRE	-	-	-	-	-	-	-	-	-	-	-	-
B-J	101298		ISI-13142-53-A	ISI	-	-	-	-	-	-	-	-	-	-	-	-
B9.11	W-39		Safe End-to-Nozzle	AUG	-	-	-	-	-	-	-	-	-	-	-	-
1	Feedwater			OWN	-	-	-	-	-	-	-	-	-	-	-	-
				PRE	-	-	-	-	-	-	-	-	-	-	-	-
C-F-2	101299		ISI-13142-62	ISI	-	-	-	-	-	-	-	-	-	-	-	-
CX.XX	W- 1		Valve-to-Flange	AUG	-	-	-	-	-	-	-	-	-	-	-	-
2	FUEL POOL EMERGENCY COOLING			OWN	-	-	-	-	-	-	-	-	-	-	-	-
				PRE	-	-	-	-	-	-	-	-	-	-	-	-
C-F-2	101301		ISI-13142-62	ISI	-	-	-	-	-	-	-	-	-	-	-	-
CX.XX	W- 2		Flange-to-Elbow	AUG	-	-	-	-	-	-	-	-	-	-	-	-
2	FUEL POOL EMERGENCY COOLING			OWN	-	-	-	-	-	-	-	-	-	-	-	-
				PRE	-	-	-	-	-	-	-	-	-	-	-	-
C-F-2	101302		ISI-13142-62	ISI	-	-	-	-	-	-	-	-	-	-	-	-
CX.XX	W- 3		Elbow-to-Flange	AUG	-	-	-	-	-	-	-	-	-	-	-	-
2	FUEL POOL EMERGENCY COOLING			OWN	-	-	-	-	-	-	-	-	-	-	-	-
				PRE	-	-	-	-	-	-	-	-	-	-	-	-
C-F-2	101303		ISI-13142-62	ISI	-	-	-	-	-	-	-	-	-	-	-	-
CX.XX	W- 4		Flange-to-Pipe	AUG	-	-	-	-	-	-	-	-	-	-	-	-
2	FUEL POOL EMERGENCY COOLING			OWN	-	-	-	-	-	-	-	-	-	-	-	-
				PRE	-	-	-	-	-	-	-	-	-	-	-	-
C-F-2	101304		ISI-13142-62	ISI	-	-	-	-	-	-	-	-	-	-	-	-
CX.XX	W- 5		Pipe-to-Elbow	AUG	-	-	-	-	-	-	-	-	-	-	-	-
2	FUEL POOL EMERGENCY COOLING			OWN	-	-	-	-	-	-	-	-	-	-	-	-
				PRE	-	-	-	-	-	-	-	-	-	-	-	-

MONTICELLO Nuclear Generating Plant
3rd Interval ISI Plan Rev. 3 June 1, 1992 to May 31, 2002

Category, ItemNO, Class	Summary / CompID / System	Scope / Method / Procedure	Iso No. Comp. Desc. Code Case /Note		Period 1				Period 2				Period 3			
					1	2	3	4	1	2	3	4	1	2	3	4
C-F-2	101305		ISI-13142-62	ISI	-	-	-	-	-	-	-	-	-	-	-	-
CX.XX	W- 6		Elbow-to-Pipe	AUG	-	-	-	-	-	-	-	-	-	-	-	-
2	FUEL POOL EMERGENCY COOLING			OWN	-	-	-	-	-	-	-	-	-	-	-	-
				PRE	-	-	-	-	-	-	-	-	-	-	-	-
C-F-2	101306		ISI-13142-62	ISI	-	-	-	-	-	-	-	-	-	-	-	-
CX.XX	W- 7		Pipe-to-Elbow	AUG	-	-	-	-	-	-	-	-	-	-	-	-
2	FUEL POOL EMERGENCY COOLING			OWN	-	-	-	-	-	-	-	-	-	-	-	-
				PRE	-	-	-	-	-	-	-	-	-	-	-	-
C-F-2	101307		ISI-13142-62	ISI	-	-	-	-	-	-	-	-	-	-	-	-
CX.XX	W- 8		Elbow-to-Pipe	AUG	-	-	-	-	-	-	-	-	-	-	-	-
2	FUEL POOL EMERGENCY COOLING			OWN	-	-	-	-	-	-	-	-	-	-	-	-
				PRE	-	-	-	-	-	-	-	-	-	-	-	-
C-F-2	101308		ISI-13142-62	ISI	-	-	-	-	-	-	-	-	-	-	-	-
CX.XX	W- 9		Pipe-to-Elbow	AUG	-	-	-	-	-	-	-	-	-	-	-	-
2	FUEL POOL EMERGENCY COOLING			OWN	-	-	-	-	-	-	-	-	-	-	-	-
				PRE	-	-	-	-	-	-	-	-	-	-	-	-
C-F-2	101309		ISI-13142-62	ISI	-	-	-	-	-	-	-	-	-	-	-	-
CX.XX	W-10		Elbow-to-Pipe	AUG	-	-	-	-	-	-	-	-	-	-	-	-
2	FUEL POOL EMERGENCY COOLING			OWN	-	-	-	-	-	-	-	-	-	-	-	-
				PRE	-	-	-	-	-	-	-	-	-	-	-	-
C-F-2	101310		ISI-13142-62	ISI	-	-	-	-	-	-	-	-	-	-	-	-
CX.XX	W-11		Pipe-to-Elbow	AUG	-	-	-	-	-	-	-	-	-	-	-	-
2	FUEL POOL EMERGENCY COOLING			OWN	-	-	-	-	-	-	-	-	-	-	-	-
				PRE	-	-	-	-	-	-	-	-	-	-	-	-
C-F-2	101311		ISI-13142-62	ISI	-	-	-	-	-	-	-	-	-	-	-	-
CX.XX	W-12		Elbow-to-Pipe	AUG	-	-	-	-	-	-	-	-	-	-	-	-
2	FUEL POOL EMERGENCY COOLING			OWN	-	-	-	-	-	-	-	-	-	-	-	-
				PRE	-	-	-	-	-	-	-	-	-	-	-	-
C-F-2	101312		ISI-13142-62	ISI	-	-	-	-	-	-	-	-	-	-	-	-
CX.XX	W-13		Pipe-to-Elbow	AUG	-	-	-	-	-	-	-	-	-	-	-	-
2	FUEL POOL EMERGENCY COOLING			OWN	-	-	-	-	-	-	-	-	-	-	-	-
				PRE	-	-	-	-	-	-	-	-	-	-	-	-
C-F-2	101313		ISI-13142-62	ISI	-	-	-	-	-	-	-	-	-	-	-	-
CX.XX	W-14		Elbow-to-Pipe	AUG	-	-	-	-	-	-	-	-	-	-	-	-
2	FUEL POOL EMERGENCY COOLING			OWN	-	-	-	-	-	-	-	-	-	-	-	-
				PRE	-	-	-	-	-	-	-	-	-	-	-	-
C-F-2	101314		ISI-13142-62	ISI	-	-	-	-	-	-	-	-	-	-	-	-
CX.XX	W-15		Pipe-to-Pipe	AUG	-	-	-	-	-	-	-	-	-	-	-	-
2	FUEL POOL EMERGENCY COOLING			OWN	-	-	-	-	-	-	-	-	-	-	-	-
				PRE	-	-	-	-	-	-	-	-	-	-	-	-

MONTICELLO Nuclear Generating Plant
3rd Interval ISI Plan Rev. 3 June 1, 1992 to May 31, 2002

Category, ItemNO, Class	Summary / CompID / System	Scope / Method / Procedure	Iso No. Comp. Desc. Code Case /Note		Period 1				Period 2				Period 3			
					1	2	3	4	1	2	3	4	1	2	3	4
C-F-2	101315		ISI-13142-62	ISI	-	-	-	-	-	-	-	-	-	-	-	-
CX.XX	W-16		Pipe-to-Elbow	AUG	-	-	-	-	-	-	-	-	-	-	-	-
2	FUEL POOL EMERGENCY COOLING			OWN	-	-	-	-	-	-	-	-	-	-	-	-
				PRE	-	-	-	-	-	-	-	-	-	-	-	-
C-F-2	101316		ISI-13142-62	ISI	-	-	-	-	-	-	-	-	-	-	-	-
CX.XX	W-17		Elbow-to-Elbow	AUG	-	-	-	-	-	-	-	-	-	-	-	-
2	FUEL POOL EMERGENCY COOLING			OWN	-	-	-	-	-	-	-	-	-	-	-	-
				PRE	-	-	-	-	-	-	-	-	-	-	-	-
C-F-2	101317		ISI-13142-62	ISI	-	-	-	-	-	-	-	-	-	-	-	-
CX.XX	W-18		Elbow-to-Pipe	AUG	-	-	-	-	-	-	-	-	-	-	-	-
2	FUEL POOL EMERGENCY COOLING			OWN	-	-	-	-	-	-	-	-	-	-	-	-
				PRE	-	-	-	-	-	-	-	-	-	-	-	-
C-F-2	101318		ISI-13142-62	ISI	-	-	-	-	-	-	-	-	-	-	-	-
CX.XX	W-19		Pipe-to-Elbow	AUG	-	-	-	-	-	-	-	-	-	-	-	-
2	FUEL POOL EMERGENCY COOLING			OWN	-	-	-	-	-	-	-	-	-	-	-	-
				PRE	-	-	-	-	-	-	-	-	-	-	-	-
C-F-2	101319		ISI-13142-62	ISI	-	-	-	-	-	-	-	-	-	-	-	-
CX.XX	W-20		Elbow-to-Pipe	AUG	-	-	-	-	-	-	-	-	-	-	-	-
2	FUEL POOL EMERGENCY COOLING			OWN	-	-	-	-	-	-	-	-	-	-	-	-
				PRE	-	-	-	-	-	-	-	-	-	-	-	-
C-F-2	101320		ISI-13142-62	ISI	-	-	-	-	-	-	-	-	-	-	-	-
CX.XX	W-21		Pipe-to-Elbow	AUG	-	-	-	-	-	-	-	-	-	-	-	-
2	FUEL POOL EMERGENCY COOLING			OWN	-	-	-	-	-	-	-	-	-	-	-	-
				PRE	-	-	-	-	-	-	-	-	-	-	-	-
C-F-2	101321		ISI-13142-62	ISI	-	-	-	-	-	-	-	-	-	-	-	-
CX.XX	W-22		Elbow-to-Pipe	AUG	-	-	-	-	-	-	-	-	-	-	-	-
2	FUEL POOL EMERGENCY COOLING			OWN	-	-	-	-	-	-	-	-	-	-	-	-
				PRE	-	-	-	-	-	-	-	-	-	-	-	-
C-F-2	101322		ISI-13142-62	ISI	-	-	-	-	-	-	-	-	-	-	-	-
CX.XX	W-23		Pipe-to-Pipe	AUG	-	-	-	-	-	-	-	-	-	-	-	-
2	FUEL POOL EMERGENCY COOLING			OWN	-	-	-	-	-	-	-	-	-	-	-	-
				PRE	-	-	-	-	-	-	-	-	-	-	-	-
C-F-2	101323		ISI-13142-62	ISI	-	-	-	-	-	-	-	-	-	-	-	-
CX.XX	W-24		Pipe-to-Elbow	AUG	-	-	-	-	-	-	-	-	-	-	-	-
2	FUEL POOL EMERGENCY COOLING			OWN	-	-	-	-	-	-	-	-	-	-	-	-
				PRE	-	-	-	-	-	-	-	-	-	-	-	-
C-F-2	101324		ISI-13142-62	ISI	-	-	-	-	-	-	-	-	-	-	-	-
CX.XX	W-25		Elbow-to-Pipe	AUG	-	-	-	-	-	-	-	-	-	-	-	-
2	FUEL POOL EMERGENCY COOLING			OWN	-	-	-	-	-	-	-	-	-	-	-	-
				PRE	-	-	-	-	-	-	-	-	-	-	-	-

MONTICELLO Nuclear Generating Plant
3rd Interval ISI Plan Rev. 3 June 1, 1992 to May 31, 2002

Category, ItemNO, Class	Summary / CompID / System	Scope / Method / Procedure	Iso No. Comp. Desc. Code Case /Note		Period 1				Period 2				Period 3			
					1	2	3	4	1	2	3	4	1	2	3	4
C-F-2	101325		ISI-13142-67	ISI	-	-	-	-	-	-	-	-	-	-	-	-
CX.XX	W- 1		Valve-to-Pipe	AUG	-	-	-	-	-	-	-	-	-	-	-	-
2	FP Emergancy Cooling			OWN	-	-	-	-	-	-	-	-	-	-	-	-
				PRE	-	-	-	-	-	-	-	-	-	-	-	-
C-F-2	101327		ISI-13142-67	ISI	-	-	-	-	-	-	-	-	-	-	-	-
CX.XX	W- 3		Flange-to-Elbow	AUG	-	-	-	-	-	-	-	-	-	-	-	-
2	FP Emergancy Cooling			OWN	-	-	-	-	-	-	-	-	-	-	-	-
				PRE	-	-	-	-	-	-	-	-	-	-	-	-
C-F-2	101328		ISI-13142-67	ISI	-	-	-	-	-	-	-	-	-	-	-	-
CX.XX	W- 2		Pipe-to-Flange	AUG	-	-	-	-	-	-	-	-	-	-	-	-
2	FP Emergancy Cooling			OWN	-	-	-	-	-	-	-	-	-	-	-	-
				PRE	-	-	-	-	-	-	-	-	-	-	-	-
C-F-2	101330		ISI-13142-67	ISI	-	-	-	-	-	-	-	-	-	-	-	-
CX.XX	W- 4		Elbow-to-Flange	AUG	-	-	-	-	-	-	-	-	-	-	-	-
2	FP Emergancy Cooling			OWN	-	-	-	-	-	-	-	-	-	-	-	-
				PRE	-	-	-	-	-	-	-	-	-	-	-	-
C-F-2	101331		ISI-13142-67	ISI	-	-	-	-	-	-	-	-	-	-	-	-
CX.XX	W- 5		Flange-to-Pipe	AUG	-	-	-	-	-	-	-	-	-	-	-	-
2	FP Emergancy Cooling			OWN	-	-	-	-	-	-	-	-	-	-	-	-
				PRE	-	-	-	-	-	-	-	-	-	-	-	-
C-F-2	101332		ISI-13142-67	ISI	-	-	-	-	-	-	-	-	-	-	-	-
CX.XX	W- 6		Pipe-to-Elbow	AUG	-	-	-	-	-	-	-	-	-	-	-	-
2	FP Emergancy Cooling			OWN	-	-	-	-	-	-	-	-	-	-	-	-
				PRE	-	-	-	-	-	-	-	-	-	-	-	-
C-F-2	101333		ISI-13142-67	ISI	-	-	-	-	-	-	-	-	-	-	-	-
CX.XX	W- 7		Elbow-to-Pipe	AUG	-	-	-	-	-	-	-	-	-	-	-	-
2	FP Emergancy Cooling			OWN	-	-	-	-	-	-	-	-	-	-	-	-
				PRE	-	-	-	-	-	-	-	-	-	-	-	-
C-F-2	101334		ISI-13142-67	ISI	-	-	-	-	-	-	-	-	-	-	-	-
CX.XX	W- 8		Pipe-to-Elbow	AUG	-	-	-	-	-	-	-	-	-	-	-	-
2	FP Emergancy Cooling			OWN	-	-	-	-	-	-	-	-	-	-	-	-
				PRE	-	-	-	-	-	-	-	-	-	-	-	-
C-F-2	101335		ISI-13142-67	ISI	-	-	-	-	-	-	-	-	-	-	-	-
CX.XX	W- 9		Elbow-to-Pipe	AUG	-	-	-	-	-	-	-	-	-	-	-	-
2	FP Emergancy Cooling			OWN	-	-	-	-	-	-	-	-	-	-	-	-
				PRE	-	-	-	-	-	-	-	-	-	-	-	-
C-F-2	101336		ISI-13142-67	ISI	-	-	-	-	-	-	-	-	-	-	-	-
CX.XX	W-10		Pipe-to-Elbow	AUG	-	-	-	-	-	-	-	-	-	-	-	-
2	FP Emergancy Cooling			OWN	-	-	-	-	-	-	-	-	-	-	-	-
				PRE	-	-	-	-	-	-	-	-	-	-	-	-

MONTICELLO Nuclear Generating Plant
3rd Interval ISI Plan Rev. 3 June 1, 1992 to May 31, 2002

Category, ItemNO, Class	Summary / CompID / System	Scope / Method / Procedure	Iso No. Comp. Desc. Code Case /Note		Period 1				Period 2				Period 3			
					1	2	3	4	1	2	3	4	1	2	3	4
C-F-2	101337		ISI-13142-67	ISI	-	-	-	-	-	-	-	-	-	-	-	-
CX.XX	W-11		Elbow-to-Pipe	AUG	-	-	-	-	-	-	-	-	-	-	-	-
2	FP Emergancy Cooling			OWN	-	-	-	-	-	-	-	-	-	-	-	-
				PRE	-	-	-	-	-	-	-	-	-	-	-	-
C-F-2	101338		ISI-13142-67	ISI	-	-	-	-	-	-	-	-	-	-	-	-
CX.XX	W-12		Pipe-to-Pipe	AUG	-	-	-	-	-	-	-	-	-	-	-	-
2	FP Emergancy Cooling			OWN	-	-	-	-	-	-	-	-	-	-	-	-
				PRE	-	-	-	-	-	-	-	-	-	-	-	-
C-F-2	101339		ISI-13142-67	ISI	-	-	-	-	-	-	-	-	-	-	-	-
CX.XX	W-13		Pipe-to-Elbow	AUG	-	-	-	-	-	-	-	-	-	-	-	-
2	FP Emergancy Cooling			OWN	-	-	-	-	-	-	-	-	-	-	-	-
				PRE	-	-	-	-	-	-	-	-	-	-	-	-
C-F-2	101340		ISI-13142-67	ISI	-	-	-	-	-	-	-	-	-	-	-	-
CX.XX	W-14		Elbow-to-Pipe	AUG	-	-	-	-	-	-	-	-	-	-	-	-
2	FP Emergancy Cooling			OWN	-	-	-	-	-	-	-	-	-	-	-	-
				PRE	-	-	-	-	-	-	-	-	-	-	-	-
C-F-2	101341		ISI-13142-67	ISI	-	-	-	-	-	-	-	-	-	-	-	-
CX.XX	W-15		Pipe-to-Elbow	AUG	-	-	-	-	-	-	-	-	-	-	-	-
2	FP Emergancy Cooling			OWN	-	-	-	-	-	-	-	-	-	-	-	-
				PRE	-	-	-	-	-	-	-	-	-	-	-	-
C-F-2	101342		ISI-13142-67	ISI	-	-	-	-	-	-	-	-	-	-	-	-
CX.XX	W-16		Elbow-to-Pipe	AUG	-	-	-	-	-	-	-	-	-	-	-	-
2	FP Emergancy Cooling			OWN	-	-	-	-	-	-	-	-	-	-	-	-
				PRE	-	-	-	-	-	-	-	-	-	-	-	-
C-F-2	101343		ISI-13142-67	ISI	-	-	-	-	-	-	-	-	-	-	-	-
CX.XX	W-17		Pipe-to-Elbow	AUG	-	-	-	-	-	-	-	-	-	-	-	-
2	FP Emergancy Cooling			OWN	-	-	-	-	-	-	-	-	-	-	-	-
				PRE	-	-	-	-	-	-	-	-	-	-	-	-
C-F-2	101344		ISI-13142-67	ISI	-	-	-	-	-	-	-	-	-	-	-	-
CX.XX	W-18		Elbow-to-Pipe	AUG	-	-	-	-	-	-	-	-	-	-	-	-
2	FP Emergancy Cooling			OWN	-	-	-	-	-	-	-	-	-	-	-	-
				PRE	-	-	-	-	-	-	-	-	-	-	-	-
C-F-2	101345		ISI-13142-67	ISI	-	-	-	-	-	-	-	-	-	-	-	-
CX.XX	W-19		Pipe-to-Elbow	AUG	-	-	-	-	-	-	-	-	-	-	-	-
2	FP Emergancy Cooling			OWN	-	-	-	-	-	-	-	-	-	-	-	-
				PRE	-	-	-	-	-	-	-	-	-	-	-	-
C-F-2	101346		ISI-13142-67	ISI	-	-	-	-	-	-	-	-	-	-	-	-
CX.XX	W-20		Elbow-to-Pipe	AUG	-	-	-	-	-	-	-	-	-	-	-	-
2	FP Emergancy Cooling			OWN	-	-	-	-	-	-	-	-	-	-	-	-
				PRE	-	-	-	-	-	-	-	-	-	-	-	-

MONTICELLO Nuclear Generating Plant
3rd Interval ISI Plan Rev. 3 June 1, 1992 to May 31, 2002

Category, ItemNO, Class	Summary / CompID / System	Scope / Method / Procedure	Iso No. Comp. Desc. Code Case /Note		Period 1				Period 2				Period 3			
					1	2	3	4	1	2	3	4	1	2	3	4
C-F-2	101347		ISI-13142-67	ISI	-	-	-	-	-	-	-	-	-	-	-	-
CX.XX	W-21		Pipe-to-Elbow	AUG	-	-	-	-	-	-	-	-	-	-	-	-
2	FP Emergancy Cooling			OWN	-	-	-	-	-	-	-	-	-	-	-	-
				PRE	-	-	-	-	-	-	-	-	-	-	-	-
C-F-2	101348		ISI-13142-67	ISI	-	-	-	-	-	-	-	-	-	-	-	-
CX.XX	W-22		Elbow-to-Pipe	AUG	-	-	-	-	-	-	-	-	-	-	-	-
2	FP Emergancy Cooling			OWN	-	-	-	-	-	-	-	-	-	-	-	-
				PRE	-	-	-	-	-	-	-	-	-	-	-	-
C-F-2	101349		ISI-13142-67	ISI	-	-	-	-	-	-	-	-	-	-	-	-
CX.XX	W-23		Pipe-to-Elbow	AUG	-	-	-	-	-	-	-	-	-	-	-	-
2	FP Emergancy Cooling			OWN	-	-	-	-	-	-	-	-	-	-	-	-
				PRE	-	-	-	-	-	-	-	-	-	-	-	-
C-F-2	101350		ISI-13142-67	ISI	-	-	-	-	-	-	-	-	-	-	-	-
CX.XX	W-24		Elbow-to-Pipe	AUG	-	-	-	-	-	-	-	-	-	-	-	-
2	FP Emergancy Cooling			OWN	-	-	-	-	-	-	-	-	-	-	-	-
				PRE	-	-	-	-	-	-	-	-	-	-	-	-
C-F-2	101351		ISI-13142-67	ISI	-	-	-	-	-	-	-	-	-	-	-	-
CX.XX	W-25		Pipe-to-Elbow	AUG	-	-	-	-	-	-	-	-	-	-	-	-
2	FP Emergancy Cooling			OWN	-	-	-	-	-	-	-	-	-	-	-	-
				PRE	-	-	-	-	-	-	-	-	-	-	-	-
C-F-2	101352		ISI-13142-67	ISI	-	-	-	-	-	-	-	-	-	-	-	-
CX.XX	W-26		Elbow-to-Pipe	AUG	-	-	-	-	-	-	-	-	-	-	-	-
2	FP Emergancy Cooling			OWN	-	-	-	-	-	-	-	-	-	-	-	-
				PRE	-	-	-	-	-	-	-	-	-	-	-	-
C-F-2	101353		ISI-13142-67	ISI	-	-	-	-	-	-	-	-	-	-	-	-
CX.XX	W-27		Pipe-to-Pipe	AUG	-	-	-	-	-	-	-	-	-	-	-	-
2	FP Emergancy Cooling			OWN	-	-	-	-	-	-	-	-	-	-	-	-
				PRE	-	-	-	-	-	-	-	-	-	-	-	-
C-F-2	101354		ISI-13142-67	ISI	-	-	-	-	-	-	-	-	-	-	-	-
CX.XX	W-28		Pipe-to-Weldolet	AUG	-	-	-	-	-	-	-	-	-	-	-	-
2	FP Emergancy Cooling			OWN	-	-	-	-	-	-	-	-	-	-	-	-
				PRE	-	-	-	-	-	-	-	-	-	-	-	-
F-C	101360		ISI-73880-A	ISI	-	-	-	-	-	-	-	-	-	-	-	-
F-A,B,C	H- 1		Spring / Clamp	AUG	-	-	-	-	-	-	-	-	-	-	-	-
1	Reactor Wtr Cleanup			OWN	-	-	-	-	-	-	-	-	-	-	-	-
				PRE	-	-	-	-	-	-	-	-	-	-	-	-
F-B	101361		ISI-73880-A	ISI	-	-	-	-	-	-	-	-	-	-	-	-
F-A,B,C	H- 2		Box Restraint	AUG	-	-	-	-	-	-	-	-	-	-	-	-
1	Reactor Wtr Cleanup			OWN	-	-	-	-	-	-	-	-	-	-	-	-
				PRE	-	-	-	-	-	-	-	-	-	-	-	-

MONTICELLO Nuclear Generating Plant
3rd Interval ISI Plan Rev. 3 June 1, 1992 to May 31, 2002

Category, ItemNO, Class	Summary / CompID / System	Scope / Method / Procedure	Iso No. Comp. Desc. Code Case /Note		Period 1				Period 2				Period 3			
					1	2	3	4	1	2	3	4	1	2	3	4
B-K-1	101363	PSI/VT/ISI-VT-2.0	ISI-73880-A	ISI	c	-	-	-	-	-	-	-	b	-	-	-
B10.10	H- 3	ISI/MT/ISI-MT-1	Double Spring/4 Lugs	AUG	-	-	-	-	-	-	-	-	-	-	-	-
1	Reactor Wtr Cleanup			OWN	-	-	-	-	-	-	-	-	-	-	-	-
				PRE	-	-	-	-	-	-	-	-	-	-	-	-
B-J	101366		ISI-73880-A	ISI	-	-	-	-	-	-	-	-	-	-	-	-
B9.10	W- 1 LS U&D		Branch-to-Pipe	AUG	-	-	-	-	-	-	-	-	-	-	-	-
1	Reactor Wtr Cleanup			OWN	-	-	-	-	-	-	-	-	-	-	-	-
				PRE	-	-	-	-	-	-	-	-	-	-	-	-
B-J	101367	ISI/PT/ISI-PT-1	ISI-73880-A	ISI	-	-	-	-	-	c	-	-	b	-	-	-
B9.10	W- 2 LS U	ISI/UT/ISI-UT-16	Pipe-to-Elbow	AUG	-	-	-	-	-	-	-	-	-	-	-	-
1	Reactor Wtr Cleanup		NOTE: CC	OWN	-	-	-	-	-	-	-	-	-	-	-	-
				PRE	-	-	-	-	-	-	-	-	-	-	-	-
B-J	101368		ISI-73880-A	ISI	-	-	-	-	-	-	-	-	-	-	-	-
B9.10	W- 3 LS D		Elbow-to-Pipe	AUG	-	-	-	-	-	-	-	-	-	-	-	-
1	Reactor Wtr Cleanup			OWN	-	-	-	-	-	-	-	-	-	-	-	-
				PRE	-	-	-	-	-	-	-	-	-	-	-	-
B-J	101369	ISI/MT/ISI-MT-1	ISI-73880-A	ISI	-	-	-	-	-	-	-	-	s	-	-	-
B9.10	W- 4 LS U	ISI/UT/ISI-UT-1	Pipe-to-Elbow	AUG	-	-	-	-	-	-	-	-	-	-	-	-
1	Reactor Wtr Cleanup			OWN	-	-	-	-	-	-	-	-	-	-	-	-
				PRE	-	-	-	-	-	-	-	-	-	-	-	-
B-J	101370		ISI-73880-A	ISI	-	-	-	-	-	-	-	-	-	-	-	-
B9.10	W- 5 LS D		Elbow-to-Pipe	AUG	-	-	-	-	-	-	-	-	-	-	-	-
1	Reactor Wtr Cleanup			OWN	-	-	-	-	-	-	-	-	-	-	-	-
				PRE	-	-	-	-	-	-	-	-	-	-	-	-
B-J	101371		ISI-73880-A	ISI	-	-	-	-	-	-	-	-	-	-	-	-
B9.10	W- 6 LS U		Pipe-to-Elbow	AUG	-	-	-	-	-	-	-	-	-	-	-	-
1	Reactor Wtr Cleanup			OWN	-	-	-	-	-	-	-	-	-	-	-	-
				PRE	-	-	-	-	-	-	-	-	-	-	-	-
B-J	101372	ISI/UT/ISI-UT-1	ISI-73880-A	ISI	c	-	-	-	-	-	-	-	-	-	-	-
B9.11	W- 7	ISI/MT/ISI-MT-1	Elbow-to-Valve	AUG	-	-	-	-	-	-	-	-	-	-	-	-
1	Reactor Wtr Cleanup			OWN	-	-	-	-	-	-	-	-	-	-	-	-
				PRE	-	-	-	-	-	-	-	-	-	-	-	-
B-J	101373		ISI-73880-A	ISI	-	-	-	-	-	-	-	-	-	-	-	-
B9.11	W- 8		Valve-to-Pipe	AUG	-	-	-	-	-	-	-	-	-	-	-	-
1	Reactor Wtr Cleanup			OWN	-	-	-	-	-	-	-	-	-	-	-	-
				PRE	-	-	-	-	-	-	-	-	-	-	-	-
B-J	101374	ISI/MT/ISI-MT-1	ISI-73880-A	ISI	-	c	-	-	-	-	-	-	-	-	-	-
B9.32	W- 9		Branch-to-Pipe	AUG	-	-	-	-	-	-	-	-	-	-	-	-
1	Reactor Wtr Cleanup			OWN	-	-	-	-	-	-	-	-	-	-	-	-
				PRE	-	-	-	-	-	-	-	-	-	-	-	-

MONTICELLO Nuclear Generating Plant
3rd Interval ISI Plan Rev. 3 June 1, 1992 to May 31, 2002

Category, ItemNO, Class	Summary / CompID / System	Scope / Method / Procedure	Iso No. Comp. Desc. Code Case /Note		Period 1				Period 2				Period 3			
					1	2	3	4	1	2	3	4	1	2	3	4
B-J	101375		ISI-73880-A	ISI	-	-	-	-	-	-	-	-	-	-	-	-
B9.11	W-10		Pipe-to-Elbow	AUG	-	-	-	-	-	-	-	-	-	-	-	-
1	Reactor Wtr Cleanup			OWN	-	-	-	-	-	-	-	-	-	-	-	-
				PRE	-	-	-	-	-	-	-	-	-	-	-	-
B-J	101376	ISI/MT/ISI-MT-1	ISI-73880-A	ISI	-	c	-	-	-	-	-	-	-	-	-	-
B9.10	W-11	ISI/UT/ISI-UT-1	Elbow-to-Pipe	AUG	-	-	-	-	-	-	-	-	-	-	-	-
1	Reactor Wtr Cleanup			OWN	-	-	-	-	-	-	-	-	-	-	-	-
				PRE	-	-	-	-	-	-	-	-	-	-	-	-
B-J	101377	ISI/MT/ISI-MT-1	ISI-73880-A	ISI	-	c	-	-	-	-	-	-	-	-	-	-
B9.10	W-12	ISI/UT/ISI-UT-1	Pipe-to-Elbow	AUG	-	-	-	-	-	-	-	-	-	-	-	-
1	Reactor Wtr Cleanup			OWN	-	-	-	-	-	-	-	-	-	-	-	-
				PRE	-	-	-	-	-	-	-	-	-	-	-	-
B-J	101378		ISI-73880-A	ISI	-	-	-	-	-	-	-	-	-	-	-	-
B9.10	W-13 LS D		Elbow-to-Pipe	AUG	-	-	-	-	-	-	-	-	-	-	-	-
1	Reactor Wtr Cleanup			OWN	-	-	-	-	-	-	-	-	-	-	-	-
				PRE	-	-	-	-	-	-	-	-	-	-	-	-
B-J	101379		ISI-73880-A	ISI	-	-	-	-	-	-	-	-	-	-	-	-
B9.10	W-14 LS U&D		Pipe-to-Pipe	AUG	-	-	-	-	-	-	-	-	-	-	-	-
1	Reactor Wtr Cleanup			OWN	-	-	-	-	-	-	-	-	-	-	-	-
				PRE	-	-	-	-	-	-	-	-	-	-	-	-
B-J	101380		ISI-73880-A	ISI	-	-	-	-	-	-	-	-	-	-	-	-
B9.10	W-15 LS U		Pipe-to-Elbow	AUG	-	-	-	-	-	-	-	-	-	-	-	-
1	Reactor Wtr Cleanup			OWN	-	-	-	-	-	-	-	-	-	-	-	-
				PRE	-	-	-	-	-	-	-	-	-	-	-	-
B-J	101381		ISI-73880-A	ISI	-	-	-	-	-	-	-	-	-	-	-	-
B9.10	W-16 LS D		Elbow-to-Pipe	AUG	-	-	-	-	-	-	-	-	-	-	-	-
1	Reactor Wtr Cleanup			OWN	-	-	-	-	-	-	-	-	-	-	-	-
				PRE	-	-	-	-	-	-	-	-	-	-	-	-
B-J	101382		ISI-73880-A	ISI	-	-	-	-	-	-	-	-	-	-	-	-
B9.10	W-17 LS U		Pipe-to-Valve	AUG	-	-	-	-	-	-	-	-	-	-	-	-
1	Reactor Wtr Cleanup			OWN	-	-	-	-	-	-	-	-	-	-	-	-
				PRE	-	-	-	-	-	-	-	-	-	-	-	-
B-J	101383		ISI-73880-A	ISI	-	-	-	-	-	-	-	-	-	-	-	-
B9.10	W-18 LS D		Valve-to-Pipe	AUG	-	-	-	-	-	-	-	-	-	-	-	-
1	Reactor Wtr Cleanup			OWN	-	-	-	-	-	-	-	-	-	-	-	-
				PRE	-	-	-	-	-	-	-	-	-	-	-	-
B-J	101384		ISI-73880-A	ISI	-	-	-	-	-	-	-	-	-	-	-	-
B9.10	W-19 LS U		Pipe-to-Elbow	AUG	-	-	-	-	-	-	-	-	-	-	-	-
1	Reactor Wtr Cleanup			OWN	-	-	-	-	-	-	-	-	-	-	-	-
				PRE	-	-	-	-	-	-	-	-	-	-	-	-

MONTICELLO Nuclear Generating Plant
3rd Interval ISI Plan Rev. 3 June 1, 1992 to May 31, 2002

Category, ItemNO, Class	Summary / CompID / System	Scope / Method / Procedure	Iso No. Comp. Desc. Code Case /Note		Period 1				Period 2				Period 3			
					1	2	3	4	1	2	3	4	1	2	3	4
B-J	101385		ISI-73880-A	ISI	-	-	-	-	-	-	-	-	-	-	-	-
B9.11	W-20		Elbow-to-Pipe	AUG	-	-	-	-	-	-	-	-	-	-	-	-
1	Reactor Wtr Cleanup			OWN	-	-	-	-	-	-	-	-	-	-	-	-
				PRE	-	-	-	-	-	-	-	-	-	-	-	-
B-J	101386	ISI/MT/ISI-MT-1	ISI-73880-A	ISI	c	-	-	-	-	-	-	-	b	-	-	-
B9.11	W-21	ISI/UT/ISI-UT-1	Pipe-to-Elbow	AUG	-	-	-	-	-	-	-	-	-	-	-	-
1	Reactor Wtr Cleanup			OWN	-	-	-	-	-	-	-	-	-	-	-	-
				PRE	-	-	-	-	-	-	-	-	-	-	-	-
B-J	101387	ISI/MT/ISI-MT-1	ISI-73880-A	ISI	c	-	-	-	-	-	-	-	b	-	-	-
B9.11	W-22	ISI/UT/ISI-UT-1	Elbow-to-Valve	AUG	-	-	-	-	-	-	-	-	-	-	-	-
1	Reactor Wtr Cleanup			OWN	-	-	-	-	-	-	-	-	-	-	-	-
				PRE	-	-	-	-	-	-	-	-	-	-	-	-
B-J	101388	ISI/MT/ISI-MT-1	ISI-73880-A	ISI	-	-	-	-	-	-	-	-	b	-	-	-
B9.11	W-23	ISI/UT/ISI-UT-1	Valve-to-Pipe	AUG	-	-	-	-	-	-	-	-	-	-	-	-
1	Reactor Wtr Cleanup			OWN	-	-	-	-	-	-	-	-	-	-	-	-
				PRE	-	-	-	-	-	-	-	-	-	-	-	-
B-J	101389		ISI-73880-A	ISI	-	-	-	-	-	-	-	-	-	-	-	-
B9.11	W-24		Pipe-to-Pipe	AUG	-	-	-	-	-	-	-	-	-	-	-	-
1	Reactor Wtr Cleanup		NOTE: DD	OWN	-	-	-	-	-	-	-	-	-	-	-	-
				PRE	-	-	-	-	-	-	-	-	-	-	-	-
B-J	101390	ISI/MT/ISI-MT-1	ISI-73880-A	ISI	-	-	-	-	-	-	-	-	-	s	-	-
B9.11	W-25	ISI/UT/ISI-UT-1	Pipe-to-Pipe	AUG	-	-	-	-	-	-	-	-	-	-	-	-
1	Reactor Wtr Cleanup			OWN	-	-	-	-	-	-	-	-	-	-	-	-
				PRE	-	-	-	-	-	-	-	-	-	-	-	-
B-J	101391	ISI/MT/ISI-MT-1	ISI-73880-A	ISI	-	c	-	-	-	-	-	-	b	-	-	-
B9.11	W-26	ISI/UT/ISI-UT-1	Pipe-to-Valve	AUG	-	-	-	-	-	-	-	-	-	-	-	-
1	Reactor Wtr Cleanup		NOTE: MM	OWN	-	-	-	-	-	-	-	-	-	-	-	-
				PRE	-	-	-	-	-	-	-	-	-	-	-	-
B-G-2	101392	ISI/VT/ISI-VT-1.0	ISI-74209-1A	ISI	-	-	-	-	-	-	-	-	-	s	-	-
B7.50	B- 1		Flange Bolting	AUG	-	-	-	-	-	-	-	-	-	-	-	-
1	Recirc A Drain Line			OWN	-	-	-	-	-	-	-	-	-	-	-	-
				PRE	-	-	-	-	-	-	-	-	-	-	-	-
B-J	101393		ISI-74209-1A	ISI	-	-	-	-	-	-	-	-	-	-	-	-
B9.40	W- 1		Hf Coupling-to-Pipe	AUG	-	-	-	-	-	-	-	-	-	-	-	-
1	Recirc A Drain Line			OWN	-	-	-	-	-	-	-	-	-	-	-	-
				PRE	-	-	-	-	-	-	-	-	-	-	-	-
B-J	101394		ISI-74209-1A	ISI	-	-	-	-	-	-	-	-	-	-	-	-
B9.40	W- 2		Pipe-to-Elbow	AUG	-	-	-	-	-	-	-	-	-	-	-	-
1	Recirc A Drain Line			OWN	-	-	-	-	-	-	-	-	-	-	-	-
				PRE	-	-	-	-	-	-	-	-	-	-	-	-

MONTICELLO Nuclear Generating Plant
3rd Interval ISI Plan Rev. 3 June 1, 1992 to May 31, 2002

Category, ItemNO, Class	Summary / CompID / System	Scope / Method / Procedure	Iso No. Comp. Desc. Code Case /Note		Period 1				Period 2				Period 3			
					1	2	3	4	1	2	3	4	1	2	3	4
B-J	101395		ISI-74209-1A	ISI	-	-	-	-	-	-	-	-	-	-	-	-
B9.40	W- 3		Elbow-to-Pipe	AUG	-	-	-	-	-	-	-	-	-	-	-	-
1	Recirc A Drain Line			OWN	-	-	-	-	-	-	-	-	-	-	-	-
				PRE	-	-	-	-	-	-	-	-	-	-	-	-
B-J	101396		ISI-74209-1A	ISI	-	-	-	-	-	-	-	-	-	-	-	-
B9.40	W- 4		Pipe-to-Elbow	AUG	-	-	-	-	-	-	-	-	-	-	-	-
1	Recirc A Drain Line			OWN	-	-	-	-	-	-	-	-	-	-	-	-
				PRE	-	-	-	-	-	-	-	-	-	-	-	-
B-J	101397		ISI-74209-1A	ISI	-	-	-	-	-	-	-	-	-	-	-	-
B9.40	W- 5		Elbow-to-Pipe	AUG	-	-	-	-	-	-	-	-	-	-	-	-
1	Recirc A Drain Line			OWN	-	-	-	-	-	-	-	-	-	-	-	-
				PRE	-	-	-	-	-	-	-	-	-	-	-	-
B-J	101398		ISI-74209-1A	ISI	-	-	-	-	-	-	-	-	-	-	-	-
B9.40	W- 6		Pipe-to-Tee	AUG	-	-	-	-	-	-	-	-	-	-	-	-
1	Recirc A Drain Line			OWN	-	-	-	-	-	-	-	-	-	-	-	-
				PRE	-	-	-	-	-	-	-	-	-	-	-	-
B-J	101399	ISI/PT/ISI-PT-1	ISI-74209-1A	ISI	c	-	-	-	-	-	-	-	-	-	-	-
B9.40	W- 7		Tee-to-Pipe	AUG	-	-	-	-	-	-	-	-	-	-	-	-
1	Recirc A Drain Line			OWN	-	-	-	-	-	-	-	-	-	-	-	-
				PRE	-	-	-	-	-	-	-	-	-	-	-	-
B-J	101400	ISI/PT/ISI-PT-1	ISI-74209-1A	ISI	c	-	-	-	-	-	-	-	-	-	-	-
B9.40	W- 8		Pipe-to-Valve	AUG	-	-	-	-	-	-	-	-	-	-	-	-
1	Recirc A Drain Line			OWN	-	-	-	-	-	-	-	-	-	-	-	-
				PRE	-	-	-	-	-	-	-	-	-	-	-	-
B-J	101401		ISI-74209-1A	ISI	-	-	-	-	-	-	-	-	-	-	-	-
B9.40	W- 9		Valve-to-Pipe	AUG	-	-	-	-	-	-	-	-	-	-	-	-
1	Recirc A Drain Line			OWN	-	-	-	-	-	-	-	-	-	-	-	-
				PRE	-	-	-	-	-	-	-	-	-	-	-	-
B-J	101402		ISI-74209-1A	ISI	-	-	-	-	-	-	-	-	-	-	-	-
B9.40	W-10		Pipe-to-Elbow	AUG	-	-	-	-	-	-	-	-	-	-	-	-
1	Recirc A Drain Line			OWN	-	-	-	-	-	-	-	-	-	-	-	-
				PRE	-	-	-	-	-	-	-	-	-	-	-	-
B-J	101403	ISI/PT/ISI-PT-1	ISI-74209-1A	ISI	-	-	-	-	-	-	-	-	-	s	-	-
B9.40	W-11		Elbow-to-Pipe	AUG	-	-	-	-	-	-	-	-	-	-	-	-
1	Recirc A Drain Line			OWN	-	-	-	-	-	-	-	-	-	-	-	-
				PRE	-	-	-	-	-	-	-	-	-	-	-	-
B-J	101404	ISI/PT/ISI-PT-1	ISI-74209-1A	ISI	-	-	-	-	-	-	-	-	-	s	-	-
B9.40	W-12		Pipe-to-Tee	AUG	-	-	-	-	-	-	-	-	-	-	-	-
1	Recirc A Drain Line			OWN	-	-	-	-	-	-	-	-	-	-	-	-
				PRE	-	-	-	-	-	-	-	-	-	-	-	-

MONTICELLO Nuclear Generating Plant
3rd Interval ISI Plan Rev. 3 June 1, 1992 to May 31, 2002

Category, ItemNO, Class	Summary / CompID / System	Scope / Method / Procedure	Iso No. Comp. Desc. Code Case /Note		Period 1				Period 2				Period 3			
					1	2	3	4	1	2	3	4	1	2	3	4
B-J	101405		ISI-74209-1A	ISI	-	-	-	-	-	-	-	-	-	-	-	-
B9.40	W-13		Tee-to-Flange	AUG	-	-	-	-	-	-	-	-	-	-	-	-
1	Recirc A Drain Line			OWN	-	-	-	-	-	-	-	-	-	-	-	-
				PRE	-	-	-	-	-	-	-	-	-	-	-	-
B-J	101406		ISI-74209-1A	ISI	-	-	-	-	-	-	-	-	-	-	-	-
B9.40	W-14		Tee-to-Pipe	AUG	-	-	-	-	-	-	-	-	-	-	-	-
1	Recirc A Drain Line			OWN	-	-	-	-	-	-	-	-	-	-	-	-
				PRE	-	-	-	-	-	-	-	-	-	-	-	-
B-J	101407		ISI-74209-1A	ISI	-	-	-	-	-	-	-	-	-	-	-	-
B9.40	W-15		Pipe-to-Valve	AUG	-	-	-	-	-	-	-	-	-	-	-	-
1	Recirc A Drain Line			OWN	-	-	-	-	-	-	-	-	-	-	-	-
				PRE	-	-	-	-	-	-	-	-	-	-	-	-
B-G-2	101408	ISI/VT/ISI-VT-1.0	ISI-74210-1A	ISI	-	-	-	-	-	C	-	-	-	-	-	-
B7.50	B- 1		Flange Bolting	AUG	-	-	-	-	-	-	-	-	-	-	-	-
1	Recirc B Drain Line			OWN	-	-	-	-	-	-	-	-	-	-	-	-
				PRE	-	-	-	-	-	-	-	-	-	-	-	-
B-J	101409	ISI/PT/ISI-PT-1	ISI-74210-1A	ISI	-	-	-	-	-	C	-	-	-	-	-	-
B9.40	W- 1		Hf Coupling-to-Pipe	AUG	-	-	-	-	-	-	-	-	-	-	-	-
1	Recirc B Drain Line			OWN	-	-	-	-	-	-	-	-	-	-	-	-
				PRE	-	-	-	-	-	-	-	-	-	-	-	-
B-J	101410		ISI-74210-1A	ISI	-	-	-	-	-	-	-	-	-	-	-	-
B9.40	W- 2		Pipe-to-Elbow	AUG	-	-	-	-	-	-	-	-	-	-	-	-
1	Recirc B Drain Line			OWN	-	-	-	-	-	-	-	-	-	-	-	-
				PRE	-	-	-	-	-	-	-	-	-	-	-	-
B-J	101411	ISI/PT/ISI-PT-1	ISI-74210-1A	ISI	-	-	-	-	-	C	-	-	-	-	-	-
B9.40	W- 3		Elbow-to-Pipe	AUG	-	-	-	-	-	-	-	-	-	-	-	-
1	Recirc B Drain Line			OWN	-	-	-	-	-	-	-	-	-	-	-	-
				PRE	-	-	-	-	-	-	-	-	-	-	-	-
B-J	101412		ISI-74210-1A	ISI	-	-	-	-	-	-	-	-	-	-	-	-
B9.40	W- 4		Pipe-to-Tee	AUG	-	-	-	-	-	-	-	-	-	-	-	-
1	Recirc B Drain Line			OWN	-	-	-	-	-	-	-	-	-	-	-	-
				PRE	-	-	-	-	-	-	-	-	-	-	-	-
B-J	101413		ISI-74210-1A	ISI	-	-	-	-	-	-	-	-	-	-	-	-
B9.40	W- 5		Tee-to-Pipe	AUG	-	-	-	-	-	-	-	-	-	-	-	-
1	Recirc B Drain Line			OWN	-	-	-	-	-	-	-	-	-	-	-	-
				PRE	-	-	-	-	-	-	-	-	-	-	-	-
B-J	101414		ISI-74210-1A	ISI	-	-	-	-	-	-	-	-	-	-	-	-
B9.40	W- 6		Pipe-to-Valve	AUG	-	-	-	-	-	-	-	-	-	-	-	-
1	Recirc B Drain Line			OWN	-	-	-	-	-	-	-	-	-	-	-	-
				PRE	-	-	-	-	-	-	-	-	-	-	-	-

MONTICELLO Nuclear Generating Plant
3rd Interval ISI Plan Rev. 3 June 1, 1992 to May 31, 2002

Category, ItemNO, Class	Summary / CompID / System	Scope / Method / Procedure	Iso No. Comp. Desc. Code Case /Note		Period 1				Period 2				Period 3			
					1	2	3	4	1	2	3	4	1	2	3	4
B-J	101415		ISI-74210-1A	ISI	-	-	-	-	-	-	-	-	-	-	-	-
B9.40	W- 7		Valve-to-Pipe	AUG	-	-	-	-	-	-	-	-	-	-	-	-
1	Recirc B Drain Line			OWN	-	-	-	-	-	-	-	-	-	-	-	-
				PRE	-	-	-	-	-	-	-	-	-	-	-	-
B-J	101416		ISI-74210-1A	ISI	-	-	-	-	-	-	-	-	-	-	-	-
B9.40	W- 8		Pipe-to-Tee	AUG	-	-	-	-	-	-	-	-	-	-	-	-
1	Recirc B Drain Line			OWN	-	-	-	-	-	-	-	-	-	-	-	-
				PRE	-	-	-	-	-	-	-	-	-	-	-	-
B-J	101417	ISI/PT/ISI-PT-1	ISI-74210-1A	ISI	-	-	-	-	-	C	-	-	-	-	-	-
B9.40	W- 9		Tee-to-Flange	AUG	-	-	-	-	-	-	-	-	-	-	-	-
1	Recirc B Drain Line			OWN	-	-	-	-	-	-	-	-	-	-	-	-
				PRE	-	-	-	-	-	-	-	-	-	-	-	-
B-J	101418		ISI-74210-1A	ISI	-	-	-	-	-	-	-	-	-	-	-	-
B9.40	W-10		Tee-to-Pipe	AUG	-	-	-	-	-	-	-	-	-	-	-	-
1	Recirc B Drain Line			OWN	-	-	-	-	-	-	-	-	-	-	-	-
				PRE	-	-	-	-	-	-	-	-	-	-	-	-
B-J	101419		ISI-74210-1A	ISI	-	-	-	-	-	-	-	-	-	-	-	-
B9.40	W-11		Pipe-to-Valve	AUG	-	-	-	-	-	-	-	-	-	-	-	-
1	Recirc B Drain Line			OWN	-	-	-	-	-	-	-	-	-	-	-	-
				PRE	-	-	-	-	-	-	-	-	-	-	-	-
F-B	101420	ISI/VT/ISI-VT-2.0	ISI-74215A	ISI	C	-	-	-	-	-	-	-	-	-	-	-
F-A,B,C	H- 1		Box Restraint	AUG	-	-	-	-	-	-	-	-	-	-	-	-
1	Standby Liquid Cntrl			OWN	-	-	-	-	-	-	-	-	-	-	-	-
				PRE	-	-	-	-	-	-	-	-	-	-	-	-
F-B	101421	ISI/VT/ISI-VT-2.0	ISI-74215A	ISI	-	-	-	-	-	C	-	-	-	-	-	-
F-A,B,C	H- 2		Box Restraint	AUG	-	-	-	-	-	-	-	-	-	-	-	-
1	Standby Liquid Cntrl			OWN	-	-	-	-	-	-	-	-	-	-	-	-
				PRE	-	-	-	-	-	-	-	-	-	-	-	-
F-B	101422	ISI/VT/ISI-VT-2.0	ISI-74215A	ISI	-	-	-	-	-	C	-	-	-	-	-	-
F-A,B,C	H- 3		Box Restraint	AUG	-	-	-	-	-	-	-	-	-	-	-	-
1	Standby Liquid Cntrl			OWN	-	-	-	-	-	-	-	-	-	-	-	-
				PRE	-	-	-	-	-	-	-	-	-	-	-	-
F-B	101423	ISI/VT/ISI-VT-2.0	ISI-74215A	ISI	-	-	-	-	-	C	-	-	-	-	-	-
F-A,B,C	H- 4		Box Restraint	AUG	-	-	-	-	-	-	-	-	-	-	-	-
1	Standby Liquid Cntrl			OWN	-	-	-	-	-	-	-	-	-	-	-	-
				PRE	-	-	-	-	-	-	-	-	-	-	-	-
B-J	101424	ISI/PT/ISI-PT-1	ISI-74215A	ISI	-	-	-	-	-	-	-	-	S	-	-	-
B9.40	W- 1		Valve-to-Pipe	AUG	-	-	-	-	-	-	-	-	-	-	-	-
1	Standby Liquid Cntrl			OWN	-	-	-	-	-	-	-	-	-	-	-	-
				PRE	-	-	-	-	-	-	-	-	-	-	-	-

MONTICELLO Nuclear Generating Plant
3rd Interval ISI Plan Rev. 3 June 1, 1992 to May 31, 2002

Category, ItemNO, Class	Summary / CompID / System	Scope / Method / Procedure	Iso No. Comp. Desc. Code Case /Note		Period 1				Period 2				Period 3			
					1	2	3	4	1	2	3	4	1	2	3	4
B-J	101425		ISI-74215A	ISI	-	-	-	-	-	-	-	-	-	-	-	-
B9.40	W- 2		Pipe-to-Tee	AUG	-	-	-	-	-	-	-	-	-	-	-	-
1	Standby Liquid Cntrl			OWN	-	-	-	-	-	-	-	-	-	-	-	-
				PRE	-	-	-	-	-	-	-	-	-	-	-	-
B-J	101426		ISI-74215A	ISI	-	-	-	-	-	-	-	-	-	-	-	-
B9.40	W- 3		Tee-to-Reducer	AUG	-	-	-	-	-	-	-	-	-	-	-	-
1	Standby Liquid Cntrl			OWN	-	-	-	-	-	-	-	-	-	-	-	-
				PRE	-	-	-	-	-	-	-	-	-	-	-	-
B-J	101427		ISI-74215A	ISI	-	-	-	-	-	-	-	-	-	-	-	-
B9.40	W- 4		Tee-to-Pipe	AUG	-	-	-	-	-	-	-	-	-	-	-	-
1	Standby Liquid Cntrl			OWN	-	-	-	-	-	-	-	-	-	-	-	-
				PRE	-	-	-	-	-	-	-	-	-	-	-	-
B-J	101428	ISI/PT/ISI-PT-1	ISI-74215A	ISI	-	-	-	-	-	-	-	-	s	-	-	-
B9.40	W- 5		Pipe-to-Elbow	AUG	-	-	-	-	-	-	-	-	-	-	-	-
1	Standby Liquid Cntrl			OWN	-	-	-	-	-	-	-	-	-	-	-	-
				PRE	-	-	-	-	-	-	-	-	-	-	-	-
B-J	101429		ISI-74215A	ISI	-	-	-	-	-	-	-	-	-	-	-	-
B9.40	W- 6		Elbow-to-Pipe	AUG	-	-	-	-	-	-	-	-	-	-	-	-
1	Standby Liquid Cntrl			OWN	-	-	-	-	-	-	-	-	-	-	-	-
				PRE	-	-	-	-	-	-	-	-	-	-	-	-
B-J	101430	ISI/PT/ISI-PT-1	ISI-74215A	ISI	c	-	-	-	-	-	-	-	-	-	-	-
B9.40	W- 7		Pipe-to-Head Fitting	AUG	-	-	-	-	-	-	-	-	-	-	-	-
1	Standby Liquid Cntrl			OWN	-	-	-	-	-	-	-	-	-	-	-	-
				PRE	-	-	-	-	-	-	-	-	-	-	-	-
B-J	101431		ISI-74215A	ISI	-	-	-	-	-	-	-	-	-	-	-	-
B9.40	W- 8		Head Fitting-to-Pipe	AUG	-	-	-	-	-	-	-	-	-	-	-	-
1	Standby Liquid Cntrl		NOTE: DD	OWN	-	-	-	-	-	-	-	-	-	-	-	-
				PRE	-	-	-	-	-	-	-	-	-	-	-	-
B-J	101432		ISI-74215A	ISI	-	-	-	-	-	-	-	-	-	-	-	-
B9.40	W- 9		Pipe-to-Tee	AUG	-	-	-	-	-	-	-	-	-	-	-	-
1	Standby Liquid Cntrl			OWN	-	-	-	-	-	-	-	-	-	-	-	-
				PRE	-	-	-	-	-	-	-	-	-	-	-	-
B-J	101433		ISI-74215A	ISI	-	-	-	-	-	-	-	-	-	-	-	-
B9.40	W-10		Tee-to-Pipe	AUG	-	-	-	-	-	-	-	-	-	-	-	-
1	Standby Liquid Cntrl			OWN	-	-	-	-	-	-	-	-	-	-	-	-
				PRE	-	-	-	-	-	-	-	-	-	-	-	-
B-J	101434	ISI/PT/ISI-PT-1	ISI-74215A	ISI	-	-	-	-	-	-	-	-	-	s	-	-
B9.40	W-11		Pipe-to-Valve	AUG	-	-	-	-	-	-	-	-	-	-	-	-
1	Standby Liquid Cntrl			OWN	-	-	-	-	-	-	-	-	-	-	-	-
				PRE	-	-	-	-	-	-	-	-	-	-	-	-

MONTICELLO Nuclear Generating Plant
3rd Interval ISI Plan Rev. 3 June 1, 1992 to May 31, 2002

Category, ItemNO, Class	Summary / CompID / System	Scope / Method / Procedure	Iso No. Comp. Desc. Code Case /Note		Period 1				Period 2				Period 3			
					1	2	3	4	1	2	3	4	1	2	3	4
B-J	101435	ISI/PT/ISI-PT-1	ISI-74215A	ISI	-	-	-	-	-	-	-	-	-	s	-	-
B9.40	W-12		Valve-to-Pipe	AUG	-	-	-	-	-	-	-	-	-	-	-	-
1	Standby Liquid Cntrl			OWN	-	-	-	-	-	-	-	-	-	-	-	-
				PRE	-	-	-	-	-	-	-	-	-	-	-	-
B-J	101436		ISI-74215A	ISI	-	-	-	-	-	-	-	-	-	-	-	-
B9.40	W-13		Pipe-to-Tee	AUG	-	-	-	-	-	-	-	-	-	-	-	-
1	Standby Liquid Cntrl			OWN	-	-	-	-	-	-	-	-	-	-	-	-
				PRE	-	-	-	-	-	-	-	-	-	-	-	-
B-J	101437		ISI-74215A	ISI	-	-	-	-	-	-	-	-	-	-	-	-
B9.40	W-14		Tee-to-Pipe	AUG	-	-	-	-	-	-	-	-	-	-	-	-
1	Standby Liquid Cntrl			OWN	-	-	-	-	-	-	-	-	-	-	-	-
				PRE	-	-	-	-	-	-	-	-	-	-	-	-
B-J	101438	ISI/PT/ISI-PT-1	ISI-74215A	ISI	c	-	-	-	-	-	-	-	-	-	-	-
B9.40	W-15		Pipe-to-Valve	AUG	-	-	-	-	-	-	-	-	-	-	-	-
1	Standby Liquid Cntrl			OWN	-	-	-	-	-	-	-	-	-	-	-	-
				PRE	-	-	-	-	-	-	-	-	-	-	-	-
B-J	101439		ISI-74215A	ISI	-	-	-	-	-	-	-	-	-	-	-	-
B9.40	W-16		Valve-to-Pipe	AUG	-	-	-	-	-	-	-	-	-	-	-	-
1	Standby Liquid Cntrl			OWN	-	-	-	-	-	-	-	-	-	-	-	-
				PRE	-	-	-	-	-	-	-	-	-	-	-	-
B-J	101440		ISI-74215A	ISI	-	-	-	-	-	-	-	-	-	-	-	-
B9.40	W-17		Pipe-to-Elbow	AUG	-	-	-	-	-	-	-	-	-	-	-	-
1	Standby Liquid Cntrl			OWN	-	-	-	-	-	-	-	-	-	-	-	-
				PRE	-	-	-	-	-	-	-	-	-	-	-	-
B-J	101441	ISI/PT/ISI-PT-1	ISI-74215A	ISI	-	-	-	-	-	c	-	-	-	-	-	-
B9.40	W-18		Elbow-to-Pipe	AUG	-	-	-	-	-	-	-	-	-	-	-	-
1	Standby Liquid Cntrl			OWN	-	-	-	-	-	-	-	-	-	-	-	-
				PRE	-	-	-	-	-	-	-	-	-	-	-	-
B-J	101442	ISI/PT/ISI-PT-1	ISI-74215A	ISI	-	-	-	-	-	c	-	-	-	-	-	-
B9.40	W-19		Pipe-to-Elbow	AUG	-	-	-	-	-	-	-	-	-	-	-	-
1	Standby Liquid Cntrl			OWN	-	-	-	-	-	-	-	-	-	-	-	-
				PRE	-	-	-	-	-	-	-	-	-	-	-	-
B-J	101443		ISI-74215A	ISI	-	-	-	-	-	-	-	-	-	-	-	-
B9.40	W-20		Elbow-to-Pipe	AUG	-	-	-	-	-	-	-	-	-	-	-	-
1	Standby Liquid Cntrl			OWN	-	-	-	-	-	-	-	-	-	-	-	-
				PRE	-	-	-	-	-	-	-	-	-	-	-	-
B-J	101444		ISI-74215A	ISI	-	-	-	-	-	-	-	-	-	-	-	-
B9.40	W-21		Pipe-to-Elbow	AUG	-	-	-	-	-	-	-	-	-	-	-	-
1	Standby Liquid Cntrl			OWN	-	-	-	-	-	-	-	-	-	-	-	-
				PRE	-	-	-	-	-	-	-	-	-	-	-	-

MONTICELLO Nuclear Generating Plant
3rd Interval ISI Plan Rev. 3 June 1, 1992 to May 31, 2002

Category, ItemNO, Class	Summary / CompID / System	Scope / Method / Procedure	Iso No. Comp. Desc. Code Case /Note		Period 1				Period 2				Period 3			
					1	2	3	4	1	2	3	4	1	2	3	4
B-J	101445		ISI-74215A	ISI	-	-	-	-	-	-	-	-	-	-	-	-
B9.40	W-22		Elbow-to-Pipe	AUG	-	-	-	-	-	-	-	-	-	-	-	-
1	Standby Liquid Cntrl			OWN	-	-	-	-	-	-	-	-	-	-	-	-
				PRE	-	-	-	-	-	-	-	-	-	-	-	-
B-J	101446		ISI-74215A	ISI	-	-	-	-	-	-	-	-	-	-	-	-
B9.40	W-23		Pipe-to-Tee	AUG	-	-	-	-	-	-	-	-	-	-	-	-
1	Standby Liquid Cntrl			OWN	-	-	-	-	-	-	-	-	-	-	-	-
				PRE	-	-	-	-	-	-	-	-	-	-	-	-
B-J	101447		ISI-74215A	ISI	-	-	-	-	-	-	-	-	-	-	-	-
B9.40	W-24		Tee-to-Pipe	AUG	-	-	-	-	-	-	-	-	-	-	-	-
1	Standby Liquid Cntrl			OWN	-	-	-	-	-	-	-	-	-	-	-	-
				PRE	-	-	-	-	-	-	-	-	-	-	-	-
B-J	101448		ISI-74215A	ISI	-	-	-	-	-	-	-	-	-	-	-	-
B9.40	W-25		Pipe-to-Reducer	AUG	-	-	-	-	-	-	-	-	-	-	-	-
1	Standby Liquid Cntrl			OWN	-	-	-	-	-	-	-	-	-	-	-	-
				PRE	-	-	-	-	-	-	-	-	-	-	-	-
B-J	101449		ISI-74215A	ISI	-	-	-	-	-	-	-	-	-	-	-	-
B9.40	W-26		Tee-to-Pipe	AUG	-	-	-	-	-	-	-	-	-	-	-	-
1	Standby Liquid Cntrl			OWN	-	-	-	-	-	-	-	-	-	-	-	-
				PRE	-	-	-	-	-	-	-	-	-	-	-	-
B-J	101450		ISI-74215A	ISI	-	-	-	-	-	-	-	-	-	-	-	-
B9.40	W-27		Pipe-to-Tee	AUG	-	-	-	-	-	-	-	-	-	-	-	-
1	Standby Liquid Cntrl			OWN	-	-	-	-	-	-	-	-	-	-	-	-
				PRE	-	-	-	-	-	-	-	-	-	-	-	-
B-J	101451		ISI-74215A	ISI	-	-	-	-	-	-	-	-	-	-	-	-
B9.40	W-28		Tee-to-Pipe	AUG	-	-	-	-	-	-	-	-	-	-	-	-
1	Standby Liquid Cntrl			OWN	-	-	-	-	-	-	-	-	-	-	-	-
				PRE	-	-	-	-	-	-	-	-	-	-	-	-
B-J	101452		ISI-74215A	ISI	-	-	-	-	-	-	-	-	-	-	-	-
B9.40	W-29		Pipe-to-Reducer	AUG	-	-	-	-	-	-	-	-	-	-	-	-
1	Standby Liquid Cntrl			OWN	-	-	-	-	-	-	-	-	-	-	-	-
				PRE	-	-	-	-	-	-	-	-	-	-	-	-
B-J	101453		ISI-74215A	ISI	-	-	-	-	-	-	-	-	-	-	-	-
B9.40	W-30		Tee-to-Pipe	AUG	-	-	-	-	-	-	-	-	-	-	-	-
1	Standby Liquid Cntrl			OWN	-	-	-	-	-	-	-	-	-	-	-	-
				PRE	-	-	-	-	-	-	-	-	-	-	-	-
B-J	101454		ISI-74215A	ISI	-	-	-	-	-	-	-	-	-	-	-	-
B9.40	W-31		Pipe-to-Coupling	AUG	-	-	-	-	-	-	-	-	-	-	-	-
1	Standby Liquid Cntrl			OWN	-	-	-	-	-	-	-	-	-	-	-	-
				PRE	-	-	-	-	-	-	-	-	-	-	-	-

MONTICELLO Nuclear Generating Plant
3rd Interval ISI Plan Rev. 3 June 1, 1992 to May 31, 2002

Category, ItemNO, Class	Summary / CompID / System	Scope / Method / Procedure	Iso No. Comp. Desc. Code Case /Note		Period 1				Period 2				Period 3			
					1	2	3	4	1	2	3	4	1	2	3	4
B-J	101455		ISI-74215A	ISI	-	-	-	-	-	-	-	-	-	-	-	-
B9.21	W-32		Coupling-to-Tee	AUG	-	-	-	-	-	-	-	-	-	-	-	-
1	Standby Liquid Cntrl			OWN	-	-	-	-	-	-	-	-	-	-	-	-
				PRE	-	-	-	-	-	-	-	-	-	-	-	-
B-J	101456		ISI-74215A	ISI	-	-	-	-	-	-	-	-	-	-	-	-
B9.21	W-33		Tee-to-Coupling	AUG	-	-	-	-	-	-	-	-	-	-	-	-
1	Standby Liquid Cntrl			OWN	-	-	-	-	-	-	-	-	-	-	-	-
				PRE	-	-	-	-	-	-	-	-	-	-	-	-
B-J	101457	ISI/PT/ISI-PT-1	ISI-74215A	ISI	-	-	-	-	-	-	-	-	s	-	-	-
B9.21	W-34		Tee-to-Safe End	AUG	-	-	-	-	-	-	-	-	-	-	-	-
1	Standby Liquid Cntrl			OWN	-	-	-	-	-	-	-	-	-	-	-	-
				PRE	-	-	-	-	-	-	-	-	-	-	-	-
B-F	101458	ISI/PT/ISI-PT-1	ISI-74215A	ISI	-	-	-	-	-	-	-	-	s	-	-	-
B5.20	W-35		Safe End-to-Nozzle	AUG	-	-	-	-	-	-	-	-	-	-	-	-
1	Standby Liquid Cntrl		NOTE: CC	OWN	-	-	-	-	-	-	-	-	-	-	-	-
				PRE	-	-	-	-	-	-	-	-	-	-	-	-
F-C	101460	ISI/VT/ISI-VT-2.0	ISI-782A	ISI	c	-	-	-	B	-	-	-	-	-	-	-
F-A,B,C	H- 1		Hanger	AUG	-	-	-	-	-	-	-	-	-	-	-	-
1	Head Vent			OWN	-	-	-	-	-	-	-	-	-	-	-	-
				PRE	-	-	-	-	-	-	-	-	-	-	-	-
F-A	101461	ISI/VT/ISI-VT-2.0	ISI-782A	ISI	-	-	-	-	c	-	-	-	-	b	-	-
F-A,B,C	H- 2		Hanger	AUG	-	-	-	-	-	-	-	-	-	-	-	-
1	Head Vent			OWN	-	-	-	-	-	-	-	-	-	-	-	-
				PRE	-	-	-	-	-	-	-	-	-	-	-	-
B-J	101462		ISI-782A	ISI	-	-	-	-	-	-	-	-	-	-	-	-
B9.40	W- 1		Flange-to-Pipe	AUG	-	-	-	-	-	-	-	-	-	-	-	-
1	Head Vent			OWN	-	-	-	-	-	-	-	-	-	-	-	-
				PRE	-	-	-	-	-	-	-	-	-	-	-	-
B-J	101463		ISI-782A	ISI	-	-	-	-	-	-	-	-	-	-	-	-
B9.40	W- 2		Pipe-to-Elbow	AUG	-	-	-	-	-	-	-	-	-	-	-	-
1	Head Vent			OWN	-	-	-	-	-	-	-	-	-	-	-	-
				PRE	-	-	-	-	-	-	-	-	-	-	-	-
B-J	101464		ISI-782A	ISI	-	-	-	-	-	-	-	-	-	-	-	-
B9.40	W- 3		Elbow-to-Pipe	AUG	-	-	-	-	-	-	-	-	-	-	-	-
1	Head Vent			OWN	-	-	-	-	-	-	-	-	-	-	-	-
				PRE	-	-	-	-	-	-	-	-	-	-	-	-
B-J	101465		ISI-782A	ISI	-	-	-	-	-	-	-	-	-	-	-	-
B9.40	W- 4		Pipe-to-Elbow	AUG	-	-	-	-	-	-	-	-	-	-	-	-
1	Head Vent			OWN	-	-	-	-	-	-	-	-	-	-	-	-
				PRE	-	-	-	-	-	-	-	-	-	-	-	-

MONTICELLO Nuclear Generating Plant
3rd Interval ISI Plan Rev. 3 June 1, 1992 to May 31, 2002

Category, ItemNO, Class	Summary / CompID / System	Scope / Method / Procedure	Iso No. Comp. Desc. Code Case /Note		Period 1				Period 2				Period 3			
					1	2	3	4	1	2	3	4	1	2	3	4
B-J	101466	ISI/MT/ISI-MT-1	ISI-782A	ISI	-	-	-	-	-	c	-	-	-	b	-	-
B9.40	W- 5		Elbow-to-Pipe	AUG	-	-	-	-	-	-	-	-	-	-	-	-
1	Head Vent			OWN	-	-	-	-	-	-	-	-	-	-	-	-
				PRE	-	-	-	-	-	-	-	-	-	-	-	-
B-J	101467		ISI-782A	ISI	-	-	-	-	-	-	-	-	-	-	-	-
B9.40	W- 6		Pipe-to-Coupling	AUG	-	-	-	-	-	-	-	-	-	-	-	-
1	Head Vent			OWN	-	-	-	-	-	-	-	-	-	-	-	-
				PRE	-	-	-	-	-	-	-	-	-	-	-	-
B-J	101468		ISI-782A	ISI	-	-	-	-	-	-	-	-	-	-	-	-
B9.40	W- 7		Coupling-to-Pipe	AUG	-	-	-	-	-	-	-	-	-	-	-	-
1	Head Vent			OWN	-	-	-	-	-	-	-	-	-	-	-	-
				PRE	-	-	-	-	-	-	-	-	-	-	-	-
B-J	101469		ISI-782A	ISI	-	-	-	-	-	-	-	-	-	-	-	-
B9.40	W- 8		Pipe-to-Elbow	AUG	-	-	-	-	-	-	-	-	-	-	-	-
1	Head Vent			OWN	-	-	-	-	-	-	-	-	-	-	-	-
				PRE	-	-	-	-	-	-	-	-	-	-	-	-
B-J	101470		ISI-782A	ISI	-	-	-	-	-	-	-	-	-	-	-	-
B9.40	W- 9		Elbow-to-Pipe	AUG	-	-	-	-	-	-	-	-	-	-	-	-
1	Head Vent			OWN	-	-	-	-	-	-	-	-	-	-	-	-
				PRE	-	-	-	-	-	-	-	-	-	-	-	-
B-J	101471	ISI/MT/ISI-MT-1	ISI-782A	ISI	-	-	-	-	-	c	-	-	-	b	-	-
B9.40	W-10		Pipe-to-Elbow	AUG	-	-	-	-	-	-	-	-	-	-	-	-
1	Head Vent			OWN	-	-	-	-	-	-	-	-	-	-	-	-
				PRE	-	-	-	-	-	-	-	-	-	-	-	-
B-J	101472		ISI-782A	ISI	-	-	-	-	-	-	-	-	-	-	-	-
B9.40	W-11		Elbow-to-Pipe	AUG	-	-	-	-	-	-	-	-	-	-	-	-
1	Head Vent			OWN	-	-	-	-	-	-	-	-	-	-	-	-
				PRE	-	-	-	-	-	-	-	-	-	-	-	-
B-J	101473		ISI-782A	ISI	-	-	-	-	-	-	-	-	-	-	-	-
B9.40	W-12		Pipe-to-Tee	AUG	-	-	-	-	-	-	-	-	-	-	-	-
1	Head Vent			OWN	-	-	-	-	-	-	-	-	-	-	-	-
				PRE	-	-	-	-	-	-	-	-	-	-	-	-
B-J	101474		ISI-782A	ISI	-	-	-	-	-	-	-	-	-	-	-	-
B9.40	W-13		Pipe-to-Boss	AUG	-	-	-	-	-	-	-	-	-	-	-	-
1	Head Vent			OWN	-	-	-	-	-	-	-	-	-	-	-	-
				PRE	-	-	-	-	-	-	-	-	-	-	-	-
B-J	101475		ISI-782A	ISI	-	-	-	-	-	-	-	-	-	-	-	-
B9.40	W-14		Valve-to-Pipe	AUG	-	-	-	-	-	-	-	-	-	-	-	-
1	Head Vent			OWN	-	-	-	-	-	-	-	-	-	-	-	-
				PRE	-	-	-	-	-	-	-	-	-	-	-	-

MONTICELLO Nuclear Generating Plant
3rd Interval ISI Plan Rev. 3 June 1, 1992 to May 31, 2002

Category, ItemNO, Class	Summary / CompID / System	Scope / Method / Procedure	Iso No. Comp. Desc. Code Case /Note		Period 1				Period 2				Period 3			
					1	2	3	4	1	2	3	4	1	2	3	4
B-J	101476	ISI/MT/ISI-MT-1	ISI-782A	ISI	-	-	-	-	-	c	-	-	-	b	-	-
B9.40	W-15		Pipe-to-Valve	AUG	-	-	-	-	-	-	-	-	-	-	-	-
1	Head Vent			OWN	-	-	-	-	-	-	-	-	-	-	-	-
				PRE	-	-	-	-	-	-	-	-	-	-	-	-
B-J	101477		ISI-782A	ISI	-	-	-	-	-	-	-	-	-	-	-	-
B9.40	W-16		Elbow-to-Pipe	AUG	-	-	-	-	-	-	-	-	-	-	-	-
1	Head Vent			OWN	-	-	-	-	-	-	-	-	-	-	-	-
				PRE	-	-	-	-	-	-	-	-	-	-	-	-
B-J	101478		ISI-782A	ISI	-	-	-	-	-	-	-	-	-	-	-	-
B9.40	W-17		Pipe-to-Elbow	AUG	-	-	-	-	-	-	-	-	-	-	-	-
1	Head Vent			OWN	-	-	-	-	-	-	-	-	-	-	-	-
				PRE	-	-	-	-	-	-	-	-	-	-	-	-
B-J	101479		ISI-782A	ISI	-	-	-	-	-	-	-	-	-	-	-	-
B9.40	W-18		Tee-to-Pipe	AUG	-	-	-	-	-	-	-	-	-	-	-	-
1	Head Vent			OWN	-	-	-	-	-	-	-	-	-	-	-	-
				PRE	-	-	-	-	-	-	-	-	-	-	-	-
B-J	101480		ISI-782A	ISI	-	-	-	-	-	-	-	-	-	-	-	-
B9.40	W-19		Tee-to-Pipe	AUG	-	-	-	-	-	-	-	-	-	-	-	-
1	Head Vent			OWN	-	-	-	-	-	-	-	-	-	-	-	-
				PRE	-	-	-	-	-	-	-	-	-	-	-	-
B-J	101481		ISI-782A	ISI	-	-	-	-	-	-	-	-	-	-	-	-
B9.40	W-20		Pipe-to-Elbow	AUG	-	-	-	-	-	-	-	-	-	-	-	-
1	Head Vent			OWN	-	-	-	-	-	-	-	-	-	-	-	-
				PRE	-	-	-	-	-	-	-	-	-	-	-	-
B-J	101482		ISI-782A	ISI	-	-	-	-	-	-	-	-	-	-	-	-
B9.40	W-21		Elbow-to-Pipe	AUG	-	-	-	-	-	-	-	-	-	-	-	-
1	Head Vent			OWN	-	-	-	-	-	-	-	-	-	-	-	-
				PRE	-	-	-	-	-	-	-	-	-	-	-	-
B-J	101483	ISI/MT/ISI-MT-1	ISI-782A	ISI	-	-	-	-	-	c	-	-	-	b	-	-
B9.40	W-22		Pipe-to-Elbow	AUG	-	-	-	-	-	-	-	-	-	-	-	-
1	Head Vent			OWN	-	-	-	-	-	-	-	-	-	-	-	-
				PRE	-	-	-	-	-	-	-	-	-	-	-	-
B-J	101484		ISI-782A	ISI	-	-	-	-	-	-	-	-	-	-	-	-
B9.40	W-23		Elbow-to-Pipe	AUG	-	-	-	-	-	-	-	-	-	-	-	-
1	Head Vent			OWN	-	-	-	-	-	-	-	-	-	-	-	-
				PRE	-	-	-	-	-	-	-	-	-	-	-	-
B-J	101485		ISI-782A	ISI	-	-	-	-	-	-	-	-	-	-	-	-
B9.40	W-24		Pipe-to-Tee	AUG	-	-	-	-	-	-	-	-	-	-	-	-
1	Head Vent			OWN	-	-	-	-	-	-	-	-	-	-	-	-
				PRE	-	-	-	-	-	-	-	-	-	-	-	-

MONTICELLO Nuclear Generating Plant
3rd Interval ISI Plan Rev. 3 June 1, 1992 to May 31, 2002

Category, ItemNO, Class	Summary / CompID / System	Scope / Method / Procedure	Iso No. Comp. Desc. Code Case /Note		Period 1				Period 2				Period 3			
					1	2	3	4	1	2	3	4	1	2	3	4
B-J	101486		ISI-782A	ISI	-	-	-	-	-	-	-	-	-	-	-	-
B9.40	W-25		Tee-to-Reducer	AUG	-	-	-	-	-	-	-	-	-	-	-	-
1	Head Vent			OWN	-	-	-	-	-	-	-	-	-	-	-	-
				PRE	-	-	-	-	-	-	-	-	-	-	-	-
B-J	101487	ISI/PT/ISI-PT-1	ISI-782A	ISI	c	-	-	-	-	-	-	-	-	-	-	-
B9.40	W-26		Tee-to-Pipe	AUG	-	-	-	-	-	-	-	-	-	-	-	-
1	Head Vent			OWN	-	-	-	-	-	-	-	-	-	-	-	-
				PRE	-	-	-	-	-	-	-	-	-	-	-	-
B-J	101488	ISI/PT/ISI-PT-1	ISI-782A	ISI	c	-	-	-	-	-	-	-	-	-	-	-
B9.40	W-27		Pipe-to-Valve	AUG	-	-	-	-	-	-	-	-	-	-	-	-
1	Head Vent			OWN	-	-	-	-	-	-	-	-	-	-	-	-
				PRE	-	-	-	-	-	-	-	-	-	-	-	-
B-J	101489	ISI/PT/ISI-PT-1	ISI-782A	ISI	c	-	-	-	-	-	-	-	-	-	-	-
B9.40	W-28		Valve-to-Pipe	AUG	-	-	-	-	-	-	-	-	-	-	-	-
1	Head Vent			OWN	-	-	-	-	-	-	-	-	-	-	-	-
				PRE	-	-	-	-	-	-	-	-	-	-	-	-
B-J	101490	ISI/PT/ISI-PT-1	ISI-782A	ISI	-	-	-	-	-	-	-	-	-	s	-	-
B9.40	W-29		Pipe-to-Valve	AUG	-	-	-	-	-	-	-	-	-	-	-	-
1	Head Vent			OWN	-	-	-	-	-	-	-	-	-	-	-	-
				PRE	-	-	-	-	-	-	-	-	-	-	-	-
B-G-2	101491	ISI/VT/ISI-VT-1.0	ISI-782A-A	ISI	-	-	-	-	-	c	-	-	b	-	-	-
B7.50	B- 1		Flange Bolts	AUG	-	-	-	-	-	-	-	-	-	-	-	-
1	Head Vent			OWN	-	-	-	-	-	-	-	-	-	-	-	-
				PRE	-	-	-	-	-	-	-	-	-	-	-	-
B-G-2	101492	ISI/VT/ISI-VT-1.0	ISI-782A-A	ISI	c	-	-	-	-	B	-	-	-	-	-	-
B7.50	B- 2		Flange Bolts	AUG	-	-	-	-	-	-	-	-	-	-	-	-
1	Head Vent			OWN	-	-	-	-	-	-	-	-	-	-	-	-
				PRE	-	-	-	-	-	-	-	-	-	-	-	-
B-J	101494	ISI/MT/ISI-MT-1	ISI-782A-A	ISI	-	-	-	-	-	-	-	-	-	s	-	-
B9.11	W- 1	ISI/UT/ISI-UT-1	Flange-to-Reducer	AUG	-	-	-	-	-	-	-	-	-	-	-	-
1	Head Vent			OWN	-	-	-	-	-	-	-	-	-	-	-	-
				PRE	-	-	-	-	-	-	-	-	-	-	-	-
B-J	101495		ISI-782A-A	ISI	-	-	-	-	-	-	-	-	-	-	-	-
B9.40	W- 2		Reducer-to-Pipe	AUG	-	-	-	-	-	-	-	-	-	-	-	-
1	Head Vent			OWN	-	-	-	-	-	-	-	-	-	-	-	-
				PRE	-	-	-	-	-	-	-	-	-	-	-	-
B-J	101496		ISI-782A-A	ISI	-	-	-	-	-	-	-	-	-	-	-	-
B9.40	W- 3		Pipe-to-Coupling	AUG	-	-	-	-	-	-	-	-	-	-	-	-
1	Head Vent			OWN	-	-	-	-	-	-	-	-	-	-	-	-
				PRE	-	-	-	-	-	-	-	-	-	-	-	-

MONTICELLO Nuclear Generating Plant
3rd Interval ISI Plan Rev. 3 June 1, 1992 to May 31, 2002

Category, ItemNO, Class	Summary / CompID / System	Scope / Method / Procedure	Iso No. Comp. Desc. Code Case /Note		Period 1				Period 2				Period 3			
					1	2	3	4	1	2	3	4	1	2	3	4
B-J	101497		ISI-782A-A	ISI	-	-	-	-	-	-	-	-	-	-	-	-
B9.40	W- 4		Coupling-to-Pipe	AUG	-	-	-	-	-	-	-	-	-	-	-	-
1	Head Vent			OWN	-	-	-	-	-	-	-	-	-	-	-	-
				PRE	-	-	-	-	-	-	-	-	-	-	-	-
B-J	101498	ISI/MT/ISI-MT-1	ISI-782A-A	ISI	-	c	-	-	-	-	-	-	-	-	-	-
B9.40	W- 5		Pipe-to-Tee	AUG	-	-	-	-	-	-	-	-	-	-	-	-
1	Head Vent			OWN	-	-	-	-	-	-	-	-	-	-	-	-
				PRE	-	-	-	-	-	-	-	-	-	-	-	-
B-J	101499		ISI-782A-A	ISI	-	-	-	-	-	-	-	-	-	-	-	-
B9.40	W- 6		Tee-to-Reducer	AUG	-	-	-	-	-	-	-	-	-	-	-	-
1	Head Vent			OWN	-	-	-	-	-	-	-	-	-	-	-	-
				PRE	-	-	-	-	-	-	-	-	-	-	-	-
B-J	101500		ISI-782A-A	ISI	-	-	-	-	-	-	-	-	-	-	-	-
B9.40	W- 7		Tee-to-Pipe	AUG	-	-	-	-	-	-	-	-	-	-	-	-
1	Head Vent			OWN	-	-	-	-	-	-	-	-	-	-	-	-
				PRE	-	-	-	-	-	-	-	-	-	-	-	-
B-J	101501		ISI-782A-A	ISI	-	-	-	-	-	-	-	-	-	-	-	-
B9.40	W- 8		Pipe-to-Elbow	AUG	-	-	-	-	-	-	-	-	-	-	-	-
1	Head Vent			OWN	-	-	-	-	-	-	-	-	-	-	-	-
				PRE	-	-	-	-	-	-	-	-	-	-	-	-
B-J	101502	ISI/MT/ISI-MT-1	ISI-782A-A	ISI	-	c	-	-	-	-	-	-	-	-	-	-
B9.40	W- 9		Elbow-to-Pipe	AUG	-	-	-	-	-	-	-	-	-	-	-	-
1	Head Vent			OWN	-	-	-	-	-	-	-	-	-	-	-	-
				PRE	-	-	-	-	-	-	-	-	-	-	-	-
B-J	101503		ISI-782A-A	ISI	-	-	-	-	-	-	-	-	-	-	-	-
B9.40	W-10		Pipe-to-Elbow	AUG	-	-	-	-	-	-	-	-	-	-	-	-
1	Head Vent			OWN	-	-	-	-	-	-	-	-	-	-	-	-
				PRE	-	-	-	-	-	-	-	-	-	-	-	-
B-J	101504		ISI-782A-A	ISI	-	-	-	-	-	-	-	-	-	-	-	-
B9.40	W-11		Elbow-to-Pipe	AUG	-	-	-	-	-	-	-	-	-	-	-	-
1	Head Vent			OWN	-	-	-	-	-	-	-	-	-	-	-	-
				PRE	-	-	-	-	-	-	-	-	-	-	-	-
B-J	101505		ISI-782A-A	ISI	-	-	-	-	-	-	-	-	-	-	-	-
B9.40	W-12		Pipe-to-Elbow	AUG	-	-	-	-	-	-	-	-	-	-	-	-
1	Head Vent			OWN	-	-	-	-	-	-	-	-	-	-	-	-
				PRE	-	-	-	-	-	-	-	-	-	-	-	-
B-J	101506		ISI-782A-A	ISI	-	-	-	-	-	-	-	-	-	-	-	-
B9.40	W-13		Elbow-to-Pipe	AUG	-	-	-	-	-	-	-	-	-	-	-	-
1	Head Vent			OWN	-	-	-	-	-	-	-	-	-	-	-	-
				PRE	-	-	-	-	-	-	-	-	-	-	-	-

MONTICELLO Nuclear Generating Plant
3rd Interval ISI Plan Rev. 3 June 1, 1992 to May 31, 2002

Category, ItemNO, Class	Summary / CompID / System	Scope / Method / Procedure	Iso No. Comp. Desc. Code Case /Note		Period 1				Period 2				Period 3			
					1	2	3	4	1	2	3	4	1	2	3	4
B-J	101507		ISI-782A-A	ISI	-	-	-	-	-	-	-	-	-	-	-	-
B9.40	W-14		Pipe-to-Elbow	AUG	-	-	-	-	-	-	-	-	-	-	-	-
1	Head Vent			OWN	-	-	-	-	-	-	-	-	-	-	-	-
				PRE	-	-	-	-	-	-	-	-	-	-	-	-
B-J	101508	ISI/MT/ISI-MT-1	ISI-782A-A	ISI	-	c	-	-	-	-	-	-	-	-	-	-
B9.40	W-15		Elbow-to-Pipe	AUG	-	-	-	-	-	-	-	-	-	-	-	-
1	Head Vent			OWN	-	-	-	-	-	-	-	-	-	-	-	-
				PRE	-	-	-	-	-	-	-	-	-	-	-	-
B-J	101509		ISI-782A-A	ISI	-	-	-	-	-	-	-	-	-	-	-	-
B9.40	W-16		Pipe-to-Elbow	AUG	-	-	-	-	-	-	-	-	-	-	-	-
1	Head Vent			OWN	-	-	-	-	-	-	-	-	-	-	-	-
				PRE	-	-	-	-	-	-	-	-	-	-	-	-
B-J	101510		ISI-782A-A	ISI	-	-	-	-	-	-	-	-	-	-	-	-
B9.40	W-17		Elbow-to-Pipe	AUG	-	-	-	-	-	-	-	-	-	-	-	-
1	Head Vent			OWN	-	-	-	-	-	-	-	-	-	-	-	-
				PRE	-	-	-	-	-	-	-	-	-	-	-	-
B-J	101511		ISI-782A-A	ISI	-	-	-	-	-	-	-	-	-	-	-	-
B9.40	W-18		Pipe-to-Elbow	AUG	-	-	-	-	-	-	-	-	-	-	-	-
1	Head Vent			OWN	-	-	-	-	-	-	-	-	-	-	-	-
				PRE	-	-	-	-	-	-	-	-	-	-	-	-
B-J	101512		ISI-782A-A	ISI	-	-	-	-	-	-	-	-	-	-	-	-
B9.40	W-19		Elbow-to-Pipe	AUG	-	-	-	-	-	-	-	-	-	-	-	-
1	Head Vent			OWN	-	-	-	-	-	-	-	-	-	-	-	-
				PRE	-	-	-	-	-	-	-	-	-	-	-	-
B-J	101513	ISI/MT/ISI-MT-1	ISI-782A-A	ISI	-	c	-	-	-	-	-	-	-	-	-	-
B9.40	W-20		Pipe-to-Elbow	AUG	-	-	-	-	-	-	-	-	-	-	-	-
1	Head Vent			OWN	-	-	-	-	-	-	-	-	-	-	-	-
				PRE	-	-	-	-	-	-	-	-	-	-	-	-
B-J	101514		ISI-782A-A	ISI	-	-	-	-	-	-	-	-	-	-	-	-
B9.40	W-21		Elbow-to-Pipe	AUG	-	-	-	-	-	-	-	-	-	-	-	-
1	Head Vent			OWN	-	-	-	-	-	-	-	-	-	-	-	-
				PRE	-	-	-	-	-	-	-	-	-	-	-	-
B-J	101515		ISI-782A-A	ISI	-	-	-	-	-	-	-	-	-	-	-	-
B9.40	W-22		Pipe-to-Elbow	AUG	-	-	-	-	-	-	-	-	-	-	-	-
1	Head Vent			OWN	-	-	-	-	-	-	-	-	-	-	-	-
				PRE	-	-	-	-	-	-	-	-	-	-	-	-
B-J	101516		ISI-782A-A	ISI	-	-	-	-	-	-	-	-	-	-	-	-
B9.40	W-23		Elbow-to-Pipe	AUG	-	-	-	-	-	-	-	-	-	-	-	-
1	Head Vent			OWN	-	-	-	-	-	-	-	-	-	-	-	-
				PRE	-	-	-	-	-	-	-	-	-	-	-	-

MONTICELLO Nuclear Generating Plant
3rd Interval ISI Plan Rev. 3 June 1, 1992 to May 31, 2002

Category, ItemNO, Class	Summary / CompID / System	Scope / Method / Procedure	Iso No. Comp. Desc. Code Case /Note		Period 1				Period 2				Period 3			
					1	2	3	4	1	2	3	4	1	2	3	4
B-J	101517	ISI/MT/ISI-MT-1	ISI-782A-A	ISI	-	c	-	-	-	-	-	-	-	-	-	-
B9.40	W-24		Pipe-to-Elbow	AUG	-	-	-	-	-	-	-	-	-	-	-	-
1	Head Vent			OWN	-	-	-	-	-	-	-	-	-	-	-	-
				PRE	-	-	-	-	-	-	-	-	-	-	-	-
B-J	101518		ISI-782A-A	ISI	-	-	-	-	-	-	-	-	-	-	-	-
B9.40	W-25		Elbow-to-Pipe	AUG	-	-	-	-	-	-	-	-	-	-	-	-
1	Head Vent			OWN	-	-	-	-	-	-	-	-	-	-	-	-
				PRE	-	-	-	-	-	-	-	-	-	-	-	-
B-J	101519		ISI-782A-A	ISI	-	-	-	-	-	-	-	-	-	-	-	-
B9.40	W-26		Pipe-to-Flange	AUG	-	-	-	-	-	-	-	-	-	-	-	-
1	Head Vent			OWN	-	-	-	-	-	-	-	-	-	-	-	-
				PRE	-	-	-	-	-	-	-	-	-	-	-	-
F-B	101520	ISI/VT/ISI-VT-2.0	ISI-786A	ISI	-	-	-	-	-	-	-	-	s	-	-	-
F-A,B,C	H- 1		Box Support	AUG	-	-	-	-	-	-	-	-	-	-	-	-
1	MS Condensate Lkoff			OWN	-	-	-	-	-	-	-	-	-	-	-	-
				PRE	-	-	-	-	-	-	-	-	-	-	-	-
F-B	101521	ISI/VT/ISI-VT-2.0	ISI-786A	ISI	c	-	-	-	-	-	-	-	-	-	-	-
F-A,B,C	H- 2		Box Support	AUG	-	-	-	-	-	-	-	-	-	-	-	-
1	MS Condensate Lkoff			OWN	-	-	-	-	-	-	-	-	-	-	-	-
				PRE	-	-	-	-	-	-	-	-	-	-	-	-
F-B	101522	ISI/VT/ISI-VT-2.0	ISI-786A	ISI	c	-	-	-	-	-	-	-	-	-	-	-
F-A,B,C	H- 3		Linear Support	AUG	-	-	-	-	-	-	-	-	-	-	-	-
1	MS Condensate Lkoff			OWN	-	-	-	-	-	-	-	-	-	-	-	-
				PRE	-	-	-	-	-	-	-	-	-	-	-	-
F-B	101523	ISI/VT/ISI-VT-2.0	ISI-786A	ISI	-	-	-	-	-	c	-	-	-	-	-	-
F-A,B,C	H- 4		Box Support	AUG	-	-	-	-	-	-	-	-	-	-	-	-
1	MS Condensate Lkoff			OWN	-	-	-	-	-	-	-	-	-	-	-	-
				PRE	-	-	-	-	-	-	-	-	-	-	-	-
B-J	101524		ISI-786A	ISI	-	-	-	-	-	-	-	-	-	-	-	-
B9.21	W- 1		Cap-to-Pipe	AUG	-	-	-	-	-	-	-	-	-	-	-	-
1	MS Condensate Lkoff			OWN	-	-	-	-	-	-	-	-	-	-	-	-
				PRE	-	-	-	-	-	-	-	-	-	-	-	-
B-J	101525		ISI-786A	ISI	-	-	-	-	-	-	-	-	-	-	-	-
B9.32	W- 2		Boss-to-Pipe	AUG	-	-	-	-	-	-	-	-	-	-	-	-
1	MS Condensate Lkoff			OWN	-	-	-	-	-	-	-	-	-	-	-	-
				PRE	-	-	-	-	-	-	-	-	-	-	-	-
B-J	101526		ISI-786A	ISI	-	-	-	-	-	-	-	-	-	-	-	-
B9.32	W- 3		Boss-to-Pipe	AUG	-	-	-	-	-	-	-	-	-	-	-	-
1	MS Condensate Lkoff			OWN	-	-	-	-	-	-	-	-	-	-	-	-
				PRE	-	-	-	-	-	-	-	-	-	-	-	-

MONTICELLO Nuclear Generating Plant
3rd Interval ISI Plan Rev. 3 June 1, 1992 to May 31, 2002

Category, ItemNO, Class	Summary / CompID / System	Scope / Method / Procedure	Iso No. Comp. Desc. Code Case /Note		Period 1				Period 2				Period 3			
					1	2	3	4	1	2	3	4	1	2	3	4
B-J	101527		ISI-786A	ISI	-	-	-	-	-	-	-	-	-	-	-	-
B9.32	W- 4		Boss-to-Pipe	AUG	-	-	-	-	-	-	-	-	-	-	-	-
1	MS Condensate Lkoff			OWN	-	-	-	-	-	-	-	-	-	-	-	-
				PRE	-	-	-	-	-	-	-	-	-	-	-	-
B-J	101528		ISI-786A	ISI	-	-	-	-	-	-	-	-	-	-	-	-
B9.21	W- 6		Pipe-to-Pipe	AUG	-	-	-	-	-	-	-	-	-	-	-	-
1	MS Condensate Lkoff			OWN	-	-	-	-	-	-	-	-	-	-	-	-
				PRE	-	-	-	-	-	-	-	-	-	-	-	-
B-J	101529	ISI/MT/ISI-MT-1	ISI-786A	ISI	-	-	-	-	-	c	-	-	-	-	-	-
B9.21	W- 7		Pipe-to-Valve	AUG	-	-	-	-	-	-	-	-	-	-	-	-
1	MS Condensate Lkoff			OWN	-	-	-	-	-	-	-	-	-	-	-	-
				PRE	-	-	-	-	-	-	-	-	-	-	-	-
B-J	101530	ISI/MT/ISI-MT-1	ISI-786A	ISI	-	-	-	-	-	c	-	-	-	-	-	-
B9.21	W- 8		Valve-to-Pipe	AUG	-	-	-	-	-	-	-	-	-	-	-	-
1	MS Condensate Lkoff			OWN	-	-	-	-	-	-	-	-	-	-	-	-
				PRE	-	-	-	-	-	-	-	-	-	-	-	-
B-J	101531		ISI-786A	ISI	-	-	-	-	-	-	-	-	-	-	-	-
B9.21	W- 9		Elbow-to-Elbow	AUG	-	-	-	-	-	-	-	-	-	-	-	-
1	MS Condensate Lkoff			OWN	-	-	-	-	-	-	-	-	-	-	-	-
				PRE	-	-	-	-	-	-	-	-	-	-	-	-
B-J	101532	ISI/MT/ISI-MT-1	ISI-786A	ISI	c	-	-	-	-	-	-	-	-	-	-	-
B9.21	W-10		Elbow-to-Pipe	AUG	-	-	-	-	-	-	-	-	-	-	-	-
1	MS Condensate Lkoff			OWN	-	-	-	-	-	-	-	-	-	-	-	-
				PRE	-	-	-	-	-	-	-	-	-	-	-	-
B-J	101533		ISI-786A	ISI	-	-	-	-	-	-	-	-	-	-	-	-
B9.21	W-11		Pipe-to-Pipe	AUG	-	-	-	-	-	-	-	-	-	-	-	-
1	MS Condensate Lkoff		NOTE:DD	OWN	-	-	-	-	-	-	-	-	-	-	-	-
				PRE	-	-	-	-	-	-	-	-	-	-	-	-
B-J	101534	ISI/MT/ISI-MT-1	ISI-786A	ISI	-	-	-	-	-	-	-	-	s	-	-	-
B9.21	W-12		Pipe-to-Pipe	AUG	-	-	-	-	-	-	-	-	-	-	-	-
1	MS Condensate Lkoff			OWN	-	-	-	-	-	-	-	-	-	-	-	-
				PRE	-	-	-	-	-	-	-	-	-	-	-	-
B-J	101535		ISI-786A	ISI	-	-	-	-	-	-	-	-	-	-	-	-
B9.21	W-13		Pipe-to-Elbow	AUG	-	-	-	-	-	-	-	-	-	-	-	-
1	MS Condensate Lkoff			OWN	-	-	-	-	-	-	-	-	-	-	-	-
				PRE	-	-	-	-	-	-	-	-	-	-	-	-
B-J	101536	ISI/MT/ISI-MT-1	ISI-786A	ISI	-	-	-	-	-	c	-	-	-	-	-	-
B9.21	W-14		Elbow-to-Valve	AUG	-	-	-	-	-	-	-	-	-	-	-	-
1	MS Condensate Lkoff			OWN	-	-	-	-	-	-	-	-	-	-	-	-
				PRE	-	-	-	-	-	-	-	-	-	-	-	-

MONTICELLO Nuclear Generating Plant
3rd Interval ISI Plan Rev. 3 June 1, 1992 to May 31, 2002

Category, ItemNO, Class	Summary / CompID / System	Scope / Method / Procedure	Iso No. Comp. Desc. Code Case /Note		Period 1				Period 2				Period 3			
					1	2	3	4	1	2	3	4	1	2	3	4
B-J	101537		ISI-786A	ISI	-	-	-	-	-	-	-	-	-	-	-	-
B9.40	W-15		Valve-to-Pipe	AUG	-	-	-	-	-	-	-	-	-	-	-	-
1	MS Condensate Lkoff			OWN	-	-	-	-	-	-	-	-	-	-	-	-
				PRE	-	-	-	-	-	-	-	-	-	-	-	-
B-J	101538		ISI-786A	ISI	-	-	-	-	-	-	-	-	-	-	-	-
B9.40	W-16		Pipe-to-Elbow	AUG	-	-	-	-	-	-	-	-	-	-	-	-
1	MS Condensate Lkoff			OWN	-	-	-	-	-	-	-	-	-	-	-	-
				PRE	-	-	-	-	-	-	-	-	-	-	-	-
B-J	101539		ISI-786A	ISI	-	-	-	-	-	-	-	-	-	-	-	-
B9.40	W-17		Elbow-to-Pipe	AUG	-	-	-	-	-	-	-	-	-	-	-	-
1	MS Condensate Lkoff			OWN	-	-	-	-	-	-	-	-	-	-	-	-
				PRE	-	-	-	-	-	-	-	-	-	-	-	-
B-J	101540		ISI-786A	ISI	-	-	-	-	-	-	-	-	-	-	-	-
B9.40	W-18		Pipe-to-Elbow	AUG	-	-	-	-	-	-	-	-	-	-	-	-
1	MS Condensate Lkoff			OWN	-	-	-	-	-	-	-	-	-	-	-	-
				PRE	-	-	-	-	-	-	-	-	-	-	-	-
B-J	101541		ISI-786A	ISI	-	-	-	-	-	-	-	-	-	-	-	-
B9.40	W-19		Elbow-to-Pipe	AUG	-	-	-	-	-	-	-	-	-	-	-	-
1	MS Condensate Lkoff			OWN	-	-	-	-	-	-	-	-	-	-	-	-
				PRE	-	-	-	-	-	-	-	-	-	-	-	-
B-J	101542		ISI-786A	ISI	-	-	-	-	-	-	-	-	-	-	-	-
B9.40	W-20		Pipe-to-Tee	AUG	-	-	-	-	-	-	-	-	-	-	-	-
1	MS Condensate Lkoff			OWN	-	-	-	-	-	-	-	-	-	-	-	-
				PRE	-	-	-	-	-	-	-	-	-	-	-	-
B-J	101543		ISI-786A	ISI	-	-	-	-	-	-	-	-	-	-	-	-
B9.40	W-21		Reducer-to-Tee	AUG	-	-	-	-	-	-	-	-	-	-	-	-
1	MS Condensate Lkoff			OWN	-	-	-	-	-	-	-	-	-	-	-	-
				PRE	-	-	-	-	-	-	-	-	-	-	-	-
B-J	101544		ISI-786A	ISI	-	-	-	-	-	-	-	-	-	-	-	-
B9.40	W-22		Tee-to-Pipe	AUG	-	-	-	-	-	-	-	-	-	-	-	-
1	MS Condensate Lkoff			OWN	-	-	-	-	-	-	-	-	-	-	-	-
				PRE	-	-	-	-	-	-	-	-	-	-	-	-
B-J	101545		ISI-786A	ISI	-	-	-	-	-	-	-	-	-	-	-	-
B9.40	W-23		Pipe-to-Elbow	AUG	-	-	-	-	-	-	-	-	-	-	-	-
1	MS Condensate Lkoff			OWN	-	-	-	-	-	-	-	-	-	-	-	-
				PRE	-	-	-	-	-	-	-	-	-	-	-	-
B-J	101546		ISI-786A	ISI	-	-	-	-	-	-	-	-	-	-	-	-
B9.40	W-24		Elbow-to-Pipe	AUG	-	-	-	-	-	-	-	-	-	-	-	-
1	MS Condensate Lkoff			OWN	-	-	-	-	-	-	-	-	-	-	-	-
				PRE	-	-	-	-	-	-	-	-	-	-	-	-

MONTICELLO Nuclear Generating Plant
3rd Interval ISI Plan Rev. 3 June 1, 1992 to May 31, 2002

Category, ItemNO, Class	Summary / CompID / System	Scope / Method / Procedure	Iso No. Comp. Desc. Code Case /Note		Period 1				Period 2				Period 3			
					1	2	3	4	1	2	3	4	1	2	3	4
B-J	101547		ISI-786A	ISI	-	-	-	-	-	-	-	-	-	-	-	-
B9.40	W-25		Pipe-to-Elbow	AUG	-	-	-	-	-	-	-	-	-	-	-	-
1	MS Condensate Lkoff			OWN	-	-	-	-	-	-	-	-	-	-	-	-
				PRE	-	-	-	-	-	-	-	-	-	-	-	-
B-J	101548		ISI-786A	ISI	-	-	-	-	-	-	-	-	-	-	-	-
B9.40	W-26		Elbow-to-Pipe	AUG	-	-	-	-	-	-	-	-	-	-	-	-
1	MS Condensate Lkoff			OWN	-	-	-	-	-	-	-	-	-	-	-	-
				PRE	-	-	-	-	-	-	-	-	-	-	-	-
B-J	101549		ISI-786A	ISI	-	-	-	-	-	-	-	-	-	-	-	-
B9.40	W-27		Pipe-to-Elbow	AUG	-	-	-	-	-	-	-	-	-	-	-	-
1	MS Condensate Lkoff			OWN	-	-	-	-	-	-	-	-	-	-	-	-
				PRE	-	-	-	-	-	-	-	-	-	-	-	-
B-J	101550	ISI/MT/ISI-MT-1	ISI-786A	ISI	c	-	-	-	-	-	-	-	-	-	-	-
B9.40	W-28		Elbow-to-Pipe	AUG	-	-	-	-	-	-	-	-	-	-	-	-
1	MS Condensate Lkoff			OWN	-	-	-	-	-	-	-	-	-	-	-	-
				PRE	-	-	-	-	-	-	-	-	-	-	-	-
B-J	101551	ISI/MT/ISI-MT-1	ISI-786A	ISI	c	-	-	-	-	-	-	-	-	-	-	-
B9.40	W-29		Pipe-to-Elbow	AUG	-	-	-	-	-	-	-	-	-	-	-	-
1	MS Condensate Lkoff			OWN	-	-	-	-	-	-	-	-	-	-	-	-
				PRE	-	-	-	-	-	-	-	-	-	-	-	-
B-J	101552	ISI/MT/ISI-MT-1	ISI-786A	ISI	c	-	-	-	-	-	-	-	-	-	-	-
B9.40	W-30		Elbow-to-Pipe	AUG	-	-	-	-	-	-	-	-	-	-	-	-
1	MS Condensate Lkoff			OWN	-	-	-	-	-	-	-	-	-	-	-	-
				PRE	-	-	-	-	-	-	-	-	-	-	-	-
B-J	101553	ISI/MT/ISI-MT-1	ISI-786A	ISI	c	-	-	-	-	-	-	-	-	-	-	-
B9.40	W-31		Pipe-to-Elbow	AUG	-	-	-	-	-	-	-	-	-	-	-	-
1	MS Condensate Lkoff			OWN	-	-	-	-	-	-	-	-	-	-	-	-
				PRE	-	-	-	-	-	-	-	-	-	-	-	-
B-J	101554	ISI/MT/ISI-MT-1	ISI-786A	ISI	c	-	-	-	-	-	-	-	-	-	-	-
B9.40	W-32		Elbow-to-Pipe	AUG	-	-	-	-	-	-	-	-	-	-	-	-
1	MS Condensate Lkoff			OWN	-	-	-	-	-	-	-	-	-	-	-	-
				PRE	-	-	-	-	-	-	-	-	-	-	-	-
B-J	101555		ISI-786A	ISI	-	-	-	-	-	-	-	-	-	-	-	-
B9.40	W-33		Pipe-to-Coupling	AUG	-	-	-	-	-	-	-	-	-	-	-	-
1	MS Condensate Lkoff			OWN	-	-	-	-	-	-	-	-	-	-	-	-
				PRE	-	-	-	-	-	-	-	-	-	-	-	-
B-J	101556		ISI-786A	ISI	-	-	-	-	-	-	-	-	-	-	-	-
B9.40	W-34		Coupling-to-Pipe	AUG	-	-	-	-	-	-	-	-	-	-	-	-
1	MS Condensate Lkoff			OWN	-	-	-	-	-	-	-	-	-	-	-	-
				PRE	-	-	-	-	-	-	-	-	-	-	-	-

MONTICELLO Nuclear Generating Plant
3rd Interval ISI Plan Rev. 3 June 1, 1992 to May 31, 2002

Category, ItemNO, Class	Summary / CompID / System	Scope / Method / Procedure	Iso No. Comp. Desc. Code Case /Note		Period 1				Period 2				Period 3			
					1	2	3	4	1	2	3	4	1	2	3	4
B-J	101557		ISI-786A	ISI	-	-	-	-	-	-	-	-	-	-	-	-
B9.40	W-35		Pipe-to-Coupling	AUG	-	-	-	-	-	-	-	-	-	-	-	-
1	MS Condensate Lkoff			OWN	-	-	-	-	-	-	-	-	-	-	-	-
				PRE	-	-	-	-	-	-	-	-	-	-	-	-
B-J	101558		ISI-786A	ISI	-	-	-	-	-	-	-	-	-	-	-	-
B9.40	W-36		Coupling-to-Pipe	AUG	-	-	-	-	-	-	-	-	-	-	-	-
1	MS Condensate Lkoff			OWN	-	-	-	-	-	-	-	-	-	-	-	-
				PRE	-	-	-	-	-	-	-	-	-	-	-	-
B-J	101559		ISI-786A	ISI	-	-	-	-	-	-	-	-	-	-	-	-
B9.40	W-37		Pipe-to-Boss	AUG	-	-	-	-	-	-	-	-	-	-	-	-
1	MS Condensate Lkoff			OWN	-	-	-	-	-	-	-	-	-	-	-	-
				PRE	-	-	-	-	-	-	-	-	-	-	-	-
B-J	101560	ISI/MT/ISI-MT-1	ISI-786A	ISI	-	-	-	-	-	-	-	-	S	-	-	-
B9.40	W-38		Valve-to-Pipe	AUG	-	-	-	-	-	-	-	-	-	-	-	-
1	MS Condensate Lkoff			OWN	-	-	-	-	-	-	-	-	-	-	-	-
				PRE	-	-	-	-	-	-	-	-	-	-	-	-
B-J	101561		ISI-786A	ISI	-	-	-	-	-	-	-	-	-	-	-	-
B9.40	W-39		Pipe-to-Elbow	AUG	-	-	-	-	-	-	-	-	-	-	-	-
1	MS Condensate Lkoff			OWN	-	-	-	-	-	-	-	-	-	-	-	-
				PRE	-	-	-	-	-	-	-	-	-	-	-	-
B-J	101562	ISI/MT/ISI-MT-1	ISI-786A	ISI	-	-	-	-	-	-	-	-	S	-	-	-
B9.40	W-40		Elbow-to-Pipe	AUG	-	-	-	-	-	-	-	-	-	-	-	-
1	MS Condensate Lkoff			OWN	-	-	-	-	-	-	-	-	-	-	-	-
				PRE	-	-	-	-	-	-	-	-	-	-	-	-
B-J	101563		ISI-786A	ISI	-	-	-	-	-	-	-	-	-	-	-	-
B9.40	W-41		Pipe-to-Elbow	AUG	-	-	-	-	-	-	-	-	-	-	-	-
1	MS Condensate Lkoff			OWN	-	-	-	-	-	-	-	-	-	-	-	-
				PRE	-	-	-	-	-	-	-	-	-	-	-	-
B-J	101564		ISI-786A	ISI	-	-	-	-	-	-	-	-	-	-	-	-
B9.40	W-42		Elbow-to-Pipe	AUG	-	-	-	-	-	-	-	-	-	-	-	-
1	MS Condensate Lkoff			OWN	-	-	-	-	-	-	-	-	-	-	-	-
				PRE	-	-	-	-	-	-	-	-	-	-	-	-
B-J	101565		ISI-786A	ISI	-	-	-	-	-	-	-	-	-	-	-	-
B9.40	W-43		Pipe-to-Elbow	AUG	-	-	-	-	-	-	-	-	-	-	-	-
1	MS Condensate Lkoff			OWN	-	-	-	-	-	-	-	-	-	-	-	-
				PRE	-	-	-	-	-	-	-	-	-	-	-	-
B-J	101566	ISI/MT/ISI-MT-1	ISI-786A	ISI	-	-	-	-	-	-	-	-	S	-	-	-
B9.40	W-44		Elbow-to-Pipe	AUG	-	-	-	-	-	-	-	-	-	-	-	-
1	MS Condensate Lkoff			OWN	-	-	-	-	-	-	-	-	-	-	-	-
				PRE	-	-	-	-	-	-	-	-	-	-	-	-

MONTICELLO Nuclear Generating Plant
3rd Interval ISI Plan Rev. 3 June 1, 1992 to May 31, 2002

Category, ItemNO, Class	Summary / CompID / System	Scope / Method / Procedure	Iso No. Comp. Desc. Code Case /Note		Period 1				Period 2				Period 3			
					1	2	3	4	1	2	3	4	1	2	3	4
B-J	101567	ISI/MT/ISI-MT-1	ISI-786A	ISI	-	-	-	-	-	-	-	-	s	-	-	-
B9.40	W-45		Pipe-to-Boss	AUG	-	-	-	-	-	-	-	-	-	-	-	-
1	MS Condensate Lkoff			OWN	-	-	-	-	-	-	-	-	-	-	-	-
				PRE	-	-	-	-	-	-	-	-	-	-	-	-
B-J	101568		ISI-786A	ISI	-	-	-	-	-	-	-	-	-	-	-	-
B9.40	W-46		Valve-to-Pipe	AUG	-	-	-	-	-	-	-	-	-	-	-	-
1	MS Condensate Lkoff			OWN	-	-	-	-	-	-	-	-	-	-	-	-
				PRE	-	-	-	-	-	-	-	-	-	-	-	-
B-J	101569		ISI-786A	ISI	-	-	-	-	-	-	-	-	-	-	-	-
B9.40	W-47		Pipe-to-Elbow	AUG	-	-	-	-	-	-	-	-	-	-	-	-
1	MS Condensate Lkoff			OWN	-	-	-	-	-	-	-	-	-	-	-	-
				PRE	-	-	-	-	-	-	-	-	-	-	-	-
B-J	101570		ISI-786A	ISI	-	-	-	-	-	-	-	-	-	-	-	-
B9.40	W-48		Elbow-to-Pipe	AUG	-	-	-	-	-	-	-	-	-	-	-	-
1	MS Condensate Lkoff			OWN	-	-	-	-	-	-	-	-	-	-	-	-
				PRE	-	-	-	-	-	-	-	-	-	-	-	-
B-J	101571		ISI-786A	ISI	-	-	-	-	-	-	-	-	-	-	-	-
B9.40	W-49		Pipe-to-Elbow	AUG	-	-	-	-	-	-	-	-	-	-	-	-
1	MS Condensate Lkoff			OWN	-	-	-	-	-	-	-	-	-	-	-	-
				PRE	-	-	-	-	-	-	-	-	-	-	-	-
B-J	101572	ISI/MT/ISI-MT-1	ISI-786A	ISI	-	-	-	-	-	c	-	-	-	-	-	-
B9.32	W- 5		Weldolet-to-Pipe	AUG	-	-	-	-	-	-	-	-	-	-	-	-
1	MS Condensate Lkoff			OWN	-	-	-	-	-	-	-	-	-	-	-	-
				PRE	-	-	-	-	-	-	-	-	-	-	-	-
B-J	101573		ISI-786A	ISI	-	-	-	-	-	-	-	-	-	-	-	-
B9.40	W-50		Elbow-to-Pipe	AUG	-	-	-	-	-	-	-	-	-	-	-	-
1	MS Condensate Lkoff			OWN	-	-	-	-	-	-	-	-	-	-	-	-
				PRE	-	-	-	-	-	-	-	-	-	-	-	-
B-J	101574		ISI-786A	ISI	-	-	-	-	-	-	-	-	-	-	-	-
B9.40	W-51		Pipe-to-Elbow	AUG	-	-	-	-	-	-	-	-	-	-	-	-
1	MS Condensate Lkoff			OWN	-	-	-	-	-	-	-	-	-	-	-	-
				PRE	-	-	-	-	-	-	-	-	-	-	-	-
B-J	101575		ISI-786A	ISI	-	-	-	-	-	-	-	-	-	-	-	-
B9.40	W-52		Elbow-to-Pipe	AUG	-	-	-	-	-	-	-	-	-	-	-	-
1	MS Condensate Lkoff			OWN	-	-	-	-	-	-	-	-	-	-	-	-
				PRE	-	-	-	-	-	-	-	-	-	-	-	-
B-J	101576		ISI-786A	ISI	-	-	-	-	-	-	-	-	-	-	-	-
B9.40	W-53		Pipe-to-Boss	AUG	-	-	-	-	-	-	-	-	-	-	-	-
1	MS Condensate Lkoff			OWN	-	-	-	-	-	-	-	-	-	-	-	-
				PRE	-	-	-	-	-	-	-	-	-	-	-	-

MONTICELLO Nuclear Generating Plant
3rd Interval ISI Plan Rev. 3 June 1, 1992 to May 31, 2002

Category, ItemNO, Class	Summary / CompID / System	Scope / Method / Procedure	Iso No. Comp. Desc. Code Case /Note		Period 1				Period 2				Period 3			
					1	2	3	4	1	2	3	4	1	2	3	4
B-J	101577		ISI-786A	ISI	-	-	-	-	-	-	-	-	-	-	-	-
B9.40	W-54		Valve-to-Pipe	AUG	-	-	-	-	-	-	-	-	-	-	-	-
1	MS Condensate Lkoff			OWN	-	-	-	-	-	-	-	-	-	-	-	-
				PRE	-	-	-	-	-	-	-	-	-	-	-	-
B-J	101578		ISI-786A	ISI	-	-	-	-	-	-	-	-	-	-	-	-
B9.40	W-55		Pipe-to-Coupling	AUG	-	-	-	-	-	-	-	-	-	-	-	-
1	MS Condensate Lkoff			OWN	-	-	-	-	-	-	-	-	-	-	-	-
				PRE	-	-	-	-	-	-	-	-	-	-	-	-
B-J	101579		ISI-786A	ISI	-	-	-	-	-	-	-	-	-	-	-	-
B9.40	W-56		Coupling-to-Pipe	AUG	-	-	-	-	-	-	-	-	-	-	-	-
1	MS Condensate Lkoff			OWN	-	-	-	-	-	-	-	-	-	-	-	-
				PRE	-	-	-	-	-	-	-	-	-	-	-	-
B-J	101580		ISI-786A	ISI	-	-	-	-	-	-	-	-	-	-	-	-
B9.40	W-57		Pipe-to-Elbow	AUG	-	-	-	-	-	-	-	-	-	-	-	-
1	MS Condensate Lkoff			OWN	-	-	-	-	-	-	-	-	-	-	-	-
				PRE	-	-	-	-	-	-	-	-	-	-	-	-
B-J	101581		ISI-786A	ISI	-	-	-	-	-	-	-	-	-	-	-	-
B9.40	W-58		Elbow-to-Pipe	AUG	-	-	-	-	-	-	-	-	-	-	-	-
1	MS Condensate Lkoff			OWN	-	-	-	-	-	-	-	-	-	-	-	-
				PRE	-	-	-	-	-	-	-	-	-	-	-	-
B-J	101582		ISI-786A	ISI	-	-	-	-	-	-	-	-	-	-	-	-
B9.40	W-59		Pipe-to-Tee	AUG	-	-	-	-	-	-	-	-	-	-	-	-
1	MS Condensate Lkoff			OWN	-	-	-	-	-	-	-	-	-	-	-	-
				PRE	-	-	-	-	-	-	-	-	-	-	-	-
B-J	101583		ISI-786A	ISI	-	-	-	-	-	-	-	-	-	-	-	-
B9.40	W-60		Reducer-to-Tee	AUG	-	-	-	-	-	-	-	-	-	-	-	-
1	MS Condensate Lkoff			OWN	-	-	-	-	-	-	-	-	-	-	-	-
				PRE	-	-	-	-	-	-	-	-	-	-	-	-
B-J	101584		ISI-786A	ISI	-	-	-	-	-	-	-	-	-	-	-	-
B9.40	W-61		Tee-to-Pipe	AUG	-	-	-	-	-	-	-	-	-	-	-	-
1	MS Condensate Lkoff			OWN	-	-	-	-	-	-	-	-	-	-	-	-
				PRE	-	-	-	-	-	-	-	-	-	-	-	-
B-J	101585		ISI-786A	ISI	-	-	-	-	-	-	-	-	-	-	-	-
B9.40	W-62		Pipe-to-Elbow	AUG	-	-	-	-	-	-	-	-	-	-	-	-
1	MS Condensate Lkoff			OWN	-	-	-	-	-	-	-	-	-	-	-	-
				PRE	-	-	-	-	-	-	-	-	-	-	-	-
B-J	101586	ISI/MT/ISI-MT-1	ISI-786A	ISI	-	-	-	-	-	c	-	-	-	-	-	-
B9.40	W-63		Elbow-to-Pipe	AUG	-	-	-	-	-	-	-	-	-	-	-	-
1	MS Condensate Lkoff			OWN	-	-	-	-	-	-	-	-	-	-	-	-
				PRE	-	-	-	-	-	-	-	-	-	-	-	-

MONTICELLO Nuclear Generating Plant
3rd Interval ISI Plan Rev. 3 June 1, 1992 to May 31, 2002

Category, ItemNO, Class	Summary / CompID / System	Scope / Method / Procedure	Iso No. Comp. Desc. Code Case /Note		Period 1				Period 2				Period 3			
					1	2	3	4	1	2	3	4	1	2	3	4
B-J	101587	ISI/MT/ISI-MT-1	ISI-786A	ISI	-	-	-	-	-	c	-	-	-	-	-	-
B9.40	W-64		Pipe-to-Elbow	AUG	-	-	-	-	-	-	-	-	-	-	-	-
1	MS Condensate Lkoff			OWN	-	-	-	-	-	-	-	-	-	-	-	-
				PRE	-	-	-	-	-	-	-	-	-	-	-	-
B-J	101588	ISI/MT/ISI-MT-1	ISI-786A	ISI	-	-	-	-	-	c	-	-	-	-	-	-
B9.40	W-65		Elbow-to-Pipe	AUG	-	-	-	-	-	-	-	-	-	-	-	-
1	MS Condensate Lkoff			OWN	-	-	-	-	-	-	-	-	-	-	-	-
				PRE	-	-	-	-	-	-	-	-	-	-	-	-
B-J	101589	ISI/MT/ISI-MT-1	ISI-786A	ISI	-	-	-	-	-	c	-	-	-	-	-	-
B9.40	W-66		Pipe-to-Elbow	AUG	-	-	-	-	-	-	-	-	-	-	-	-
1	MS Condensate Lkoff			OWN	-	-	-	-	-	-	-	-	-	-	-	-
				PRE	-	-	-	-	-	-	-	-	-	-	-	-
B-J	101590	ISI/MT/ISI-MT-1	ISI-786A	ISI	-	-	-	-	-	c	-	-	-	-	-	-
B9.40	W-67		Elbow-to-Pipe	AUG	-	-	-	-	-	-	-	-	-	-	-	-
1	MS Condensate Lkoff			OWN	-	-	-	-	-	-	-	-	-	-	-	-
				PRE	-	-	-	-	-	-	-	-	-	-	-	-
B-J	101591		ISI-786A	ISI	-	-	-	-	-	-	-	-	-	-	-	-
B9.40	W-68		Pipe-to-Coupling	AUG	-	-	-	-	-	-	-	-	-	-	-	-
1	MS Condensate Lkoff			OWN	-	-	-	-	-	-	-	-	-	-	-	-
				PRE	-	-	-	-	-	-	-	-	-	-	-	-
B-J	101592		ISI-786A	ISI	-	-	-	-	-	-	-	-	-	-	-	-
B9.40	W-69		Coupling-to-Pipe	AUG	-	-	-	-	-	-	-	-	-	-	-	-
1	MS Condensate Lkoff			OWN	-	-	-	-	-	-	-	-	-	-	-	-
				PRE	-	-	-	-	-	-	-	-	-	-	-	-
B-J	101593		ISI-786A	ISI	-	-	-	-	-	-	-	-	-	-	-	-
B9.40	W-70		Pipe-to-Boss	AUG	-	-	-	-	-	-	-	-	-	-	-	-
1	MS Condensate Lkoff			OWN	-	-	-	-	-	-	-	-	-	-	-	-
				PRE	-	-	-	-	-	-	-	-	-	-	-	-
C-B	101594	ISI/MT/ISI-MT-1	ISI-7905-32A	ISI	-	-	-	-	-	-	-	-	s	-	-	-
C2.31	N- 1		Shell-Pad-Noz	AUG	-	-	-	-	-	-	-	-	-	-	-	-
2	RHR Heat Exchanger A			OWN	-	-	-	-	-	-	-	-	-	-	-	-
				PRE	-	-	-	-	-	-	-	-	-	-	-	-
C-B	101595	ISI/MT/ISI-MT-1	ISI-7905-32A	ISI	c	-	-	-	-	-	-	-	-	-	-	-
C2.31	N- 2		Shell-Pad-Noz	AUG	-	-	-	-	-	-	-	-	-	-	-	-
2	RHR Heat Exchanger A			OWN	-	-	-	-	-	-	-	-	-	-	-	-
				PRE	-	-	-	-	-	-	-	-	-	-	-	-
C-C	101596	ISI/MT/ISI-MT-1	ISI-7905-32A	ISI	c	-	-	-	-	B	-	-	-	-	-	-
C3.10	Support A	ISI/VT/ISI-VT-2.0	Support A,E200A, 0°	AUG	-	-	-	-	-	-	-	-	-	-	-	-
2	RHR Heat Exchanger A			OWN	-	-	-	-	-	-	-	-	-	-	-	-
				PRE	-	-	-	-	-	-	-	-	-	-	-	-

MONTICELLO Nuclear Generating Plant
3rd Interval ISI Plan Rev. 3 June 1, 1992 to May 31, 2002

Category, ItemNO, Class	Summary / CompID / System	Scope / Method / Procedure	Iso No. Comp. Desc. Code Case /Note		Period 1				Period 2				Period 3			
					1	2	3	4	1	2	3	4	1	2	3	4
C-C	101597	ISI/MT/ISI-MT-1	ISI-7905-32A	ISI	c	-	-	-	-	B	-	-	-	-	-	-
C3.10	Support B	ISI/VT/ISI-VT-2.0	Support B,E200A 180°	AUG	-	-	-	-	-	-	-	-	-	-	-	-
2	RHR Heat Exchanger A			OWN	-	-	-	-	-	-	-	-	-	-	-	-
				PRE	-	-	-	-	-	-	-	-	-	-	-	-
C-C	101598	ISI/MT/ISI-MT-1	ISI-7905-32A	ISI	-	-	-	-	-	c	-	-	-	-	-	-
C3.10	Support C	ISI/VT/ISI-VT-2.0	Support C,E200A 315°	AUG	-	-	-	-	-	-	-	-	-	-	-	-
2	RHR Heat Exchanger A			OWN	-	-	-	-	-	-	-	-	-	-	-	-
				PRE	-	-	-	-	-	-	-	-	-	-	-	-
C-A	101600	ISI/UT/ISI-UT-1	ISI-7905-32A	ISI	c	-	-	-	-	-	-	-	-	-	-	-
C1.10	W- 1		Top Flange to Shell	AUG	-	-	-	-	-	-	-	-	-	-	-	-
2	RHR Heat Exchanger A			OWN	-	-	-	-	-	-	-	-	-	-	-	-
				PRE	-	-	-	-	-	-	-	-	-	-	-	-
C-A	101601		ISI-7905-32A	ISI	-	-	-	-	-	-	-	-	-	-	-	-
C1.10	W- 2		Lower Flange/Shell	AUG	-	-	-	-	-	-	-	-	-	-	-	-
2	RHR Heat Exchanger A			OWN	-	-	-	-	-	-	-	-	-	-	-	-
				PRE	-	-	-	-	-	-	-	-	-	-	-	-
C-A	101602	ISI/UT/ISI-UT-1	ISI-7905-32A	ISI	-	-	-	-	-	c	-	-	-	-	-	-
C1.20	W- 3		Lower Head/Flange	AUG	-	-	-	-	-	-	-	-	-	-	-	-
2	RHR Heat Exchanger A			OWN	-	-	-	-	-	-	-	-	-	-	-	-
				PRE	-	-	-	-	-	-	-	-	-	-	-	-
C-A	101603		ISI-7905-32A	ISI	-	-	-	-	-	-	-	-	-	-	-	-
C1.20	W- 4		Lower Head Circ Weld	AUG	-	-	-	-	-	-	-	-	-	-	-	-
2	RHR Heat Exchanger A			OWN	-	-	-	-	-	-	-	-	-	-	-	-
				PRE	-	-	-	-	-	-	-	-	-	-	-	-
C-B	101604	ISI/MT/ISI-MT-1	ISI-7905-32B	ISI	-	-	-	-	-	-	-	-	s	-	-	-
C2.31	N -1		Shell-Pad-Noz	AUG	-	-	-	-	-	-	-	-	-	-	-	-
2	RHR Heat Exchanger B			OWN	-	-	-	-	-	-	-	-	-	-	-	-
				PRE	-	-	-	-	-	-	-	-	-	-	-	-
C-B	101605	ISI/MT/ISI-MT-1	ISI-7905-32B	ISI	-	-	-	-	-	-	-	-	s	-	-	-
C2.31	N- 2		Shell-Pad-Noz	AUG	-	-	-	-	-	-	-	-	-	-	-	-
2	RHR Heat Exchanger B			OWN	-	-	-	-	-	-	-	-	-	-	-	-
				PRE	-	-	-	-	-	-	-	-	-	-	-	-
C-C	101606	ISI/VT/ISI-VT-2.0	ISI-7905-32B	ISI	-	-	-	-	-	c	-	-	b	-	-	-
C3.10	Support A	ISI/MT/ISI-MT-1	Support A,E200B 0°	AUG	-	-	-	-	-	-	-	-	-	-	-	-
2	RHR Heat Exchanger B			OWN	-	-	-	-	-	-	-	-	-	-	-	-
				PRE	-	-	-	-	-	-	-	-	-	-	-	-
C-C	101607	ISI/MT/ISI-MT-1	ISI-7905-32B	ISI	-	-	-	-	-	c	-	-	b	-	-	-
C3.10	Support B	ISI/VT/ISI-VT-2.0	Support B,E200B 180°	AUG	-	-	-	-	-	-	-	-	-	-	-	-
2	RHR Heat Exchanger B			OWN	-	-	-	-	-	-	-	-	-	-	-	-
				PRE	-	-	-	-	-	-	-	-	-	-	-	-

MONTICELLO Nuclear Generating Plant
3rd Interval ISI Plan Rev. 3 June 1, 1992 to May 31, 2002

Category, ItemNO, Class	Summary / CompID / System	Scope / Method / Procedure	Iso No. Comp. Desc. Code Case /Note		Period 1				Period 2				Period 3			
					1	2	3	4	1	2	3	4	1	2	3	4
C-C	101609	ISI/VT/ISI-VT-2.0	ISI-7905-32B	ISI	-	-	-	-	-	c	-	-	b	-	-	-
C3.10	Support C	ISI/PT/ISI-PT-1	Support C,E200B 315°	AUG	-	-	-	-	-	-	-	-	-	-	-	-
2	RHR Heat Exchanger B	ISI/MT/ISI-MT-1		OWN	-	-	-	-	-	-	-	-	-	-	-	-
				PRE	-	-	-	-	-	-	-	-	-	-	-	-
C-A	101611		ISI-7905-32B	ISI	-	-	-	-	-	-	-	-	-	-	-	-
C1.10	W- 1		Top Flange to Shell	AUG	-	-	-	-	-	-	-	-	-	-	-	-
2	RHR Heat Exchanger B			OWN	-	-	-	-	-	-	-	-	-	-	-	-
				PRE	-	-	-	-	-	-	-	-	-	-	-	-
C-A	101612	ISI/UT/ISI-UT-1	ISI-7905-32B	ISI	-	-	-	-	-	-	-	-	s	-	-	-
C1.10	W- 2		Lower Flange/Shell	AUG	-	-	-	-	-	-	-	-	-	-	-	-
2	RHR Heat Exchanger B			OWN	-	-	-	-	-	-	-	-	-	-	-	-
				PRE	-	-	-	-	-	-	-	-	-	-	-	-
C-A	101613		ISI-7905-32B	ISI	-	-	-	-	-	-	-	-	-	-	-	-
C1.20	W- 3		Lower Head/Flange	AUG	-	-	-	-	-	-	-	-	-	-	-	-
2	RHR Heat Exchanger B			OWN	-	-	-	-	-	-	-	-	-	-	-	-
				PRE	-	-	-	-	-	-	-	-	-	-	-	-
C-A	101614	ISI/UT/ISI-UT-1	ISI-7905-32B	ISI	-	-	-	-	-	-	-	-	s	-	-	-
C1.20	W- 4		Lower Head Circ Weld	AUG	-	-	-	-	-	-	-	-	-	-	-	-
2	RHR Heat Exchanger B			OWN	-	-	-	-	-	-	-	-	-	-	-	-
				PRE	-	-	-	-	-	-	-	-	-	-	-	-
B-J	101615		ISI-821A	ISI	-	-	-	-	-	-	-	-	-	-	-	-
B9.40	W-50		Couping-to-Pipe	AUG	-	-	-	-	-	-	-	-	-	-	-	-
1	Bottom Head Drain			OWN	-	-	-	-	-	-	-	-	-	-	-	-
				PRE	-	-	-	-	-	-	-	-	-	-	-	-
B-G-2	101616	ISI/VT/ISI-VT-1.0	ISI-821A	ISI	-	-	-	-	-	-	-	-	s	-	-	-
B7.50	B- 1		Flange Bolts	AUG	-	-	-	-	-	-	-	-	-	-	-	-
1	Bottom Head Drain			OWN	-	-	-	-	-	-	-	-	-	-	-	-
				PRE	-	-	-	-	-	-	-	-	-	-	-	-
F-C	101617	ISI/VT/ISI-VT-2.0	ISI-821A	ISI	-	c	-	-	-	-	-	-	-	-	-	-
F-A,B,C	H- 1		Clamp	AUG	-	-	-	-	-	-	-	-	-	-	-	-
1	Bottom Head Drain			OWN	-	-	-	-	-	-	-	-	-	-	-	-
				PRE	-	-	-	-	-	-	-	-	-	-	-	-
F-B	101618	ISI/VT/ISI-VT-2.0	ISI-821A	ISI	-	-	-	-	-	-	-	-	s	-	-	-
F-A,B,C	H- 2		Box Restraint	AUG	-	-	-	-	-	-	-	-	-	-	-	-
1	Bottom Head Drain			OWN	-	-	-	-	-	-	-	-	-	-	-	-
				PRE	-	-	-	-	-	-	-	-	-	-	-	-
F-C	101619	ISI/VT/ISI-VT-2.0	ISI-821A	ISI	-	-	-	-	-	-	-	-	s	-	-	-
F-A,B,C	H- 3		Clamp	AUG	-	-	-	-	-	-	-	-	-	-	-	-
1	Bottom Head Drain			OWN	-	-	-	-	-	-	-	-	-	-	-	-
				PRE	-	-	-	-	-	-	-	-	-	-	-	-

MONTICELLO Nuclear Generating Plant
3rd Interval ISI Plan Rev. 3 June 1, 1992 to May 31, 2002

Category, ItemNO, Class	Summary / CompID / System	Scope / Method / Procedure	Iso No. Comp. Desc. Code Case /Note		Period 1				Period 2				Period 3			
					1	2	3	4	1	2	3	4	1	2	3	4
F-B	101620	ISI/VT/ISI-VT-2.0	ISI-821A	ISI	c	-	-	-	-	-	-	-	-	-	-	-
F-A,B,C	H- 4		Box Restraint	AUG	-	-	-	-	-	-	-	-	-	-	-	-
1	Bottom Head Drain			OWN	-	-	-	-	-	-	-	-	-	-	-	-
				PRE	-	-	-	-	-	-	-	-	-	-	-	-
F-B	101621	ISI/VT/ISI-VT-2.0	ISI-821A	ISI	-	-	-	-	-	-	-	-	s	-	-	-
F-A,B,C	H- 5		Box Restraint	AUG	-	-	-	-	-	-	-	-	-	-	-	-
1	Bottom Head Drain			OWN	-	-	-	-	-	-	-	-	-	-	-	-
				PRE	-	-	-	-	-	-	-	-	-	-	-	-
F-B	101622	ISI/VT/ISI-VT-2.0	ISI-821A	ISI	-	-	-	-	-	-	-	-	s	-	-	-
F-A,B,C	H- 6		Box Restraint	AUG	-	-	-	-	-	-	-	-	-	-	-	-
1	Bottom Head Drain			OWN	-	-	-	-	-	-	-	-	-	-	-	-
				PRE	-	-	-	-	-	-	-	-	-	-	-	-
F-C	101623	ISI/VT/ISI-VT-2.0	ISI-821A	ISI	-	-	-	-	-	-	-	-	s	-	-	-
F-A,B,C	H- 7		Clamp	AUG	-	-	-	-	-	-	-	-	-	-	-	-
1	Bottom Head Drain			OWN	-	-	-	-	-	-	-	-	-	-	-	-
				PRE	-	-	-	-	-	-	-	-	-	-	-	-
B-J	101624		ISI-821A	ISI	-	-	-	-	-	-	-	-	-	-	-	-
B9.40	W- 1		Nozzle Stud-to-Pipe	AUG	-	-	-	-	-	-	-	-	-	-	-	-
1	Bottom Head Drain			OWN	-	-	-	-	-	-	-	-	-	-	-	-
				PRE	-	-	-	-	-	-	-	-	-	-	-	-
B-J	101625		ISI-821A	ISI	-	-	-	-	-	-	-	-	-	-	-	-
B9.40	W- 2		Pipe-to-Elbow	AUG	-	-	-	-	-	-	-	-	-	-	-	-
1	Bottom Head Drain			OWN	-	-	-	-	-	-	-	-	-	-	-	-
				PRE	-	-	-	-	-	-	-	-	-	-	-	-
B-J	101626		ISI-821A	ISI	-	-	-	-	-	-	-	-	-	-	-	-
B9.40	W- 3		Elbow-to-Pipe	AUG	-	-	-	-	-	-	-	-	-	-	-	-
1	Bottom Head Drain			OWN	-	-	-	-	-	-	-	-	-	-	-	-
				PRE	-	-	-	-	-	-	-	-	-	-	-	-
B-J	101627		ISI-821A	ISI	-	-	-	-	-	-	-	-	-	-	-	-
B9.40	W- 4		Pipe-to-Elbow	AUG	-	-	-	-	-	-	-	-	-	-	-	-
1	Bottom Head Drain			OWN	-	-	-	-	-	-	-	-	-	-	-	-
				PRE	-	-	-	-	-	-	-	-	-	-	-	-
B-J	101628		ISI-821A	ISI	-	-	-	-	-	-	-	-	-	-	-	-
B9.40	W- 5		Elbow-to-Pipe	AUG	-	-	-	-	-	-	-	-	-	-	-	-
1	Bottom Head Drain			OWN	-	-	-	-	-	-	-	-	-	-	-	-
				PRE	-	-	-	-	-	-	-	-	-	-	-	-
B-J	101629		ISI-821A	ISI	-	-	-	-	-	-	-	-	-	-	-	-
B9.40	W- 6		Pipe-to-Elbow	AUG	-	-	-	-	-	-	-	-	-	-	-	-
1	Bottom Head Drain			OWN	-	-	-	-	-	-	-	-	-	-	-	-
				PRE	-	-	-	-	-	-	-	-	-	-	-	-

MONTICELLO Nuclear Generating Plant
3rd Interval ISI Plan Rev. 3 June 1, 1992 to May 31, 2002

Category, ItemNO, Class	Summary / CompID / System	Scope / Method / Procedure	Iso No. Comp. Desc. Code Case /Note		Period 1				Period 2				Period 3			
					1	2	3	4	1	2	3	4	1	2	3	4
B-J	101630		ISI-821A	ISI	-	-	-	-	-	-	-	-	-	-	-	-
B9.40	W- 7		Elbow-to-Pipe	AUG	-	-	-	-	-	-	-	-	-	-	-	-
1	Bottom Head Drain			OWN	-	-	-	-	-	-	-	-	-	-	-	-
				PRE	-	-	-	-	-	-	-	-	-	-	-	-
B-J	101631	ISI/MT/ISI-MT-1	ISI-821A	ISI	-	c	-	-	-	-	-	-	-	-	-	-
B9.40	W- 8		Pipe-to-Elbow	AUG	-	-	-	-	-	-	-	-	-	-	-	-
1	Bottom Head Drain			OWN	-	-	-	-	-	-	-	-	-	-	-	-
				PRE	-	-	-	-	-	-	-	-	-	-	-	-
B-J	101632	ISI/MT/ISI-MT-1	ISI-821A	ISI	-	c	-	-	-	-	-	-	-	-	-	-
B9.40	W- 9		Elbow-to-Pipe	AUG	-	-	-	-	-	-	-	-	-	-	-	-
1	Bottom Head Drain			OWN	-	-	-	-	-	-	-	-	-	-	-	-
				PRE	-	-	-	-	-	-	-	-	-	-	-	-
B-J	101633		ISI-821A	ISI	-	-	-	-	-	-	-	-	-	-	-	-
B9.40	W-10		Pipe-to-Elbow	AUG	-	-	-	-	-	-	-	-	-	-	-	-
1	Bottom Head Drain			OWN	-	-	-	-	-	-	-	-	-	-	-	-
				PRE	-	-	-	-	-	-	-	-	-	-	-	-
B-J	101634		ISI-821A	ISI	-	-	-	-	-	-	-	-	-	-	-	-
B9.40	W-11		Elbow-to-Pipe	AUG	-	-	-	-	-	-	-	-	-	-	-	-
1	Bottom Head Drain			OWN	-	-	-	-	-	-	-	-	-	-	-	-
				PRE	-	-	-	-	-	-	-	-	-	-	-	-
B-J	101635		ISI-821A	ISI	-	-	-	-	-	-	-	-	-	-	-	-
B9.40	W-12		Pipe-to-Coupling	AUG	-	-	-	-	-	-	-	-	-	-	-	-
1	Bottom Head Drain			OWN	-	-	-	-	-	-	-	-	-	-	-	-
				PRE	-	-	-	-	-	-	-	-	-	-	-	-
B-J	101636		ISI-821A	ISI	-	-	-	-	-	-	-	-	-	-	-	-
B9.40	W-13		Coupling-to-Pipe	AUG	-	-	-	-	-	-	-	-	-	-	-	-
1	Bottom Head Drain			OWN	-	-	-	-	-	-	-	-	-	-	-	-
				PRE	-	-	-	-	-	-	-	-	-	-	-	-
B-J	101637		ISI-821A	ISI	-	-	-	-	-	-	-	-	-	-	-	-
B9.40	W-14		Pipe-to-Coupling	AUG	-	-	-	-	-	-	-	-	-	-	-	-
1	Bottom Head Drain			OWN	-	-	-	-	-	-	-	-	-	-	-	-
				PRE	-	-	-	-	-	-	-	-	-	-	-	-
B-J	101638		ISI-821A	ISI	-	-	-	-	-	-	-	-	-	-	-	-
B9.40	W-15		Coupling-to-Pipe	AUG	-	-	-	-	-	-	-	-	-	-	-	-
1	Bottom Head Drain			OWN	-	-	-	-	-	-	-	-	-	-	-	-
				PRE	-	-	-	-	-	-	-	-	-	-	-	-
B-J	101639	ISI/MT/ISI-MT-1	ISI-821A	ISI	-	-	-	-	-	-	-	-	s	-	-	-
B9.40	W-16		Pipe-to-Elbow	AUG	-	-	-	-	-	-	-	-	-	-	-	-
1	Bottom Head Drain			OWN	-	-	-	-	-	-	-	-	-	-	-	-
				PRE	-	-	-	-	-	-	-	-	-	-	-	-

MONTICELLO Nuclear Generating Plant
3rd Interval ISI Plan Rev. 3 June 1, 1992 to May 31, 2002

Category, ItemNO, Class	Summary / CompID / System	Scope / Method / Procedure	Iso No. Comp. Desc. Code Case /Note		Period 1				Period 2				Period 3			
					1	2	3	4	1	2	3	4	1	2	3	4
B-J	101640	ISI/MT/ISI-MT-1	ISI-821A	ISI	-	-	-	-	-	-	-	-	s	-	-	-
B9.40	W-17		Elbow-to-Pipe	AUG	-	-	-	-	-	-	-	-	-	-	-	-
1	Bottom Head Drain			OWN	-	-	-	-	-	-	-	-	-	-	-	-
				PRE	-	-	-	-	-	-	-	-	-	-	-	-
B-J	101641		ISI-821A	ISI	-	-	-	-	-	-	-	-	-	-	-	-
B9.40	W-18		Pipe-to-Coupling	AUG	-	-	-	-	-	-	-	-	-	-	-	-
1	Bottom Head Drain			OWN	-	-	-	-	-	-	-	-	-	-	-	-
				PRE	-	-	-	-	-	-	-	-	-	-	-	-
B-J	101642		ISI-821A	ISI	-	-	-	-	-	-	-	-	-	-	-	-
B9.40	W-19		Coupling-to-Elbow	AUG	-	-	-	-	-	-	-	-	-	-	-	-
1	Bottom Head Drain			OWN	-	-	-	-	-	-	-	-	-	-	-	-
				PRE	-	-	-	-	-	-	-	-	-	-	-	-
B-J	101643		ISI-821A	ISI	-	-	-	-	-	-	-	-	-	-	-	-
B9.40	W-20		Elbow-to-Pipe	AUG	-	-	-	-	-	-	-	-	-	-	-	-
1	Bottom Head Drain			OWN	-	-	-	-	-	-	-	-	-	-	-	-
				PRE	-	-	-	-	-	-	-	-	-	-	-	-
B-J	101644		ISI-821A	ISI	-	-	-	-	-	-	-	-	-	-	-	-
B9.40	W-21		Pipe-to-Elbow	AUG	-	-	-	-	-	-	-	-	-	-	-	-
1	Bottom Head Drain			OWN	-	-	-	-	-	-	-	-	-	-	-	-
				PRE	-	-	-	-	-	-	-	-	-	-	-	-
B-J	101645		ISI-821A	ISI	-	-	-	-	-	-	-	-	-	-	-	-
B9.40	W-22		Elbow-to-Pipe	AUG	-	-	-	-	-	-	-	-	-	-	-	-
1	Bottom Head Drain			OWN	-	-	-	-	-	-	-	-	-	-	-	-
				PRE	-	-	-	-	-	-	-	-	-	-	-	-
B-J	101646	ISI/MT/ISI-MT-1	ISI-821A	ISI	c	-	-	-	-	-	-	-	-	-	-	-
B9.40	W-23		Pipe-to-Coupling	AUG	-	-	-	-	-	-	-	-	-	-	-	-
1	Bottom Head Drain			OWN	-	-	-	-	-	-	-	-	-	-	-	-
				PRE	-	-	-	-	-	-	-	-	-	-	-	-
B-J	101647	ISI/MT/ISI-MT-1	ISI-821A	ISI	c	-	-	-	-	-	-	-	-	-	-	-
B9.40	W-24		Coupling-to-Pipe	AUG	-	-	-	-	-	-	-	-	-	-	-	-
1	Bottom Head Drain			OWN	-	-	-	-	-	-	-	-	-	-	-	-
				PRE	-	-	-	-	-	-	-	-	-	-	-	-
B-J	101648	ISI/MT/ISI-MT-1	ISI-821A	ISI	c	-	-	-	-	-	-	-	-	-	-	-
B9.40	W-25		Pipe-to-Elbow	AUG	-	-	-	-	-	-	-	-	-	-	-	-
1	Bottom Head Drain			OWN	-	-	-	-	-	-	-	-	-	-	-	-
				PRE	-	-	-	-	-	-	-	-	-	-	-	-
B-J	101649	ISI/MT/ISI-MT-1	ISI-821A	ISI	c	-	-	-	-	-	-	-	-	-	-	-
B9.40	W-26		Elbow-to-Pipe	AUG	-	-	-	-	-	-	-	-	-	-	-	-
1	Bottom Head Drain			OWN	-	-	-	-	-	-	-	-	-	-	-	-
				PRE	-	-	-	-	-	-	-	-	-	-	-	-

MONTICELLO Nuclear Generating Plant
3rd Interval ISI Plan Rev. 3 June 1, 1992 to May 31, 2002

Category, ItemNO, Class	Summary / CompID / System	Scope / Method / Procedure	Iso No. Comp. Desc. Code Case /Note		Period 1				Period 2				Period 3			
					1	2	3	4	1	2	3	4	1	2	3	4
B-J	101650		ISI-821A	ISI	-	-	-	-	-	-	-	-	-	-	-	-
B9.40	W-27		Pipe-to-Elbow	AUG	-	-	-	-	-	-	-	-	-	-	-	-
1	Bottom Head Drain			OWN	-	-	-	-	-	-	-	-	-	-	-	-
				PRE	-	-	-	-	-	-	-	-	-	-	-	-
B-J	101651	ISI/MT/ISI-MT-1	ISI-821A	ISI	-	-	-	-	-	C	-	-	-	-	-	-
B9.40	W-28		Elbow-to-Pipe	AUG	-	-	-	-	-	-	-	-	-	-	-	-
1	Bottom Head Drain			OWN	-	-	-	-	-	-	-	-	-	-	-	-
				PRE	-	-	-	-	-	-	-	-	-	-	-	-
B-J	101652	ISI/MT/ISI-MT-1	ISI-821A	ISI	-	-	-	-	-	C	-	-	-	-	-	-
B9.40	W-29		Pipe-to-Elbow	AUG	-	-	-	-	-	-	-	-	-	-	-	-
1	Bottom Head Drain			OWN	-	-	-	-	-	-	-	-	-	-	-	-
				PRE	-	-	-	-	-	-	-	-	-	-	-	-
B-J	101653		ISI-821A	ISI	-	-	-	-	-	-	-	-	-	-	-	-
B9.40	W-30		Elbow-to-Pipe	AUG	-	-	-	-	-	-	-	-	-	-	-	-
1	Bottom Head Drain			OWN	-	-	-	-	-	-	-	-	-	-	-	-
				PRE	-	-	-	-	-	-	-	-	-	-	-	-
B-J	101654		ISI-821A	ISI	-	-	-	-	-	-	-	-	-	-	-	-
B9.40	W-31		Pipe-to-Valve	AUG	-	-	-	-	-	-	-	-	-	-	-	-
1	Bottom Head Drain			OWN	-	-	-	-	-	-	-	-	-	-	-	-
				PRE	-	-	-	-	-	-	-	-	-	-	-	-
B-J	101655		ISI-821A	ISI	-	-	-	-	-	-	-	-	-	-	-	-
B9.40	W-32		Valve-to-Pipe	AUG	-	-	-	-	-	-	-	-	-	-	-	-
1	Bottom Head Drain			OWN	-	-	-	-	-	-	-	-	-	-	-	-
				PRE	-	-	-	-	-	-	-	-	-	-	-	-
B-J	101656		ISI-821A	ISI	-	-	-	-	-	-	-	-	-	-	-	-
B9.40	W-33		Pipe-to-Pipe	AUG	-	-	-	-	-	-	-	-	-	-	-	-
1	Bottom Head Drain			OWN	-	-	-	-	-	-	-	-	-	-	-	-
				PRE	-	-	-	-	-	-	-	-	-	-	-	-
B-J	101657		ISI-821A	ISI	-	-	-	-	-	-	-	-	-	-	-	-
B9.40	W-34		Pipe-to-Reducer	AUG	-	-	-	-	-	-	-	-	-	-	-	-
1	Bottom Head Drain			OWN	-	-	-	-	-	-	-	-	-	-	-	-
				PRE	-	-	-	-	-	-	-	-	-	-	-	-
B-J	101658	ISI/MT/ISI-MT-1	ISI-821A	ISI	-	-	-	-	-	-	-	-	S	-	-	-
B9.11	W-35	ISI/UT/ISI-UT-1	Reducer-to-Tee	AUG	-	-	-	-	-	-	-	-	-	-	-	-
1	Bottom Head Drain			OWN	-	-	-	-	-	-	-	-	-	-	-	-
				PRE	-	-	-	-	-	-	-	-	-	-	-	-
B-J	101659		ISI-821A	ISI	-	-	-	-	-	-	-	-	-	-	-	-
B9.11	W-36		Tee-to-Flange	AUG	-	-	-	-	-	-	-	-	-	-	-	-
1	Bottom Head Drain			OWN	-	-	-	-	-	-	-	-	-	-	-	-
				PRE	-	-	-	-	-	-	-	-	-	-	-	-

MONTICELLO Nuclear Generating Plant
3rd Interval ISI Plan Rev. 3 June 1, 1992 to May 31, 2002

Category, ItemNO, Class	Summary / CompID / System	Scope / Method / Procedure	Iso No. Comp. Desc. Code Case /Note		Period 1				Period 2				Period 3			
					1	2	3	4	1	2	3	4	1	2	3	4
B-J	101660		ISI-821A	ISI	-	-	-	-	-	-	-	-	-	-	-	-
B9.11	W-37		Tee-to-Pipe	AUG	-	-	-	-	-	-	-	-	-	-	-	-
1	Bottom Head Drain			OWN	-	-	-	-	-	-	-	-	-	-	-	-
				PRE	-	-	-	-	-	-	-	-	-	-	-	-
B-J	101661		ISI-821A	ISI	-	-	-	-	-	-	-	-	-	-	-	-
B9.11	W-38		Pipe-to-Reducer	AUG	-	-	-	-	-	-	-	-	-	-	-	-
1	Bottom Head Drain			OWN	-	-	-	-	-	-	-	-	-	-	-	-
				PRE	-	-	-	-	-	-	-	-	-	-	-	-
B-J	101662		ISI-821A	ISI	-	-	-	-	-	-	-	-	-	-	-	-
B9.40	W-39		Reducer-to-Pipe	AUG	-	-	-	-	-	-	-	-	-	-	-	-
1	Bottom Head Drain			OWN	-	-	-	-	-	-	-	-	-	-	-	-
				PRE	-	-	-	-	-	-	-	-	-	-	-	-
B-J	101663		ISI-821A	ISI	-	-	-	-	-	-	-	-	-	-	-	-
B9.40	W-40		Pipe-to-Tee	AUG	-	-	-	-	-	-	-	-	-	-	-	-
1	Bottom Head Drain			OWN	-	-	-	-	-	-	-	-	-	-	-	-
				PRE	-	-	-	-	-	-	-	-	-	-	-	-
B-J	101664		ISI-821A	ISI	-	-	-	-	-	-	-	-	-	-	-	-
B9.40	W-41		Tee-to-Reducer	AUG	-	-	-	-	-	-	-	-	-	-	-	-
1	Bottom Head Drain			OWN	-	-	-	-	-	-	-	-	-	-	-	-
				PRE	-	-	-	-	-	-	-	-	-	-	-	-
B-J	101665		ISI-821A	ISI	-	-	-	-	-	-	-	-	-	-	-	-
B9.40	W-42		Tee-to-Pipe	AUG	-	-	-	-	-	-	-	-	-	-	-	-
1	Bottom Head Drain			OWN	-	-	-	-	-	-	-	-	-	-	-	-
				PRE	-	-	-	-	-	-	-	-	-	-	-	-
B-J	101666		ISI-821A	ISI	-	-	-	-	-	-	-	-	-	-	-	-
B9.40	W-43		Pipe-to-Elbow	AUG	-	-	-	-	-	-	-	-	-	-	-	-
1	Bottom Head Drain			OWN	-	-	-	-	-	-	-	-	-	-	-	-
				PRE	-	-	-	-	-	-	-	-	-	-	-	-
B-J	101667		ISI-821A	ISI	-	-	-	-	-	-	-	-	-	-	-	-
B9.40	W-44		Elbow-to-Pipe	AUG	-	-	-	-	-	-	-	-	-	-	-	-
1	Bottom Head Drain			OWN	-	-	-	-	-	-	-	-	-	-	-	-
				PRE	-	-	-	-	-	-	-	-	-	-	-	-
B-J	101668		ISI-821A	ISI	-	-	-	-	-	-	-	-	-	-	-	-
B9.40	W-45		Pipe-to-Coupling	AUG	-	-	-	-	-	-	-	-	-	-	-	-
1	Bottom Head Drain			OWN	-	-	-	-	-	-	-	-	-	-	-	-
				PRE	-	-	-	-	-	-	-	-	-	-	-	-
B-J	101669	ISI/MT/ISI-MT-1	ISI-821A	ISI	-	-	-	-	-	-	-	-	-	s	-	-
B9.40	W-46		Coupling-to-Pipe	AUG	-	-	-	-	-	-	-	-	-	-	-	-
1	Bottom Head Drain			OWN	-	-	-	-	-	-	-	-	-	-	-	-
				PRE	-	-	-	-	-	-	-	-	-	-	-	-

MONTICELLO Nuclear Generating Plant
3rd Interval ISI Plan Rev. 3 June 1, 1992 to May 31, 2002

Category, ItemNO, Class	Summary / CompID / System	Scope / Method / Procedure	Iso No. Comp. Desc. Code Case /Note		Period 1				Period 2				Period 3			
					1	2	3	4	1	2	3	4	1	2	3	4
B-J	101670		ISI-821A	ISI	-	-	-	-	-	-	-	-	-	-	-	-
B9.40	W-47		Pipe-to-Coupling	AUG	-	-	-	-	-	-	-	-	-	-	-	-
1	Bottom Head Drain			OWN	-	-	-	-	-	-	-	-	-	-	-	-
				PRE	-	-	-	-	-	-	-	-	-	-	-	-
B-J	101671		ISI-821A	ISI	-	-	-	-	-	-	-	-	-	-	-	-
B9.40	W-48		Coupling-to-Pipe	AUG	-	-	-	-	-	-	-	-	-	-	-	-
1	Bottom Head Drain			OWN	-	-	-	-	-	-	-	-	-	-	-	-
				PRE	-	-	-	-	-	-	-	-	-	-	-	-
B-J	101672		ISI-821A	ISI	-	-	-	-	-	-	-	-	-	-	-	-
B9.40	W-49		Pipe-to-Coupling	AUG	-	-	-	-	-	-	-	-	-	-	-	-
1	Bottom Head Drain			OWN	-	-	-	-	-	-	-	-	-	-	-	-
				PRE	-	-	-	-	-	-	-	-	-	-	-	-
B-J	101673		ISI-821A	ISI	-	-	-	-	-	-	-	-	-	-	-	-
B9.40	W-51		Pipe-to-Coupling	AUG	-	-	-	-	-	-	-	-	-	-	-	-
1	Bottom Head Drain			OWN	-	-	-	-	-	-	-	-	-	-	-	-
				PRE	-	-	-	-	-	-	-	-	-	-	-	-
B-J	101674		ISI-821A	ISI	-	-	-	-	-	-	-	-	-	-	-	-
B9.40	W-52		Coupling-to-Pipe	AUG	-	-	-	-	-	-	-	-	-	-	-	-
1	Bottom Head Drain			OWN	-	-	-	-	-	-	-	-	-	-	-	-
				PRE	-	-	-	-	-	-	-	-	-	-	-	-
B-J	101675		ISI-821A	ISI	-	-	-	-	-	-	-	-	-	-	-	-
B9.40	W-53		Pipe-to-Elbow	AUG	-	-	-	-	-	-	-	-	-	-	-	-
1	Bottom Head Drain			OWN	-	-	-	-	-	-	-	-	-	-	-	-
				PRE	-	-	-	-	-	-	-	-	-	-	-	-
B-J	101676	ISI/MT/ISI-MT-1	ISI-821A	ISI	-	c	-	-	-	-	-	-	-	-	-	-
B9.40	W-54		Elbow-to-Pipe	AUG	-	-	-	-	-	-	-	-	-	-	-	-
1	Bottom Head Drain			OWN	-	-	-	-	-	-	-	-	-	-	-	-
				PRE	-	-	-	-	-	-	-	-	-	-	-	-
B-J	101677	ISI/MT/ISI-MT-1	ISI-821A	ISI	-	-	-	-	-	-	-	-	s	-	-	-
B9.40	W-55		Pipe-to-Elbow	AUG	-	-	-	-	-	-	-	-	-	-	-	-
1	Bottom Head Drain			OWN	-	-	-	-	-	-	-	-	-	-	-	-
				PRE	-	-	-	-	-	-	-	-	-	-	-	-
B-J	101678		ISI-821A	ISI	-	-	-	-	-	-	-	-	-	-	-	-
B9.40	W-56		Elbow-to-Pipe	AUG	-	-	-	-	-	-	-	-	-	-	-	-
1	Bottom Head Drain			OWN	-	-	-	-	-	-	-	-	-	-	-	-
				PRE	-	-	-	-	-	-	-	-	-	-	-	-
B-J	101679		ISI-821A	ISI	-	-	-	-	-	-	-	-	-	-	-	-
B9.40	W-57		Pipe-to-Elbow	AUG	-	-	-	-	-	-	-	-	-	-	-	-
1	Bottom Head Drain			OWN	-	-	-	-	-	-	-	-	-	-	-	-
				PRE	-	-	-	-	-	-	-	-	-	-	-	-

MONTICELLO Nuclear Generating Plant
3rd Interval ISI Plan Rev. 3 June 1, 1992 to May 31, 2002

Category, ItemNO, Class	Summary / CompID / System	Scope / Method / Procedure	Iso No. Comp. Desc. Code Case /Note		Period 1				Period 2				Period 3			
					1	2	3	4	1	2	3	4	1	2	3	4
B-J	101680		ISI-821A	ISI	-	-	-	-	-	-	-	-	-	-	-	-
B9.40	W-58		Elbow-to-Pipe	AUG	-	-	-	-	-	-	-	-	-	-	-	-
1	Bottom Head Drain			OWN	-	-	-	-	-	-	-	-	-	-	-	-
				PRE	-	-	-	-	-	-	-	-	-	-	-	-
B-J	101681	ISI/MT/ISI-MT-1	ISI-821A	ISI	-	c	-	-	-	-	-	-	-	-	-	-
B9.40	W-59		Pipe-to-Sockolet	AUG	-	-	-	-	-	-	-	-	-	-	-	-
1	Bottom Head Drain			OWN	-	-	-	-	-	-	-	-	-	-	-	-
				PRE	-	-	-	-	-	-	-	-	-	-	-	-
F-B	101682	ISI/VT/ISI-VT-2.0	ISI-8292-42A	ISI	-	-	-	-	c	-	-	-	-	-	-	-
F-A,B,C	DVMX Supp A		DVMX Pump Support	AUG	-	-	-	-	-	-	-	-	-	-	-	-
2	HPCI Pumps			OWN	-	-	-	-	-	-	-	-	-	-	-	-
				PRE	-	-	-	-	-	-	-	-	-	-	-	-
F-B	101683	ISI/VT/ISI-VT-2.0	ISI-8292-42A	ISI	-	-	-	-	c	-	-	-	-	-	-	-
F-A,B,C	DVMX Supp B		DVMX Pump Support	AUG	-	-	-	-	-	-	-	-	-	-	-	-
2	HPCI Pumps			OWN	-	-	-	-	-	-	-	-	-	-	-	-
				PRE	-	-	-	-	-	-	-	-	-	-	-	-
F-B	101684	ISI/VT/ISI-VT-2.0	ISI-8292-42A	ISI	-	-	-	-	-	-	-	-	s	-	-	-
F-A,B,C	DVMX Supp C		DVMX Pump Support	AUG	-	-	-	-	-	-	-	-	-	-	-	-
2	HPCI Pumps			OWN	-	-	-	-	-	-	-	-	-	-	-	-
				PRE	-	-	-	-	-	-	-	-	-	-	-	-
F-B	101685	ISI/VT/ISI-VT-2.0	ISI-8292-42A	ISI	-	-	-	-	-	-	-	-	s	-	-	-
F-A,B,C	DVMX Supp D		DVMX Pump Support	AUG	-	-	-	-	-	-	-	-	-	-	-	-
2	HPCI Pumps			OWN	-	-	-	-	-	-	-	-	-	-	-	-
				PRE	-	-	-	-	-	-	-	-	-	-	-	-
F-B	101686	ISI/VT/ISI-VT-2.0	ISI-8292-42A	ISI	c	-	-	-	-	-	-	-	-	-	-	-
F-A,B,C	DVS Supp A		DVS Pump Support	AUG	-	-	-	-	-	-	-	-	-	-	-	-
2	HPCI Pumps			OWN	-	-	-	-	-	-	-	-	-	-	-	-
				PRE	-	-	-	-	-	-	-	-	-	-	-	-
F-B	101687	ISI/VT/ISI-VT-2.0	ISI-8292-42A	ISI	c	-	-	-	-	-	-	-	-	-	-	-
F-A,B,C	DVS Supp B		DVS Pump Support	AUG	-	-	-	-	-	-	-	-	-	-	-	-
2	HPCI Pumps			OWN	-	-	-	-	-	-	-	-	-	-	-	-
				PRE	-	-	-	-	-	-	-	-	-	-	-	-
F-B	101688	ISI/VT/ISI-VT-2.0	ISI-8292-42A	ISI	-	c	-	-	-	-	-	-	-	-	-	-
F-A,B,C	DVS Supp C		DVS Pump Support	AUG	-	-	-	-	-	-	-	-	-	-	-	-
2	HPCI Pumps			OWN	-	-	-	-	-	-	-	-	-	-	-	-
				PRE	-	-	-	-	-	-	-	-	-	-	-	-
F-B	101689	ISI/VT/ISI-VT-2.0	ISI-8292-42A	ISI	-	c	-	-	-	-	-	-	-	-	-	-
F-A,B,C	DVS Supp D		DVS Pump Support	AUG	-	-	-	-	-	-	-	-	-	-	-	-
2	HPCI Pumps			OWN	-	-	-	-	-	-	-	-	-	-	-	-
				PRE	-	-	-	-	-	-	-	-	-	-	-	-

MONTICELLO Nuclear Generating Plant
3rd Interval ISI Plan Rev. 3 June 1, 1992 to May 31, 2002

Category, ItemNO, Class	Summary / CompID / System	Scope / Method / Procedure	Iso No. Comp. Desc. Code Case /Note		Period 1				Period 2				Period 3			
					1	2	3	4	1	2	3	4	1	2	3	4
C-F-2	101690		ISI-8292-42A	ISI	-	-	-	-	-	-	-	-	-	-	-	-
CX.XX	W- 1		Pipe-to-Pump	AUG	-	-	-	-	-	-	-	-	-	-	-	-
2	HPCI Pumps			OWN	-	-	-	-	-	-	-	-	-	-	-	-
				PRE	-	-	-	-	-	-	-	-	-	-	-	-
C-F-2	101691		ISI-8292-42A	ISI	-	-	-	-	-	-	-	-	-	-	-	-
CX.XX	W- 2		Pump-to-Pipe	AUG	-	-	-	-	-	-	-	-	-	-	-	-
2	HPCI Pumps			OWN	-	-	-	-	-	-	-	-	-	-	-	-
				PRE	-	-	-	-	-	-	-	-	-	-	-	-
C-F-2	101692		ISI-8292-42A	ISI	-	-	-	-	-	-	-	-	-	-	-	-
CX.XX	W- 3		Pipe-to-Flange	AUG	-	-	-	-	-	-	-	-	-	-	-	-
2	HPCI Pumps			OWN	-	-	-	-	-	-	-	-	-	-	-	-
				PRE	-	-	-	-	-	-	-	-	-	-	-	-
C-F-2	101693		ISI-8292-42A	ISI	-	-	-	-	-	-	-	-	-	-	-	-
CX.XX	W- 4		Elbow-to-Pipe	AUG	-	-	-	-	-	-	-	-	-	-	-	-
2	HPCI Pumps			OWN	-	-	-	-	-	-	-	-	-	-	-	-
				PRE	-	-	-	-	-	-	-	-	-	-	-	-
C-F-2	101694		ISI-8292-42A	ISI	-	-	-	-	-	-	-	-	-	-	-	-
CX.XX	W- 5		Pipe-to-Elbow	AUG	-	-	-	-	-	-	-	-	-	-	-	-
2	HPCI Pumps			OWN	-	-	-	-	-	-	-	-	-	-	-	-
				PRE	-	-	-	-	-	-	-	-	-	-	-	-
C-F-2	101695		ISI-8292-42A	ISI	-	-	-	-	-	-	-	-	-	-	-	-
CX.XX	W- 6		Elbow-to-Pipe	AUG	-	-	-	-	-	-	-	-	-	-	-	-
2	HPCI Pumps			OWN	-	-	-	-	-	-	-	-	-	-	-	-
				PRE	-	-	-	-	-	-	-	-	-	-	-	-
C-F-2	101696		ISI-8292-42A	ISI	-	-	-	-	-	-	-	-	-	-	-	-
CX.XX	W- 7		Flange-to-Elbow	AUG	-	-	-	-	-	-	-	-	-	-	-	-
2	HPCI Pumps			OWN	-	-	-	-	-	-	-	-	-	-	-	-
				PRE	-	-	-	-	-	-	-	-	-	-	-	-
F-B	101708		ISI-93268-1A	ISI	-	-	-	-	-	-	-	-	-	-	-	-
F-A,B,C	H- 7		Box Restraint	AUG	-	-	-	-	-	-	-	-	-	-	-	-
2	CRD Scram Header A			OWN	-	-	-	-	-	-	-	-	-	-	-	-
				PRE	-	-	-	-	-	-	-	-	-	-	-	-
F-B	101709		ISI-93268-1A	ISI	-	-	-	-	-	-	-	-	-	-	-	-
F-A,B,C	H- 8		Strut / Clamp	AUG	-	-	-	-	-	-	-	-	-	-	-	-
2	CRD Scram Header A			OWN	-	-	-	-	-	-	-	-	-	-	-	-
				PRE	-	-	-	-	-	-	-	-	-	-	-	-
F-B	101710		ISI-93268-1A	ISI	-	-	-	-	-	-	-	-	-	-	-	-
F-A,B,C	H- 9		Strut / Clamp	AUG	-	-	-	-	-	-	-	-	-	-	-	-
2	CRD Scram Header A			OWN	-	-	-	-	-	-	-	-	-	-	-	-
				PRE	-	-	-	-	-	-	-	-	-	-	-	-

MONTICELLO Nuclear Generating Plant
3rd Interval ISI Plan Rev. 3 June 1, 1992 to May 31, 2002

Category, ItemNO, Class	Summary / CompID / System	Scope / Method / Procedure	Iso No. Comp. Desc. Code Case /Note		Period 1				Period 2				Period 3			
					1	2	3	4	1	2	3	4	1	2	3	4
F-B	101711	ISI/VT/ISI-VT-2.0	ISI-93268-1A	ISI	-	-	-	-	-	-	-	-	-	S	-	-
F-A,B,C	H-10		Restraint	AUG	-	-	-	-	-	-	-	-	-	-	-	-
2	CRD Scram Header A			OWN	-	-	-	-	-	-	-	-	-	-	-	-
				PRE	-	-	-	-	-	-	-	-	-	-	-	-
F-B	101712		ISI-93268-1A	ISI	-	-	-	-	-	-	-	-	-	-	-	-
F-A,B,C	H-11		Rod / Clamp	AUG	-	-	-	-	-	-	-	-	-	-	-	-
2	CRD Scram Header A			OWN	-	-	-	-	-	-	-	-	-	-	-	-
				PRE	-	-	-	-	-	-	-	-	-	-	-	-
F-B	101713	ISI/VT/ISI-VT-2.0	ISI-93268-1A	ISI	-	-	-	-	-	-	-	-	S	-	-	-
F-A,B,C	H-12		Snubber/ Clamp	AUG	-	-	-	-	-	-	-	-	-	-	-	-
2	CRD Scram Header A			OWN	-	-	-	-	-	-	-	-	-	-	-	-
				PRE	-	-	-	-	-	-	-	-	-	-	-	-
F-B	101714	ISI/VT/ISI-VT-2.0	ISI-93268-1A	ISI	c	B	-	-	-	-	-	-	-	-	-	-
F-A,B,C	H-13		Strut / Clamp	AUG	-	-	-	-	-	-	-	-	-	-	-	-
2	CRD Scram Header A			OWN	-	-	-	-	-	-	-	-	-	-	-	-
				PRE	-	-	-	-	-	-	-	-	-	-	-	-
F-B	101715	ISI/VT/ISI-VT-2.0	ISI-93268-1A	ISI	-	-	-	-	-	-	-	-	S	-	-	-
F-A,B,C	H-14		Strut / Clamp	AUG	-	-	-	-	-	-	-	-	-	-	-	-
2	CRD Scram Header A			OWN	-	-	-	-	-	-	-	-	-	-	-	-
				PRE	-	-	-	-	-	-	-	-	-	-	-	-
C-C	101721	ISI/VT/ISI-VT-2.0	ISI-93268-1A	ISI	c	-	-	-	-	-	-	-	-	-	-	-
C3.20	H-20	ISI/MT/ISI-MT-1	Tank Support	AUG	-	-	-	-	-	-	-	-	-	-	-	-
2	CRD Scram Header A			OWN	-	-	-	-	-	-	-	-	-	-	-	-
				PRE	-	-	-	-	-	-	-	-	-	-	-	-
C-F-1	101722		ISI-93268-1A	ISI	-	-	-	-	-	-	-	-	-	-	-	-
C5.10	W-34 LS U&D		Reducer-to-Pipe	AUG	-	-	-	-	-	-	-	-	-	-	-	-
2	CRD Scram Header A			OWN	-	-	-	-	-	-	-	-	-	-	-	-
				PRE	-	-	-	-	-	-	-	-	-	-	-	-
C-F-1	101731	ISI/PT/ISI-PT-1	ISI-93268-1A	ISI	c	-	-	-	-	-	-	-	-	-	-	-
C5.10	W- 9 LS U&D	ISI/UT/ISI-UT-16	Reducer-to-Pipe	AUG	-	-	-	-	-	-	-	-	-	-	-	-
2	CRD Scram Header A			OWN	-	-	-	-	-	-	-	-	-	-	-	-
				PRE	-	-	-	-	-	-	-	-	-	-	-	-
C-F-1	101732		ISI-93268-1A	ISI	-	-	-	-	-	-	-	-	-	-	-	-
C5.10	W-10 LS U&D		Pipe-to-Tee	AUG	-	-	-	-	-	-	-	-	-	-	-	-
2	CRD Scram Header A			OWN	-	-	-	-	-	-	-	-	-	-	-	-
				PRE	-	-	-	-	-	-	-	-	-	-	-	-
C-F-2	101733		ISI-93268-1A	ISI	-	-	-	-	-	-	-	-	-	-	-	-
C5.51	W-11		Flange-to-Pipe	AUG	-	-	-	-	-	-	-	-	-	-	-	-
2	CRD Scram Header A			OWN	-	-	-	-	-	-	-	-	-	-	-	-
				PRE	-	-	-	-	-	-	-	-	-	-	-	-

MONTICELLO Nuclear Generating Plant
3rd Interval ISI Plan Rev. 3 June 1, 1992 to May 31, 2002

Category, ItemNO, Class	Summary / CompID / System	Scope / Method / Procedure	Iso No. Comp. Desc. Code Case /Note		Period 1				Period 2				Period 3			
					1	2	3	4	1	2	3	4	1	2	3	4
C-F-2	101734		ISI-93268-1A	ISI	-	-	-	-	-	-	-	-	-	-	-	-
C5.51	W-12		Pipe-to-Pipe	AUG	-	-	-	-	-	-	-	-	-	-	-	-
2	CRD Scram Header A			OWN	-	-	-	-	-	-	-	-	-	-	-	-
				PRE	-	-	-	-	-	-	-	-	-	-	-	-
C-F-2	101735		ISI-93268-1A	ISI	-	-	-	-	-	-	-	-	-	-	-	-
C5.51	W-13		Pipe-to-Pipe	AUG	-	-	-	-	-	-	-	-	-	-	-	-
2	CRD Scram Header A			OWN	-	-	-	-	-	-	-	-	-	-	-	-
				PRE	-	-	-	-	-	-	-	-	-	-	-	-
C-F-2	101736		ISI-93268-1A	ISI	-	-	-	-	-	-	-	-	-	-	-	-
C5.51	W-14		Pipe-to-Pipe	AUG	-	-	-	-	-	-	-	-	-	-	-	-
2	CRD Scram Header A			OWN	-	-	-	-	-	-	-	-	-	-	-	-
				PRE	-	-	-	-	-	-	-	-	-	-	-	-
C-F-2	101737	ISI/PT/ISI-PT-1	ISI-93268-1A	ISI	-	-	-	-	-	-	-	-	-	s	-	-
C5.51	W-15	ISI/UT/ISI-UT-16	Pipe-to-Reducer	AUG	-	-	-	-	-	-	-	-	-	-	-	-
2	CRD Scram Header A		NOTE:CC	OWN	-	-	-	-	-	-	-	-	-	-	-	-
				PRE	-	-	-	-	-	-	-	-	-	-	-	-
C-F-1	101738		ISI-93268-1A	ISI	-	-	-	-	-	-	-	-	-	-	-	-
C5.10	W-16 LS D		Reducer-to-Tee	AUG	-	-	-	-	-	-	-	-	-	-	-	-
2	CRD Scram Header A			OWN	-	-	-	-	-	-	-	-	-	-	-	-
				PRE	-	-	-	-	-	-	-	-	-	-	-	-
C-F-1	101739	ISI/MT/ISI-PT-1	ISI-93268-1A	ISI	-	-	-	-	-	-	-	-	-	s	-	-
C5.10	W-17 LS U&D	ISI/UT/ISI-UT-16	Tee-to-Pipe	AUG	-	-	-	-	-	-	-	-	-	-	-	-
2	CRD Scram Header A			OWN	-	-	-	-	-	-	-	-	-	-	-	-
				PRE	-	-	-	-	-	-	-	-	-	-	-	-
C-F-1	101740		ISI-93268-1A	ISI	-	-	-	-	-	-	-	-	-	-	-	-
C5.10	W-18 LS U&D		Pipe-to-Tee	AUG	-	-	-	-	-	-	-	-	-	-	-	-
2	CRD Scram Header A			OWN	-	-	-	-	-	-	-	-	-	-	-	-
				PRE	-	-	-	-	-	-	-	-	-	-	-	-
C-F-1	101746		ISI-93268-1A	ISI	-	-	-	-	-	-	-	-	-	-	-	-
C5.10	W-24 LS D		Reducer-to-Reducer	AUG	-	-	-	-	-	-	-	-	-	-	-	-
2	CRD Scram Header A			OWN	-	-	-	-	-	-	-	-	-	-	-	-
				PRE	-	-	-	-	-	-	-	-	-	-	-	-
C-F-1	101747		ISI-93268-1A	ISI	-	-	-	-	-	-	-	-	-	-	-	-
C5.10	W-25 LS U&D		Reducer-to-Tee	AUG	-	-	-	-	-	-	-	-	-	-	-	-
2	CRD Scram Header A			OWN	-	-	-	-	-	-	-	-	-	-	-	-
				PRE	-	-	-	-	-	-	-	-	-	-	-	-
C-F-1	101748		ISI-93268-1A	ISI	-	-	-	-	-	-	-	-	-	-	-	-
C5.10	W-26 LS U&D		Tee-to-Elbow	AUG	-	-	-	-	-	-	-	-	-	-	-	-
2	CRD Scram Header A			OWN	-	-	-	-	-	-	-	-	-	-	-	-
				PRE	-	-	-	-	-	-	-	-	-	-	-	-

MONTICELLO Nuclear Generating Plant
3rd Interval ISI Plan Rev. 3 June 1, 1992 to May 31, 2002

Category, ItemNO, Class	Summary / CompID / System	Scope / Method / Procedure	Iso No. Comp. Desc. Code Case /Note		Period 1				Period 2				Period 3			
					1	2	3	4	1	2	3	4	1	2	3	4
C-F-1	101749		ISI-93268-1A	ISI	-	-	-	-	-	-	-	-	-	-	-	-
C5.10	W-27 LS U&D		Elbow-to-Pipe	AUG	-	-	-	-	-	-	-	-	-	-	-	-
2	CRD Scram Header A			OWN	-	-	-	-	-	-	-	-	-	-	-	-
				PRE	-	-	-	-	-	-	-	-	-	-	-	-
C-F-1	101750		ISI-93268-1A	ISI	-	-	-	-	-	-	-	-	-	-	-	-
C5.10	W-28 LS U&D		Pipe-to-Elbow (45°)	AUG	-	-	-	-	-	-	-	-	-	-	-	-
2	CRD Scram Header A			OWN	-	-	-	-	-	-	-	-	-	-	-	-
				PRE	-	-	-	-	-	-	-	-	-	-	-	-
C-F-1	101751		ISI-93268-1A	ISI	-	-	-	-	-	-	-	-	-	-	-	-
C5.10	W-29 LS U&D		Elbow-to-Pipe	AUG	-	-	-	-	-	-	-	-	-	-	-	-
2	CRD Scram Header A			OWN	-	-	-	-	-	-	-	-	-	-	-	-
				PRE	-	-	-	-	-	-	-	-	-	-	-	-
C-F-1	101752	ISI/MT/ISI-PT-1	ISI-93268-1A	ISI	c	-	-	-	-	-	-	-	-	-	-	-
C5.10	W-30 LS U&D	ISI/UT/ISI-UT-16	Pipe-to-Elbow (45°)	AUG	-	-	-	-	-	-	-	-	-	-	-	-
2	CRD Scram Header A			OWN	-	-	-	-	-	-	-	-	-	-	-	-
				PRE	-	-	-	-	-	-	-	-	-	-	-	-
C-F-1	101753		ISI-93268-1A	ISI	-	-	-	-	-	-	-	-	-	-	-	-
C5.10	W-31 LS U&D		Elbow-to-Pipe	AUG	-	-	-	-	-	-	-	-	-	-	-	-
2	CRD Scram Header A			OWN	-	-	-	-	-	-	-	-	-	-	-	-
				PRE	-	-	-	-	-	-	-	-	-	-	-	-
C-F-1	101754		ISI-93268-1A	ISI	-	-	-	-	-	-	-	-	-	-	-	-
C5.10	W-32 LS U&D		Pipe-to-Elbow	AUG	-	-	-	-	-	-	-	-	-	-	-	-
2	CRD Scram Header A			OWN	-	-	-	-	-	-	-	-	-	-	-	-
				PRE	-	-	-	-	-	-	-	-	-	-	-	-
C-F-1	101755		ISI-93268-1A	ISI	-	-	-	-	-	-	-	-	-	-	-	-
C5.10	W-33 LS U&D		Elbow-to-Reducer	AUG	-	-	-	-	-	-	-	-	-	-	-	-
2	CRD Scram Header A			OWN	-	-	-	-	-	-	-	-	-	-	-	-
				PRE	-	-	-	-	-	-	-	-	-	-	-	-
C-F-1	101756		ISI-93268-1A	ISI	-	-	-	-	-	-	-	-	-	-	-	-
C5.10	W-35 LS U&D		Pipe-to-Cap	AUG	-	-	-	-	-	-	-	-	-	-	-	-
2	CRD Scram Header A			OWN	-	-	-	-	-	-	-	-	-	-	-	-
				PRE	-	-	-	-	-	-	-	-	-	-	-	-
F-B	101802		ISI-93268-3A	ISI	-	-	-	-	-	-	-	-	-	-	-	-
F-A,B,C	H- 5		Box Restraint	AUG	-	-	-	-	-	-	-	-	-	-	-	-
1	CRD Scram Header B			OWN	-	-	-	-	-	-	-	-	-	-	-	-
				PRE	-	-	-	-	-	-	-	-	-	-	-	-
F-C	101803		ISI-93268-3A	ISI	-	-	-	-	-	-	-	-	-	-	-	-
F-A,B,C	H- 6		Rod / Clamp	AUG	-	-	-	-	-	-	-	-	-	-	-	-
1	CRD Scram Header B			OWN	-	-	-	-	-	-	-	-	-	-	-	-
				PRE	-	-	-	-	-	-	-	-	-	-	-	-

MONTICELLO Nuclear Generating Plant
3rd Interval ISI Plan Rev. 3 June 1, 1992 to May 31, 2002

Category, ItemNO, Class	Summary / CompID / System	Scope / Method / Procedure	Iso No. Comp. Desc. Code Case /Note		Period 1				Period 2				Period 3			
					1	2	3	4	1	2	3	4	1	2	3	4
C-C	101804	ISI/MT/ISI-MT-1	ISI-93268-3A	ISI	-	-	-	-	c	-	-	-	-	-	-	-
C3.20	H- 7	ISI/VT/ISI-VT-2.0	Restraint / 4 Lugs	AUG	-	-	-	-	-	-	-	-	-	-	-	-
2	CRD Scram Header B			OWN	-	-	-	-	-	-	-	-	-	-	-	-
				PRE	-	-	-	-	-	-	-	-	-	-	-	-
F-B	101806		ISI-93268-3A	ISI	-	-	-	-	-	-	-	-	-	-	-	-
F-A,B,C	H- 8		Box Restraint	AUG	-	-	-	-	-	-	-	-	-	-	-	-
1	CRD Scram Header B			OWN	-	-	-	-	-	-	-	-	-	-	-	-
				PRE	-	-	-	-	-	-	-	-	-	-	-	-
F-B	101812		ISI-93268-3A	ISI	-	-	-	-	-	-	-	-	-	-	-	-
F-A,B,C	H-13		Box Restraint	AUG	-	-	-	-	-	-	-	-	-	-	-	-
1	CRD Scram Header B			OWN	-	-	-	-	-	-	-	-	-	-	-	-
				PRE	-	-	-	-	-	-	-	-	-	-	-	-
C-C	101815	ISI/PT/ISI-PT-1	ISI-93268-3A	ISI	-	-	-	-	c	-	-	-	-	-	-	-
C3.20	H-14	ISI/VT/ISI-VT-2.0	Tank Support	AUG	-	-	-	-	-	-	-	-	-	-	-	-
2	CRD Scram Header B			OWN	-	-	-	-	-	-	-	-	-	-	-	-
				PRE	-	-	-	-	-	-	-	-	-	-	-	-
C-F-1	101824		ISI-93268-3A	ISI	-	-	-	-	-	-	-	-	-	-	-	-
C5.10	W- 9 LS U&D		Reducer-to-Pipe	AUG	-	-	-	-	-	-	-	-	-	-	-	-
2	CRD Scram Header B			OWN	-	-	-	-	-	-	-	-	-	-	-	-
				PRE	-	-	-	-	-	-	-	-	-	-	-	-
C-F-1	101825		ISI-93268-3A	ISI	-	-	-	-	-	-	-	-	-	-	-	-
C5.10	W-10 LS U&D		Pipe-to-Tee	AUG	-	-	-	-	-	-	-	-	-	-	-	-
2	CRD Scram Header B			OWN	-	-	-	-	-	-	-	-	-	-	-	-
				PRE	-	-	-	-	-	-	-	-	-	-	-	-
C-F-2	101826	ISI/MT/ISI-MT-1	ISI-93268-3A	ISI	-	-	-	-	c	-	-	-	-	-	-	-
C5.51	W-11	ISI/UT/ISI-UT-1	Flange-to-Pipe	AUG	-	-	-	-	-	-	-	-	-	-	-	-
2	CRD Scram Header B			OWN	-	-	-	-	-	-	-	-	-	-	-	-
				PRE	-	-	-	-	-	-	-	-	-	-	-	-
C-F-2	101827		ISI-93268-3A	ISI	-	-	-	-	-	-	-	-	-	-	-	-
C5.51	W-12		Pipe-to-Pipe	AUG	-	-	-	-	-	-	-	-	-	-	-	-
2	CRD Scram Header B			OWN	-	-	-	-	-	-	-	-	-	-	-	-
				PRE	-	-	-	-	-	-	-	-	-	-	-	-
C-F-2	101828		ISI-93268-3A	ISI	-	-	-	-	-	-	-	-	-	-	-	-
C5.51	W-13		Pipe-to-Pipe	AUG	-	-	-	-	-	-	-	-	-	-	-	-
2	CRD Scram Header B			OWN	-	-	-	-	-	-	-	-	-	-	-	-
				PRE	-	-	-	-	-	-	-	-	-	-	-	-
C-F-2	101829		ISI-93268-3A	ISI	-	-	-	-	-	-	-	-	-	-	-	-
C5.51	W-14		Pipe-to-Pipe	AUG	-	-	-	-	-	-	-	-	-	-	-	-
2	CRD Scram Header B			OWN	-	-	-	-	-	-	-	-	-	-	-	-
				PRE	-	-	-	-	-	-	-	-	-	-	-	-

MONTICELLO Nuclear Generating Plant
3rd Interval ISI Plan Rev. 3 June 1, 1992 to May 31, 2002

Category, ItemNO, Class	Summary / CompID / System	Scope / Method / Procedure	Iso No. Comp. Desc. Code Case /Note		Period 1				Period 2				Period 3			
					1	2	3	4	1	2	3	4	1	2	3	4
C-F-2	101830	ISI/PT/ISI-PT-1	ISI-93268-3A	ISI	-	-	-	-	c	-	-	-	-	-	-	-
C5.51	W-15	ISI/UT/ISI-UT-1	Pipe-to-Reducer	AUG	-	-	-	-	-	-	-	-	-	-	-	-
2	CRD Scram Header B		NOTE:CC	OWN	-	-	-	-	-	-	-	-	-	-	-	-
				PRE	-	-	-	-	-	-	-	-	-	-	-	-
C-F-1	101831		ISI-93268-3A	ISI	-	-	-	-	-	-	-	-	-	-	-	-
C5.10	W-16 LS D		Reducer-to-Tee	AUG	-	-	-	-	-	-	-	-	-	-	-	-
2	CRD Scram Header B			OWN	-	-	-	-	-	-	-	-	-	-	-	-
				PRE	-	-	-	-	-	-	-	-	-	-	-	-
C-F-1	101832		ISI-93268-3A	ISI	-	-	-	-	-	-	-	-	-	-	-	-
C5.10	W-17 LS U&D		Tee-to-Pipe	AUG	-	-	-	-	-	-	-	-	-	-	-	-
2	CRD Scram Header B			OWN	-	-	-	-	-	-	-	-	-	-	-	-
				PRE	-	-	-	-	-	-	-	-	-	-	-	-
C-F-1	101833		ISI-93268-3A	ISI	-	-	-	-	-	-	-	-	-	-	-	-
C5.10	W-18 LS U&D		Pipe-to-Tee	AUG	-	-	-	-	-	-	-	-	-	-	-	-
2	CRD Scram Header B			OWN	-	-	-	-	-	-	-	-	-	-	-	-
				PRE	-	-	-	-	-	-	-	-	-	-	-	-
C-F-1	101839		ISI-93268-3A	ISI	-	-	-	-	-	-	-	-	-	-	-	-
C5.10	W-24 LS D		Reducer-to-Reducer	AUG	-	-	-	-	-	-	-	-	-	-	-	-
2	CRD Scram Header B			OWN	-	-	-	-	-	-	-	-	-	-	-	-
				PRE	-	-	-	-	-	-	-	-	-	-	-	-
C-F-1	101840		ISI-93268-3A	ISI	-	-	-	-	-	-	-	-	-	-	-	-
C5.10	W-25 LS U&D		Tee-to-Reducer	AUG	-	-	-	-	-	-	-	-	-	-	-	-
2	CRD Scram Header B			OWN	-	-	-	-	-	-	-	-	-	-	-	-
				PRE	-	-	-	-	-	-	-	-	-	-	-	-
C-F-1	101841		ISI-93268-3A	ISI	-	-	-	-	-	-	-	-	-	-	-	-
C5.10	W-26 LS U&D		Tee-to-Elbow	AUG	-	-	-	-	-	-	-	-	-	-	-	-
2	CRD Scram Header B			OWN	-	-	-	-	-	-	-	-	-	-	-	-
				PRE	-	-	-	-	-	-	-	-	-	-	-	-
C-F-1	101842		ISI-93268-3A	ISI	-	-	-	-	-	-	-	-	-	-	-	-
C5.10	W-27 LS U&D		Elbow-to-Pipe	AUG	-	-	-	-	-	-	-	-	-	-	-	-
2	CRD Scram Header B			OWN	-	-	-	-	-	-	-	-	-	-	-	-
				PRE	-	-	-	-	-	-	-	-	-	-	-	-
C-F-1	101843		ISI-93268-3A	ISI	-	-	-	-	-	-	-	-	-	-	-	-
C5.10	W-28 LS U&D		Pipe-to-Elbow	AUG	-	-	-	-	-	-	-	-	-	-	-	-
2	CRD Scram Header B			OWN	-	-	-	-	-	-	-	-	-	-	-	-
				PRE	-	-	-	-	-	-	-	-	-	-	-	-
C-F-1	101844	ISI/PT/ISI-PT-1	ISI-93268-3A	ISI	c	-	-	-	-	-	-	-	-	-	-	-
C5.10	W-29 LS U&D	ISI/UT/ISI-UT-1	Elbow-to-Elbow	AUG	-	-	-	-	-	-	-	-	-	-	-	-
2	CRD Scram Header B			OWN	-	-	-	-	-	-	-	-	-	-	-	-
				PRE	-	-	-	-	-	-	-	-	-	-	-	-

MONTICELLO Nuclear Generating Plant
3rd Interval ISI Plan Rev. 3 June 1, 1992 to May 31, 2002

Category, ItemNO, Class	Summary / CompID / System	Scope / Method / Procedure	Iso No. Comp. Desc. Code Case /Note		Period 1				Period 2				Period 3			
					1	2	3	4	1	2	3	4	1	2	3	4
C-F-1	101845		ISI-93268-3A	ISI	-	-	-	-	-	-	-	-	-	-	-	-
C5.10	W-30 LS U&D		Elbow-to-Reducer	AUG	-	-	-	-	-	-	-	-	-	-	-	-
2	CRD Scram Header B			OWN	-	-	-	-	-	-	-	-	-	-	-	-
				PRE	-	-	-	-	-	-	-	-	-	-	-	-
C-F-1	101846		ISI-93268-3A	ISI	-	-	-	-	-	-	-	-	-	-	-	-
C5.10	W-31 LS U&D		Reducer-to-Pipe	AUG	-	-	-	-	-	-	-	-	-	-	-	-
2	CRD Scram Header B			OWN	-	-	-	-	-	-	-	-	-	-	-	-
				PRE	-	-	-	-	-	-	-	-	-	-	-	-
C-F-1	101847	ISI/PT/ISI-PT-1	ISI-93268-3A	ISI	-	-	-	-	c	-	-	-	-	-	-	-
C5.10	W-32 LS U	ISI/UT/ISI-UT-16	Pipe-to-Cap	AUG	-	-	-	-	-	-	-	-	-	-	-	-
2	CRD Scram Header B			OWN	-	-	-	-	-	-	-	-	-	-	-	-
				PRE	-	-	-	-	-	-	-	-	-	-	-	-
B-G-2	101848		ISI-97003-A	ISI	-	-	-	-	-	-	-	-	-	-	-	-
B7.70	B- 1		Valve Bolts	AUG	-	-	-	-	-	-	-	-	-	-	-	-
1	RHR Return A			OWN	-	-	-	-	-	-	-	-	-	-	-	-
				PRE	-	-	-	-	-	-	-	-	-	-	-	-
B-G-2	101849	ISI/VT/ISI-VT-1.0	ISI-97003-A	ISI	-	-	-	-	-	c	-	-	-	-	-	-
B7.70	B- 2		Valve Bolts	AUG	-	-	-	-	-	-	-	-	-	-	-	-
1	RHR Return A			OWN	-	-	-	-	-	-	-	-	-	-	-	-
				PRE	-	-	-	-	-	-	-	-	-	-	-	-
B-G-2	101850	ISI/VT/ISI-VT-1.0	ISI-97003-A	ISI	-	-	-	-	-	c	-	-	-	-	-	-
B7.50	B- 3		Flange Bolts @ W 11	AUG	-	-	-	-	-	-	-	-	-	-	-	-
1	RHR Return A			OWN	-	-	-	-	-	-	-	-	-	-	-	-
				PRE	-	-	-	-	-	-	-	-	-	-	-	-
B-G-2	101851	ISI/VT/ISI-VT-1.0	ISI-97003-A	ISI	-	-	-	-	-	-	-	-	s	-	-	-
B7.50	B- 4		Flange Bolts @ W 22	AUG	-	-	-	-	-	-	-	-	-	-	-	-
1	RHR Return A			OWN	-	-	-	-	-	-	-	-	-	-	-	-
				PRE	-	-	-	-	-	-	-	-	-	-	-	-
B-G-2	101852	ISI/VT/ISI-VT-1.0	ISI-97003-A	ISI	-	-	-	-	-	-	-	-	s	-	-	-
B7.70	B- 5		Valve Bolts	AUG	-	-	-	-	-	-	-	-	-	-	-	-
1	RHR Return A			OWN	-	-	-	-	-	-	-	-	-	-	-	-
				PRE	-	-	-	-	-	-	-	-	-	-	-	-
F-C	101853	ISI/VT/ISI-VT-2.0	ISI-97003-A	ISI	-	-	-	-	-	c	-	-	-	-	-	-
F-A,B,C	H- 1		Variable Spring	AUG	-	-	-	-	-	-	-	-	-	-	-	-
1	RHR Return A			OWN	-	-	-	-	-	-	-	-	-	-	-	-
				PRE	-	-	-	-	-	-	-	-	-	-	-	-
F-C	101854	ISI/VT/ISI-VT-2.0	ISI-97003-A	ISI	-	-	-	-	-	c	-	-	-	-	-	-
F-A,B,C	H- 2		Variable Spring	AUG	-	-	-	-	-	-	-	-	-	-	-	-
1	RHR Return A			OWN	-	-	-	-	-	-	-	-	-	-	-	-
				PRE	-	-	-	-	-	-	-	-	-	-	-	-

MONTICELLO Nuclear Generating Plant
3rd Interval ISI Plan Rev. 3 June 1, 1992 to May 31, 2002

Category, ItemNO, Class	Summary / CompID / System	Scope / Method / Procedure	Iso No. Comp. Desc. Code Case /Note		Period 1				Period 2				Period 3			
					1	2	3	4	1	2	3	4	1	2	3	4
F-B	101855	ISI/VT/ISI-VT-2.0	ISI-97003-A	ISI	c	B	-	-	-	B	-	-	b	-	-	-
F-A,B,C	H- 3		Snubber / Clamp	AUG	-	-	-	-	-	-	-	-	-	-	-	-
1	RHR Return A			OWN	-	-	-	-	-	-	-	-	-	-	-	-
				PRE	-	-	-	-	-	-	-	-	-	-	-	-
F-B	101856	ISI/VT/ISI-VT-2.0	ISI-97003-A	ISI	-	-	-	-	-	c	-	-	b	-	-	-
F-A,B,C	H- 4		Snubber / Clamp	AUG	-	-	-	-	-	-	-	-	-	-	-	-
1	RHR Return A			OWN	-	-	-	-	-	-	-	-	-	-	-	-
				PRE	-	-	-	-	-	-	-	-	-	-	-	-
B-M-2	101857		ISI-97003-A	ISI	-	-	-	-	-	-	-	-	-	-	-	-
B12.50	V- 1		Valve Int Surfaces	AUG	-	-	-	-	-	-	-	-	-	-	-	-
1	RHR Return A		NOTE: HH, RELIEF 4	OWN	-	-	-	-	-	-	-	-	-	-	-	-
				PRE	-	-	-	-	-	-	-	-	-	-	-	-
B-M-2	101858	ISI/VT/ISI-VT-3.0	ISI-97003-A	ISI	-	-	-	-	-	c	-	-	-	-	-	-
B12.50	V- 2		Valve Int Surfaces	AUG	-	-	-	-	-	-	-	-	-	-	-	-
1	RHR Return A		NOTE: HH, RELIEF 4	OWN	-	-	-	-	-	-	-	-	-	-	-	-
				PRE	-	-	-	-	-	-	-	-	-	-	-	-
B-M-2	101859		ISI-97003-A	ISI	-	-	-	-	-	-	-	-	-	-	-	-
B12.50	V- 3		Valve Int Surfaces	AUG	-	-	-	-	-	-	-	-	-	-	-	-
1	RHR Return A		NOTE: HH, RELIEF 4	OWN	-	-	-	-	-	-	-	-	-	-	-	-
				PRE	-	-	-	-	-	-	-	-	-	-	-	-
B-J	101860	ISI/MT/ISI-MT-1	ISI-97003-A	ISI	-	c	-	-	-	-	-	-	-	-	-	-
B9.11	W- 1	ISI/UT/ISI-UT-1	Valve-to-Pipe	AUG	-	-	-	-	-	-	-	-	-	-	-	-
1	RHR Return A		NOTE: MM	OWN	-	-	-	-	-	-	-	-	-	-	-	-
				PRE	-	-	-	-	-	-	-	-	-	-	-	-
B-J	101861	ISI/MT/ISI-MT-1	ISI-97003-A	ISI	-	-	-	-	-	-	-	-	s	-	-	-
B9.11	W- 2	ISI/UT/ISI-UT-1	Pipe-to-Pipe	AUG	-	-	-	-	-	-	-	-	-	-	-	-
1	RHR Return A			OWN	-	-	-	-	-	-	-	-	-	-	-	-
				PRE	-	-	-	-	-	-	-	-	-	-	-	-
B-J	101862		ISI-97003-A	ISI	-	-	-	-	-	-	-	-	-	-	-	-
B9.11	W- 3		Pipe-to-Pipe	AUG	-	-	-	-	-	-	-	-	-	-	-	-
1	RHR Return A		NOTE:DD	OWN	-	-	-	-	-	-	-	-	-	-	-	-
				PRE	-	-	-	-	-	-	-	-	-	-	-	-
B-J	101863	ISI/MT/ISI-MT-1	ISI-97003-A	ISI	c	-	-	-	-	-	-	-	-	-	-	-
B9.11	W- 4	ISI/UT/ISI-UT-1	Pipe-to-Elbow	AUG	-	-	-	-	-	-	-	-	-	-	-	-
1	RHR Return A			OWN	-	-	-	-	-	-	-	-	-	-	-	-
				PRE	-	-	-	-	-	-	-	-	-	-	-	-
B-J	101864		ISI-97003-A	ISI	-	-	-	-	-	-	-	-	-	-	-	-
B9.11	W- 5		Elbow-to-Pipe	AUG	-	-	-	-	-	-	-	-	-	-	-	-
1	RHR Return A			OWN	-	-	-	-	-	-	-	-	-	-	-	-
				PRE	-	-	-	-	-	-	-	-	-	-	-	-

MONTICELLO Nuclear Generating Plant
3rd Interval ISI Plan Rev. 3 June 1, 1992 to May 31, 2002

Category, ItemNO, Class	Summary / CompID / System	Scope / Method / Procedure	Iso No. Comp. Desc. Code Case /Note		Period 1				Period 2				Period 3			
					1	2	3	4	1	2	3	4	1	2	3	4
B-J	101865		ISI-97003-A	ISI	-	-	-	-	-	-	-	-	-	-	-	-
B9.11	W- 6		Pipe-to-Elbow	AUG	-	-	-	-	-	-	-	-	-	-	-	-
1	RHR Return A			OWN	-	-	-	-	-	-	-	-	-	-	-	-
				PRE	-	-	-	-	-	-	-	-	-	-	-	-
B-J	101866		ISI-97003-A	ISI	-	-	-	-	-	-	-	-	-	-	-	-
B9.11	W- 7		Elbow-to-Pipe	AUG	-	-	-	-	-	-	-	-	-	-	-	-
1	RHR Return A			OWN	-	-	-	-	-	-	-	-	-	-	-	-
				PRE	-	-	-	-	-	-	-	-	-	-	-	-
B-J	101867	ISI/PT/ISI-PT-1	ISI-97003-A	ISI	-	-	-	-	-	C	-	-	-	-	-	-
B9.11	W- 8	ISI/UT/ISI-UT-16	Pipe-to-Valve	AUG	-	-	-	-	-	-	-	-	-	-	-	-
1	RHR Return A		NOTE:CC	OWN	-	-	-	-	-	-	-	-	-	-	-	-
				PRE	-	-	-	-	-	-	-	-	-	-	-	-
B-J	101868	ISI/PT/ISI-PT-1	ISI-97003-A	ISI	-	-	-	-	-	C	-	-	-	-	-	-
B9.11	W- 9	ISI/UT/ISI-UT-16	Valve-to-Pipe	AUG	-	-	-	-	-	-	-	-	-	-	-	-
1	RHR Return A		NOTE:CC	OWN	-	-	-	-	-	-	-	-	-	-	-	-
				PRE	-	-	-	-	-	-	-	-	-	-	-	-
B-J	101869	ISI/MT/ISI-MT-1	ISI-97003-A	ISI	-	-	-	-	-	C	-	-	-	-	-	-
B9.31	W-10	ISI/UT/ISI-UT-1	Pipe-to-Weldolet	AUG	-	-	-	-	-	-	-	-	-	-	-	-
1	RHR Return A			OWN	-	-	-	-	-	-	-	-	-	-	-	-
				PRE	-	-	-	-	-	-	-	-	-	-	-	-
B-J	101870	ISI/MT/ISI-MT-1	ISI-97003-A	ISI	-	-	-	-	-	C	-	-	-	-	-	-
B9.11	W-11	ISI/UT/ISI-UT-1	Weldolet-to-Flange	AUG	-	-	-	-	-	-	-	-	-	-	-	-
1	RHR Return A			OWN	-	-	-	-	-	-	-	-	-	-	-	-
				PRE	-	-	-	-	-	-	-	-	-	-	-	-
B-J	101871		ISI-97003-A	ISI	-	-	-	-	-	-	-	-	-	-	-	-
B9.11	W-12		Pipe-to-Elbow	AUG	-	-	-	-	-	-	-	-	-	-	-	-
1	RHR Return A			OWN	-	-	-	-	-	-	-	-	-	-	-	-
				PRE	-	-	-	-	-	-	-	-	-	-	-	-
B-J	101872		ISI-97003-A	ISI	-	-	-	-	-	-	-	-	-	-	-	-
B9.11	W-13		Elbow-to-Pipe	AUG	-	-	-	-	-	-	-	-	-	-	-	-
1	RHR Return A			OWN	-	-	-	-	-	-	-	-	-	-	-	-
				PRE	-	-	-	-	-	-	-	-	-	-	-	-
B-J	101873		ISI-97003-A	ISI	-	-	-	-	-	-	-	-	-	-	-	-
B9.31	W-14		Pipe-to-Branch	AUG	-	-	-	-	-	-	-	-	-	-	-	-
1	RHR Return A			OWN	-	-	-	-	-	-	-	-	-	-	-	-
				PRE	-	-	-	-	-	-	-	-	-	-	-	-
B-J	101874		ISI-97003-A	ISI	-	-	-	-	-	-	-	-	-	-	-	-
B9.11	W-15		Pipe-to-Elbow	AUG	-	-	-	-	-	-	-	-	-	-	-	-
1	RHR Return A			OWN	-	-	-	-	-	-	-	-	-	-	-	-
				PRE	-	-	-	-	-	-	-	-	-	-	-	-

MONTICELLO Nuclear Generating Plant
3rd Interval ISI Plan Rev. 3 June 1, 1992 to May 31, 2002

Category, ItemNO, Class	Summary / CompID / System	Scope / Method / Procedure	Iso No. Comp. Desc. Code Case /Note		Period 1				Period 2				Period 3			
					1	2	3	4	1	2	3	4	1	2	3	4
B-J	101875		ISI-97003-A	ISI	-	-	-	-	-	-	-	-	-	-	-	-
B9.11	W-16		Elbow-to-Pipe	AUG	-	-	-	-	-	-	-	-	-	-	-	-
1	RHR Return A			OWN	-	-	-	-	-	-	-	-	-	-	-	-
				PRE	-	-	-	-	-	-	-	-	-	-	-	-
B-J	101876		ISI-97003-A	ISI	-	-	-	-	-	-	-	-	-	-	-	-
B9.11	W-17		Pipe-to-Elbow	AUG	-	-	-	-	-	-	-	-	-	-	-	-
1	RHR Return A			OWN	-	-	-	-	-	-	-	-	-	-	-	-
				PRE	-	-	-	-	-	-	-	-	-	-	-	-
B-J	101877		ISI-97003-A	ISI	-	-	-	-	-	-	-	-	-	-	-	-
B9.11	W-18		Elbow-to-Pipe	AUG	-	-	-	-	-	-	-	-	-	-	-	-
1	RHR Return A			OWN	-	-	-	-	-	-	-	-	-	-	-	-
				PRE	-	-	-	-	-	-	-	-	-	-	-	-
B-J	101878		ISI-97003-A	ISI	-	-	-	-	-	-	-	-	-	-	-	-
B9.11	W-19		Pipe-to-Elbow	AUG	-	-	-	-	-	-	-	-	-	-	-	-
1	RHR Return A			OWN	-	-	-	-	-	-	-	-	-	-	-	-
				PRE	-	-	-	-	-	-	-	-	-	-	-	-
B-J	101879		ISI-97003-A	ISI	-	-	-	-	-	-	-	-	-	-	-	-
B9.11	W-20		Elbow-to-Pipe	AUG	-	-	-	-	-	-	-	-	-	-	-	-
1	RHR Return A			OWN	-	-	-	-	-	-	-	-	-	-	-	-
				PRE	-	-	-	-	-	-	-	-	-	-	-	-
B-J	101880		ISI-97003-A	ISI	-	-	-	-	-	-	-	-	-	-	-	-
B9.31	W-21		Pipe-to-Branch	AUG	-	-	-	-	-	-	-	-	-	-	-	-
1	RHR Return A			OWN	-	-	-	-	-	-	-	-	-	-	-	-
				PRE	-	-	-	-	-	-	-	-	-	-	-	-
B-J	101881		ISI-97003-A	ISI	-	-	-	-	-	-	-	-	-	-	-	-
B9.11	W-22		Branch-to-Flange	AUG	-	-	-	-	-	-	-	-	-	-	-	-
1	RHR Return A			OWN	-	-	-	-	-	-	-	-	-	-	-	-
				PRE	-	-	-	-	-	-	-	-	-	-	-	-
B-J	101882		ISI-97003-A	ISI	-	-	-	-	-	-	-	-	-	-	-	-
B9.11	W-23		Pipe-to-Valve	AUG	-	-	-	-	-	-	-	-	-	-	-	-
1	RHR Return A			OWN	-	-	-	-	-	-	-	-	-	-	-	-
				PRE	-	-	-	-	-	-	-	-	-	-	-	-
B-J	101883		ISI-97003-A	ISI	-	-	-	-	-	-	-	-	-	-	-	-
B9.11	W-24		Valve-to-Pipe	AUG	-	-	-	-	-	-	-	-	-	-	-	-
1	RHR Return A			OWN	-	-	-	-	-	-	-	-	-	-	-	-
				PRE	-	-	-	-	-	-	-	-	-	-	-	-
B-J	101884	ISI/PT/ISI-PT-1	ISI-97003-A	ISI	-	-	-	-	-	c	-	-	b	-	-	-
B9.10	W-25 LS D	ISI/UT/ISI-UT-16	Pipe-to-Pipe	AUG	-	-	-	-	-	-	-	-	-	-	-	-
1	RHR Return A			OWN	-	-	-	-	-	-	-	-	-	-	-	-
				PRE	-	-	-	-	-	-	-	-	-	-	-	-

MONTICELLO Nuclear Generating Plant
3rd Interval ISI Plan Rev. 3 June 1, 1992 to May 31, 2002

Category, ItemNO, Class	Summary / CompID / System	Scope / Method / Procedure	Iso No. Comp. Desc. Code Case /Note		Period 1				Period 2				Period 3			
					1	2	3	4	1	2	3	4	1	2	3	4
B-J	101885		ISI-97003-A	ISI	-	-	-	-	-	-	-	-	-	-	-	-
B9.10	W-26 LS U&D		Pipe-to-Reducer	AUG	-	-	-	-	-	-	-	-	-	-	-	-
1	RHR Return A			OWN	-	-	-	-	-	-	-	-	-	-	-	-
				PRE	-	-	-	-	-	-	-	-	-	-	-	-
B-J	101886		ISI-97003-A	ISI	-	-	-	-	-	-	-	-	-	-	-	-
B9.10	W-27 LS U&D		Reducer-to-Pipe	AUG	-	-	-	-	-	-	-	-	-	-	-	-
1	RHR Return A			OWN	-	-	-	-	-	-	-	-	-	-	-	-
				PRE	-	-	-	-	-	-	-	-	-	-	-	-
B-J	101887		ISI-97003-A	ISI	-	-	-	-	-	-	-	-	-	-	-	-
B9.10	W-28 LS U&D		Pipe-to-Elbow	AUG	-	-	-	-	-	-	-	-	-	-	-	-
1	RHR Return A			OWN	-	-	-	-	-	-	-	-	-	-	-	-
				PRE	-	-	-	-	-	-	-	-	-	-	-	-
B-J	101888	ISI/PT/ISI-PT-1	ISI-97003-A	ISI	-	-	-	-	-	-	-	-	s	-	-	-
B9.10	W-29 LS U&D	ISI/UT/ISI-UT-16	Elbow-to-Pipe	AUG	-	-	-	-	-	-	-	-	-	-	-	-
1	RHR Return A			OWN	-	-	-	-	-	-	-	-	-	-	-	-
				PRE	-	-	-	-	-	-	-	-	-	-	-	-
B-J	101889		ISI-97003-A	ISI	-	-	-	-	-	-	-	-	-	-	-	-
B9.10	W-30 LS U&D		Pipe-to-Tee	AUG	-	-	-	-	-	-	-	-	-	-	-	-
1	RHR Return A			OWN	-	-	-	-	-	-	-	-	-	-	-	-
				PRE	-	-	-	-	-	-	-	-	-	-	-	-
B-G-2	101890	ISI/VT/ISI-VT-1.0	ISI-97003-B	ISI	-	-	-	-	-	c	-	-	-	-	-	-
B7.70	B- 1		Valve Bolts	AUG	-	-	-	-	-	-	-	-	-	-	-	-
1	RHR Suction A			OWN	-	-	-	-	-	-	-	-	-	-	-	-
				PRE	-	-	-	-	-	-	-	-	-	-	-	-
B-G-2	101891	ISI/VT/ISI-VT-1.0	ISI-97003-B	ISI	-	-	-	-	-	c	-	-	-	-	-	-
B7.50	B- 2		Flange Bolts @ W-9	AUG	-	-	-	-	-	-	-	-	-	-	-	-
1	RHR Suction A			OWN	-	-	-	-	-	-	-	-	-	-	-	-
				PRE	-	-	-	-	-	-	-	-	-	-	-	-
B-G-2	101892	ISI/VT/ISI-VT-1.0	ISI-97003-B	ISI	-	-	-	-	-	-	-	-	-	s	-	-
B7.50	B- 3		Flange Bolts @ W-14	AUG	-	-	-	-	-	-	-	-	-	-	-	-
1	RHR Suction A			OWN	-	-	-	-	-	-	-	-	-	-	-	-
				PRE	-	-	-	-	-	-	-	-	-	-	-	-
B-G-2	101893	ISI/VT/ISI-VT-1.0	ISI-97003-B	ISI	c	-	-	-	-	-	-	-	-	-	-	-
B7.70	B- 4		Valve Bolts	AUG	-	-	-	-	-	-	-	-	-	-	-	-
1	RHR Suction A			OWN	-	-	-	-	-	-	-	-	-	-	-	-
				PRE	-	-	-	-	-	-	-	-	-	-	-	-
B-G-2	101894	ISI/VT/ISI-VT-1.0	ISI-97003-B	ISI	-	-	-	-	-	-	-	-	-	s	-	-
B7.70	B- 5		Valve Bolts	AUG	-	-	-	-	-	-	-	-	-	-	-	-
1	RHR Suction A			OWN	-	-	-	-	-	-	-	-	-	-	-	-
				PRE	-	-	-	-	-	-	-	-	-	-	-	-

MONTICELLO Nuclear Generating Plant
3rd Interval ISI Plan Rev. 3 June 1, 1992 to May 31, 2002

Category, ItemNO, Class	Summary / CompID / System	Scope / Method / Procedure	Iso No. Comp. Desc. Code Case /Note		Period 1				Period 2				Period 3			
					1	2	3	4	1	2	3	4	1	2	3	4
F-C	101895	ISI/VT/ISI-VT-2.0	ISI-97003-B	ISI	-	-	-	-	-	c	-	-	-	-	-	-
F-A,B,C	H- 1		Variable Spr / Clamp	AUG	-	-	-	-	-	-	-	-	-	-	-	-
1	RHR Suction A			OWN	-	-	-	-	-	-	-	-	-	-	-	-
				PRE	-	-	-	-	-	-	-	-	-	-	-	-
F-B	101896		ISI-97003-B	ISI	-	c	-	-	-	B	-	-	b	-	-	-
F-A,B,C	H- 2	ISI/VT/ISI-VT-2.0	Snubber / Clamp	AUG	-	-	-	-	-	-	-	-	-	-	-	-
1	RHR Suction A			OWN	-	-	-	-	-	-	-	-	-	-	-	-
				PRE	-	-	-	-	-	-	-	-	-	-	-	-
F-B	101897		ISI-97003-B	ISI	-	-	-	-	-	c	-	-	b	-	-	-
F-A,B,C	H- 3	ISI/VT/ISI-VT-2.0	Snubber / Clamp	AUG	-	-	-	-	-	-	-	-	-	-	-	-
1	RHR Suction A			OWN	-	-	-	-	-	-	-	-	-	-	-	-
				PRE	-	-	-	-	-	-	-	-	-	-	-	-
F-C	101898	ISI/VT/ISI-VT-2.0	ISI-97003-B	ISI	-	-	-	-	-	-	-	-	-	s	-	-
F-A,B,C	H- 4		Variable Slide/Clamp	AUG	-	-	-	-	-	-	-	-	-	-	-	-
1	RHR Suction A			OWN	-	-	-	-	-	-	-	-	-	-	-	-
				PRE	-	-	-	-	-	-	-	-	-	-	-	-
F-C	101899	ISI/VT/ISI-VT-2.0	ISI-97003-B	ISI	-	-	-	-	-	-	-	-	-	s	-	-
F-A,B,C	H- 5		Variable Slide	AUG	-	-	-	-	-	-	-	-	-	-	-	-
1	RHR Suction A			OWN	-	-	-	-	-	-	-	-	-	-	-	-
				PRE	-	-	-	-	-	-	-	-	-	-	-	-
B-M-2	101900		ISI-97003-B	ISI	-	-	-	-	-	-	-	-	-	-	-	-
B12.50	V- 1		Valve Int Surfaces	AUG	-	-	-	-	-	-	-	-	-	-	-	-
1	RHR Suction A		NOTE: HH, RELIEF 4	OWN	-	-	-	-	-	-	-	-	-	-	-	-
				PRE	-	-	-	-	-	-	-	-	-	-	-	-
B-M-2	101901		ISI-97003-B	ISI	-	-	-	-	-	-	-	-	-	-	-	-
B12.50	V- 2		Valve Int Surfaces	AUG	-	-	-	-	-	-	-	-	-	-	-	-
1	RHR Suction A		NOTE: HH, RELIEF 4	OWN	-	-	-	-	-	-	-	-	-	-	-	-
				PRE	-	-	-	-	-	-	-	-	-	-	-	-
B-M-2	101902		ISI-97003-B	ISI	-	-	-	-	-	-	-	-	-	-	-	-
B12.50	V- 3		Valve Int Surfaces	AUG	-	-	-	-	-	-	-	-	-	-	-	-
1	RHR Suction A		NOTE: HH, RELIEF 4	OWN	-	-	-	-	-	-	-	-	-	-	-	-
				PRE	-	-	-	-	-	-	-	-	-	-	-	-
B-J	101903		ISI-97003-B	ISI	-	-	-	-	-	-	-	-	-	-	-	-
B9.10	W- 1 LS U&D		Tee-to-Pipe	AUG	-	-	-	-	-	-	-	-	-	-	-	-
1	RHR Suction A			OWN	-	-	-	-	-	-	-	-	-	-	-	-
				PRE	-	-	-	-	-	-	-	-	-	-	-	-
B-J	101904		ISI-97003-B	ISI	-	-	-	-	-	-	-	-	-	-	-	-
B9.10	W- 2 LS U&D		Pipe-to-Elbow	AUG	-	-	-	-	-	-	-	-	-	-	-	-
1	RHR Suction A			OWN	-	-	-	-	-	-	-	-	-	-	-	-
				PRE	-	-	-	-	-	-	-	-	-	-	-	-

MONTICELLO Nuclear Generating Plant
3rd Interval ISI Plan Rev. 3 June 1, 1992 to May 31, 2002

Category, ItemNO, Class	Summary / CompID / System	Scope / Method / Procedure	Iso No. Comp. Desc. Code Case /Note		Period 1				Period 2				Period 3			
					1	2	3	4	1	2	3	4	1	2	3	4
B-J	101905		ISI-97003-B	ISI	-	-	-	-	-	-	-	-	-	-	-	-
B9.10	W- 3 LS U&D		Elbow-to-Pipe	AUG	-	-	-	-	-	-	-	-	-	-	-	-
1	RHR Suction A			OWN	-	-	-	-	-	-	-	-	-	-	-	-
				PRE	-	-	-	-	-	-	-	-	-	-	-	-
B-J	101906	ISI/PT/ISI-PT-1	ISI-97003-B	ISI	-	-	-	-	-	c	-	-	-	-	-	-
B9.10	W- 4 LS U	ISI/UT/ISI-UT-16	Pipe-to-Pipe	AUG	-	-	-	-	-	-	-	-	-	-	-	-
1	RHR Suction A		NOTE:CC	OWN	-	-	-	-	-	-	-	-	-	-	-	-
				PRE	-	-	-	-	-	-	-	-	-	-	-	-
B-J	101907		ISI-97003-B	ISI	-	-	-	-	-	-	-	-	-	-	-	-
B9.11	W- 5		Pipe-to-Valve	AUG	-	-	-	-	-	-	-	-	-	-	-	-
1	RHR Suction A			OWN	-	-	-	-	-	-	-	-	-	-	-	-
				PRE	-	-	-	-	-	-	-	-	-	-	-	-
B-J	101908		ISI-97003-B	ISI	-	-	-	-	-	-	-	-	-	-	-	-
B9.11	W- 6		Valve-to-Elbow	AUG	-	-	-	-	-	-	-	-	-	-	-	-
1	RHR Suction A			OWN	-	-	-	-	-	-	-	-	-	-	-	-
				PRE	-	-	-	-	-	-	-	-	-	-	-	-
B-J	101909		ISI-97003-B	ISI	-	-	-	-	-	-	-	-	-	-	-	-
B9.11	W- 7		Elbow-to-Pipe	AUG	-	-	-	-	-	-	-	-	-	-	-	-
1	RHR Suction A			OWN	-	-	-	-	-	-	-	-	-	-	-	-
				PRE	-	-	-	-	-	-	-	-	-	-	-	-
B-J	101910		ISI-97003-B	ISI	-	-	-	-	-	-	-	-	-	-	-	-
B9.31	W- 8		Pipe-to-Branch	AUG	-	-	-	-	-	-	-	-	-	-	-	-
1	RHR Suction A			OWN	-	-	-	-	-	-	-	-	-	-	-	-
				PRE	-	-	-	-	-	-	-	-	-	-	-	-
B-J	101911		ISI-97003-B	ISI	-	-	-	-	-	-	-	-	-	-	-	-
B9.11	W- 9		Branch-to-Flange	AUG	-	-	-	-	-	-	-	-	-	-	-	-
1	RHR Suction A			OWN	-	-	-	-	-	-	-	-	-	-	-	-
				PRE	-	-	-	-	-	-	-	-	-	-	-	-
B-J	101912		ISI-97003-B	ISI	-	-	-	-	-	-	-	-	-	-	-	-
B9.11	W-10		Pipe-to-Elbow	AUG	-	-	-	-	-	-	-	-	-	-	-	-
1	RHR Suction A			OWN	-	-	-	-	-	-	-	-	-	-	-	-
				PRE	-	-	-	-	-	-	-	-	-	-	-	-
B-J	101913		ISI-97003-B	ISI	-	-	-	-	-	-	-	-	-	-	-	-
B9.11	W-11		Elbow-to-Pipe	AUG	-	-	-	-	-	-	-	-	-	-	-	-
1	RHR Suction A			OWN	-	-	-	-	-	-	-	-	-	-	-	-
				PRE	-	-	-	-	-	-	-	-	-	-	-	-
B-J	101914	ISI/MT/ISI-MT-1	ISI-97003-B	ISI	c	-	-	-	-	-	-	-	-	-	-	-
B9.31	W-12	ISI/UT/ISI-UT-1	Branch-to-Pipe	AUG	-	-	-	-	-	-	-	-	-	-	-	-
1	RHR Suction A			OWN	-	-	-	-	-	-	-	-	-	-	-	-
				PRE	-	-	-	-	-	-	-	-	-	-	-	-

MONTICELLO Nuclear Generating Plant
3rd Interval ISI Plan Rev. 3 June 1, 1992 to May 31, 2002

Category, ItemNO, Class	Summary / CompID / System	Scope / Method / Procedure	Iso No. Comp. Desc. Code Case /Note		Period 1				Period 2				Period 3			
					1	2	3	4	1	2	3	4	1	2	3	4
B-J	101915		ISI-97003-B	ISI	-	-	-	-	-	-	-	-	-	-	-	-
B9.31	W-13		Pipe-to-Branch	AUG	-	-	-	-	-	-	-	-	-	-	-	-
1	RHR Suction A			OWN	-	-	-	-	-	-	-	-	-	-	-	-
				PRE	-	-	-	-	-	-	-	-	-	-	-	-
B-J	101916		ISI-97003-B	ISI	-	-	-	-	-	-	-	-	-	-	-	-
B9.11	W-14		Branch-to-Flange	AUG	-	-	-	-	-	-	-	-	-	-	-	-
1	RHR Suction A			OWN	-	-	-	-	-	-	-	-	-	-	-	-
				PRE	-	-	-	-	-	-	-	-	-	-	-	-
B-J	101917		ISI-97003-B	ISI	-	-	-	-	-	-	-	-	-	-	-	-
B9.11	W-15		Pipe-to-Pipe	AUG	-	-	-	-	-	-	-	-	-	-	-	-
1	RHR Suction A			OWN	-	-	-	-	-	-	-	-	-	-	-	-
				PRE	-	-	-	-	-	-	-	-	-	-	-	-
B-J	101918		ISI-97003-B	ISI	-	-	-	-	-	-	-	-	-	-	-	-
B9.11	W-16		Pipe-to-Valve	AUG	-	-	-	-	-	-	-	-	-	-	-	-
1	RHR Suction A			OWN	-	-	-	-	-	-	-	-	-	-	-	-
				PRE	-	-	-	-	-	-	-	-	-	-	-	-
B-J	101919	ISI/MT/ISI-MT-1	ISI-97003-B	ISI	c	-	-	-	-	-	-	-	-	-	-	-
B9.11	W-17	ISI/UT/ISI-UT-1	Valve-to-Elbow	AUG	-	-	-	-	-	-	-	-	-	-	-	-
1	RHR Suction A			OWN	-	-	-	-	-	-	-	-	-	-	-	-
				PRE	-	-	-	-	-	-	-	-	-	-	-	-
B-J	101920	ISI/MT/ISI-MT-1	ISI-97003-B	ISI	c	-	-	-	-	-	-	-	-	-	-	-
B9.11	W-18	ISI/UT/ISI-UT-1	Elbow-to-Pipe	AUG	-	-	-	-	-	-	-	-	-	-	-	-
1	RHR Suction A			OWN	-	-	-	-	-	-	-	-	-	-	-	-
				PRE	-	-	-	-	-	-	-	-	-	-	-	-
B-J	101921		ISI-97003-B	ISI	-	-	-	-	-	-	-	-	-	-	-	-
B9.11	W-19		Pipe-to-Elbow	AUG	-	-	-	-	-	-	-	-	-	-	-	-
1	RHR Suction A			OWN	-	-	-	-	-	-	-	-	-	-	-	-
				PRE	-	-	-	-	-	-	-	-	-	-	-	-
B-J	101922		ISI-97003-B	ISI	-	-	-	-	-	-	-	-	-	-	-	-
B9.11	W-20		Elbow-to-Pipe	AUG	-	-	-	-	-	-	-	-	-	-	-	-
1	RHR Suction A			OWN	-	-	-	-	-	-	-	-	-	-	-	-
				PRE	-	-	-	-	-	-	-	-	-	-	-	-
B-J	101923	ISI/MT/ISI-MT-1	ISI-97003-B	ISI	-	c	-	-	-	-	-	-	-	-	-	-
B9.11	W-21	ISI/UT/ISI-UT-1	Pipe-to-Elbow	AUG	-	-	-	-	-	-	-	-	-	-	-	-
1	RHR Suction A			OWN	-	-	-	-	-	-	-	-	-	-	-	-
				PRE	-	-	-	-	-	-	-	-	-	-	-	-
B-J	101924	ISI/MT/ISI-MT-1	ISI-97003-B	ISI	-	c	-	-	-	-	-	-	-	-	-	-
B9.11	W-22	ISI/UT/ISI-UT-1	Elbow-to-Pipe	AUG	-	-	-	-	-	-	-	-	-	-	-	-
1	RHR Suction A			OWN	-	-	-	-	-	-	-	-	-	-	-	-
				PRE	-	-	-	-	-	-	-	-	-	-	-	-

MONTICELLO Nuclear Generating Plant
3rd Interval ISI Plan Rev. 3 June 1, 1992 to May 31, 2002

Category, ItemNO, Class	Summary / CompID / System	Scope / Method / Procedure	Iso No. Comp. Desc. Code Case /Note		Period 1				Period 2				Period 3			
					1	2	3	4	1	2	3	4	1	2	3	4
B-J	101925		ISI-97003-B	ISI	-	-	-	-	-	-	-	-	-	-	-	-
B9.11	W-23		Pipe-to-Pipe	AUG	-	-	-	-	-	-	-	-	-	-	-	-
1	RHR Suction A		NOTE:DD	OWN	-	-	-	-	-	-	-	-	-	-	-	-
				PRE	-	-	-	-	-	-	-	-	-	-	-	-
B-J	101926	ISI/MT/ISI-MT-1	ISI-97003-B	ISI	-	-	-	-	-	-	-	-	-	s	-	-
B9.11	W-24	ISI/UT/ISI-UT-1	Pipe-to-Pipe	AUG	-	-	-	-	-	-	-	-	-	-	-	-
1	RHR Suction A			OWN	-	-	-	-	-	-	-	-	-	-	-	-
				PRE	-	-	-	-	-	-	-	-	-	-	-	-
B-J	101927		ISI-97003-B	ISI	-	-	-	-	-	-	-	-	-	-	-	-
B9.11	W-25		Pipe-to-Valve	AUG	-	-	-	-	-	-	-	-	-	-	-	-
1	RHR Suction A			OWN	-	-	-	-	-	-	-	-	-	-	-	-
				PRE	-	-	-	-	-	-	-	-	-	-	-	-
B-G-2	101928	ISI/VT/ISI-VT-1.0	ISI-97004-A	ISI	-	-	-	-	-	-	-	-	s	-	-	-
B7.70	B- 1		Valve Bolts	AUG	-	-	-	-	-	-	-	-	-	-	-	-
1	RHR Return B			OWN	-	-	-	-	-	-	-	-	-	-	-	-
				PRE	-	-	-	-	-	-	-	-	-	-	-	-
B-G-2	101929	ISI/VT/ISI-VT-1.0	ISI-97004-A	ISI	-	-	-	-	-	c	-	-	-	-	-	-
B7.70	B- 2		Valve Bolts	AUG	-	-	-	-	-	-	-	-	-	-	-	-
1	RHR Return B			OWN	-	-	-	-	-	-	-	-	-	-	-	-
				PRE	-	-	-	-	-	-	-	-	-	-	-	-
B-G-2	101930	ISI/VT/ISI-VT-1.0	ISI-97004-A	ISI	-	-	-	-	-	c	-	-	-	-	-	-
B7.50	B- 3		Flange Bolts	AUG	-	-	-	-	-	-	-	-	-	-	-	-
1	RHR Return B			OWN	-	-	-	-	-	-	-	-	-	-	-	-
				PRE	-	-	-	-	-	-	-	-	-	-	-	-
B-G-2	101931	ISI/VT/ISI-VT-1.0	ISI-97004-A	ISI	-	-	-	-	-	-	-	-	s	-	-	-
B7.50	B- 4		Flange Bolts	AUG	-	-	-	-	-	-	-	-	-	-	-	-
1	RHR Return B			OWN	-	-	-	-	-	-	-	-	-	-	-	-
				PRE	-	-	-	-	-	-	-	-	-	-	-	-
B-G-2	101932	ISI/VT/ISI-VT-1.0	ISI-97004-A	ISI	-	c	-	-	-	-	-	-	-	-	-	-
B7.70	B- 5		Valve Bolts	AUG	-	-	-	-	-	-	-	-	-	-	-	-
1	RHR Return B			OWN	-	-	-	-	-	-	-	-	-	-	-	-
				PRE	-	-	-	-	-	-	-	-	-	-	-	-
F-C	101933	ISI/VT/ISI-VT-2.0	ISI-97004-A	ISI	-	-	-	-	-	c	-	-	-	-	-	-
F-A,B,C	H- 1		Variable / Slide	AUG	-	-	-	-	-	-	-	-	-	-	-	-
1	RHR Return B			OWN	-	-	-	-	-	-	-	-	-	-	-	-
				PRE	-	-	-	-	-	-	-	-	-	-	-	-
F-C	101934	ISI/VT/ISI-VT-2.0	ISI-97004-A	ISI	-	-	-	-	-	c	-	-	-	-	-	-
F-A,B,C	H- 2		Variable/Slide/Clamp	AUG	-	-	-	-	-	-	-	-	-	-	-	-
1	RHR Return B			OWN	-	-	-	-	-	-	-	-	-	-	-	-
				PRE	-	-	-	-	-	-	-	-	-	-	-	-

MONTICELLO Nuclear Generating Plant
3rd Interval ISI Plan Rev. 3 June 1, 1992 to May 31, 2002

Category, ItemNO, Class	Summary / CompID / System	Scope / Method / Procedure	Iso No. Comp. Desc. Code Case /Note		Period 1				Period 2				Period 3			
					1	2	3	4	1	2	3	4	1	2	3	4
F-B	101935	ISI/VT/ISI-VT-2.0	ISI-97004-A	ISI	-	-	-	-	-	c	-	-	b	-	-	-
F-A,B,C	H- 3		Snubber / Clamp	AUG	-	-	-	-	-	-	-	-	-	-	-	-
1	RHR Return B			OWN	-	-	-	-	-	-	-	-	-	-	-	-
				PRE	-	-	-	-	-	-	-	-	-	-	-	-
F-B	101936	ISI/VT/ISI-VT-2.0	ISI-97004-A	ISI	-	-	-	-	-	c	-	-	b	-	-	-
F-A,B,C	H- 4		Snubber / Clamp	AUG	-	-	-	-	-	-	-	-	-	-	-	-
1	RHR Return B			OWN	-	-	-	-	-	-	-	-	-	-	-	-
				PRE	-	-	-	-	-	-	-	-	-	-	-	-
B-M-2	101937		ISI-97004-A	ISI	-	-	-	-	-	-	-	-	-	-	-	-
B12.50	V- 1		Valve Int Surfaces	AUG	-	-	-	-	-	-	-	-	-	-	-	-
1	RHR Return B		NOTE:HH, RELIEF 4	OWN	-	-	-	-	-	-	-	-	-	-	-	-
				PRE	-	-	-	-	-	-	-	-	-	-	-	-
B-M-2	101938	ISI/VT/ISI-VT-3.0	ISI-97004-A	ISI	-	c	-	-	-	B	-	-	-	-	-	-
B12.50	V- 2		Valve Int Surfaces	AUG	-	-	-	-	-	-	-	-	-	-	-	-
1	RHR Return B		NOTE:HH, RELIEF 4	OWN	-	-	-	-	-	-	-	-	-	-	-	-
				PRE	-	-	-	-	-	-	-	-	-	-	-	-
B-M-2	101939		ISI-97004-A	ISI	-	-	-	-	-	-	-	-	-	-	-	-
B12.50	V- 3		Valve Int Surfaces	AUG	-	-	-	-	-	-	-	-	-	-	-	-
1	RHR Return B		NOTE:HH, RELIEF 4	OWN	-	-	-	-	-	-	-	-	-	-	-	-
				PRE	-	-	-	-	-	-	-	-	-	-	-	-
B-J	101940	ISI/MT/ISI-MT-1	ISI-97004-A	ISI	-	-	-	-	-	-	-	-	s	-	-	-
B9.11	W- 1	ISI/UT/ISI-UT-1	Valve-to-Pipe	AUG	-	-	-	-	-	-	-	-	-	-	-	-
1	RHR Return B			OWN	-	-	-	-	-	-	-	-	-	-	-	-
				PRE	-	-	-	-	-	-	-	-	-	-	-	-
B-J	101941	ISI/MT/ISI-MT-1	ISI-97004-A	ISI	-	-	-	-	-	-	-	-	s	-	-	-
B9.11	W- 2	ISI/UT/ISI-UT-1	Pipe-to-Pipe	AUG	-	-	-	-	-	-	-	-	-	-	-	-
1	RHR Return B			OWN	-	-	-	-	-	-	-	-	-	-	-	-
				PRE	-	-	-	-	-	-	-	-	-	-	-	-
B-J	101942		ISI-97004-A	ISI	-	-	-	-	-	-	-	-	-	-	-	-
B9.11	W- 3		Pipe-to-Pipe	AUG	-	-	-	-	-	-	-	-	-	-	-	-
1	RHR Return B		NOTE:DD	OWN	-	-	-	-	-	-	-	-	-	-	-	-
				PRE	-	-	-	-	-	-	-	-	-	-	-	-
B-J	101943	ISI/MT/ISI-MT-1	ISI-97004-A	ISI	c	-	-	-	-	-	-	-	-	-	-	-
B9.11	W- 4	ISI/UT/ISI-UT-1	Pipe-to-Elbow	AUG	-	-	-	-	-	-	-	-	-	-	-	-
1	RHR Return B			OWN	-	-	-	-	-	-	-	-	-	-	-	-
				PRE	-	-	-	-	-	-	-	-	-	-	-	-
B-J	101944		ISI-97004-A	ISI	-	-	-	-	-	-	-	-	-	-	-	-
B9.11	W- 5		Elbow-to-Pipe	AUG	-	-	-	-	-	-	-	-	-	-	-	-
1	RHR Return B			OWN	-	-	-	-	-	-	-	-	-	-	-	-
				PRE	-	-	-	-	-	-	-	-	-	-	-	-

MONTICELLO Nuclear Generating Plant
3rd Interval ISI Plan Rev. 3 June 1, 1992 to May 31, 2002

Category, ItemNO, Class	Summary / CompID / System	Scope / Method / Procedure	Iso No. Comp. Desc. Code Case /Note		Period 1				Period 2				Period 3			
					1	2	3	4	1	2	3	4	1	2	3	4
B-J	101945	ISI/MT/ISI-MT-1	ISI-97004-A	ISI	-	-	-	-	-	C	-	-	-	-	-	-
B9.11	W- 6	ISI/UT/ISI-UT-1	Pipe-to-Elbow	AUG	-	-	-	-	-	-	-	-	-	-	-	-
1	RHR Return B			OWN	-	-	-	-	-	-	-	-	-	-	-	-
				PRE	-	-	-	-	-	-	-	-	-	-	-	-
B-J	101946		ISI-97004-A	ISI	-	-	-	-	-	-	-	-	-	-	-	-
B9.11	W- 7		Elbow-to-Pipe	AUG	-	-	-	-	-	-	-	-	-	-	-	-
1	RHR Return B			OWN	-	-	-	-	-	-	-	-	-	-	-	-
				PRE	-	-	-	-	-	-	-	-	-	-	-	-
B-J	101947		ISI-97004-A	ISI	-	-	-	-	-	-	-	-	-	-	-	-
B9.11	W- 8		Pipe-to-Valve	AUG	-	-	-	-	-	-	-	-	-	-	-	-
1	RHR Return B			OWN	-	-	-	-	-	-	-	-	-	-	-	-
				PRE	-	-	-	-	-	-	-	-	-	-	-	-
B-J	101948		ISI-97004-A	ISI	-	-	-	-	-	-	-	-	-	-	-	-
B9.11	W- 9		Valve-to-Pipe	AUG	-	-	-	-	-	-	-	-	-	-	-	-
1	RHR Return B			OWN	-	-	-	-	-	-	-	-	-	-	-	-
				PRE	-	-	-	-	-	-	-	-	-	-	-	-
B-J	101949		ISI-97004-A	ISI	-	-	-	-	-	-	-	-	-	-	-	-
B9.11	W-10		Pipe-to-Elbow	AUG	-	-	-	-	-	-	-	-	-	-	-	-
1	RHR Return B			OWN	-	-	-	-	-	-	-	-	-	-	-	-
				PRE	-	-	-	-	-	-	-	-	-	-	-	-
B-J	101950		ISI-97004-A	ISI	-	-	-	-	-	-	-	-	-	-	-	-
B9.11	W-11		Elbow-to-Pipe	AUG	-	-	-	-	-	-	-	-	-	-	-	-
1	RHR Return B			OWN	-	-	-	-	-	-	-	-	-	-	-	-
				PRE	-	-	-	-	-	-	-	-	-	-	-	-
B-J	101951		ISI-97004-A	ISI	-	-	-	-	-	-	-	-	-	-	-	-
B9.31	W-12		Pipe-to-Weldolet	AUG	-	-	-	-	-	-	-	-	-	-	-	-
1	RHR Return B			OWN	-	-	-	-	-	-	-	-	-	-	-	-
				PRE	-	-	-	-	-	-	-	-	-	-	-	-
B-J	101952		ISI-97004-A	ISI	-	-	-	-	-	-	-	-	-	-	-	-
B9.31	W-13		Pipe-to-Weldolet	AUG	-	-	-	-	-	-	-	-	-	-	-	-
1	RHR Return B			OWN	-	-	-	-	-	-	-	-	-	-	-	-
				PRE	-	-	-	-	-	-	-	-	-	-	-	-
B-J	101953		ISI-97004-A	ISI	-	-	-	-	-	-	-	-	-	-	-	-
B9.11	W-14		Weldolet-to-Flange	AUG	-	-	-	-	-	-	-	-	-	-	-	-
1	RHR Return B			OWN	-	-	-	-	-	-	-	-	-	-	-	-
				PRE	-	-	-	-	-	-	-	-	-	-	-	-
B-J	101954		ISI-97004-A	ISI	-	-	-	-	-	-	-	-	-	-	-	-
B9.11	W-15		Pipe-to-Elbow	AUG	-	-	-	-	-	-	-	-	-	-	-	-
1	RHR Return B			OWN	-	-	-	-	-	-	-	-	-	-	-	-
				PRE	-	-	-	-	-	-	-	-	-	-	-	-

MONTICELLO Nuclear Generating Plant
3rd Interval ISI Plan Rev. 3 June 1, 1992 to May 31, 2002

Category, ItemNO, Class	Summary / CompID / System	Scope / Method / Procedure	Iso No. Comp. Desc. Code Case /Note		Period 1				Period 2				Period 3			
					1	2	3	4	1	2	3	4	1	2	3	4
B-J	101955		ISI-97004-A	ISI	-	-	-	-	-	-	-	-	-	-	-	-
B9.11	W-16		Elbow-to-Pipe	AUG	-	-	-	-	-	-	-	-	-	-	-	-
1	RHR Return B			OWN	-	-	-	-	-	-	-	-	-	-	-	-
				PRE	-	-	-	-	-	-	-	-	-	-	-	-
B-J	101956		ISI-97004-A	ISI	-	-	-	-	-	-	-	-	-	-	-	-
B9.11	W-17		Pipe-to-Elbow	AUG	-	-	-	-	-	-	-	-	-	-	-	-
1	RHR Return B			OWN	-	-	-	-	-	-	-	-	-	-	-	-
				PRE	-	-	-	-	-	-	-	-	-	-	-	-
B-J	101957		ISI-97004-A	ISI	-	-	-	-	-	-	-	-	-	-	-	-
B9.11	W-18		Elbow-to-Pipe	AUG	-	-	-	-	-	-	-	-	-	-	-	-
1	RHR Return B			OWN	-	-	-	-	-	-	-	-	-	-	-	-
				PRE	-	-	-	-	-	-	-	-	-	-	-	-
B-J	101958		ISI-97004-A	ISI	-	-	-	-	-	-	-	-	-	-	-	-
B9.11	W-19		Pipe-to-Elbow	AUG	-	-	-	-	-	-	-	-	-	-	-	-
1	RHR Return B			OWN	-	-	-	-	-	-	-	-	-	-	-	-
				PRE	-	-	-	-	-	-	-	-	-	-	-	-
B-J	101959		ISI-97004-A	ISI	-	-	-	-	-	-	-	-	-	-	-	-
B9.11	W-20		Elbow-to-Pipe	AUG	-	-	-	-	-	-	-	-	-	-	-	-
1	RHR Return B			OWN	-	-	-	-	-	-	-	-	-	-	-	-
				PRE	-	-	-	-	-	-	-	-	-	-	-	-
B-J	101960	ISI/MT/ISI-MT-1	ISI-97004-A	ISI	-	-	-	-	-	-	-	-	s	-	-	-
B9.31	W-21	ISI/UT/ISI-UT-1	Pipe-to-Weldolet	AUG	-	-	-	-	-	-	-	-	-	-	-	-
1	RHR Return B			OWN	-	-	-	-	-	-	-	-	-	-	-	-
				PRE	-	-	-	-	-	-	-	-	-	-	-	-
B-J	101961	ISI/MT/ISI-MT-1	ISI-97004-A	ISI	-	-	-	-	-	-	-	-	s	-	-	-
B9.11	W-22	ISI/UT/ISI-UT-1	Weldolet-to-Flange	AUG	-	-	-	-	-	-	-	-	-	-	-	-
1	RHR Return B			OWN	-	-	-	-	-	-	-	-	-	-	-	-
				PRE	-	-	-	-	-	-	-	-	-	-	-	-
B-J	101962		ISI-97004-A	ISI	-	-	-	-	-	-	-	-	-	-	-	-
B9.11	W-23		Pipe-to-Valve	AUG	-	-	-	-	-	-	-	-	-	-	-	-
1	RHR Return B			OWN	-	-	-	-	-	-	-	-	-	-	-	-
				PRE	-	-	-	-	-	-	-	-	-	-	-	-
B-J	101963		ISI-97004-A	ISI	-	-	-	-	-	-	-	-	-	-	-	-
B9.11	W-24		Valve-to-Pipe	AUG	-	-	-	-	-	-	-	-	-	-	-	-
1	RHR Return B			OWN	-	-	-	-	-	-	-	-	-	-	-	-
				PRE	-	-	-	-	-	-	-	-	-	-	-	-
B-J	101964	ISI/PT/ISI-PT-1	ISI-97004-A	ISI	-	c	-	-	-	-	-	-	-	-	-	-
B9.10	W-25 LS D	ISI/UT/ISI-UT-16	Pipe-to-Pipe	AUG	-	-	-	-	-	-	-	-	-	-	-	-
1	RHR Return B		NOTE:CC	OWN	-	-	-	-	-	-	-	-	-	-	-	-
				PRE	-	-	-	-	-	-	-	-	-	-	-	-

MONTICELLO Nuclear Generating Plant
3rd Interval ISI Plan Rev. 3 June 1, 1992 to May 31, 2002

Category, ItemNO, Class	Summary / CompID / System	Scope / Method / Procedure	Iso No. Comp. Desc. Code Case /Note		Period 1				Period 2				Period 3			
					1	2	3	4	1	2	3	4	1	2	3	4
B-J	101965		ISI-97004-A	ISI	-	-	-	-	-	-	-	-	-	-	-	-
B9.10	W-26 LS U&D		Pipe-to-Reducer	AUG	-	-	-	-	-	-	-	-	-	-	-	-
1	RHR Return B			OWN	-	-	-	-	-	-	-	-	-	-	-	-
				PRE	-	-	-	-	-	-	-	-	-	-	-	-
B-J	101966		ISI-97004-A	ISI	-	-	-	-	-	-	-	-	-	-	-	-
B9.10	W-27 LS U&D		Reducer-to-Pipe	AUG	-	-	-	-	-	-	-	-	-	-	-	-
1	RHR Return B			OWN	-	-	-	-	-	-	-	-	-	-	-	-
				PRE	-	-	-	-	-	-	-	-	-	-	-	-
B-J	101967		ISI-97004-A	ISI	-	-	-	-	-	-	-	-	-	-	-	-
B9.11	W-28 LS U&D		Pipe-to-Elbow	AUG	-	-	-	-	-	-	-	-	-	-	-	-
1	RHR Return B			OWN	-	-	-	-	-	-	-	-	-	-	-	-
				PRE	-	-	-	-	-	-	-	-	-	-	-	-
B-J	101968	ISI/PT/ISI-PT-1	ISI-97004-A	ISI	-	c	-	-	-	-	-	-	-	-	-	-
B9.10	W-29 LS U&D	ISI/UT/ISI-UT-16	Elbow-to-Pipe	AUG	-	-	-	-	-	-	-	-	-	-	-	-
1	RHR Return B			OWN	-	-	-	-	-	-	-	-	-	-	-	-
				PRE	-	-	-	-	-	-	-	-	-	-	-	-
B-J	101969		ISI-97004-A	ISI	-	-	-	-	-	-	-	-	-	-	-	-
B9.10	W-30 LS U&D		Pipe-to-Tee	AUG	-	-	-	-	-	-	-	-	-	-	-	-
1	RHR Return B			OWN	-	-	-	-	-	-	-	-	-	-	-	-
				PRE	-	-	-	-	-	-	-	-	-	-	-	-
B-G-2	101970	ISI/VT/ISI-VT-1.0	ISI-97005-A	ISI	c	-	-	-	-	-	-	-	-	-	-	-
B7.70	B- 1		Valve Bolts	AUG	-	-	-	-	-	-	-	-	-	-	-	-
1	Recirculation A			OWN	-	-	-	-	-	-	-	-	-	-	-	-
				PRE	-	-	-	-	-	-	-	-	-	-	-	-
B-G-1	101971	ISI/VT/ISI-VT-1.0	ISI-97005-A	ISI	c	-	-	-	-	-	-	-	-	-	-	-
B6.180	B- 2		Pump Bolting	AUG	-	-	-	-	-	-	-	-	-	-	-	-
1	Recirculation A			OWN	-	-	-	-	-	-	-	-	-	-	-	-
				PRE	-	-	-	-	-	-	-	-	-	-	-	-
B-G-2	101972	ISI/VT/ISI-VT-1.0	ISI-97005-A	ISI	-	-	-	-	-	-	-	-	s	-	-	-
B7.50	B- 3		Flange Bolts @ W-17	AUG	-	-	-	-	-	-	-	-	-	-	-	-
1	Recirculation A			OWN	-	-	-	-	-	-	-	-	-	-	-	-
				PRE	-	-	-	-	-	-	-	-	-	-	-	-
B-G-2	101973	ISI/VT/ISI-VT-1.0	ISI-97005-A	ISI	c	-	-	-	-	-	-	-	-	-	-	-
B7.70	B- 4		Valve Bolts	AUG	-	-	-	-	-	-	-	-	-	-	-	-
1	Recirculation A			OWN	-	-	-	-	-	-	-	-	-	-	-	-
				PRE	-	-	-	-	-	-	-	-	-	-	-	-
F-A	101974	ISI/VT/ISI-VT-2.0	ISI-97005-A	ISI	-	-	-	-	-	c	-	-	-	-	-	-
F-A,B,C	H- 1		Seismic Restraint	AUG	-	-	-	-	-	-	-	-	-	-	-	-
1	Recirculation A			OWN	-	-	-	-	-	-	-	-	-	-	-	-
				PRE	-	-	-	-	-	-	-	-	-	-	-	-

MONTICELLO Nuclear Generating Plant
3rd Interval ISI Plan Rev. 3 June 1, 1992 to May 31, 2002

Category, ItemNO, Class	Summary / CompID / System	Scope / Method / Procedure	Iso No. Comp. Desc. Code Case /Note		Period 1				Period 2				Period 3			
					1	2	3	4	1	2	3	4	1	2	3	4
F-C	101975	ISI/VT/ISI-VT-2.0	ISI-97005-A	ISI	c	B	-	-	-	B	-	-	-	-	-	-
F-A,B,C	H-11		Sway Brace	AUG	-	-	-	-	-	-	-	-	-	-	-	-
1	Recirculation A			OWN	-	-	-	-	-	-	-	-	-	-	-	-
				PRE	-	-	-	-	-	-	-	-	-	-	-	-
B-K-1	101976	ISI/PT/ISI-PT-1	ISI-97005-A	ISI	-	-	-	-	-	c	-	-	-	-	-	-
B10.10	H- 2	ISI/VT/ISI-VT-2.0	Dbl Spring / 4 Lugs	AUG	-	-	-	-	-	-	-	-	-	-	-	-
1	Recirculation A			OWN	-	-	-	-	-	-	-	-	-	-	-	-
				PRE	-	-	-	-	-	-	-	-	-	-	-	-
F-C	101978	ISI/VT/ISI-VT-2.0	ISI-97005-A	ISI	-	-	-	-	-	c	-	-	-	-	-	-
F-A,B,C	H- 3		Sway Brace	AUG	-	-	-	-	-	-	-	-	-	-	-	-
1	Recirculation A			OWN	-	-	-	-	-	-	-	-	-	-	-	-
				PRE	-	-	-	-	-	-	-	-	-	-	-	-
F-B	101980	ISI/VT/ISI-VT-2.0	ISI-97005-A	ISI	-	-	-	-	-	c	-	-	-	-	-	-
F-A,B,C	H- 4		Seismic Restraint	AUG	-	-	-	-	-	-	-	-	-	-	-	-
1	Recirculation A			OWN	-	-	-	-	-	-	-	-	-	-	-	-
				PRE	-	-	-	-	-	-	-	-	-	-	-	-
B-K-1	101981	ISI/PT/ISI-PT-1	ISI-97005-A	ISI	-	c	-	-	-	-	-	-	-	-	-	-
B10.10	H- 5	ISI/VT/ISI-VT-2.0	Clevis / Lugs	AUG	-	-	-	-	-	-	-	-	-	-	-	-
1	Recirculation A			OWN	-	-	-	-	-	-	-	-	-	-	-	-
				PRE	-	-	-	-	-	-	-	-	-	-	-	-
B-K-1	101983		ISI-97005-A	ISI	-	-	-	-	-	-	-	-	-	-	-	-
B10.10	H- 6		Clevis / Lugs	AUG	-	-	-	-	-	-	-	-	-	-	-	-
1	Recirculation A			OWN	-	-	-	-	-	-	-	-	-	-	-	-
				PRE	-	-	-	-	-	-	-	-	-	-	-	-
B-K-1	101984	ISI/PT/ISI-PT-1	ISI-97005-A	ISI	c	-	-	-	-	-	-	-	-	-	-	-
B10.10	H- 7	ISI/VT/ISI-VT-2.0	Double Spring	AUG	-	-	-	-	-	-	-	-	-	-	-	-
1	Recirculation A			OWN	-	-	-	-	-	-	-	-	-	-	-	-
				PRE	-	-	-	-	-	-	-	-	-	-	-	-
B-K-1	101986	ISI/VT/ISI-VT-2.0	ISI-97005-A	ISI	-	c	-	-	-	B	-	-	b	-	-	-
B10.10	H- 8	ISI/PT/ISI-PT-1	Snubber / Lugs	AUG	-	-	-	-	-	-	-	-	-	-	-	-
1	Recirculation A			OWN	-	-	-	-	-	-	-	-	-	-	-	-
				PRE	-	-	-	-	-	-	-	-	-	-	-	-
F-B	101988	ISI/VT/ISI-VT-2.0	ISI-97005-A	ISI	-	-	-	-	-	-	-	-	s	-	-	-
F-A,B,C	H- 9		Seismic Restraint	AUG	-	-	-	-	-	-	-	-	-	-	-	-
1	Recirculation A			OWN	-	-	-	-	-	-	-	-	-	-	-	-
				PRE	-	-	-	-	-	-	-	-	-	-	-	-
B-K-1	101989	ISI/PT/ISI-PT-1	ISI-97005-A	ISI	c	-	-	-	-	-	-	-	-	-	-	-
B10.10	H-10	ISI/VT/ISI-VT-2.0	Dbl Spring / 4 Lugs	AUG	-	-	-	-	-	-	-	-	-	-	-	-
1	Recirculation A			OWN	-	-	-	-	-	-	-	-	-	-	-	-
				PRE	-	-	-	-	-	-	-	-	-	-	-	-

MONTICELLO Nuclear Generating Plant
3rd Interval ISI Plan Rev. 3 June 1, 1992 to May 31, 2002

Category, ItemNO, Class	Summary / CompID / System	Scope / Method / Procedure	Iso No. Comp. Desc. Code Case /Note		Period 1				Period 2				Period 3			
					1	2	3	4	1	2	3	4	1	2	3	4
F-B	101991	ISI/VT/ISI-VT-2.0	ISI-97005-A	ISI	-	-	-	-	-	-	-	-	s	-	-	-
F-A,B,C	H-12		Seismic Restraint	AUG	-	-	-	-	-	-	-	-	-	-	-	-
1	Recirculation A			OWN	-	-	-	-	-	-	-	-	-	-	-	-
				PRE	-	-	-	-	-	-	-	-	-	-	-	-
B-G-1	101992		ISI-97005-A	ISI	-	-	-	-	-	-	-	-	-	-	-	-
B6.190	P200A		Pump	AUG	-	-	-	-	-	-	-	-	-	-	-	-
1	Recirculation A		NOTE: RELIEF 3	OWN	-	-	-	-	-	-	-	-	-	-	-	-
				PRE	-	-	-	-	-	-	-	-	-	-	-	-
B-M-2	101993		ISI-97005-A	ISI	-	-	-	-	-	-	-	-	-	-	-	-
B12.50	V- 1		Valve Int Surfaces	AUG	-	-	-	-	-	-	-	-	-	-	-	-
1	Recirculation A		NOTE: II, RELIEF 4	OWN	-	-	-	-	-	-	-	-	-	-	-	-
				PRE	-	-	-	-	-	-	-	-	-	-	-	-
B-M-2	101994		ISI-97005-A	ISI	-	-	-	-	-	-	-	-	-	-	-	-
B12.50	V- 2		Valve Internals	AUG	-	-	-	-	-	-	-	-	-	-	-	-
1	Recirculation A		NOTE: II, RELIEF 4	OWN	-	-	-	-	-	-	-	-	-	-	-	-
				PRE	-	-	-	-	-	-	-	-	-	-	-	-
B-F	101995	ISI/MT/ISI-PT-2	ISI-97005-A	ISI	c	-	-	-	-	-	-	-	-	-	-	-
B5.10	W- 1	ISI/UT/ISI-UT-16	Nozzle-to-Safe End	AUG	-	-	-	-	-	-	-	-	-	-	-	-
1	Recirculation A		NOTE:CC	OWN	-	-	-	-	-	-	-	-	-	-	-	-
				PRE	-	-	-	-	-	-	-	-	-	-	-	-
B-J	101996		ISI-97005-A	ISI	-	-	-	-	-	-	-	-	-	-	-	-
B9.10	W- 2 LS D		Safe End-to-Pipe	AUG	-	-	-	-	-	-	-	-	-	-	-	-
1	Recirculation A			OWN	-	-	-	-	-	-	-	-	-	-	-	-
				PRE	-	-	-	-	-	-	-	-	-	-	-	-
B-J	101997	ISI/PT/ISI-PT-1	ISI-97005-A	ISI	-	-	-	-	-	c	-	-	-	-	-	-
B9.10	W- 3 LS U&D	ISI/UT/ISI-UT-16	Pipe-to-Elbow	AUG	-	-	-	-	-	-	-	-	-	-	-	-
1	Recirculation A			OWN	-	-	-	-	-	-	-	-	-	-	-	-
				PRE	-	-	-	-	-	-	-	-	-	-	-	-
B-J	101998		ISI-97005-A	ISI	-	-	-	-	-	-	-	-	-	-	-	-
B9.10	W- 4 LS U&D		Elbow-to-Pipe	AUG	-	-	-	-	-	-	-	-	-	-	-	-
1	Recirculation A			OWN	-	-	-	-	-	-	-	-	-	-	-	-
				PRE	-	-	-	-	-	-	-	-	-	-	-	-
B-J	101999	ISI/PT/ISI-PT-1	ISI-97005-A	ISI	-	-	-	-	-	c	-	-	-	-	-	-
B9.10	W- 5 LS U&D	ISI/UT/ISI-UT-16	Pipe-to-Tee	AUG	-	-	-	-	-	-	-	-	-	-	-	-
1	Recirculation A			OWN	-	-	-	-	-	-	-	-	-	-	-	-
				PRE	-	-	-	-	-	-	-	-	-	-	-	-
B-J	102000		ISI-97005-A	ISI	-	-	-	-	-	-	-	-	-	-	-	-
B9.10	W- 6 LS U&D		Tee-to-Pipe	AUG	-	-	-	-	-	-	-	-	-	-	-	-
1	Recirculation A			OWN	-	-	-	-	-	-	-	-	-	-	-	-
				PRE	-	-	-	-	-	-	-	-	-	-	-	-

MONTICELLO Nuclear Generating Plant
3rd Interval ISI Plan Rev. 3 June 1, 1992 to May 31, 2002

Category, ItemNO, Class	Summary / CompID / System	Scope / Method / Procedure	Iso No. Comp. Desc. Code Case /Note		Period 1				Period 2				Period 3			
					1	2	3	4	1	2	3	4	1	2	3	4
B-J	102001		ISI-97005-A	ISI	-	-	-	-	-	-	-	-	-	-	-	-
B9.10	W- 7 LS U&D		Pipe-to-Pipe	AUG	-	-	-	-	-	-	-	-	-	-	-	-
1	Recirculation A			OWN	-	-	-	-	-	-	-	-	-	-	-	-
				PRE	-	-	-	-	-	-	-	-	-	-	-	-
B-J	102002		ISI-97005-A	ISI	-	-	-	-	-	-	-	-	-	-	-	-
B9.10	W- 8 LS U&D		Pipe-to-Pipe	AUG	-	-	-	-	-	-	-	-	-	-	-	-
1	Recirculation A			OWN	-	-	-	-	-	-	-	-	-	-	-	-
				PRE	-	-	-	-	-	-	-	-	-	-	-	-
B-J	102003	ISI/PT/ISI-PT-1	ISI-97005-A	ISI	-	-	-	-	-	c	-	-	-	-	-	-
B9.10	W- 9 LS U&D	ISI/UT/ISI-UT-16	Pipe-to-Bent Pipe	AUG	-	-	-	-	-	-	-	-	-	-	-	-
1	Recirculation A			OWN	-	-	-	-	-	-	-	-	-	-	-	-
				PRE	-	-	-	-	-	-	-	-	-	-	-	-
B-J	102004		ISI-97005-A	ISI	-	-	-	-	-	-	-	-	-	-	-	-
B9.10	W-10 LS U		Bent Pipe-to-Valve	AUG	-	-	-	-	-	-	-	-	-	-	-	-
1	Recirculation A			OWN	-	-	-	-	-	-	-	-	-	-	-	-
				PRE	-	-	-	-	-	-	-	-	-	-	-	-
B-J	102005		ISI-97005-A	ISI	-	-	-	-	-	-	-	-	-	-	-	-
B9.10	W-11 LS D		Valve-to-Pipe	AUG	-	-	-	-	-	-	-	-	-	-	-	-
1	Recirculation A			OWN	-	-	-	-	-	-	-	-	-	-	-	-
				PRE	-	-	-	-	-	-	-	-	-	-	-	-
B-J	102006		ISI-97005-A	ISI	-	-	-	-	-	-	-	-	-	-	-	-
B9.32	W-12		Pipe-to-Hf Coupling	AUG	-	-	-	-	-	-	-	-	-	-	-	-
1	Recirculation A			OWN	-	-	-	-	-	-	-	-	-	-	-	-
				PRE	-	-	-	-	-	-	-	-	-	-	-	-
B-J	102007		ISI-97005-A	ISI	-	-	-	-	-	-	-	-	-	-	-	-
B9.10	W-13 LS U&D		Pipe-to-Bent Pipe	AUG	-	-	-	-	-	-	-	-	-	-	-	-
1	Recirculation A			OWN	-	-	-	-	-	-	-	-	-	-	-	-
				PRE	-	-	-	-	-	-	-	-	-	-	-	-
B-J	102008	ISI/PT/ISI-PT-1	ISI-97005-A	ISI	c	-	-	-	-	-	-	-	-	-	-	-
B9.10	W-14 LS U	ISI/UT/ISI-UT-16	Elbow-to-Pump	AUG	-	-	-	-	-	-	-	-	-	-	-	-
1	Recirculation A			OWN	-	-	-	-	-	-	-	-	-	-	-	-
				PRE	-	-	-	-	-	-	-	-	-	-	-	-
B-J	102009		ISI-97005-A	ISI	-	-	-	-	-	-	-	-	-	-	-	-
B9.10	W-15 LS D		Pump-to-Pipe	AUG	-	-	-	-	-	-	-	-	-	-	-	-
1	Recirculation A			OWN	-	-	-	-	-	-	-	-	-	-	-	-
				PRE	-	-	-	-	-	-	-	-	-	-	-	-
B-J	102010		ISI-97005-A	ISI	-	-	-	-	-	-	-	-	-	-	-	-
B9.32	W-16 LS U&D		Pipe-to-Branch	AUG	-	-	-	-	-	-	-	-	-	-	-	-
1	Recirculation A			OWN	-	-	-	-	-	-	-	-	-	-	-	-
				PRE	-	-	-	-	-	-	-	-	-	-	-	-

MONTICELLO Nuclear Generating Plant
3rd Interval ISI Plan Rev. 3 June 1, 1992 to May 31, 2002

Category, ItemNO, Class	Summary / CompID / System	Scope / Method / Procedure	Iso No. Comp. Desc. Code Case /Note		Period 1				Period 2				Period 3			
					1	2	3	4	1	2	3	4	1	2	3	4
B-J	102011		ISI-97005-A	ISI	-	-	-	-	-	-	-	-	-	-	-	-
B9.40	W-17		Branch-to-Flange	AUG	-	-	-	-	-	-	-	-	-	-	-	-
1	Recirculation A			OWN	-	-	-	-	-	-	-	-	-	-	-	-
				PRE	-	-	-	-	-	-	-	-	-	-	-	-
B-J	102012		ISI-97005-A	ISI	-	-	-	-	-	-	-	-	-	-	-	-
B9.10	W-18 LS U		Pipe-to-Valve	AUG	-	-	-	-	-	-	-	-	-	-	-	-
1	Recirculation A			OWN	-	-	-	-	-	-	-	-	-	-	-	-
				PRE	-	-	-	-	-	-	-	-	-	-	-	-
B-J	102013		ISI-97005-A	ISI	-	-	-	-	-	-	-	-	-	-	-	-
B9.10	W-19 LS U&D		Valve-to-Bent Pipe	AUG	-	-	-	-	-	-	-	-	-	-	-	-
1	Recirculation A			OWN	-	-	-	-	-	-	-	-	-	-	-	-
				PRE	-	-	-	-	-	-	-	-	-	-	-	-
B-J	102014		ISI-97005-A	ISI	-	-	-	-	-	-	-	-	-	-	-	-
B9.11	W-20 LS U&D		Bent Pipe-to-Pipe	AUG	-	-	-	-	-	-	-	-	-	-	-	-
1	Recirculation A			OWN	-	-	-	-	-	-	-	-	-	-	-	-
				PRE	-	-	-	-	-	-	-	-	-	-	-	-
B-J	102015		ISI-97005-A	ISI	-	-	-	-	-	-	-	-	-	-	-	-
B9.10	W-21 LS U&D		Pipe-to-Pipe	AUG	-	-	-	-	-	-	-	-	-	-	-	-
1	Recirculation A			OWN	-	-	-	-	-	-	-	-	-	-	-	-
				PRE	-	-	-	-	-	-	-	-	-	-	-	-
B-J	102016	ISI/PT/ISI-PT-1	ISI-97005-A	ISI	-	-	-	-	-	-	-	-	s	-	-	-
B9.10	W-22 LS U&D	ISI/UT/ISI-UT-16	Pipe-to-Tee	AUG	-	-	-	-	-	-	-	-	-	-	-	-
1	Recirculation A			OWN	-	-	-	-	-	-	-	-	-	-	-	-
				PRE	-	-	-	-	-	-	-	-	-	-	-	-
B-J	102017		ISI-97005-A	ISI	-	-	-	-	-	-	-	-	-	-	-	-
B9.10	W-23 LS U&D		Tee-to-Cross Pipe	AUG	-	-	-	-	-	-	-	-	-	-	-	-
1	Recirculation A			OWN	-	-	-	-	-	-	-	-	-	-	-	-
				PRE	-	-	-	-	-	-	-	-	-	-	-	-
F-B	102018	ISI/VT/ISI-VT-2.0	ISI-97005-B	ISI	-	-	-	-	-	c	-	-	-	-	-	-
F-A,B,C	H- 1		Restraint	AUG	-	-	-	-	-	-	-	-	-	-	-	-
1	Recirc Manifold A			OWN	-	-	-	-	-	-	-	-	-	-	-	-
				PRE	-	-	-	-	-	-	-	-	-	-	-	-
B-K-1	102019	ISI/VT/ISI-VT-2.0	ISI-97005-B	ISI	-	c	-	-	-	B	-	-	b	-	-	-
B10.10	H- 2	ISI/MT/ISI-MT-1	Snubber / Lugs	AUG	-	-	-	-	-	-	-	-	-	-	-	-
1	Recirc Manifold A			OWN	-	-	-	-	-	-	-	-	-	-	-	-
				PRE	-	-	-	-	-	-	-	-	-	-	-	-
F-B	102020	ISI/VT/ISI-VT-2.0	ISI-97005-B	ISI	c	-	-	-	-	-	-	-	-	-	-	-
F-A,B,C	H- 3		Restraint	AUG	-	-	-	-	-	-	-	-	-	-	-	-
1	Recirc Manifold A			OWN	-	-	-	-	-	-	-	-	-	-	-	-
				PRE	-	-	-	-	-	-	-	-	-	-	-	-

MONTICELLO Nuclear Generating Plant
3rd Interval ISI Plan Rev. 3 June 1, 1992 to May 31, 2002

Category, ItemNO, Class	Summary / CompID / System	Scope / Method / Procedure	Iso No. Comp. Desc. Code Case /Note		Period 1				Period 2				Period 3			
					1	2	3	4	1	2	3	4	1	2	3	4
F-B	102021	ISI/VT/ISI-VT-2.0	ISI-97005-B	ISI	-	-	-	-	-	c	-	-	-	-	-	-
F-A,B,C	H- 4		Restraint	AUG	-	-	-	-	-	-	-	-	-	-	-	-
1	Recirc Manifold A			OWN	-	-	-	-	-	-	-	-	-	-	-	-
				PRE	-	-	-	-	-	-	-	-	-	-	-	-
F-B	102022	ISI/VT/ISI-VT-2.0	ISI-97005-B	ISI	c	-	-	-	-	-	-	-	-	-	-	-
F-A,B,C	H- 5		Restraint	AUG	-	-	-	-	-	-	-	-	-	-	-	-
1	Recirc Manifold A			OWN	-	-	-	-	-	-	-	-	-	-	-	-
				PRE	-	-	-	-	-	-	-	-	-	-	-	-
B-K-1	102023	ISI/VT/ISI-VT-2.0	ISI-97005-B	ISI	c	-	-	-	-	-	-	-	-	-	-	-
B10.10	H- 6	ISI/PT/ISI-PT-1	Spring / Lugs	AUG	-	-	-	-	-	-	-	-	-	-	-	-
1	Recirc Manifold A			OWN	-	-	-	-	-	-	-	-	-	-	-	-
				PRE	-	-	-	-	-	-	-	-	-	-	-	-
F-B	102024	ISI/VT/ISI-VT-2.0	ISI-97005-B	ISI	c	-	-	-	-	-	-	-	-	-	-	-
F-A,B,C	H- 7		Restraint	AUG	-	-	-	-	-	-	-	-	-	-	-	-
1	Recirc Manifold A			OWN	-	-	-	-	-	-	-	-	-	-	-	-
				PRE	-	-	-	-	-	-	-	-	-	-	-	-
F-B	102025	ISI/VT/ISI-VT-2.0	ISI-97005-B	ISI	c	-	-	-	-	-	-	-	-	-	-	-
F-A,B,C	H- 8		Restraint	AUG	-	-	-	-	-	-	-	-	-	-	-	-
1	Recirc Manifold A			OWN	-	-	-	-	-	-	-	-	-	-	-	-
				PRE	-	-	-	-	-	-	-	-	-	-	-	-
F-B	102026	ISI/VT/ISI-VT-2.0	ISI-97005-B	ISI	c	-	-	-	-	-	-	-	-	-	-	-
F-A,B,C	H- 9		Restraint	AUG	-	-	-	-	-	-	-	-	-	-	-	-
1	Recirc Manifold A			OWN	-	-	-	-	-	-	-	-	-	-	-	-
				PRE	-	-	-	-	-	-	-	-	-	-	-	-
F-B	102027	ISI/VT/ISI-VT-2.0	ISI-97005-B	ISI	-	-	-	-	-	-	-	-	-	s	-	-
F-A,B,C	H-10		Restraint	AUG	-	-	-	-	-	-	-	-	-	-	-	-
1	Recirc Manifold A			OWN	-	-	-	-	-	-	-	-	-	-	-	-
				PRE	-	-	-	-	-	-	-	-	-	-	-	-
B-K-1	102028	ISI/PT/ISI-PT-1	ISI-97005-B	ISI	-	-	-	-	-	-	-	-	-	s	-	-
B10.10	H-11	ISI/VT/ISI-VT-2.0	Spring / Lugs	AUG	-	-	-	-	-	-	-	-	-	-	-	-
1	Recirc Manifold A			OWN	-	-	-	-	-	-	-	-	-	-	-	-
				PRE	-	-	-	-	-	-	-	-	-	-	-	-
B-K-1	102029	ISI/PT/ISI-PT-1	ISI-97005-B	ISI	-	-	-	-	-	-	-	-	-	s	-	-
B10.10	H-12	ISI/VT/ISI-VT-2.0	Snubber / Lugs	AUG	-	-	-	-	-	-	-	-	-	-	-	-
1	Recirc Manifold A			OWN	-	-	-	-	-	-	-	-	-	-	-	-
				PRE	-	-	-	-	-	-	-	-	-	-	-	-
F-B	102030	ISI/VT/ISI-VT-2.0	ISI-97005-B	ISI	-	-	-	-	-	-	-	-	-	s	-	-
F-A,B,C	H-13		Restraint	AUG	-	-	-	-	-	-	-	-	-	-	-	-
1	Recirc Manifold A			OWN	-	-	-	-	-	-	-	-	-	-	-	-
				PRE	-	-	-	-	-	-	-	-	-	-	-	-

MONTICELLO Nuclear Generating Plant
3rd Interval ISI Plan Rev. 3 June 1, 1992 to May 31, 2002

Category, ItemNO, Class	Summary / CompID / System	Scope / Method / Procedure	Iso No. Comp. Desc. Code Case /Note		Period 1				Period 2				Period 3			
					1	2	3	4	1	2	3	4	1	2	3	4
B-J	102031		ISI-97005-B	ISI	-	-	-	-	-	-	-	-	-	-	-	-
B9.10	W- 1 LS U&D		CrossPipe-to-Reducer	AUG	-	-	-	-	-	-	-	-	-	-	-	-
1	Recirc Manifold A			OWN	-	-	-	-	-	-	-	-	-	-	-	-
				PRE	-	-	-	-	-	-	-	-	-	-	-	-
B-J	102032		ISI-97005-B	ISI	-	-	-	-	-	-	-	-	-	-	-	-
B9.10	W- 2 LS U		Reducer-to-Pipe	AUG	-	-	-	-	-	-	-	-	-	-	-	-
1	Recirc Manifold A			OWN	-	-	-	-	-	-	-	-	-	-	-	-
				PRE	-	-	-	-	-	-	-	-	-	-	-	-
B-J	102033		ISI-97005-B	ISI	-	-	-	-	-	-	-	-	-	-	-	-
B9.11	W- 3		Pipe-to-Safe End	AUG	-	-	-	-	-	-	-	-	-	-	-	-
1	Recirc Manifold A			OWN	-	-	-	-	-	-	-	-	-	-	-	-
				PRE	-	-	-	-	-	-	-	-	-	-	-	-
B-F	102034	ISI/PT/ISI-PT-1	ISI-97005-B	ISI	-	-	-	-	-	C	-	-	-	-	-	-
B5.10	W- 4	ISI/UT/ISI-UT-16	Safe End-to-Nozzle	AUG	-	-	-	-	-	-	-	-	-	-	-	-
1	Recirc Manifold A		NOTE:CC	OWN	-	-	-	-	-	-	-	-	-	-	-	-
				PRE	-	-	-	-	-	-	-	-	-	-	-	-
B-J	102035	ISI/PT/ISI-PT-1	ISI-97005-B	ISI	-	-	-	-	-	C	-	-	-	-	-	-
B9.10	W- 5 LS D	ISI/UT/ISI-UT-16	Cross Pipe-to-Pipe	AUG	-	-	-	-	-	-	-	-	-	-	-	-
1	Recirc Manifold A			OWN	-	-	-	-	-	-	-	-	-	-	-	-
				PRE	-	-	-	-	-	-	-	-	-	-	-	-
B-J	102036		ISI-97005-B	ISI	-	-	-	-	-	-	-	-	-	-	-	-
B9.10	W- 6 LS U&D		Pipe-to-Pipe	AUG	-	-	-	-	-	-	-	-	-	-	-	-
1	Recirc Manifold A			OWN	-	-	-	-	-	-	-	-	-	-	-	-
				PRE	-	-	-	-	-	-	-	-	-	-	-	-
B-J	102037		ISI-97005-B	ISI	-	-	-	-	-	-	-	-	-	-	-	-
B9.10	W- 7 LS U&D		Pipe-to-Tee	AUG	-	-	-	-	-	-	-	-	-	-	-	-
1	Recirc Manifold A			OWN	-	-	-	-	-	-	-	-	-	-	-	-
				PRE	-	-	-	-	-	-	-	-	-	-	-	-
B-J	102038		ISI-97005-B	ISI	-	-	-	-	-	-	-	-	-	-	-	-
B9.10	W- 8 LS U&D		Tee-to-Pipe	AUG	-	-	-	-	-	-	-	-	-	-	-	-
1	Recirc Manifold A			OWN	-	-	-	-	-	-	-	-	-	-	-	-
				PRE	-	-	-	-	-	-	-	-	-	-	-	-
B-J	102039	ISI/PT/ISI-PT-1	ISI-97005-B	ISI	-	-	-	-	-	C	-	-	-	-	-	-
B9.11	W- 9 LS U	ISI/UT/ISI-UT-16	Pipe-to-Pipe	AUG	-	-	-	-	-	-	-	-	-	-	-	-
1	Recirc Manifold A			OWN	-	-	-	-	-	-	-	-	-	-	-	-
				PRE	-	-	-	-	-	-	-	-	-	-	-	-
B-J	102040		ISI-97005-B	ISI	-	-	-	-	-	-	-	-	-	-	-	-
B9.10	W-10		Pipe-to-Safe End	AUG	-	-	-	-	-	-	-	-	-	-	-	-
1	Recirc Manifold A			OWN	-	-	-	-	-	-	-	-	-	-	-	-
				PRE	-	-	-	-	-	-	-	-	-	-	-	-

MONTICELLO Nuclear Generating . .ant
3rd Interval ISI Plan Rev. 3 June 1, 1992 to May 31, 2002

Category, ItemNO, Class	Summary / CompID / System	Scope / Method / Procedure	Iso No. Comp. Desc. Code Case /Note		Period 1				Period 2				Period 3			
					1	2	3	4	1	2	3	4	1	2	3	4
B-F	102041	ISI/PT/ISI-PT-1	ISI-97005-B	ISI	-	-	-	-	-	c	-	-	-	-	-	-
B5.10	W-11	ISI/UT/ISI-UT-16	Safe End-to-Nozzle	AUG	-	-	-	-	-	-	-	-	-	-	-	-
1	Recirc Manifold A		NOTE:CC	OWN	-	-	-	-	-	-	-	-	-	-	-	-
				PRE	-	-	-	-	-	-	-	-	-	-	-	-
B-J	102042		ISI-97005-B	ISI	-	-	-	-	-	-	-	-	-	-	-	-
B9.10	W-12 LS U&D		Tee-to-Reducer	AUG	-	-	-	-	-	-	-	-	-	-	-	-
1	Recirc Manifold A			OWN	-	-	-	-	-	-	-	-	-	-	-	-
				PRE	-	-	-	-	-	-	-	-	-	-	-	-
B-J	102043		ISI-97005-B	ISI	-	-	-	-	-	-	-	-	-	-	-	-
B9.10	W-13 LS U&D		Reducer-to-Pipe	AUG	-	-	-	-	-	-	-	-	-	-	-	-
1	Recirc Manifold A			OWN	-	-	-	-	-	-	-	-	-	-	-	-
				PRE	-	-	-	-	-	-	-	-	-	-	-	-
B-J	102044		ISI-97005-B	ISI	-	-	-	-	-	-	-	-	-	-	-	-
B9.10	W-14 LS U&D		Pipe-to-Elbow	AUG	-	-	-	-	-	-	-	-	-	-	-	-
1	Recirc Manifold A			OWN	-	-	-	-	-	-	-	-	-	-	-	-
				PRE	-	-	-	-	-	-	-	-	-	-	-	-
B-J	102045	ISI/PT/ISI-PT-1	ISI-97005-B	ISI	-	-	-	-	-	-	-	-	s	-	-	-
B9.10	W-15 LS U&D	ISI/UT/ISI-UT-16	Elbow-to-Pipe	AUG	-	-	-	-	-	-	-	-	-	-	-	-
1	Recirc Manifold A			OWN	-	-	-	-	-	-	-	-	-	-	-	-
				PRE	-	-	-	-	-	-	-	-	-	-	-	-
B-J	102046	ISI/PT/ISI-PT-1	ISI-97005-B	ISI	-	-	-	-	-	-	-	-	s	-	-	-
B9.10	W-16 LS U	ISI/UT/ISI-UT-16	Pipe-to-Pipe	AUG	-	-	-	-	-	-	-	-	-	-	-	-
1	Recirc Manifold A			OWN	-	-	-	-	-	-	-	-	-	-	-	-
				PRE	-	-	-	-	-	-	-	-	-	-	-	-
B-J	102047		ISI-97005-B	ISI	-	-	-	-	-	-	-	-	-	-	-	-
B9.11	W-17		Pipe-to-Safe End	AUG	-	-	-	-	-	-	-	-	-	-	-	-
1	Recirc Manifold A			OWN	-	-	-	-	-	-	-	-	-	-	-	-
				PRE	-	-	-	-	-	-	-	-	-	-	-	-
B-F	102048	ISI/PT/ISI-PT-1	ISI-97005-B	ISI	-	-	-	-	-	-	-	-	s	-	-	-
B5.10	W-18	ISI/UT/ISI-UT-16	Safe End-to-Nozzle	AUG	-	-	-	-	-	-	-	-	-	-	-	-
1	Recirc Manifold A		NOTE:CC	OWN	-	-	-	-	-	-	-	-	-	-	-	-
				PRE	-	-	-	-	-	-	-	-	-	-	-	-
B-J	102049		ISI-97005-B	ISI	-	-	-	-	-	-	-	-	-	-	-	-
B9.10	W-19 LS D		Cross Pipe-to-Pipe	AUG	-	-	-	-	-	-	-	-	-	-	-	-
1	Recirc Manifold A			OWN	-	-	-	-	-	-	-	-	-	-	-	-
				PRE	-	-	-	-	-	-	-	-	-	-	-	-
B-J	102050		ISI-97005-B	ISI	-	-	-	-	-	-	-	-	-	-	-	-
B9.10	W-20 LS U&D		Pipe-to-Pipe	AUG	-	-	-	-	-	-	-	-	-	-	-	-
1	Recirc Manifold A			OWN	-	-	-	-	-	-	-	-	-	-	-	-
				PRE	-	-	-	-	-	-	-	-	-	-	-	-

MONTICELLO Nuclear Generating Plant
3rd Interval ISI Plan Rev. 3 June 1, 1992 to May 31, 2002

Category, ItemNO, Class	Summary / CompID / System	Scope / Method / Procedure	Iso No. Comp. Desc. Code Case /Note		Period 1				Period 2				Period 3			
					1	2	3	4	1	2	3	4	1	2	3	4
B-J	102051	ISI/PT/ISI-PT-1	ISI-97005-B	ISI	c	-	-	-	-	-	-	-	-	-	-	-
B9.10	W-21 LS U&D	ISI/UT/ISI-UT-16	Pipe-to-Tee	AUG	-	-	-	-	-	-	-	-	-	-	-	-
1	Recirc Manifold A			OWN	-	-	-	-	-	-	-	-	-	-	-	-
				PRE	-	-	-	-	-	-	-	-	-	-	-	-
B-J	102052		ISI-97005-B	ISI	-	-	-	-	-	-	-	-	-	-	-	-
B9.10	W-22 LS U&D		Tee-to-Pipe	AUG	-	-	-	-	-	-	-	-	-	-	-	-
1	Recirc Manifold A			OWN	-	-	-	-	-	-	-	-	-	-	-	-
				PRE	-	-	-	-	-	-	-	-	-	-	-	-
B-J	102053		ISI-97005-B	ISI	-	-	-	-	-	-	-	-	-	-	-	-
B9.10	W-23 LS U		Pipe-to-Pipe	AUG	-	-	-	-	-	-	-	-	-	-	-	-
1	Recirc Manifold A			OWN	-	-	-	-	-	-	-	-	-	-	-	-
				PRE	-	-	-	-	-	-	-	-	-	-	-	-
B-J	102054	ISI/PT/ISI-PT-1	ISI-97005-B	ISI	c	-	-	-	-	-	-	-	-	-	-	-
B9.11	W-24	ISI/UT/ISI-UT-16	Pipe-to-Safe End	AUG	-	-	-	-	-	-	-	-	-	-	-	-
1	Recirc Manifold A			OWN	-	-	-	-	-	-	-	-	-	-	-	-
				PRE	-	-	-	-	-	-	-	-	-	-	-	-
B-F	102055	ISI/PT/ISI-PT-1	ISI-97005-B	ISI	c	-	-	-	-	-	-	-	-	-	-	-
B5.10	W-25	ISI/UT/ISI-UT-16	Safe End-to-Nozzle	AUG	-	-	-	-	-	-	-	-	-	-	-	-
1	Recirc Manifold A		NOTE:CC	OWN	-	-	-	-	-	-	-	-	-	-	-	-
				PRE	-	-	-	-	-	-	-	-	-	-	-	-
B-J	102056		ISI-97005-B	ISI	-	-	-	-	-	-	-	-	-	-	-	-
B9.10	W-26 LS U&D		Tee-to-Reducer	AUG	-	-	-	-	-	-	-	-	-	-	-	-
1	Recirc Manifold A			OWN	-	-	-	-	-	-	-	-	-	-	-	-
				PRE	-	-	-	-	-	-	-	-	-	-	-	-
B-J	102057		ISI-97005-B	ISI	-	-	-	-	-	-	-	-	-	-	-	-
B9.10	W-27 LS U&D		Reducer-to-Pipe	AUG	-	-	-	-	-	-	-	-	-	-	-	-
1	Recirc Manifold A			OWN	-	-	-	-	-	-	-	-	-	-	-	-
				PRE	-	-	-	-	-	-	-	-	-	-	-	-
B-J	102058		ISI-97005-B	ISI	-	-	-	-	-	-	-	-	-	-	-	-
B9.10	W-28 LS U&D		Pipe-to-Elbow	AUG	-	-	-	-	-	-	-	-	-	-	-	-
1	Recirc Manifold A			OWN	-	-	-	-	-	-	-	-	-	-	-	-
				PRE	-	-	-	-	-	-	-	-	-	-	-	-
B-J	102059		ISI-97005-B	ISI	-	-	-	-	-	-	-	-	-	-	-	-
B9.10	W-29 LS U&D		Elbow-to-Pipe	AUG	-	-	-	-	-	-	-	-	-	-	-	-
1	Recirc Manifold A			OWN	-	-	-	-	-	-	-	-	-	-	-	-
				PRE	-	-	-	-	-	-	-	-	-	-	-	-
B-J	102060		ISI-97005-B	ISI	-	-	-	-	-	-	-	-	-	-	-	-
B9.10	W-30 LS U		Pipe-to-Pipe	AUG	-	-	-	-	-	-	-	-	-	-	-	-
1	Recirc Manifold A			OWN	-	-	-	-	-	-	-	-	-	-	-	-
				PRE	-	-	-	-	-	-	-	-	-	-	-	-

MONTICELLO Nuclear Generating Plant
3rd Interval ISI Plan Rev. 3 June 1, 1992 to May 31, 2002

Category, ItemNO, Class	Summary / CompID / System	Scope / Method / Procedure	Iso No. Comp. Desc. Code Case /Note		Period 1				Period 2				Period 3			
					1	2	3	4	1	2	3	4	1	2	3	4
B-J	102061	ISI/PT/ISI-PT-1	ISI-97005-B	ISI	-	-	-	-	-	-	-	-	-	s	-	-
B9.11	W-31	ISI/UT/ISI-UT-16	Pipe-to-Safe End	AUG	-	-	-	-	-	-	-	-	-	-	-	-
1	Recirc Manifold A			OWN	-	-	-	-	-	-	-	-	-	-	-	-
				PRE	-	-	-	-	-	-	-	-	-	-	-	-
B-F	102062	ISI/PT/ISI-PT-1	ISI-97005-B	ISI	-	-	-	-	-	-	-	-	-	s	-	-
B5.10	W-32	ISI/UT/ISI-UT-16	Safe End-to-Nozzle	AUG	-	-	-	-	-	-	-	-	-	-	-	-
1	Recirc Manifold A		NOTE:CC	OWN	-	-	-	-	-	-	-	-	-	-	-	-
				PRE	-	-	-	-	-	-	-	-	-	-	-	-
B-K-1	102063	ISI/PT/ISI-PT-1	ISI-97005-C	ISI	-	c	-	-	-	-	-	-	-	-	-	-
B10.20	H- 1	ISI/VT/ISI-VT-2.0	Rod / Clevis Grip	AUG	-	-	-	-	-	-	-	-	-	-	-	-
1	Recirc Pump A			OWN	-	-	-	-	-	-	-	-	-	-	-	-
				PRE	-	-	-	-	-	-	-	-	-	-	-	-
B-K-1	102064	ISI/MT/ISI-MT-1	ISI-97005-C	ISI	-	-	-	-	-	c	-	-	-	-	-	-
B10.20	H- 2	ISI/VT/ISI-VT-2.0	Rod / Clevis Grip	AUG	-	-	-	-	-	-	-	-	-	-	-	-
1	Recirc Pump A			OWN	-	-	-	-	-	-	-	-	-	-	-	-
				PRE	-	-	-	-	-	-	-	-	-	-	-	-
B-K-1	102065	ISI/PT/ISI-PT-1	ISI-97005-C	ISI	-	-	-	-	-	c	-	-	-	-	-	-
B10.20	H- 3	ISI/VT/ISI-VT-2.0	Rod / Clevis Grip	AUG	-	-	-	-	-	-	-	-	-	-	-	-
1	Recirc Pump A			OWN	-	-	-	-	-	-	-	-	-	-	-	-
				PRE	-	-	-	-	-	-	-	-	-	-	-	-
B-K-1	102066	ISI/MT/ISI-MT-1	ISI-97005-C	ISI	c	-	-	-	-	-	-	-	-	-	-	-
B10.20	H- 4	ISI/VT/ISI-VT-2.0	Snubber / Lugs	AUG	-	-	-	-	-	-	-	-	-	-	-	-
1	Recirc Pump A			OWN	-	-	-	-	-	-	-	-	-	-	-	-
				PRE	-	-	-	-	-	-	-	-	-	-	-	-
B-K-1	102067	ISI/PT/ISI-PT-1	ISI-97005-C	ISI	c	-	-	-	-	B	-	-	-	-	-	-
B10.20	H- 5	ISI/VT/ISI-VT-2.0	Snubber / Lugs	AUG	-	-	-	-	-	-	-	-	-	-	-	-
1	Recirc Pump A			OWN	-	-	-	-	-	-	-	-	-	-	-	-
				PRE	-	-	-	-	-	-	-	-	-	-	-	-
B-K-1	102068	PSI/VT/ISI-VT-2.0	ISI-97005-C	ISI	-	c	-	-	-	-	-	-	b	-	-	-
B10.20	H- 6	ISI/PT/ISI-PT-1	Snubber / Lugs	AUG	-	-	-	-	-	-	-	-	-	-	-	-
1	Recirc Pump A	ISI/VT/ISI-VT-2.0		OWN	-	-	-	-	-	-	-	-	-	-	-	-
				PRE	-	-	-	-	-	-	-	-	-	-	-	-
B-K-1	102069	ISI/PT/ISI-PT-1	ISI-97005-C	ISI	-	c	-	-	-	B	-	-	-	b	-	-
B10.20	H- 7	ISI/VT/ISI-VT-2.0	Snubber / Lugs	AUG	-	-	-	-	-	-	-	-	-	-	-	-
1	Recirc Pump A			OWN	-	-	-	-	-	-	-	-	-	-	-	-
				PRE	-	-	-	-	-	-	-	-	-	-	-	-
B-K-1	102071	ISI/VT/ISI-VT-2.0	ISI-97005-C	ISI	-	c	-	-	-	B	-	-	b	-	-	-
B10.20	H- 8	ISI/PT/ISI-PT-1	Snubber / Lugs	AUG	-	-	-	-	-	-	-	-	-	-	-	-
1	Recirc Pump A			OWN	-	-	-	-	-	-	-	-	-	-	-	-
				PRE	-	-	-	-	-	-	-	-	-	-	-	-

MONTICELLO Nuclear Generating Plant
3rd Interval ISI Plan Rev. 3 June 1, 1992 to May 31, 2002

Category, ItemNO, Class	Summary / CompID / System	Scope / Method / Procedure	Iso No. Comp. Desc. Code Case /Note		Period 1				Period 2				Period 3			
					1	2	3	4	1	2	3	4	1	2	3	4
B-K-1	102072	ISI/VT/ISI-VT-2.0	ISI-97005-C	ISI	-	c	-	-	-	B	-	-	b	-	-	-
B10.20	H- 9	ISI/PT/ISI-PT-1	Snubber / Lugs	AUG	-	-	-	-	-	-	-	-	-	-	-	-
1	Recirc Pump A			OWN	-	-	-	-	-	-	-	-	-	-	-	-
				PRE	-	-	-	-	-	-	-	-	-	-	-	-
F-B	102074	ISI/VT/ISI-VT-2.0	ISI-97005-C	ISI	c	-	-	-	-	-	-	-	-	b	-	-
F-A,B,C	H-10		Restraint	AUG	-	-	-	-	-	-	-	-	-	-	-	-
1	Recirculation A			OWN	-	-	-	-	-	-	-	-	-	-	-	-
				PRE	-	-	-	-	-	-	-	-	-	-	-	-
B-G-2	102075	ISI/VT/ISI-VT-1.0	ISI-97006-A	ISI	-	-	-	-	-	c	-	-	-	-	-	-
B7.70	B- 1		Bolts	AUG	-	-	-	-	-	-	-	-	-	-	-	-
1	Recirculation B			OWN	-	-	-	-	-	-	-	-	-	-	-	-
				PRE	-	-	-	-	-	-	-	-	-	-	-	-
B-G-1	102076	ISI/UT/ISI-UT-4C	ISI-97006-A	ISI	c	-	-	-	-	-	-	-	-	-	-	-
B6.180	B- 2		RC Pump B Studs	AUG	-	-	-	-	-	-	-	-	-	-	-	-
1	Recirculation B			OWN	-	-	-	-	-	-	-	-	-	-	-	-
				PRE	-	-	-	-	-	-	-	-	-	-	-	-
B-G-2	102077	ISI/VT/ISI-VT-1.0	ISI-97006-A	ISI	c	-	-	-	-	-	-	-	-	-	-	-
B7.50	B- 3		Flange Bolts @ W-16	AUG	-	-	-	-	-	-	-	-	-	-	-	-
1	Recirculation B			OWN	-	-	-	-	-	-	-	-	-	-	-	-
				PRE	-	-	-	-	-	-	-	-	-	-	-	-
B-G-2	102078	ISI/VT/ISI-VT-1.0	ISI-97006-A	ISI	c	-	-	-	-	-	-	-	-	-	-	-
B7.70	B- 4		Bolts	AUG	-	-	-	-	-	-	-	-	-	-	-	-
1	Recirculation B			OWN	-	-	-	-	-	-	-	-	-	-	-	-
				PRE	-	-	-	-	-	-	-	-	-	-	-	-
F-B	102079	ISI/VT/ISI-VT-2.0	ISI-97006-A	ISI	-	-	-	-	-	c	-	-	b	-	-	-
F-A,B,C	H- 1		Restraint	AUG	-	-	-	-	-	-	-	-	-	-	-	-
1	Recirculation B			OWN	-	-	-	-	-	-	-	-	-	-	-	-
				PRE	-	-	-	-	-	-	-	-	-	-	-	-
F-C	102080	ISI/VT/ISI-VT-2.0	ISI-97006-A	ISI	c	-	-	-	-	B	-	-	-	-	-	-
F-A,B,C	H- 2		Sway Brace	AUG	-	-	-	-	-	-	-	-	-	-	-	-
1	Recirculation B			OWN	-	-	-	-	-	-	-	-	-	-	-	-
				PRE	-	-	-	-	-	-	-	-	-	-	-	-
B-K-1	102081	ISI/PT/ISI-PT-1	ISI-97006-A	ISI	c	-	-	-	-	B	-	-	-	-	-	-
B10.10	H- 3	ISI/VT/ISI-VT-2.0	Dbl Spring / 4 Lugs	AUG	-	-	-	-	-	-	-	-	-	-	-	-
1	Recirculation B			OWN	-	-	-	-	-	-	-	-	-	-	-	-
				PRE	-	-	-	-	-	-	-	-	-	-	-	-
B-K-1	102082	ISI/PT/ISI-PT-1	ISI-97006-A	ISI	-	-	-	-	-	c	-	-	-	-	-	-
B10.10	H- 5	ISI/VT/ISI-VT-2.0	Clevis / Lugs	AUG	-	-	-	-	-	-	-	-	-	-	-	-
1	Recirculation B			OWN	-	-	-	-	-	-	-	-	-	-	-	-
				PRE	-	-	-	-	-	-	-	-	-	-	-	-

MONTICELLO Nuclear Generating Plant
3rd Interval ISI Plan Rev. 3 June 1, 1992 to May 31, 2002

Category, ItemNO, Class	Summary / CompID / System	Scope / Method / Procedure	Iso No. Comp. Desc. Code Case /Note		Period 1				Period 2				Period 3			
					1	2	3	4	1	2	3	4	1	2	3	4
B-M-2	102101		ISI-97006-A	ISI	-	-	-	-	-	-	-	-	-	-	-	-
B12.50	V- 2		Valve Int Surfaces	AUG	-	-	-	-	-	-	-	-	-	-	-	-
1	Recirculation B		NOTE:II, RELIEF 4	OWN	-	-	-	-	-	-	-	-	-	-	-	-
				PRE	-	-	-	-	-	-	-	-	-	-	-	-
B-F	102102	ISI/PT/ISI-PT-1	ISI-97006-A	ISI	-	-	-	-	-	-	-	-	-	s	-	-
B5.10	W- 1	ISI/UT/ISI-UT-16	Nozzle-to-Safe End	AUG	-	-	-	-	-	-	-	-	-	-	-	-
1	Recirculation B		NOTE:CC	OWN	-	-	-	-	-	-	-	-	-	-	-	-
				PRE	-	-	-	-	-	-	-	-	-	-	-	-
B-J	102103	ISI/PT/ISI-PT-1	ISI-97006-A	ISI	-	-	-	-	-	-	-	-	-	s	-	-
B9.10	W- 2 LS D	ISI/UT/ISI-UT-16	Safe End-to-Pipe	AUG	-	-	-	-	-	-	-	-	-	-	-	-
1	Recirculation B			OWN	-	-	-	-	-	-	-	-	-	-	-	-
				PRE	-	-	-	-	-	-	-	-	-	-	-	-
B-J	102104		ISI-97006-A	ISI	-	-	-	-	-	-	-	-	-	-	-	-
B9.10	W- 3 LS U&D		Pipe-to-Elbow	AUG	-	-	-	-	-	-	-	-	-	-	-	-
1	Recirculation B			OWN	-	-	-	-	-	-	-	-	-	-	-	-
				PRE	-	-	-	-	-	-	-	-	-	-	-	-
B-J	102105		ISI-97006-A	ISI	-	-	-	-	-	-	-	-	-	-	-	-
B9.11	W- 4 LS U&D		Elbow-to-Pipe	AUG	-	-	-	-	-	-	-	-	-	-	-	-
1	Recirculation B			OWN	-	-	-	-	-	-	-	-	-	-	-	-
				PRE	-	-	-	-	-	-	-	-	-	-	-	-
B-J	102106	ISI/PT/ISI-PT-1	ISI-97006-A	ISI	-	-	-	-	-	-	-	-	s	-	-	-
B9.31	W- 5 LS U&D	ISI/UT/ISI-UT-16	Pipe-to-Branch	AUG	-	-	-	-	-	-	-	-	-	-	-	-
1	Recirculation B			OWN	-	-	-	-	-	-	-	-	-	-	-	-
				PRE	-	-	-	-	-	-	-	-	-	-	-	-
B-J	102107		ISI-97006-A	ISI	-	-	-	-	-	-	-	-	-	-	-	-
B9.10	W- 6 LS U&D		Pipe-to-Pipe	AUG	-	-	-	-	-	-	-	-	-	-	-	-
1	Recirculation B			OWN	-	-	-	-	-	-	-	-	-	-	-	-
				PRE	-	-	-	-	-	-	-	-	-	-	-	-
B-J	102108		ISI-97006-A	ISI	-	-	-	-	-	-	-	-	-	-	-	-
B9.10	W- 7 LS U&D		Pipe-to-Pipe	AUG	-	-	-	-	-	-	-	-	-	-	-	-
1	Recirculation B			OWN	-	-	-	-	-	-	-	-	-	-	-	-
				PRE	-	-	-	-	-	-	-	-	-	-	-	-
B-J	102109		ISI-97006-A	ISI	-	-	-	-	-	-	-	-	-	-	-	-
B9.10	W- 8 LS U&D		Pipe-to-Bent Pipe	AUG	-	-	-	-	-	-	-	-	-	-	-	-
1	Recirculation B			OWN	-	-	-	-	-	-	-	-	-	-	-	-
				PRE	-	-	-	-	-	-	-	-	-	-	-	-
B-J	102110		ISI-97006-A	ISI	-	-	-	-	-	-	-	-	-	-	-	-
B9.10	W- 9 LS U		Bent Pipe-to-Valve	AUG	-	-	-	-	-	-	-	-	-	-	-	-
1	Recirculation B			OWN	-	-	-	-	-	-	-	-	-	-	-	-
				PRE	-	-	-	-	-	-	-	-	-	-	-	-

MONTICELLO Nuclear Generating Plant
3rd Interval ISI Plan Rev. 3 June 1, 1992 to May 31, 2002

Category, ItemNO, Class	Summary / CompID / System	Scope / Method / Procedure	Iso No. Comp. Desc. Code Case /Note		Period 1				Period 2				Period 3			
					1	2	3	4	1	2	3	4	1	2	3	4
F-B	102085	ISI/VT/ISI-VT-2.0	ISI-97006-A	ISI	c	-	-	-	-	-	-	-	-	-	-	-
F-A,B,C	H- 4		Restraint	AUG	-	-	-	-	-	-	-	-	-	-	-	-
1	Recirculation B			OWN	-	-	-	-	-	-	-	-	-	-	-	-
				PRE	-	-	-	-	-	-	-	-	-	-	-	-
B-K-1	102087	ISI/PT/ISI-PT-1	ISI-97006-A	ISI	-	-	-	-	-	c	-	-	-	-	-	-
B10.10	H- 6	ISI/VT/ISI-VT-2.0	Clevis / Lugs	AUG	-	-	-	-	-	-	-	-	-	-	-	-
1	Recirculation B			OWN	-	-	-	-	-	-	-	-	-	-	-	-
				PRE	-	-	-	-	-	-	-	-	-	-	-	-
B-K-1	102089	ISI/PT/ISI-PT-1	ISI-97006-A	ISI	c	-	-	-	-	-	-	-	-	-	-	-
B10.10	H- 7	ISI/VT/ISI-VT-2.0	Dbl Spring / Lugs	AUG	-	-	-	-	-	-	-	-	-	-	-	-
1	Recirculation B			OWN	-	-	-	-	-	-	-	-	-	-	-	-
				PRE	-	-	-	-	-	-	-	-	-	-	-	-
B-K-1	102090	ISI/PT/ISI-PT-1	ISI-97006-A	ISI	c	B	-	-	-	B	-	-	-	-	-	-
B10.10	H- 8	ISI/VT/ISI-VT-2.0	Snubber / Lugs	AUG	-	-	-	-	-	-	-	-	-	-	-	-
1	Recirculation B			OWN	-	-	-	-	-	-	-	-	-	-	-	-
				PRE	-	-	-	-	-	-	-	-	-	-	-	-
F-B	102092		ISI-97006-A	ISI	-	-	-	-	-	-	-	-	-	-	-	-
F-A,B,C	H- 9		Restraint	AUG	-	-	-	-	-	-	-	-	-	-	-	-
1	Recirculation B			OWN	-	-	-	-	-	-	-	-	-	-	-	-
				PRE	-	-	-	-	-	-	-	-	-	-	-	-
B-K-1	102093	ISI/PT/ISI-PT-1	ISI-97006-A	ISI	-	c	-	-	-	-	-	-	-	-	-	-
B10.10	H-10	ISI/VT/ISI-VT-2.0	Dbl Spring	AUG	-	-	-	-	-	-	-	-	-	-	-	-
1	Recirculation B			OWN	-	-	-	-	-	-	-	-	-	-	-	-
				PRE	-	-	-	-	-	-	-	-	-	-	-	-
F-C	102096	ISI/VT/ISI-VT-2.0	ISI-97006-A	ISI	-	c	-	-	-	B	-	-	-	-	-	-
F-A,B,C	H-11		Sway Brace	AUG	-	-	-	-	-	-	-	-	-	-	-	-
1	Recirculation B			OWN	-	-	-	-	-	-	-	-	-	-	-	-
				PRE	-	-	-	-	-	-	-	-	-	-	-	-
F-B	102098	ISI/VT/ISI-VT-2.0	ISI-97006-A	ISI	-	c	-	-	-	-	-	-	-	-	-	-
F-A,B,C	H-12		Restraint	AUG	-	-	-	-	-	-	-	-	-	-	-	-
1	Recirculation B			OWN	-	-	-	-	-	-	-	-	-	-	-	-
				PRE	-	-	-	-	-	-	-	-	-	-	-	-
B-L-2	102099		ISI-97006-A	ISI	-	-	-	-	-	-	-	-	-	-	-	-
B12.20	P200-B		Pump	AUG	-	-	-	-	-	-	-	-	-	-	-	-
1	Recirculation B		NOTE: RELIEF 3	OWN	-	-	-	-	-	-	-	-	-	-	-	-
				PRE	-	-	-	-	-	-	-	-	-	-	-	-
B-M-2	102100		ISI-97006-A	ISI	-	-	-	-	-	-	-	-	-	-	-	-
B12.50	V- 1		Valve Int Surfaces	AUG	-	-	-	-	-	-	-	-	-	-	-	-
1	Recirculation B		NOTE:II, RELIEF 4	OWN	-	-	-	-	-	-	-	-	-	-	-	-
				PRE	-	-	-	-	-	-	-	-	-	-	-	-

MONTICELLO Nuclear Generating Plant
3rd Interval ISI Plan Rev. 3 June 1, 1992 to May 31, 2002

Category, ItemNO, Class	Summary / CompID / System	Scope / Method / Procedure	Iso No. Comp. Desc. Code Case /Note		Period 1				Period 2				Period 3			
					1	2	3	4	1	2	3	4	1	2	3	4
B-J	102121		ISI-97006-A	ISI	-	-	-	-	-	-	-	-	-	-	-	-
B9.10	W-20 LS U&D		Pipe-to-Pipe	AUG	-	-	-	-	-	-	-	-	-	-	-	-
1	Recirculation B			OWN	-	-	-	-	-	-	-	-	-	-	-	-
				PRE	-	-	-	-	-	-	-	-	-	-	-	-
B-J	102122		ISI-97006-A	ISI	-	-	-	-	-	-	-	-	-	-	-	-
B9.11	W-21 LS U&D		Pipe-to-Tee	AUG	-	-	-	-	-	-	-	-	-	-	-	-
1	Recirculation B			OWN	-	-	-	-	-	-	-	-	-	-	-	-
				PRE	-	-	-	-	-	-	-	-	-	-	-	-
B-J	102123		ISI-97006-A	ISI	-	-	-	-	-	-	-	-	-	-	-	-
B9.10	W-22 LS U&D		Tee-to-Cross Pipe	AUG	-	-	-	-	-	-	-	-	-	-	-	-
1	Recirculation B			OWN	-	-	-	-	-	-	-	-	-	-	-	-
				PRE	-	-	-	-	-	-	-	-	-	-	-	-
F-B	102124	ISI/VT/ISI-VT-2.0	ISI-97006-B	ISI	-	-	-	-	-	-	-	-	s	-	-	-
F-A,B,C	H- 1		Restraint	AUG	-	-	-	-	-	-	-	-	-	-	-	-
1	Recirc Manifold B			OWN	-	-	-	-	-	-	-	-	-	-	-	-
				PRE	-	-	-	-	-	-	-	-	-	-	-	-
B-K-1	102125	ISI/VT/ISI-VT-2.0	ISI-97006-B	ISI	-	c	-	-	-	B	-	-	b	-	-	-
B10.10	H- 2	ISI/PT/ISI-PT-1	Snubber / Lugs	AUG	-	-	-	-	-	-	-	-	-	-	-	-
1	Recirc Manifold B			OWN	-	-	-	-	-	-	-	-	-	-	-	-
				PRE	-	-	-	-	-	-	-	-	-	-	-	-
B-K-1	102127	ISI/PT/ISI-PT-1	ISI-97006-B	ISI	c	-	-	-	-	-	-	-	-	-	-	-
B10.10	H- 5	ISI/VT/ISI-VT-2.0	Spring / Lugs	AUG	-	-	-	-	-	-	-	-	-	-	-	-
1	Recirc Manifold B			OWN	-	-	-	-	-	-	-	-	-	-	-	-
				PRE	-	-	-	-	-	-	-	-	-	-	-	-
F-B	102130	ISI/VT/ISI-VT-2.0	ISI-97006-B	ISI	c	-	-	-	-	-	-	-	-	-	-	-
F-A,B,C	H- 4		Restraint	AUG	-	-	-	-	-	-	-	-	-	-	-	-
1	Recirc Manifold B			OWN	-	-	-	-	-	-	-	-	-	-	-	-
				PRE	-	-	-	-	-	-	-	-	-	-	-	-
F-B	102131	ISI/VT/ISI-VT-2.0	ISI-97006-B	ISI	-	-	-	-	-	-	-	-	s	-	-	-
F-A,B,C	H- 3		Restraint	AUG	-	-	-	-	-	-	-	-	-	-	-	-
1	Recirc Manifold B			OWN	-	-	-	-	-	-	-	-	-	-	-	-
				PRE	-	-	-	-	-	-	-	-	-	-	-	-
F-B	102132	ISI/VT/ISI-VT-2.0	ISI-97006-B	ISI	c	-	-	-	-	-	-	-	-	-	-	-
F-A,B,C	H- 6		Restraint	AUG	-	-	-	-	-	-	-	-	-	-	-	-
1	Recirc Manifold B			OWN	-	-	-	-	-	-	-	-	-	-	-	-
				PRE	-	-	-	-	-	-	-	-	-	-	-	-
F-B	102133	ISI/VT/ISI-VT-2.0	ISI-97006-B	ISI	c	-	-	-	-	-	-	-	-	-	-	-
F-A,B,C	H- 7		Restraint	AUG	-	-	-	-	-	-	-	-	-	-	-	-
1	Recirc Manifold B			OWN	-	-	-	-	-	-	-	-	-	-	-	-
				PRE	-	-	-	-	-	-	-	-	-	-	-	-

MONTICELLO Nuclear Generating Plant
3rd Interval ISI Plan Rev. 3 June 1, 1992 to May 31, 2002

Category, ItemNO, Class	Summary / CompID / System	Scope / Method / Procedure	Iso No. Comp. Desc. Code Case /Note		Period 1				Period 2				Period 3			
					1	2	3	4	1	2	3	4	1	2	3	4
B-J	102111		ISI-97006-A	ISI	-	-	-	-	-	-	-	-	-	-	-	-
B9.11	W-10 LS D		Valve-to-Pipe	AUG	-	-	-	-	-	-	-	-	-	-	-	-
1	Recirculation B			OWN	-	-	-	-	-	-	-	-	-	-	-	-
				PRE	-	-	-	-	-	-	-	-	-	-	-	-
B-J	102112	ISI/PT/ISI-PT-1	ISI-97006-A	ISI	-	-	-	-	-	c	-	-	-	-	-	-
B9.32	W-11		Pipe-to-Branch	AUG	-	-	-	-	-	-	-	-	-	-	-	-
1	Recirculation B			OWN	-	-	-	-	-	-	-	-	-	-	-	-
				PRE	-	-	-	-	-	-	-	-	-	-	-	-
B-J	102113		ISI-97006-A	ISI	-	-	-	-	-	-	-	-	-	-	-	-
B9.10	W-12 LS U&D		Pipe-to-Bent Pipe	AUG	-	-	-	-	-	-	-	-	-	-	-	-
1	Recirculation B			OWN	-	-	-	-	-	-	-	-	-	-	-	-
				PRE	-	-	-	-	-	-	-	-	-	-	-	-
B-J	102114		ISI-97006-A	ISI	-	-	-	-	-	-	-	-	-	-	-	-
B9.10	W-13 LS U		Bent Pipe-to-Pump	AUG	-	-	-	-	-	-	-	-	-	-	-	-
1	Recirculation B			OWN	-	-	-	-	-	-	-	-	-	-	-	-
				PRE	-	-	-	-	-	-	-	-	-	-	-	-
B-J	102115	ISI/PT/ISI-PT-1	ISI-97006-A	ISI	c	-	-	-	-	-	-	-	-	-	-	-
B9.10	W-14 LS D	ISI/UT/ISI-UT-16	Pump-to-Pipe	AUG	-	-	-	-	-	-	-	-	-	-	-	-
1	Recirculation B			OWN	-	-	-	-	-	-	-	-	-	-	-	-
				PRE	-	-	-	-	-	-	-	-	-	-	-	-
B-J	102116		ISI-97006-A	ISI	-	-	-	-	-	-	-	-	-	-	-	-
B9.32	W-15 LS U&D		Pipe-to-Branch	AUG	-	-	-	-	-	-	-	-	-	-	-	-
1	Recirculation B			OWN	-	-	-	-	-	-	-	-	-	-	-	-
				PRE	-	-	-	-	-	-	-	-	-	-	-	-
B-J	102117		ISI-97006-A	ISI	-	-	-	-	-	-	-	-	-	-	-	-
B9.40	W-16		Branch-to-Flange	AUG	-	-	-	-	-	-	-	-	-	-	-	-
1	Recirculation B			OWN	-	-	-	-	-	-	-	-	-	-	-	-
				PRE	-	-	-	-	-	-	-	-	-	-	-	-
B-J	102118	ISI/PT/ISI-PT-1	ISI-97006-A	ISI	c	-	-	-	-	-	-	-	-	-	-	-
B9.10	W-17 LS U	ISI/UT/ISI-UT-16	Pipe-to-Valve	AUG	-	-	-	-	-	-	-	-	-	-	-	-
1	Recirculation B			OWN	-	-	-	-	-	-	-	-	-	-	-	-
				PRE	-	-	-	-	-	-	-	-	-	-	-	-
B-J	102119	ISI/PT/ISI-PT-1	ISI-97006-A	ISI	c	-	-	-	-	-	-	-	-	-	-	-
B9.10	W-18 LS D	ISI/UT/ISI-UT-16	Valve-to-Bent Pipe	AUG	-	-	-	-	-	-	-	-	-	-	-	-
1	Recirculation B			OWN	-	-	-	-	-	-	-	-	-	-	-	-
				PRE	-	-	-	-	-	-	-	-	-	-	-	-
B-J	102120	ISI/PT/ISI-PT-1	ISI-97006-A	ISI	c	-	-	-	-	-	-	-	-	-	-	-
B9.10	W-19 LS U&D	ISI/UT/ISI-UT-16	Elbow-to-Pipe	AUG	-	-	-	-	-	-	-	-	-	-	-	-
1	Recirculation B			OWN	-	-	-	-	-	-	-	-	-	-	-	-
				PRE	-	-	-	-	-	-	-	-	-	-	-	-

MONTICELLO Nuclear Generating Plant
3rd Interval ISI Plan Rev. 3 June 1, 1992 to May 31, 2002

Category, ItemNO, Class	Summary / CompID / System	Scope / Method / Procedure	Iso No. Comp. Desc. Code Case /Note		Period 1				Period 2				Period 3			
					1	2	3	4	1	2	3	4	1	2	3	4
B-J	102144		ISI-97006-B	ISI	-	-	-	-	-	-	-	-	-	-	-	-
B9.10	W- 5 LS D		Cross Pipe-to-Pipe	AUG	-	-	-	-	-	-	-	-	-	-	-	-
1	Recirc Manifold B			OWN	-	-	-	-	-	-	-	-	-	-	-	-
				PRE	-	-	-	-	-	-	-	-	-	-	-	-
B-J	102145		ISI-97006-B	ISI	-	-	-	-	-	-	-	-	-	-	-	-
B9.10	W- 6 LS U&D		Pipe-to-Pipe	AUG	-	-	-	-	-	-	-	-	-	-	-	-
1	Recirc Manifold B			OWN	-	-	-	-	-	-	-	-	-	-	-	-
				PRE	-	-	-	-	-	-	-	-	-	-	-	-
B-J	102146		ISI-97006-B	ISI	-	-	-	-	-	-	-	-	-	-	-	-
B9.10	W- 7 LS U&D		Pipe-to-Tee	AUG	-	-	-	-	-	-	-	-	-	-	-	-
1	Recirc Manifold B			OWN	-	-	-	-	-	-	-	-	-	-	-	-
				PRE	-	-	-	-	-	-	-	-	-	-	-	-
B-J	102147		ISI-97006-B	ISI	-	-	-	-	-	-	-	-	-	-	-	-
B9.10	W- 8 LS U&D		Tee-to-Pipe	AUG	-	-	-	-	-	-	-	-	-	-	-	-
1	Recirc Manifold B			OWN	-	-	-	-	-	-	-	-	-	-	-	-
				PRE	-	-	-	-	-	-	-	-	-	-	-	-
B-J	102148		ISI-97006-B	ISI	-	-	-	-	-	-	-	-	-	-	-	-
B9.10	W- 9 LS U		Pipe-to-Pipe	AUG	-	-	-	-	-	-	-	-	-	-	-	-
1	Recirc Manifold B			OWN	-	-	-	-	-	-	-	-	-	-	-	-
				PRE	-	-	-	-	-	-	-	-	-	-	-	-
B-J	102149		ISI-97006-B	ISI	-	-	-	-	-	-	-	-	-	-	-	-
B9.11	W-10		Pipe-to-Safe End	AUG	-	-	-	-	-	-	-	-	-	-	-	-
1	Recirc Manifold B			OWN	-	-	-	-	-	-	-	-	-	-	-	-
				PRE	-	-	-	-	-	-	-	-	-	-	-	-
B-F	102150	ISI/PT/ISI-PT-1	ISI-97006-B	ISI	c	-	-	-	-	-	-	-	-	-	-	-
B5.10	W-11	ISI/UT/ISI-UT-16	Safe End-to-Nozzle	AUG	-	-	-	-	-	-	-	-	-	-	-	-
1	Recirc Manifold B		NOTE:CC	OWN	-	-	-	-	-	-	-	-	-	-	-	-
				PRE	-	-	-	-	-	-	-	-	-	-	-	-
B-J	102151	ISI/PT/ISI-PT-1	ISI-97006-B	ISI	c	-	-	-	-	-	-	-	-	-	-	-
B9.10	W-12 LS U&D	ISI/UT/ISI-UT-16	Tee-to-Reducer	AUG	-	-	-	-	-	-	-	-	-	-	-	-
1	Recirc Manifold B			OWN	-	-	-	-	-	-	-	-	-	-	-	-
				PRE	-	-	-	-	-	-	-	-	-	-	-	-
B-J	102152	ISI/PT/ISI-PT-1	ISI-97006-B	ISI	c	-	-	-	-	-	-	-	-	-	-	-
B9.11	W-13 LS U&D	ISI/UT/ISI-UT-16	Reducer-to-Pipe	AUG	-	-	-	-	-	-	-	-	-	-	-	-
1	Recirc Manifold B			OWN	-	-	-	-	-	-	-	-	-	-	-	-
				PRE	-	-	-	-	-	-	-	-	-	-	-	-
B-J	102153	ISI/PT/ISI-PT-1	ISI-97006-B	ISI	c	-	-	-	-	-	-	-	-	-	-	-
B9.11	W-14 LS U&D	ISI/UT/ISI-UT-16	Pipe-to-Elbow	AUG	-	-	-	-	-	-	-	-	-	-	-	-
1	Recirc Manifold B			OWN	-	-	-	-	-	-	-	-	-	-	-	-
				PRE	-	-	-	-	-	-	-	-	-	-	-	-

MONTICELLO Nuclear Generating Plant
3rd Interval ISI Plan Rev. 3 June 1, 1992 to May 31, 2002

Category, ItemNO, Class	Summary / CompID / System	Scope / Method / Procedure	Iso No. Comp. Desc. Code Case /Note		Period 1				Period 2				Period 3			
					1	2	3	4	1	2	3	4	1	2	3	4
F-B	102134		ISI-97006-B	ISI	-	-	-	-	-	-	-	-	-	-	-	-
F-A,B,C	H- 8		Restraint	AUG	-	-	-	-	-	-	-	-	-	-	-	-
1	Recirc Manifold B			OWN	-	-	-	-	-	-	-	-	-	-	-	-
				PRE	-	-	-	-	-	-	-	-	-	-	-	-
F-B	102135	ISI/VT/ISI-VT-2.0	ISI-97006-B	ISI	c	-	-	-	-	-	-	-	-	-	-	-
F-A,B,C	H- 9		Restraint	AUG	-	-	-	-	-	-	-	-	-	-	-	-
1	Recirc Manifold B			OWN	-	-	-	-	-	-	-	-	-	-	-	-
				PRE	-	-	-	-	-	-	-	-	-	-	-	-
B-K-1	102136		ISI-97006-B	ISI	-	-	-	-	-	-	-	-	-	-	-	-
B10.10	H-10		Spring / Lugs	AUG	-	-	-	-	-	-	-	-	-	-	-	-
1	Recirc Manifold B			OWN	-	-	-	-	-	-	-	-	-	-	-	-
				PRE	-	-	-	-	-	-	-	-	-	-	-	-
F-B	102137	ISI/VT/ISI-VT-2.0	ISI-97006-B	ISI	-	c	-	-	-	-	-	-	-	-	-	-
F-A,B,C	H-11		Restraint	AUG	-	-	-	-	-	-	-	-	-	-	-	-
1	Recirc Manifold B			OWN	-	-	-	-	-	-	-	-	-	-	-	-
				PRE	-	-	-	-	-	-	-	-	-	-	-	-
B-K-1	102138	ISI/PT/ISI-PT-1	ISI-97006-B	ISI	c	B	-	-	-	B	-	-	-	-	-	-
B10.10	H-12	ISI/VT/ISI-VT-2.0	Snubber	AUG	-	-	-	-	-	-	-	-	-	-	-	-
1	Recirc Manifold B			OWN	-	-	-	-	-	-	-	-	-	-	-	-
				PRE	-	-	-	-	-	-	-	-	-	-	-	-
F-B	102139	ISI/VT/ISI-VT-2.0	ISI-97006-B	ISI	-	-	-	-	-	-	-	-	-	s	-	-
F-A,B,C	H-13		Restraint	AUG	-	-	-	-	-	-	-	-	-	-	-	-
1	Recirc Manifold B			OWN	-	-	-	-	-	-	-	-	-	-	-	-
				PRE	-	-	-	-	-	-	-	-	-	-	-	-
B-J	102140		ISI-97006-B	ISI	-	-	-	-	-	-	-	-	-	-	-	-
B9.10	W- 1 LS U&D		Cross Pipe-to-Reduce	AUG	-	-	-	-	-	-	-	-	-	-	-	-
1	Recirc Manifold B			OWN	-	-	-	-	-	-	-	-	-	-	-	-
				PRE	-	-	-	-	-	-	-	-	-	-	-	-
B-J	102141		ISI-97006-B	ISI	-	-	-	-	-	-	-	-	-	-	-	-
B9.10	W- 2 LS U		Reducer-to-Pipe	AUG	-	-	-	-	-	-	-	-	-	-	-	-
1	Recirc Manifold B			OWN	-	-	-	-	-	-	-	-	-	-	-	-
				PRE	-	-	-	-	-	-	-	-	-	-	-	-
B-J	102142		ISI-97006-B	ISI	-	-	-	-	-	-	-	-	-	-	-	-
B9.11	W- 3		Pipe-to-Safe End	AUG	-	-	-	-	-	-	-	-	-	-	-	-
1	Recirc Manifold B			OWN	-	-	-	-	-	-	-	-	-	-	-	-
				PRE	-	-	-	-	-	-	-	-	-	-	-	-
B-F	102143	ISI/PT/ISI-PT-1	ISI-97006-B	ISI	-	-	-	-	-	-	-	-	s	-	-	-
B5.10	W- 4	ISI/UT/ISI-UT-16	Safe End-to-Nozzle	AUG	-	-	-	-	-	-	-	-	-	-	-	-
1	Recirc Manifold B		NOTE:CC	OWN	-	-	-	-	-	-	-	-	-	-	-	-
				PRE	-	-	-	-	-	-	-	-	-	-	-	-

MONTICELLO Nuclear Generating Plant
3rd Interval ISI Plan Rev. 3 June 1, 1992 to May 31, 2002

Category, ItemNO, Class	Summary / CompID / System	Scope / Method / Procedure	Iso No. Comp. Desc. Code Case /Note		Period 1				Period 2				Period 3			
					1	2	3	4	1	2	3	4	1	2	3	4
B-F	102164	ISI/PT/ISI-PT-1	ISI-97006-B	ISI	-	-	-	-	-	-	-	-	-	S	-	-
B5.10	W-25	ISI/UT/ISI-UT-16	Safe End-to-Nozzle	AUG	-	-	-	-	-	-	-	-	-	-	-	-
1	Recirc Manifold B		NOTE:CC	OWN	-	-	-	-	-	-	-	-	-	-	-	-
				PRE	-	-	-	-	-	-	-	-	-	-	-	-
B-J	102165		ISI-97006-B	ISI	-	-	-	-	-	-	-	-	-	-	-	-
B9.10	W-26 LS U&D		Tee-to-Reducer	AUG	-	-	-	-	-	-	-	-	-	-	-	-
1	Recirc Manifold B			OWN	-	-	-	-	-	-	-	-	-	-	-	-
				PRE	-	-	-	-	-	-	-	-	-	-	-	-
B-J	102166		ISI-97006-B	ISI	-	-	-	-	-	-	-	-	-	-	-	-
B9.10	W-27 LS U&D		Reducer-to-Pipe	AUG	-	-	-	-	-	-	-	-	-	-	-	-
1	Recirc Manifold B			OWN	-	-	-	-	-	-	-	-	-	-	-	-
				PRE	-	-	-	-	-	-	-	-	-	-	-	-
B-J	102167		ISI-97006-B	ISI	-	-	-	-	-	-	-	-	-	-	-	-
B9.10	W-28 LS U&D		Pipe-to-Elbow	AUG	-	-	-	-	-	-	-	-	-	-	-	-
1	Recirc Manifold B			OWN	-	-	-	-	-	-	-	-	-	-	-	-
				PRE	-	-	-	-	-	-	-	-	-	-	-	-
B-J	102168		ISI-97006-B	ISI	-	-	-	-	-	-	-	-	-	-	-	-
B9.10	W-29 LS U&D		Elbow-to-Pipe	AUG	-	-	-	-	-	-	-	-	-	-	-	-
1	Recirc Manifold B			OWN	-	-	-	-	-	-	-	-	-	-	-	-
				PRE	-	-	-	-	-	-	-	-	-	-	-	-
B-J	102169		ISI-97006-B	ISI	-	-	-	-	-	-	-	-	-	-	-	-
B9.10	W-30 LS U		Pipe-to-Pipe	AUG	-	-	-	-	-	-	-	-	-	-	-	-
1	Recirc Manifold B			OWN	-	-	-	-	-	-	-	-	-	-	-	-
				PRE	-	-	-	-	-	-	-	-	-	-	-	-
B-J	102170		ISI-97006-B	ISI	-	-	-	-	-	-	-	-	-	-	-	-
B9.11	W-31		Pipe-to-Safe End	AUG	-	-	-	-	-	-	-	-	-	-	-	-
1	Recirc Manifold B			OWN	-	-	-	-	-	-	-	-	-	-	-	-
				PRE	-	-	-	-	-	-	-	-	-	-	-	-
B-F	102171	ISI/PT/ISI-PT-1	ISI-97006-B	ISI	-	-	-	-	-	-	-	-	-	S	-	-
B5.10	W-32	ISI/UT/ISI-UT-16	Safe End-to-Nozzle	AUG	-	-	-	-	-	-	-	-	-	-	-	-
1	Recirc Manifold B		NOTE:CC	OWN	-	-	-	-	-	-	-	-	-	-	-	-
				PRE	-	-	-	-	-	-	-	-	-	-	-	-
B-K-1	102172	ISI/PT/ISI-PT-1	ISI-97006-C	ISI	-	C	-	-	-	-	-	-	-	-	-	-
B10.20	H- 1	ISI/VT/ISI-VT-2.0	Rod/Clevis Grip/Lugs	AUG	-	-	-	-	-	-	-	-	-	-	-	-
1	Recirc Pump B			OWN	-	-	-	-	-	-	-	-	-	-	-	-
				PRE	-	-	-	-	-	-	-	-	-	-	-	-
B-K-1	102173	ISI/VT/ISI-VT-2.0	ISI-97006-C	ISI	-	-	-	-	-	-	-	-	S	-	-	-
B10.20	H- 2		Rod/Clevis Grip/Lugs	AUG	-	-	-	-	-	-	-	-	-	-	-	-
1	Recirc Pump B			OWN	-	-	-	-	-	-	-	-	-	-	-	-
				PRE	-	-	-	-	-	-	-	-	-	-	-	-

MONTICELLO Nuclear Generating Plant
3rd Interval ISI Plan Rev. 3 June 1, 1992 to May 31, 2002

Category, ItemNO, Class	Summary / CompID / System	Scope / Method / Procedure	Iso No. Comp. Desc. Code Case /Note		Period 1				Period 2				Period 3			
					1	2	3	4	1	2	3	4	1	2	3	4
B-J	102154		ISI-97006-B	ISI	-	-	-	-	-	-	-	-	-	-	-	-
B9.10	W-15 LS U&D		Elbow-to-Pipe	AUG	-	-	-	-	-	-	-	-	-	-	-	-
1	Recirc Manifold B			OWN	-	-	-	-	-	-	-	-	-	-	-	-
				PRE	-	-	-	-	-	-	-	-	-	-	-	-
B-J	102155		ISI-97006-B	ISI	-	-	-	-	-	-	-	-	-	-	-	-
B9.10	W-16 LS U		Pipe-to-Pipe	AUG	-	-	-	-	-	-	-	-	-	-	-	-
1	Recirc Manifold B			OWN	-	-	-	-	-	-	-	-	-	-	-	-
				PRE	-	-	-	-	-	-	-	-	-	-	-	-
B-J	102156		ISI-97006-B	ISI	-	-	-	-	-	-	-	-	-	-	-	-
B9.11	W-17		Pipe-to-Safe End	AUG	-	-	-	-	-	-	-	-	-	-	-	-
1	Recirc Manifold B			OWN	-	-	-	-	-	-	-	-	-	-	-	-
				PRE	-	-	-	-	-	-	-	-	-	-	-	-
B-F	102157	ISI/PT/ISI-PT-1	ISI-97006-B	ISI	c	-	-	-	-	-	-	-	-	-	-	-
B5.10	W-18	ISI/UT/ISI-UT-16	Safe End-to-Nozzle	AUG	-	-	-	-	-	-	-	-	-	-	-	-
1	Recirc Manifold B		NOTE:CC	OWN	-	-	-	-	-	-	-	-	-	-	-	-
				PRE	-	-	-	-	-	-	-	-	-	-	-	-
B-J	102158		ISI-97006-B	ISI	-	-	-	-	-	-	-	-	-	-	-	-
B9.10	W-19 LS D		Cross Pipe-to-Pipe	AUG	-	-	-	-	-	-	-	-	-	-	-	-
1	Recirc Manifold B			OWN	-	-	-	-	-	-	-	-	-	-	-	-
				PRE	-	-	-	-	-	-	-	-	-	-	-	-
B-J	102159		ISI-97006-B	ISI	-	-	-	-	-	-	-	-	-	-	-	-
B9.10	W-20 LS U&D		Pipe-to-Pipe	AUG	-	-	-	-	-	-	-	-	-	-	-	-
1	Recirc Manifold B			OWN	-	-	-	-	-	-	-	-	-	-	-	-
				PRE	-	-	-	-	-	-	-	-	-	-	-	-
B-J	102160	ISI/PT/ISI-PT-1	ISI-97006-B	ISI	-	c	-	-	-	-	-	-	-	-	-	-
B9.10	W-21 LS U&D	ISI/UT/ISI-UT-16	Pipe-to-Tee	AUG	-	-	-	-	-	-	-	-	-	-	-	-
1	Recirc Manifold B			OWN	-	-	-	-	-	-	-	-	-	-	-	-
				PRE	-	-	-	-	-	-	-	-	-	-	-	-
B-J	102161	ISI/PT/ISI-PT-1	ISI-97006-B	ISI	-	-	-	-	-	-	-	-	-	s	-	-
B9.10	W-22 LS U&D	ISI/UT/ISI-UT-16	Pipe-to-Pipe	AUG	-	-	-	-	-	-	-	-	-	-	-	-
1	Recirc Manifold B			OWN	-	-	-	-	-	-	-	-	-	-	-	-
				PRE	-	-	-	-	-	-	-	-	-	-	-	-
B-J	102162	ISI/PT/ISI-PT-1	ISI-97006-B	ISI	-	-	-	-	-	-	-	-	-	s	-	-
B9.10	W-23 LS U	ISI/UT/ISI-UT-16	Pipe-to-Pipe	AUG	-	-	-	-	-	-	-	-	-	-	-	-
1	Recirc Manifold B			OWN	-	-	-	-	-	-	-	-	-	-	-	-
				PRE	-	-	-	-	-	-	-	-	-	-	-	-
B-J	102163	ISI/PT/ISI-PT-1	ISI-97006-B	ISI	-	-	-	-	-	-	-	-	-	s	-	-
B9.10	W-24	ISI/UT/ISI-UT-16	Pipe-to-Safe End	AUG	-	-	-	-	-	-	-	-	-	-	-	-
1	Recirc Manifold B			OWN	-	-	-	-	-	-	-	-	-	-	-	-
				PRE	-	-	-	-	-	-	-	-	-	-	-	-

MONTICELLO Nuclear Generating Plant
3rd Interval ISI Plan Rev. 3 June 1, 1992 to May 31, 2002

Category, ItemNO, Class	Summary / CompID / System	Scope / Method / Procedure	Iso No. Comp. Desc. Code Case /Note		Period 1				Period 2				Period 3			
					1	2	3	4	1	2	3	4	1	2	3	4
B-J	102184		ISI-97007-A	ISI	-	-	-	-	-	-	-	-	-	-	-	-
B9.40	W- 3		Coupling-to-Pipe	AUG	-	-	-	-	-	-	-	-	-	-	-	-
1	Instrmt Nozzle N-11B			OWN	-	-	-	-	-	-	-	-	-	-	-	-
				PRE	-	-	-	-	-	-	-	-	-	-	-	-
B-J	102185		ISI-97007-A	ISI	-	-	-	-	-	-	-	-	-	-	-	-
B9.40	W- 4		Pipe-to-Coupling	AUG	-	-	-	-	-	-	-	-	-	-	-	-
1	Instrmt Nozzle N-11B			OWN	-	-	-	-	-	-	-	-	-	-	-	-
				PRE	-	-	-	-	-	-	-	-	-	-	-	-
B-J	102186		ISI-97007-A	ISI	-	-	-	-	-	-	-	-	-	-	-	-
B9.40	W- 5		Coupling-to-Pipe	AUG	-	-	-	-	-	-	-	-	-	-	-	-
1	Instrmt Nozzle N-11B			OWN	-	-	-	-	-	-	-	-	-	-	-	-
				PRE	-	-	-	-	-	-	-	-	-	-	-	-
B-J	102187		ISI-97007-A	ISI	-	-	-	-	-	-	-	-	-	-	-	-
B9.40	W- 6		Pipe-to-Tee	AUG	-	-	-	-	-	-	-	-	-	-	-	-
1	Instrmt Nozzle N-11B			OWN	-	-	-	-	-	-	-	-	-	-	-	-
				PRE	-	-	-	-	-	-	-	-	-	-	-	-
B-J	102188		ISI-97007-A	ISI	-	-	-	-	-	-	-	-	-	-	-	-
B9.40	W- 7		Tee-to-Reducer	AUG	-	-	-	-	-	-	-	-	-	-	-	-
1	Instrmt Nozzle N-11B			OWN	-	-	-	-	-	-	-	-	-	-	-	-
				PRE	-	-	-	-	-	-	-	-	-	-	-	-
B-F	102189	ISI/MT/ISI-PT-1	ISI-97008-A	ISI	c	-	-	-	-	-	-	-	-	-	-	-
B5.20	W- 1		Nozzle-to-Safe End	AUG	-	-	-	-	-	-	-	-	-	-	-	-
1	Instrmt Nozzle N-11A			OWN	-	-	-	-	-	-	-	-	-	-	-	-
				PRE	-	-	-	-	-	-	-	-	-	-	-	-
B-J	102190	ISI/PT/ISI-PT-1	ISI-97008-A	ISI	c	-	-	-	-	-	-	-	-	-	-	-
B9.40	W- 2		Safe End-to-Coupling	AUG	-	-	-	-	-	-	-	-	-	-	-	-
1	Instrmt Nozzle N-11A			OWN	-	-	-	-	-	-	-	-	-	-	-	-
				PRE	-	-	-	-	-	-	-	-	-	-	-	-
B-J	102191	ISI/PT/ISI-PT-1	ISI-97008-A	ISI	c	-	-	-	-	-	-	-	-	-	-	-
B9.40	W- 3		Coupling-to-Pipe	AUG	-	-	-	-	-	-	-	-	-	-	-	-
1	Instrmt Nozzle N-11A			OWN	-	-	-	-	-	-	-	-	-	-	-	-
				PRE	-	-	-	-	-	-	-	-	-	-	-	-
B-J	102192		ISI-97008-A	ISI	-	-	-	-	-	-	-	-	-	-	-	-
B9.40	W- 5		Tee-to-Reducer	AUG	-	-	-	-	-	-	-	-	-	-	-	-
1	Instrmt Nozzle N-11A			OWN	-	-	-	-	-	-	-	-	-	-	-	-
				PRE	-	-	-	-	-	-	-	-	-	-	-	-
B-J	102193		ISI-97008-A	ISI	-	-	-	-	-	-	-	-	-	-	-	-
B9.40	W- 4		Pipe-to-Tee	AUG	-	-	-	-	-	-	-	-	-	-	-	-
1	Instrmt Nozzle N-11A			OWN	-	-	-	-	-	-	-	-	-	-	-	-
				PRE	-	-	-	-	-	-	-	-	-	-	-	-

MONTICELLO Nuclear Generating Plant
3rd Interval ISI Plan Rev. 3 June 1, 1992 to May 31, 2002

Category, ItemNO, Class	Summary / CompID / System	Scope / Method / Procedure	Iso No. Comp. Desc. Code Case /Note		Period 1				Period 2				Period 3			
					1	2	3	4	1	2	3	4	1	2	3	4
B-K-1	102174	ISI/VT/ISI-VT-2.0	ISI-97006-C	ISI	-	-	-	-	-	-	-	-	s	-	-	-
B10.20	H- 3		Rod/Clevis Grip/Lugs	AUG	-	-	-	-	-	-	-	-	-	-	-	-
1	Recirc Pump B			OWN	-	-	-	-	-	-	-	-	-	-	-	-
				PRE	-	-	-	-	-	-	-	-	-	-	-	-
B-K-1	102175	ISI/MT/ISI-MT-1	ISI-97006-C	ISI	c	B	-	-	-	-	-	-	-	b	-	-
B10.20	H- 4	ISI/VT/ISI-VT-2.0	Snubber / Lugs	AUG	-	-	-	-	-	-	-	-	-	-	-	-
1	Recirc Pump B			OWN	-	-	-	-	-	-	-	-	-	-	-	-
				PRE	-	-	-	-	-	-	-	-	-	-	-	-
B-K-1	102176	ISI/MT/ISI-MT-1	ISI-97006-C	ISI	c	B	-	-	-	-	-	-	-	b	-	-
B10.20	H- 5	ISI/VT/ISI-VT-2.0	Snubber / Lugs	AUG	-	-	-	-	-	-	-	-	-	-	-	-
1	Recirc Pump B			OWN	-	-	-	-	-	-	-	-	-	-	-	-
				PRE	-	-	-	-	-	-	-	-	-	-	-	-
B-K-1	102177	ISI/VT/ISI-VT-2.0	ISI-97006-C	ISI	-	c	-	-	-	-	-	-	b	-	-	-
B10.20	H- 6	ISI/MT/ISI-MT-1	Snubber / Lugs	AUG	-	-	-	-	-	-	-	-	-	-	-	-
1	Recirc Pump B			OWN	-	-	-	-	-	-	-	-	-	-	-	-
				PRE	-	-	-	-	-	-	-	-	-	-	-	-
B-K-1	102178	ISI/MT/ISI-MT-1	ISI-97006-C	ISI	c	B	-	-	-	B	-	-	-	-	-	-
B10.20	H- 7	ISI/VT/ISI-VT-2.0	Snubber / Lugs	AUG	-	-	-	-	-	-	-	-	-	-	-	-
1	Recirc Pump B			OWN	-	-	-	-	-	-	-	-	-	-	-	-
				PRE	-	-	-	-	-	-	-	-	-	-	-	-
B-K-1	102179	ISI/MT/ISI-PT-1	ISI-97006-C	ISI	-	c	-	-	-	-	-	-	-	b	-	-
B10.20	H- 8	ISI/VT/ISI-VT-2.0	Snubber / Lugs	AUG	-	-	-	-	-	-	-	-	-	-	-	-
1	Recirc Pump B			OWN	-	-	-	-	-	-	-	-	-	-	-	-
				PRE	-	-	-	-	-	-	-	-	-	-	-	-
B-K-1	102180	ISI/PT/ISI-PT-1	ISI-97006-C	ISI	-	-	-	-	-	c	-	-	-	-	-	-
B10.20	H- 9	ISI/VT/ISI-VT-2.0	Snubber / Lugs	AUG	-	-	-	-	-	-	-	-	-	-	-	-
1	Recirc Pump B			OWN	-	-	-	-	-	-	-	-	-	-	-	-
				PRE	-	-	-	-	-	-	-	-	-	-	-	-
F-B	102181	ISI/VT/ISI-VT-2.0	ISI-97006-C	ISI	c	-	-	-	-	-	-	-	-	-	-	-
F-A,B,C	H-10		Restraint	AUG	-	-	-	-	-	-	-	-	-	-	-	-
1	Recirc Pump B			OWN	-	-	-	-	-	-	-	-	-	-	-	-
				PRE	-	-	-	-	-	-	-	-	-	-	-	-
B-F	102182	ISI/PT/ISI-PT-1	ISI-97007-A	ISI	-	c	-	-	-	-	-	-	-	-	-	-
B5.20	W- 1		Nozzle-to-Safe End	AUG	-	-	-	-	-	-	-	-	-	-	-	-
1	Instrmt Nozzle N-11B			OWN	-	-	-	-	-	-	-	-	-	-	-	-
				PRE	-	-	-	-	-	-	-	-	-	-	-	-
B-J	102183	ISI/MT/ISI-MT-1	ISI-97007-A	ISI	-	c	-	-	-	-	-	-	-	-	-	-
B9.40	W- 2		Safe End-to-Coupling	AUG	-	-	-	-	-	-	-	-	-	-	-	-
1	Instrmt Nozzle N-11B			OWN	-	-	-	-	-	-	-	-	-	-	-	-
				PRE	-	-	-	-	-	-	-	-	-	-	-	-

MONTICELLO Nuclear Generating Plant
3rd Interval ISI Plan Rev. 3 June 1, 1992 to May 31, 2002

Category, ItemNO, Class	Summary / CompID / System	Scope / Method / Procedure	Iso No. Comp. Desc. Code Case /Note		Period 1				Period 2				Period 3			
					1	2	3	4	1	2	3	4	1	2	3	4
B-J	102204		ISI-97027-A	ISI	-	-	-	-	-	-	-	-	-	-	-	-
B9.11	W- 7		Elbow-to-Pipe	AUG	-	-	-	-	-	-	-	-	-	-	-	-
1	RHR Equalizer			OWN	-	-	-	-	-	-	-	-	-	-	-	-
				PRE	-	-	-	-	-	-	-	-	-	-	-	-
B-J	102205		ISI-97027-A	ISI	-	-	-	-	-	-	-	-	-	-	-	-
B9.11	W- 8		Pipe-to-Elbow	AUG	-	-	-	-	-	-	-	-	-	-	-	-
1	RHR Equalizer			OWN	-	-	-	-	-	-	-	-	-	-	-	-
				PRE	-	-	-	-	-	-	-	-	-	-	-	-
B-J	102206	ISI/MT/ISI-MT-1	ISI-97027-A	ISI	-	-	-	-	-	C	-	-	-	-	-	-
B9.11	W- 9	ISI/RT/ISI-UT-1	Elbow-to-Pipe	AUG	-	-	-	-	-	-	-	-	-	-	-	-
1	RHR Equalizer			OWN	-	-	-	-	-	-	-	-	-	-	-	-
				PRE	-	-	-	-	-	-	-	-	-	-	-	-
B-J	102207		ISI-97027-A	ISI	-	-	-	-	-	-	-	-	-	-	-	-
B9.11	W-10		Pipe-to-Tee	AUG	-	-	-	-	-	-	-	-	-	-	-	-
1	RHR Equalizer			OWN	-	-	-	-	-	-	-	-	-	-	-	-
				PRE	-	-	-	-	-	-	-	-	-	-	-	-
B-J	102208		ISI-97027-A	ISI	-	-	-	-	-	-	-	-	-	-	-	-
B9.11	W-11		Tee-to-Pipe	AUG	-	-	-	-	-	-	-	-	-	-	-	-
1	RHR Equalizer			OWN	-	-	-	-	-	-	-	-	-	-	-	-
				PRE	-	-	-	-	-	-	-	-	-	-	-	-
B-J	102209		ISI-97027-A	ISI	-	-	-	-	-	-	-	-	-	-	-	-
B9.11	W-12		Pipe-to-Valve	AUG	-	-	-	-	-	-	-	-	-	-	-	-
1	RHR Equalizer			OWN	-	-	-	-	-	-	-	-	-	-	-	-
				PRE	-	-	-	-	-	-	-	-	-	-	-	-
B-J	102210		ISI-97027-A	ISI	-	-	-	-	-	-	-	-	-	-	-	-
B9.11	W-13		Valve to-Pipe	AUG	-	-	-	-	-	-	-	-	-	-	-	-
1	RHR Equalizer			OWN	-	-	-	-	-	-	-	-	-	-	-	-
				PRE	-	-	-	-	-	-	-	-	-	-	-	-
B-J	102211	ISI/MT/ISI-MT-1	ISI-97027-A	ISI	-	-	-	-	-	C	-	-	-	-	-	-
B9.11	W-14	ISI/UT/ISI-UT-1	Pipe-to-Elbow	AUG	-	-	-	-	-	-	-	-	-	-	-	-
1	RHR Equalizer			OWN	-	-	-	-	-	-	-	-	-	-	-	-
				PRE	-	-	-	-	-	-	-	-	-	-	-	-
B-J	102212	ISI/MT/ISI-MT-1	ISI-97027-A	ISI	-	-	-	-	-	C	-	-	-	-	-	-
B9.11	W-15	ISI/UT/ISI-UT-1	Pipe-to-Elbow	AUG	-	-	-	-	-	-	-	-	-	-	-	-
1	RHR Equalizer			OWN	-	-	-	-	-	-	-	-	-	-	-	-
				PRE	-	-	-	-	-	-	-	-	-	-	-	-
B-J	102213		ISI-97027-A	ISI	-	-	-	-	-	-	-	-	-	-	-	-
B9.11	W-16		Pipe-to-Weldolet	AUG	-	-	-	-	-	-	-	-	-	-	-	-
1	RHR Equalizer			OWN	-	-	-	-	-	-	-	-	-	-	-	-
				PRE	-	-	-	-	-	-	-	-	-	-	-	-

MONTICELLO Nuclear Generating Plant
3rd Interval ISI Plan Rev. 3 June 1, 1992 to May 31, 2002

Category, ItemNO, Class	Summary / CompID / System	Scope / Method / Procedure	Iso No. Comp. Desc. Code Case /Note		Period 1				Period 2				Period 3			
					1	2	3	4	1	2	3	4	1	2	3	4
F-C	102194	ISI/VT/ISI-VT-2.0	ISI-97027-A	ISI	c	-	-	-	-	-	-	-	-	-	-	-
F-A,B,C	H- 1		Spring / Clamp	AUG	-	-	-	-	-	-	-	-	-	-	-	-
1	RHR Equalizer			OWN	-	-	-	-	-	-	-	-	-	-	-	-
				PRE	-	-	-	-	-	-	-	-	-	-	-	-
F-B	102195	ISI/VT/ISI-VT-2.0	ISI-97027-A	ISI	-	-	-	-	-	c	-	-	-	-	-	-
F-A,B,C	H- 2		Snubber / Clamp	AUG	-	-	-	-	-	-	-	-	-	-	-	-
1	RHR Equalizer			OWN	-	-	-	-	-	-	-	-	-	-	-	-
				PRE	-	-	-	-	-	-	-	-	-	-	-	-
F-B	102196	ISI/VT/ISI-VT-2.0	ISI-97027-A	ISI	c	-	-	-	-	-	-	-	b	-	-	-
F-A,B,C	H- 3		Snubber / Clamp	AUG	-	-	-	-	-	-	-	-	-	-	-	-
1	RHR Equalizer			OWN	-	-	-	-	-	-	-	-	-	-	-	-
				PRE	-	-	-	-	-	-	-	-	-	-	-	-
F-C	102197	ISI/VT/ISI-VT-2.0	ISI-97027-A	ISI	-	-	-	-	-	-	-	-	s	-	-	-
F-A,B,C	H- 4		Spring / Clamp	AUG	-	-	-	-	-	-	-	-	-	-	-	-
1	RHR Equalizer			OWN	-	-	-	-	-	-	-	-	-	-	-	-
				PRE	-	-	-	-	-	-	-	-	-	-	-	-
B-J	102198		ISI-97027-A	ISI	-	-	-	-	-	-	-	-	-	-	-	-
B9.11	W- 1		Weldolet-to-Pipe	AUG	-	-	-	-	-	-	-	-	-	-	-	-
1	RHR Equalizer			OWN	-	-	-	-	-	-	-	-	-	-	-	-
				PRE	-	-	-	-	-	-	-	-	-	-	-	-
B-J	102199	ISI/MT/ISI-MT-1	ISI-97027-A	ISI	c	-	-	-	-	-	-	-	-	-	-	-
B9.11	W- 2	ISI/UT/ISI-UT-1	Pipe-to-Elbow	AUG	-	-	-	-	-	-	-	-	-	-	-	-
1	RHR Equalizer			OWN	-	-	-	-	-	-	-	-	-	-	-	-
				PRE	-	-	-	-	-	-	-	-	-	-	-	-
B-J	102200		ISI-97027-A	ISI	-	-	-	-	-	-	-	-	-	-	-	-
B9.11	W- 3		Elbow-to-Pipe	AUG	-	-	-	-	-	-	-	-	-	-	-	-
1	RHR Equalizer			OWN	-	-	-	-	-	-	-	-	-	-	-	-
				PRE	-	-	-	-	-	-	-	-	-	-	-	-
B-J	102201		ISI-97027-A	ISI	-	-	-	-	-	-	-	-	-	-	-	-
B9.11	W- 4		Pipe-to-Valve	AUG	-	-	-	-	-	-	-	-	-	-	-	-
1	RHR Equalizer			OWN	-	-	-	-	-	-	-	-	-	-	-	-
				PRE	-	-	-	-	-	-	-	-	-	-	-	-
B-J	102202		ISI-97027-A	ISI	-	-	-	-	-	-	-	-	-	-	-	-
B9.11	W- 5		Valve to Pipe	AUG	-	-	-	-	-	-	-	-	-	-	-	-
1	RHR Equalizer			OWN	-	-	-	-	-	-	-	-	-	-	-	-
				PRE	-	-	-	-	-	-	-	-	-	-	-	-
B-J	102203	ISI/MT/ISI-MT-1	ISI-97027-A	ISI	c	-	-	-	-	-	-	-	-	-	-	-
B9.11	W- 6	ISI/UT/ISI-UT-1	Pipe-to-Elbow	AUG	-	-	-	-	-	-	-	-	-	-	-	-
1	RHR Equalizer			OWN	-	-	-	-	-	-	-	-	-	-	-	-
				PRE	-	-	-	-	-	-	-	-	-	-	-	-

MONTICELLO Nuclear Generating Plant
3rd Interval ISI Plan Rev. 3 June 1, 1992 to May 31, 2002

Category, ItemNO, Class	Summary / CompID / System	Scope / Method / Procedure	Iso No. Comp. Desc. Code Case /Note		Period 1				Period 2				Period 3			
					1	2	3	4	1	2	3	4	1	2	3	4
B-J	102224		ISI-97027-A	ISI	-	-	-	-	-	-	-	-	-	-	-	-
B9.11	W-27		Elbow-to-Pipe	AUG	-	-	-	-	-	-	-	-	-	-	-	-
1	RHR Equalizer			OWN	-	-	-	-	-	-	-	-	-	-	-	-
				PRE	-	-	-	-	-	-	-	-	-	-	-	-
B-J	102225	ISI/MT/ISI-MT-1	ISI-97027-A	ISI	-	-	-	-	-	-	-	-	s	-	-	-
B9.11	W-28	ISI/UT/ISI-UT-1	Pipe-to-Elbow	AUG	-	-	-	-	-	-	-	-	-	-	-	-
1	RHR Equalizer			OWN	-	-	-	-	-	-	-	-	-	-	-	-
				PRE	-	-	-	-	-	-	-	-	-	-	-	-
B-J	102226		ISI-97027-A	ISI	-	-	-	-	-	-	-	-	-	-	-	-
B9.11	W-29		Elbow-to-Pipe	AUG	-	-	-	-	-	-	-	-	-	-	-	-
1	RHR Equalizer			OWN	-	-	-	-	-	-	-	-	-	-	-	-
				PRE	-	-	-	-	-	-	-	-	-	-	-	-
B-J	102227		ISI-97027-A	ISI	-	-	-	-	-	-	-	-	-	-	-	-
B9.11	W-30		Pipe-to-Tee	AUG	-	-	-	-	-	-	-	-	-	-	-	-
1	RHR Equalizer			OWN	-	-	-	-	-	-	-	-	-	-	-	-
				PRE	-	-	-	-	-	-	-	-	-	-	-	-
F-B	102228	ISI/VT/ISI-VT-2.0	nd-isi-100	ISI	-	-	-	-	-	E	-	-	s	-	-	-
F-A,B,C	SWH-180		Clevis	AUG	-	-	-	-	-	-	-	-	-	-	-	-
3	RHR SERVICE WATER			OWN	-	-	-	-	-	-	-	-	-	-	-	-
				PRE	-	-	-	-	-	-	-	-	-	-	-	-
F-B	102229	ISI/VT/ISI-VT-2.0	nd-isi-101	ISI	-	-	-	-	c	-	-	-	e	-	-	-
F-A,B,C	SR-563		Seismic Restraint	AUG	-	-	-	-	-	-	-	-	-	-	-	-
3	RHR SERVICE WATER			OWN	-	-	-	-	-	-	-	-	-	-	-	-
				PRE	-	-	-	-	-	-	-	-	-	-	-	-
F-B	102230	ISI/VT/ISI-VT-2.0	nd-isi-101	ISI	-	-	-	-	-	-	-	-	s	-	-	-
F-A,B,C	SR-81		Seismic Restraint	AUG	-	-	-	-	-	-	-	-	-	-	-	-
3	RHR SERVICE WATER			OWN	-	-	-	-	-	-	-	-	-	-	-	-
				PRE	-	-	-	-	-	-	-	-	-	-	-	-
F-B	102231	ISI/VT/ISI-VT-2.0	nd-isi-101	ISI	-	-	-	-	-	-	-	-	s	-	-	-
F-A,B,C	SS-562		Double Strut/Snubber	AUG	-	-	-	-	-	-	-	-	-	-	-	-
3	RHR SERVICE WATER			OWN	-	-	-	-	-	-	-	-	-	-	-	-
				PRE	-	-	-	-	-	-	-	-	-	-	-	-
F-A	102232		nd-isi-101	ISI	c	-	-	-	-	-	-	-	-	-	-	-
F-A,B,C	SWH-308		Base Plate	AUG	-	-	-	-	-	-	-	-	-	-	-	-
3	RHR SERVICE WATER			OWN	-	-	-	-	-	-	-	-	-	-	-	-
				PRE	-	-	-	-	-	-	-	-	-	-	-	-
F-A	102233		nd-isi-101	ISI	-	-	-	-	-	-	-	-	-	-	-	-
F-A,B,C	SWH-309		Base Plate	AUG	-	-	-	-	-	-	-	-	-	-	-	-
3	RHR SERVICE WATER			OWN	-	-	-	-	-	-	-	-	-	-	-	-
				PRE	-	-	-	-	-	-	-	-	-	-	-	-

MONTICELLO Nuclear Generating Plant
3rd Interval ISI Plan Rev. 3 June 1, 1992 to May 31, 2002

Category, ItemNO, Class	Summary / CompID / System	Scope / Method / Procedure	Iso No. Comp. Desc. Code Case /Note		Period 1				Period 2				Period 3			
					1	2	3	4	1	2	3	4	1	2	3	4
B-J	102214		ISI-97027-A	ISI	-	-	-	-	-	-	-	-	-	-	-	-
B9.11	W-17		Weldolet-to-Pipe	AUG	-	-	-	-	-	-	-	-	-	-	-	-
1	RHR Equalizer			OWN	-	-	-	-	-	-	-	-	-	-	-	-
				PRE	-	-	-	-	-	-	-	-	-	-	-	-
B-J	102215		ISI-97027-A	ISI	-	-	-	-	-	-	-	-	-	-	-	-
B9.11	W-18		Pipe-to-Elbow	AUG	-	-	-	-	-	-	-	-	-	-	-	-
1	RHR Equalizer			OWN	-	-	-	-	-	-	-	-	-	-	-	-
				PRE	-	-	-	-	-	-	-	-	-	-	-	-
B-J	102216	ISI/MT/ISI-MT-1	ISI-97027-A	ISI	-	-	-	-	-	-	-	-	S	-	-	-
B9.11	W-19	ISI/UT/ISI-UT-1	Elbow-to-Pipe	AUG	-	-	-	-	-	-	-	-	-	-	-	-
1	RHR Equalizer			OWN	-	-	-	-	-	-	-	-	-	-	-	-
				PRE	-	-	-	-	-	-	-	-	-	-	-	-
B-J	102217		ISI-97027-A	ISI	-	-	-	-	-	-	-	-	-	-	-	-
B9.11	W-20		Pipe-to-Elbow	AUG	-	-	-	-	-	-	-	-	-	-	-	-
1	RHR Equalizer			OWN	-	-	-	-	-	-	-	-	-	-	-	-
				PRE	-	-	-	-	-	-	-	-	-	-	-	-
B-J	102218		ISI-97027-A	ISI	-	-	-	-	-	-	-	-	-	-	-	-
B9.11	W-21		Elbow-to-Pipe	AUG	-	-	-	-	-	-	-	-	-	-	-	-
1	RHR Equalizer			OWN	-	-	-	-	-	-	-	-	-	-	-	-
				PRE	-	-	-	-	-	-	-	-	-	-	-	-
B-J	102219	ISI/MT/ISI-MT-1	ISI-97027-A	ISI	-	-	-	-	-	-	-	-	S	-	-	-
B9.11	W-22	ISI/UT/ISI-UT-1	Pipe-to-Elbow	AUG	-	-	-	-	-	-	-	-	-	-	-	-
1	RHR Equalizer			OWN	-	-	-	-	-	-	-	-	-	-	-	-
				PRE	-	-	-	-	-	-	-	-	-	-	-	-
B-J	102220		ISI-97027-A	ISI	-	-	-	-	-	-	-	-	-	-	-	-
B9.11	W-23		Elbow-to-Pipe	AUG	-	-	-	-	-	-	-	-	-	-	-	-
1	RHR Equalizer			OWN	-	-	-	-	-	-	-	-	-	-	-	-
				PRE	-	-	-	-	-	-	-	-	-	-	-	-
B-J	102221		ISI-97027-A	ISI	-	-	-	-	-	-	-	-	-	-	-	-
B9.11	W-24		Pipe-to-Valve	AUG	-	-	-	-	-	-	-	-	-	-	-	-
1	RHR Equalizer			OWN	-	-	-	-	-	-	-	-	-	-	-	-
				PRE	-	-	-	-	-	-	-	-	-	-	-	-
B-J	102222		ISI-97027-A	ISI	-	-	-	-	-	-	-	-	-	-	-	-
B9.11	W-25		Valve-to-Pipe	AUG	-	-	-	-	-	-	-	-	-	-	-	-
1	RHR Equalizer			OWN	-	-	-	-	-	-	-	-	-	-	-	-
				PRE	-	-	-	-	-	-	-	-	-	-	-	-
B-J	102223		ISI-97027-A	ISI	-	-	-	-	-	-	-	-	-	-	-	-
B9.11	W-26		Pipe-to-Elbow	AUG	-	-	-	-	-	-	-	-	-	-	-	-
1	RHR Equalizer			OWN	-	-	-	-	-	-	-	-	-	-	-	-
				PRE	-	-	-	-	-	-	-	-	-	-	-	-

MONTICELLO Nuclear Generating Plant
3rd Interval ISI Plan Rev. 3 June 1, 1992 to May 31, 2002

Category, ItemNO, Class	Summary / CompID / System	Scope / Method / Procedure	Iso No. Comp. Desc. Code Case /Note		Period 1				Period 2				Period 3			
					1	2	3	4	1	2	3	4	1	2	3	4
F-A	102244	ISI/VT/ISI-VT-2.0	nd-isi-102	ISI	-	-	-	-	c	-	-	-	-	-	-	-
F-A,B,C	SWH-305		Base Plate	AUG	-	-	-	-	-	-	-	-	-	-	-	-
3	RHR SERVICE WATER			OWN	-	-	-	-	-	-	-	-	-	-	-	-
				PRE	-	-	-	-	-	-	-	-	-	-	-	-
F-A	102245	ISI/VT/ISI-VT-2.0	nd-isi-102	ISI	-	-	-	-	-	-	-	-	-	s	-	-
F-A,B,C	SWH-306		Base Plate	AUG	-	-	-	-	-	-	-	-	-	-	-	-
3	RHR SERVICE WATER			OWN	-	-	-	-	-	-	-	-	-	-	-	-
				PRE	-	-	-	-	-	-	-	-	-	-	-	-
F-A	102246		nd-isi-102	ISI	-	-	-	-	-	-	-	-	-	-	-	-
F-A,B,C	SWH-307		Base Plate	AUG	-	-	-	-	-	-	-	-	-	-	-	-
3	RHR SERVICE WATER			OWN	-	-	-	-	-	-	-	-	-	-	-	-
				PRE	-	-	-	-	-	-	-	-	-	-	-	-
F-B	102247	ISI/VT/ISI-VT-2.0	nd-isi-102	ISI	-	-	-	-	-	-	-	-	-	s	-	-
F-A,B,C	SWH-31		Seismic Restraint	AUG	-	-	-	-	-	-	-	-	-	-	-	-
3	RHR SERVICE WATER			OWN	-	-	-	-	-	-	-	-	-	-	-	-
				PRE	-	-	-	-	-	-	-	-	-	-	-	-
F-B	102248	ISI/VT/ISI-VT-2.0	nd-isi-102	ISI	c	-	-	-	B	-	-	-	-	-	-	-
F-A,B,C	SWH-32		Restraint	AUG	-	-	-	-	-	-	-	-	-	-	-	-
3	RHR SERVICE WATER			OWN	-	-	-	-	-	-	-	-	-	-	-	-
				PRE	-	-	-	-	-	-	-	-	-	-	-	-
F-B	102249	ISI/VT/ISI-VT-2.0	nd-isi-103	ISI	-	-	-	-	c	-	-	-	-	-	-	-
F-A,B,C	SR-394		Seismic Restraint	AUG	-	-	-	-	-	-	-	-	-	-	-	-
3	RHR Service Water			OWN	-	-	-	-	-	-	-	-	-	-	-	-
				PRE	-	-	-	-	-	-	-	-	-	-	-	-
F-B	102250	ISI/VT/ISI-VT-2.0	nd-isi-103	ISI	-	-	-	-	-	-	-	-	s	-	-	-
F-A,B,C	SR-395		Seismic Restraint	AUG	-	-	-	-	-	-	-	-	-	-	-	-
3	RHR Service Water			OWN	-	-	-	-	-	-	-	-	-	-	-	-
				PRE	-	-	-	-	-	-	-	-	-	-	-	-
F-B	102251	ISI/VT/ISI-VT-2.0	nd-isi-103	ISI	c	-	-	-	-	-	-	-	-	-	-	-
F-A,B,C	SR-396		Seismic Restraint	AUG	-	-	-	-	-	-	-	-	-	-	-	-
3	RHR Service Water			OWN	-	-	-	-	-	-	-	-	-	-	-	-
				PRE	-	-	-	-	-	-	-	-	-	-	-	-
F-B	102252		nd-isi-103	ISI	-	-	-	-	-	-	-	-	-	-	-	-
F-A,B,C	SR-459		Seismic Restraint	AUG	-	-	-	-	-	-	-	-	-	-	-	-
3	RHR Service Water			OWN	-	-	-	-	-	-	-	-	-	-	-	-
				PRE	-	-	-	-	-	-	-	-	-	-	-	-
F-B	102253	ISI/VT/ISI-VT-2.0	nd-isi-103	ISI	-	-	-	-	-	-	-	-	e	s	-	-
F-A,B,C	SR-464		Strut	AUG	-	-	-	-	-	-	-	-	-	-	-	-
3	RHR Service Water			OWN	-	-	-	-	-	-	-	-	-	-	-	-
				PRE	-	-	-	-	-	-	-	-	-	-	-	-

MONTICELLO Nuclear Generating Plant
3rd Interval ISI Plan Rev. 3 June 1, 1992 to May 31, 2002

Category, ItemNO, Class	Summary / CompID / System	Scope / Method / Procedure	Iso No. Comp. Desc. Code Case /Note		Period 1				Period 2				Period 3			
					1	2	3	4	1	2	3	4	1	2	3	4
F-A	102234	ISI/VT/ISI-VT-2.0	nd-isi-101	ISI	-	-	-	-	-	-	-	-	-	s	-	-
F-A,B,C	SWH-310		Base Plate	AUG	-	-	-	-	-	-	-	-	-	-	-	-
3	RHR SERVICE WATER			OWN	-	-	-	-	-	-	-	-	-	-	-	-
				PRE	-	-	-	-	-	-	-	-	-	-	-	-
F-A	102235	ISI/VT/ISI-VT-2.0	nd-isi-101	ISI	c	-	-	-	-	-	-	-	-	-	-	-
F-A,B,C	SWH-311		Base Plate	AUG	-	-	-	-	-	-	-	-	-	-	-	-
3	RHR SERVICE WATER			OWN	-	-	-	-	-	-	-	-	-	-	-	-
				PRE	-	-	-	-	-	-	-	-	-	-	-	-
F-B	102236		nd-isi-101	ISI	-	-	-	-	-	-	-	-	-	-	-	-
F-A,B,C	SWH-312		Seismic Restraint	AUG	-	-	-	-	-	-	-	-	-	-	-	-
3	RHR SERVICE WATER			OWN	-	-	-	-	-	-	-	-	-	-	-	-
				PRE	-	-	-	-	-	-	-	-	-	-	-	-
F-B	102237	ISI/VT/ISI-VT-2.0	nd-isi-101	ISI	c	-	-	-	-	-	-	-	-	-	-	-
F-A,B,C	SWH-313		Seismic Restraint	AUG	-	-	-	-	-	-	-	-	-	-	-	-
3	RHR SERVICE WATER			OWN	-	-	-	-	-	-	-	-	-	-	-	-
				PRE	-	-	-	-	-	-	-	-	-	-	-	-
F-B	102238	ISI/VT/ISI-VT-2.0	nd-isi-101	ISI	-	c	-	-	-	-	-	-	-	-	-	-
F-A,B,C	SWH-375		Strut	AUG	-	-	-	-	-	-	-	-	-	-	-	-
3	RHR SERVICE WATER			OWN	-	-	-	-	-	-	-	-	-	-	-	-
				PRE	-	-	-	-	-	-	-	-	-	-	-	-
F-B	102239	ISI/VT/ISI-VT-2.0	nd-isi-101	ISI	-	c	-	-	-	-	-	-	-	b	-	-
F-A,B,C	SWH-43		Stanchion	AUG	-	-	-	-	-	-	-	-	-	-	-	-
3	RHR SERVICE WATER			OWN	-	-	-	-	-	-	-	-	-	-	-	-
				PRE	-	-	-	-	-	-	-	-	-	-	-	-
F-B	102240	ISI/VT/ISI-VT-2.0	nd-isi-102	ISI	-	-	-	-	-	-	-	-	s	-	-	-
F-A,B,C	SR-213	PSI/VT/ISI-VT-2.0	Seismic Restraint	AUG	-	-	-	-	-	-	-	-	-	-	-	-
3	RHR SERVICE WATER			OWN	-	-	-	-	-	-	-	-	-	-	-	-
				PRE	-	-	-	-	-	-	-	-	-	-	-	-
F-B	102241	ISI/VT/ISI-VT-2.0	nd-isi-102	ISI	c	-	-	-	-	-	-	-	-	-	-	-
F-A,B,C	SR-79		Seismic Restraint	AUG	-	-	-	-	-	-	-	-	-	-	-	-
3	RHR SERVICE WATER			OWN	-	-	-	-	-	-	-	-	-	-	-	-
				PRE	-	-	-	-	-	-	-	-	-	-	-	-
F-B	102242	ISI/VT/ISI-VT-2.0	nd-isi-102	ISI	c	-	-	-	-	-	-	-	-	-	-	-
F-A,B,C	SR-80		Seismic Restraint	AUG	-	-	-	-	-	-	-	-	-	-	-	-
3	RHR SERVICE WATER			OWN	-	-	-	-	-	-	-	-	-	-	-	-
				PRE	-	-	-	-	-	-	-	-	-	-	-	-
F-C	102243		nd-isi-102	ISI	-	-	-	-	-	-	-	-	-	-	-	-
F-A,B,C	SWH-304		Double Spring	AUG	-	-	-	-	-	-	-	-	-	-	-	-
3	RHR SERVICE WATER			OWN	-	-	-	-	-	-	-	-	-	-	-	-
				PRE	-	-	-	-	-	-	-	-	-	-	-	-

MONTICELLO Nuclear Generating Plant
3rd Interval ISI Plan Rev. 3 June 1, 1992 to May 31, 2002

Category, ItemNO, Class	Summary / CompID / System	Scope / Method / Procedure	Iso No. Comp. Desc. Code Case /Note		Period 1				Period 2				Period 3			
					1	2	3	4	1	2	3	4	1	2	3	4
F-B	102264	ISI/VT/ISI-VT-2.0	nd-isi-105	ISI	c	-	-	-	-	-	-	-	-	-	-	-
F-A,B,C	SR-90A		Rod	AUG	-	-	-	-	-	-	-	-	-	-	-	-
3	RHR SERVICE WATER			OWN	-	-	-	-	-	-	-	-	-	-	-	-
				PRE	-	-	-	-	-	-	-	-	-	-	-	-
F-B	102265		nd-isi-105	ISI	-	-	-	-	-	-	-	-	-	-	-	-
F-A,B,C	SW-21		Rod	AUG	-	-	-	-	-	-	-	-	-	-	-	-
3	RHR SERVICE WATER			OWN	-	-	-	-	-	-	-	-	-	-	-	-
				PRE	-	-	-	-	-	-	-	-	-	-	-	-
F-B	102266	ISI/VT/ISI-VT-2.0	nd-isi-105	ISI	c	-	-	-	-	-	-	-	-	-	-	-
F-A,B,C	SW-22		Rod	AUG	-	-	-	-	-	-	-	-	-	-	-	-
3	RHR SERVICE WATER			OWN	-	-	-	-	-	-	-	-	-	-	-	-
				PRE	-	-	-	-	-	-	-	-	-	-	-	-
F-B	102267	ISI/VT/ISI-VT-2.0	nd-isi-105	ISI	-	-	-	-	-	-	-	-	s	-	-	-
F-A,B,C	SWH-483		Rod	AUG	-	-	-	-	-	-	-	-	-	-	-	-
3	RHR SERVICE WATER			OWN	-	-	-	-	-	-	-	-	-	-	-	-
				PRE	-	-	-	-	-	-	-	-	-	-	-	-
F-B	102268	ISI/VT/ISI-VT-2.0	nd-isi-106	ISI	c	-	-	-	-	-	-	-	-	-	-	-
F-A,B,C	SR-18		Rod	AUG	-	-	-	-	-	-	-	-	-	-	-	-
3	RHR SERVICE WATER			OWN	-	-	-	-	-	-	-	-	-	-	-	-
				PRE	-	-	-	-	-	-	-	-	-	-	-	-
F-B	102269		nd-isi-106	ISI	-	-	-	-	-	-	-	-	-	-	-	-
F-A,B,C	SR-398		Seismic Restraint	AUG	-	-	-	-	-	-	-	-	-	-	-	-
3	RHR SERVICE WATER			OWN	-	-	-	-	-	-	-	-	-	-	-	-
				PRE	-	-	-	-	-	-	-	-	-	-	-	-
F-B	102270	ISI/VT/ISI-VT-2.0	nd-isi-106	ISI	-	-	-	-	-	-	-	-	s	-	-	-
F-A,B,C	SR-450	PSI/VT/ISI-VT-2.0	Strut	AUG	-	-	-	-	-	-	-	-	-	-	-	-
3	RHR SERVICE WATER			OWN	-	-	-	-	-	-	-	-	-	-	-	-
				PRE	-	-	-	-	-	-	-	-	-	-	-	-
F-B	102271		nd-isi-106	ISI	-	-	-	-	-	-	-	-	-	-	-	-
F-A,B,C	SR-457		Anchor	AUG	-	-	-	-	-	-	-	-	-	-	-	-
3	RHR SERVICE WATER			OWN	-	-	-	-	-	-	-	-	-	-	-	-
				PRE	-	-	-	-	-	-	-	-	-	-	-	-
F-B	102272	ISI/VT/ISI-VT-2.0	nd-isi-106	ISI	-	-	-	-	c	-	-	-	-	-	-	-
F-A,B,C	SR-95		Seismic Restraint	AUG	-	-	-	-	-	-	-	-	-	-	-	-
3	RHR SERVICE WATER			OWN	-	-	-	-	-	-	-	-	-	-	-	-
				PRE	-	-	-	-	-	-	-	-	-	-	-	-
F-B	102273	ISI/VT/ISI-VT-2.0	nd-isi-106	ISI	-	-	-	-	-	-	-	-	-	s	-	-
F-A,B,C	SR-97		Seismic Restraint	AUG	-	-	-	-	-	-	-	-	-	-	-	-
3	RHR SERVICE WATER			OWN	-	-	-	-	-	-	-	-	-	-	-	-
				PRE	-	-	-	-	-	-	-	-	-	-	-	-

MONTICELLO Nuclear Generating Plant
3rd Interval ISI Plan Rev. 3 June 1, 1992 to May 31, 2002

Category, ItemNO, Class	Summary / CompID / System	Scope / Method / Procedure	Iso No. Comp. Desc. Code Case /Note		Period 1				Period 2				Period 3			
					1	2	3	4	1	2	3	4	1	2	3	4
F-B	102254	ISI/VT/ISI-VT-2.0	nd-isi-103	ISI	c	-	-	-	-	-	-	-	-	-	-	-
F-A,B,C	SR-84		Seismic Restraint	AUG	-	-	-	-	-	-	-	-	-	-	-	-
3	RHR Service Water			OWN	-	-	-	-	-	-	-	-	-	-	-	-
				PRE	-	-	-	-	-	-	-	-	-	-	-	-
F-B	102255	ISI/VT/ISI-VT-2.0	nd-isi-103	ISI	-	-	-	-	c	-	-	-	e	-	-	-
F-A,B,C	SWH-161		Rod & Strut	AUG	-	-	-	-	-	-	-	-	-	-	-	-
3	RHR Service Water			OWN	-	-	-	-	-	-	-	-	-	-	-	-
				PRE	-	-	-	-	-	-	-	-	-	-	-	-
F-B	102256	ISI/VT/ISI-VT-2.0	nd-isi-104	ISI	c	-	-	-	-	-	-	-	-	-	-	-
F-A,B,C	SR-460		Seismic Restraint	AUG	-	-	-	-	-	-	-	-	-	-	-	-
3	RHR SERVICE WATER			OWN	-	-	-	-	-	-	-	-	-	-	-	-
				PRE	-	-	-	-	-	-	-	-	-	-	-	-
F-B	102257	ISI/VT/ISI-VT-2.0	nd-isi-104	ISI	-	-	-	-	-	-	-	-	s	-	-	-
F-A,B,C	SR-461		Seismic Restraint	AUG	-	-	-	-	-	-	-	-	-	-	-	-
3	RHR SERVICE WATER			OWN	-	-	-	-	-	-	-	-	-	-	-	-
				PRE	-	-	-	-	-	-	-	-	-	-	-	-
F-B	102258		nd-isi-104	ISI	-	-	-	-	-	-	-	-	-	-	-	-
F-A,B,C	SR-462		Seismic Restraint	AUG	-	-	-	-	-	-	-	-	-	-	-	-
3	RHR SERVICE WATER			OWN	-	-	-	-	-	-	-	-	-	-	-	-
				PRE	-	-	-	-	-	-	-	-	-	-	-	-
F-B	102259	ISI/UT/ISI-VT-2.0	nd-isi-104	ISI	-	-	-	-	c	-	-	-	-	-	-	-
F-A,B,C	SR-463		Rod	AUG	-	-	-	-	-	-	-	-	-	-	-	-
3	RHR SERVICE WATER			OWN	-	-	-	-	-	-	-	-	-	-	-	-
				PRE	-	-	-	-	-	-	-	-	-	-	-	-
F-B	102260	ISI/VT/ISI-VT-2.0	nd-isi-104	ISI	-	-	-	-	-	-	-	-	-	s	-	-
F-A,B,C	SR-473		Rod	AUG	-	-	-	-	-	-	-	-	-	-	-	-
3	RHR SERVICE WATER			OWN	-	-	-	-	-	-	-	-	-	-	-	-
				PRE	-	-	-	-	-	-	-	-	-	-	-	-
F-B	102261	ISI/VT/ISI-VT-2.0	nd-isi-104	ISI	c	-	-	-	-	-	-	-	-	-	-	-
F-A,B,C	SWH-45		Rod	AUG	-	-	-	-	-	-	-	-	-	-	-	-
3	RHR SERVICE WATER			OWN	-	-	-	-	-	-	-	-	-	-	-	-
				PRE	-	-	-	-	-	-	-	-	-	-	-	-
F-B	102262	ISI/VT/ISI-VT-2.0	nd-isi-105	ISI	-	-	-	-	-	-	-	-	-	s	-	-
F-A,B,C	SR-481		Seismic Restraint	AUG	-	-	-	-	-	-	-	-	-	-	-	-
3	RHR SERVICE WATER			OWN	-	-	-	-	-	-	-	-	-	-	-	-
				PRE	-	-	-	-	-	-	-	-	-	-	-	-
F-B	102263	ISI/VT/ISI-VT-2.0	nd-isi-105	ISI	-	-	-	-	c	-	-	-	-	-	-	-
F-A,B,C	SR-482		Seismic Restraint	AUG	-	-	-	-	-	-	-	-	-	-	-	-
3	RHR SERVICE WATER			OWN	-	-	-	-	-	-	-	-	-	-	-	-
				PRE	-	-	-	-	-	-	-	-	-	-	-	-

MONTICELLO Nuclear Generating Plant
3rd Interval ISI Plan Rev. 3 June 1, 1992 to May 31, 2002

Category, ItemNO, Class	Summary / CompID / System	Scope / Method / Procedure	Iso No. Comp. Desc. Code Case /Note		Period 1				Period 2				Period 3			
					1	2	3	4	1	2	3	4	1	2	3	4
F-B	102284	ISI/VT/ISI-VT-2.0	nd-isi-107	ISI	-	-	-	-	-	-	-	-	-	s	-	-
F-A,B,C	SR-453		Seismic Restraint	AUG	-	-	-	-	-	-	-	-	-	-	-	-
3	RHR SERVICE WATER			OWN	-	-	-	-	-	-	-	-	-	-	-	-
				PRE	-	-	-	-	-	-	-	-	-	-	-	-
F-B	102285		nd-isi-107	ISI	-	-	-	-	-	-	-	-	-	-	-	-
F-A,B,C	SR-454		Seismic Restraint	AUG	-	-	-	-	-	-	-	-	-	-	-	-
3	RHR SERVICE WATER			OWN	-	-	-	-	-	-	-	-	-	-	-	-
				PRE	-	-	-	-	-	-	-	-	-	-	-	-
F-B	102286		nd-isi-107	ISI	-	-	-	-	-	-	-	-	-	-	-	-
F-A,B,C	SR-455		Seismic Restraint	AUG	-	-	-	-	-	-	-	-	-	-	-	-
3	RHR SERVICE WATER			OWN	-	-	-	-	-	-	-	-	-	-	-	-
				PRE	-	-	-	-	-	-	-	-	-	-	-	-
F-B	102287		nd-isi-107	ISI	-	-	-	-	-	-	-	-	-	-	-	-
F-A,B,C	SR-456		Strut	AUG	-	-	-	-	-	-	-	-	-	-	-	-
3	RHR SERVICE WATER			OWN	-	-	-	-	-	-	-	-	-	-	-	-
				PRE	-	-	-	-	-	-	-	-	-	-	-	-
F-B	102288	ISI/VT/ISI-VT-2.0	nd-isi-107	ISI	-	-	-	-	-	-	-	-	s	-	-	-
F-A,B,C	SR-469		Seismic Restraint	AUG	-	-	-	-	-	-	-	-	-	-	-	-
3	RHR SERVICE WATER			OWN	-	-	-	-	-	-	-	-	-	-	-	-
				PRE	-	-	-	-	-	-	-	-	-	-	-	-
F-B	102289	ISI/VT/ISI-VT-2.0	nd-isi-107	ISI	-	-	-	-	c	-	-	-	-	-	-	-
F-A,B,C	SWH-72A		Stanchion	AUG	-	-	-	-	-	-	-	-	-	-	-	-
3	RHR SERVICE WATER			OWN	-	-	-	-	-	-	-	-	-	-	-	-
				PRE	-	-	-	-	-	-	-	-	-	-	-	-
F-B	102290	ISI/VT/ISI-VT-2.0	nd-isi-107	ISI	-	-	-	-	-	-	-	-	-	s	-	-
F-A,B,C	SWH-72B		Stanchion	AUG	-	-	-	-	-	-	-	-	-	-	-	-
3	RHR SERVICE WATER			OWN	-	-	-	-	-	-	-	-	-	-	-	-
				PRE	-	-	-	-	-	-	-	-	-	-	-	-
F-B	102291	ISI/VT/ISI-VT-2.0	nd-isi-107	ISI	-	c	-	-	-	-	-	-	b	-	-	-
F-A,B,C	SWH-8		Dead Weight Support	AUG	-	-	-	-	-	-	-	-	-	-	-	-
3	RHR SERVICE WATER			OWN	-	-	-	-	-	-	-	-	-	-	-	-
				PRE	-	-	-	-	-	-	-	-	-	-	-	-
F-B	102292	ISI/VT/ISI-VT-2.0	nd-isi-108	ISI	-	-	-	-	-	-	-	-	-	s	-	-
F-A,B,C	IS-SWH-65		Stanchion	AUG	-	-	-	-	-	-	-	-	-	-	-	-
3	RHR SERVICE WATER			OWN	-	-	-	-	-	-	-	-	-	-	-	-
				PRE	-	-	-	-	-	-	-	-	-	-	-	-
F-B	102293	ISI/VT/ISI-VT-2.0	nd-isi-108	ISI	-	-	-	-	c	-	-	-	-	-	-	-
F-A,B,C	IS-SWH-66		Stanchion	AUG	-	-	-	-	-	-	-	-	-	-	-	-
3	RHR SERVICE WATER			OWN	-	-	-	-	-	-	-	-	-	-	-	-
				PRE	-	-	-	-	-	-	-	-	-	-	-	-

MONTICELLO Nuclear Generating Plant
3rd Interval ISI Plan Rev. 3 June 1, 1992 to May 31, 2002

Category, ItemNO, Class	Summary / CompID / System	Scope / Method / Procedure	Iso No. Comp. Desc. Code Case /Note		Period 1				Period 2				Period 3			
					1	2	3	4	1	2	3	4	1	2	3	4
F-B	102274	ISI/VT/ISI-VT-2.0	nd-isi-106	ISI	c	-	-	-	-	-	-	-	-	-	-	-
F-A,B,C	SW-15		Rod	AUG	-	-	-	-	-	-	-	-	-	-	-	-
3	RHR SERVICE WATER			OWN	-	-	-	-	-	-	-	-	-	-	-	-
				PRE	-	-	-	-	-	-	-	-	-	-	-	-
F-B	102275	ISI/VT/ISI-VT-2.0	nd-isi-106	ISI	-	-	-	-	-	-	-	-	s	-	-	-
F-A,B,C	SW-16		Rod	AUG	-	-	-	-	-	-	-	-	-	-	-	-
3	RHR SERVICE WATER			OWN	-	-	-	-	-	-	-	-	-	-	-	-
				PRE	-	-	-	-	-	-	-	-	-	-	-	-
F-B	102276	ISI/VT/ISI-VT-2.0	nd-isi-106	ISI	c	-	-	-	B	-	-	-	-	-	-	-
F-A,B,C	SW-4A		Seismic Restraint	AUG	-	-	-	-	-	-	-	-	-	-	-	-
3	RHR SERVICE WATER			OWN	-	-	-	-	-	-	-	-	-	-	-	-
				PRE	-	-	-	-	-	-	-	-	-	-	-	-
F-B	102277	ISI/VT/ISI-VT-2.0	nd-isi-107	ISI	-	-	-	-	-	-	-	-	-	s	-	-
F-A,B,C	IS-SWH-75		Rod	AUG	-	-	-	-	-	-	-	-	-	-	-	-
3	RHR SERVICE WATER			OWN	-	-	-	-	-	-	-	-	-	-	-	-
				PRE	-	-	-	-	-	-	-	-	-	-	-	-
F-B	102278	ISI/VT/ISI-VT-2.0	nd-isi-107	ISI	c	-	-	-	-	-	-	-	-	-	-	-
F-A,B,C	IS-SWH-76		Rod	AUG	-	-	-	-	-	-	-	-	-	-	-	-
3	RHR SERVICE WATER			OWN	-	-	-	-	-	-	-	-	-	-	-	-
				PRE	-	-	-	-	-	-	-	-	-	-	-	-
F-B	102279		nd-isi-107	ISI	-	-	-	-	-	-	-	-	-	-	-	-
F-A,B,C	SR-105		Stanchion	AUG	-	-	-	-	-	-	-	-	-	-	-	-
3	RHR SERVICE WATER			OWN	-	-	-	-	-	-	-	-	-	-	-	-
				PRE	-	-	-	-	-	-	-	-	-	-	-	-
F-B	102280	ISI/VT/ISI-VT-2.0	nd-isi-107	ISI	-	-	-	-	c	-	-	-	-	-	-	-
F-A,B,C	SR-397		Double Strut	AUG	-	-	-	-	-	-	-	-	-	-	-	-
3	RHR SERVICE WATER			OWN	-	-	-	-	-	-	-	-	-	-	-	-
				PRE	-	-	-	-	-	-	-	-	-	-	-	-
F-B	102281	ISI/VT/ISI-VT-2.0	nd-isi-107	ISI	c	-	-	-	-	-	-	-	-	-	-	-
F-A,B,C	SR-399		Seismic Restraint	AUG	-	-	-	-	-	-	-	-	-	-	-	-
3	RHR SERVICE WATER			OWN	-	-	-	-	-	-	-	-	-	-	-	-
				PRE	-	-	-	-	-	-	-	-	-	-	-	-
F-B	102282	ISI/VT/ISI-VT-2.0	nd-isi-107	ISI	c	-	-	-	-	-	-	-	-	-	-	-
F-A,B,C	SR-451		Seismic Restraint	AUG	-	-	-	-	-	-	-	-	-	-	-	-
3	RHR SERVICE WATER			OWN	-	-	-	-	-	-	-	-	-	-	-	-
				PRE	-	-	-	-	-	-	-	-	-	-	-	-
F-B	102283	ISI/VT/ISI-VT-2.0	nd-isi-107	ISI	-	-	-	-	c	-	-	-	-	-	-	-
F-A,B,C	SR-452		Seismic Restraint	AUG	-	-	-	-	-	-	-	-	-	-	-	-
3	RHR SERVICE WATER			OWN	-	-	-	-	-	-	-	-	-	-	-	-
				PRE	-	-	-	-	-	-	-	-	-	-	-	-

MONTICELLO Nuclear Generating Plant
3rd Interval ISI Plan Rev. 3 June 1, 1992 to May 31, 2002

Category, ItemNO, Class	Summary / CompID / System	Scope / Method / Procedure	Iso No. Comp. Desc. Code Case /Note		Period 1				Period 2				Period 3			
					1	2	3	4	1	2	3	4	1	2	3	4
F-B	102294	ISI/VT/ISI-VT-2.0	nd-isi-108	ISI	c	-	-	-	B	-	-	-	-	-	-	-
F-A,B,C	ISI-SWH-69		Rod	AUG	-	-	-	-	-	-	-	-	-	-	-	-
3	RHR SERVICE WATER			OWN	-	-	-	-	-	-	-	-	-	-	-	-
				PRE	-	-	-	-	-	-	-	-	-	-	-	-
F-B	102295	ISI/VT/ISI-VT-2.0	nd-isi-108	ISI	-	c	-	-	-	-	-	-	b	-	-	-
F-A,B,C	ISI-SWH-70		Dead Weight Support	AUG	-	-	-	-	-	-	-	-	-	-	-	-
3	RHR SERVICE WATER			OWN	-	-	-	-	-	-	-	-	-	-	-	-
				PRE	-	-	-	-	-	-	-	-	-	-	-	-
F-B	102296	ISI/VT/ISI-VT-2.0	nd-isi-108	ISI	c	-	-	-	-	-	-	-	-	-	-	-
F-A,B,C	SR-100		Double Rod	AUG	-	-	-	-	-	-	-	-	-	-	-	-
3	RHR SERVICE WATER			OWN	-	-	-	-	-	-	-	-	-	-	-	-
				PRE	-	-	-	-	-	-	-	-	-	-	-	-
F-B	102297		nd-isi-108	ISI	-	-	-	-	-	-	-	-	-	-	-	-
F-A,B,C	SR-103		Double Rod	AUG	-	-	-	-	-	-	-	-	-	-	-	-
3	RHR SERVICE WATER			OWN	-	-	-	-	-	-	-	-	-	-	-	-
				PRE	-	-	-	-	-	-	-	-	-	-	-	-
F-B	102298		nd-isi-108	ISI	-	-	-	-	-	-	-	-	-	-	-	-
F-A,B,C	SR-104		Seismic Restraint	AUG	-	-	-	-	-	-	-	-	-	-	-	-
3	RHR SERVICE WATER			OWN	-	-	-	-	-	-	-	-	-	-	-	-
				PRE	-	-	-	-	-	-	-	-	-	-	-	-
F-B	102299	ISI/VT/ISI-VT-2.0	nd-isi-108	ISI	c	-	-	-	-	-	-	-	-	-	-	-
F-A,B,C	SR-106		Stanchion	AUG	-	-	-	-	-	-	-	-	-	-	-	-
3	RHR SERVICE WATER			OWN	-	-	-	-	-	-	-	-	-	-	-	-
				PRE	-	-	-	-	-	-	-	-	-	-	-	-
F-B	102300	ISI/VT/ISI-VT-2.0	nd-isi-108	ISI	-	-	-	-	-	-	-	-	s	-	-	-
F-A,B,C	SR-382		Strut	AUG	-	-	-	-	-	-	-	-	-	-	-	-
3	RHR SERVICE WATER			OWN	-	-	-	-	-	-	-	-	-	-	-	-
				PRE	-	-	-	-	-	-	-	-	-	-	-	-
F-B	102301		nd-isi-108	ISI	-	-	-	-	-	-	-	-	-	-	-	-
F-A,B,C	SR-383		Strut (Remove by Mod 00Q015) 01/16/2000	AUG	-	-	-	-	-	-	-	-	-	-	-	-
3	RHR SERVICE WATER			OWN	-	-	-	-	-	-	-	-	-	-	-	-
				PRE	-	-	-	-	-	-	-	-	-	-	-	-
F-B	102302	ISI/VT/ISI-VT-2.0	nd-isi-108	ISI	-	-	-	-	c	-	-	-	-	-	-	-
F-A,B,C	SR-384		Strut (Remove by Mod 00Q015) 01/16/2000	AUG	-	-	-	-	-	-	-	-	-	-	-	-
3	RHR SERVICE WATER			OWN	-	-	-	-	-	-	-	-	-	-	-	-
				PRE	-	-	-	-	-	-	-	-	-	-	-	-
F-B	102303		nd-isi-108	ISI	-	-	-	-	-	-	-	-	-	-	-	-
F-A,B,C	SR-385		Strut (Remove by Mod 00Q015) 01/16/2000	AUG	-	-	-	-	-	-	-	-	-	-	-	-
3	RHR SERVICE WATER			OWN	-	-	-	-	-	-	-	-	-	-	-	-
				PRE	-	-	-	-	-	-	-	-	-	-	-	-

MONTICELLO Nuclear Generating Plant
3rd Interval ISI Plan Rev. 3 June 1, 1992 to May 31, 2002

Category, ItemNO, Class	Summary / CompID / System	Scope / Method / Procedure	Iso No. Comp. Desc. Code Case /Note		Period 1				Period 2				Period 3			
					1	2	3	4	1	2	3	4	1	2	3	4
F-B	102314	ISI/VT/ISI-VT-2.0	nd-isi-109	ISI	-	c	-	-	-	-	-	-	-	-	-	-
F-A,B,C	SR-492		Strut	AUG	-	-	-	-	-	-	-	-	-	-	-	-
3	RHR SERVICE WATER			OWN	-	-	-	-	-	-	-	-	-	-	-	-
				PRE	-	-	-	-	-	-	-	-	-	-	-	-
F-B	102315	ISI/VT/ISI-VT-2.0	nd-isi-109	ISI	-	-	-	-	c	-	-	-	-	-	-	-
F-A,B,C	SR-94		Seismic Restraint	AUG	-	-	-	-	-	-	-	-	-	-	-	-
3	RHR SERVICE WATER			OWN	-	-	-	-	-	-	-	-	-	-	-	-
				PRE	-	-	-	-	-	-	-	-	-	-	-	-
F-B	102316	ISI/VT/ISI-VT-2.0	nd-isi-109	ISI	c	-	-	-	-	-	-	-	-	-	-	-
F-A,B,C	SR-96		Seismic Restraint	AUG	-	-	-	-	-	-	-	-	-	-	-	-
3	RHR SERVICE WATER			OWN	-	-	-	-	-	-	-	-	-	-	-	-
				PRE	-	-	-	-	-	-	-	-	-	-	-	-
F-B	102317		nd-isi-109	ISI	-	-	-	-	-	-	-	-	-	-	-	-
F-A,B,C	SW-24		Rod	AUG	-	-	-	-	-	-	-	-	-	-	-	-
3	RHR SERVICE WATER			OWN	-	-	-	-	-	-	-	-	-	-	-	-
				PRE	-	-	-	-	-	-	-	-	-	-	-	-
F-B	102318	ISI/VT/ISI-VT-2.0	nd-isi-109	ISI	-	-	-	-	c	-	-	-	-	-	-	-
F-A,B,C	SW-26		Rod	AUG	-	-	-	-	-	-	-	-	-	-	-	-
3	RHR SERVICE WATER			OWN	-	-	-	-	-	-	-	-	-	-	-	-
				PRE	-	-	-	-	-	-	-	-	-	-	-	-
F-B	102319	ISI/VT/ISI-VT-2.0	nd-isi-109	ISI	-	-	-	-	-	-	-	-	s	-	-	-
F-A,B,C	SW-4B		Seismic Restraint	AUG	-	-	-	-	-	-	-	-	-	-	-	-
3	RHR SERVICE WATER			OWN	-	-	-	-	-	-	-	-	-	-	-	-
				PRE	-	-	-	-	-	-	-	-	-	-	-	-
F-B	102320	ISI/VT/ISI-VT-2.0	nd-isi-109	ISI	-	-	-	-	-	-	-	-	-	s	-	-
F-A,B,C	SWH-490		Rod	AUG	-	-	-	-	-	-	-	-	-	-	-	-
3	RHR SERVICE WATER			OWN	-	-	-	-	-	-	-	-	-	-	-	-
				PRE	-	-	-	-	-	-	-	-	-	-	-	-
F-B	102321	ISI/VT/ISI-VT-2.0	nd-isi-109	ISI	-	-	-	-	-	-	-	-	s	-	-	-
F-A,B,C	SWH-498		Rod	AUG	-	-	-	-	-	-	-	-	-	-	-	-
3	RHR SERVICE WATER			OWN	-	-	-	-	-	-	-	-	-	-	-	-
				PRE	-	-	-	-	-	-	-	-	-	-	-	-
F-B	102322		nd-isi-110	ISI	-	-	-	-	-	-	-	-	-	-	-	-
F-A,B,C	SR-494		Strut	AUG	-	-	-	-	-	-	-	-	-	-	-	-
3	RHR SERVICE WATER			OWN	-	-	-	-	-	-	-	-	-	-	-	-
				PRE	-	-	-	-	-	-	-	-	-	-	-	-
F-B	102323	ISI/VT/ISI-VT-2.0	nd-isi-110	ISI	c	-	-	-	-	-	-	-	-	-	-	-
F-A,B,C	SR-91		Seismic Restraint	AUG	-	-	-	-	-	-	-	-	-	-	-	-
3	RHR SERVICE WATER			OWN	-	-	-	-	-	-	-	-	-	-	-	-
				PRE	-	-	-	-	-	-	-	-	-	-	-	-

MONTICELLO Nuclear Generating Plant
3rd Interval ISI Plan Rev. 3 June 1, 1992 to May 31, 2002

Category, ItemNO, Class	Summary / CompID / System	Scope / Method / Procedure	Iso No. Comp. Desc. Code Case /Note		Period 1				Period 2				Period 3			
					1	2	3	4	1	2	3	4	1	2	3	4
F-B	102304	ISI/VT/ISI-VT-2.0	nd-isi-108	ISI	-	-	-	-	-	-	-	-	-	s	-	-
F-A,B,C	SR-386		Strut	AUG	-	-	-	-	-	-	-	-	-	-	-	-
3	RHR SERVICE WATER			OWN	-	-	-	-	-	-	-	-	-	-	-	-
				PRE	-	-	-	-	-	-	-	-	-	-	-	-
F-B	102305	ISI/VT/ISI-VT-2.0	nd-isi-108	ISI	-	-	-	-	-	-	-	-	-	s	-	-
F-A,B,C	SR-400		Strut	AUG	-	-	-	-	-	-	-	-	-	-	-	-
3	RHR SERVICE WATER			OWN	-	-	-	-	-	-	-	-	-	-	-	-
				PRE	-	-	-	-	-	-	-	-	-	-	-	-
F-B	102306	ISI/VT/ISI-VT-2.0	nd-isi-108	ISI	-	-	-	-	-	-	-	-	s	-	-	-
F-A,B,C	SR-401		Strut	AUG	-	-	-	-	-	-	-	-	-	-	-	-
3	RHR SERVICE WATER			OWN	-	-	-	-	-	-	-	-	-	-	-	-
				PRE	-	-	-	-	-	-	-	-	-	-	-	-
F-B	102307	ISI/VT/ISI-VT-2.0	nd-isi-108	ISI	-	-	-	-	c	-	-	-	-	-	-	-
F-A,B,C	SWH-11		Rod	AUG	-	-	-	-	-	-	-	-	-	-	-	-
3	RHR SERVICE WATER			OWN	-	-	-	-	-	-	-	-	-	-	-	-
				PRE	-	-	-	-	-	-	-	-	-	-	-	-
F-B	102308	ISI/VT/ISI-VT-2.0	nd-isi-108	ISI	-	c	-	-	-	-	-	-	-	-	-	-
F-A,B,C	SWH-9		Rod	AUG	-	-	-	-	-	-	-	-	-	-	-	-
3	RHR SERVICE WATER			OWN	-	-	-	-	-	-	-	-	-	-	-	-
				PRE	-	-	-	-	-	-	-	-	-	-	-	-
F-B	102309		nd-isi-108	ISI	-	-	-	-	-	-	-	-	-	-	-	-
F-A,B,C	SWH-9A		Rod	AUG	-	-	-	-	-	-	-	-	-	-	-	-
3	RHR SERVICE WATER			OWN	-	-	-	-	-	-	-	-	-	-	-	-
				PRE	-	-	-	-	-	-	-	-	-	-	-	-
F-B	102310	ISI/VT/ISI-VT-2.0	nd-isi-109	ISI	c	-	-	-	-	-	-	-	-	-	-	-
F-A,B,C	SR-337		Strut	AUG	-	-	-	-	-	-	-	-	-	-	-	-
3	RHR SERVICE WATER			OWN	-	-	-	-	-	-	-	-	-	-	-	-
				PRE	-	-	-	-	-	-	-	-	-	-	-	-
F-B	102311	ISI/VT/ISI-VT-2.0	nd-isi-109	ISI	-	c	-	-	-	-	-	-	-	-	-	-
F-A,B,C	SR-402		Strut	AUG	-	-	-	-	-	-	-	-	-	-	-	-
3	RHR SERVICE WATER			OWN	-	-	-	-	-	-	-	-	-	-	-	-
				PRE	-	-	-	-	-	-	-	-	-	-	-	-
F-B	102312		nd-isi-109	ISI	-	-	-	-	-	-	-	-	-	-	-	-
F-A,B,C	SR-458		Anchor	AUG	-	-	-	-	-	-	-	-	-	-	-	-
3	RHR SERVICE WATER			OWN	-	-	-	-	-	-	-	-	-	-	-	-
				PRE	-	-	-	-	-	-	-	-	-	-	-	-
F-B	102313	ISI/VT/ISI-VT-2.0	nd-isi-109	ISI	-	-	-	-	-	-	-	-	-	s	-	-
F-A,B,C	SR-491		Double Strut	AUG	-	-	-	-	-	-	-	-	-	-	-	-
3	RHR SERVICE WATER			OWN	-	-	-	-	-	-	-	-	-	-	-	-
				PRE	-	-	-	-	-	-	-	-	-	-	-	-

MONTICELLO Nuclear Generating Plant
3rd Interval ISI Plan Rev. 3 June 1, 1992 to May 31, 2002

Category, ItemNO, Class	Summary / CompID / System	Scope / Method / Procedure	Iso No. Comp. Desc. Code Case /Note		Period 1				Period 2				Period 3			
					1	2	3	4	1	2	3	4	1	2	3	4
F-B	102334	ISI/VT/ISI-VT-2.0	nd-isi-141	ISI	-	c	-	-	-	-	-	-	-	-	-	-
F-A,B,C	SR-220		Seismic Restraint	AUG	-	-	-	-	-	-	-	-	-	-	-	-
3	Combustible Gas Ctrl			OWN	-	-	-	-	-	-	-	-	-	-	-	-
				PRE	-	-	-	-	-	-	-	-	-	-	-	-
F-B	102335	ISI/VT/ISI-VT-2.0	nd-isi-141	ISI	-	-	-	-	-	-	-	-	s	-	-	-
F-A,B,C	SR-224		Seismic Restraint	AUG	-	-	-	-	-	-	-	-	-	-	-	-
3	Combustible Gas Ctrl			OWN	-	-	-	-	-	-	-	-	-	-	-	-
				PRE	-	-	-	-	-	-	-	-	-	-	-	-
F-B	102336	ISI/VT/ISI-VT-2.0	nd-isi-141	ISI	-	-	-	-	c	-	-	-	-	-	-	-
F-A,B,C	SR-236		Anchor	AUG	-	-	-	-	-	-	-	-	-	-	-	-
3	Combustible Gas Ctrl			OWN	-	-	-	-	-	-	-	-	-	-	-	-
				PRE	-	-	-	-	-	-	-	-	-	-	-	-
F-B	102337	ISI/VT/ISI-VT-2.0	nd-isi-141	ISI	-	-	-	-	-	-	-	-	s	-	-	-
F-A,B,C	SR-265		Seismic Restraint	AUG	-	-	-	-	-	-	-	-	-	-	-	-
3	Combustible Gas Ctrl			OWN	-	-	-	-	-	-	-	-	-	-	-	-
				PRE	-	-	-	-	-	-	-	-	-	-	-	-
F-B	102338		nd-isi-141	ISI	-	-	-	-	-	-	-	-	-	-	-	-
F-A,B,C	SR-285		Anchor	AUG	-	-	-	-	-	-	-	-	-	-	-	-
3	Combustible Gas Ctrl			OWN	-	-	-	-	-	-	-	-	-	-	-	-
				PRE	-	-	-	-	-	-	-	-	-	-	-	-
F-B	102339	ISI/VT/ISI-VT-2.0	nd-isi-142	ISI	c	-	-	-	-	-	-	-	-	-	-	-
F-A,B,C	SR-226		Anchor	AUG	-	-	-	-	-	-	-	-	-	-	-	-
3	Combustible Gas Ctrl			OWN	-	-	-	-	-	-	-	-	-	-	-	-
				PRE	-	-	-	-	-	-	-	-	-	-	-	-
F-B	102340	ISI/VT/ISI-VT-2.0	nd-isi-142	ISI	-	-	-	-	c	-	-	-	-	-	-	-
F-A,B,C	SR-228		Seismic Restraint	AUG	-	-	-	-	-	-	-	-	-	-	-	-
3	Combustible Gas Ctrl			OWN	-	-	-	-	-	-	-	-	-	-	-	-
				PRE	-	-	-	-	-	-	-	-	-	-	-	-
F-C	102341		nd-isi-142	ISI	-	-	-	-	-	-	-	-	-	-	-	-
F-A,B,C	SR-229		Spring	AUG	-	-	-	-	-	-	-	-	-	-	-	-
3	Combustible Gas Ctrl			OWN	-	-	-	-	-	-	-	-	-	-	-	-
				PRE	-	-	-	-	-	-	-	-	-	-	-	-
F-B	102342	ISI/VT/ISI-VT-2.0	nd-isi-142	ISI	-	-	-	-	-	-	-	-	-	s	-	-
F-A,B,C	SR-230		Seismic Restraint	AUG	-	-	-	-	-	-	-	-	-	-	-	-
3	Combustible Gas Ctrl			OWN	-	-	-	-	-	-	-	-	-	-	-	-
				PRE	-	-	-	-	-	-	-	-	-	-	-	-
F-C	102343	ISI/VT/ISI-VT-2.0	nd-isi-144	ISI	-	-	-	-	c	-	-	-	-	-	-	-
F-A,B,C	SH-227		Double Spring	AUG	-	-	-	-	-	-	-	-	-	-	-	-
3	Combustible Gas Ctrl			OWN	-	-	-	-	-	-	-	-	-	-	-	-
				PRE	-	-	-	-	-	-	-	-	-	-	-	-

MONTICELLO Nuclear Generating Plant
3rd Interval ISI Plan Rev. 3 June 1, 1992 to May 31, 2002

Category, ItemNO, Class	Summary / CompID / System	Scope / Method / Procedure	Iso No. Comp. Desc. Code Case /Note		Period 1				Period 2				Period 3			
					1	2	3	4	1	2	3	4	1	2	3	4
F-B	102324	ISI/VT/ISI-VT-2.0	nd-isi-110	ISI	-	-	-	-	-	-	-	-	s	-	-	-
F-A,B,C	SW-29		Rod	AUG	-	-	-	-	-	-	-	-	-	-	-	-
3	RHR SERVICE WATER			OWN	-	-	-	-	-	-	-	-	-	-	-	-
				PRE	-	-	-	-	-	-	-	-	-	-	-	-
F-B	102325	ISI/VT/ISI-VT-2.0	nd-isi-110	ISI	-	-	-	-	c	-	-	-	-	-	-	-
F-A,B,C	SWH-493		Rod	AUG	-	-	-	-	-	-	-	-	-	-	-	-
3	RHR SERVICE WATER			OWN	-	-	-	-	-	-	-	-	-	-	-	-
				PRE	-	-	-	-	-	-	-	-	-	-	-	-
F-B	102326	ISI/VT/ISI-VT-2.0	nd-isi-111	ISI	-	-	-	-	-	-	-	-	-	s	-	-
F-A,B,C	SR-88		Stanchion	AUG	-	-	-	-	-	-	-	-	-	-	-	-
3	RHR SERVICE WATER			OWN	-	-	-	-	-	-	-	-	-	-	-	-
				PRE	-	-	-	-	-	-	-	-	-	-	-	-
F-B	102327		nd-isi-123	ISI	-	-	-	-	-	-	-	-	-	-	-	-
F-A,B,C	H-201		Rod	AUG	-	-	-	-	-	-	-	-	-	-	-	-
3	RHR SERVICE WATER			OWN	-	-	-	-	-	-	-	-	-	-	-	-
				PRE	-	-	-	-	-	-	-	-	-	-	-	-
F-B	102328	ISI/VT/ISI-VT-2.0	nd-isi-123	ISI	-	-	-	-	c	-	-	-	-	-	-	-
F-A,B,C	H-202		Rod	AUG	-	-	-	-	-	-	-	-	-	-	-	-
3	RHR SERVICE WATER			OWN	-	-	-	-	-	-	-	-	-	-	-	-
				PRE	-	-	-	-	-	-	-	-	-	-	-	-
F-B	102329	ISI/VT/ISI-VT-2.0	nd-isi-123	ISI	-	c	-	-	-	-	-	-	b	-	-	-
F-A,B,C	H-203		Rod	AUG	-	-	-	-	-	-	-	-	-	-	-	-
3	RHR SERVICE WATER			OWN	-	-	-	-	-	-	-	-	-	-	-	-
				PRE	-	-	-	-	-	-	-	-	-	-	-	-
F-B	102330	ISI/VT/ISI-VT-2.0	nd-isi-123	ISI	-	-	-	-	-	-	-	-	-	s	-	-
F-A,B,C	H-204		Rod	AUG	-	-	-	-	-	-	-	-	-	-	-	-
3	RHR SERVICE WATER			OWN	-	-	-	-	-	-	-	-	-	-	-	-
				PRE	-	-	-	-	-	-	-	-	-	-	-	-
F-B	102331		nd-isi-123	ISI	-	-	-	-	-	-	-	-	-	-	-	-
F-A,B,C	H-205		Rod	AUG	-	-	-	-	-	-	-	-	-	-	-	-
3	RHR SERVICE WATER			OWN	-	-	-	-	-	-	-	-	-	-	-	-
				PRE	-	-	-	-	-	-	-	-	-	-	-	-
F-C	102332	ISI/VT/ISI-VT-2.0	nd-isi-141	ISI	c	-	-	-	-	-	-	-	-	-	-	-
F-A,B,C	SH-195		Spring	AUG	-	-	-	-	-	-	-	-	-	-	-	-
3	Combustible Gas Ctrl			OWN	-	-	-	-	-	-	-	-	-	-	-	-
				PRE	-	-	-	-	-	-	-	-	-	-	-	-
F-C	102333	ISI/VT/ISI-VT-2.0	nd-isi-141	ISI	-	-	-	-	-	-	-	-	-	s	-	-
F-A,B,C	SH-221		Spring	AUG	-	-	-	-	-	-	-	-	-	-	-	-
3	Combustible Gas Ctrl			OWN	-	-	-	-	-	-	-	-	-	-	-	-
				PRE	-	-	-	-	-	-	-	-	-	-	-	-

MONTICELLO Nuclear Generating Plant
3rd Interval ISI Plan Rev. 3 June 1, 1992 to May 31, 2002

Category, ItemNO, Class	Summary / CompID / System	Scope / Method / Procedure	Iso No. Comp. Desc. Code Case /Note		Period 1				Period 2				Period 3			
					1	2	3	4	1	2	3	4	1	2	3	4
B-G-2	102373	ISI/VT/ISI-VT-1.0	ISI Fig 1	ISI	c	-	-	-	-	-	-	-	-	-	-	-
B7.10	B- 1		N-6B Flange Bolts	AUG	-	-	-	-	-	-	-	-	-	-	-	-
1	Top Head			OWN	-	-	-	-	-	-	-	-	-	-	-	-
				PRE	-	-	-	-	-	-	-	-	-	-	-	-
B-D	102374	ISI/UT/ISI-UT-5	ISI Fig 1	ISI	-	c	-	-	-	-	-	-	-	-	-	-
B3.100	N- 6A IR		N- 6A Inner Radius	AUG	-	-	-	-	-	-	-	-	-	-	-	-
1	Reactor Vessel			OWN	-	-	-	-	-	-	-	-	-	-	-	-
				PRE	-	-	-	-	-	-	-	-	-	-	-	-
B-D	102375	ISI/UT/ISI-UT-3A	ISI Fig 1	ISI	-	c	-	-	-	-	-	-	-	-	-	-
B3.90	N- 6A NV		Nozzle/Head Weld	AUG	-	-	-	-	-	-	-	-	-	-	-	-
1	Reactor Vessel			OWN	-	-	-	-	-	-	-	-	-	-	-	-
				PRE	-	-	-	-	-	-	-	-	-	-	-	-
B-D	102376	ISI/UT/ISI-UT-5	ISI Fig 1	ISI	-	-	-	-	-	-	-	-	s	-	-	-
B3.100	N- 6B IR		N- 6B Inner Radius	AUG	-	-	-	-	-	-	-	-	-	-	-	-
1	Reactor Vessel			OWN	-	-	-	-	-	-	-	-	-	-	-	-
				PRE	-	-	-	-	-	-	-	-	-	-	-	-
B-D	102377	ISI/UT/ISI-UT-3A	ISI Fig 1	ISI	-	-	-	-	-	-	-	-	s	-	-	-
B3.90	N- 6B NV		N- 6B Noz/Head Weld	AUG	-	-	-	-	-	-	-	-	-	-	-	-
1	Reactor Vessel			OWN	-	-	-	-	-	-	-	-	-	-	-	-
				PRE	-	-	-	-	-	-	-	-	-	-	-	-
B-D	102378	ISI/UT/ISI-UT-5	ISI Fig 1	ISI	-	-	-	-	-	c	-	-	-	-	-	-
B3.100	N- 7 IR		N- 7 Inner Radius	AUG	-	-	-	-	-	-	-	-	-	-	-	-
1	Reactor Vessel			OWN	-	-	-	-	-	-	-	-	-	-	-	-
				PRE	-	-	-	-	-	-	-	-	-	-	-	-
B-D	102379	ISI/UT/ISI-UT-3A	ISI Fig 1	ISI	-	-	-	-	-	c	-	-	-	-	-	-
B3.90	N- 7 NV		N- 7 Noz/Head Weld	AUG	-	-	-	-	-	-	-	-	-	-	-	-
1	Reactor Vessel			OWN	-	-	-	-	-	-	-	-	-	-	-	-
				PRE	-	-	-	-	-	-	-	-	-	-	-	-
B-A	102380	ISI/UT/ISI-UT-3	ISI Fig 1	ISI	c	-	-	-	-	B	-	-	-	b	-	-
B1.21	W- 1		T.H. Circ. Weld	AUG	-	-	-	-	-	-	-	-	-	-	-	-
1	Reactor Vessel			OWN	-	-	-	-	-	-	-	-	-	-	-	-
				PRE	-	-	-	-	-	-	-	-	-	-	-	-
B-A	102381		ISI Fig 1	ISI	-	-	-	-	-	-	-	-	-	-	-	-
B1.22	W- 2		T.H. Meridional Weld	AUG	-	-	-	-	-	-	-	-	-	-	-	-
1	Reactor Vessel			OWN	-	-	-	-	-	-	-	-	-	-	-	-
				PRE	-	-	-	-	-	-	-	-	-	-	-	-
B-A	102382		ISI Fig 1	ISI	-	-	-	-	-	-	-	-	-	-	-	-
B1.22	W- 3		T.H. Meridional Weld	AUG	-	-	-	-	-	-	-	-	-	-	-	-
1	Reactor Vessel			OWN	-	-	-	-	-	-	-	-	-	-	-	-
				PRE	-	-	-	-	-	-	-	-	-	-	-	-

MONTICELLO Nuclear Generating Plant
3rd Interval ISI Plan Rev. 3 June 1, 1992 to May 31, 2002

Category, ItemNO, Class	Summary / CompID / System	Scope / Method / Procedure	Iso No. Comp. Desc. Code Case /Note		Period 1				Period 2				Period 3			
					1	2	3	4	1	2	3	4	1	2	3	4
F-B	102344	ISI/VT/ISI-VT-2.0	nd-isi-144	ISI	-	c	-	-	-	-	-	-	-	-	-	-
F-A,B,C	SR-181		Seismic Restraint	AUG	-	-	-	-	-	-	-	-	-	-	-	-
3	Combustible Gas Ctrl			OWN	-	-	-	-	-	-	-	-	-	-	-	-
				PRE	-	-	-	-	-	-	-	-	-	-	-	-
F-B	102345	ISI/VT/ISI-VT-2.0	nd-isi-144	ISI	c	-	-	-	-	-	-	-	-	-	-	-
F-A,B,C	SR-190		Anchor	AUG	-	-	-	-	-	-	-	-	-	-	-	-
3	Combustible Gas Ctrl			OWN	-	-	-	-	-	-	-	-	-	-	-	-
				PRE	-	-	-	-	-	-	-	-	-	-	-	-
F-B	102346	ISI/VT/ISI-VT-2.0	nd-isi-144	ISI	-	-	-	-	-	-	-	-	-	s	-	-
F-A,B,C	SR-210		Seismic Restraint	AUG	-	-	-	-	-	-	-	-	-	-	-	-
3	Combustible Gas Ctrl			OWN	-	-	-	-	-	-	-	-	-	-	-	-
				PRE	-	-	-	-	-	-	-	-	-	-	-	-
F-B	102347	ISI/VT/ISI-VT-2.0	nd-isi-144	ISI	c	-	-	-	B	-	-	-	b	-	-	-
F-A,B,C	SS-211		Snubber	AUG	-	-	-	-	-	-	-	-	-	-	-	-
3	Combustible Gas Ctrl			OWN	-	-	-	-	-	-	-	-	-	-	-	-
				PRE	-	-	-	-	-	-	-	-	-	-	-	-
F-B	102348	ISI/VT/ISI-VT-2.0	nd-isi-144	ISI	-	-	-	-	-	-	-	-	s	-	-	-
F-A,B,C	SR-225		Seismic Restraint	AUG	-	-	-	-	-	-	-	-	-	-	-	-
3	Combustible Gas Ctrl			OWN	-	-	-	-	-	-	-	-	-	-	-	-
				PRE	-	-	-	-	-	-	-	-	-	-	-	-
F-B	102349		nd-isi-144	ISI	-	-	-	-	-	-	-	-	-	-	-	-
F-A,B,C	SR-260		Seismic Restraint	AUG	-	-	-	-	-	-	-	-	-	-	-	-
3	Combustible Gas Ctrl			OWN	-	-	-	-	-	-	-	-	-	-	-	-
				PRE	-	-	-	-	-	-	-	-	-	-	-	-
F-C	102350	ISI/VT/ISI-VT-2.0	nd-isi-145	ISI	-	-	-	-	-	-	-	-	-	s	-	-
F-A,B,C	SH-280		Spring	AUG	-	-	-	-	-	-	-	-	-	-	-	-
3	Combustible Gas Ctrl			OWN	-	-	-	-	-	-	-	-	-	-	-	-
				PRE	-	-	-	-	-	-	-	-	-	-	-	-
F-C	102351	ISI/UT/ISI-VT-2.0	nd-isi-145	ISI	-	-	-	-	c	-	-	-	-	-	-	-
F-A,B,C	SH-300		Spring	AUG	-	-	-	-	-	-	-	-	-	-	-	-
3	Combustible Gas Ctrl			OWN	-	-	-	-	-	-	-	-	-	-	-	-
				PRE	-	-	-	-	-	-	-	-	-	-	-	-
F-B	102352		nd-isi-145	ISI	-	-	-	-	-	-	-	-	-	-	-	-
F-A,B,C	SR-290		Seismic Restraint	AUG	-	-	-	-	-	-	-	-	-	-	-	-
3	Combustible Gas Ctrl			OWN	-	-	-	-	-	-	-	-	-	-	-	-
				PRE	-	-	-	-	-	-	-	-	-	-	-	-
F-B	102353		nd-isi-145	ISI	-	-	-	-	-	-	-	-	-	-	-	-
F-A,B,C	SR-325		Seismic Restraint	AUG	-	-	-	-	-	-	-	-	-	-	-	-
3	Combustible Gas Ctrl			OWN	-	-	-	-	-	-	-	-	-	-	-	-
				PRE	-	-	-	-	-	-	-	-	-	-	-	-

MONTICELLO Nuclear Generating Plant
3rd Interval ISI Plan Rev. 3 June 1, 1992 to May 31, 2002

Category, ItemNO, Class	Summary / CompID / System	Scope / Method / Procedure	Iso No. Comp. Desc. Code Case /Note		Period 1				Period 2				Period 3			
					1	2	3	4	1	2	3	4	1	2	3	4
B-O	102393	ISI/PT/ISI-PT-1	ISI Fig 2	ISI	-	-	-	-	-	c	-	-	-	-	-	-
B14.10	02-27 (Lower)		CRD Housing Weld	AUG	-	-	-	-	-	-	-	-	-	-	-	-
1	CRD Housings			OWN	-	-	-	-	-	-	-	-	-	-	-	-
				PRE	-	-	-	-	-	-	-	-	-	-	-	-
B-O	102394	ISI/PT/ISI-PT-1	ISI Fig 2	ISI	-	-	-	-	-	c	-	-	-	-	-	-
B14.10	02-27 (Upper)		CRD Housing Weld	AUG	-	-	-	-	-	-	-	-	-	-	-	-
1	CRD Housings			OWN	-	-	-	-	-	-	-	-	-	-	-	-
				PRE	-	-	-	-	-	-	-	-	-	-	-	-
B-G-2	102395		ISI Fig 2	ISI	-	-	-	-	-	-	-	-	-	-	-	-
B7.80	02-27B		CRD Housing Bolts	AUG	-	-	-	-	-	-	-	-	-	-	-	-
1	CRD Housings			OWN	-	-	-	-	-	-	-	-	-	-	-	-
				PRE	-	-	-	-	-	-	-	-	-	-	-	-
B-O	102396	ISI/PT/ISI-PT-1	ISI Fig 2	ISI	-	-	-	-	-	-	-	-	s	-	-	-
B14.10	02-31 (Lower)		CRD Housing Weld	AUG	-	-	-	-	-	-	-	-	-	-	-	-
1	CRD Housings			OWN	-	-	-	-	-	-	-	-	-	-	-	-
				PRE	-	-	-	-	-	-	-	-	-	-	-	-
B-O	102397	ISI/PT/ISI-PT-1	ISI Fig 2	ISI	-	-	-	-	-	-	-	-	s	-	-	-
B14.10	02-31 (Upper)		CRD Housing Weld	AUG	-	-	-	-	-	-	-	-	-	-	-	-
1	CRD Housings			OWN	-	-	-	-	-	-	-	-	-	-	-	-
				PRE	-	-	-	-	-	-	-	-	-	-	-	-
B-G-2	102398		ISI Fig 2	ISI	-	-	-	-	-	-	-	-	-	-	-	-
B7.80	02-31B		CRD Housing Bolts	AUG	-	-	-	-	-	-	-	-	-	-	-	-
1	CRD Housings			OWN	-	-	-	-	-	-	-	-	-	-	-	-
				PRE	-	-	-	-	-	-	-	-	-	-	-	-
B-O	102399		ISI Fig 2	ISI	-	-	-	-	-	-	-	-	-	-	-	-
B14.10	06-15 (Lower)		CRD Housing Weld	AUG	-	-	-	-	-	-	-	-	-	-	-	-
1	CRD Housings			OWN	-	-	-	-	-	-	-	-	-	-	-	-
				PRE	-	-	-	-	-	-	-	-	-	-	-	-
B-O	102400		ISI Fig 2	ISI	-	-	-	-	-	-	-	-	-	-	-	-
B14.10	06-15 (Upper)		CRD Housing Weld	AUG	-	-	-	-	-	-	-	-	-	-	-	-
1	CRD Housings			OWN	-	-	-	-	-	-	-	-	-	-	-	-
				PRE	-	-	-	-	-	-	-	-	-	-	-	-
B-G-2	102401		ISI Fig 2	ISI	-	-	-	-	-	-	-	-	-	-	-	-
B7.80	06-15B		CRD Housing Bolts	AUG	-	-	-	-	-	-	-	-	-	-	-	-
1	CRD Housings			OWN	-	-	-	-	-	-	-	-	-	-	-	-
				PRE	-	-	-	-	-	-	-	-	-	-	-	-
B-O	102402		ISI Fig 2	ISI	-	-	-	-	-	-	-	-	-	-	-	-
B14.10	06-19 (Lower)		CRD Housing Weld	AUG	-	-	-	-	-	-	-	-	-	-	-	-
1	CRD Housings			OWN	-	-	-	-	-	-	-	-	-	-	-	-
				PRE	-	-	-	-	-	-	-	-	-	-	-	-

MONTICELLO Nuclear Generating Plant
3rd Interval ISI Plan Rev. 3 June 1, 1992 to May 31, 2002

Category, ItemNO, Class	Summary / CompID / System	Scope / Method / Procedure	Iso No. Comp. Desc. Code Case /Note		Period 1				Period 2				Period 3			
					1	2	3	4	1	2	3	4	1	2	3	4
B-A	102383	ISI/UT/ISI-UT-3A	ISI Fig 1	ISI	-	c	-	-	-	-	-	-	-	-	-	-
B1.22	W- 4		T.H. Meridional Weld	AUG	-	-	-	-	-	-	-	-	-	-	-	-
1	Reactor Vessel			OWN	-	-	-	-	-	-	-	-	-	-	-	-
				PRE	-	-	-	-	-	-	-	-	-	-	-	-
B-A	102384		ISI Fig 1	ISI	-	-	-	-	-	-	-	-	-	-	-	-
B1.22	W- 5		T.H. Meridional Weld	AUG	-	-	-	-	-	-	-	-	-	-	-	-
1	Reactor Vessel			OWN	-	-	-	-	-	-	-	-	-	-	-	-
				PRE	-	-	-	-	-	-	-	-	-	-	-	-
B-A	102385		ISI Fig 1	ISI	-	-	-	-	-	-	-	-	-	-	-	-
B1.22	W- 6		T.H. Meridional Weld	AUG	-	-	-	-	-	-	-	-	-	-	-	-
1	Reactor Vessel			OWN	-	-	-	-	-	-	-	-	-	-	-	-
				PRE	-	-	-	-	-	-	-	-	-	-	-	-
B-A	102386		ISI Fig 1	ISI	-	-	-	-	-	-	-	-	-	-	-	-
B1.22	W- 7		T.H. Meridional Weld	AUG	-	-	-	-	-	-	-	-	-	-	-	-
1	Reactor Vessel			OWN	-	-	-	-	-	-	-	-	-	-	-	-
				PRE	-	-	-	-	-	-	-	-	-	-	-	-
B-A	102387	ISI/UT/ISI-UT-8A	ISI Fig 1	ISI	c	-	-	-	-	B	-	-	-	b	-	-
B1.40	W- 8		T.H. Flange Weld	AUG	-	-	-	-	-	-	-	-	-	-	-	-
1	Reactor Vessel			OWN	-	-	-	-	-	-	-	-	-	-	-	-
				PRE	-	-	-	-	-	-	-	-	-	-	-	-
B-J	102388	ISI/PT/ISI-PT-1	ISI Fig 1	ISI	-	-	-	-	-	-	-	-	-	s	-	-
B9.11	W- 9	ISI/UT/ISI-UT-16	N- 6B Noz/Flg Weld	AUG	-	-	-	-	-	-	-	-	-	-	-	-
1	Top Head			OWN	-	-	-	-	-	-	-	-	-	-	-	-
				PRE	-	-	-	-	-	-	-	-	-	-	-	-
B-J	102389	ISI/PT/ISI-PT-1	ISI Fig 1	ISI	-	-	-	-	-	c	-	-	-	-	-	-
B9.11	W-10	ISI/UT/ISI-UT-16	N- 7 Noz / Flg Weld	AUG	-	-	-	-	-	-	-	-	-	-	-	-
1	Head Vent			OWN	-	-	-	-	-	-	-	-	-	-	-	-
				PRE	-	-	-	-	-	-	-	-	-	-	-	-
B-O	102390		ISI Fig 2	ISI	-	-	-	-	-	-	-	-	-	-	-	-
B14.10	02-23 (Lower)		CRD Housing Weld	AUG	-	-	-	-	-	-	-	-	-	-	-	-
1	CRD Housings			OWN	-	-	-	-	-	-	-	-	-	-	-	-
				PRE	-	-	-	-	-	-	-	-	-	-	-	-
B-O	102391		ISI Fig 2	ISI	-	-	-	-	-	-	-	-	-	-	-	-
B14.10	02-23 (Upper)		CRD Housing Weld	AUG	-	-	-	-	-	-	-	-	-	-	-	-
1	CRD Housings			OWN	-	-	-	-	-	-	-	-	-	-	-	-
				PRE	-	-	-	-	-	-	-	-	-	-	-	-
B-G-2	102392		ISI Fig 2	ISI	-	-	-	-	-	-	-	-	-	-	-	-
B7.80	02-23B		CRD Housing Bolts	AUG	-	-	-	-	-	-	-	-	-	-	-	-
1	CRD Housings			OWN	-	-	-	-	-	-	-	-	-	-	-	-
				PRE	-	-	-	-	-	-	-	-	-	-	-	-

MONTICELLO Nuclear Generating Plant
3rd Interval ISI Plan Rev. 3 June 1, 1992 to May 31, 2002

Category, ItemNO, Class	Summary / CompID / System	Scope / Method / Procedure	Iso No. Comp. Desc. Code Case /Note		Period 1				Period 2				Period 3			
					1	2	3	4	1	2	3	4	1	2	3	4
B-O	102403		ISI Fig 2	ISI	-	-	-	-	-	-	-	-	-	-	-	-
B14.10	06-19 (Upper)		CRD Housing Weld	AUG	-	-	-	-	-	-	-	-	-	-	-	-
1	CRD Housings			OWN	-	-	-	-	-	-	-	-	-	-	-	-
				PRE	-	-	-	-	-	-	-	-	-	-	-	-
B-G-2	102404		ISI Fig 2	ISI	-	-	-	-	-	-	-	-	-	-	-	-
B7.80	06-19B		CRD Housing Bolts	AUG	-	-	-	-	-	-	-	-	-	-	-	-
1	CRD Housings			OWN	-	-	-	-	-	-	-	-	-	-	-	-
				PRE	-	-	-	-	-	-	-	-	-	-	-	-
B-O	102405		ISI Fig 2	ISI	-	-	-	-	-	-	-	-	-	-	-	-
B14.10	06-23 (Lower)		CRD Housing Weld	AUG	-	-	-	-	-	-	-	-	-	-	-	-
1	CRD Housings			OWN	-	-	-	-	-	-	-	-	-	-	-	-
				PRE	-	-	-	-	-	-	-	-	-	-	-	-
B-O	102406		ISI Fig 2	ISI	-	-	-	-	-	-	-	-	-	-	-	-
B14.10	06-23 (Upper)		CRD Housing Weld	AUG	-	-	-	-	-	-	-	-	-	-	-	-
1	CRD Housings			OWN	-	-	-	-	-	-	-	-	-	-	-	-
				PRE	-	-	-	-	-	-	-	-	-	-	-	-
B-G-2	102407		ISI Fig 2	ISI	-	-	-	-	-	-	-	-	-	-	-	-
B7.80	06-23B		CRD Housing Bolts	AUG	-	-	-	-	-	-	-	-	-	-	-	-
1	CRD Housings			OWN	-	-	-	-	-	-	-	-	-	-	-	-
				PRE	-	-	-	-	-	-	-	-	-	-	-	-
B-G-2	102408	ISI/VT/ISI-VT-1.0	ISI Fig 2	ISI	c	-	-	-	-	-	-	-	-	-	-	-
B7.80	06-27B		CRD Housing Bolts	AUG	-	-	-	-	-	-	-	-	-	-	-	-
1	CRD Housings			OWN	-	-	-	-	-	-	-	-	-	-	-	-
				PRE	-	-	-	-	-	-	-	-	-	-	-	-
B-O	102409		ISI Fig 2	ISI	-	-	-	-	-	-	-	-	-	-	-	-
B14.10	06-31 (Lower)		CRD Housing Weld	AUG	-	-	-	-	-	-	-	-	-	-	-	-
1	CRD Housings			OWN	-	-	-	-	-	-	-	-	-	-	-	-
				PRE	-	-	-	-	-	-	-	-	-	-	-	-
B-O	102410		ISI Fig 2	ISI	-	-	-	-	-	-	-	-	-	-	-	-
B14.10	06-31 (Upper)		CRD Housing Weld	AUG	-	-	-	-	-	-	-	-	-	-	-	-
1	CRD Housings			OWN	-	-	-	-	-	-	-	-	-	-	-	-
				PRE	-	-	-	-	-	-	-	-	-	-	-	-
B-G-2	102411		ISI Fig 2	ISI	-	-	-	-	-	-	-	-	-	-	-	-
B7.80	06-31B		CRD Housing Bolts	AUG	-	-	-	-	-	-	-	-	-	-	-	-
1	CRD Housings			OWN	-	-	-	-	-	-	-	-	-	-	-	-
				PRE	-	-	-	-	-	-	-	-	-	-	-	-
B-G-2	102412		ISI Fig 2	ISI	-	-	-	-	-	-	-	-	-	-	-	-
B7.80	06-31B		CRD Housing Bolts	AUG	-	-	-	-	-	-	-	-	-	-	-	-
1	CRD Housings			OWN	-	-	-	-	-	-	-	-	-	-	-	-
				PRE	-	-	-	-	-	-	-	-	-	-	-	-

MONTICELLO Nuclear Generating Plant
3rd Interval ISI Plan Rev. 3 June 1, 1992 to May 31, 2002

Category, ItemNO, Class	Summary / CompID / System	Scope / Method / Procedure	Iso No. Comp. Desc. Code Case /Note		Period 1				Period 2				Period 3			
					1	2	3	4	1	2	3	4	1	2	3	4
B-O	102413		ISI Fig 2	ISI	-	-	-	-	-	-	-	-	-	-	-	-
B14.10	06-35 (Lower)		CRD Housing Weld	AUG	-	-	-	-	-	-	-	-	-	-	-	-
1	CRD Housings			OWN	-	-	-	-	-	-	-	-	-	-	-	-
				PRE	-	-	-	-	-	-	-	-	-	-	-	-
B-O	102414		ISI Fig 2	ISI	-	-	-	-	-	-	-	-	-	-	-	-
B14.10	06-35 (Upper)		CRD Housing Weld	AUG	-	-	-	-	-	-	-	-	-	-	-	-
1	CRD Housings			OWN	-	-	-	-	-	-	-	-	-	-	-	-
				PRE	-	-	-	-	-	-	-	-	-	-	-	-
B-G-2	102415		ISI Fig 2	ISI	-	-	-	-	-	-	-	-	-	-	-	-
B7.80	06-35B		CRD Housing Bolts	AUG	-	-	-	-	-	-	-	-	-	-	-	-
1	CRD Housings			OWN	-	-	-	-	-	-	-	-	-	-	-	-
				PRE	-	-	-	-	-	-	-	-	-	-	-	-
B-O	102416		ISI Fig 2	ISI	-	-	-	-	-	-	-	-	-	-	-	-
B14.10	06-39 (Lower)		CRD Housing Weld	AUG	-	-	-	-	-	-	-	-	-	-	-	-
1	CRD Housings			OWN	-	-	-	-	-	-	-	-	-	-	-	-
				PRE	-	-	-	-	-	-	-	-	-	-	-	-
B-O	102417		ISI Fig 2	ISI	-	-	-	-	-	-	-	-	-	-	-	-
B14.10	06-39 (Upper)		CRD Housing Weld	AUG	-	-	-	-	-	-	-	-	-	-	-	-
1	CRD Housings			OWN	-	-	-	-	-	-	-	-	-	-	-	-
				PRE	-	-	-	-	-	-	-	-	-	-	-	-
B-G-2	102418		ISI Fig 2	ISI	-	-	-	-	-	-	-	-	-	-	-	-
B7.80	06-39B		CRD Housing Bolts	AUG	-	-	-	-	-	-	-	-	-	-	-	-
1	CRD Housings			OWN	-	-	-	-	-	-	-	-	-	-	-	-
				PRE	-	-	-	-	-	-	-	-	-	-	-	-
B-O	102419		ISI Fig 2	ISI	-	-	-	-	-	-	-	-	-	-	-	-
B14.10	10-11 (Lower)		CRD Housing Weld	AUG	-	-	-	-	-	-	-	-	-	-	-	-
1	CRD Housings			OWN	-	-	-	-	-	-	-	-	-	-	-	-
				PRE	-	-	-	-	-	-	-	-	-	-	-	-
B-O	102420		ISI Fig 2	ISI	-	-	-	-	-	-	-	-	-	-	-	-
B14.10	10-11 (Upper)		CRD Housing Weld	AUG	-	-	-	-	-	-	-	-	-	-	-	-
1	CRD Housings			OWN	-	-	-	-	-	-	-	-	-	-	-	-
				PRE	-	-	-	-	-	-	-	-	-	-	-	-
B-G-2	102421		ISI Fig 2	ISI	-	-	-	-	-	-	-	-	-	-	-	-
B7.80	10-11B		CRD Housing Bolts	AUG	-	-	-	-	-	-	-	-	-	-	-	-
1	CRD Housings			OWN	-	-	-	-	-	-	-	-	-	-	-	-
				PRE	-	-	-	-	-	-	-	-	-	-	-	-
B-O	102422		ISI Fig 2	ISI	-	-	-	-	-	-	-	-	-	-	-	-
B14.10	10-15 (Lower)		CRD Housing Weld	AUG	-	-	-	-	-	-	-	-	-	-	-	-
1	CRD Housings			OWN	-	-	-	-	-	-	-	-	-	-	-	-
				PRE	-	-	-	-	-	-	-	-	-	-	-	-

MONTICELLO Nuclear Generating Plant
3rd Interval ISI Plan Rev. 3 June 1, 1992 to May 31, 2002

Category, ItemNO, Class	Summary / CompID / System	Scope / Method / Procedure	Iso No. Comp. Desc. Code Case /Note		Period 1				Period 2				Period 3			
					1	2	3	4	1	2	3	4	1	2	3	4
B-O	102433		ISI Fig 2	ISI	-	-	-	-	-	-	-	-	-	-	-	-
B14.10	10-43 (Lower)		CRD Housing Weld	AUG	-	-	-	-	-	-	-	-	-	-	-	-
1	CRD Housings			OWN	-	-	-	-	-	-	-	-	-	-	-	-
				PRE	-	-	-	-	-	-	-	-	-	-	-	-
B-O	102434		ISI Fig 2	ISI	-	-	-	-	-	-	-	-	-	-	-	-
B14.10	10-43 (Upper)		CRD Housing Weld	AUG	-	-	-	-	-	-	-	-	-	-	-	-
1	CRD Housings			OWN	-	-	-	-	-	-	-	-	-	-	-	-
				PRE	-	-	-	-	-	-	-	-	-	-	-	-
B-G-2	102435		ISI Fig 2	ISI	-	-	-	-	-	-	-	-	-	-	-	-
B7.80	10-43B		CRD Housing Bolts	AUG	-	-	-	-	-	-	-	-	-	-	-	-
1	CRD Housings			OWN	-	-	-	-	-	-	-	-	-	-	-	-
				PRE	-	-	-	-	-	-	-	-	-	-	-	-
B-O	102436		ISI Fig 2	ISI	-	-	-	-	-	-	-	-	-	-	-	-
B14.10	14-07 (Lower)		CRD Housing Weld	AUG	-	-	-	-	-	-	-	-	-	-	-	-
1	CRD Housings			OWN	-	-	-	-	-	-	-	-	-	-	-	-
				PRE	-	-	-	-	-	-	-	-	-	-	-	-
B-O	102437		ISI Fig 2	ISI	-	-	-	-	-	-	-	-	-	-	-	-
B14.10	14-07 (Upper)		CRD Housing Weld	AUG	-	-	-	-	-	-	-	-	-	-	-	-
1	CRD Housings			OWN	-	-	-	-	-	-	-	-	-	-	-	-
				PRE	-	-	-	-	-	-	-	-	-	-	-	-
B-G-2	102438		ISI Fig 2	ISI	-	-	-	-	-	-	-	-	-	-	-	-
B7.80	14-07B		CRD Housing Bolts	AUG	-	-	-	-	-	-	-	-	-	-	-	-
1	CRD Housings			OWN	-	-	-	-	-	-	-	-	-	-	-	-
				PRE	-	-	-	-	-	-	-	-	-	-	-	-
B-O	102439		ISI Fig 2	ISI	-	-	-	-	-	-	-	-	-	-	-	-
B14.10	14-11 (Lower)		CRD Housing Weld	AUG	-	-	-	-	-	-	-	-	-	-	-	-
1	CRD Housings			OWN	-	-	-	-	-	-	-	-	-	-	-	-
				PRE	-	-	-	-	-	-	-	-	-	-	-	-
B-O	102440		ISI Fig 2	ISI	-	-	-	-	-	-	-	-	-	-	-	-
B14.10	14-11 (Upper)		CRD Housing Weld	AUG	-	-	-	-	-	-	-	-	-	-	-	-
1	CRD Housings			OWN	-	-	-	-	-	-	-	-	-	-	-	-
				PRE	-	-	-	-	-	-	-	-	-	-	-	-
B-G-2	102441		ISI Fig 2	ISI	-	-	-	-	-	-	-	-	-	-	-	-
B7.80	14-11B		CRD Housing Bolts	AUG	-	-	-	-	-	-	-	-	-	-	-	-
1	CRD Housings			OWN	-	-	-	-	-	-	-	-	-	-	-	-
				PRE	-	-	-	-	-	-	-	-	-	-	-	-
B-G-2	102442		ISI Fig 2	ISI	-	-	-	-	-	-	-	-	-	-	-	-
B7.80	14-15B		CRD Housing Bolts	AUG	-	-	-	-	-	-	-	-	-	-	-	-
1	CRD Housings			OWN	-	-	-	-	-	-	-	-	-	-	-	-
				PRE	-	-	-	-	-	-	-	-	-	-	-	-

MONTICELLO Nuclear Generating Plant
3rd Interval ISI Plan Rev. 3 June 1, 1992 to May 31, 2002

Category, ItemNO, Class	Summary / CompID / System	Scope / Method / Procedure	Iso No. Comp. Desc. Code Case /Note		Period 1				Period 2				Period 3			
					1	2	3	4	1	2	3	4	1	2	3	4
B-O	102423		ISI Fig 2	ISI	-	-	-	-	-	-	-	-	-	-	-	-
B14.10	10-15 (upper)		CRD Housing Weld	AUG	-	-	-	-	-	-	-	-	-	-	-	-
1	CRD Housings			OWN	-	-	-	-	-	-	-	-	-	-	-	-
				PRE	-	-	-	-	-	-	-	-	-	-	-	-
B-G-2	102424		ISI Fig 2	ISI	-	-	-	-	-	-	-	-	-	-	-	-
B7.80	10-15B		CRD Housing Bolts	AUG	-	-	-	-	-	-	-	-	-	-	-	-
1	CRD Housings			OWN	-	-	-	-	-	-	-	-	-	-	-	-
				PRE	-	-	-	-	-	-	-	-	-	-	-	-
B-G-2	102425		ISI Fig 2	ISI	-	-	-	-	-	-	-	-	-	-	-	-
B7.80	10-19B		CRD Housing Bolts	AUG	-	-	-	-	-	-	-	-	-	-	-	-
1	CRD Housings			OWN	-	-	-	-	-	-	-	-	-	-	-	-
				PRE	-	-	-	-	-	-	-	-	-	-	-	-
B-G-2	102426		ISI Fig 2	ISI	-	-	-	-	-	-	-	-	-	-	-	-
B7.80	10-23B		CRD Housing Bolts	AUG	-	-	-	-	-	-	-	-	-	-	-	-
1	CRD Housings			OWN	-	-	-	-	-	-	-	-	-	-	-	-
				PRE	-	-	-	-	-	-	-	-	-	-	-	-
B-G-2	102427		ISI Fig 2	ISI	-	-	-	-	-	-	-	-	-	-	-	-
B7.80	10-27B		CRD Housing Bolts	AUG	-	-	-	-	-	-	-	-	-	-	-	-
1	CRD Housings			OWN	-	-	-	-	-	-	-	-	-	-	-	-
				PRE	-	-	-	-	-	-	-	-	-	-	-	-
B-G-2	102428		ISI Fig 2	ISI	-	-	-	-	-	-	-	-	-	-	-	-
B7.80	10-31B		CRD Housing Bolts	AUG	-	-	-	-	-	-	-	-	-	-	-	-
1	CRD Housings			OWN	-	-	-	-	-	-	-	-	-	-	-	-
				PRE	-	-	-	-	-	-	-	-	-	-	-	-
B-G-2	102429		ISI Fig 2	ISI	-	-	-	-	-	-	-	-	-	-	-	-
B7.80	10-35B		CRD Housing Bolts	AUG	-	-	-	-	-	-	-	-	-	-	-	-
1	CRD Housings			OWN	-	-	-	-	-	-	-	-	-	-	-	-
				PRE	-	-	-	-	-	-	-	-	-	-	-	-
B-O	102430		ISI Fig 2	ISI	-	-	-	-	-	-	-	-	-	-	-	-
B14.10	10-39 (Lower)		CRD Housing Weld	AUG	-	-	-	-	-	-	-	-	-	-	-	-
1	CRD Housings			OWN	-	-	-	-	-	-	-	-	-	-	-	-
				PRE	-	-	-	-	-	-	-	-	-	-	-	-
B-O	102431		ISI Fig 2	ISI	-	-	-	-	-	-	-	-	-	-	-	-
B14.10	10-39 (Upper)		CRD Housing Weld	AUG	-	-	-	-	-	-	-	-	-	-	-	-
1	CRD Housings			OWN	-	-	-	-	-	-	-	-	-	-	-	-
				PRE	-	-	-	-	-	-	-	-	-	-	-	-
B-G-2	102432		ISI Fig 2	ISI	-	-	-	-	-	-	-	-	-	-	-	-
B7.80	10-39B		CRD Housing Bolts	AUG	-	-	-	-	-	-	-	-	-	-	-	-
1	CRD Housings			OWN	-	-	-	-	-	-	-	-	-	-	-	-
				PRE	-	-	-	-	-	-	-	-	-	-	-	-

MONTICELLO Nuclear Generating Plant
3rd Interval ISI Plan Rev. 3 June 1, 1992 to May 31, 2002

Category, ItemNO, Class	Summary / CompID / System	Scope / Method / Procedure	Iso No. Comp. Desc. Code Case /Note		Period 1				Period 2				Period 3			
					1	2	3	4	1	2	3	4	1	2	3	4
B-O	102453		ISI Fig 2	ISI	-	-	-	-	-	-	-	-	-	-	-	-
B14.10	14-47 (Upper)		CRD Housing Weld	AUG	-	-	-	-	-	-	-	-	-	-	-	-
1	CRD Housings			OWN	-	-	-	-	-	-	-	-	-	-	-	-
				PRE	-	-	-	-	-	-	-	-	-	-	-	-
B-G-2	102454		ISI Fig 2	ISI	-	-	-	-	-	-	-	-	-	-	-	-
B7.80	14-47B		CRD Housing Bolts	AUG	-	-	-	-	-	-	-	-	-	-	-	-
1	CRD Housings			OWN	-	-	-	-	-	-	-	-	-	-	-	-
				PRE	-	-	-	-	-	-	-	-	-	-	-	-
B-O	102455		ISI Fig 2	ISI	-	-	-	-	-	-	-	-	-	-	-	-
B14.10	18-07 (Lower)		CRD Housing Weld	AUG	-	-	-	-	-	-	-	-	-	-	-	-
1	CRD Housings			OWN	-	-	-	-	-	-	-	-	-	-	-	-
				PRE	-	-	-	-	-	-	-	-	-	-	-	-
B-O	102456		ISI Fig 2	ISI	-	-	-	-	-	-	-	-	-	-	-	-
B14.10	18-07 (Upper)		CRD Housing Weld	AUG	-	-	-	-	-	-	-	-	-	-	-	-
1	CRD Housings			OWN	-	-	-	-	-	-	-	-	-	-	-	-
				PRE	-	-	-	-	-	-	-	-	-	-	-	-
B-G-2	102457		ISI Fig 2	ISI	-	-	-	-	-	-	-	-	-	-	-	-
B7.80	18-07B		CRD Housing Bolts	AUG	-	-	-	-	-	-	-	-	-	-	-	-
1	CRD Housings			OWN	-	-	-	-	-	-	-	-	-	-	-	-
				PRE	-	-	-	-	-	-	-	-	-	-	-	-
B-G-2	102458		ISI Fig 2	ISI	-	-	-	-	-	-	-	-	-	-	-	-
B7.80	18-11B		CRD Housing Bolts	AUG	-	-	-	-	-	-	-	-	-	-	-	-
1	CRD Housings			OWN	-	-	-	-	-	-	-	-	-	-	-	-
				PRE	-	-	-	-	-	-	-	-	-	-	-	-
B-G-2	102459		ISI Fig 2	ISI	-	-	-	-	-	-	-	-	-	-	-	-
B7.80	18-15B		CRD Housing Bolts	AUG	-	-	-	-	-	-	-	-	-	-	-	-
1	CRD Housings			OWN	-	-	-	-	-	-	-	-	-	-	-	-
				PRE	-	-	-	-	-	-	-	-	-	-	-	-
B-G-2	102460		ISI Fig 2	ISI	-	-	-	-	-	-	-	-	-	-	-	-
B7.80	18-19B		CRD Housing Bolts	AUG	-	-	-	-	-	-	-	-	-	-	-	-
1	CRD Housings			OWN	-	-	-	-	-	-	-	-	-	-	-	-
				PRE	-	-	-	-	-	-	-	-	-	-	-	-
B-G-2	102461		ISI Fig 2	ISI	-	-	-	-	-	-	-	-	-	-	-	-
B7.80	18-23B		CRD Housing Bolts	AUG	-	-	-	-	-	-	-	-	-	-	-	-
1	CRD Housings			OWN	-	-	-	-	-	-	-	-	-	-	-	-
				PRE	-	-	-	-	-	-	-	-	-	-	-	-
B-G-2	102462		ISI Fig 2	ISI	-	-	-	-	-	-	-	-	-	-	-	-
B7.80	18-27B		CRD Housing Bolts	AUG	-	-	-	-	-	-	-	-	-	-	-	-
1	CRD Housings			OWN	-	-	-	-	-	-	-	-	-	-	-	-
				PRE	-	-	-	-	-	-	-	-	-	-	-	-

MONTICELLO Nuclear Generating Plant
3rd Interval ISI Plan Rev. 3 June 1, 1992 to May 31, 2002

Category, ItemNO, Class	Summary / CompID / System	Scope / Method / Procedure	Iso No. Comp. Desc. Code Case /Note		Period 1				Period 2				Period 3			
					1	2	3	4	1	2	3	4	1	2	3	4
B-G-2	102443		ISI Fig 2	ISI	-	-	-	-	-	-	-	-	-	-	-	-
B7.80	14-19B		CRD Housing Bolts	AUG	-	-	-	-	-	-	-	-	-	-	-	-
1	CRD Housings			OWN	-	-	-	-	-	-	-	-	-	-	-	-
				PRE	-	-	-	-	-	-	-	-	-	-	-	-
B-G-2	102444		ISI Fig 2	ISI	-	-	-	-	-	-	-	-	-	-	-	-
B7.80	14-23B		CRD Housing Bolts	AUG	-	-	-	-	-	-	-	-	-	-	-	-
1	CRD Housings			OWN	-	-	-	-	-	-	-	-	-	-	-	-
				PRE	-	-	-	-	-	-	-	-	-	-	-	-
B-G-2	102445		ISI Fig 2	ISI	-	-	-	-	-	-	-	-	-	-	-	-
B7.80	14-27B		CRD Housing Bolts	AUG	-	-	-	-	-	-	-	-	-	-	-	-
1	CRD Housings			OWN	-	-	-	-	-	-	-	-	-	-	-	-
				PRE	-	-	-	-	-	-	-	-	-	-	-	-
B-G-2	102446		ISI Fig 2	ISI	-	-	-	-	-	-	-	-	-	-	-	-
B7.80	14-31B		CRD Housing Bolts	AUG	-	-	-	-	-	-	-	-	-	-	-	-
1	CRD Housings			OWN	-	-	-	-	-	-	-	-	-	-	-	-
				PRE	-	-	-	-	-	-	-	-	-	-	-	-
B-G-2	102447		ISI Fig 2	ISI	-	-	-	-	-	-	-	-	-	-	-	-
B7.80	14-35B		CRD Housing Bolts	AUG	-	-	-	-	-	-	-	-	-	-	-	-
1	CRD Housings			OWN	-	-	-	-	-	-	-	-	-	-	-	-
				PRE	-	-	-	-	-	-	-	-	-	-	-	-
B-G-2	102448		ISI Fig 2	ISI	-	-	-	-	-	-	-	-	-	-	-	-
B7.80	14-39B		CRD Housing Bolts	AUG	-	-	-	-	-	-	-	-	-	-	-	-
1	CRD Housings			OWN	-	-	-	-	-	-	-	-	-	-	-	-
				PRE	-	-	-	-	-	-	-	-	-	-	-	-
B-O	102449		ISI Fig 2	ISI	-	-	-	-	-	-	-	-	-	-	-	-
B14.10	14-43 (Lower)		CRD Housing Weld	AUG	-	-	-	-	-	-	-	-	-	-	-	-
1	CRD Housings			OWN	-	-	-	-	-	-	-	-	-	-	-	-
				PRE	-	-	-	-	-	-	-	-	-	-	-	-
B-O	102450		ISI Fig 2	ISI	-	-	-	-	-	-	-	-	-	-	-	-
B14.10	14-43 (Upper)		CRD Housing Weld	AUG	-	-	-	-	-	-	-	-	-	-	-	-
1	CRD Housings			OWN	-	-	-	-	-	-	-	-	-	-	-	-
				PRE	-	-	-	-	-	-	-	-	-	-	-	-
B-G-2	102451		ISI Fig 2	ISI	-	-	-	-	-	-	-	-	-	-	-	-
B7.80	14-43B		CRD Housing Bolts	AUG	-	-	-	-	-	-	-	-	-	-	-	-
1	CRD Housings			OWN	-	-	-	-	-	-	-	-	-	-	-	-
				PRE	-	-	-	-	-	-	-	-	-	-	-	-
B-O	102452		ISI Fig 2	ISI	-	-	-	-	-	-	-	-	-	-	-	-
B14.10	14-47 (Lower)		CRD Housing Weld	AUG	-	-	-	-	-	-	-	-	-	-	-	-
1	CRD Housings			OWN	-	-	-	-	-	-	-	-	-	-	-	-
				PRE	-	-	-	-	-	-	-	-	-	-	-	-

MONTICELLO Nuclear Generating Plant
3rd Interval ISI Plan Rev. 3 June 1, 1992 to May 31, 2002

Category, ItemNO, Class	Summary / CompID / System	Scope / Method / Procedure	Iso No. Comp. Desc. Code Case /Note		Period 1				Period 2				Period 3			
					1	2	3	4	1	2	3	4	1	2	3	4
B-O	102473		ISI Fig 2	ISI	-	-	-	-	-	-	-	-	-	-	-	-
B14.10	22-07 (Lower)		CRD Housing Weld	AUG	-	-	-	-	-	-	-	-	-	-	-	-
1	CRD Housings			OWN	-	-	-	-	-	-	-	-	-	-	-	-
				PRE	-	-	-	-	-	-	-	-	-	-	-	-
B-O	102474		ISI Fig 2	ISI	-	-	-	-	-	-	-	-	-	-	-	-
B14.10	22-07 (Upper)		CRD Housing Weld	AUG	-	-	-	-	-	-	-	-	-	-	-	-
1	CRD Housings			OWN	-	-	-	-	-	-	-	-	-	-	-	-
				PRE	-	-	-	-	-	-	-	-	-	-	-	-
B-G-2	102475		ISI Fig 2	ISI	-	-	-	-	-	-	-	-	-	-	-	-
B7.80	22-07B		CRD Housing Bolts	AUG	-	-	-	-	-	-	-	-	-	-	-	-
1	CRD Housings			OWN	-	-	-	-	-	-	-	-	-	-	-	-
				PRE	-	-	-	-	-	-	-	-	-	-	-	-
B-G-2	102476		ISI Fig 2	ISI	-	-	-	-	-	-	-	-	-	-	-	-
B7.80	22-11B		CRD Housing Bolts	AUG	-	-	-	-	-	-	-	-	-	-	-	-
1	CRD Housings			OWN	-	-	-	-	-	-	-	-	-	-	-	-
				PRE	-	-	-	-	-	-	-	-	-	-	-	-
B-G-2	102477		ISI Fig 2	ISI	-	-	-	-	-	-	-	-	-	-	-	-
B7.80	22-15B		CRD Housing Bolts	AUG	-	-	-	-	-	-	-	-	-	-	-	-
1	CRD Housings			OWN	-	-	-	-	-	-	-	-	-	-	-	-
				PRE	-	-	-	-	-	-	-	-	-	-	-	-
B-G-2	102478	ISI/VT/ISI-VT-1.0	ISI Fig 2	ISI	-	-	-	-	-	-	-	-	s	-	-	-
B7.80	22-19B		CRD Housing Bolts	AUG	-	-	-	-	-	-	-	-	-	-	-	-
1	CRD Housings			OWN	-	-	-	-	-	-	-	-	-	-	-	-
				PRE	-	-	-	-	-	-	-	-	-	-	-	-
B-G-2	102479		ISI Fig 2	ISI	-	-	-	-	-	-	-	-	-	-	-	-
B7.80	22-23B		CRD Housing Bolts	AUG	-	-	-	-	-	-	-	-	-	-	-	-
1	CRD Housings			OWN	-	-	-	-	-	-	-	-	-	-	-	-
				PRE	-	-	-	-	-	-	-	-	-	-	-	-
B-G-2	102480		ISI Fig 2	ISI	-	-	-	-	-	-	-	-	-	-	-	-
B7.80	22-27B		CRD Housing Bolts	AUG	-	-	-	-	-	-	-	-	-	-	-	-
1	CRD Housings			OWN	-	-	-	-	-	-	-	-	-	-	-	-
				PRE	-	-	-	-	-	-	-	-	-	-	-	-
B-G-2	102481		ISI Fig 2	ISI	-	-	-	-	-	-	-	-	-	-	-	-
B7.80	22-31B		CRD Housing Bolts	AUG	-	-	-	-	-	-	-	-	-	-	-	-
1	CRD Housings			OWN	-	-	-	-	-	-	-	-	-	-	-	-
				PRE	-	-	-	-	-	-	-	-	-	-	-	-
B-G-2	102482	ISI/VT/ISI-VT-1.0	ISI Fig 2	ISI	-	-	-	-	-	-	-	-	s	-	-	-
B7.80	22-35B		CRD Housing Bolts	AUG	-	-	-	-	-	-	-	-	-	-	-	-
1	CRD Housings			OWN	-	-	-	-	-	-	-	-	-	-	-	-
				PRE	-	-	-	-	-	-	-	-	-	-	-	-

MONTICELLO Nuclear Generating Plant
3rd Interval ISI Plan Rev. 3 June 1, 1992 to May 31, 2002

Category, ItemNO, Class	Summary / CompID / System	Scope / Method / Procedure	Iso No. Comp. Desc. Code Case /Note		Period 1				Period 2				Period 3			
					1	2	3	4	1	2	3	4	1	2	3	4
B-G-2	102463		ISI Fig 2	ISI	-	-	-	-	-	-	-	-	-	-	-	-
B7.80	18-31B		CRD Housing Bolts	AUG	-	-	-	-	-	-	-	-	-	-	-	-
1	CRD Housings			OWN	-	-	-	-	-	-	-	-	-	-	-	-
				PRE	-	-	-	-	-	-	-	-	-	-	-	-
B-G-2	102464		ISI Fig 2	ISI	-	-	-	-	-	-	-	-	-	-	-	-
B7.80	18-35B		CRD Housing Bolts	AUG	-	-	-	-	-	-	-	-	-	-	-	-
1	CRD Housings			OWN	-	-	-	-	-	-	-	-	-	-	-	-
				PRE	-	-	-	-	-	-	-	-	-	-	-	-
B-G-2	102465		ISI Fig 2	ISI	-	-	-	-	-	-	-	-	-	-	-	-
B7.80	18-39B		CRD Housing Bolts	AUG	-	-	-	-	-	-	-	-	-	-	-	-
1	CRD Housings			OWN	-	-	-	-	-	-	-	-	-	-	-	-
				PRE	-	-	-	-	-	-	-	-	-	-	-	-
B-G-2	102466		ISI Fig 2	ISI	-	-	-	-	-	-	-	-	-	-	-	-
B7.80	18-43B		CRD Housing Bolts	AUG	-	-	-	-	-	-	-	-	-	-	-	-
1	CRD Housings			OWN	-	-	-	-	-	-	-	-	-	-	-	-
				PRE	-	-	-	-	-	-	-	-	-	-	-	-
B-O	102467		ISI Fig 2	ISI	-	-	-	-	-	-	-	-	-	-	-	-
B14.10	18-47 (Lower)		CRD Housing Weld	AUG	-	-	-	-	-	-	-	-	-	-	-	-
1	CRD Housings			OWN	-	-	-	-	-	-	-	-	-	-	-	-
				PRE	-	-	-	-	-	-	-	-	-	-	-	-
B-O	102468		ISI Fig 2	ISI	-	-	-	-	-	-	-	-	-	-	-	-
B14.10	18-47 (Upper)		CRD Housing Weld	AUG	-	-	-	-	-	-	-	-	-	-	-	-
1	CRD Housings			OWN	-	-	-	-	-	-	-	-	-	-	-	-
				PRE	-	-	-	-	-	-	-	-	-	-	-	-
B-G-2	102469		ISI Fig 2	ISI	-	-	-	-	-	-	-	-	-	-	-	-
B7.80	18-47B		CRD Housing Bolts	AUG	-	-	-	-	-	-	-	-	-	-	-	-
1	CRD Housings			OWN	-	-	-	-	-	-	-	-	-	-	-	-
				PRE	-	-	-	-	-	-	-	-	-	-	-	-
B-O	102470		ISI Fig 2	ISI	-	-	-	-	-	-	-	-	-	-	-	-
B14.10	22-03 (Lower)		CRD Housing Weld	AUG	-	-	-	-	-	-	-	-	-	-	-	-
1	CRD Housings			OWN	-	-	-	-	-	-	-	-	-	-	-	-
				PRE	-	-	-	-	-	-	-	-	-	-	-	-
B-O	102471		ISI Fig 2	ISI	-	-	-	-	-	-	-	-	-	-	-	-
B14.10	22-03 (Upper)		CRD Housing Weld	AUG	-	-	-	-	-	-	-	-	-	-	-	-
1	CRD Housings			OWN	-	-	-	-	-	-	-	-	-	-	-	-
				PRE	-	-	-	-	-	-	-	-	-	-	-	-
B-G-2	102472		ISI Fig 2	ISI	-	-	-	-	-	-	-	-	-	-	-	-
B7.80	22-03B		CRD Housing Bolts	AUG	-	-	-	-	-	-	-	-	-	-	-	-
1	CRD Housings			OWN	-	-	-	-	-	-	-	-	-	-	-	-
				PRE	-	-	-	-	-	-	-	-	-	-	-	-

MONTICELLO Nuclear Generating Plant
3rd Interval ISI Plan Rev. 3 June 1, 1992 to May 31, 2002

Category, ItemNO, Class	Summary / CompID / System	Scope / Method / Procedure	Iso No. Comp. Desc. Code Case /Note		Period 1				Period 2				Period 3			
					1	2	3	4	1	2	3	4	1	2	3	4
B-G-2	102493		ISI Fig 2	ISI	-	-	-	-	-	-	-	-	-	-	-	-
B7.80	26-03B		CRD Housing Bolts	AUG	-	-	-	-	-	-	-	-	-	-	-	-
1	CRD Housings			OWN	-	-	-	-	-	-	-	-	-	-	-	-
				PRE	-	-	-	-	-	-	-	-	-	-	-	-
B-G-2	102494		ISI Fig 2	ISI	-	-	-	-	-	-	-	-	-	-	-	-
B7.80	26-07B		CRD Housing Bolts	AUG	-	-	-	-	-	-	-	-	-	-	-	-
1	CRD Housings			OWN	-	-	-	-	-	-	-	-	-	-	-	-
				PRE	-	-	-	-	-	-	-	-	-	-	-	-
B-G-2	102495		ISI Fig 2	ISI	-	-	-	-	-	-	-	-	-	-	-	-
B7.80	26-11B		CRD Housing Bolts	AUG	-	-	-	-	-	-	-	-	-	-	-	-
1	CRD Housings			OWN	-	-	-	-	-	-	-	-	-	-	-	-
				PRE	-	-	-	-	-	-	-	-	-	-	-	-
B-G-2	102496	ISI/VT/ISI-VT-1.0	ISI Fig 2	ISI	-	-	-	-	-	-	-	-	s	-	-	-
B7.80	26-15B		CRD Housing Bolts	AUG	-	-	-	-	-	-	-	-	-	-	-	-
1	CRD Housings			OWN	-	-	-	-	-	-	-	-	-	-	-	-
				PRE	-	-	-	-	-	-	-	-	-	-	-	-
B-G-2	102497		ISI Fig 2	ISI	-	-	-	-	-	-	-	-	-	-	-	-
B7.80	26-19B		CRD Housing Bolts	AUG	-	-	-	-	-	-	-	-	-	-	-	-
1	CRD Housings			OWN	-	-	-	-	-	-	-	-	-	-	-	-
				PRE	-	-	-	-	-	-	-	-	-	-	-	-
B-G-2	102498		ISI Fig 2	ISI	-	-	-	-	-	-	-	-	-	-	-	-
B7.80	26-23B		CRD Housing Bolts	AUG	-	-	-	-	-	-	-	-	-	-	-	-
1	CRD Housings			OWN	-	-	-	-	-	-	-	-	-	-	-	-
				PRE	-	-	-	-	-	-	-	-	-	-	-	-
B-G-2	102499		ISI Fig 2	ISI	-	-	-	-	-	-	-	-	-	-	-	-
B7.80	26-27B		CRD Housing Bolts	AUG	-	-	-	-	-	-	-	-	-	-	-	-
1	CRD Housings			OWN	-	-	-	-	-	-	-	-	-	-	-	-
				PRE	-	-	-	-	-	-	-	-	-	-	-	-
B-G-2	102500	ISI/VT/ISI-VT-1.0	ISI Fig 2	ISI	-	-	-	-	-	-	-	-	s	-	-	-
B7.80	26-31B		CRD Housing Bolts	AUG	-	-	-	-	-	-	-	-	-	-	-	-
1	CRD Housings			OWN	-	-	-	-	-	-	-	-	-	-	-	-
				PRE	-	-	-	-	-	-	-	-	-	-	-	-
B-G-2	102501	ISI/VT/ISI-VT-1.0	ISI Fig 2	ISI	-	-	-	-	-	-	-	-	s	-	-	-
B7.80	26-35B		CRD Housing Bolts	AUG	-	-	-	-	-	-	-	-	-	-	-	-
1	CRD Housings			OWN	-	-	-	-	-	-	-	-	-	-	-	-
				PRE	-	-	-	-	-	-	-	-	-	-	-	-
B-G-2	102502		ISI Fig 2	ISI	-	-	-	-	-	-	-	-	-	-	-	-
B7.80	26-39B		CRD Housing Bolts	AUG	-	-	-	-	-	-	-	-	-	-	-	-
1	CRD Housings			OWN	-	-	-	-	-	-	-	-	-	-	-	-
				PRE	-	-	-	-	-	-	-	-	-	-	-	-

MONTICELLO Nuclear Generating Plant
3rd Interval ISI Plan Rev. 3 June 1, 1992 to May 31, 2002

Category, ItemNO, Class	Summary / CompID / System	Scope / Method / Procedure	Iso No. Comp. Desc. Code Case /Note		Period 1				Period 2				Period 3			
					1	2	3	4	1	2	3	4	1	2	3	4
B-G-2	102483	ISI/VT/ISI-VT-1.0	ISI Fig 2	ISI	-	-	-	-	-	-	-	-	s	-	-	-
B7.80	22-39B		CRD Housing Bolts	AUG	-	-	-	-	-	-	-	-	-	-	-	-
1	CRD Housings			OWN	-	-	-	-	-	-	-	-	-	-	-	-
				PRE	-	-	-	-	-	-	-	-	-	-	-	-
B-G-2	102484		ISI Fig 2	ISI	-	-	-	-	-	-	-	-	-	-	-	-
B7.80	22-43B		CRD Housing Bolts	AUG	-	-	-	-	-	-	-	-	-	-	-	-
1	CRD Housings			OWN	-	-	-	-	-	-	-	-	-	-	-	-
				PRE	-	-	-	-	-	-	-	-	-	-	-	-
B-O	102485		ISI Fig 2	ISI	-	-	-	-	-	-	-	-	-	-	-	-
B14.10	22-47 (Lower)		CRD Housing Weld	AUG	-	-	-	-	-	-	-	-	-	-	-	-
1	CRD Housings			OWN	-	-	-	-	-	-	-	-	-	-	-	-
				PRE	-	-	-	-	-	-	-	-	-	-	-	-
B-O	102486		ISI Fig 2	ISI	-	-	-	-	-	-	-	-	-	-	-	-
B14.10	22-47 (Upper)		CRD Housing Weld	AUG	-	-	-	-	-	-	-	-	-	-	-	-
1	CRD Housings			OWN	-	-	-	-	-	-	-	-	-	-	-	-
				PRE	-	-	-	-	-	-	-	-	-	-	-	-
B-G-2	102487		ISI Fig 2	ISI	-	-	-	-	-	-	-	-	-	-	-	-
B7.80	22-47B		CRD Housing Bolts	AUG	-	-	-	-	-	-	-	-	-	-	-	-
1	CRD Housings			OWN	-	-	-	-	-	-	-	-	-	-	-	-
				PRE	-	-	-	-	-	-	-	-	-	-	-	-
B-O	102488		ISI Fig 2	ISI	-	-	-	-	-	-	-	-	-	-	-	-
B14.10	22-51 (Lower)		CRD Housing Weld	AUG	-	-	-	-	-	-	-	-	-	-	-	-
1	CRD Housings			OWN	-	-	-	-	-	-	-	-	-	-	-	-
				PRE	-	-	-	-	-	-	-	-	-	-	-	-
B-O	102489		ISI Fig 2	ISI	-	-	-	-	-	-	-	-	-	-	-	-
B14.10	22-51 (Upper)		CRD Housing Weld	AUG	-	-	-	-	-	-	-	-	-	-	-	-
1	CRD Housings			OWN	-	-	-	-	-	-	-	-	-	-	-	-
				PRE	-	-	-	-	-	-	-	-	-	-	-	-
B-G-2	102490		ISI Fig 2	ISI	-	-	-	-	-	-	-	-	-	-	-	-
B7.80	22-51B		CRD Housing Bolts	AUG	-	-	-	-	-	-	-	-	-	-	-	-
1	CRD Housings			OWN	-	-	-	-	-	-	-	-	-	-	-	-
				PRE	-	-	-	-	-	-	-	-	-	-	-	-
B-O	102491		ISI Fig 2	ISI	-	-	-	-	-	-	-	-	-	-	-	-
B14.10	26-03 (Lower)		CRD Housing Weld	AUG	-	-	-	-	-	-	-	-	-	-	-	-
1	CRD Housings			OWN	-	-	-	-	-	-	-	-	-	-	-	-
				PRE	-	-	-	-	-	-	-	-	-	-	-	-
B-O	102492		ISI Fig 2	ISI	-	-	-	-	-	-	-	-	-	-	-	-
B14.10	26-03 (Upper)		CRD Housing Weld	AUG	-	-	-	-	-	-	-	-	-	-	-	-
1	CRD Housings			OWN	-	-	-	-	-	-	-	-	-	-	-	-
				PRE	-	-	-	-	-	-	-	-	-	-	-	-

MONTICELLO Nuclear Generating Plant
3rd Interval ISI Plan Rev. 3 June 1, 1992 to May 31, 2002

Category, ItemNO, Class	Summary / CompID / System	Scope / Method / Procedure	Iso No. Comp. Desc. Code Case /Note		Period 1				Period 2				Period 3			
					1	2	3	4	1	2	3	4	1	2	3	4
B-G-2	102513		ISI Fig 2	ISI	-	-	-	-	-	-	-	-	-	-	-	-
B7.80	30-07B		CRD Housing Bolts	AUG	-	-	-	-	-	-	-	-	-	-	-	-
1	CRD Housings			OWN	-	-	-	-	-	-	-	-	-	-	-	-
				PRE	-	-	-	-	-	-	-	-	-	-	-	-
B-G-2	102514		ISI Fig 2	ISI	-	-	-	-	-	-	-	-	-	-	-	-
B7.80	30-11B		CRD Housing Bolts	AUG	-	-	-	-	-	-	-	-	-	-	-	-
1	CRD Housings			OWN	-	-	-	-	-	-	-	-	-	-	-	-
				PRE	-	-	-	-	-	-	-	-	-	-	-	-
B-G-2	102515		ISI Fig 2	ISI	-	-	-	-	-	-	-	-	-	-	-	-
B7.80	30-15B		CRD Housing Bolts	AUG	-	-	-	-	-	-	-	-	-	-	-	-
1	CRD Housings			OWN	-	-	-	-	-	-	-	-	-	-	-	-
				PRE	-	-	-	-	-	-	-	-	-	-	-	-
B-G-2	102516	ISI/VT/ISI-VT-1.0	ISI Fig 2	ISI	-	-	-	-	-	-	-	-	s	-	-	-
B7.80	30-19B		CRD Housing Bolts	AUG	-	-	-	-	-	-	-	-	-	-	-	-
1	CRD Housings			OWN	-	-	-	-	-	-	-	-	-	-	-	-
				PRE	-	-	-	-	-	-	-	-	-	-	-	-
B-G-2	102517		ISI Fig 2	ISI	-	-	-	-	-	-	-	-	-	-	-	-
B7.80	30-23B		CRD Housing Bolts	AUG	-	-	-	-	-	-	-	-	-	-	-	-
1	CRD Housings			OWN	-	-	-	-	-	-	-	-	-	-	-	-
				PRE	-	-	-	-	-	-	-	-	-	-	-	-
B-G-2	102518		ISI Fig 2	ISI	-	-	-	-	-	-	-	-	-	-	-	-
B7.80	30-31B		CRD Housing Bolts	AUG	-	-	-	-	-	-	-	-	-	-	-	-
1	CRD Housings			OWN	-	-	-	-	-	-	-	-	-	-	-	-
				PRE	-	-	-	-	-	-	-	-	-	-	-	-
B-G-2	102519	ISI/VT/ISI-VT-1.0	ISI Fig 2	ISI	-	-	-	-	-	-	-	-	s	-	-	-
B7.80	30-35B		CRD Housing Bolts	AUG	-	-	-	-	-	-	-	-	-	-	-	-
1	CRD Housings			OWN	-	-	-	-	-	-	-	-	-	-	-	-
				PRE	-	-	-	-	-	-	-	-	-	-	-	-
B-G-2	102520		ISI Fig 2	ISI	-	-	-	-	-	-	-	-	-	-	-	-
B7.80	30-39B		CRD Housing Bolts	AUG	-	-	-	-	-	-	-	-	-	-	-	-
1	CRD Housings			OWN	-	-	-	-	-	-	-	-	-	-	-	-
				PRE	-	-	-	-	-	-	-	-	-	-	-	-
B-G-2	102521		ISI Fig 2	ISI	-	-	-	-	-	-	-	-	-	-	-	-
B7.80	30-43B		CRD Housing Bolts	AUG	-	-	-	-	-	-	-	-	-	-	-	-
1	CRD Housings			OWN	-	-	-	-	-	-	-	-	-	-	-	-
				PRE	-	-	-	-	-	-	-	-	-	-	-	-
B-O	102522		ISI Fig 2	ISI	-	-	-	-	-	-	-	-	-	-	-	-
B14.10	30-47 (Lower)		CRD Housing Weld	AUG	-	-	-	-	-	-	-	-	-	-	-	-
1	CRD Housings			OWN	-	-	-	-	-	-	-	-	-	-	-	-
				PRE	-	-	-	-	-	-	-	-	-	-	-	-

MONTICELLO Nuclear Generating Plant
3rd Interval ISI Plan Rev. 3 June 1, 1992 to May 31, 2002

Category, ItemNO, Class	Summary / CompID / System	Scope / Method / Procedure	Iso No. Comp. Desc. Code Case /Note		Period 1				Period 2				Period 3			
					1	2	3	4	1	2	3	4	1	2	3	4
B-G-2	102503		ISI Fig 2	ISI	-	-	-	-	-	-	-	-	-	-	-	-
B7.80	26-43B		CRD Housing Bolts	AUG	-	-	-	-	-	-	-	-	-	-	-	-
1	CRD Housings			OWN	-	-	-	-	-	-	-	-	-	-	-	-
				PRE	-	-	-	-	-	-	-	-	-	-	-	-
B-G-2	102504		ISI Fig 2	ISI	-	-	-	-	-	-	-	-	-	-	-	-
B7.80	26-47B		CRD Housing Bolts	AUG	-	-	-	-	-	-	-	-	-	-	-	-
1	CRD Housings			OWN	-	-	-	-	-	-	-	-	-	-	-	-
				PRE	-	-	-	-	-	-	-	-	-	-	-	-
B-O	102505		ISI Fig 2	ISI	-	-	-	-	-	-	-	-	-	-	-	-
B14.10	26-51 (Lower)		CRD Housing Weld	AUG	-	-	-	-	-	-	-	-	-	-	-	-
1	CRD Housings			OWN	-	-	-	-	-	-	-	-	-	-	-	-
				PRE	-	-	-	-	-	-	-	-	-	-	-	-
B-O	102506		ISI Fig 2	ISI	-	-	-	-	-	-	-	-	-	-	-	-
B14.10	26-51 (Upper)		CRD Housing Weld	AUG	-	-	-	-	-	-	-	-	-	-	-	-
1	CRD Housings			OWN	-	-	-	-	-	-	-	-	-	-	-	-
				PRE	-	-	-	-	-	-	-	-	-	-	-	-
B-G-2	102507		ISI Fig 2	ISI	-	-	-	-	-	-	-	-	-	-	-	-
B7.80	26-51B		CRD Housing Bolts	AUG	-	-	-	-	-	-	-	-	-	-	-	-
1	CRD Housings			OWN	-	-	-	-	-	-	-	-	-	-	-	-
				PRE	-	-	-	-	-	-	-	-	-	-	-	-
B-O	102508		ISI Fig 2	ISI	-	-	-	-	-	-	-	-	-	-	-	-
B14.10	30-03 (Lower)		CRD Housing Weld	AUG	-	-	-	-	-	-	-	-	-	-	-	-
1	CRD Housings			OWN	-	-	-	-	-	-	-	-	-	-	-	-
				PRE	-	-	-	-	-	-	-	-	-	-	-	-
B-O	102509		ISI Fig 2	ISI	-	-	-	-	-	-	-	-	-	-	-	-
B14.10	30-03 (Upper)		CRD Housing Weld	AUG	-	-	-	-	-	-	-	-	-	-	-	-
1	CRD Housings			OWN	-	-	-	-	-	-	-	-	-	-	-	-
				PRE	-	-	-	-	-	-	-	-	-	-	-	-
B-G-2	102510		ISI Fig 2	ISI	-	-	-	-	-	-	-	-	-	-	-	-
B7.80	30-03B		CRD Housing Bolts	AUG	-	-	-	-	-	-	-	-	-	-	-	-
1	CRD Housings			OWN	-	-	-	-	-	-	-	-	-	-	-	-
				PRE	-	-	-	-	-	-	-	-	-	-	-	-
B-O	102511		ISI Fig 2	ISI	-	-	-	-	-	-	-	-	-	-	-	-
B14.10	30-07 (Lower)		CRD Housing Weld	AUG	-	-	-	-	-	-	-	-	-	-	-	-
1	CRD Housings			OWN	-	-	-	-	-	-	-	-	-	-	-	-
				PRE	-	-	-	-	-	-	-	-	-	-	-	-
B-O	102512		ISI Fig 2	ISI	-	-	-	-	-	-	-	-	-	-	-	-
B14.10	30-07 (Upper)		CRD Housing Weld	AUG	-	-	-	-	-	-	-	-	-	-	-	-
1	CRD Housings			OWN	-	-	-	-	-	-	-	-	-	-	-	-
				PRE	-	-	-	-	-	-	-	-	-	-	-	-

MONTICELLO Nuclear Generating Plant
3rd Interval ISI Plan Rev. 3 June 1, 1992 to May 31, 2002

Category, ItemNO, Class	Summary / CompID / System	Scope / Method / Procedure	Iso No. Comp. Desc. Code Case /Note		Period 1				Period 2				Period 3			
					1	2	3	4	1	2	3	4	1	2	3	4
B-G-2	102533		ISI Fig 2	ISI	-	-	-	-	-	-	-	-	-	-	-	-
B7.80	34-19B		CRD Housing Bolts	AUG	-	-	-	-	-	-	-	-	-	-	-	-
1	CRD Housings			OWN	-	-	-	-	-	-	-	-	-	-	-	-
				PRE	-	-	-	-	-	-	-	-	-	-	-	-
B-G-2	102534		ISI Fig 2	ISI	-	-	-	-	-	-	-	-	-	-	-	-
B7.80	34-23B		CRD Housing Bolts	AUG	-	-	-	-	-	-	-	-	-	-	-	-
1	CRD Housings			OWN	-	-	-	-	-	-	-	-	-	-	-	-
				PRE	-	-	-	-	-	-	-	-	-	-	-	-
B-G-2	102535	ISI/VT/ISI-VT-1.0	ISI Fig 2	ISI	-	c	-	-	-	-	-	-	b	-	-	-
B7.80	34-27B		CRD Housing Bolts	AUG	-	-	-	-	-	-	-	-	-	-	-	-
1	CRD Housings			OWN	-	-	-	-	-	-	-	-	-	-	-	-
				PRE	-	-	-	-	-	-	-	-	-	-	-	-
B-G-2	102536	ISI/VT/ISI-VT-1.0	ISI Fig 2	ISI	-	-	-	-	-	-	-	-	s	-	-	-
B7.80	34-31B		CRD Housing Bolts	AUG	-	-	-	-	-	-	-	-	-	-	-	-
1	CRD Housings			OWN	-	-	-	-	-	-	-	-	-	-	-	-
				PRE	-	-	-	-	-	-	-	-	-	-	-	-
B-G-2	102537	ISI/VT/ISI-VT-1.0	ISI Fig 2	ISI	-	-	-	-	-	-	-	-	s	-	-	-
B7.80	34-35B		CRD Housing Bolts	AUG	-	-	-	-	-	-	-	-	-	-	-	-
1	CRD Housings			OWN	-	-	-	-	-	-	-	-	-	-	-	-
				PRE	-	-	-	-	-	-	-	-	-	-	-	-
B-G-2	102538		ISI Fig 2	ISI	-	-	-	-	-	-	-	-	-	-	-	-
B7.80	34-39B		CRD Housing Bolts	AUG	-	-	-	-	-	-	-	-	-	-	-	-
1	CRD Housings			OWN	-	-	-	-	-	-	-	-	-	-	-	-
				PRE	-	-	-	-	-	-	-	-	-	-	-	-
B-G-2	102541		ISI Fig 2	ISI	-	-	-	-	-	-	-	-	-	-	-	-
B7.80	34-43B		CRD Housing Bolts	AUG	-	-	-	-	-	-	-	-	-	-	-	-
1	CRD Housings			OWN	-	-	-	-	-	-	-	-	-	-	-	-
				PRE	-	-	-	-	-	-	-	-	-	-	-	-
B-O	102542		ISI Fig 2	ISI	-	-	-	-	-	-	-	-	-	-	-	-
B14.10	34-47 (Lower)		CRD Housing Weld	AUG	-	-	-	-	-	-	-	-	-	-	-	-
1	CRD Housings			OWN	-	-	-	-	-	-	-	-	-	-	-	-
				PRE	-	-	-	-	-	-	-	-	-	-	-	-
B-O	102543		ISI Fig 2	ISI	-	-	-	-	-	-	-	-	-	-	-	-
B14.10	34-47 (Upper)		CRD Housing Weld	AUG	-	-	-	-	-	-	-	-	-	-	-	-
1	CRD Housings			OWN	-	-	-	-	-	-	-	-	-	-	-	-
				PRE	-	-	-	-	-	-	-	-	-	-	-	-
B-G-2	102544		ISI Fig 2	ISI	-	-	-	-	-	-	-	-	-	-	-	-
B7.80	34-47B		CRD Housing Bolts	AUG	-	-	-	-	-	-	-	-	-	-	-	-
1	CRD Housings			OWN	-	-	-	-	-	-	-	-	-	-	-	-
				PRE	-	-	-	-	-	-	-	-	-	-	-	-

MONTICELLO Nuclear Generating Plant
3rd Interval ISI Plan Rev. 3 June 1, 1992 to May 31, 2002

Category, ItemNO, Class	Summary / CompID / System	Scope / Method / Procedure	Iso No. Comp. Desc. Code Case /Note		Period 1				Period 2				Period 3			
					1	2	3	4	1	2	3	4	1	2	3	4
B-O	102523		ISI Fig 2	ISI	-	-	-	-	-	-	-	-	-	-	-	-
B14.10	30-47 (Upper)		CRD Housing Weld	AUG	-	-	-	-	-	-	-	-	-	-	-	-
1	CRD Housings			OWN	-	-	-	-	-	-	-	-	-	-	-	-
				PRE	-	-	-	-	-	-	-	-	-	-	-	-
B-G-2	102524		ISI Fig 2	ISI	-	-	-	-	-	-	-	-	-	-	-	-
B7.80	30-47B		CRD Housing Bolts	AUG	-	-	-	-	-	-	-	-	-	-	-	-
1	CRD Housings			OWN	-	-	-	-	-	-	-	-	-	-	-	-
				PRE	-	-	-	-	-	-	-	-	-	-	-	-
B-O	102525		ISI Fig 2	ISI	-	-	-	-	-	-	-	-	-	-	-	-
B14.10	30-51 (Lower)		CRD Housing Weld	AUG	-	-	-	-	-	-	-	-	-	-	-	-
1	CRD Housings			OWN	-	-	-	-	-	-	-	-	-	-	-	-
				PRE	-	-	-	-	-	-	-	-	-	-	-	-
B-O	102526		ISI Fig 2	ISI	-	-	-	-	-	-	-	-	-	-	-	-
B14.10	30-51 (Upper)		CRD Housing Weld	AUG	-	-	-	-	-	-	-	-	-	-	-	-
1	CRD Housings			OWN	-	-	-	-	-	-	-	-	-	-	-	-
				PRE	-	-	-	-	-	-	-	-	-	-	-	-
B-G-2	102527		ISI Fig 2	ISI	-	-	-	-	-	-	-	-	-	-	-	-
B7.80	30-51B		CRD Housing Bolts	AUG	-	-	-	-	-	-	-	-	-	-	-	-
1	CRD Housings			OWN	-	-	-	-	-	-	-	-	-	-	-	-
				PRE	-	-	-	-	-	-	-	-	-	-	-	-
B-O	102528		ISI Fig 2	ISI	-	-	-	-	-	-	-	-	-	-	-	-
B14.10	34-07 (Lower)		CRD Housing Weld	AUG	-	-	-	-	-	-	-	-	-	-	-	-
1	CRD Housings			OWN	-	-	-	-	-	-	-	-	-	-	-	-
				PRE	-	-	-	-	-	-	-	-	-	-	-	-
B-O	102529		ISI Fig 2	ISI	-	-	-	-	-	-	-	-	-	-	-	-
B14.10	34-07 (Upper)		CRD Housing Weld	AUG	-	-	-	-	-	-	-	-	-	-	-	-
1	CRD Housings			OWN	-	-	-	-	-	-	-	-	-	-	-	-
				PRE	-	-	-	-	-	-	-	-	-	-	-	-
B-G-2	102530		ISI Fig 2	ISI	-	-	-	-	-	-	-	-	-	-	-	-
B7.80	34-07B		CRD Housing Bolts	AUG	-	-	-	-	-	-	-	-	-	-	-	-
1	CRD Housings			OWN	-	-	-	-	-	-	-	-	-	-	-	-
				PRE	-	-	-	-	-	-	-	-	-	-	-	-
B-G-2	102531		ISI Fig 2	ISI	-	-	-	-	-	-	-	-	-	-	-	-
B7.80	34-11B		CRD Housing Bolts	AUG	-	-	-	-	-	-	-	-	-	-	-	-
1	CRD Housings			OWN	-	-	-	-	-	-	-	-	-	-	-	-
				PRE	-	-	-	-	-	-	-	-	-	-	-	-
B-G-2	102532		ISI Fig 2	ISI	-	-	-	-	-	-	-	-	-	-	-	-
B7.80	34-15B		CRD Housing Bolts	AUG	-	-	-	-	-	-	-	-	-	-	-	-
1	CRD Housings			OWN	-	-	-	-	-	-	-	-	-	-	-	-
				PRE	-	-	-	-	-	-	-	-	-	-	-	-

MONTICELLO Nuclear Generating Plant
3rd Interval ISI Plan Rev. 3 June 1, 1992 to May 31, 2002

Category, ItemNO, Class	Summary / CompID / System	Scope / Method / Procedure	Iso No. Comp. Desc. Code Case /Note		Period 1				Period 2				Period 3			
					1	2	3	4	1	2	3	4	1	2	3	4
B-G-2	102555		ISI Fig 2	ISI	-	-	-	-	-	-	-	-	-	-	-	-
B7.80	38-31B		CRD Housing Bolts	AUG	-	-	-	-	-	-	-	-	-	-	-	-
1	CRD Housings			OWN	-	-	-	-	-	-	-	-	-	-	-	-
				PRE	-	-	-	-	-	-	-	-	-	-	-	-
B-G-2	102556		ISI Fig 2	ISI	-	-	-	-	-	-	-	-	-	-	-	-
B7.80	38-35B		CRD Housing Bolts	AUG	-	-	-	-	-	-	-	-	-	-	-	-
1	CRD Housings			OWN	-	-	-	-	-	-	-	-	-	-	-	-
				PRE	-	-	-	-	-	-	-	-	-	-	-	-
B-G-2	102557		ISI Fig 2	ISI	-	-	-	-	-	-	-	-	-	-	-	-
B7.80	38-39B		CRD Housing Bolts	AUG	-	-	-	-	-	-	-	-	-	-	-	-
1	CRD Housings			OWN	-	-	-	-	-	-	-	-	-	-	-	-
				PRE	-	-	-	-	-	-	-	-	-	-	-	-
B-O	102558		ISI Fig 2	ISI	-	-	-	-	-	-	-	-	-	-	-	-
B14.10	38-43 (Lower)		CRD Housing Weld	AUG	-	-	-	-	-	-	-	-	-	-	-	-
1	CRD Housings			OWN	-	-	-	-	-	-	-	-	-	-	-	-
				PRE	-	-	-	-	-	-	-	-	-	-	-	-
B-O	102559		ISI Fig 2	ISI	-	-	-	-	-	-	-	-	-	-	-	-
B14.10	38-43 (Upper)		CRD Housing Weld	AUG	-	-	-	-	-	-	-	-	-	-	-	-
1	CRD Housings			OWN	-	-	-	-	-	-	-	-	-	-	-	-
				PRE	-	-	-	-	-	-	-	-	-	-	-	-
B-O	102561		ISI Fig 2	ISI	-	-	-	-	-	-	-	-	-	-	-	-
B14.10	38-47 (Lower)		CRD Housing Weld	AUG	-	-	-	-	-	-	-	-	-	-	-	-
1	CRD Housings			OWN	-	-	-	-	-	-	-	-	-	-	-	-
				PRE	-	-	-	-	-	-	-	-	-	-	-	-
B-O	102562		ISI Fig 2	ISI	-	-	-	-	-	-	-	-	-	-	-	-
B14.10	38-47 (Upper)		CRD Housing Weld	AUG	-	-	-	-	-	-	-	-	-	-	-	-
1	CRD Housings			OWN	-	-	-	-	-	-	-	-	-	-	-	-
				PRE	-	-	-	-	-	-	-	-	-	-	-	-
B-G-2	102563		ISI Fig 2	ISI	-	-	-	-	-	-	-	-	-	-	-	-
B7.80	38-47B		CRD Housing Bolts	AUG	-	-	-	-	-	-	-	-	-	-	-	-
1	CRD Housings			OWN	-	-	-	-	-	-	-	-	-	-	-	-
				PRE	-	-	-	-	-	-	-	-	-	-	-	-
B-O	102564		ISI Fig 2	ISI	-	-	-	-	-	-	-	-	-	-	-	-
B14.10	42-11 (Lower)		CRD Housing Weld	AUG	-	-	-	-	-	-	-	-	-	-	-	-
1	CRD Housings			OWN	-	-	-	-	-	-	-	-	-	-	-	-
				PRE	-	-	-	-	-	-	-	-	-	-	-	-
B-O	102565		ISI Fig 2	ISI	-	-	-	-	-	-	-	-	-	-	-	-
B14.10	42-11 (Upper)		CRD Housing Weld	AUG	-	-	-	-	-	-	-	-	-	-	-	-
1	CRD Housings			OWN	-	-	-	-	-	-	-	-	-	-	-	-
				PRE	-	-	-	-	-	-	-	-	-	-	-	-

MONTICELLO Nuclear Generating Plant
3rd Interval ISI Plan Rev. 3 June 1, 1992 to May 31, 2002

Category, ItemNO, Class	Summary / CompID / System	Scope / Method / Procedure	Iso No. Comp. Desc. Code Case /Note		Period 1				Period 2				Period 3			
					1	2	3	4	1	2	3	4	1	2	3	4
B-O	102545		ISI Fig 2	ISI	-	-	-	-	-	-	-	-	-	-	-	-
B14.10	38-07 (Lower)		CRD Housing Weld	AUG	-	-	-	-	-	-	-	-	-	-	-	-
1	CRD Housings			OWN	-	-	-	-	-	-	-	-	-	-	-	-
				PRE	-	-	-	-	-	-	-	-	-	-	-	-
B-O	102546		ISI Fig 2	ISI	-	-	-	-	-	-	-	-	-	-	-	-
B14.10	38-07 (Upper)		CRD Housing Weld	AUG	-	-	-	-	-	-	-	-	-	-	-	-
1	CRD Housings			OWN	-	-	-	-	-	-	-	-	-	-	-	-
				PRE	-	-	-	-	-	-	-	-	-	-	-	-
B-G-2	102547		ISI Fig 2	ISI	-	-	-	-	-	-	-	-	-	-	-	-
B7.80	38-07B		CRD Housing Bolts	AUG	-	-	-	-	-	-	-	-	-	-	-	-
1	CRD Housings			OWN	-	-	-	-	-	-	-	-	-	-	-	-
				PRE	-	-	-	-	-	-	-	-	-	-	-	-
B-O	102548		ISI Fig 2	ISI	-	-	-	-	-	-	-	-	-	-	-	-
B14.10	38-11 (Lower)		CRD Housing Weld	AUG	-	-	-	-	-	-	-	-	-	-	-	-
1	CRD Housings			OWN	-	-	-	-	-	-	-	-	-	-	-	-
				PRE	-	-	-	-	-	-	-	-	-	-	-	-
B-O	102549		ISI Fig 2	ISI	-	-	-	-	-	-	-	-	-	-	-	-
B14.10	38-11 (Upper)		CRD Housing Weld	AUG	-	-	-	-	-	-	-	-	-	-	-	-
1	CRD Housings			OWN	-	-	-	-	-	-	-	-	-	-	-	-
				PRE	-	-	-	-	-	-	-	-	-	-	-	-
B-G-2	102550		ISI Fig 2	ISI	-	-	-	-	-	-	-	-	-	-	-	-
B7.80	38-11B		CRD Housing Bolts	AUG	-	-	-	-	-	-	-	-	-	-	-	-
1	CRD Housings			OWN	-	-	-	-	-	-	-	-	-	-	-	-
				PRE	-	-	-	-	-	-	-	-	-	-	-	-
B-G-2	102551		ISI Fig 2	ISI	-	-	-	-	-	-	-	-	-	-	-	-
B7.80	38-15B		CRD Housing Bolts	AUG	-	-	-	-	-	-	-	-	-	-	-	-
1	CRD Housings			OWN	-	-	-	-	-	-	-	-	-	-	-	-
				PRE	-	-	-	-	-	-	-	-	-	-	-	-
B-G-2	102552		ISI Fig 2	ISI	-	-	-	-	-	-	-	-	-	-	-	-
B7.80	38-19B		CRD Housing Bolts	AUG	-	-	-	-	-	-	-	-	-	-	-	-
1	CRD Housings			OWN	-	-	-	-	-	-	-	-	-	-	-	-
				PRE	-	-	-	-	-	-	-	-	-	-	-	-
B-G-2	102553		ISI Fig 2	ISI	-	-	-	-	-	-	-	-	-	-	-	-
B7.80	38-23B		CRD Housing Bolts	AUG	-	-	-	-	-	-	-	-	-	-	-	-
1	CRD Housings			OWN	-	-	-	-	-	-	-	-	-	-	-	-
				PRE	-	-	-	-	-	-	-	-	-	-	-	-
B-G-2	102554		ISI-Fig. 2	ISI	-	-	-	-	-	-	-	-	-	-	-	-
B7.80	38-27B		CRD Housing Bolts	AUG	-	-	-	-	-	-	-	-	-	-	-	-
1	CRD Housings			OWN	-	-	-	-	-	-	-	-	-	-	-	-
				PRE	-	-	-	-	-	-	-	-	-	-	-	-

MONTICELLO Nuclear Generating Plant
3rd Interval ISI Plan Rev. 3 June 1, 1992 to May 31, 2002

Category, ItemNO, Class	Summary / CompID / System	Scope / Method / Procedure	Iso No. Comp. Desc. Code Case /Note		Period 1				Period 2				Period 3			
					1	2	3	4	1	2	3	4	1	2	3	4
B-O	102576		ISI Fig 2	ISI	-	-	-	-	-	-	-	-	-	-	-	-
B14.10	42-39 (Upper)		CRD Housing Weld	AUG	-	-	-	-	-	-	-	-	-	-	-	-
1	CRD Housings			OWN	-	-	-	-	-	-	-	-	-	-	-	-
				PRE	-	-	-	-	-	-	-	-	-	-	-	-
B-G-2	102577		ISI Fig 2	ISI	-	-	-	-	-	-	-	-	-	-	-	-
B7.80	42-39B		CRD Housing Bolts	AUG	-	-	-	-	-	-	-	-	-	-	-	-
1	CRD Housings			OWN	-	-	-	-	-	-	-	-	-	-	-	-
				PRE	-	-	-	-	-	-	-	-	-	-	-	-
B-O	102578		ISI Fig 2	ISI	-	-	-	-	-	-	-	-	-	-	-	-
B14.10	42-43 (Lower)		CRD Housing Weld	AUG	-	-	-	-	-	-	-	-	-	-	-	-
1	CRD Housings			OWN	-	-	-	-	-	-	-	-	-	-	-	-
				PRE	-	-	-	-	-	-	-	-	-	-	-	-
B-O	102579		ISI Fig 2	ISI	-	-	-	-	-	-	-	-	-	-	-	-
B14.10	42-43 (Upper)		CRD Housing Weld	AUG	-	-	-	-	-	-	-	-	-	-	-	-
1	CRD Housings			OWN	-	-	-	-	-	-	-	-	-	-	-	-
				PRE	-	-	-	-	-	-	-	-	-	-	-	-
B-G-2	102580		ISI Fig 2	ISI	-	-	-	-	-	-	-	-	-	-	-	-
B7.80	42-43B		CRD Housing Bolts	AUG	-	-	-	-	-	-	-	-	-	-	-	-
1	CRD Housings			OWN	-	-	-	-	-	-	-	-	-	-	-	-
				PRE	-	-	-	-	-	-	-	-	-	-	-	-
B-O	102581		ISI Fig 2	ISI	-	-	-	-	-	-	-	-	-	-	-	-
B14.10	46-15 (Lower)		CRD Housing Weld	AUG	-	-	-	-	-	-	-	-	-	-	-	-
1	CRD Housings			OWN	-	-	-	-	-	-	-	-	-	-	-	-
				PRE	-	-	-	-	-	-	-	-	-	-	-	-
B-O	102582		ISI Fig 2	ISI	-	-	-	-	-	-	-	-	-	-	-	-
B14.10	46-15 (Upper)		CRD Housing Weld	AUG	-	-	-	-	-	-	-	-	-	-	-	-
1	CRD Housings			OWN	-	-	-	-	-	-	-	-	-	-	-	-
				PRE	-	-	-	-	-	-	-	-	-	-	-	-
B-G-2	102583		ISI Fig 2	ISI	-	-	-	-	-	-	-	-	-	-	-	-
B7.80	46-15B		CRD Housing Bolts	AUG	-	-	-	-	-	-	-	-	-	-	-	-
1	CRD Housings			OWN	-	-	-	-	-	-	-	-	-	-	-	-
				PRE	-	-	-	-	-	-	-	-	-	-	-	-
B-O	102584		ISI Fig 2	ISI	-	-	-	-	-	-	-	-	-	-	-	-
B14.10	46-19 (Lower)		CRD Housing Weld	AUG	-	-	-	-	-	-	-	-	-	-	-	-
1	CRD Housings			OWN	-	-	-	-	-	-	-	-	-	-	-	-
				PRE	-	-	-	-	-	-	-	-	-	-	-	-
B-O	102585		ISI Fig 2	ISI	-	-	-	-	-	-	-	-	-	-	-	-
B14.10	46-19 (Upper)		CRD Housing Weld	AUG	-	-	-	-	-	-	-	-	-	-	-	-
1	CRD Housings			OWN	-	-	-	-	-	-	-	-	-	-	-	-
				PRE	-	-	-	-	-	-	-	-	-	-	-	-

MONTICELLO Nuclear Generating Plant
3rd Interval ISI Plan Rev. 3 June 1, 1992 to May 31, 2002

Category, ItemNO, Class	Summary / CompID / System	Scope / Method / Procedure	Iso No. Comp. Desc. Code Case /Note		Period 1				Period 2				Period 3			
					1	2	3	4	1	2	3	4	1	2	3	4
B-G-2	102566		ISI Fig 2	ISI	-	-	-	-	-	-	-	-	-	-	-	-
B7.80	42-11B		CRD Housing Bolts	AUG	-	-	-	-	-	-	-	-	-	-	-	-
1	CRD Housings			OWN	-	-	-	-	-	-	-	-	-	-	-	-
				PRE	-	-	-	-	-	-	-	-	-	-	-	-
B-O	102567		ISI Fig 2	ISI	-	-	-	-	-	-	-	-	-	-	-	-
B14.10	42-15 (Lower)		CRD Housing Weld	AUG	-	-	-	-	-	-	-	-	-	-	-	-
1	CRD Housings			OWN	-	-	-	-	-	-	-	-	-	-	-	-
				PRE	-	-	-	-	-	-	-	-	-	-	-	-
B-O	102568		ISI Fig 2	ISI	-	-	-	-	-	-	-	-	-	-	-	-
B14.10	42-15 (Upper)		CRD Housing Weld	AUG	-	-	-	-	-	-	-	-	-	-	-	-
1	CRD Housings			OWN	-	-	-	-	-	-	-	-	-	-	-	-
				PRE	-	-	-	-	-	-	-	-	-	-	-	-
B-G-2	102569	ISI/VT/ISI-VT-1.0	ISI Fig 2	ISI	-	c	-	-	-	-	-	-	-	-	-	-
B7.80	42-15B		CRD Housing Bolts	AUG	-	-	-	-	-	-	-	-	-	-	-	-
1	CRD Housings			OWN	-	-	-	-	-	-	-	-	-	-	-	-
				PRE	-	-	-	-	-	-	-	-	-	-	-	-
B-G-2	102570		ISI Fig 2	ISI	-	-	-	-	-	-	-	-	-	-	-	-
B7.80	42-19B		CRD Housing Bolts	AUG	-	-	-	-	-	-	-	-	-	-	-	-
1	CRD Housings			OWN	-	-	-	-	-	-	-	-	-	-	-	-
				PRE	-	-	-	-	-	-	-	-	-	-	-	-
B-G-2	102571		ISI Fig 2	ISI	-	-	-	-	-	-	-	-	-	-	-	-
B7.80	42-23B		CRD Housing Bolts	AUG	-	-	-	-	-	-	-	-	-	-	-	-
1	CRD Housings			OWN	-	-	-	-	-	-	-	-	-	-	-	-
				PRE	-	-	-	-	-	-	-	-	-	-	-	-
B-G-2	102572		ISI Fig 2	ISI	-	-	-	-	-	-	-	-	-	-	-	-
B7.80	42-27B		CRD Housing Bolts	AUG	-	-	-	-	-	-	-	-	-	-	-	-
1	CRD Housings			OWN	-	-	-	-	-	-	-	-	-	-	-	-
				PRE	-	-	-	-	-	-	-	-	-	-	-	-
B-G-2	102573		ISI Fig 2	ISI	-	-	-	-	-	-	-	-	-	-	-	-
B7.80	42-31B		CRD Housing Bolts	AUG	-	-	-	-	-	-	-	-	-	-	-	-
1	CRD Housings			OWN	-	-	-	-	-	-	-	-	-	-	-	-
				PRE	-	-	-	-	-	-	-	-	-	-	-	-
B-G-2	102574		ISI Fig 2	ISI	-	-	-	-	-	-	-	-	-	-	-	-
B7.80	42-35B		CRD Housing Bolts	AUG	-	-	-	-	-	-	-	-	-	-	-	-
1	CRD Housings			OWN	-	-	-	-	-	-	-	-	-	-	-	-
				PRE	-	-	-	-	-	-	-	-	-	-	-	-
B-O	102575		ISI Fig 2	ISI	-	-	-	-	-	-	-	-	-	-	-	-
B14.10	42-39 (Lower)		CRD Housing Weld	AUG	-	-	-	-	-	-	-	-	-	-	-	-
1	CRD Housings			OWN	-	-	-	-	-	-	-	-	-	-	-	-
				PRE	-	-	-	-	-	-	-	-	-	-	-	-

MONTICELLO Nuclear Generating Plant
3rd Interval ISI Plan Rev. 3 June 1, 1992 to May 31, 2002

Category, ItemNO, Class	Summary / CompID / System	Scope / Method / Procedure	Iso No. Comp. Desc. Code Case /Note		Period 1				Period 2				Period 3			
					1	2	3	4	1	2	3	4	1	2	3	4
B-G-2	102596		ISI Fig 2	ISI	-	-	-	-	-	-	-	-	-	-	-	-
B7.80	46-35B		CRD Housing Bolts	AUG	-	-	-	-	-	-	-	-	-	-	-	-
1	CRD Housings			OWN	-	-	-	-	-	-	-	-	-	-	-	-
				PRE	-	-	-	-	-	-	-	-	-	-	-	-
B-O	102597		ISI Fig 2	ISI	-	-	-	-	-	-	-	-	-	-	-	-
B14.10	46-39 (Lower)		CRD Housing Weld	AUG	-	-	-	-	-	-	-	-	-	-	-	-
1	CRD Housings			OWN	-	-	-	-	-	-	-	-	-	-	-	-
				PRE	-	-	-	-	-	-	-	-	-	-	-	-
B-O	102598		ISI Fig 2	ISI	-	-	-	-	-	-	-	-	-	-	-	-
B14.10	46-39 (Upper)		CRD Housing Weld	AUG	-	-	-	-	-	-	-	-	-	-	-	-
1	CRD Housings			OWN	-	-	-	-	-	-	-	-	-	-	-	-
				PRE	-	-	-	-	-	-	-	-	-	-	-	-
B-G-2	102599		ISI Fig 2	ISI	-	-	-	-	-	-	-	-	-	-	-	-
B7.80	46-39B		CRD Housing Bolts	AUG	-	-	-	-	-	-	-	-	-	-	-	-
1	CRD Housings			OWN	-	-	-	-	-	-	-	-	-	-	-	-
				PRE	-	-	-	-	-	-	-	-	-	-	-	-
B-O	102600	ISI/PT/ISI-PT-1	ISI Fig 2	ISI	-	-	-	-	-	-	-	-	-	s	-	-
B14.10	50-23 (Lower)		CRD Housing Weld	AUG	-	-	-	-	-	-	-	-	-	-	-	-
1	CRD Housings			OWN	-	-	-	-	-	-	-	-	-	-	-	-
				PRE	-	-	-	-	-	-	-	-	-	-	-	-
B-O	102601	ISI/PT/ISI-PT-1	ISI Fig 2	ISI	-	-	-	-	-	-	-	-	-	s	-	-
B14.10	50-23 (Upper)		CRD Housing Weld	AUG	-	-	-	-	-	-	-	-	-	-	-	-
1	CRD Housings			OWN	-	-	-	-	-	-	-	-	-	-	-	-
				PRE	-	-	-	-	-	-	-	-	-	-	-	-
B-G-2	102602		ISI Fig 2	ISI	-	-	-	-	-	-	-	-	-	-	-	-
B7.80	50-23B		CRD Housing Bolts	AUG	-	-	-	-	-	-	-	-	-	-	-	-
1	CRD Housings			OWN	-	-	-	-	-	-	-	-	-	-	-	-
				PRE	-	-	-	-	-	-	-	-	-	-	-	-
B-O	102603		ISI Fig 2	ISI	-	-	-	-	-	-	-	-	-	-	-	-
B14.10	50-27 (Lower)		CRD Housing Weld	AUG	-	-	-	-	-	-	-	-	-	-	-	-
1	CRD Housings			OWN	-	-	-	-	-	-	-	-	-	-	-	-
				PRE	-	-	-	-	-	-	-	-	-	-	-	-
B-O	102604		ISI Fig 2	ISI	-	-	-	-	-	-	-	-	-	-	-	-
B14.10	50-27 (Upper)		CRD Housing Weld	AUG	-	-	-	-	-	-	-	-	-	-	-	-
1	CRD Housings			OWN	-	-	-	-	-	-	-	-	-	-	-	-
				PRE	-	-	-	-	-	-	-	-	-	-	-	-
B-G-2	102605		ISI Fig 2	ISI	-	-	-	-	-	-	-	-	-	-	-	-
B7.80	50-27B		CRD Housing Bolts	AUG	-	-	-	-	-	-	-	-	-	-	-	-
1	CRD Housings			OWN	-	-	-	-	-	-	-	-	-	-	-	-
				PRE	-	-	-	-	-	-	-	-	-	-	-	-

MONTICELLO Nuclear Generating Plant
3rd Interval ISI Plan Rev. 3 June 1, 1992 to May 31, 2002

Category, ItemNO, Class	Summary / CompID / System	Scope / Method / Procedure	Iso No. Comp. Desc. Code Case /Note		Period 1				Period 2				Period 3			
					1	2	3	4	1	2	3	4	1	2	3	4
B-G-2	102586		ISI Fig 2	ISI	-	-	-	-	-	-	-	-	-	-	-	-
B7.80	46-19B		CRD Housing Bolts	AUG	-	-	-	-	-	-	-	-	-	-	-	-
1	CRD Housings			OWN	-	-	-	-	-	-	-	-	-	-	-	-
				PRE	-	-	-	-	-	-	-	-	-	-	-	-
B-O	102587		ISI Fig 2	ISI	-	-	-	-	-	-	-	-	-	-	-	-
B14.10	46-23 (Lower)		CRD Housing Weld	AUG	-	-	-	-	-	-	-	-	-	-	-	-
1	CRD Housings			OWN	-	-	-	-	-	-	-	-	-	-	-	-
				PRE	-	-	-	-	-	-	-	-	-	-	-	-
B-O	102588		ISI Fig 2	ISI	-	-	-	-	-	-	-	-	-	-	-	-
B14.10	46-23 (Upper)		CRD Housing Weld	AUG	-	-	-	-	-	-	-	-	-	-	-	-
1	CRD Housings			OWN	-	-	-	-	-	-	-	-	-	-	-	-
				PRE	-	-	-	-	-	-	-	-	-	-	-	-
B-G-2	102589		ISI Fig 2	ISI	-	-	-	-	-	-	-	-	-	-	-	-
B7.80	46-23B		CRD Housing Bolts	AUG	-	-	-	-	-	-	-	-	-	-	-	-
1	CRD Housings			OWN	-	-	-	-	-	-	-	-	-	-	-	-
				PRE	-	-	-	-	-	-	-	-	-	-	-	-
B-G-2	102590		ISI Fig 2	ISI	-	-	-	-	-	-	-	-	-	-	-	-
B7.80	46-27B		CRD Housing Bolts	AUG	-	-	-	-	-	-	-	-	-	-	-	-
1	CRD Housings			OWN	-	-	-	-	-	-	-	-	-	-	-	-
				PRE	-	-	-	-	-	-	-	-	-	-	-	-
B-O	102591		ISI Fig 2	ISI	-	-	-	-	-	-	-	-	-	-	-	-
B14.10	46-31 (Lower)		CRD Housing Weld	AUG	-	-	-	-	-	-	-	-	-	-	-	-
1	CRD Housings			OWN	-	-	-	-	-	-	-	-	-	-	-	-
				PRE	-	-	-	-	-	-	-	-	-	-	-	-
B-O	102592		ISI Fig 2	ISI	-	-	-	-	-	-	-	-	-	-	-	-
B14.10	46-31 (Upper)		CRD Housing Weld	AUG	-	-	-	-	-	-	-	-	-	-	-	-
1	CRD Housings			OWN	-	-	-	-	-	-	-	-	-	-	-	-
				PRE	-	-	-	-	-	-	-	-	-	-	-	-
B-G-2	102593		ISI Fig 2	ISI	-	-	-	-	-	-	-	-	-	-	-	-
B7.80	46-31B		CRD Housing Bolts	AUG	-	-	-	-	-	-	-	-	-	-	-	-
1	CRD Housings			OWN	-	-	-	-	-	-	-	-	-	-	-	-
				PRE	-	-	-	-	-	-	-	-	-	-	-	-
B-O	102594		ISI Fig 2	ISI	-	-	-	-	-	-	-	-	-	-	-	-
B14.10	46-35 (Lower)		CRD Housing Weld	AUG	-	-	-	-	-	-	-	-	-	-	-	-
1	CRD Housings			OWN	-	-	-	-	-	-	-	-	-	-	-	-
				PRE	-	-	-	-	-	-	-	-	-	-	-	-
B-O	102595		ISI Fig 2	ISI	-	-	-	-	-	-	-	-	-	-	-	-
B14.10	46-35 (Upper)		CRD Housing Weld	AUG	-	-	-	-	-	-	-	-	-	-	-	-
1	CRD Housings			OWN	-	-	-	-	-	-	-	-	-	-	-	-
				PRE	-	-	-	-	-	-	-	-	-	-	-	-

MONTICELLO Nuclear Generating Plant
3rd Interval ISI Plan Rev. 3 June 1, 1992 to May 31, 2002

Category, ItemNO, Class	Summary / CompID / System	Scope / Method / Procedure	Iso No. Comp. Desc. Code Case /Note		Period 1				Period 2				Period 3			
					1	2	3	4	1	2	3	4	1	2	3	4
B-A	102629		ISI Fig 3	ISI	-	-	-	-	-	-	-	-	-	-	-	-
B1.22	W- 5		B.H. Meridional Weld	AUG	-	-	-	-	-	-	-	-	-	-	-	-
1	Reactor Vessel			OWN	-	-	-	-	-	-	-	-	-	-	-	-
				PRE	-	-	-	-	-	-	-	-	-	-	-	-
B-A	102630		ISI Fig 3	ISI	-	-	-	-	-	-	-	-	-	-	-	-
B1.22	W- 6		B.H. Meridional Weld	AUG	-	-	-	-	-	-	-	-	-	-	-	-
1	Reactor Vessel			OWN	-	-	-	-	-	-	-	-	-	-	-	-
				PRE	-	-	-	-	-	-	-	-	-	-	-	-
B-A	102631		ISI Fig 3	ISI	-	-	-	-	-	-	-	-	-	-	-	-
B1.22	W- 7		B.H. Meridional Weld	AUG	-	-	-	-	-	-	-	-	-	-	-	-
1	Reactor Vessel			OWN	-	-	-	-	-	-	-	-	-	-	-	-
				PRE	-	-	-	-	-	-	-	-	-	-	-	-
B-A	102632		ISI Fig 3	ISI	-	-	-	-	-	-	-	-	-	-	-	-
B1.22	W- 8		B.H. Meridional Weld	AUG	-	-	-	-	-	-	-	-	-	-	-	-
1	Reactor Vessel			OWN	-	-	-	-	-	-	-	-	-	-	-	-
				PRE	-	-	-	-	-	-	-	-	-	-	-	-
B-A	102633		ISI Fig 3	ISI	-	-	-	-	-	-	-	-	-	-	-	-
B1.22	W- 9		B.H. Meridional Weld	AUG	-	-	-	-	-	-	-	-	-	-	-	-
1	Reactor Vessel			OWN	-	-	-	-	-	-	-	-	-	-	-	-
				PRE	-	-	-	-	-	-	-	-	-	-	-	-
B-A	102634		ISI Fig 3	ISI	-	-	-	-	-	-	-	-	-	-	-	-
B1.22	W-10		B.H. Meridional Weld	AUG	-	-	-	-	-	-	-	-	-	-	-	-
1	Reactor Vessel			OWN	-	-	-	-	-	-	-	-	-	-	-	-
				PRE	-	-	-	-	-	-	-	-	-	-	-	-
B-A	102635		ISI Fig 3	ISI	-	-	-	-	-	-	-	-	-	-	-	-
B1.22	W-11		B.H. Meridional Weld	AUG	-	-	-	-	-	-	-	-	-	-	-	-
1	Reactor Vessel			OWN	-	-	-	-	-	-	-	-	-	-	-	-
				PRE	-	-	-	-	-	-	-	-	-	-	-	-
B-H	102636		ISI Fig 3	ISI	-	-	-	-	-	-	-	-	-	-	-	-
B8.10	W-12		B.H. to Skirt Weld	AUG	-	-	-	-	-	-	-	-	-	-	-	-
1	Reactor Vessel			OWN	-	-	-	-	-	-	-	-	-	-	-	-
				PRE	-	-	-	-	-	-	-	-	-	-	-	-
B-A	102637	ISI/UT/ISI-UT-3A	ISI Fig 4	ISI	-	-	-	-	-	-	-	-	-	s	-	-
B1.11	VCBA-2		Circ Weld	AUG	-	-	-	-	-	-	-	-	-	-	-	-
1	Reactor Vessel		NOTE:NN	OWN	-	-	-	-	-	-	-	-	-	-	-	-
				PRE	-	-	-	-	-	-	-	-	-	-	-	-
B-A	102638	ISI/UT/ISI-UT-3A	ISI Fig 4	ISI	c	-	-	-	-	-	-	-	-	b	-	-
B1.21	VCBB-1		B. Head/Vessel	AUG	-	-	-	-	-	-	-	-	-	-	-	-
1	Reactor Vessel		NOTE:BB	OWN	-	-	-	-	-	-	-	-	-	-	-	-
				PRE	-	-	-	-	-	-	-	-	-	-	-	-

MONTICELLO Nuclear Generating Plant
3rd Interval ISI Plan Rev. 3 June 1, 1992 to May 31, 2002

Category, ItemNO, Class	Summary / CompID / System	Scope / Method / Procedure	Iso No. Comp. Desc. Code Case /Note		Period 1				Period 2				Period 3			
					1	2	3	4	1	2	3	4	1	2	3	4
B-O	102606		ISI Fig 2	ISI	-	-	-	-	-	-	-	-	-	-	-	-
B14.10	50-31 (Lower)		CRD Housing Weld	AUG	-	-	-	-	-	-	-	-	-	-	-	-
1	CRD Housings			OWN	-	-	-	-	-	-	-	-	-	-	-	-
				PRE	-	-	-	-	-	-	-	-	-	-	-	-
B-O	102607		ISI Fig 2	ISI	-	-	-	-	-	-	-	-	-	-	-	-
B14.10	50-31 (Upper)		CRD Housing Weld	AUG	-	-	-	-	-	-	-	-	-	-	-	-
1	CRD Housings			OWN	-	-	-	-	-	-	-	-	-	-	-	-
				PRE	-	-	-	-	-	-	-	-	-	-	-	-
B-G-2	102608		ISI Fig 2	ISI	-	-	-	-	-	-	-	-	-	-	-	-
B7.80	50-31B		CRD Housing Bolts	AUG	-	-	-	-	-	-	-	-	-	-	-	-
1	CRD Housings			OWN	-	-	-	-	-	-	-	-	-	-	-	-
				PRE	-	-	-	-	-	-	-	-	-	-	-	-
B-D	102622	ISI/UT/ISI-UT-5	ISI Fig 3	ISI	-	-	-	-	-	-	-	-	s	-	-	-
B3.100	N-10 IR		N-10 Inner Radius	AUG	-	-	-	-	-	-	-	-	-	-	-	-
1	Reactor Vessel			OWN	-	-	-	-	-	-	-	-	-	-	-	-
				PRE	-	-	-	-	-	-	-	-	-	-	-	-
B-D	102623	ISI/UT/ISI-UT-3A	ISI Fig 3	ISI	-	-	-	-	-	-	-	-	s	-	-	-
B3.90	N-10 NV		N-10 Noz/Vsl Weld	AUG	-	-	-	-	-	-	-	-	-	-	-	-
1	Reactor Vessel			OWN	-	-	-	-	-	-	-	-	-	-	-	-
				PRE	-	-	-	-	-	-	-	-	-	-	-	-
B-E	102624	ISI/VT2/Note LL	ISI Fig 3	ISI	-	-	-	-	-	-	-	-	-	s	-	-
B4.11	N-15		N-15	AUG	-	-	-	-	-	-	-	-	-	-	-	-
1	Reactor Vessel		NOTE:LL	OWN	-	-	-	-	-	-	-	-	-	-	-	-
				PRE	-	-	-	-	-	-	-	-	-	-	-	-
B-A	102625	ISI/UT/ISI-UT-3A	ISI Fig 3	ISI	-	c	-	-	-	-	-	-	-	-	-	-
B1.22	W- 1		B.H. Dollar Pl L.S.	AUG	-	-	-	-	-	-	-	-	-	-	-	-
1	Reactor Vessel			OWN	-	-	-	-	-	-	-	-	-	-	-	-
				PRE	-	-	-	-	-	-	-	-	-	-	-	-
B-A	102626	ISI/UT/ISI-UT-3A	ISI Fig 3	ISI	-	-	-	-	-	-	-	-	s	-	-	-
B1.22	W- 2		B.H. Dollar Pl L.S.	AUG	-	-	-	-	-	-	-	-	-	-	-	-
1	Reactor Vessel			OWN	-	-	-	-	-	-	-	-	-	-	-	-
				PRE	-	-	-	-	-	-	-	-	-	-	-	-
B-A	102627	ISI/UT/ISI-UT-3A	ISI Fig 3	ISI	c	-	-	-	-	B	-	-	-	b	-	-
B1.21	W- 3		B.H. Circ Weld	AUG	-	-	-	-	-	-	-	-	-	-	-	-
1	Reactor Vessel			OWN	-	-	-	-	-	-	-	-	-	-	-	-
				PRE	-	-	-	-	-	-	-	-	-	-	-	-
B-A	102628		ISI Fig 3	ISI	-	-	-	-	-	-	-	-	-	-	-	-
B1.22	W- 4		B.H. Meridional Weld	AUG	-	-	-	-	-	-	-	-	-	-	-	-
1	Reactor Vessel			OWN	-	-	-	-	-	-	-	-	-	-	-	-
				PRE	-	-	-	-	-	-	-	-	-	-	-	-

MONTICELLO Nuclear Generating Plant
3rd Interval ISI Plan Rev. 3 June 1, 1992 to May 31, 2002

Category, ItemNO, Class	Summary / CompID / System	Scope / Method / Procedure	Iso No. Comp. Desc. Code Case /Note		Period 1				Period 2				Period 3			
					1	2	3	4	1	2	3	4	1	2	3	4
B-A	102649	ISI/UT/ISI-UT-3A	ISI Fig 4	ISI	-	-	-	-	-	-	-	-	-	s	-	-
B1.12	VLDB-2		Long Seam	AUG	-	-	-	-	-	-	-	-	-	-	-	-
1	Reactor Vessel		NOTE:NN	OWN	-	-	-	-	-	-	-	-	-	-	-	-
				PRE	-	-	-	-	-	-	-	-	-	-	-	-
B-H	102650		ISI Fig 4	ISI	-	-	-	-	-	-	-	-	-	-	-	-
B8.10	Vsl Stblzr Lugs		4 Stblz Lugs	AUG	-	-	-	-	-	-	-	-	-	-	-	-
1	Reactor Vessel		NOTE: RELIEF 2	OWN	-	-	-	-	-	-	-	-	-	-	-	-
				PRE	-	-	-	-	-	-	-	-	-	-	-	-
B-D	102651	ISI/UT/ISI-UT-5	ISI Fig 5	ISI	c	-	-	-	-	-	-	-	-	-	-	-
B3.100	N- 1A IR		N- 1A Inner Radius	AUG	-	-	-	-	-	-	-	-	-	-	-	-
1	Reactor Vessel			OWN	-	-	-	-	-	-	-	-	-	-	-	-
				PRE	-	-	-	-	-	-	-	-	-	-	-	-
B-D	102652	AUG/UT/ISI-UT-3A	ISI Fig 5	ISI	c	-	-	-	-	-	-	-	-	-	-	-
B3.90	N- 1A NV		N- 1A Vsl/Noz Weld	AUG	-	-	-	-	-	-	-	-	-	-	-	-
1	Reactor Vessel		NOTE:BB	OWN	-	-	-	-	-	-	-	-	-	-	-	-
				PRE	-	-	-	-	-	-	-	-	-	-	-	-
B-D	102653	ISI/UT/ISI-UT-5	ISI Fig 5	ISI	-	-	-	-	-	-	-	-	-	s	-	-
B3.100	N- 1B IR		N- 1B Inner Radius	AUG	-	-	-	-	-	-	-	-	-	-	-	-
1	Reactor Vessel			OWN	-	-	-	-	-	-	-	-	-	-	-	-
				PRE	-	-	-	-	-	-	-	-	-	-	-	-
B-D	102654	ISI/UT/ISI-UT-3A	ISI Fig 5	ISI	-	-	-	-	-	-	-	-	-	s	-	-
B3.90	N- 1B NV		N- 1B Vsl/Noz Weld	AUG	-	-	-	-	-	-	-	-	-	-	-	-
1	Reactor Vessel		NOTE:BB	OWN	-	-	-	-	-	-	-	-	-	-	-	-
				PRE	-	-	-	-	-	-	-	-	-	-	-	-
B-D	102655	ISI/UT/ISI-UT-5	ISI Fig 5	ISI	-	-	-	-	-	-	-	-	-	s	-	-
B3.100	N- 2A IR		N- 2A Inner Radius	AUG	-	-	-	-	-	-	-	-	-	-	-	-
1	Reactor Vessel			OWN	-	-	-	-	-	-	-	-	-	-	-	-
				PRE	-	-	-	-	-	-	-	-	-	-	-	-
B-D	102656	ISI/UT/ISI-UT-3A	ISI Fig 5	ISI	-	-	-	-	-	-	-	-	-	s	-	-
B3.90	N- 2A NV		N- 2A Noz/Vsl Weld	AUG	-	-	-	-	-	-	-	-	-	-	-	-
1	Reactor Vessel			OWN	-	-	-	-	-	-	-	-	-	-	-	-
				PRE	-	-	-	-	-	-	-	-	-	-	-	-
B-D	102657	ISI/UT/ISI-UT-5	ISI Fig 5	ISI	-	-	-	-	-	-	-	-	-	s	-	-
B3.100	N- 2B IR		N- 2B Inner Radius	AUG	-	-	-	-	-	-	-	-	-	-	-	-
1	Reactor Vessel			OWN	-	-	-	-	-	-	-	-	-	-	-	-
				PRE	-	-	-	-	-	-	-	-	-	-	-	-
B-D	102658	ISI/UT/ISI-UT-3A	ISI Fig 5	ISI	-	-	-	-	-	-	-	-	-	s	-	-
B3.90	N- 2B NV		N- 2B Noz / Vsl Weld	AUG	-	-	-	-	-	-	-	-	-	-	-	-
1	Reactor Vessel			OWN	-	-	-	-	-	-	-	-	-	-	-	-
				PRE	-	-	-	-	-	-	-	-	-	-	-	-

MONTICELLO Nuclear Generating Plant
3rd Interval ISI Plan Rev. 3 June 1, 1992 to May 31, 2002

Category, ItemNO, Class	Summary / CompID / System	Scope / Method / Procedure	Iso No. Comp. Desc. Code Case /Note		Period 1				Period 2				Period 3			
					1	2	3	4	1	2	3	4	1	2	3	4
B-A	102639	ISI/UT/ISI-UT-3A	ISI Fig 4	ISI	-	-	-	-	-	-	-	-	-	s	-	-
B1.11	VCBB-3		Circ Weld	AUG	-	-	-	-	-	-	-	-	-	-	-	-
1	Reactor Vessel		NOTE:NN	OWN	-	-	-	-	-	-	-	-	-	-	-	-
				PRE	-	-	-	-	-	-	-	-	-	-	-	-
B-A	102640	ISI/UT/ISI-UT-3A	ISI Fig 4	ISI	c	B	-	-	-	B	-	-	-	b	-	-
B1.11	VCBB-4		Circ Weld	AUG	-	-	-	-	-	-	-	-	-	-	-	-
1	Reactor Vessel		NOTE:NN , BB	OWN	-	-	-	-	-	-	-	-	-	-	-	-
				PRE	-	-	-	-	-	-	-	-	-	-	-	-
B-A	102641	ISI/UT/ISI-UT-8A	ISI Fig 4	ISI	c	-	-	-	-	-	-	-	-	b	-	-
B1.30	VCBC-5		Vessel/Flange Weld	AUG	-	-	-	-	-	-	-	-	-	-	-	-
1	Reactor Vessel			OWN	-	-	-	-	-	-	-	-	-	-	-	-
				PRE	-	-	-	-	-	-	-	-	-	-	-	-
B-A	102642	ISI/UT/ISI-UT-3A	ISI Fig 4	ISI	-	-	-	-	-	-	-	-	-	s	-	-
B1.12	VLAA-1		Long Seam	AUG	-	-	-	-	-	-	-	-	-	-	-	-
1	Reactor Vessel		NOTE:NN , BB	OWN	-	-	-	-	-	-	-	-	-	-	-	-
				PRE	-	-	-	-	-	-	-	-	-	-	-	-
B-A	102643	ISI/UT/ISI-UT-3A	ISI Fig 4	ISI	-	-	-	-	-	c	-	-	-	b	-	-
B1.12	VLAA-2		Long Seam	AUG	-	-	-	-	-	-	-	-	-	-	-	-
1	Reactor Vessel		NOTE:NN , BB	OWN	-	-	-	-	-	-	-	-	-	-	-	-
				PRE	-	-	-	-	-	-	-	-	-	-	-	-
B-A	102644	ISI/UT/ISI-UT-3A	ISI Fig 4	ISI	-	-	-	-	-	-	-	-	-	s	-	-
B1.12	VLBA-1		Long Seam	AUG	-	-	-	-	-	-	-	-	-	-	-	-
1	Reactor Vessel		NOTE:NN	OWN	-	-	-	-	-	-	-	-	-	-	-	-
				PRE	-	-	-	-	-	-	-	-	-	-	-	-
B-A	102645	ISI/UT/ISI-UT-3A	ISI Fig 4	ISI	-	-	-	-	-	-	-	-	-	s	-	-
B1.12	VLBA-2		Long Seam	AUG	-	-	-	-	-	-	-	-	-	-	-	-
1	Reactor Vessel		NOTE:NN	OWN	-	-	-	-	-	-	-	-	-	-	-	-
				PRE	-	-	-	-	-	-	-	-	-	-	-	-
B-A	102646	ISI/UT/ISI-UT-3A	ISI Fig 4	ISI	-	-	-	-	-	-	-	-	-	s	-	-
B1.12	VLCB-1		Long Seam	AUG	-	-	-	-	-	-	-	-	-	-	-	-
1	Reactor Vessel		NOTE:NN , BB	OWN	-	-	-	-	-	-	-	-	-	-	-	-
				PRE	-	-	-	-	-	-	-	-	-	-	-	-
B-A	102647	ISI/UT/ISI-UT-3A	ISI Fig 4	ISI	c	-	-	-	-	-	-	-	-	b	-	-
B1.12	VLCB-2		Long Seam	AUG	-	-	-	-	-	-	-	-	-	-	-	-
1	Reactor Vessel		NOTE:NN , BB	OWN	-	-	-	-	-	-	-	-	-	-	-	-
				PRE	-	-	-	-	-	-	-	-	-	-	-	-
B-A	102648	ISI/UT/ISI-UT-3A	ISI Fig 4	ISI	-	-	-	-	-	-	-	-	-	s	-	-
B1.12	VLDB-1		Long Seam	AUG	-	-	-	-	-	-	-	-	-	-	-	-
1	Reactor Vessel		NOTE:NN	OWN	-	-	-	-	-	-	-	-	-	-	-	-
				PRE	-	-	-	-	-	-	-	-	-	-	-	-

MONTICELLO Nuclear Generating Plant
3rd Interval ISI Plan Rev. 3 June 1, 1992 to May 31, 2002

Category, ItemNO, Class	Summary / CompID / System	Scope / Method / Procedure	Iso No. Comp. Desc. Code Case /Note		Period 1				Period 2				Period 3			
					1	2	3	4	1	2	3	4	1	2	3	4
B-D	102669	ISI/UT/ISI-UT-5	ISI Fig 5	ISI	-	-	-	-	-	c	-	-	-	-	-	-
B3.100	N- 2H IR		N- 2H Inner Radius	AUG	-	-	-	-	-	-	-	-	-	-	-	-
1	Reactor Vessel			OWN	-	-	-	-	-	-	-	-	-	-	-	-
				PRE	-	-	-	-	-	-	-	-	-	-	-	-
B-D	102670	ISI/UT/ISI-UT-3A	ISI Fig 5	ISI	-	-	-	-	-	c	-	-	-	-	-	-
B3.90	N- 2H NV		N- 2H Noz/Vsl Weld	AUG	-	-	-	-	-	-	-	-	-	-	-	-
1	Reactor Vessel			OWN	-	-	-	-	-	-	-	-	-	-	-	-
				PRE	-	-	-	-	-	-	-	-	-	-	-	-
B-D	102671	ISI/UT/ISI-UT-5	ISI Fig 5	ISI	c	-	-	-	-	-	-	-	-	-	-	-
B3.100	N- 2J IR		N- 2J Inner Radius	AUG	-	-	-	-	-	-	-	-	-	-	-	-
1	Reactor Vessel			OWN	-	-	-	-	-	-	-	-	-	-	-	-
				PRE	-	-	-	-	-	-	-	-	-	-	-	-
B-D	102672	ISI/RT/ISI-UT-3A	ISI Fig 5	ISI	c	-	-	-	-	-	-	-	-	-	-	-
B3.90	N- 2J NV		N- 2J Noz/Vsl Weld	AUG	-	-	-	-	-	-	-	-	-	-	-	-
1	Reactor Vessel			OWN	-	-	-	-	-	-	-	-	-	-	-	-
				PRE	-	-	-	-	-	-	-	-	-	-	-	-
B-D	102673	ISI/UT/ISI-UT-5	ISI Fig 5	ISI	-	-	-	-	-	-	-	-	-	s	-	-
B3.100	N- 2K IR		N- 2K Inner Radius	AUG	-	-	-	-	-	-	-	-	-	-	-	-
1	Reactor Vessel			OWN	-	-	-	-	-	-	-	-	-	-	-	-
				PRE	-	-	-	-	-	-	-	-	-	-	-	-
B-D	102674	ISI/UT/ISI-UT-3A	ISI Fig 5	ISI	-	-	-	-	-	-	-	-	-	s	-	-
B3.90	N- 2K NV		N- 2K Noz/Vsl Weld	AUG	-	-	-	-	-	-	-	-	-	-	-	-
1	Reactor Vessel			OWN	-	-	-	-	-	-	-	-	-	-	-	-
				PRE	-	-	-	-	-	-	-	-	-	-	-	-
B-D	102675	ISI/UT/ISI-UT-5	ISI Fig 5	ISI	c	-	-	-	-	-	-	-	-	-	-	-
B3.100	N- 3A IR		N- 3A Inner Radius	AUG	-	-	-	-	-	-	-	-	-	-	-	-
1	Reactor Vessel			OWN	-	-	-	-	-	-	-	-	-	-	-	-
				PRE	-	-	-	-	-	-	-	-	-	-	-	-
B-D	102676	ISI/UT/ISI-UT-3A	ISI Fig 5	ISI	c	-	-	-	-	-	-	-	-	-	-	-
B3.90	N- 3A NV		N- 3A Vsl/Noz Weld	AUG	-	-	-	-	-	-	-	-	-	-	-	-
1	Reactor Vessel			OWN	-	-	-	-	-	-	-	-	-	-	-	-
				PRE	-	-	-	-	-	-	-	-	-	-	-	-
B-D	102677	ISI/UT/ISI-UT-5	ISI Fig 5	ISI	-	-	-	-	-	-	-	-	s	-	-	-
B3.100	N- 3B IR		N- 3B Inner Radius	AUG	-	-	-	-	-	-	-	-	-	-	-	-
1	Reactor Vessel			OWN	-	-	-	-	-	-	-	-	-	-	-	-
				PRE	-	-	-	-	-	-	-	-	-	-	-	-
B-D	102678	ISI/UT/ISI-UT-3A	ISI Fig 5	ISI	-	-	-	-	-	-	-	-	s	-	-	-
B3.90	N- 3B NV		N- 3B Vsl/Noz Weld	AUG	-	-	-	-	-	-	-	-	-	-	-	-
1	Reactor Vessel			OWN	-	-	-	-	-	-	-	-	-	-	-	-
				PRE	-	-	-	-	-	-	-	-	-	-	-	-

MONTICELLO Nuclear Generating Plant
3rd Interval ISI Plan Rev. 3 June 1, 1992 to May 31, 2002

Category, ItemNO, Class	Summary / CompID / System	Scope / Method / Procedure	Iso No. Comp. Desc. Code Case /Note		Period 1				Period 2				Period 3			
					1	2	3	4	1	2	3	4	1	2	3	4
B-D	102659	ISI/UT/ISI-UT-5	ISI Fig 5	ISI	-	-	-	-	-	-	-	-	s	-	-	-
B3.100	N- 2C IR		N- 2C Inner Radius	AUG	-	-	-	-	-	-	-	-	-	-	-	-
1	Reactor Vessel			OWN	-	-	-	-	-	-	-	-	-	-	-	-
				PRE	-	-	-	-	-	-	-	-	-	-	-	-
B-D	102660	ISI/UT/ISI-UT-3A	ISI Fig 5	ISI	-	-	-	-	-	-	-	-	s	-	-	-
B3.90	N- 2C NV	AUG/MT/ISI-MT-1	N- 2C Noz/Vsl Weld	AUG	-	-	-	-	-	-	-	-	-	-	-	-
1	Reactor Vessel	AUG/UT/ISI-UT-10		OWN	-	-	-	-	-	-	-	-	-	-	-	-
		AUG/UT/ISI-UT-10		PRE	-	-	-	-	-	-	-	-	-	-	-	-
B-D	102661	ISI/UT/ISI-UT-5	ISI Fig 5	ISI	c	-	-	-	-	-	-	-	-	-	-	-
B3.100	N- 2D IR		N- 2D Inner Radius	AUG	-	-	-	-	-	-	-	-	-	-	-	-
1	Reactor Vessel			OWN	-	-	-	-	-	-	-	-	-	-	-	-
				PRE	-	-	-	-	-	-	-	-	-	-	-	-
B-D	102662	ISI/UT/ISI-UT-3A	ISI Fig 5	ISI	c	-	-	-	-	-	-	-	-	-	-	-
B3.90	N- 2D NV		N- 2D Noz/Vsl Weld	AUG	-	-	-	-	-	-	-	-	-	-	-	-
1	Reactor Vessel			OWN	-	-	-	-	-	-	-	-	-	-	-	-
				PRE	-	-	-	-	-	-	-	-	-	-	-	-
B-D	102663	ISI/UT/ISI-VT-5.0	ISI Fig 5	ISI	c	-	-	-	-	-	-	-	-	-	-	-
B3.100	N- 2E IR		N- 2E Inner Radius	AUG	-	-	-	-	-	-	-	-	-	-	-	-
1	Reactor Vessel			OWN	-	-	-	-	-	-	-	-	-	-	-	-
				PRE	-	-	-	-	-	-	-	-	-	-	-	-
B-D	102664	ISI/UT/ISI-UT-3A	ISI Fig 5	ISI	c	-	-	-	-	-	-	-	-	-	-	-
B3.90	N- 2E NV		N- 2E Noz/Vsl Weld	AUG	-	-	-	-	-	-	-	-	-	-	-	-
1	Reactor Vessel			OWN	-	-	-	-	-	-	-	-	-	-	-	-
				PRE	-	-	-	-	-	-	-	-	-	-	-	-
B-D	102665	ISI/UT/ISI-UT-5	ISI Fig 5	ISI	-	-	-	-	-	-	-	-	s	-	-	-
B3.100	N- 2F IR		N- 2F Inner Radius	AUG	-	-	-	-	-	-	-	-	-	-	-	-
1	Reactor Vessel			OWN	-	-	-	-	-	-	-	-	-	-	-	-
				PRE	-	-	-	-	-	-	-	-	-	-	-	-
B-D	102666	ISI/UT/ISI-UT-3A	ISI Fig 5	ISI	-	-	-	-	-	-	-	-	s	-	-	-
B3.90	N- 2F NV		N- 2F Noz/Vsl Weld	AUG	-	-	-	-	-	-	-	-	-	-	-	-
1	Reactor Vessel			OWN	-	-	-	-	-	-	-	-	-	-	-	-
				PRE	-	-	-	-	-	-	-	-	-	-	-	-
B-D	102667	ISI/UT/ISI-UT-5	ISI Fig 5	ISI	-	-	-	-	-	c	-	-	-	-	-	-
B3.100	N- 2G IR		N- 2G Inner Radius	AUG	-	-	-	-	-	-	-	-	-	-	-	-
1	Reactor Vessel			OWN	-	-	-	-	-	-	-	-	-	-	-	-
				PRE	-	-	-	-	-	-	-	-	-	-	-	-
B-D	102668	ISI/UT/ISI-UT-3A	ISI Fig 5	ISI	-	-	-	-	-	c	-	-	-	-	-	-
B3.90	N- 2G NV		N- 2G Noz/Vsl Weld	AUG	-	-	-	-	-	-	-	-	-	-	-	-
1	Reactor Vessel		NOTE:BB	OWN	-	-	-	-	-	-	-	-	-	-	-	-
				PRE	-	-	-	-	-	-	-	-	-	-	-	-

MONTICELLO Nuclear Generating Plant
3rd Interval ISI Plan Rev. 3 June 1, 1992 to May 31, 2002

Category, ItemNO, Class	Summary / CompID / System	Scope / Method / Procedure	Iso No. Comp. Desc. Code Case /Note		Period 1				Period 2				Period 3			
					1	2	3	4	1	2	3	4	1	2	3	4
B-D	102689	ISI/UT/ISI-UT-5	ISI Fig 5	ISI	-	c	-	-	-	-	-	-	b	-	-	-
B3.100	N- 4D IR	AUG/VT/ISI-VT-4.0	N- 4D Inner Radius	AUG	-	-	-	-	-	-	-	-	-	-	-	-
1	Reactor Vessel		NOTE:KK	OWN	-	-	-	-	-	-	-	-	-	-	-	-
				PRE	-	-	-	-	-	-	-	-	-	-	-	-
B-D	102690	ISI/UT/ISI-UT-3A	ISI Fig 5	ISI	-	-	-	-	-	-	-	-	s	-	-	-
B3.90	N- 4D NV		N- 4D Noz/Vsl Weld	AUG	-	-	-	-	-	-	-	-	-	-	-	-
1	Reactor Vessel		NOTE: KK, BB	OWN	-	-	-	-	-	-	-	-	-	-	-	-
				PRE	-	-	-	-	-	-	-	-	-	-	-	-
B-D	102691	ISI/UT/ISI-UT-5	ISI Fig 5	ISI	-	-	-	-	-	-	-	-	s	-	-	-
B3.100	N- 5A IR		N- 5A Inner Radius	AUG	-	-	-	-	-	-	-	-	-	-	-	-
1	Reactor Vessel			OWN	-	-	-	-	-	-	-	-	-	-	-	-
				PRE	-	-	-	-	-	-	-	-	-	-	-	-
B-D	102692	ISI/UT/ISI-UT-3A	ISI Fig 5	ISI	-	-	-	-	-	-	-	-	s	-	-	-
B3.90	N- 5A NV		N- 5A Noz/Vsl Weld	AUG	-	-	-	-	-	-	-	-	-	-	-	-
1	Reactor Vessel		NOTE:BB	OWN	-	-	-	-	-	-	-	-	-	-	-	-
				PRE	-	-	-	-	-	-	-	-	-	-	-	-
B-D	102693	ISI/UT/ISI-UT-5	ISI Fig 5	ISI	c	-	-	-	-	-	-	-	-	-	-	-
B3.100	N- 5B IR		N- 5B Inner Radius	AUG	-	-	-	-	-	-	-	-	-	-	-	-
1	Reactor Vessel			OWN	-	-	-	-	-	-	-	-	-	-	-	-
				PRE	-	-	-	-	-	-	-	-	-	-	-	-
B-D	102694	ISI/UT/ISI-UT-3A	ISI Fig 5	ISI	c	-	-	-	-	-	-	-	-	-	-	-
B3.90	N- 5B NV		N- 5B Noz/Vsl Weld	AUG	-	-	-	-	-	-	-	-	-	-	-	-
1	Reactor Vessel		NOTE:BB	OWN	-	-	-	-	-	-	-	-	-	-	-	-
				PRE	-	-	-	-	-	-	-	-	-	-	-	-
B-D	102695	ISI/UT/ISI-UT-5	ISI Fig 5	ISI	c	-	-	-	-	-	-	-	-	-	-	-
B3.100	N- 8A IR		N- 8A Inner Radius	AUG	-	-	-	-	-	-	-	-	-	-	-	-
1	Reactor Vessel			OWN	-	-	-	-	-	-	-	-	-	-	-	-
				PRE	-	-	-	-	-	-	-	-	-	-	-	-
B-D	102696	ISI/UT/ISI-UT-3A	ISI Fig 5	ISI	c	-	-	-	-	-	-	-	-	-	-	-
B3.90	N- 8A NV		N- 8A Noz/Vsl Weld	AUG	-	-	-	-	-	-	-	-	-	-	-	-
1	Reactor Vessel		NOTE:BB	OWN	-	-	-	-	-	-	-	-	-	-	-	-
				PRE	-	-	-	-	-	-	-	-	-	-	-	-
B-D	102697	ISI/UT/ISI-UT-5	ISI Fig 5	ISI	-	-	-	-	-	-	-	-	-	s	-	-
B3.100	N- 8B IR		N- 8B Inner Radius	AUG	-	-	-	-	-	-	-	-	-	-	-	-
1	Reactor Vessel			OWN	-	-	-	-	-	-	-	-	-	-	-	-
				PRE	-	-	-	-	-	-	-	-	-	-	-	-
B-D	102698	ISI/UT/ISI-UT-3A	ISI Fig 5	ISI	-	-	-	-	-	-	-	-	-	s	-	-
B3.90	N- 8B NV		N- 8B Vsl/Noz Weld	AUG	-	-	-	-	-	-	-	-	-	-	-	-
1	Reactor Vessel		NOTE:BB	OWN	-	-	-	-	-	-	-	-	-	-	-	-
				PRE	-	-	-	-	-	-	-	-	-	-	-	-

MONTICELLO Nuclear Generating . . .
3rd Interval ISI Plan Rev. 3 June 1, 1992 to May 31, 2002

Category, ItemNO, Class	Summary / CompID / System	Scope / Method / Procedure	Iso No. Comp. Desc. Code Case /Note		Period 1				Period 2				Period 3			
					1	2	3	4	1	2	3	4	1	2	3	4
B-D	102679	ISI/UT/ISI-UT-5	ISI Fig 5	ISI	-	-	-	-	-	c	-	-	-	-	-	-
B3.100	N- 3C IR		N- 3C Inner Radius	AUG	-	-	-	-	-	-	-	-	-	-	-	-
1	Reactor Vessel			OWN	-	-	-	-	-	-	-	-	-	-	-	-
				PRE	-	-	-	-	-	-	-	-	-	-	-	-
B-D	102680	ISI/UT/ISI-UT-3A	ISI Fig 5	ISI	-	-	-	-	-	c	-	-	-	-	-	-
B3.90	N- 3C NV		N- 3C Noz/Vsl Weld	AUG	-	-	-	-	-	-	-	-	-	-	-	-
1	Reactor Vessel			OWN	-	-	-	-	-	-	-	-	-	-	-	-
				PRE	-	-	-	-	-	-	-	-	-	-	-	-
B-D	102681	ISI/UT/ISI-UT-5	ISI Fig 5	ISI	-	-	-	-	-	-	-	-	s	-	-	-
B3.100	N- 3D IR		N- 3D Inner Radius	AUG	-	-	-	-	-	-	-	-	-	-	-	-
1	Reactor Vessel			OWN	-	-	-	-	-	-	-	-	-	-	-	-
				PRE	-	-	-	-	-	-	-	-	-	-	-	-
B-D	102682	ISI/UT/ISI-UT-3A	ISI Fig 5	ISI	-	-	-	-	-	-	-	-	s	-	-	-
B3.90	N- 3D NV		N- 3D Vsl/Noz Weld	AUG	-	-	-	-	-	-	-	-	-	-	-	-
1	Reactor Vessel			OWN	-	-	-	-	-	-	-	-	-	-	-	-
				PRE	-	-	-	-	-	-	-	-	-	-	-	-
B-D	102683	ISI/UT/ISI-UT-5	ISI Fig 5	ISI	-	c	-	-	-	-	-	-	b	-	-	-
B3.100	N- 4A IR	ISI/VT/ISI-VT-4.0	N- 4A Inner Radius	AUG	-	-	-	-	-	-	-	-	-	-	-	-
1	Reactor Vessel		NOTE:KK	OWN	-	-	-	-	-	-	-	-	-	-	-	-
				PRE	-	-	-	-	-	-	-	-	-	-	-	-
B-D	102684	ISI/UT/ISI-UT-3A	ISI Fig 5	ISI	-	c	-	-	-	-	-	-	-	-	-	-
B3.90	N- 4A NV		N- 4A Noz/Vsl Weld	AUG	-	-	-	-	-	-	-	-	-	-	-	-
1	Reactor Vessel		NOTE: KK, BB	OWN	-	-	-	-	-	-	-	-	-	-	-	-
				PRE	-	-	-	-	-	-	-	-	-	-	-	-
B-D	102685	AUG/VT/ISI-VT-4.0	ISI Fig 5	ISI	c	-	-	-	-	B	-	-	b	-	-	-
B3.100	N- 4B IR	ISI/UT/ISI-VT-5.0	N- 4B Inner Radius	AUG	-	-	-	-	-	-	-	-	-	-	-	-
1	Reactor Vessel		NOTE:KK	OWN	-	-	-	-	-	-	-	-	-	-	-	-
				PRE	-	-	-	-	-	-	-	-	-	-	-	-
B-D	102686	ISI/UT/ISI-UT-3A	ISI Fig 5	ISI	-	-	-	-	-	c	-	-	-	-	-	-
B3.90	N- 4B NV		N- 4B Noz/Vsl Weld	AUG	-	-	-	-	-	-	-	-	-	-	-	-
1	Reactor Vessel		NOTE: KK, BB	OWN	-	-	-	-	-	-	-	-	-	-	-	-
				PRE	-	-	-	-	-	-	-	-	-	-	-	-
B-D	102687	AUG/VT/ISI-VT-4.0	ISI Fig 5	ISI	c	-	-	-	-	B	-	-	b	-	-	-
B3.100	N- 4C IR	ISI/UT/ISI-UT-5	N- 4C Inner Radius	AUG	-	-	-	-	-	-	-	-	-	-	-	-
1	Reactor Vessel		NOTE:KK	OWN	-	-	-	-	-	-	-	-	-	-	-	-
				PRE	-	-	-	-	-	-	-	-	-	-	-	-
B-D	102688	ISI/UT/ISI-UT-3A	ISI Fig 5	ISI	c	-	-	-	-	-	-	-	-	-	-	-
B3.90	N- 4C NV		N- 4C Noz/Vsl Weld	AUG	-	-	-	-	-	-	-	-	-	-	-	-
1	Reactor Vessel		NOTE: KK, BB	OWN	-	-	-	-	-	-	-	-	-	-	-	-
				PRE	-	-	-	-	-	-	-	-	-	-	-	-

MONTICELLO Nuclear Generating Plant
3rd Interval ISI Plan Rev. 3 June 1, 1992 to May 31, 2002

Category, ItemNO, Class	Summary / CompID / System	Scope / Method / Procedure	Iso No. Comp. Desc. Code Case /Note		Period 1				Period 2				Period 3			
					1	2	3	4	1	2	3	4	1	2	3	4
B-G-1	102709	ISI/UT/ISI-UT-7	ISI Fig 6	ISI	c	-	-	-	-	B	-	-	-	b	-	-
B6.40	Ligaments		Threads in Flange	AUG	-	-	-	-	-	-	-	-	-	-	-	-
1	Reactor Vessel			OWN	-	-	-	-	-	-	-	-	-	-	-	-
				PRE	-	-	-	-	-	-	-	-	-	-	-	-
B-G-1	102710	ISI/PT/ISI-PT-1	ISI Fig 6	ISI	c	-	-	-	-	B	-	-	-	-	-	-
B6.10	Nuts	ISI/MT/ISI-MT-2	64 RPV Nuts	AUG	-	-	-	-	-	-	-	-	-	-	-	-
1	Reactor Vessel			OWN	-	-	-	-	-	-	-	-	-	-	-	-
				PRE	-	-	-	-	-	-	-	-	-	-	-	-
B-G-1	102711	ISI/UT/ISI-UT-4	ISI Fig 6	ISI	c	-	-	-	-	B	-	-	-	b	-	-
B6.20	Studs	ISI/UT/ISI-UT-4C	64 RPV Studs	AUG	-	-	-	-	-	-	-	-	-	-	-	-
1	Reactor Vessel		NOTE:AA	OWN	-	-	-	-	-	-	-	-	-	-	-	-
				PRE	-	-	-	-	-	-	-	-	-	-	-	-
B-G-1	102712		ISI Fig 6	ISI	-	-	-	-	-	-	-	-	-	-	-	-
B6.30	Studs		64 RPV Studs, Remove	AUG	-	-	-	-	-	-	-	-	-	-	-	-
1	Reactor Vessel			OWN	-	-	-	-	-	-	-	-	-	-	-	-
				PRE	-	-	-	-	-	-	-	-	-	-	-	-
B-G-1	102713	ISI/VT/ISI-VT-1.0	ISI Fig 6	ISI	c	-	-	-	-	B	-	-	-	-	-	-
B6.50	Washers		64 Washers	AUG	-	-	-	-	-	-	-	-	-	-	-	-
1	Reactor Vessel			OWN	-	-	-	-	-	-	-	-	-	-	-	-
				PRE	-	-	-	-	-	-	-	-	-	-	-	-
B-G-2	102714		ISI Fig 2	ISI	-	-	-	-	-	-	-	-	-	-	-	-
B7.80	30-27B		CRD Housing Bolts	AUG	-	-	-	-	-	-	-	-	-	-	-	-
1	CRD Housings			OWN	-	-	-	-	-	-	-	-	-	-	-	-
				PRE	-	-	-	-	-	-	-	-	-	-	-	-
B-G-2	102715		ISI Fig 2	ISI	-	-	-	-	-	-	-	-	-	-	-	-
B7.80	38-43B		CRD Housing Bolts	AUG	-	-	-	-	-	-	-	-	-	-	-	-
1	CRD Housings			OWN	-	-	-	-	-	-	-	-	-	-	-	-
				PRE	-	-	-	-	-	-	-	-	-	-	-	-
B-N-1	102716	ISI/VT/ISI-VT-4.0	ISI Fig 0	ISI	-	c	-	-	-	-	-	-	b	-	-	-
B13.10	C- 1		Top Core Guides & Br	AUG	-	-	-	-	-	-	-	-	-	-	-	-
1	Reactor Vessel			OWN	-	-	-	-	-	-	-	-	-	-	-	-
				PRE	-	-	-	-	-	-	-	-	-	-	-	-
B-N-1	102717	ISI/VT/ISI-VT-4.0	ISI Fig 0	ISI	-	c	-	-	-	-	-	-	b	b	-	-
B13.10	C- 2		Jet Pump Top Asbly	AUG	-	-	-	-	-	-	-	-	-	-	-	-
1	Reactor Vessel			OWN	-	-	-	-	-	-	-	-	-	-	-	-
				PRE	-	-	-	-	-	-	-	-	-	-	-	-
B-N-1	102718	ISI/VT/ISI-VT-4.0	ISI Fig 0	ISI	-	c	-	-	-	-	-	-	b	-	-	-
B13.10	C- 3		Shroud Shelf	AUG	-	-	-	-	-	-	-	-	-	-	-	-
1	Reactor Vessel			OWN	-	-	-	-	-	-	-	-	-	-	-	-
				PRE	-	-	-	-	-	-	-	-	-	-	-	-

MONTICELLO Nuclear Generating Plant
3rd Interval ISI Plan Rev. 3 June 1, 1992 to May 31, 2002

Category, ItemNO, Class	Summary / CompID / System	Scope / Method / Procedure	Iso No. Comp. Desc. Code Case /Note		Period 1				Period 2				Period 3			
					1	2	3	4	1	2	3	4	1	2	3	4
B-D	102699	ISI/UT/ISI-UT-5	ISI Fig 5	ISI	-	c	-	-	-	-	-	-	-	-	-	-
B3.100	N- 9 IR		N- 9 Inner Radius	AUG	-	-	-	-	-	-	-	-	-	-	-	-
1	Reactor Vessel			OWN	-	-	-	-	-	-	-	-	-	-	-	-
				PRE	-	-	-	-	-	-	-	-	-	-	-	-
B-D	102700	ISI/UT/ISI-UT-3A	ISI Fig 5	ISI	-	c	-	-	-	-	-	-	-	-	-	-
B3.90	N- 9 NV		N- 9 Ves/Noz Weld	AUG	-	-	-	-	-	-	-	-	-	-	-	-
1	Reactor Vessel			OWN	-	-	-	-	-	-	-	-	-	-	-	-
				PRE	-	-	-	-	-	-	-	-	-	-	-	-
B-E	102701	AUG/VT/ISI-VT-4.0	ISI Fig 5	ISI	-	-	-	-	-	-	-	-	-	s	-	-
B4.13	N-11A NV	ISI/VT2/Note LL	N-11A Vsl/Noz Weld	AUG	-	-	-	-	-	-	-	-	-	-	-	-
1	Reactor Vessel		NOTE:LL	OWN	-	-	-	-	-	-	-	-	-	-	-	-
				PRE	-	-	-	-	-	-	-	-	-	-	-	-
B-E	102702	AUG/VT/ISI-VT-4.0	ISI Fig 5	ISI	-	-	-	-	-	-	-	-	-	s	-	-
B4.13	N-11B NV	ISI/VT2/Note LL	N-11B Noz/Vsl Weld	AUG	-	-	-	-	-	-	-	-	-	-	-	-
1	Reactor Vessel		NOTE:LL	OWN	-	-	-	-	-	-	-	-	-	-	-	-
				PRE	-	-	-	-	-	-	-	-	-	-	-	-
B-E	102703	ISI/VT2/Note LL	ISI Fig 5	ISI	-	-	-	-	-	-	-	-	-	-	-	-
B4.13	N-12A NV		N-12A Noz/Vsl Weld	AUG	-	-	-	-	-	-	-	-	-	-	-	-
1	Reactor Vessel		NOTE:LL	OWN	-	-	-	-	-	-	-	-	-	-	-	-
				PRE	-	-	-	-	-	-	-	-	-	-	-	-
B-E	102704	ISI/VT2/Note LL	ISI Fig 5	ISI	-	-	-	-	-	-	-	-	-	-	-	-
B4.13	N-12B NV		N-12B Noz/Vsl Weld	AUG	-	-	-	-	-	-	-	-	-	-	-	-
1	Reactor Vessel		NOTE:LL	OWN	-	-	-	-	-	-	-	-	-	-	-	-
				PRE	-	-	-	-	-	-	-	-	-	-	-	-
B-E	102705		ISI Fig 5	ISI	-	-	-	-	-	-	-	-	-	-	-	-
B4.11	N-13 NV		N13 Flange-to-Nozzle	AUG	-	-	-	-	-	-	-	-	-	-	-	-
1	Reactor Vessel		NOTE: RELIEF 5	OWN	-	-	-	-	-	-	-	-	-	-	-	-
				PRE	-	-	-	-	-	-	-	-	-	-	-	-
B-E	102706		ISI Fig 5	ISI	-	-	-	-	-	-	-	-	-	-	-	-
B4.11	N-14 NV		N14 Flange-to-Nozzle	AUG	-	-	-	-	-	-	-	-	-	-	-	-
1	Reactor Vessel		NOTE: RELIEF 5	OWN	-	-	-	-	-	-	-	-	-	-	-	-
				PRE	-	-	-	-	-	-	-	-	-	-	-	-
B-J	102707	ISI/PT/ISI-PT-1	ISI Fig 5	ISI	-	c	-	-	-	-	-	-	-	-	-	-
B9.21	W- 1		Nozzle to End Cap	AUG	-	-	-	-	-	-	-	-	-	-	-	-
1	CRD Return			OWN	-	-	-	-	-	-	-	-	-	-	-	-
				PRE	-	-	-	-	-	-	-	-	-	-	-	-
B-G-1	102708	ISI/VT/ISI-VT-1.0	ISI Fig 6	ISI	c	-	-	-	-	B	-	-	-	b	-	-
B6.50	Bushings		64 Bushings	AUG	-	-	-	-	-	-	-	-	-	-	-	-
1	Reactor Vessel			OWN	-	-	-	-	-	-	-	-	-	-	-	-
				PRE	-	-	-	-	-	-	-	-	-	-	-	-

MONTICELLO Nuclear Generating Plant
3rd Interval ISI Plan Rev. 3 June 1, 1992 to May 31, 2002

Category, ItemNO, Class	Summary / CompID / System	Scope / Method / Procedure	Iso No. Comp. Desc. Code Case /Note		Period 1				Period 2				Period 3			
					1	2	3	4	1	2	3	4	1	2	3	4
B-F	102729	ISI/PT/ISI-PT-1	ISI-16	ISI	c	-	-	-	-	-	-	-	-	-	-	-
B5.10	W- 1	ISI/UT/ISI-UT-16	Safe End / Nozzle 8A	AUG	-	-	-	-	-	-	-	-	-	-	-	-
1	Jet Pmp Instrmtation		NOTE:CC	OWN	-	-	-	-	-	-	-	-	-	-	-	-
				PRE	-	-	-	-	-	-	-	-	-	-	-	-
B-F	102730	ISI/PT/ISI-PT-1	ISI-16	ISI	-	-	-	-	-	-	-	-	-	s	-	-
B5.10	W- 2	ISI/UT/ISI-UT-16	Safe End / Nozzle 8B	AUG	-	-	-	-	-	-	-	-	-	-	-	-
1	Jet Pmp Instrmtation		NOTE:CC	OWN	-	-	-	-	-	-	-	-	-	-	-	-
				PRE	-	-	-	-	-	-	-	-	-	-	-	-
B-F	102731	ISI/PT/ISI-PT-1	ISI-19	ISI	c	-	-	-	-	-	-	-	-	-	-	-
B5.20	W- 1	ISI/UT/ISI-UT-16	Nozzle-to-Safe End	AUG	-	-	-	-	-	-	-	-	-	-	-	-
1	Inst Nozzle N-12A		NOTE:CC	OWN	-	-	-	-	-	-	-	-	-	-	-	-
				PRE	-	-	-	-	-	-	-	-	-	-	-	-
B-J	102732	ISI/PT/ISI-PT-1	ISI-19	ISI	c	-	-	-	-	-	-	-	-	-	-	-
B9.40	W- 2		Safe End-to-Reducer	AUG	-	-	-	-	-	-	-	-	-	-	-	-
1	Inst Nozzle N-12A			OWN	-	-	-	-	-	-	-	-	-	-	-	-
				PRE	-	-	-	-	-	-	-	-	-	-	-	-
B-J	102733		ISI-19	ISI	-	-	-	-	-	-	-	-	-	-	-	-
B9.40	W- 3		Reducer-to-Pipe	AUG	-	-	-	-	-	-	-	-	-	-	-	-
1	Inst Nozzle N-12A			OWN	-	-	-	-	-	-	-	-	-	-	-	-
				PRE	-	-	-	-	-	-	-	-	-	-	-	-
B-J	102734		ISI-19	ISI	-	-	-	-	-	-	-	-	-	-	-	-
B9.40	W- 4		Pipe-to-Coupling	AUG	-	-	-	-	-	-	-	-	-	-	-	-
1	Inst Nozzle N-12A			OWN	-	-	-	-	-	-	-	-	-	-	-	-
				PRE	-	-	-	-	-	-	-	-	-	-	-	-
B-J	102735		ISI-19	ISI	-	-	-	-	-	-	-	-	-	-	-	-
B9.40	W- 5		Coupling-to-Coupling	AUG	-	-	-	-	-	-	-	-	-	-	-	-
1	Inst Nozzle N-12A			OWN	-	-	-	-	-	-	-	-	-	-	-	-
				PRE	-	-	-	-	-	-	-	-	-	-	-	-
B-F	102736	ISI/PT/ISI-PT-1	ISI-19	ISI	-	-	-	-	-	c	-	-	-	-	-	-
B5.20	W- 6		Nozzle-to-Pipe	AUG	-	-	-	-	-	-	-	-	-	-	-	-
1	Inst Nozzle N-12B		NOTE:CC	OWN	-	-	-	-	-	-	-	-	-	-	-	-
				PRE	-	-	-	-	-	-	-	-	-	-	-	-
B-J	102737	ISI/MT/ISI-MT-1	ISI-19	ISI	-	-	-	-	-	c	-	-	-	-	-	-
B9.40	W- 7		Pipe-to-Reducer	AUG	-	-	-	-	-	-	-	-	-	-	-	-
1	Inst Nozzle N-12B			OWN	-	-	-	-	-	-	-	-	-	-	-	-
				PRE	-	-	-	-	-	-	-	-	-	-	-	-
B-J	102738		ISI-19	ISI	-	-	-	-	-	-	-	-	-	-	-	-
B9.40	W- 8		Reducer-to-Pipe	AUG	-	-	-	-	-	-	-	-	-	-	-	-
1	Inst Nozzle N-12B			OWN	-	-	-	-	-	-	-	-	-	-	-	-
				PRE	-	-	-	-	-	-	-	-	-	-	-	-

MONTICELLO Nuclear Generating Plant
3rd Interval ISI Plan Rev. 3 June 1, 1992 to May 31, 2002

Category, ItemNO, Class	Summary / CompID / System	Scope / Method / Procedure	Iso No. Comp. Desc. Code Case /Note		Period 1				Period 2				Period 3			
					1	2	3	4	1	2	3	4	1	2	3	4
B-N-1	102719	ISI/VT/ISI-VT-4.0	ISI Fig 0	ISI	-	c	-	-	-	-	-	-	b	-	-	-
B13.10	C- 4		Surv. Sample & Brack	AUG	-	-	-	-	-	-	-	-	-	-	-	-
1	Reactor Vessel			OWN	-	-	-	-	-	-	-	-	-	-	-	-
				PRE	-	-	-	-	-	-	-	-	-	-	-	-
B-N-1	102720	ISI/VT/ISI-VT-4.0	ISI Fig 0	ISI	-	c	-	-	-	-	-	-	b	b	-	-
B13.10	C- 5		CS Sparger & Bracket	AUG	-	-	-	-	-	-	-	-	-	-	-	-
1	Reactor Vessel			OWN	-	-	-	-	-	-	-	-	-	-	-	-
				PRE	-	-	-	-	-	-	-	-	-	-	-	-
B-N-1	102721	ISI/VT/ISI-VT-4.0	ISI Fig 0	ISI	-	c	-	-	-	-	-	-	b	-	-	-
B13.10	C- 6		FW Sparger & Bracket	AUG	-	-	-	-	-	-	-	-	-	-	-	-
1	Reactor Vessel			OWN	-	-	-	-	-	-	-	-	-	-	-	-
				PRE	-	-	-	-	-	-	-	-	-	-	-	-
B-N-1	102722	ISI/VT/ISI-VT-4.0	ISI Fig 0	ISI	-	c	-	-	-	-	-	-	b	-	-	-
B13.10	C- 7		Shroud Supports	AUG	-	-	-	-	-	-	-	-	-	-	-	-
1	Reactor Vessel			OWN	-	-	-	-	-	-	-	-	-	-	-	-
				PRE	-	-	-	-	-	-	-	-	-	-	-	-
B-N-1	102723	ISI/VT/ISI-VT-4.0	ISI Fig 0	ISI	-	c	-	-	-	-	-	-	b	-	-	-
B13.10	C- 8		Steam Dryer Brackets	AUG	-	-	-	-	-	-	-	-	-	-	-	-
1	Reactor Vessel			OWN	-	-	-	-	-	-	-	-	-	-	-	-
				PRE	-	-	-	-	-	-	-	-	-	-	-	-
B-N-1	102724	ISI/VT/ISI-VT-4.0	ISI Fig 0	ISI	-	c	-	-	-	-	-	-	b	-	-	-
B13.10	C- 9		Stm Dryer Supp Brkts	AUG	-	-	-	-	-	-	-	-	-	-	-	-
1	Reactor Vessel			OWN	-	-	-	-	-	-	-	-	-	-	-	-
				PRE	-	-	-	-	-	-	-	-	-	-	-	-
B-N-2	102725	ISI/VT/ISI-VT-4.0	ISI Fig 0	ISI	-	-	-	-	-	-	-	-	-	s	-	-
B13.20	C- X		Interior Attachments	AUG	-	-	-	-	-	-	-	-	-	-	-	-
1	Reactor Vessel			OWN	-	-	-	-	-	-	-	-	-	-	-	-
				PRE	-	-	-	-	-	-	-	-	-	-	-	-
B-N-2	102726	ISI/VT/ISI-VT-4.0	ISI Fig 0	ISI	-	-	-	-	-	-	-	-	-	s	-	-
B13.30	C- Y		Interior Attachments	AUG	-	-	-	-	-	-	-	-	-	-	-	-
1	Reactor Vessel			OWN	-	-	-	-	-	-	-	-	-	-	-	-
				PRE	-	-	-	-	-	-	-	-	-	-	-	-
B-N-2	102727	ISI/VT/ISI-VT-4.0	ISI Fig 0	ISI	-	-	-	-	-	-	-	-	-	s	-	-
B13.40	C- Z		Core Support Strut.	AUG	-	-	-	-	-	-	-	-	-	-	-	-
1	Reactor Vessel			OWN	-	-	-	-	-	-	-	-	-	-	-	-
				PRE	-	-	-	-	-	-	-	-	-	-	-	-
B-N-1	102728	ISI/VT/ISI-VT-4.0	ISI Fig 0	ISI	-	c	-	-	-	-	-	-	b	-	-	-
B13.10	C-10		Stm Dryer&Seperator	AUG	-	-	-	-	-	-	-	-	-	-	-	-
1	Reactor Vessel			OWN	-	-	-	-	-	-	-	-	-	-	-	-
				PRE	-	-	-	-	-	-	-	-	-	-	-	-

MONTICELLO Nuclear Generating Plant
3rd Interval ISI Plan Rev. 3 June 1, 1992 to May 31, 2002

Category, ItemNO, Class	Summary / CompID / System	Scope / Method / Procedure	Iso No. Comp. Desc. Code Case /Note		Period 1				Period 2				Period 3			
					1	2	3	4	1	2	3	4	1	2	3	4
C-C	102753	ISI/MT/ISI-MT-1	ISI-49	ISI	-	c	-	-	-	-	-	-	-	-	-	-
C3.30	Support, Pump A	ISI/VT/ISI-VT-2.0	Pump Support	AUG	-	-	-	-	-	-	-	-	-	-	-	-
2	Core Spray Pumps			OWN	-	-	-	-	-	-	-	-	-	-	-	-
				PRE	-	-	-	-	-	-	-	-	-	-	-	-
C-C	102754	ISI/MT/ISI-MT-1	ISI-49	ISI	c	-	-	-	-	-	-	-	-	-	-	-
C3.30	Support, Pump B	ISI/VT/ISI-VT-2.0	Pump Support	AUG	-	-	-	-	-	-	-	-	-	-	-	-
2	Core Spray Pumps			OWN	-	-	-	-	-	-	-	-	-	-	-	-
				PRE	-	-	-	-	-	-	-	-	-	-	-	-
C-F-2	102755		ISI-13142-26-B	ISI	-	-	-	-	-	-	-	-	-	-	-	-
CX.XX	W-11		Elbow-to-Pipe	AUG	-	-	-	-	-	-	-	-	-	-	-	-
2	Core Spray B			OWN	-	-	-	-	-	-	-	-	-	-	-	-
				PRE	-	-	-	-	-	-	-	-	-	-	-	-
B-J	105001	ISI/PT/ISI-PT-1	ISI-782A	ISI	c	-	-	-	-	-	-	-	-	-	-	-
B9.40	W-23A		Pipe-to-Coupling	AUG	-	-	-	-	-	-	-	-	-	-	-	-
1	Head Vent			OWN	-	-	-	-	-	-	-	-	-	-	-	-
				PRE	-	-	-	-	-	-	-	-	-	-	-	-
B-J	105002	ISI/PT/ISI-PT-1	ISI-782A	ISI	c	-	-	-	-	-	-	-	-	-	-	-
B9.40	W-23B		Coupling-to-Pipe	AUG	-	-	-	-	-	-	-	-	-	-	-	-
1	Head Vent			OWN	-	-	-	-	-	-	-	-	-	-	-	-
				PRE	-	-	-	-	-	-	-	-	-	-	-	-
B-J	105003	ISI/PT/ISI-PT-1	ISI-782A	ISI	c	-	-	-	-	-	-	-	-	-	-	-
B9.40	W-26A		Pipe-to-Coupling	AUG	-	-	-	-	-	-	-	-	-	-	-	-
1	Head Vent			OWN	-	-	-	-	-	-	-	-	-	-	-	-
				PRE	-	-	-	-	-	-	-	-	-	-	-	-
B-J	105004	ISI/PT/ISI-PT-1	ISI-782A	ISI	c	-	-	-	-	-	-	-	-	-	-	-
B9.40	W-26B		Coupling-to-Pipe	AUG	-	-	-	-	-	-	-	-	-	-	-	-
1	Head Vent			OWN	-	-	-	-	-	-	-	-	-	-	-	-
				PRE	-	-	-	-	-	-	-	-	-	-	-	-
B-A	105005	ISI/UT/ISI-UT-3A	ISI Fig 4	ISI	c	-	-	-	-	B	-	-	-	b	-	-
B1.11	VCBB-4		Circ Weld @ N4B	AUG	-	-	-	-	-	-	-	-	-	-	-	-
1	Reactor Vessel			OWN	-	-	-	-	-	-	-	-	-	-	-	-
				PRE	-	-	-	-	-	-	-	-	-	-	-	-
C-F-2	105006	ISI/MT/ISI-MT-1	ISI-13142-42-A	ISI	c	-	-	-	-	-	-	-	-	-	-	-
C5.51	W-21A	ISI/UT/ISI-UT-1	Pipe-to-Pipe	AUG	-	-	-	-	-	-	-	-	-	-	-	-
2	HPCI Steam			OWN	-	-	-	-	-	-	-	-	-	-	-	-
				PRE	-	-	-	-	-	-	-	-	-	-	-	-
C-F-2	105007	ISI/MT/ISI-MT-1	ISI-13142-42-A	ISI	c	-	-	-	-	-	-	-	-	-	-	-
C5.51	W-21B	ISI/UT/ISI-UT-1	Pipe-to Pipe	AUG	-	-	-	-	-	-	-	-	-	-	-	-
2	HPCI Steam			OWN	-	-	-	-	-	-	-	-	-	-	-	-
				PRE	-	-	-	-	-	-	-	-	-	-	-	-

MONTICELLO Nuclear Generating Plant
3rd Interval ISI Plan Rev. 3 June 1, 1992 to May 31, 2002

Category, ItemNO, Class	Summary / CompID / System	Scope / Method / Procedure	Iso No. Comp. Desc. Code Case /Note		Period 1				Period 2				Period 3			
					1	2	3	4	1	2	3	4	1	2	3	4
B-J	102739		ISI-19	ISI	-	-	-	-	-	-	-	-	-	-	-	-
B9.40	W- 9		Pipe-to-Coupling	AUG	-	-	-	-	-	-	-	-	-	-	-	-
1	Inst Nozzle N-12B			OWN	-	-	-	-	-	-	-	-	-	-	-	-
				PRE	-	-	-	-	-	-	-	-	-	-	-	-
B-J	102740		ISI-19	ISI	-	-	-	-	-	-	-	-	-	-	-	-
B9.40	W-10		Coupling-to-Coupling	AUG	-	-	-	-	-	-	-	-	-	-	-	-
1	Inst Nozzle N-12B			OWN	-	-	-	-	-	-	-	-	-	-	-	-
				PRE	-	-	-	-	-	-	-	-	-	-	-	-
F-B	102741	ISI/VT/ISI-VT-2.0	ISI-47	ISI	-	c	-	-	-	-	-	-	-	-	-	-
F-A,B,C	Pump Supp A		Pump Support	AUG	-	-	-	-	-	-	-	-	-	-	-	-
2	RCIC Turbine & Pump			OWN	-	-	-	-	-	-	-	-	-	-	-	-
				PRE	-	-	-	-	-	-	-	-	-	-	-	-
F-B	102742	ISI/VT/ISI-VT-2.0	ISI-47	ISI	-	c	-	-	-	-	-	-	-	-	-	-
F-A,B,C	Pump Supp B		Pump Support	AUG	-	-	-	-	-	-	-	-	-	-	-	-
2	RCIC Turbine & Pump			OWN	-	-	-	-	-	-	-	-	-	-	-	-
				PRE	-	-	-	-	-	-	-	-	-	-	-	-
F-B	102743	ISI/VT/ISI-VT-2.0	ISI-47	ISI	-	c	-	-	-	-	-	-	-	-	-	-
F-A,B,C	Pump Supp C		Pump Support	AUG	-	-	-	-	-	-	-	-	-	-	-	-
2	RCIC Turbine & Pump			OWN	-	-	-	-	-	-	-	-	-	-	-	-
				PRE	-	-	-	-	-	-	-	-	-	-	-	-
F-B	102744	ISI/VT/ISI-VT-2.0	ISI-47	ISI	-	c	-	-	-	-	-	-	-	-	-	-
F-A,B,C	Pump Supp D		Pump Support	AUG	-	-	-	-	-	-	-	-	-	-	-	-
2	RCIC Turbine & Pump			OWN	-	-	-	-	-	-	-	-	-	-	-	-
				PRE	-	-	-	-	-	-	-	-	-	-	-	-
C-C	102745	ISI/VT/ISI-VT-2.0	ISI-48	ISI	-	-	-	-	-	-	-	-	s	-	-	-
C3.30	RHR Support C	ISI/MT/ISI-MT-1	Pump Support	AUG	-	-	-	-	-	-	-	-	-	-	-	-
2	RHR Pumps			OWN	-	-	-	-	-	-	-	-	-	-	-	-
				PRE	-	-	-	-	-	-	-	-	-	-	-	-
C-C	102747	ISI/MT/ISI-MT-1	ISI-48	ISI	-	-	-	-	-	c	-	-	-	-	-	-
C3.30	RHR Support D	ISI/VT/ISI-VT-2.0	Pump Support	AUG	-	-	-	-	-	-	-	-	-	-	-	-
2	RHR Pumps			OWN	-	-	-	-	-	-	-	-	-	-	-	-
				PRE	-	-	-	-	-	-	-	-	-	-	-	-
C-C	102751	ISI/MT/ISI-MT-1	ISI-48	ISI	-	-	-	-	-	c	-	-	-	-	-	-
C3.30	RHR Support A	ISI/VT/ISI-VT-2.0	Pump Support	AUG	-	-	-	-	-	-	-	-	-	-	-	-
2	RHR Pumps			OWN	-	-	-	-	-	-	-	-	-	-	-	-
				PRE	-	-	-	-	-	-	-	-	-	-	-	-
C-C	102752	ISI/MT/ISI-MT-1	ISI-48	ISI	c	-	-	-	-	-	-	-	-	-	-	-
C3.30	RHR Support B	ISI/VT/ISI-VT-2.0	Pump Support	AUG	-	-	-	-	-	-	-	-	-	-	-	-
2	RHR Pumps			OWN	-	-	-	-	-	-	-	-	-	-	-	-
				PRE	-	-	-	-	-	-	-	-	-	-	-	-

MONTICELLO Nuclear Generating Plant
3rd Interval ISI Plan Rev. 3 June 1, 1992 to May 31, 2002

Category, ItemNO, Class	Summary / CompID / System	Scope / Method / Procedure	Iso No. Comp. Desc. Code Case /Note		Period 1				Period 2				Period 3			
					1	2	3	4	1	2	3	4	1	2	3	4
HELB	105018	AUG/PT/ISI-PT-1	NC-ISI-51	ISI	-	c	-	-	B	-	-	-	b	b	-	-
NCR95068,	W-13	AUG/UT/ISI-UT-16	TEE TO PIPE	AUG	-	-	-	-	-	-	-	-	-	-	-	-
	CRD TO RWCU			OWN	-	-	-	-	-	-	-	-	-	-	-	-
				PRE	-	-	-	-	-	-	-	-	-	-	-	-
F-B	105019	ISI/VT/ISI-VT-2.0	ISI-782A	ISI	-	-	-	-	c	-	-	-	-	-	-	-
F-A,B,C	H-5		Hanger	AUG	-	-	-	-	-	-	-	-	-	-	-	-
1	Head Vent			OWN	-	-	-	-	-	-	-	-	-	-	-	-
				PRE	-	-	-	-	-	-	-	-	-	-	-	-
F-B	105020	ISI/VT/ISI-VT-2.0	ISI-782A	ISI	-	-	-	-	c	-	-	-	-	-	-	-
F-A,B,C	H-5A		Hanger	AUG	-	-	-	-	-	-	-	-	-	-	-	-
1	Head Vent			OWN	-	-	-	-	-	-	-	-	-	-	-	-
				PRE	-	-	-	-	-	-	-	-	-	-	-	-
F-B	105021	ISI/VT/ISI-VT-2.0	ISI-782A	ISI	-	-	-	-	c	-	-	-	-	-	-	-
F-A,B,C	H-7		Hanger	AUG	-	-	-	-	-	-	-	-	-	-	-	-
1	Head Vent			OWN	-	-	-	-	-	-	-	-	-	-	-	-
				PRE	-	-	-	-	-	-	-	-	-	-	-	-
F-C	105022	ISI/VT/ISI-VT-2.0	ISI-782A	ISI	-	-	-	-	c	-	-	-	-	-	-	-
F-A,B,C	H-17		Spring / Clamp	AUG	-	-	-	-	-	-	-	-	-	-	-	-
1	Head Vent			OWN	-	-	-	-	-	-	-	-	-	-	-	-
				PRE	-	-	-	-	-	-	-	-	-	-	-	-
F-B	105023	ISI/VT/ISI-VT-2.0	ISI-782A-A	ISI	-	-	-	-	c	B	-	-	b	-	-	-
F-A,B,C	H-1		Hanger	AUG	-	-	-	-	-	-	-	-	-	-	-	-
1	Head Vent			OWN	-	-	-	-	-	-	-	-	-	-	-	-
				PRE	-	-	-	-	-	-	-	-	-	-	-	-
F-C	105024	ISI/VT/ISI-VT-2.0	ISI-782A-A	ISI	-	-	-	-	c	B	-	-	b	-	-	-
F-A,B,C	H-2		Spring / Clamp	AUG	-	-	-	-	-	-	-	-	-	-	-	-
1	Head Vent			OWN	-	-	-	-	-	-	-	-	-	-	-	-
				PRE	-	-	-	-	-	-	-	-	-	-	-	-
F-B	105025	ISI/VT/ISI-VT-2.0	ISI-782A-A	ISI	-	-	-	-	c	B	-	-	b	-	-	-
F-A,B,C	H-3		Hanger	AUG	-	-	-	-	-	-	-	-	-	-	-	-
1	Head Vent			OWN	-	-	-	-	-	-	-	-	-	-	-	-
				PRE	-	-	-	-	-	-	-	-	-	-	-	-
B-J	105026	ISI/MT/ISI-MT-1	ISI-782A	ISI	-	-	-	-	-	c	-	-	-	-	-	-
B9.40	W-17A		Pipe-to-Elbow	AUG	-	-	-	-	-	-	-	-	-	-	-	-
1	Head Vent			OWN	-	-	-	-	-	-	-	-	-	-	-	-
				PRE	-	-	-	-	-	-	-	-	-	-	-	-
B-J	105027	ISI/MT/ISI-MT-1	ISI-782A	ISI	-	-	-	-	-	c	-	-	-	-	-	-
B9.40	W-17B		Elbow-to-Pipe	AUG	-	-	-	-	-	-	-	-	-	-	-	-
1	Head Vent			OWN	-	-	-	-	-	-	-	-	-	-	-	-
				PRE	-	-	-	-	-	-	-	-	-	-	-	-

MONTICELLO Nuclear Generating Plant
3rd Interval ISI Plan Rev. 3 June 1, 1992 to May 31, 2002

Category, ItemNO, Class	Summary / CompID / System	Scope / Method / Procedure	Iso No. Comp. Desc. Code Case /Note		Period 1				Period 2				Period 3			
					1	2	3	4	1	2	3	4	1	2	3	4
C-H	105008	ISI/VT2/0255	ISI-13142-42-A	ISI	c	-	-	-	-	-	-	-	-	-	-	-
C7.70	V- 3		Press Retaining Comp	AUG	-	-	-	-	-	-	-	-	-	-	-	-
2	HPCI			OWN	-	-	-	-	-	-	-	-	-	-	-	-
				PRE	-	-	-	-	-	-	-	-	-	-	-	-
HELB	105009	AUG/UT/ISI-UT-1	NC-ISI-37	ISI	-	c	-	-	B	-	-	-	b	b	-	-
NCR95-068	W- 1		Pipe - Pipe	AUG	-	-	-	-	-	-	-	-	-	-	-	-
	RCIC FEEDWATER			OWN	-	-	-	-	-	-	-	-	-	-	-	-
				PRE	-	-	-	-	-	-	-	-	-	-	-	-
HELB	105010	AUG/UT/ISI-UT-1	NC-ISI-37	ISI	-	c	-	-	B	-	-	-	b	b	-	-
NCR95-068	W- 2		Pipe - Tee	AUG	-	-	-	-	-	-	-	-	-	-	-	-
	RCIC FEEDWATER			OWN	-	-	-	-	-	-	-	-	-	-	-	-
				PRE	-	-	-	-	-	-	-	-	-	-	-	-
HELB	105011	AUG/UT/ISI-UT-1	NC-ISI-37	ISI	-	c	-	-	B	-	-	-	b	b	-	-
NCR95-068	W- 3		Tee - Pipe	AUG	-	-	-	-	-	-	-	-	-	-	-	-
	RCIC FEEDWATER			OWN	-	-	-	-	-	-	-	-	-	-	-	-
				PRE	-	-	-	-	-	-	-	-	-	-	-	-
HELB	105012	AUG/UT/ISI-UT-1	NC-ISI-37	ISI	-	c	-	-	B	-	-	-	b	b	-	-
NCR95-068	W- 4		Tee - Elbow	AUG	-	-	-	-	-	-	-	-	-	-	-	-
	RCIC FEEDWATER			OWN	-	-	-	-	-	-	-	-	-	-	-	-
				PRE	-	-	-	-	-	-	-	-	-	-	-	-
HELB	105013	AUG/UT/ISI-UT-1	NC-ISI-37	ISI	-	c	-	-	B	-	-	-	b	b	-	-
NCR95-068	W-12		Pipe - Pipe	AUG	-	-	-	-	-	-	-	-	-	-	-	-
	RCIC FEEDWATER			OWN	-	-	-	-	-	-	-	-	-	-	-	-
				PRE	-	-	-	-	-	-	-	-	-	-	-	-
HELB	105014	AUG/UT/ISI-UT-1	NC-ISI-37	ISI	-	c	-	-	B	-	-	-	b	b	-	-
NCR95-068	W-12A		Pipe - Tee	AUG	-	-	-	-	-	-	-	-	-	-	-	-
	RCIC FEEDWATER			OWN	-	-	-	-	-	-	-	-	-	-	-	-
				PRE	-	-	-	-	-	-	-	-	-	-	-	-
NC	105015	AUG/VT/ISI-VT-1.0	NC-7879-6	ISI	-	c	-	-	-	-	-	-	-	-	-	-
NC-SAC	Tank		Tank Internals	AUG	-	-	-	-	-	-	-	-	-	-	-	-
NC	SBLC			OWN	-	-	-	-	-	-	-	-	-	-	-	-
				PRE	-	-	-	-	-	-	-	-	-	-	-	-
HELB	105016	AUG/PT/ISI-PT-1	NC-ISI-51	ISI	-	-	-	-	B	-	-	-	b	b	-	-
NCR95068,	W-11	AUG/UT/ISI-UT-16	PIPE TO TEE	AUG	-	-	-	-	-	-	-	-	-	-	-	-
	CRD TO RWCU			OWN	-	-	-	-	-	-	-	-	-	-	-	-
				PRE	-	-	-	-	-	-	-	-	-	-	-	-
HELB	105017	AUG/PT/ISI-PT-1	NC-ISI-51	ISI	-	c	-	-	B	-	-	-	b	b	-	-
NCR95068,	W-12	AUG/UT/ISI-UT-16	PIPE TO TEE	AUG	-	-	-	-	-	-	-	-	-	-	-	-
	CRD TO RWCU			OWN	-	-	-	-	-	-	-	-	-	-	-	-
				PRE	-	-	-	-	-	-	-	-	-	-	-	-

MONTICELLO Nuclear Generating Plant
3rd Interval ISI Plan Rev. 3 June 1, 1992 to May 31, 2002

Category, ItemNO, Class	Summary / CompID / System	Scope / Method / Procedure	Iso No. Comp. Desc. Code Case /Note		Period 1				Period 2				Period 3			
					1	2	3	4	1	2	3	4	1	2	3	4
C-F-2	106006	ISI/VT/ISI-VT-2.0	ISI-13142-29A	ISI	-	-	-	-	-	-	-	-	-	-	-	-
C5.50	W-5		ELBOW (90) TO PIPE	AUG	-	-	-	-	-	-	-	-	-	-	-	-
2	RBCCW			OWN	-	-	-	-	-	-	-	-	-	-	-	-
				PRE	-	-	-	-	-	-	-	-	-	-	-	-
C-F-2	106007	ISI/MT/ISI-MT-1	ISI-13142-29A	ISI	-	-	-	-	-	-	-	-	-	-	-	-
C5.50	W-6	ISI/UT/ISI-UT-1	PIPE TO ELBOW (90)	AUG	-	-	-	-	-	-	-	-	-	-	-	-
2	RBCCW			OWN	-	-	-	-	-	-	-	-	-	-	-	-
				PRE	-	-	-	-	-	-	-	-	-	-	-	-
C-F-2	106008	ISI/MT/ISI-MT-1	ISI-13142-29A	ISI	-	-	-	-	-	-	-	-	-	-	-	-
C5.50	W-8	ISI/UT/ISI-UT-1	PIPE TO ELBOW (45)	AUG	-	-	-	-	-	-	-	-	-	-	-	-
2	RBCCW			OWN	-	-	-	-	-	-	-	-	-	-	-	-
				PRE	-	-	-	-	-	-	-	-	-	-	-	-
C-F-2	106009	ISI/MT/ISI-MT-1	ISI-13142-29A	ISI	-	-	-	-	-	-	-	-	-	-	-	-
C5.50	W-9	ISI/UT/ISI-UT-1	ELBOW (45) TO PIPE	AUG	-	-	-	-	-	-	-	-	-	-	-	-
2	RBCCW			OWN	-	-	-	-	-	-	-	-	-	-	-	-
				PRE	-	-	-	-	-	-	-	-	-	-	-	-
C-F-2	106010	ISI/MT/ISI-MT-1	ISI-13142-29A	ISI	-	-	-	-	-	-	-	-	-	-	-	-
C5.50	W-10	ISI/UT/ISI-UT-1	PIPE TO VALVE (M0-4230)	AUG	-	-	-	-	-	-	-	-	-	-	-	-
2	RBCCW			OWN	-	-	-	-	-	-	-	-	-	-	-	-
				PRE	-	-	-	-	-	-	-	-	-	-	-	-
C-F-2	106011	ISI/MT/ISI-MT-1	ISI-13142-29A	ISI	-	-	-	-	-	-	-	-	-	-	-	-
C5.50	W-11	ISI/UT/ISI-UT-1	VALVE (M0-42229) TO PIPE	AUG	-	-	-	-	-	-	-	-	-	-	-	-
2	RBCCW			OWN	-	-	-	-	-	-	-	-	-	-	-	-
				PRE	-	-	-	-	-	-	-	-	-	-	-	-
C-F-2	106012	ISI/MT/ISI-MT-1	ISI-13142-29A	ISI	-	-	-	-	-	-	-	-	-	-	-	-
C5.50	W-12	ISI/UT/ISI-UT-1	PIPE TO ELBOW(90)	AUG	-	-	-	-	-	-	-	-	-	-	-	-
2	RBCCW			OWN	-	-	-	-	-	-	-	-	-	-	-	-
				PRE	-	-	-	-	-	-	-	-	-	-	-	-
C-F-2	106013	ISI/MT/ISI-MT-1	ISI-13142-29A	ISI	-	-	-	-	-	-	-	-	-	s	-	-
C5.50	W-13	ISI/UT/ISI-UT-1	ELBOW(90) TO PIPE	AUG	-	-	-	-	-	-	-	-	-	-	-	-
2	RBCCW			OWN	-	-	-	-	-	-	-	-	-	-	-	-
				PRE	-	-	-	-	-	-	-	-	-	-	-	-
C-F-2	106014	ISI/MT/ISI-MT-1	ISI-13142-29A	ISI	-	-	-	-	-	-	-	-	-	-	-	-
C5.50	W-14	ISI/UT/ISI-UT-1	PIPE TO ELBOW(90)	AUG	-	-	-	-	-	-	-	-	-	-	-	-
2	RBCCW			OWN	-	-	-	-	-	-	-	-	-	-	-	-
				PRE	-	-	-	-	-	-	-	-	-	-	-	-
C-F-2	106015	ISI/MT/ISI-MT-1	ISI-13142-29A	ISI	-	-	-	-	-	-	-	-	-	-	-	-
C5.50	W-5	ISI/UT/ISI-UT-1	ELBOW(90) TO PIPE	AUG	-	-	-	-	-	-	-	-	-	-	-	-
2	RBCCW			OWN	-	-	-	-	-	-	-	-	-	-	-	-
				PRE	-	-	-	-	-	-	-	-	-	-	-	-

MONTICELLO Nuclear Generating Plant
3rd Interval ISI Plan Rev. 3 June 1, 1992 to May 31, 2002

Category, ItemNO, Class	Summary / CompID / System	Scope / Method / Procedure	Iso No. Comp. Desc. Code Case /Note		Period 1				Period 2				Period 3			
					1	2	3	4	1	2	3	4	1	2	3	4
B-J	105028	ISI/MT/ISI-MT-1	ISI-782A	ISI	-	-	-	-	-	C	-	-	-	-	-	-
B9.40	W-17C		Pipe-to-Elbow	AUG	-	-	-	-	-	-	-	-	-	-	-	-
1	Head Vent			OWN	-	-	-	-	-	-	-	-	-	-	-	-
				PRE	-	-	-	-	-	-	-	-	-	-	-	-
B-J	105029	ISI/MT/ISI-MT-1	ISI-782A	ISI	-	-	-	-	-	C	-	-	-	-	-	-
B9.40	W-17D		Elbow-to-Pipe	AUG	-	-	-	-	-	-	-	-	-	-	-	-
1	Head Vent			OWN	-	-	-	-	-	-	-	-	-	-	-	-
				PRE	-	-	-	-	-	-	-	-	-	-	-	-
B-J	105030	ISI/MT/ISI-MT-1	ISI-786A	ISI	-	-	-	-	-	C	-	-	-	-	-	-
B9.21	W-8A		Pipe-to-Elbow	AUG	-	-	-	-	-	-	-	-	-	-	-	-
1	MS Condensate Lkoff			OWN	-	-	-	-	-	-	-	-	-	-	-	-
				PRE	-	-	-	-	-	-	-	-	-	-	-	-
F-B	105051	ISI/VT/ISI-VT-2.0	ISI-821A	ISI	-	-	-	-	-	C	-	-	-	-	-	-
F-A,B,C	H-8		Strut / Clamp	AUG	-	-	-	-	-	-	-	-	-	-	-	-
1	Bottom Head Drain			OWN	-	-	-	-	-	-	-	-	-	-	-	-
				PRE	-	-	-	-	-	-	-	-	-	-	-	-
F-B	105052	ISI/VT/ISI-VT-2.0	ISI-821A	ISI	-	-	-	-	-	C	-	-	-	-	-	-
F-A,B,C	H-9		Support	AUG	-	-	-	-	-	-	-	-	-	-	-	-
1	Bottom Head Drain			OWN	-	-	-	-	-	-	-	-	-	-	-	-
				PRE	-	-	-	-	-	-	-	-	-	-	-	-
C-F-2	106001		ISI-13142-29A	ISI	-	-	-	-	-	-	-	-		-	-	-
C5.50	W-1		PENETRATION X-24 TO PIPE	AUG	-	-	-	-	-	-	-	-	-	-	-	-
2	RBCCW	ISI/VT/ISI-VT-2.0		OWN	-	-	-	-	-	-	-	-	-	-	-	-
				PRE	-	-	-	-	-	-	-	-	-	-	-	-
C-F-2	106002		ISI-13142-29A	ISI	-	-	-	-	-	-	-	-		-	-	-
C5.50	W-2		PIPE TO VALVE (MO-1426)	AUG	-	-	-	-	-	-	-	-	-	-	-	-
2	RBCCW	ISI/VT/ISI-VT-2.0		OWN	-	-	-	-	-	-	-	-	-	-	-	-
				PRE	-	-	-	-	-	-	-	-	-	-	-	-
C-F-2	106003	ISI/UT/ISI-UT-1	ISI-13142-29A	ISI	-	-	-	-	-	-	-	-		-	-	-
C5.50	W-3	ISI/MT/ISI-MT-1	VALVE (MO-1426) TO PIPE	AUG	-	-	-	-	-	-	-	-	-	-	-	-
2	RBCCW			OWN	-	-	-	-	-	-	-	-	-	-	-	-
				PRE	-	-	-	-	-	-	-	-	-	-	-	-
C-F-2	106004	ISI/MT/ISI-MT-1	ISI-13142-29A	ISI	-	-	-	-	-	-	-	-		-	-	-
C5.50	W-7	ISI/UT/ISI-UT-1	ELBOW (90) TO PIPE	AUG	-	-	-	-	-	-	-	-	-	-	-	-
2	RBCCW			OWN	-	-	-	-	-	-	-	-	-	-	-	-
				PRE	-	-	-	-	-	-	-	-	-	-	-	-
C-F-2	106005		ISI-13142-29A	ISI	-	-	-	-	-	-	-	-	-	-	-	-
C5.50	W-4		PIPE TO ELBOW (90)	AUG	-	-	-	-	-	-	-	-	-	-	-	-
2	RBCCW			OWN	-	-	-	-	-	-	-	-	-	-	-	-
				PRE	-	-	-	-	-	-	-	-	-	-	-	-

MONTICELLO Nuclear Generating Plant
3rd Interval ISI Plan Rev. 3 June 1, 1992 to May 31, 2002

Category, ItemNO, Class	Summary / CompID / System	Scope / Method / Procedure	Iso No. Comp. Desc. Code Case /Note		Period 1				Period 2				Period 3			
					1	2	3	4	1	2	3	4	1	2	3	4
C-F-2	106026	ISI/MT/ISI-MT-1	ISI-94966-A	ISI	-	-	-	-	-	-	-	-	-	-	-	-
C5.51	W-5	ISI/UT/ISI-UT-1	PIPE TO TEE WELD	AUG	-	-	-	-	-	-	-	-	-	-	-	-
2	VACUUM RELIEF & CGCS OUTLET DIV. 1			OWN	-	-	-	-	-	-	-	-	-	-	-	-
				PRE	-	-	-	-	-	-	-	-	-	-	-	-
C-F-2	106027	ISI/MT/ISI-MT-1	ISI-94966-A	ISI	-	-	-	-	-	-	-	-	-	-	-	-
C5.51	W-6	ISI/UT/ISI-UT-1	TEE TO PIPE WELD	AUG	-	-	-	-	-	-	-	-	-	-	-	-
2	VACUUM RELIEF & CGCS OUTLET DIV. 1			OWN	-	-	-	-	-	-	-	-	-	-	-	-
				PRE	-	-	-	-	-	-	-	-	-	-	-	-
C-F-2	106028	ISI/MT/ISI-MT-1	ISI-94966-A	ISI	-	-	-	-	-	-	-	-	-	-	-	-
C5.51	W-7	ISI/UT/ISI-UT-1	PIPE TO REDUCER WELD	AUG	-	-	-	-	-	-	-	-	-	-	-	-
2	VACUUM RELIEF & CGCS OUTLET DIV. 1			OWN	-	-	-	-	-	-	-	-	-	-	-	-
				PRE	-	-	-	-	-	-	-	-	-	-	-	-
C-F-2	106029	ISI/MT/ISI-MT-1	ISI-94966-A	ISI	-	-	-	-	-	-	-	-	-	-	-	-
C5.51	W-8	ISI/UT/ISI-UT-1	PIPE TO ELBOW WELD	AUG	-	-	-	-	-	-	-	-	-	-	-	-
2	VACUUM RELIEF & CGCS OUTLET DIV. 1			OWN	-	-	-	-	-	-	-	-	-	-	-	-
				PRE	-	-	-	-	-	-	-	-	-	-	-	-
C-F-2	106030	ISI/MT/ISI-MT-1	ISI-94966-A	ISI	-	-	-	-	-	-	-	-	-	-	-	-
C5.51	W-9	ISI/UT/ISI-UT-1	ELBOW TO PIPE WELD	AUG	-	-	-	-	-	-	-	-	-	-	-	-
2	VACUUM RELIEF & CGCS OUTLET DIV. 1			OWN	-	-	-	-	-	-	-	-	-	-	-	-
				PRE	-	-	-	-	-	-	-	-	-	-	-	-
C-F-2	106031	ISI/MT/ISI-MT-1	ISI-94966-A	ISI	-	-	-	-	-	-	-	-	-	-	-	-
C5.51	W-10	ISI/UT/ISI-UT-1	PIPE TO PENETRATION X-218 WELD	AUG	-	-	-	-	-	-	-	-	-	-	-	-
2	VACUUM RELIEF & CGCS OUTLET DIV. 1			OWN	-	-	-	-	-	-	-	-	-	-	-	-
				PRE	-	-	-	-	-	-	-	-	-	-	-	-
C-F-2	106032	ISI/MT/ISI-MT-1	ISI-94966-A	ISI	-	-	-	-	-	-	-	-	-	s	-	-
C5.51	W-11	ISI/UT/ISI-UT-1	TEE TO PIPE WELD	AUG	-	-	-	-	-	-	-	-	-	-	-	-
2	VACUUM RELIEF & CGCS OUTLET DIV. 1			OWN	-	-	-	-	-	-	-	-	-	-	-	-
				PRE	-	-	-	-	-	-	-	-	-	-	-	-
C-F-2	106033	ISI/MT/ISI-MT-1	ISI-94966-A	ISI	-	-	-	-	-	-	-	-	-	-	-	-
C5.51	W-12	ISI/UT/ISI-UT-1	PIPE TO VALVE (A0-2380) WELD	AUG	-	-	-	-	-	-	-	-	-	-	-	-
2	VACUUM RELIEF & CGCS OUTLET DIV. 1			OWN	-	-	-	-	-	-	-	-	-	-	-	-
				PRE	-	-	-	-	-	-	-	-	-	-	-	-
C-F-2	106034	ISI/MT/ISI-MT-1	ISI-94966-A	ISI	-	-	-	-	-	-	-	-	-	-	-	-
C5.51	W-13	ISI/UT/ISI-UT-1	VALVE (A0-2378) TO ELBOW WELD	AUG	-	-	-	-	-	-	-	-	-	-	-	-
2	VACUUM RELIEF & CGCS OUTLET DIV. 1			OWN	-	-	-	-	-	-	-	-	-	-	-	-
				PRE	-	-	-	-	-	-	-	-	-	-	-	-
C-F-2	106035	ISI/MT/ISI-MT-1	ISI-94966-A	ISI	-	-	-	-	-	-	-	-	-	-	-	-
C5.51	W-14	ISI/UT/ISI-UT-1	ELBOW TO PIPE WELD	AUG	-	-	-	-	-	-	-	-	-	-	-	-
2	VACUUM RELIEF & CGCS OUTLET DIV. 1			OWN	-	-	-	-	-	-	-	-	-	-	-	-
				PRE	-	-	-	-	-	-	-	-	-	-	-	-

MONTICELLO Nuclear Generating Plant
3rd Interval ISI Plan Rev. 3 June 1, 1992 to May 31, 2002

Category, ItemNO, Class	Summary / CompID / System	Scope / Method / Procedure	Iso No. Comp. Desc. Code Case /Note		Period 1				Period 2				Period 3			
					1	2	3	4	1	2	3	4	1	2	3	4
C-F-2	106016	ISI/MT/ISI-MT-1	ISI-13142-29A	ISI	-	-	-	-	-	-	-	-	-	-	-	-
C5.50	W-16	ISI/UT/ISI-UT-1	PIPE TO VALVE (RBCC-15)	AUG	-	-	-	-	-	-	-	-	-	-	-	-
2	RBCCW			OWN	-	-	-	-	-	-	-	-	-	-	-	-
				PRE	-	-	-	-	-	-	-	-	-	-	-	-
C-F-2	106017	ISI/MT/ISI-MT-1	ISI-13142-29A	ISI	-	-	-	-	-	-	-	-	-	-	-	-
C5.50	W-17	ISI/RT/ISI-UT-1	VALVE (RBCC-15) TO PIPE	AUG	-	-	-	-	-	-	-	-	-	-	-	-
2	RBCCW			OWN	-	-	-	-	-	-	-	-	-	-	-	-
				PRE	-	-	-	-	-	-	-	-	-	-	-	-
C-F-2	106018	ISI/MT/ISI-MT-1	ISI-13142-29A	ISI	-	-	-	-	-	-	-	-	-	-	-	-
C5.50	W-18	ISI/UT/ISI-UT-1	PIPE TO PENETRATION X-23	AUG	-	-	-	-	-	-	-	-	-	-	-	-
2	RBCCW			OWN	-	-	-	-	-	-	-	-	-	-	-	-
				PRE	-	-	-	-	-	-	-	-	-	-	-	-
C-C	106019	ISI/MT/ISI-MT-1	ISI-13142-29A	ISI	-	-	-	-	-	-	-	-	-	s	-	-
C3.20	H-1	ISI/VT/ISI-VT-2.0	SPRING/4 LUGS	AUG	-	-	-	-	-	-	-	-	-	-	-	-
2	RBCCW			OWN	-	-	-	-	-	-	-	-	-	-	-	-
				PRE	-	-	-	-	-	-	-	-	-	-	-	-
F-C	106020	ISI/VT/ISI-VT-2.0	ISI-13142-29A	ISI	-	-	-	-	-	-	-	-	-	s	-	-
F-A,B,C	H-1		SPRING/4 LUGS	AUG	-	-	-	-	-	-	-	-	-	-	-	-
2	RBCCW			OWN	-	-	-	-	-	-	-	-	-	-	-	-
				PRE	-	-	-	-	-	-	-	-	-	-	-	-
C-F-2	106021		isi-13142-62	ISI	-	-	-	-	-	-	-	-	-	-	-	-
CX.XX	W-26		PIPE TO REDUCER	AUG	-	-	-	-	-	-	-	-	-	-	-	-
2	FUEL POOL EMERGENCY COOLING			OWN	-	-	-	-	-	-	-	-	-	-	-	-
				PRE	-	-	-	-	-	-	-	-	-	-	-	-
C-F-2	106022	ISI/PT/ISI-PT-1	ISI-94966-A	ISI	-	-	-	-	-	-	-	-	-	-	-	-
C5.51	W-1	ISI/UT/ISI-UT-1	WELD TO VALVE (A0-2379)	AUG	-	-	-	-	-	-	-	-	-	-	-	-
2	VACUUM RELIEF & CGCS OUTLET DIV. 1			OWN	-	-	-	-	-	-	-	-	-	-	-	-
				PRE	-	-	-	-	-	-	-	-	-	-	-	-
C-F-2	106023	ISI/MT/ISI-MT-1	ISI-94966-A	ISI	-	-	-	-	-	-	-	-	-	-	-	-
C5.51	W-2	ISI/UT/ISI-UT-1	ELBOW TO PIPE WELD	AUG	-	-	-	-	-	-	-	-	-	-	-	-
2	VACUUM RELIEF & CGCS OUTLET DIV. 1			OWN	-	-	-	-	-	-	-	-	-	-	-	-
				PRE	-	-	-	-	-	-	-	-	-	-	-	-
C-F-2	106024	ISI/MT/ISI-MT-1	ISI-94966-A	ISI	-	-	-	-	-	-	-	-	-	-	-	-
C5.51	W-3	ISI/UT/ISI-UT-1	PIPE TO TEE WELD	AUG	-	-	-	-	-	-	-	-	-	-	-	-
2	VACUUM RELIEF & CGCS OUTLET DIV. 1			OWN	-	-	-	-	-	-	-	-	-	-	-	-
				PRE	-	-	-	-	-	-	-	-	-	-	-	-
C-F-2	106025	ISI/MT/ISI-MT-1	ISI-94966-A	ISI	-	-	-	-	-	-	-	-	-	-	-	-
C5.51	W-4	ISI/UT/ISI-UT-1	TEE TO PIPE WELD	AUG	-	-	-	-	-	-	-	-	-	-	-	-
2	VACUUM RELIEF & CGCS OUTLET DIV. 1			OWN	-	-	-	-	-	-	-	-	-	-	-	-
				PRE	-	-	-	-	-	-	-	-	-	-	-	-

MONTICELLO Nuclear Generating Plant
3rd Interval ISI Plan Rev. 3 June 1, 1992 to May 31, 2002

Category, ItemNO, Class	Summary / CompID / System	Scope / Method / Procedure	Iso No. Comp. Desc. Code Case /Note		Period 1				Period 2				Period 3			
					1	2	3	4	1	2	3	4	1	2	3	4
F-B	106046		ISI-94966-A	ISI	-	-	-	-	-	-	-	-	-	s	-	-
F-A,B,C	H-6		DOUBLE STRUT U-BOLT	AUG	-	-	-	-	-	-	-	-	-	-	-	-
2	VACUUM RELIEF & CGCS OUTLET DIV. 1	ISI/VT/ISI-VT-2.0		OWN	-	-	-	-	-	-	-	-	-	-	-	-
				PRE	-	-	-	-	-	-	-	-	-	-	-	-
C-F-2	106047	ISI/MT/ISI-MT-1	ISI-94966-B	ISI	-	-	-	-	-	-	-	-	-	-	-	-
C5.51	W-1	ISI/UT/ISI-UT-1	VALVE (AO-2381) TO PIPE WELD	AUG	-	-	-	-	-	-	-	-	-	-	-	-
2	CONTAINMENT AIR PURGE			OWN	-	-	-	-	-	-	-	-	-	-	-	-
				PRE	-	-	-	-	-	-	-	-	-	-	-	-
C-F-2	106048	ISI/MT/ISI-MT-1	ISI-94966-B	ISI	-	-	-	-	-	-	-	-	-	-	-	-
C5.51	W-2	ISI/UT/ISI-UT-1	PIPE TO ELBOW WELD	AUG	-	-	-	-	-	-	-	-	-	-	-	-
2	CONTAINMENT AIR PURGE			OWN	-	-	-	-	-	-	-	-	-	-	-	-
				PRE	-	-	-	-	-	-	-	-	-	-	-	-
C-F-2	106049	ISI/MT/ISI-MT-1	ISI-94966-B	ISI	-	-	-	-	-	-	-	-	-	s	-	-
C5.51	W-3	ISI/UT/ISI-UT-1	ELBOW TO PIPE WELD	AUG	-	-	-	-	-	-	-	-	-	-	-	-
2	CONTAINMENT AIR PURGE			OWN	-	-	-	-	-	-	-	-	-	-	-	-
				PRE	-	-	-	-	-	-	-	-	-	-	-	-
C-F-2	106050	ISI/MT/ISI-MT-1	ISI-94966-B	ISI	-	-	-	-	-	-	-	-	-	-	-	-
C5.51	W-4	ISI/UT/ISI-UT-1	PIPETO PIPE WELD	AUG	-	-	-	-	-	-	-	-	-	-	-	-
2	CONTAINMENT AIR PURGE			OWN	-	-	-	-	-	-	-	-	-	-	-	-
				PRE	-	-	-	-	-	-	-	-	-	-	-	-
C-F-2	106051	ISI/MT/ISI-MT-1	ISI-94966-B	ISI	-	-	-	-	-	-	-	-	-	-	-	-
C5.51	W-5	ISI/UT/ISI-UT-1	PIPE TO PENETRATION X-26 WELD	AUG	-	-	-	-	-	-	-	-	-	-	-	-
2	CONTAINMENT AIR PURGE			OWN	-	-	-	-	-	-	-	-	-	-	-	-
				PRE	-	-	-	-	-	-	-	-	-	-	-	-
F-B	106052		ISI-94966-B	ISI	-	-	-	-	-	-	-	-	-	s	-	-
F-A,B,C	H-1		DOUBLE STRUT-U BOLT	AUG	-	-	-	-	-	-	-	-	-	-	-	-
2	CONTAINMENT AIR PURGE	ISI/VT/ISI-VT-2.0		OWN	-	-	-	-	-	-	-	-	-	-	-	-
				PRE	-	-	-	-	-	-	-	-	-	-	-	-
F-B	106053		ISI-94966-B	ISI	-	-	-	-	-	-	-	-	-	-	-	-
F-A,B,C	H-2		SINGLE STRUT CLAMP	AUG	-	-	-	-	-	-	-	-	-	-	-	-
2	CONTAINMENT AIR PURGE	ISI/VT/ISI-VT-2.0		OWN	-	-	-	-	-	-	-	-	-	-	-	-
				PRE	-	-	-	-	-	-	-	-	-	-	-	-
C-F-2	106054	ISI/MT/ISI-MT-1	ISI-94699-A	ISI	-	-	-	-	-	-	-	-	-	-	-	-
C5.51	W-1	ISI/UT/ISI-UT-1	PENETRATION X-205 TO PIPE WELD	AUG	-	-	-	-	-	-	-	-	-	-	-	-
2	CGCS OUTLET DIV 2			OWN	-	-	-	-	-	-	-	-	-	-	-	-
				PRE	-	-	-	-	-	-	-	-	-	-	-	-
C-F-2	106055	ISI/MT/ISI-MT-1	ISI-94699-A	ISI	-	-	-	-	-	-	-	-	-	-	-	-
C5.51	W-2	ISI/UT/ISI-UT-1	PIPE TO ELBOW WELD	AUG	-	-	-	-	-	-	-	-	-	-	-	-
2	CGCS OUTLET DIV 2			OWN	-	-	-	-	-	-	-	-	-	-	-	-
				PRE	-	-	-	-	-	-	-	-	-	-	-	-

MONTICELLO Nuclear Generating Plant
3rd Interval ISI Plan Rev. 3 June 1, 1992 to May 31, 2002

Category, ItemNO, Class	Summary / CompID / System	Scope / Method / Procedure	Iso No. Comp. Desc. Code Case /Note		Period 1				Period 2				Period 3			
					1	2	3	4	1	2	3	4	1	2	3	4
C-F-2	106036	ISI/MT/ISI-MT-1	ISI-94966-A	ISI	-	-	-	-	-	-	-	-	-	-	-	-
C5.51	W-15	ISI/UT/ISI-UT-1	PIPE TO TEE WELD	AUG	-	-	-	-	-	-	-	-	-	-	-	-
2	VACUUM RELIEF & CGCS OUTLET DIV. 1			OWN	-	-	-	-	-	-	-	-	-	-	-	-
				PRE	-	-	-	-	-	-	-	-	-	-	-	-
C-F-2	106037	ISI/MT/ISI-MT-1	ISI-94966-A	ISI	-	-	-	-	-	-	-	-	-	-	-	-
C5.51	W-16	ISI/UT/ISI-UT-1	VALVE (AO-7424A) TO PIPE WELD	AUG	-	-	-	-	-	-	-	-	-	-	-	-
2	VACUUM RELIEF & CGCS OUTLET DIV. 1			OWN	-	-	-	-	-	-	-	-	-	-	-	-
				PRE	-	-	-	-	-	-	-	-	-	-	-	-
C-F-2	106038	ISI/MT/ISI-MT-1	ISI-94966-A	ISI	-	-	-	-	-	-	-	-	-	-	-	-
C5.51	W-17	ISI/UT/ISI-UT-1	PIPE TO ELBOW WELD	AUG	-	-	-	-	-	-	-	-	-	-	-	-
2	VACUUM RELIEF & CGCS OUTLET DIV. 1			OWN	-	-	-	-	-	-	-	-	-	-	-	-
				PRE	-	-	-	-	-	-	-	-	-	-	-	-
C-F-2	106039	ISI/MT/ISI-MT-1	ISI-94966-A	ISI	-	-	-	-	-	-	-	-	-	-	-	-
C5.51	W-18	ISI/UT/ISI-UT-1	ELBOW TO PIPE WELD	AUG	-	-	-	-	-	-	-	-	-	-	-	-
2	VACUUM RELIEF & CGCS OUTLET DIV. 1			OWN	-	-	-	-	-	-	-	-	-	-	-	-
				PRE	-	-	-	-	-	-	-	-	-	-	-	-
C-F-2	106040	ISI/MT/ISI-MT-1	ISI-94966-A	ISI	-	-	-	-	-	-	-	-	-	-	-	-
C5.51	W-19	ISI/UT/ISI-UT-1	PIPE TO REDUCER WELD	AUG	-	-	-	-	-	-	-	-	-	-	-	-
2	VACUUM RELIEF & CGCS OUTLET DIV. 1			OWN	-	-	-	-	-	-	-	-	-	-	-	-
				PRE	-	-	-	-	-	-	-	-	-	-	-	-
F-B	106041	ISI/VT/ISI-VT-2.0	ISI-94966-A	ISI	-	-	-	-	-	-	-	-	-	-	-	-
F-A,B,C	H-1		DOUBLE RIGID STRUT	AUG	-	-	-	-	-	-	-	-	-	-	-	-
2	VACUUM RELIEF & CGCS OUTLET DIV. 1			OWN	-	-	-	-	-	-	-	-	-	-	-	-
				PRE	-	-	-	-	-	-	-	-	-	-	-	-
F-B	106042	ISI/VT/ISI-VT-2.0	ISI-94966-A	ISI	-	-	-	-	-	-	-	-	-	-	-	-
F-A,B,C	H-2		SNUBBER -CLAMP	AUG	-	-	-	-	-	-	-	-	-	-	-	-
2	VACUUM RELIEF & CGCS OUTLET DIV. 1			OWN	-	-	-	-	-	-	-	-	-	-	-	-
				PRE	-	-	-	-	-	-	-	-	-	-	-	-
F-B	106043	ISI/VT/ISI-VT-2.0	ISI-94966-A	ISI	-	-	-	-	-	-	-	-	-	s	-	-
F-A,B,C	H-3		DOUBLE SPRING-U BOLT	AUG	-	-	-	-	-	-	-	-	-	-	-	-
2	VACUUM RELIEF & CGCS OUTLET DIV. 1			OWN	-	-	-	-	-	-	-	-	-	-	-	-
				PRE	-	-	-	-	-	-	-	-	-	-	-	-
F-B	106044	ISI/VT/ISI-VT-2.0	ISI-94966-A	ISI	-	-	-	-	-	-	-	-	-	-	-	-
F-A,B,C	H-4		SNUBBER -CLAMP	AUG	-	-	-	-	-	-	-	-	-	-	-	-
2	VACUUM RELIEF & CGCS OUTLET DIV. 1			OWN	-	-	-	-	-	-	-	-	-	-	-	-
				PRE	-	-	-	-	-	-	-	-	-	-	-	-
F-B	106045		ISI-94966-A	ISI	-	-	-	-	-	-	-	-	-	-	-	-
F-A,B,C	H-5		SNUBBER -CLAMP	AUG	-	-	-	-	-	-	-	-	-	-	-	-
2	VACUUM RELIEF & CGCS OUTLET DIV. 1	ISI/VT/ISI-VT-2.0		OWN	-	-	-	-	-	-	-	-	-	-	-	-
				PRE	-	-	-	-	-	-	-	-	-	-	-	-

MONTICELLO Nuclear Generating Plant
3rd Interval ISI Plan Rev. 3 June 1, 1992 to May 31, 2002

Category, ItemNO, Class	Summary / CompID / System	Scope / Method / Procedure	Iso No. Comp. Desc. Code Case /Note		Period 1				Period 2				Period 3			
					1	2	3	4	1	2	3	4	1	2	3	4
C-F-2	106067	ISI/MT/ISI-MT-1	ISI-94879-A	ISI	-	-	-	-	-	-	-	-	-	-	-	-
C5.51	W-2	ISI/UT/ISI-UT-1	PIPE TO 45 ELBOW WELD	AUG	-	-	-	-	-	-	-	-	-	-	-	-
2	CGCS INLET DIV 1 & 2			OWN	-	-	-	-	-	-	-	-	-	-	-	-
				PRE	-	-	-	-	-	-	-	-	-	-	-	-
C-F-2	106068	ISI/MT/ISI-MT-1	ISI-94879-A	ISI	-	-	-	-	-	-	-	-	-	-	-	-
C5.51	W-3	ISI/UT/ISI-UT-1	ELBOW TO PIPE WELD	AUG	-	-	-	-	-	-	-	-	-	-	-	-
2	CGCS INLET DIV 1 & 2			OWN	-	-	-	-	-	-	-	-	-	-	-	-
				PRE	-	-	-	-	-	-	-	-	-	-	-	-
C-F-2	106069	ISI/MT/ISI-MT-1	ISI-94879-A	ISI	-	-	-	-	-	-	-	-	-	s	-	-
C5.51	W-4	ISI/UT/ISI-UT-1	PIPE TO REDUCER WELD	AUG	-	-	-	-	-	-	-	-	-	-	-	-
2	CGCS INLET DIV 1 & 2			OWN	-	-	-	-	-	-	-	-	-	-	-	-
				PRE	-	-	-	-	-	-	-	-	-	-	-	-
C-F-2	106070	ISI/MT/ISI-MT-1	ISI-94879-A	ISI	-	-	-	-	-	-	-	-	-	-	-	-
C5.51	W-5	ISI/UT/ISI-UT-1	REDUCER TO PIPE WELD	AUG	-	-	-	-	-	-	-	-	-	-	-	-
2	CGCS INLET DIV 1 & 2			OWN	-	-	-	-	-	-	-	-	-	-	-	-
				PRE	-	-	-	-	-	-	-	-	-	-	-	-
C-F-2	106071	ISI/MT/ISI-MT-1	ISI-105531-A	ISI	-	-	-	-	-	-	-	-	-	-	-	-
C5.51	W-1	ISI/UT/ISI-UT-1	PENETRATION X-25 TO PIPE WELD	AUG	-	-	-	-	-	-	-	-	-	-	-	-
2	STANDBY GAS TRTMNT & RX PLENUM			OWN	-	-	-	-	-	-	-	-	-	-	-	-
				PRE	-	-	-	-	-	-	-	-	-	-	-	-
C-F-2	106072	ISI/MT/ISI-MT-1	ISI-105531-A	ISI	-	-	-	-	-	-	-	-	-	s	-	-
C5.51	W-2	ISI/UT/ISI-UT-1	PIPE TO 90 ELBOW WELD	AUG	-	-	-	-	-	-	-	-	-	-	-	-
2	STANDBY GAS TRTMNT & RX PLENUM			OWN	-	-	-	-	-	-	-	-	-	-	-	-
				PRE	-	-	-	-	-	-	-	-	-	-	-	-
C-F-2	106073	ISI/MT/ISI-MT-1	ISI-105531-A	ISI	-	-	-	-	-	-	-	-	-	-	-	-
C5.51	W-3	ISI/UT/ISI-UT-1	90 ELBOW TO PIPE WELD	AUG	-	-	-	-	-	-	-	-	-	-	-	-
2	STANDBY GAS TRTMNT & RX PLENUM			OWN	-	-	-	-	-	-	-	-	-	-	-	-
				PRE	-	-	-	-	-	-	-	-	-	-	-	-
C-F-2	106074	ISI/MT/ISI-MT-1	ISI-105531-A	ISI	-	-	-	-	-	-	-	-	-	-	-	-
C5.51	W-4	ISI/UT/ISI-UT-1	PIPE TO 90 ELBOW WELD	AUG	-	-	-	-	-	-	-	-	-	-	-	-
2	STANDBY GAS TRTMNT & RX PLENUM			OWN	-	-	-	-	-	-	-	-	-	-	-	-
				PRE	-	-	-	-	-	-	-	-	-	-	-	-
C-F-2	106075	ISI/MT/ISI-MT-1	ISI-105531-A	ISI	-	-	-	-	-	-	-	-	-	-	-	-
C5.51	W-5	ISI/UT/ISI-UT-1	90 ELBOW TO PIPE WELD	AUG	-	-	-	-	-	-	-	-	-	-	-	-
2	STANDBY GAS TRTMNT & RX PLENUM			OWN	-	-	-	-	-	-	-	-	-	-	-	-
				PRE	-	-	-	-	-	-	-	-	-	-	-	-
C-F-2	106076	ISI/MT/ISI-MT-1	ISI-105531-A	ISI	-	-	-	-	-	-	-	-	-	-	-	-
C5.51	W-6	ISI/UT/ISI-UT-1	PIPE TO VALVE (AO-2386) WELD	AUG	-	-	-	-	-	-	-	-	-	-	-	-
2	STANDBY GAS TRTMNT & RX PLENUM			OWN	-	-	-	-	-	-	-	-	-	-	-	-
				PRE	-	-	-	-	-	-	-	-	-	-	-	-

MONTICELLO Nuclear Generating Plant
3rd Interval ISI Plan Rev. 3 June 1, 1992 to May 31, 2002

Category, ItemNO, Class	Summary / CompID / System	Scope / Method / Procedure	Iso No. Comp. Desc. Code Case /Note		Period 1				Period 2				Period 3			
					1	2	3	4	1	2	3	4	1	2	3	4
C-F-2	106056	ISI/MT/ISI-MT-1	ISI-94699-A	ISI	-	-	-	-	-	-	-	-	-	s	-	-
C5.51	W-3	ISI/UT/ISI-UT-1	ELBOW TO REDUCER WELD	AUG	-	-	-	-	-	-	-	-	-	-	-	-
2	CGCS OUTLET DIV 2			OWN	-	-	-	-	-	-	-	-	-	-	-	-
				PRE	-	-	-	-	-	-	-	-	-	-	-	-
C-F-2	106057	ISI/MT/ISI-MT-1	ISI-94699-A	ISI	-	-	-	-	-	-	-	-	-	-	-	-
C5.51	W-4	ISI/UT/ISI-UT-1	REDUCER TO PIPE WELD	AUG	-	-	-	-	-	-	-	-	-	-	-	-
2	CGCS OUTLET DIV 2			OWN	-	-	-	-	-	-	-	-	-	-	-	-
				PRE	-	-	-	-	-	-	-	-	-	-	-	-
C-F-2	106058	ISI/MT/ISI-MT-1	ISI-94699-A	ISI	-	-	-	-	-	-	-	-	-	-	-	-
C5.51	W-5	ISI/UT/ISI-UT-1	PIPE TO 6" FITTING WELD	AUG	-	-	-	-	-	-	-	-	-	-	-	-
2	CGCS OUTLET DIV 2			OWN	-	-	-	-	-	-	-	-	-	-	-	-
				PRE	-	-	-	-	-	-	-	-	-	-	-	-
C-F-2	106059	ISI/MT/ISI-MT-1	ISI-94699-A	ISI	-	-	-	-	-	-	-	-	-	-	-	-
C5.51	W-6	ISI/UT/ISI-UT-1	PIPE TO 45 ELBOW WELD	AUG	-	-	-	-	-	-	-	-	-	-	-	-
2	CGCS OUTLET DIV 2			OWN	-	-	-	-	-	-	-	-	-	-	-	-
				PRE	-	-	-	-	-	-	-	-	-	-	-	-
C-F-2	106060	ISI/MT/ISI-MT-1	ISI-94699-A	ISI	-	-	-	-	-	-	-	-	-	-	-	-
C5.51	W-7	ISI/UT/ISI-UT-1	45 ELBOW TO VALVE (AO-2383) WELD	AUG	-	-	-	-	-	-	-	-	-	-	-	-
2	CGCS OUTLET DIV 2			OWN	-	-	-	-	-	-	-	-	-	-	-	-
				PRE	-	-	-	-	-	-	-	-	-	-	-	-
C-F-2	106061	ISI/MT/ISI-MT-1	ISI-94699-A	ISI	-	-	-	-	-	-	-	-	-	-	-	-
C5.51	W-8	ISI/UT/ISI-UT-1	6" FITTING TO PIPE WELD	AUG	-	-	-	-	-	-	-	-	-	-	-	-
2	CGCS OUTLET DIV 2			OWN	-	-	-	-	-	-	-	-	-	-	-	-
				PRE	-	-	-	-	-	-	-	-	-	-	-	-
C-F-2	106062	ISI/MT/ISI-MT-1	ISI-94699-A	ISI	-	-	-	-	-	-	-	-	-	-	-	-
C5.51	W-9	ISI/UT/ISI-UT-1	PIPE TO 90 ELBOW WELD	AUG	-	-	-	-	-	-	-	-	-	-	-	-
2	CGCS OUTLET DIV 2			OWN	-	-	-	-	-	-	-	-	-	-	-	-
				PRE	-	-	-	-	-	-	-	-	-	-	-	-
C-F-2	106063	ISI/MT/ISI-MT-1	ISI-94699-A	ISI	-	-	-	-	-	-	-	-	-	-	-	-
C5.51	W-10	ISI/UT/ISI-UT-1	WELD	AUG	-	-	-	-	-	-	-	-	-	-	-	-
2	CGCS OUTLET DIV 2			OWN	-	-	-	-	-	-	-	-	-	-	-	-
				PRE	-	-	-	-	-	-	-	-	-	-	-	-
F-B	106065		ISI-94699-A	ISI	-	-	-	-	-	-	-	-	-	-	-	-
F-A,B,C	H-1/H-2		DOUBLE SNUBBER	AUG	-	-	-	-	-	-	-	-	-	-	-	-
2	CGCS OUTLET DIV 2	ISI/VT/ISI-VT-2.0		OWN	-	-	-	-	-	-	-	-	-	-	-	-
				PRE	-	-	-	-	-	-	-	-	-	-	-	-
C-F-2	106066	ISI/MT/ISI-MT-1	ISI-94879-A	ISI	-	-	-	-	-	-	-	-	-	-	-	-
C5.51	W-1	ISI/UT/ISI-UT-1	PENETRATION X-205 TO PIPE WELD	AUG	-	-	-	-	-	-	-	-	-	-	-	-
2	CGCS INLET DIV 1 & 2			OWN	-	-	-	-	-	-	-	-	-	-	-	-
				PRE	-	-	-	-	-	-	-	-	-	-	-	-

MONTICELLO Nuclear Generating Plant
3rd Interval ISI Plan Rev. 3 June 1, 1992 to May 31, 2002

Category, ItemNO, Class	Summary / CompID / System	Scope / Method / Procedure	Iso No. Comp. Desc. Code Case /Note		Period 1				Period 2				Period 3			
					1	2	3	4	1	2	3	4	1	2	3	4
C-H	106600	ISI/VT2/0137-25	1.5-13 Boundary	ISI	-	-	-	-	-	-	-	-	-	s	-	-
C7.20	0137-25		Pressure Test 0137-25	AUG	-	-	-	-	-	-	-	-	-	-	-	-
2	CGCS DIV I			OWN	-	-	-	-	-	-	-	-	-	-	-	-
				PRE	-	-	-	-	-	-	-	-	-	-	-	-
C-H	106700	ISI/VT2/0137-24	1.5-13 Boundary	ISI	-	-	-	-	-	-	-	-	-	s	-	-
C7.20	0137-24		Pressure Test 0137-24	AUG	-	-	-	-	-	-	-	-	-	-	-	-
2	STANDBY GAS TREATMENT			OWN	-	-	-	-	-	-	-	-	-	-	-	-
				PRE	-	-	-	-	-	-	-	-	-	-	-	-
C-H	106800	ISI/VT2/0137-24	1.5-13 Boundary	ISI	-	-	-	-	-	-	-	-	-	s	-	-
C7.20	0137-024		Pressure Test 0137-24	AUG	-	-	-	-	-	-	-	-	-	-	-	-
2	Hard Pipe Vent			OWN	-	-	-	-	-	-	-	-	-	-	-	-
				PRE	-	-	-	-	-	-	-	-	-	-	-	-

MONTICELLO Nuclear Generating Plant
3rd Interval ISI Plan Rev. 3 June 1, 1992 to May 31, 2002

Category, ItemNO, Class	Summary / CompID / System	Scope / Method / Procedure	Iso No. Comp. Desc. Code Case /Note		Period 1				Period 2				Period 3			
					1	2	3	4	1	2	3	4	1	2	3	4
F-B	106097		ISI-158074-A	ISI	-	-	-	-	-	-	-	-	-	S	-	-
F-A,B,C	H-1		HANGER	AUG	-	-	-	-	-	-	-	-	-	-	-	-
2	TORUS HPV	ISI/VT/ISI-VT-2.0		OWN	-	-	-	-	-	-	-	-	-	-	-	-
				PRE	-	-	-	-	-	-	-	-	-	-	-	-
F-B	106098		NGS-00Q015-03	ISI	-	-	-	-	-	-	-	-	S	-	-	-
F-A,B,C	SR-904		STRUT/ CLAMP	AUG	-	-	-	-	-	-	-	-	-	-	-	-
3	RHR SERVICE WATER	ISI/VT/ISI-VT-2.0		OWN	-	-	-	-	-	-	-	-	-	-	-	-
				PRE	-	-	-	-	-	-	-	-	-	-	-	-
F-B	106099	ISI/VT/ISI-VT-2.0	NGS-00Q015-02	ISI	-	-	-	-	-	-	-	-	S	-	-	-
F-A,B,C	SR-903		BEAM/PLATE	AUG	-	-	-	-	-	-	-	-	-	-	-	-
3	RHR SERVICE WATER			OWN	-	-	-	-	-	-	-	-	-	-	-	-
				PRE	-	-	-	-	-	-	-	-	-	-	-	-
F-B	106100	ISI/VT/ISI-VT-2.0	NGS-00Q15-03	ISI	-	-	-	-	-	-	-	-	S	-	-	-
F-A,B,C	SR-902		SUPPORT PLATE	AUG	-	-	-	-	-	-	-	-	-	-	-	-
3	RHR SERVICE WATER			OWN	-	-	-	-	-	-	-	-	-	-	-	-
				PRE	-	-	-	-	-	-	-	-	-	-	-	-
F-B	106101	ISI/VT/ISI-VT-2.0	NGS-00Q015-03	ISI	-	-	-	-	-	-	-	-	S	-	-	-
F-A,B,C	SR-901		BEAM / PLATE	AUG	-	-	-	-	-	-	-	-	-	-	-	-
3	RHR SERVICE WATER			OWN	-	-	-	-	-	-	-	-	-	-	-	-
				PRE	-	-	-	-	-	-	-	-	-	-	-	-
F-B	106102	ISI/VT/ISI-VT-2.0	NGS-00Q015-03	ISI	-	-	-	-	-	-	-	-	S	-	-	-
F-A,B,C	SR-900		BEAM / PLATE	AUG	-	-	-	-	-	-	-	-	-	-	-	-
3	RHR SERVICE WATER			OWN	-	-	-	-	-	-	-	-	-	-	-	-
				PRE	-	-	-	-	-	-	-	-	-	-	-	-
C-H	106200	ISI/VT2/0137-31	1.5-21 Boundary	ISI	-	-	-	-	-	-	-	-	-	S	-	-
C7.20	0137-31		Pressure Test 0137-31	AUG	-	-	-	-	-	-	-	-	-	-	-	-
2	RBCCW			OWN	-	-	-	-	-	-	-	-	-	-	-	-
				PRE	-	-	-	-	-	-	-	-	-	-	-	-
C-H	106300	ISI/VT2/0137-04	1.5-13 Boundary	ISI	-	-	-	-	-	-	-	-	-	S	-	-
C7.20	0137-04		Pressure Test 0137-04	AUG	-	-	-	-	-	-	-	-	-	-	-	-
2	PRI. CONTAINMENT VAC. RELIEF			OWN	-	-	-	-	-	-	-	-	-	-	-	-
				PRE	-	-	-	-	-	-	-	-	-	-	-	-
C-H	106400	ISI/VT2/0137-04	1.5-13 Boundary	ISI	-	-	-	-	-	-	-	-	-	S	-	-
C7.20	0137-04		Pressure Test 0137-04	AUG	-	-	-	-	-	-	-	-	-	-	-	-
2	PRI. CONTAINMENT AIR PURGE SUPPLY			OWN	-	-	-	-	-	-	-	-	-	-	-	-
				PRE	-	-	-	-	-	-	-	-	-	-	-	-
C-H	106500	ISI/VT2/0137-24	1.5-13 Boundary	ISI	-	-	-	-	-	-	-	-	-	S	-	-
C7.20	0137-24		Pressure Test 0137-24	AUG	-	-	-	-	-	-	-	-	-	-	-	-
2	TORUS AIR PURGE SUPPLY			OWN	-	-	-	-	-	-	-	-	-	-	-	-
				PRE	-	-	-	-	-	-	-	-	-	-	-	-

MONTICELLO Nuclear Generating Plant
3rd Interval ISI Plan Rev. 3 June 1, 1992 to May 31, 2002

Category, ItemNO, Class	Summary / CompID / System	Scope / Method / Procedure	Iso No. Comp. Desc. Code Case /Note		Period 1				Period 2				Period 3			
					1	2	3	4	1	2	3	4	1	2	3	4
C-F-2	106087	ISI/MT/ISI-MT-1	ISI-158074-A	ISI	-	-	-	-	-	-	-	-	-	-	-	-
C5.51	W-10	ISI/UT/ISI-UT-1	PIPE TO 90 ELBOW WELD	AUG	-	-	-	-	-	-	-	-	-	-	-	-
2	TORUS HPV			OWN	-	-	-	-	-	-	-	-	-	-	-	-
				PRE	-	-	-	-	-	-	-	-	-	-	-	-
C-F-2	106088	ISI/MT/ISI-MT-1	ISI-158074-A	ISI	-	-	-	-	-	-	-	-	-	s	-	-
C5.51	W-11	ISI/UT/ISI-UT-1	90 ELBOW TO PIPE WELD	AUG	-	-	-	-	-	-	-	-	-	-	-	-
2	TORUS HPV			OWN	-	-	-	-	-	-	-	-	-	-	-	-
				PRE	-	-	-	-	-	-	-	-	-	-	-	-
C-F-2	106089	ISI/MT/ISI-MT-1	ISI-158074-A	ISI	-	-	-	-	-	-	-	-	-	-	-	-
C5.51	W-12	ISI/UT/ISI-UT-1	PIPE TO 90 ELBOW WELD	AUG	-	-	-	-	-	-	-	-	-	-	-	-
2	TORUS HPV			OWN	-	-	-	-	-	-	-	-	-	-	-	-
				PRE	-	-	-	-	-	-	-	-	-	-	-	-
C-F-2	106090	ISI/MT/ISI-MT-1	ISI-158074-A	ISI	-	-	-	-	-	-	-	-	-	-	-	-
C5.51	W-13	ISI/UT/ISI-UT-1	90 ELBOW TO PIPE WELD	AUG	-	-	-	-	-	-	-	-	-	-	-	-
2	TORUS HPV			OWN	-	-	-	-	-	-	-	-	-	-	-	-
				PRE	-	-	-	-	-	-	-	-	-	-	-	-
C-F-2	106091	ISI/MT/ISI-MT-1	ISI-158074-A	ISI	-	-	-	-	-	-	-	-	-	-	-	-
C5.51	W-14	ISI/UT/ISI-UT-1	PIPE TO 90 ELBOW WELD	AUG	-	-	-	-	-	-	-	-	-	-	-	-
2	TORUS HPV			OWN	-	-	-	-	-	-	-	-	-	-	-	-
				PRE	-	-	-	-	-	-	-	-	-	-	-	-
C-F-2	106092	ISI/MT/ISI-MT-1	ISI-158074-A	ISI	-	-	-	-	-	-	-	-	-	-	-	-
C5.51	W-15	ISI/UT/ISI-UT-1	90 ELBOW TO PIPE WELD	AUG	-	-	-	-	-	-	-	-	-	-	-	-
2	TORUS HPV			OWN	-	-	-	-	-	-	-	-	-	-	-	-
				PRE	-	-	-	-	-	-	-	-	-	-	-	-
C-F-2	106093	ISI/MT/ISI-MT-1	ISI-158074-A	ISI	-	-	-	-	-	-	-	-	-	-	-	-
C5.51	W-16	ISI/UT/ISI-UT-1	PIPE TO 90 ELBOW WELD	AUG	-	-	-	-	-	-	-	-	-	-	-	-
2	TORUS HPV			OWN	-	-	-	-	-	-	-	-	-	-	-	-
				PRE	-	-	-	-	-	-	-	-	-	-	-	-
C-F-2	106094	ISI/MT/ISI-MT-1	ISI-158074-A	ISI	-	-	-	-	-	-	-	-	-	-	-	-
C5.51	W-17	ISI/UT/ISI-UT-1	90 ELBOW TO PIPE WELD	AUG	-	-	-	-	-	-	-	-	-	-	-	-
2	TORUS HPV			OWN	-	-	-	-	-	-	-	-	-	-	-	-
				PRE	-	-	-	-	-	-	-	-	-	-	-	-
C-F-2	106095	ISI/MT/ISI-MT-1	ISI-158074-A	ISI	-	-	-	-	-	-	-	-	-	-	-	-
C5.51	W-18	ISI/UT/ISI-UT-1	90 ELBOW TO PIPE WELD	AUG	-	-	-	-	-	-	-	-	-	-	-	-
2	TORUS HPV			OWN	-	-	-	-	-	-	-	-	-	-	-	-
				PRE	-	-	-	-	-	-	-	-	-	-	-	-
C-F-2	106096	ISI/MT/ISI-MT-1	ISI-158074-A	ISI	-	-	-	-	-	-	-	-	-	-	-	-
C5.51	W-19	ISI/UT/ISI-UT-1	REDUCER TO PIPE WELD	AUG	-	-	-	-	-	-	-	-	-	-	-	-
2	TORUS HPV			OWN	-	-	-	-	-	-	-	-	-	-	-	-
				PRE	-	-	-	-	-	-	-	-	-	-	-	-

MONTICELLO Nuclear Generating Plant
3rd Interval ISI Plan Rev. 3 June 1, 1992 to May 31, 2002

Category, ItemNO, Class	Summary / CompID / System	Scope / Method / Procedure	Iso No. Comp. Desc. Code Case /Note		Period 1				Period 2				Period 3			
					1	2	3	4	1	2	3	4	1	2	3	4
F-B	106077	ISI/VT/ISI-VT-2.0	ISI-105531-A	ISI	-	-	-	-	-	-	-	-	-	s	-	-
F-A,B,C	H-1		BASE PLATE SUPPORT	AUG	-	-	-	-	-	-	-	-	-	-	-	-
2	STANDBY GAS TRTMNT & RX PLENUM			OWN	-	-	-	-	-	-	-	-	-	-	-	-
				PRE	-	-	-	-	-	-	-	-	-	-	-	-
C-F-2	106078	ISI/MT/ISI-MT-1	ISI-158074-A	ISI	-	-	-	-	-	-	-	-	-	-	-	-
C5.51	W-1	ISI/UT/ISI-UT-1	PENETRATION X-240 TO PIPE WELD	AUG	-	-	-	-	-	-	-	-	-	-	-	-
2	TORUS HPV			OWN	-	-	-	-	-	-	-	-	-	-	-	-
				PRE	-	-	-	-	-	-	-	-	-	-	-	-
C-F-2	106079	ISI/MT/ISI-MT-1	ISI-158074-A	ISI	-	-	-	-	-	-	-	-	-	-	-	-
C5.51	W-2	ISI/UT/ISI-UT-1	PIPE TO 90 ELBOW WELD	AUG	-	-	-	-	-	-	-	-	-	-	-	-
2	TORUS HPV			OWN	-	-	-	-	-	-	-	-	-	-	-	-
				PRE	-	-	-	-	-	-	-	-	-	-	-	-
C-F-2	106080	ISI/MT/ISI-MT-1	ISI-158074-A	ISI	-	-	-	-	-	-	-	-	-	-	-	-
C5.51	W-3	ISI/UT/ISI-UT-1	90 ELBOW TO PIPE WELD	AUG	-	-	-	-	-	-	-	-	-	-	-	-
2	TORUS HPV			OWN	-	-	-	-	-	-	-	-	-	-	-	-
				PRE	-	-	-	-	-	-	-	-	-	-	-	-
C-F-2	106081	ISI/MT/ISI-MT-1	ISI-158074-A	ISI	-	-	-	-	-	-	-	-	-	-	-	-
C5.51	W-4	ISI/UT/ISI-UT-1	PIPE TO 45 ELBOW WELD	AUG	-	-	-	-	-	-	-	-	-	-	-	-
2	TORUS HPV			OWN	-	-	-	-	-	-	-	-	-	-	-	-
				PRE	-	-	-	-	-	-	-	-	-	-	-	-
C-F-2	106082	ISI/MT/ISI-MT-1	ISI-158074-A	ISI	-	-	-	-	-	-	-	-	-	-	-	-
C5.51	W-5	ISI/UT/ISI-UT-1	45 ELBOW TO PIPE WELD	AUG	-	-	-	-	-	-	-	-	-	-	-	-
2	TORUS HPV			OWN	-	-	-	-	-	-	-	-	-	-	-	-
				PRE	-	-	-	-	-	-	-	-	-	-	-	-
C-F-2	106083	ISI/MT/ISI-MT-1	ISI-158074-A	ISI	-	-	-	-	-	-	-	-	-	-	-	-
C5.51	W-6	ISI/UT/ISI-UT-1	PIPE TO VALVE (AO-4539) WELD	AUG	-	-	-	-	-	-	-	-	-	-	-	-
2	TORUS HPV			OWN	-	-	-	-	-	-	-	-	-	-	-	-
				PRE	-	-	-	-	-	-	-	-	-	-	-	-
C-F-2	106084	ISI/MT/ISI-MT-1	ISI-158074-A	ISI	-	-	-	-	-	-	-	-	-	-	-	-
C5.51	W-7	ISI/UT/ISI-UT-1	VALVE (AO-4539) TO PIPE WELD	AUG	-	-	-	-	-	-	-	-	-	-	-	-
2	TORUS HPV			OWN	-	-	-	-	-	-	-	-	-	-	-	-
				PRE	-	-	-	-	-	-	-	-	-	-	-	-
C-F-2	106085	ISI/MT/ISI-MT-1	ISI-158074-A	ISI	-	-	-	-	-	-	-	-	-	-	-	-
C5.51	W-8	ISI/UT/ISI-UT-1	PIPE TO VALVE (AO-4540) WELD	AUG	-	-	-	-	-	-	-	-	-	-	-	-
2	TORUS HPV			OWN	-	-	-	-	-	-	-	-	-	-	-	-
				PRE	-	-	-	-	-	-	-	-	-	-	-	-
C-F-2	106086	ISI/MT/ISI-MT-1	ISI-158074-A	ISI	-	-	-	-	-	-	-	-	-	-	-	-
C5.51	W-9	ISI/UT/ISI-UT-1	VALVE (AO-4540) TO PIPE WELD	AUG	-	-	-	-	-	-	-	-	-	-	-	-
2	TORUS HPV			OWN	-	-	-	-	-	-	-	-	-	-	-	-
				PRE	-	-	-	-	-	-	-	-	-	-	-	-