ARKANSAS NUCLEAR ONE

| FORM TITLE: | FORM NO. | REV. |
|---|---|---|
| **CALCULATION COVER SHEET** | 5010.015-ATT-2 | 1 |

Calc: No: 99-E-0019-02 Rev.No.: 0

Calc Title: ANO-2 MAAP and PROBFAIL Calculations

Unit: 2 Category: NQ
System(s)
Calc. Type NS

Component No(s):

Topic(s): PRAS
Plant Area: Bldg. N/A Elev.
Room: Wall
Coordinates:

Config. Checklist (per 5010.004) Completed (Y or N): Y
Document Comment/Resolution Form completed? (Y or N) Y

Abstract (Included Purpose/Results):
Purpose: To document MAAP and PROBFAIL calculations supporting development of Thermally Induced Steam Generator Tube Rupture (TI-SGTR) probabilities for ANO-2 using best-estimate SG pressure fragility curves from tube inspection data gathered during 2R13 and 2P99.
Results: The calculations and methodology for developing TI-SGTR probabilities was documented and the tube failure probabilities reported for a number of operating conditions.

Pages Revised and/or Added: Initial Issue – Pages 1-65, Attachment A (2 pages), Attachment B (6 pages)

Purpose of Revision: Initial Issue

| Initiating Document | Resulting Document | Key Design Input Document |
|---|---|---|
| | | Eng. Rept. 98-R-2005-01, Rev. 4<br>Eng. Rept. 98-R-2018-01, Rev. 1<br>ANO-2 Tech. Specs<br>Calc. 92-E-0050-10, Rev. 0<br>Calc. 99-E-0019-01, Rev. 0 |

Verification Method: Design Review X Alternate Calculation ☐ Qualification Testing ☐

Amends Calc(s): None

Supersedes calc(s): None

Computer Software Used: MAAP 4.0.3, HOTLEG, HRAD, PROBFAIL

| | | | | | | | |
|---|---|---|---|---|---|---|---|
| By: | G. B. Spikes | GBS | 2/3/00 | Rvw'd: | N/A | / | / |
| Chk'd | J. T. Sankoorikal | JTS | 2/8/00 | Apv'd: | D.W. Fouts | DWF | 2/9/00 |
| | (Print Name) | (Initials) | Date | | (Print Name) | (Initials) | (Date) |

Check if Additional Revisions ☐

# ANO-2 MAAP and PROBFAIL CALCULATIONS

## TABLE OF CONTENTS


| | Page |
|---|---|
| TABLE OF CONTENTS | 1 |
| 1.0 PURPOSE | 2 |
| 2.0 REFERENCES | 3 |
| 3.0 ASSUMPTIONS AND GIVEN CONDITIONS | 4 |
| 4.0 ANALYSIS | 5 |
| 4.1 Methodology | 5 |
| 4.2 Development of ANO-2 MAAP4 Parameter File | 20 |
| 4.3 Development MAAP4 Input Files | 45 |
| 5.0 RESULTS | 54 |
| 5.1 MAAP4 Calculations | 54 |
| 5.2 Tube Rupture Probabilities (PROBFAIL Calculations) | 63 |

ATTACHMENT A Diskette

ATTACHMENT B Steam Generator Tube Burst Probability Calculations

## 1.0 PURPOSE

To document MAAP and PROBFAIL calculations supporting development of Thermally Induced Steam Generator Tube Rupture (TI-SGTR) probabilities for ANO-2 using best-estimate, plant-specific SG pressure fragility curves based on data gathered during 2R13 and 2P99.

## 2.0 REFERENCES


1. E.L. Fuller, E.T. Rumble, G.W. Hannaman, and M.A. Kenton, Steam Generator Tube Integrity Risk Assessment Methodology, EPRI TR-107623, Vol. 1, April 1999.
2. CE Dwg. E-STD-164-412, Rev. 02, sh. 1 and 2, "Core Plate & Lower Support Assy As Built" (6600-M-2001-C3-58(1 & 2)-2).
3. CE Dwg. E-FA000-1601, Rev. 02, "Fuel Bundle Assembly," (dimensions from MFG/PO Order No. 5321-98-2071, "Arkansas Nuclear One – Unit 2, Batch S").
4. CE Dwg. E-STD-164-433, sh. 2, Rev. 03, "Fuel Alignment Plate" (6600-M-2001-C3-12(2)-1).
5. AN-FE-0354 Rev. 00, Attachment 1, "Arkansas Nuclear One Unit 2 Cycle 14 Final Reload Analysis Report October 1998, 10/16/98.
6. ANO Eng. Report 98-R-2005-01, Rev. 4, "Arkansas Nuclear One Unit 2 Cycle 15 Fuel Management Information and Cycle 15/16 Safety Analysis Groundrules."
7. A-AN-FE-0209, Rev. 00, "ANO-2 Cycle 14 Fuel Performance Analysis."
8. ANO-2 UFSAR, through Amend. No. 14.
9. CE Dwg. E-FAK-E100-C03, Rev. 4, "Fuel Bundle Grid Cage Assembly."
10. CE Dwg. E-6370-210-201, Rev. 06, "Reactor Coolant System Arrangement Elevation" (6600-M-2001-C1-3-8).
11. CDE Calc. QR-278-04, Rev. 0, "ANO-2 MAAP 3.0B Revision 17 Input Parameter File."
12. CE Dwg. E-73370-671-002, Rev. 03, "General Arrangement Arkansas Nuclear 96" I.D. Pressurizer Equipment No. 2T1" (6600-M-2001-C11-3-6).
13. CE Dwg. E-235-218, Rev. 5, "Pipe Assemblies for Arkansas Nuclear Piping" (6600-M-2001-C10-1-5).
14. CE Dwg. E-235-220, Rev. 2, "Pipe Assembly for Arkansas Nuclear Piping" (6600-M-2001-C10-7-2).
15. ANO Eng. Report 97-R-2018-01, Rev. 1, "ANO-2 Cycle 14 Fuel Management Information Groundrules."
16. ANO-2 Technical Specifications, through Amend. No. 110.
17. CE Dwg. E-234-791, Rev. 6, "General Arrangement and Assembly – Elevation, Arkansas Nuclear Steam Generator Equipment NO. 2E24A and 2E24B" (6600-M-2001-C6-1-7).
18. CE Dwg. E-234-799, Rev. 7, "High Pressure Head Details and Assembly – Elevation, Arkansas Nuclear Steam Generator Equipment NO. 2E24A and 2E24B" (6600-M-2001-C6-65-7).
19. CDE Calc. NEAD-NS-92/004.R0 (File QR-278-06), "ANO-2 MAAP Analyses to Support CE Owners Group Task for Severe Accident Management."
20. ANO Calc. 92-E-0050-10, Rev. 0, ANO-2 Steam Generator Surface Area and Total RCS Volume After 2R13, 3/29/99.

## 3.0 ASSUMPTIONS AND GIVEN CONDITIONS

A large number of calculations have been performed by Entergy Operations and Creare Engineering to characterize the probability of a TI-SGTR at ANO-2 during Cycle 14 operations. This calculation documents this effort, including methodology and codes used, cases analyzed, and review and analysis of results. Assumptions and given conditions applicable to these calculations are summarized below.

1. The methodology used to calculate tube rupture probabilities is consistent with the EPRI Steam Generator Tube Integrity Risk Assessment Methodology [1].*
2. The accident sequence (transient) calculations are performed using the MAAP4.0.3/PWR code (MAAP4), modified by Creare to provide additional outputs not normally available from MAAP4 and to facilitate performance of the necessary sensitivity calculations.
3. All MAAP4 transients are initiated from nominal 100% ANO-2 operating conditions.
4. Detailed hot leg gas temperature data for each accident sequence is calculated by a stand alone code developed by Creare called HOTLEG. HOTLEG uses thermal-hydraulic input data from the corresponding MAAP4 calculations.
5. The emissivity values used in the hot leg radiation heat transfer (HOTLEG) calculations are calculated using a stand alone code developed by Creare called HRAD. HRAD uses input data from the MAAP4 calculations.
6. Tube failure probabilities are calculated by a stand alone code developed by Creare called PROBFAIL. PROBFAIL uses the hot leg gas temperature data from the MAAP4/HOTLEG calculations to calculate a time-dependent hot leg temperature profile. This profile, together with ANO-2 best-estimate steam generator fragility curves, is then used to predict the conditional probabilities of tube rupture before hot leg rupture for each accident sequence at various times in the operating cycle.
7. The SG fragility curves are based on best-estimate SG tube burst probability values. The fragility curves provide tube burst probabilities estimated as a function of the primary to secondary SG pressure differential and burnup for the most limiting SG during ANO-2 Cycle 14. Tube burst probabilities are calculated using two sets of fragility curves. One set is based on tube defect data gathered during ANO-2 refueling outage 2R13 and the other set is based on updated tube defect data gathered during mid-cycle outage 2P99. The tube burst probabilities are calculated in Attachment B.

* Numbers in [ ] refer to references in Section 2.0.

# 4.0 ANALYSIS

## 4.1 Methodology

A detailed, step-by-step description of the process used to calculate tube rupture probability is provided in Chapter 6 of EPRI TR-107623 [1]. In this section, the major steps in the calculation of the ANO-2 tube rupture probabilities are described. Included is a description of the codes and important input and output files used in the analysis. Input/output files are included on the diskette in Attachment A.

### 4.1.1. Sequences analyzed

Calculations were performed for the 7 accident sequences listed below. For each sequence, the name of the base-case input file is shown in parenthesis to assist in locating the relevant files in Attachment A. The scheme used to name the input and output files is explained more completely in Tables 4.1.1 and 4.1.2. Additional input files used in the various calculations are listed in Table 4.1.3.

a. High/dry/high (*pbase*): Typical early SBO with failure of all EFW at time zero. The steam generators remain pressurized throughout.
b. High/dry/low (*base*): Same as high/dry/high except that the steam generator in the MAAP B-loop experiences a stuck-open safety valve as soon as the first lift occurs in that loop. The increase in differential pressure across the tube tends to make TI-SGTR much more likely.
c. High/dry/medium (*base3*): Same as high/dry/low except that both steam generators are depressurized to 3.8 MPa (550 psia) at 3000 secs. This was intended to simulate operator actions to control secondary pressure below the safety valve setpoint. As a result, tube differential pressures are reduced compared to high/dry/low and secondary side cooling is increased, resulting in a lower risk of TI-SGTR.
d. Medium/dry/low (*midbase*): Same as high/dry/low except that at 1800 seconds the primary system is depressurized through the high point vent valves. The vent valves attempt to maintain RCS pressure around 9.65 MPa (1400 psia).
e. Clear one cold leg loop seal as well as the downcomer, with all steam generators pressurized (*pclr*): One loop seal spontaneously clears soon after the core uncovers. In addition, the water level is assumed to drop quickly below the bottom of the downcomer. These two events result in the development of a unidirectional flow path around the B-loop, which provides more efficient heat transfer to the steam generators than does counter-current flow. All steam generators remain pressurized as does the RCS.
f. Clear one loop seal with the steam generator in the affected (B) loop depressurized (*clr*): Same as sequence *pclr*, except for the depressurized steam generator in the affected loop.
g. Clear one loop seal with the steam generator in the unaffected (U) loop depressurized (*clru*): Same as sequence *clr*, except that the unaffected loop is depressurized rather than the affected loop.

As described in Reference 1, a total of 8 calculations were run for each sequence with filled loop seals (a-d). These calculations represent various combinations of phenomenological assumptions. Listed below are the 8 MAAP calculations performed for the high/dry/high sequence. The input and output files for each calculation are labeled using the name shown along with a unique extension. Thus, a MAAP calculation named *pbase* will generate plot files labeled in the form *pbase.d31*, *pbase.d85*, etc. Table 4.1.1 lists the file extensions of the various files that are enclosed for each MAAP calculation. The conditional probabilities assigned to these sequence variations are provided in Tables 4.1.4 and 4.1.5.

(1) *pbase*: base case
(2) *pmxhi*: higher than nominal mixing in SG inlet plenum
(3) *pmxlo*: lower mixing in SG inlet plenum
(4) *pradlo*: lower than nominal radiation heat transfer rates in hot leg
(5) *pradhi*: higher radiation heat transfer in hot leg
(6) *pwratlo*: lower than nominal hot/leg natural circulation flow ratio
(7) *pbest*: best combination of these factors
(8) *pworst*: worst combination of these factors

Sequences with a cleared loop seal (e-g in the above list) were run with 3 sequence variations rather than 8. For example, the three calculations in which both steam generators remain at pressure are denoted as follows:

(1) *pclr*: base case
(2) *pclrhr*: higher than nominal hot leg radiation
(3) *pclrlr*: lower hot leg radiation

The rationale for these choices of sequences is provided in Reference 1.

In the next five sections, the steps that were followed to perform a complete calculation for a single accident sequence are described. To make the discussion concrete, the calculation of the tube rupture probability for the high/dry/low sequence, which is typically a limiting sequence for thermally induced steam generator tube rupture, is described.

1. Development of ANO-2 MAAP4 Model (Parameter File)

   The first step is to develop an ANO-2 MAAP4.0.3 parameter file. For this work, selected sections from the ANO-2 MAAP 3.0B Rev. 17.0 parameter file describing the RCS, core, steam generators, and engineered safeguards was combined with the generic MAAP4 Zion-like parameter sections defining the containment. This procedure has been used on several occasions when a MAAP4 model is not available and is considered acceptable since the containment plays essentially no role in the sequences studied. Standard Zion-file values for non-plant-specific parameters were also used. Parameter file development, including calculations of specific parameters, is documented in Section 4.2. The resulting file is named *ano2.par* and a copy is provided in Attachment A. This parameter file is used in all MAAP4 accident sequence calculations. Model changes unique to each accident sequence are implemented via local parameter changes in the accident sequence input files (see Section 4.3).

2. Radiation Heat Transfer Calculations using HRAD

   The first step in the calculations for a specific accident sequence is to perform a base case MAAP calculation with a trial value for the hot leg emissivities EG and EWL. To do this, the input file for the sequence, called in this case *base.inp*, is prepared. The sequence is then run, which produces among the other output files, a dedicated TI-SGTR file denoted (in this case) *base.out*.

   The file *base.out* is then input to a stand alone code called HRAD (Reference 1) which is run interactively. HRAD performs a detailed hot leg heat transfer calculation at a user-input time. Typically, a time a few hundred seconds earlier than the MAAP-calculated time of hot leg rupture (obtained from the summary file, e.g. *base.sum*) was used. The user also inputs an effective hot leg

surface emissivity and whether the calculation is to be performed in the MAAP B- or U-loop (the former is normally used). The output of HRAD is an effective emissivity value, which is then used in MAAP for parameters EG, and EWL. This procedure provides best-estimate hot leg heat transfer rates by compensating for the simplified model used in MAAP for this important process. The emissivity values calculated by HRAD for the various sequences can be seen in the input decks for the base case runs and are listed in Table 4.1.6. For some of the uncertainty cases, these emissivities are increased (high thermal radiation cases) or reduced (low radiation cases) in the manner described in Reference 1. Experience indicates that it is not necessary to iterate this process, i.e. a single trial calculation suffices for obtaining the emissivities used in the production runs.

3. MAAP4 Calculations

After the initial base case MAAP calculation has been run and HRAD has been used to calculate best-estimate emissivities, all the MAAP calculations for the sequence can be performed. To facilitate this process, two batch files were prepared: *run1ano.bat* and *all_anoruns.bat*. The latter sequentially calls the former for all the sequence variations. A listing of *all_anoruns.bat* is included as Figure 4.1.1. Note that the base case is also re-run after the improved emissivity values have been calculated by HRAD.

Input files for each phenomenological sequence variation were prepared using the procedure in Reference 1. The naming convention is detailed in Table 4.1.1. For example, the high/dry/low sequence utilizes the following input files:

(1) *base.inp*: base case with best-estimate values for all phenomenological parameters,
(2) *mxhi.inp*: high mixing rates in SG inlet plenum,
(3) *mxlo.inp*: low mixing rates in SG inlet plenum,
(4) *radlo.inp*: low radiation heat transfer rates in hot leg (high emissivities),
(5) *radhi.inp*: high radiation heat transfer rates in hot leg,
(6) *wratlo.inp*: low hot/leg natural circulation flow ratio, caused by reduced "out" tube fraction,
(7) *best.inp*: best combination of phenomenological factors,
(8) *worst.inp*: worst combination of phenomenological factors.

All the file names for the various cases can be readily obtained from the listing in Figure 4.1.1. Input files are developed in Section 4.3.

The principal input and output files for each sequence are stored in Attachment A in "zip" files using the input file name. Thus, the base case MAAP files for the high/dry/low sequence are contained in *base.zip*.

A modified version of MAAP4.0.3 was used in these calculations. With a few exceptions, the modifications were made either to provide additional outputs that are not normally available from MAAP, or to facilitate sensitivity calculations. A description of all the changes made to MAAP is included as Figure 4.1.2. Copies of the revised MAAP source files are provided on the diskette in Attachment A.

4. Improved Hot Leg Temperature Calculations using HOTLEG

As mentioned earlier, the MAAP models for hot leg heat transfer are somewhat oversimplified for the purpose of calculating TI-SGTR. To remedy this, the "*.out*" file from MAAP (e.g. *base.out*) is

input to a stand alone code called HOTLEG. The output of this code is a "*.det*" file (e.g. *base.det*) of the same format whose results are calculated using a more detailed model for heat transfer in the hot leg. This file is used for the calculation of tube rupture probability. The "*.det*" files from each sequence are stored in the corresponding MAAP4 "zip" file on the diskette in Attachment A.

To date little difference has been noted between the rupture probabilities calculated using the "*.out*" file from MAAP and the "*.det*" file from HOTLEG, so long as accurate emissivities are input to MAAP from a HRAD calculation. This is because the overall MAAP hot leg structure temperature modeling has both conservative and nonconservative features, and these tend to cancel in practice.

Since a HOTLEG calculation is performed for each MAAP calculation, it is convenient to perform both calculations at the same time. A batch file, *run1ano.bat*, is used to automate this process. This batch file is called sequentially from batch file *all_anoruns.bat*. The arguments supplied to HOTLEG via the run1ano command are described in Figure 4.1.1. Copies of the "*.bat*" files are provided on the diskette in Attachment A.

5. Calculations of the Probability of Tube Rupture using PROBFAIL

After the 3or 8 "*.det*" files have been assembled for a given accident sequence, the tube rupture probability can be calculated using PROBFAIL. To do this, an input file is prepared for PROBFAIL that lists the names of the *.det* files along with the conditional probabilities associated with each. For example, the file used for the high/dry/low accident sequence is named *case_d* (see Table 4.1.2). A listing of this particular file is provided in Figure 4.1.3. Copies of all PROBFAIL input files are included on the diskette in Attachment A. The resulting output from PROBFAIL is contained in a "*.prf*" file, in this example *case_d.prf*, which lists the probabilities of tube rupture for each of the phenomenological cases as well as the aggregate results for the sequence as a whole.

The PROBFAIL calculations were run in a manner analogous to the MAAP/HOTLEG calculations. That is, a batch file called *all_probfail_new.bat* calls another batch file *all_probfail_1seq.bat* for each time of interest in the operating cycle. A listing of these two batch files is provided in Figure 4.1.4 and copies are available on the diskette in Attachment A. (The *all_probfail_1seq.bat* file is for the 2R13-based cases only.)

All of the PROBFAIL output files from the 2R13 cases have been combined into a file named *allprfs.zip* and placed on the diskette in Attachment A. Output files from the 2P99 cases have been combined into a text file named *allprfs121.txt* and placed on the Attachment A diskette.

## Table 4.1.1 Names of Files Provided for MAAP4 Accident Calculations

The files associated with each MAAP4 case included on the diskette in Attachment A are named using the following file extensions. Additional files were also created during each MAAP4 run, but since these have little use in the TI-SGTR analysis they are not included.

| File name | Produced by | Used by | Description |
|---|---|---|---|
| *case.inp* | Analyst | MAAP | Input case description file |
| *case.d31* | MAAP4 | Analyst's plot program | Principal MAAP plot file |
| *case.d85* | MAAP4 | Analyst's plot program | Specialized TI-SGTR plot file |
| *case.sum* | MAAP4 | Analyst | MAAP summary file, with times of key events |
| *case.out* | MAAP4 | HRAD, HOTLEG | Specialized TI-SGTR output file, used by other codes |
| *case.det* | HOTLEG | PROBFAIL | Equivalent to *case*.out, but calculated using a more detailed model in HOTLEG |

The *case* names are created by combining an accident sequence designator with a name associated with the phenomenological assumptions. The latter are as listed below, where *sn* is the accident sequence designator. See Figure 4.1.1 for a list of all *case* names.

| Case name (*case*) | Description |
|---|---|
| *sn*base | base case |
| *sn*mxlo | low inlet plenum mixing |
| *sn*mxhi | high inlet plenum mixing |
| *sn*radlo | low hot leg radiation |
| *sn*radhi | high hot leg radiation |
| *sn*wratlo | low steam generator/hot leg natural circulation flow ratio |
| *sn*best | best combination of factors |
| *sn*worst | worst combination of factors |
| *sn*hr | high hot leg radiation - cleared loop seal cases |
| *sn*lr | low hot leg radiation - cleared loop seal cases |

## Table 4.1.1 (cont'd) Names of Files Provided for MAAP4 Accident Calculations

The designators *sn* which denote the accident sequence in the *case* names are:

| *sn* designator (prefix unless stated) | Accident sequence |
|---|---|
| p | high/dry/high |
| [blank] | high/dry/low |
| 3 (suffix) | high/dry/medium |
| mid | medium/dry/low |
| pclr | cleared loop seal, pressurized SGs |
| clru | cleared loop seal, unaffected loop SG depress. |
| clr | cleared loop seal, affected loop SG depress. |

**Table 4.1.2 Names of PROBFAIL-related Files Provided for Each Accident Sequence (For 2R13 Cases)**

A total of 3 (loop seal clearing cases) or 8 (cases with intact loop seals) MAAP4 calculations are used to model a given accident sequence. These cases are used to assess the importance of phenomenological uncertainties on the results. The files associated with a particular accident sequence taken as a whole are as follows. In these names, *acc_seq* denotes the name assigned to an accident sequence (e.g. *pcase_d*, *case_d*, etc.).

| File name | Produced by | Used by | Description |
|---|---|---|---|
| *acc_seq* (no file extension) | Analyst | PROBFAIL | list of *case.det* files associated with this sequence, along with their conditional probability (see Figure 4.1.3) |
| *acc_seq_boc.prf* | PROBFAIL | Analyst | TI-SGTR probabilities for sequence *acc_seq* at time "*boc*"* |

*Similar files are produced for the other times of interest.

The accident sequence names (*acc_seq*) are similar but (unfortunately) not identical to those used with the MAAP4 names:

| Name(*acc_seq*) | Accident sequence (see text for explanation) |
|---|---|
| *pcase_d* | high/dry/high |
| *case_d* | high/dry/low |
| *case_d3* | high/dry/medium |
| *case_mid* | medium/dry/low |
| *pclr* | cleared loop seal with pressurized steam generator |
| *clru* | cleared loop seal with unaffected loop steam generator depressurized |
| *clr* | cleared loop seal with affected loop steam generator depressurized |

**Table 4.1.3 Miscellaneous Files**

In addition to the case- and sequence-specific files, other analyst-prepared files used in the MAAP4 and PROBFAIL calculations are as follows:

| Name | Description |
|---|---|
| *ano2.par* | MAAP4 model for ANO2. |
| *par.dat* | Dummy file containing name of parameter file. |
| *boc.dat* | Tube rupture probability versus pressure at time BOC.* |
| *moc.dat* | Tube rupture probability versus pressure at time MOC.* |
| *eoc.dat* | Tube rupture probability versus pressure at time EOC.* |
| pristine.dat | Approximate tube rupture probability for a pristine tube. |

*Developed using Entergy-supplied results for various times during operating cycle.

**Table 4.1.4 Phenomena Investigated to Assess Uncertainties in Hot Leg Heat Transfer Phenomena (Sequences with Blocked Loop Seals)**

| Phenomena | Variation | Relative Likelihood Assigned |
|---|---|---|
| Hot Leg Radiation | 150% of nominal<br>Nominal<br>50% of nominal | 0.2<br>0.6<br>0.2 |
| SG Plenum Mixing | High<br>Nominal<br>Low | 0.2<br>0.7<br>0.1 |
| SG/HL Circulation Strength | Nominal<br>Reduced "Out" fraction | 0.8<br>0.2 |

**Table 4.1.5 MAAP4 Calculations Performed to Assess Uncertainties in Hot Leg Heat Transfer Phenomena (Sequences with Blocked Loop Seals)**

| Sequence | Conditional Probability (percent) |
|---|---|
| Base case | 40.8 |
| High SG inlet plenum mixing | 11.7 |
| Low SG inlet plenum mixing | 5.83 |
| High Radiation | 13.6 |
| Low Radiation | 13.6 |
| Low SG/HL Natural Circulation Ratio | 10.2 |
| Best combination | 3.88 |
| Worst combination | 0.485 |

Note: The probabilities shown in Table 4.1.5 are calculated by combining and then normalizing the individual factors listed in Table 4.1.4 (Reference 1). The same process is followed for sequences with cleared loop seals, but in this case the only phenomenological uncertainty considered is thermal radiation.

**Table 4.1.6 Base-case Emissivities Calculated by HRAD Code and Used in MAAP4 Runs**

| Accident Sequence Name | Emissivity |
|---|---|
| *pbase* | 0.64 |
| *base* | 0.67 |
| *base3* | 0.64 |
| *midbase* | 0.64 |
| *pclr* | 0.72 |
| *clru* | 0.72 |
| *clr* | 0.72 |

**Figure 4.1.1 Listing of *the all_anoruns.bat* File (Used to Run All the MAAP4 Calculations)**

```
rem hi/dry/high:
rem
call run1ano pbase 0.8 1.0 1.0
call run1ano pradhi 0.8 1.5 1.0
call run1ano pradlo 0.8 0.5 1.0
call run1ano pwratlo 0.8 1.0 1.0
call run1ano pmxlo 0.8 1.0 1.0
call run1ano pmxhi 0.8 1.0 1.0
call run1ano pbest 0.8 1.5 1.0
call run1ano pworst 0.8 0.5 1.0
rem
rem medium/dry/low:
rem
call run1ano midbase 0.8 1.0 1.0
call run1ano midradhi 0.8 1.5 1.0
call run1ano midradlo 0.8 0.5 1.0
call run1ano midwratlo 0.8 1.0 1.0
call run1ano midmxlo 0.8 1.0 1.0
call run1ano midmxhi 0.8 1.0 1.0
call run1ano midbest 0.8 1.5 1.0
call run1ano midworst 0.8 0.5 1.0
rem
rem high/dry/low:
rem
call run1ano base 0.8 1.0 1.0
call run1ano radhi 0.8 1.5 1.0
call run1ano radlo 0.8 0.5 1.0
call run1ano wratlo 0.8 1.0 1.0
call run1ano mxlo 0.8 1.0 1.0
call run1ano mxhi 0.8 1.0 1.0
call run1ano best 0.8 1.5 1.0
call run1ano worst 0.8 0.5 1.0
rem
rem high/dry/medium
rem
call run1ano base3 0.8 1.0 1.0
call run1ano radhi3 0.8 1.5 1.0
call run1ano radlo3 0.8 0.5 1.0
call run1ano wratlo3 0.8 1.0 1.0
call run1ano mxlo3 0.8 1.0 1.0
call run1ano mxhi3 0.8 1.0 1.0
call run1ano best3 0.8 1.5 1.0
call run1ano worst3 0.8 0.5 1.0
rem
rem cleared loop seal with pressurized sgs
rem
call run1ano pclr 0.8 1. 1.0
call run1ano pclrhr 0.8 1.5 1.0
call run1ano pclrlr 0.8 0.5 1.0
rem
rem clear loop seal with depress in uncleared (unaffected) loop
rem
call run1ano clru 0.8 1. 1.0
call run1ano clruhr 0.8 1.5 1.0
```

**Figure 4.1.1 (cont'd) Listing of *the all_anoruns.bat* File (Used to Run All the MAAP4 Calculations)**

```
call run1ano clrulr 0.8 0.5 1.0
rem
rem--cases with depress in cleared loop
call run1ano clr 0.8 1. 1.0
call run1ano clrhr 0.8 1.5 1.0
call run1ano clrlr 0.8 0.5 1.0
```

Notes

1. The arguments to the *run1ano* command are as follows:
   a. The name of the accident calculation,
   b. The effective emissivity of the hot leg ID surface; see Reference 1 for discussion,
   c. The fraction of nominal radiation heat transfer assumed (1.0 for base case, 0.5 for low radiation, 1.5 for high radiation),
   d. The distance in meters into the hot leg at which the detailed heat transfer calculations using HOTLEG are to be performed (chosen to be near nozzle/pipe joint).

2. The various calculations initiated by *run1ano* are organized by accident sequence. As shown above, three phenomenological variations are run for each sequence involving loop seal clearing, and eight variations are run for sequences with blocked loop seals.

## Figure 4.1.2 Modifications Made by Creare to PWR MAAP4.0.3 to Support ANO-2 Calculations (and Other EPRI TI-SGTR Projects)

NOTE: Copies of revised subroutines are included on the diskette in Attachment A.

1. Subroutine EVENTS
   a. Allow the modeling of loop seal clearing with MAAP miscellaneous input FEXTRA(294).
   b. Allow the modeling of steam generator relief and safety valve deadbands with FEXTRA(299).
   c. Count steam generator relief and safety valve lifts (I/O only).
   d. Count pressurizer relief and safety valve lifts (I/O only).

2. Subroutine HLNC
   a. Allow the user to disable heat transfer from the inlet plenum gas to the divider plate using FEXTRA(298) (for conservatism, used in all ANO-2 calculations).
   b. Add capability to disable "internal natural convection" in hot leg with FEXTRA(291) (for conservatism, used in all ANO-2 calculations).*
   c. Plot various internal quantities (I/O only).
   d. Add capability to disable radiation in hot leg for sensitivity studies with FEXTRA(290) or disable convection using FEXTRA(289) (not used for ANO-2).*
   e. Add capability to disable native addition of radiation and convective heat transfer coefficients in hot leg using FEXTRA(249) (not used for ANO-2).*
   f. Allow the shutoff of inter-stream heat transfer in hot leg using FEXTRA(297) for sensitivity studies (not used for ANO-2).
   g. Correct various errors in B&W-specific hot leg natural circulation model (not used for ANO-2).

3. Subroutine HTSHCR: Allow the disabling of natural convection internal to a control volume for sensitivity studies with FEXTRA(291) (for conservatism, used in all ANO-2 hot leg calculations).*

4. Subroutine PTARGT: Plot pressurizer safety and relief valve lifts (I/O only).

5. Subroutine PZR:
   a. Calculate and plot surge line creep rupture index (I/O only).
   b. Allow the disabling of heat transfer between draining water and the wall of the surge line using FEXTRA(284) for sensitivity studies (not used for ANO-2).

6. Subroutine PSHS: Disable "leakage" heat transfer to containment from hot leg to improve accuracy of hot leg OD temperature calculation (used for all ANO-2 calculations).

7. Subroutine HEATUP:
   a. Add ability to shutoff natural circulation for sensitivity studies using FEXTRA(100) (not used for ANO-2).
   b. Allow the modeling of heat transfer between recirculated gas and water in lower plenum for sensitivity studies using FEXTRA(212) (not used for ANO-2).

8. Subroutine PRISYS:
   a. Add the capability to model the effect of the RCP impeller on loop flow when the suction piping is cleared using FEXTRA(286).
   b. Allow the user to place a break in node 13 using FEXTRA(293) to better model the effect of RCP seal LOCAs on internal RCS through-flows (not used for ANO-2).

**Figure 4.1.2 (cont'd) Modifications Made by Creare to PWR MAAP4.0.3 to Support ANO-2 Calculations (and Other EPRI TI-SGTR Projects)**

c. Add a call to subroutine CRPFIL which outputs the files needed to calculate tube rupture using HOTLEG and PROBFAIL (I/O only).
d. Continue creep rupture index calculation beyond the point where the index passes a value of unity (I/O only).
e. Add the capability to model an external source of steam from the lower plenum for sensitivity studies using FEXTRA(285) (not used for ANO-2).
f. Allow the user to subsequently shutoff hot leg natural circulation in sensitivity studies (not used for ANO-2).
g. Plot a number of internal quantities (I/O only).
h. Allow an alternate hot leg flow averaging procedure for sensitivity studies with FEXTRA(282) (not used for ANO-2).

9. Subroutine ROW: Allow the user to reduce core hydrogen generation rates using FEXTRA(280) and FEXTRA(281) for sensitivity studies (not used for ANO-2 analyses).

10. Subroutine CRPFIL: Output a special output file for subsequent analysis.

11. Subroutine NEW_CREEP: Add a more accurate and general model for hot leg creep rupture for use in sensitivity studies (not used for ANO-2 analyses).*

---

*More accurate hot leg creep and heat transfer models are implemented in stand alone codes HOTLEG and PROBFAIL. Results from those code were used in the calculations of the probability of tube failure for ANO-2. Thus, there is relatively little need to use improved heat transfer or creep models in MAAP4.

## Figure 4.1.3 PROBFAIL Input File *case_d* For the High/Dry/Low Sequence

This file is for the high/dry/low sequences and is typical for all sequences.

```
1 //use carbon steel(1) or alloy steel (3)
.\abase\base.det  0.408
.\amxhi\mxhi.det  0.117
.\amxlo\mxlo.det  0.0583
.\aradhi\radhi.det 0.136
.\aradlo5\radlo5.det 0.136
.\awratlo\wratlo.det 0.102
.\abest\best.det  0.0388
.\aworst\worst.det  0.00485
```

Notes:

1. This file contains a listing of the name and location of the "*.det*" files for the various phenomenological cases considered for the high/dry/low sequence, along with their conditional probabilities. The latter are determined from Table 4.1.5.
2. The hot leg is assumed to be constructed of carbon steel plate, similar to ASTM A516 Gr 70 (Reference 1).
3. Note that an "a" was appended to the names of the various files when the directories were created by the *runlano* command (this is meant to signify "ANO").
4. The original MAAP4 calculation for the low radiation high/dry/low sequence, case *radlo*, resulted in an anomalous (early) time of vessel failure. This lead to a nonconservatively low tube rupture probability. For this reason, another case named *radlo5* was run in which the emissivities were increased from 0.40 to 0.41. This gave vessel failure timing results consistent with the other high/dry/low calculations. Since case *radlo5* was believed to provide a better relative measure of the effects of uncertainties in thermal radiation, this case was used in the calculation of tube rupture probability as indicated above. This problem was not encountered for any of the other accident sequences, although "chaotic" behavior of this nature has been encountered previously with MAAP4 in other studies.

## Figure 4.1.4 Batch Files Used to Run PROBFAIL Calculations

***all_probfail_1seq.bat***

This file runs a given accident sequence, whose name is supplied as an argument, for all the tube conditions of interest. The results are stored in an output file traceable to the particular condition assumed in directory *.\new_prfs*):

```
probfailn %1 boc.dat nodebug 1.E-5
copy %1.prf .\new_prfs\%1_boc.prf
probfailn %1 moc.dat
copy %1.prf .\new_prfs\%1_moc.prf
probfailn %1 eoc.dat
copy %1.prf .\new_prfs\%1_eoc.prf
probfailn %1 pristine.dat
copy %1.prf .\new_prfs\%1_pristine.prf
```

***all_probfail_new.bat***

This batch file performs the calculations for the accident sequences of interest.

```
call all_probfail_1seq pcase_d
call all_probfail_1seq case_d
call all_probfail_1seq pclr
call all_probfail_1seq clru
call all_probfail_1seq clr
call all_probfail_1seq case_d3
call all_probfail_1seq case_mid
```

## 4.2 Development of ANO-2 MAAP4 Parameter File

This section documents the ANO-2 MAAP 4.0.3 (MAAP4) parameter file (*ano2.par*) developed by Entergy Operations and Creare Engineering for performing in the TI-SGTR MAAP calculations. The ANO-2 MAAP4 parameter file is a hybrid file developed by combining the generic MAAP4 Zion-like (PWR large dry) parameter file with the ANO-2 MAAP3.0B Rev. 17.0 (MAAP3B) parameter file. The resulting file includes ANO-2 specific values for parameters important to the TI-SGTR transients (e.g. RCS, S/G geometry) while retaining values from the generic file for parameters not important to these transients (e.g., containment geometry).

The ANO-2 MAAP4 parameter file is divided into four sections consisting of the generic MAAP4 Zion-like PWR parameter file followed by the following three appended (overlay) sections:

1. A set of relatively standard changes used for performing TI-SGTR studies. These changes were developed by Creare.
2. Selected parameter groups taken from an ANO-2 MAAP3.0B Rev. 17.0 file, modified and supplemented as needed for compatibility with MAAP4. The ANO-2 MAAP 3.0B parameter file is a detailed, ANO-2 specific model developed by Entergy Operations and documented in CDE calculations QR-278-04 [11] and NEAD-NS-92/004.R0 [19]. This model has been extensively reviewed, benchmarked and successfully applied in several applications. The overlay parameter groups are:
   - Core (Parameter Group 14),
   - Engineered Safeguards (Group 6),
   - Initial Conditions (Group 10),
   - Primary System (Group 2),
   - Pressurizer (Group 3),
   - Steam Generator (Group 13),
   - Fission Products (Group 17),
3. A set of ANO-2 specific values of selected Model Parameters important to TI-SGTR calculations.

Development of the appended parameter file sections is documented in the following calculations.

### 4.2.1. Standard Changes For TI-SGTR Studies

This parameter file section consists of a relatively standard set of changes applicable to any PWR undergoing TI-SGTR evaluations. The changes are developed and documented in Table 4.2.1 at the end of this section.

### 4.2.2. Changes to ANO-2 MAAP3.0B Parameter File Groups

Changes and additions to the selected ANO-2 MAAP3.0B parameter file groups listed in Section 4.2 are developed and documented in Table 4.2.2. Calculations supporting selected parameters are provided below.

#### 4.2.2.1 Core (Parameter Group 14)

The MAAP4 core is divided into three distinct regions:

1. Upper non-active core region defined by number of axial rows parameter NNFT (upper fuel tie plate and core structure).
2. Active core region (containing all UO2 material).
3. Lower non-active core region defined by number of axial rows parameter NNFB (lower fuel tie plate and core support plate).

The MAAP 3.0B ANO-2 core includes 10 axial nodes (rows), with the upper representing the non-fueled region above TAF. The revised MAAP4 core retains this configuration but adds two new axial nodes to represent the lower non-active region.

4.2.2.1.1 Number of axial core rows.

Parameter: NAXNOD

Add 2 to MAAP3.0B value:

| NAXNOD = 12 |
|---|

4.2.2.1.2 Number of nodes on top and bottom.

Parameter: NNFT (top)
NNFB (bottom)

Per discussion above:

| NNFT = 1 |
|---|

| NNFB = 2 |
|---|

4.2.2.1.3 Length of bottom non-fueled regions of core.

Parameters: XDZNFB(I); I= 1,NNFB

Define: L1 = Length of Lower Support Structure (LSS),
L2 = thickness (length) of Core Support Plate (CSP),
L3 = length of fuel assembly (FA) lower end fitting,
L4 = distance from top of lower end fitting to Bottom of Active Fuel (BAF).
(See sketch on following page.)

L1 = 37 5/8 in ([2], sh. 1)
L2 = 2.0 in. ([2], sh. 1)
L3 = A05 = 3.112 in. [3]
L4 = A07 = 2.480 in. [3]

Total length includes only Core Support Plate (CSP) (CSP to BAF):

XDZNFB(1) + XDZNFB(2) = L2 + L3 + L4 = 2.0 + 3.112 + 2.48 = 7.592 in = 0.633 ft.

XDZNFB(1) = XDZNFB(2) = ½( XDZNFB(1) + XDZNFB(2)) = ½(0.633) = 0.3165 ft.

XDZNFB(1) = 0.3165 ft

XDZNFB(2) = 0.3165 ft

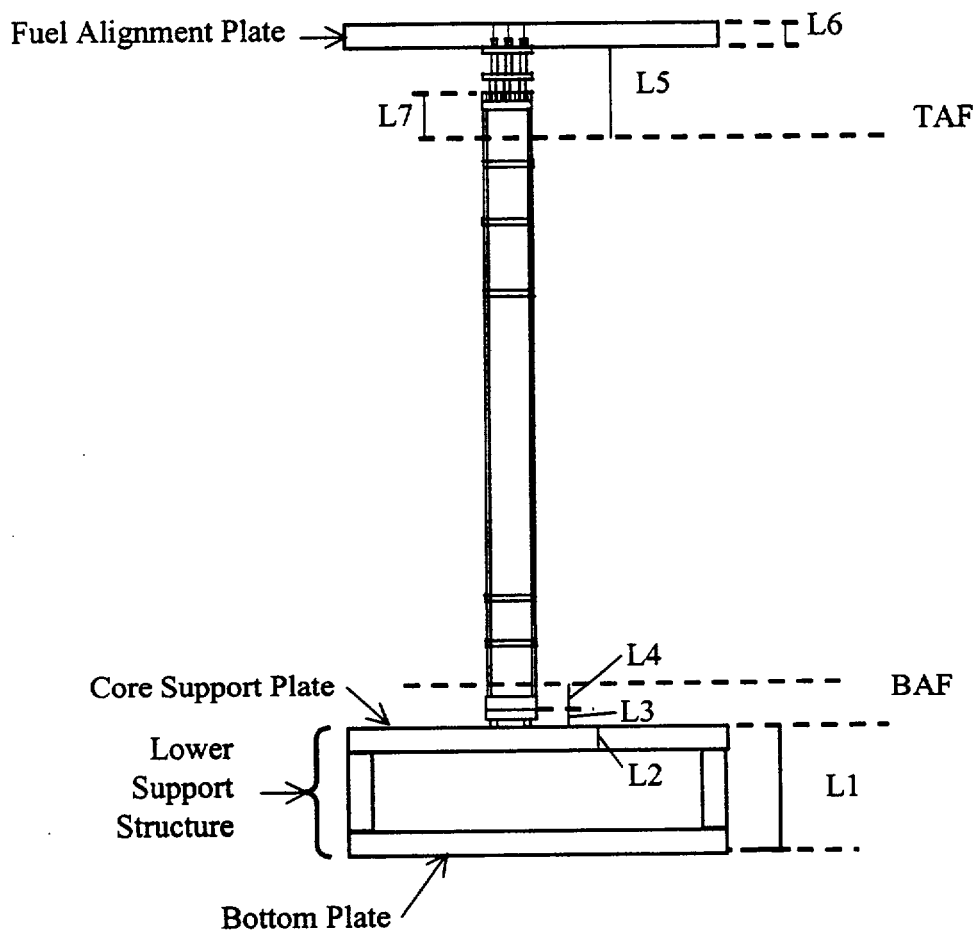

4.2.2.1.4 Length of top non-fueled region of core.

MAAP4 Parameters: XDZNFT(I); I = 1, NNFT.

Assume requested length is from Top of Active Fuel (TAF) to top of Fuel Alignment Plate (FAP).

Define: L5 = distance from TAF to bottom of FAP, or top of upper end fitting,
L6 = thickness (length) of FAP,
L7 = distance from TAF to top of fuel rods.
(See above sketch.)

From Reference 3:

L5 = A02 – (A06 + A07 + A05) = 175.628 – (150.000 + 2.480 + 3.112),
L5 = 20.036 in., and
L6 = 3 ½ in [4].

From Reference 3, length of top fuel assembly non-fueled region (L7) is:

L7 = A04 – (A06 + A07) = 161.868 – (150.000 + 2.480),
L7 = 9.388 in.

However, since requested length is assumed from TAF to top of FAP,

XDZNFT(1) = L5 + L6 = 20.036 + 3.5

**XDZNFT(1) = 23.536 in = 1.96 ft**

NOTE: In the following calculations, the Zircaloy masses in the fuel rod regions do not include the mass of the guide tubes (guide tube mass is neglected).

4.2.2.1.5 Masses of Zircaloy and stainless steel in the bottom non-fueled regions of core.

MAAP4 Parameters: MSSNFB(I) (Stainless Steel);
MZRNFB(I) (Zircaloy).
I=1,NNFB

(a) Masses of Zircaloy and of stainless steel in bottom non-fueled *fuel rod* regions (I=2).

There is no SS in this region (the bottom grid material is Inconel per Table 2-1, Ref. 5):

**MSSNFB(2) = 0.0 lbm**

Zircaloy (Zr):

Total Zr mass per FA = 250 lbm (assumes 236 rods/FA, Batch S, Table 2-1, Ref. 5),

Number of FA's = 177 (Table 1-1, Ref. 5),

Overall length of fuel rod = 161.868 in (=A04, Ref. 3),

Length of lower non-fueled region = L4 (sketch) = 2.48 in (=A07, Ref. 3).

Mass Zr = MZRNFB(I) = [(250 lbm/FA) * (2.48/161.868)] * 177 FA,

**MZRNFB(2) = 678 lbm**

(b) Masses of Zircaloy and of stainless steel in bottom non-fueled *support plate* regions (I = 1, includes CSP and fuel assembly lower end fittings).

Stainless Steel (SS):

Mass of FA lower end fittings:

$M_{LEF}$ = 2,413 lbm

(Ref. 6, Table III.2-3.)

Mass of CSP:

$M_{CSP} = \rho * V_{CSP}$, where

$V_{CSP}$ = volume of CSP metal,

$\rho$ = nominal density of stainless steel.

$$V_{CSP} = \frac{\pi}{4} D_{CSP}^2 t_{CSP} - \sum_{\substack{Flow\\Hole\\Types}} \frac{\pi}{4} N_i D_i^2 t_{CSP} = \frac{\pi}{4}(t_{CSP})\left( D_{CSP}^2 - \sum_{\substack{Flow\\Hole\\Types}} N_i D_i^2 \right), \text{ where}$$

$D_{CSP}$ = CSP diameter,

$t_{CSP}$ = CSP thickness,

$D_i$ = diameter of CSP flow hole type "i",

$N_i$ = number of type "i" flow holes.

$D_{CSP}$ = 133 7/8 in (Ref. 2, sh 1),

$t_{CSP}$ = 2.0 in (Ref. 2, sh 1).

From Ref. 2, sh. 2, CSP flow holes are as follows:

| Type (i) | Number ($N_i$) | Diameter ($D_i$) |
|---|---|---|
| 1 | 144 | 2.187 in |
| 2 | 48 | 1.562 in |
| 3 | 4 | 3.00 in |
| 4 | 885 | 1.938 in |

$V_{CSP} = (\pi/4)(2.0)[(133\ 7/8)^2 - (144)(2.187)^2 - (48)(1.562)^2 - (4)(3.0)^2 - (885)(1.938)^2]$,

$V_{CSP} = 21{,}609\ in^3$.

CSP material is ASTM A240-67 stainless steel. Density of SS is assumed equal to 501 $lbm/ft^3$ (a typical value). Therefore,

$M_{CSP} = [(21{,}609\ in^3)/1728] * (501\ lbm/ft^3) = 6{,}265.1$ lbm.

The total SS mass is the lower end fitting mass (calculated above) + the CSP mass:

$MSSNFB(1) = M_{CSP} + M_{LEF} = 6{,}265.1 + 2{,}413$

| MSSNFB(1) = 8,675 lbm |
|---|

There is no Zircaloy in this region:

| MZRNFB(I) = 0.0 lbm |
|---|

4.2.2.1.6 Masses of Zircaloy and of stainless steel in the top non-fueled regions of core.

MAAP4 Parameters: MSSNFT(I) (Stainless Steel);
MZRNFT(I) (Zircaloy).
I=1,NNFT

Stainless Steel (SS)

The SS mass in this region is due to the compression springs. The volume of one spring ($V_{SPR}$) is equal to 0.1112 $in^3$ (Ref. 7, Table 3-1). Using the SS density and number of FA's and fuel rods from the previous calculation, the total spring/SS mass is equal to:

$MSSNFT(1) = [(177\ FA)(236\ rods/FA)(0.1112\ in^3)]/1728 * 501\ lbm/ft^3$,

| MSSNFT(1) = 1,347 lbm |
|---|

Zircaloy (Zr)

Total Zr mass per FA = 250 lbm (assumes 236 rods/FA, Batch S, Table 2-1, Ref. 5),

Number of FA's = 177 (Table 1-1, Ref. 5),

Overall length of fuel rod = 161.868 in (=A04, Ref. 3),

Length of upper non-fueled region (=L7, see Calc. 4.2.2.1.4 and sketch in 4.2.2.1.3):

L7 = 9.388 in.

Mass Zr = MZRNFT(1) = [(250 lbm/FA) * (9.388/161.868)] * 177 FA,

| MZRNFT(1) = 2,566.4 lbm |
|---|

4.2.2.1.7 Number of rows per fuel assembly.

MAAP4 Parameter: NROWS.

Approximated by the square root of the number of pins/assembly (NPIN):

NPIN = 236 (All Cycle 14 fuel, per Table 1-1, Ref. 5),

NROWS = $\sqrt{236}$,

NROWS = 15

4.2.2.1.8 Total number of control rods in the core.

MAAP4 Parameter: NCROD.

ANO-2 core has a total of 81 full length and part length CEA's. Each CEA consists of five elements (Ref. 8, Table 4.2-1). Therefore, the total number of control rods is:

NCROD = 81 x 5

NCROD = 405

4.2.2.1.9 Grid spacer index, moving bottom to top.

MAAP4 Parameter: NSPCR(I), I = 1,NAXNOD.

NSPCR(I) = 1 indicates presence of a spacer grid at the bottom of the I'th axial row. :

Spacer grid inventory:

| Number | Description | Material |
|---|---|---|
| 1 | Lower (bottom) grid | Inconnel |
| 10 | Intermediate grids | Zircaloy |
| 1 | Top grid | Zircaloy |

(From Ref. 5, Table 2-1 and CE Dwg. E-FAK-E100-CO3 [9].)

Reference elevation: BAF.

Grid spacing is shown on Ref. 9. BAF location is from Ref. 2. Grid spacer elevations are calculated below. Elevations are at the top edge of the spacer grid.

| Grid | Elevation (in) | Calculation/Notes |
|---|---|---|
| ***Lower grid*** | 0.0 | BAF is at top of lower grid [3] |
| ***Intermediate grids*** | | |
| 1 | 9.97 | 12.450 – 2.48 |
| 2 | 24.782 | 9.97 + 14.812 |
| 3 | 39.594 | 24.782 + 14.812 |
| 4 | 54.406 | 39.594 + 14.812 |
| 5 | 69.218 | 54.406 + 14.812 |
| 6 | 84.030 | 69.218 + 14.812 |
| 7 | 98.842 | 84.030 + 14.812 |
| 8 | 113.654 | 98.842 + 14.812 |
| 9 | 128.466 | 113.654 + 14.812 |
| 10 | 143.278 | 128.466 + 14.812 |
| ***Top grid*** | 158.090 | 143.278 + 14.812 |

The above can be used to determine appropriate NSPCR(I) values. However, for this calculation, approximate values are generated assuming that 10 intermediate and 1 top grid are distributed evenly over the active fuel region and in upper unfueled region (top grid is 158 inches, or 13 ft above ZCRL). This assumption gives:

NSPCR(1, 2) = 0,

NSPCR(3, 4, …, 12) = 1

### 4.2.2.2 Primary System (Parameter Group 2)

4.2.2.2.1 Clearance between fuel rods.

MAAP4 Parameter: XLGAP.

From Ref. 5, Table 2-1, Item 6a (Batch S): Rod Pitch is 0.506 in.

From Ref. 5, Table 2-1, Item 3a (Batch S): Pin O.D. is 0.382 in (same as XDPIN in MAAP3.0B parameter file).

XLGAP = Pitch – Pin OD = 0.506 – 0.382 = 0.124 in,

XLGAP = 0.0103 ft.

4.2.2.2.2 Total volume of one cold leg.

MAAP4 Parameter: VCL.

MAAP3.0B value (307.68 $ft^3$ [11]) revised to include volume of one S/G outlet nozzle. From Ref. 15, volume of one S/G outlet nozzle is 19 $ft^3$.

VCL = 307.68 $ft^3$ + 19 $ft^3$,

$$\boxed{VCL = 326.68\ ft^3}$$

4.2.2.2.3 Total volume of one hot leg.

MAAP4 Parameter: VHL.

MAAP3.0B value (145.26 $ft^3$ [11]) revised to include volume of RPV outlet nozzle and S/G inlet nozzle. From Ref. 15, the volume of the S/G inlet nozzle is 26 $ft^3$. Volume of one RPV outlet nozzle is ½(78.5) = 39.4 $ft^3$ ([11], Calc. 02-49).

VHL = 145.26 $ft^3$ + 26 $ft^3$ + 39.4 $ft^3$

$$\boxed{VHL = 210.66\ ft^3}$$

4.2.2.2.4 Total mass of one hot leg.

MAAP4 Parameter: MHLTOT.

MAAP3.0B value (3.226E4 lbm [11]) recalculated using hot leg wall thickness (XTHL) calculated below and new value of hot leg volume (VHL/VHL1) calculated above.

XTHL = HL Wall Thickness = 0.359 ft

VHL = Volume of hot leg (inside volume) = 210.66 $ft^3$

Nominal length of hot leg (based on inside volume):

$$XLHL = \frac{4 * VHL}{\pi (XDHL)^2}, \text{ where}$$

XDHL = Hot Leg ID = 3.5 ft ([11], calc. 2-02).

$$XLHL = \frac{4 * (210.66)}{\pi (3.5)^2} = 21.9\, ft.$$

To be consistent with MAAP, metal volume is calculated based on hot leg surface area and thickness:

$$VHLM = (\pi * XDHL * XLHL) XTHL = \pi (3.5)(21.9)(0.359),$$

VHLM = 86.26 $ft^3$.

MHLTOT is equal to the product of the metal mass (VHLM) and metal density. From material notes on CE RCS piping drawing 235-218 [13], hot leg metal is:

Base metal: Carbon steel SA 516 Grade 70.

Clad: Stainless Steel SA-240 Type 304.

For this calculation, MAAP nominal density for steel (8000 $kg/m^3$, or 499.36 $lbm/ft^3$) is used. Therefore,

MHLTOT = (499.36)(86.26),

| MHLTOT = 43,075 lbm |
|---|

4.2.2.2.5 Distance of SI nozzle above the elevation of the bottom of the cold leg, measured at the RPV inlet nozzle side. This parameter is in later (>Rev. 17) MAAP 3.0B files as ZSINOZ.

MAAP4 Parameter: ZSINOZ.

ZSINOZ = XDCL/2 for a non B&W plant, where

XDCL = cold leg pipe I.D,

(Ref. MAAP 3.0B Users Guide, Rev. 08/92.)

XDCL = 30 in (Ref. 11, Calc. 2-11 or Ref. 8, Table 5.3-2).

ZSINOZ = 30/2/12

| ZSINOZ = 1.25 ft |
|---|

4.2.2.2.6 Thickness of hot leg (thickness away from the inlet and outlet nozzles, <u>including</u> the cladding).

MAAP4 Parameter: XTHL.

Per UFSAR Table 5.3-2, [8], hot leg wall thickness is 4 5/16" = 4.3125 in = 0.3594 ft.

Per CE RCS piping drawing 235-218 [13], angled section of hot leg is 42" I.D. with 4 1/8" minimum wall thickness. Per UFSAR Table 5.2-3 [8], hot leg clad thickness is 3/16" nominal. Thus, the total wall thickness is 4 1/8 + 3/16 = 4 5/16", which agrees with UFSAR Table 5.3-2 and includes the clad thickness.

CE RCS piping drawing 235-218 [13] also shows a 3 3/4" minimum wall thickness for the straight section of the hot legs. For this section, the total wall thickness is 3 3/4 + 3/16 (clad) = 3 15/16", which is only 3/8" less than the UFSAR wall thickness. Thus the 4 5/16" value will be used here.

| XTHL = 0.359 ft |
|---|

4.2.2.2.7 Difference in elevation between the pump-side of the cold leg and the inlet nozzle side. Note: This parameter is already in later (>Rev. 17) versions of MAAP 3.0B files as ZOFFCL.

MAAP4 Parameter: ZOFFCL.

ANO-2 RCS elevation drawing [10] shows no elevation change in this region.

| ZOFFCL = 0.0 ft |
|---|

### 4.2.2.3 Pressurizer (Parameter Group 3)

Several changes/additions to the pressurizer group are required to implement revised MAAP4 Pressurizer Safety/Relief Valve (PSV) modeling. These changes are documented in Table 4.2.2. Two new geometric parameters are also added to MAAP4. Values of these parameters are calculated below.

4.2.2.3.1 Surge line wall thickness.

MAAP4 Parameter: XTSR.

Surge line piping is standard 12" SCH 160 [14]. Wall thickness corresponding to this pipe size is 1.312 in.

| XTSR = 0.109 ft |
|---|

4.2.2.3.2 Vertical height of surge line (difference in elevation of the nozzle coupling the hot leg and the surge line and the bottom of the pressurizer)

MAAP4 Parameter: XWSL

Define: EHL = elevation hot leg centerline,
DHL = inside diameter of hot leg,
THL = thickness of hot leg.
EPR = elevation of inside bottom of pressurizer.

Requested height is from the elevation of the hot leg surge line nozzle at the hot leg O.D. to the elevation of the bottom of the pressurizer.

EHL = 370'-10 ½" = 370.875' [10],
DHL = 42 in. (Table 5.3-2, Ref. 8),
THL = 4.3125 in. (previous calculation),
EPR = 380'-4" + (78 1/16" – 48 7/16")/12 = 382.80 ft [12].

XWSL = EPR – [EHL + ½(DHL) + THL],

XWSL = 382.8 –[370.875 + ½(42)/12 + (4.3125/12)]

$\boxed{\text{XWSL} = 9.82\ \text{ft}}$

### 4.2.2.4 Steam Generator (Parameter Group 13)

4.2.2.4.1 Total number of tubes in one S/G.

MAAP4 Parameter: NTSG.

MAAP3.0B value [11], updated to incorporate latest tube plugging data.

Using latest tube plugging data (as of 2R13 [20]): Number of tubes plugged is 1427 (S/G-A) and 1310 (S/G-B), for an average of 1369 plugged tubes for both S/G's. The total number of tubes per S/G is 8411 [15]. Therefore, the average number of unplugged tubes per S/G is:

NTSG = 8411 – 1369, or

$\boxed{\text{NTSG} = 7042}$

4.2.2.4.2 Total composite fluid volume for the primary side inlet and outlet plenums within one S/G (includes volume in tube sheet).

MAAP4 Parameter: VSGPHD.

MAAP3.0B value [11], updated to incorporate latest tube plugging data and to remove volume of inlet and outlet nozzles (now included in primary system parameters VCL and VHL/VHL1)

From Reference 15:

Total inlet/outlet plenum volume per S/G (VSGLH) = 457.6 $ft^3$.
(Above does not include nozzle volumes).

From previous calculation:

NTSG = 8411 – 1369 = 7042.

From MAAP3.0B parameter file ([11], Calc. 13-16):

XTSGTS = 21.5 in (tube sheet thickness),

Tube OD is 0.750" and tube thickness is 0.048". Tube inside radius is:

XRSGTI = 0.5*[0.750 – 2*(0.048)] = 0.327 in.

Using formula from MAAP3.0B Users Guide:

$\text{VSGPHD} = \text{VSGLH} + [2*\text{NTSG}*\pi*(\text{XRSGTI})^2*\text{XTSGTS}]$,

VSGPHD = 457.6 + [2*(7042)* $\pi$ * $(0.327/12)^2$ * (21.5/12)]

VSGPHD = 516.5 $ft^3$.

4.2.2.4.3 Total primary side fluid volume for one S/G.

MAAP4 Parameter: VSGPRI.

MAAP3.0B value ([11] updated to incorporate latest tube plugging data and remove volume of inlet and outlet nozzles (now included in primary system parameters VCL and VHL/VHL1).

From Reference 15:

Total U-tube volume per S/G assuming 8391 unplugged tubes (VSGTUB) = 1098.1 $ft^3$. (Above does not include nozzle volumes).

To estimate tube volume reduction due to plugged tubes, use Reference 15 tube plugging and volume data:

| | # Plugged Tubes | % Total (8391 tubes) | Plugged Volume (Vplug) | % Volume Reduction due to Plugged Tubes (Vr)* |
|---|---|---|---|---|
| S/G A | 1323 | 15.8 | 931.5 | 15.2 |
| S/G B | 1198 | 14.3 | 947.3 | 13.7 |

*Vr = [(VSGTUB – Vplug)/VSGTUB]*100 = [(1098.1 – Vplug)/1098.1]*100.

The above shows that a given % reduction in the number of tubes due to plugging results in a 0.6% lower reduction in tube volume for either S/G.

Using latest tube plugging data (as of 2R13 [20]) and applying this adjustment gives the plugged tube volume reduction (Vr) needed to calculate the plugged tube volume.

| | # Plugged Tubes | % Total (8391 tubes) | % Volume Reduction due to Plugged Tubes (Vr) |
|---|---|---|---|
| S/G A | 1427 | 17.0 | 17.0 – 0.6 = 16.4 |
| S/G B | 1310 | 15.6 | 15.6 – 0.6 = 15.0 |

Solving the above equation defining Vr for Vplug gives:

Vplug = VSGTUB (1 – Vr/100).

For S/G A: Vplug = 1098.1(1 - 0.164) = 918 $ft^3$.

For S/G B: Vplug = 1098.1(1 - 0.150) = 933.4 $ft^3$.

Average: Vplug = ½(918 + 933.4) = 925.7 $ft^3$.

Vplug is the estimated plugged tube volume in one S/G. Combining with the total inlet/outlet plenum volume per S/G (VSGLH) from the previous calculation:

VSGPRI = 457.6 + 925.7,

$$\boxed{\text{VSGPRI} = 1383.3\ \text{ft}^3.}$$

4.2.2.4.4 New parameters XLHLTS, MSWSG, and ASWSG.

These parameters are used in the hot leg natural circulation model. The values were calculated by Creare using S/G geometric data supplied in ANO-2 drawing 234-791 [17]. These parameters are defined and the calculated values shown in Table 4.2.2.

#### 4.2.2.5 Engineered Safeguards (Parameter Group 6)

The MAAP3.0B Engineered Safeguards parameter group is retained in the MAAP4 file with the following minor changes:

- Deletion of obsolete parameter FFCDB (containment fan cooler discharge flag), which is not used in MAAP4.
- Removal of Generalized ESF only parameters TDLP2, TDSPC, WSPCX, and WLP2X. These parameters were not used in the MAAP3.0B since Generalized ESF feature was not used. For MAAP4, the parameters were relocated to the Generalized ESF group and in this model the generic values are retained as placeholders.

#### 4.2.2.6 Initial Conditions (Parameter Group 10)

Changes to the MAAP3.0B Initial Conditions are limited to deletion of obsolete containment compartment initial condition parameters and revision of names of two parameters, TWPSNM (primary system initial water temperature, was TWPSI) and PPSNOM (initial primary system pressure, was PPSI). Values of these parameters are not changed.

#### 4.2.2.7 Fission Products (Parameter Group 17)

The MAAP3.0B Fission Products parameter group is appended to the MAAP4 file with no changes.

### 4.2.3 Model Parameters

ANO-2 specific values of selected Model Parameters from the generic MAAP4 Zion-like file are documented in Table 4.2.3 at the end of this section. Supporting calculations are provided below.

4.2.3.1 Friction coefficient for axial gas flow between core and upper plenum.

MAAP4 Parameter: FFRICR.

FFRICR is calculated using the following equation from the MAAP Users Guide:

FFRICR = 2.*(DP*RHO/WG**2)D/L, where

DP = core differential pressure,

RHO = primary system coolant density,

WG = care average mass flow per unit area,

D/L = equivalent diameter to length ratio.

The revised value of FFRICR is calculated by Creare using values of DP, WG, and RHO developed below.

Core Differential Pressure (DP):

Per UFSAR [8], Table 4.4-2, Cycle 12 (applicable to Cycle 14, per discussion for WG, below):

DP = 17.8 psi

Core flow rate (WG)

WG is the core mass flow rate corresponding to when DP is measured/calculated (typically four times MAAP parameter WPST(1)).

Total RCS flow rate (no tubes plugged) for Cycle 14 is 120.4 Mlbm/hr (322,000 gpm) [15], which is equal to 4 x WPST(1) value in the ANO-2 MAAP 3.0B parameter file (Calc. 2-35, Ref. 11). This is equal to the total core (active core + bypass) flow rate.

The Cycle 12 total RCS flow rate corresponding to the 17.8 psi core ΔP value above is also equal to 120.4 Mlbm/hr (Table 4.4-2 [8]). The corresponding active core flow rate is 116.2 Mlbm/hr, resulting in a core bypass flow fraction of 3.5% [=100% - (116.2/120.4)*100]. This bypass flow fraction is equal to the Cycle 14 bypass flow fraction given in Ref. 15.

Therefore, on the basis of the above discussion, the Cycle 12 core ΔP value (17.8 psi) corresponds to a core flow rate equal the Cycle 14 value and is therefore assumed applicable to Cycle 14. The corresponding core flow rate (assume core + bypass) is 120.6 Mlbm/hr, or

WG = 33,500 lbm/sec.

Fluid density (RHO)

RHO is based on core average temperature (presumably Tavg) and primary system pressure.

UFSAR Table 4.4-4 [8] gives a core coolant temperature of 584°F, which is nearly equal to the Table 5.1-1 value of Tavg (583°F). Therefore, assume average fluid temperature is equal to Tavg, or 583°F.

Primary system pressure is given by Initial Condition parameter PPS0 = 2250 psi [11].

From ASME Steam Tables, the density at 2250 psi, 583°F is:

RHO = 44.55 lbm/ft$^3$.

The final calculated value of FFRICR is:

| FFRICR = 0.11 |
|---|

4.2.3.2 Material type index for the pressurizer surge line.

MAAP4 Parameter: ICRPSR.

From Material notes on CE piping drawing 235-220 [14], surge line base metal is Stainless Steel SA-351 Gr. CF8M. This material is adequately represented by MAAP4 material type (ICRPSR) 1 (304 stainless steel).

| ICRPSR = 1 |
|---|

4.2.3.3 Deadbands (or, equivalently, percent blowdown) of main steam safety valves (MSSV'S).

MAAP4 Parameter: FEXTRA(299).

This parameter is added to MAAP4 and is the MSSV blowdown fraction (%). There are 10 Main Steam Safety Valves (MSSVs), 5 per SG, at ANO-2. ANO-2 Cycle 14 Groundrules [15] includes the following MSSV characteristics:

Nominal Setpoint (lowest pressure): 1078 psig.

Nominal Setpoint (highest pressure): 1132 psig.

Tolerance: +3%, -3% ($\pm$1% applies).*

Accumulation to fully open: 3%.

Blowdown to fully close: 5%.

*Per Ref. 16, Table 3.7-5, if the lift setpont is outside a $\pm$1% tolerance band, then the setting is adjusted to $\pm$1% tolerance.

Using the above data, the MSSV blowdown fraction is:

| FEXTRA(299) = 0.05 |
|---|

**Table 4.2.1 ANO-2 MAAP4 Parameter File Changes – Standard Changes For TI-SGTR Studies**

| PARAMETER | GENERIC VALUE* | UPDATED VALUE | DESCRIPTION/PURPOSE OF CHANGE | REF. CALC. NO. |
|---|---|---|---|---|
| IPTSMX<br>IPTSPK<br>IPTSAV | 500<br>10<br>150 | 750<br>300<br>10 | Change plot point spacing to ~60 sec if sequence runs 20,000 seconds (TI-SGTR case end time). | N/A |
| IUSETD | 1 | 0 | Use simple material drop model to overcome debris thermo. problems when first few KG relocate. | N/A |
| XDJETO | 0.1 M | 0.5 M | This is the initial diameter of the corium jet when it strikes the water surface in the vessel lower plenum. Increasing this value >0.1 reduces the steaming rate from the debris compared to the base value (can have problems when slump in no LOCA sequences). | N/A |
| ISBNOD | 1 | 0 | Disable subnodal physics model (no need to expend time on containment subnodal physics). | N/A |
| NPKNOD | 0 | 0.0 | Flag set to use 1D parameters to calculate core power peaking factors (unchanged from Zion-like file). | N/A |
| FPPORV | 0 | 0 | Pressurizer PORV power flag. Set to 0 for AC powered (unchanged from generic Zion file). See also Table 4.2.2, pressurizer group parameters. | N/A |
| AINPUT | 100 | 0 | Pressurizer PORV and safety valves flow area calculation flag. Set to 0 for code calculated flow area based on user-input valve nominal flow rate (if AINPUT > 1, use user input area). See also Table 4.2.2, pressurizer group parameters. | N/A |
| FAOUT | 0.3 | 0.5 | Fraction of S/G tubes carrying "out" flow in the natural circulation model. Revised value per transient EPRI/NRC/W tests. | N/A |
| FERSGT | 10 | 0.5 | Ratio of S/G original hot tube thickness to current thickness. 0.5 is a rough measure of effect of corrosion on S/G tube rupture. (Note: Not used for rupture probability.) | N/A |
| TDMAX | 20.0 sec | 5.0 sec | Maximum MAAP time step. Obtain somewhat more consistent performance if max time step limited. | N/A |

*Value in generic Zion-like PWR parameter file.

**Table 4.2.1 (cont'd) ANO-2 MAAP4 Parameter File Changes – Standard Changes For TI-SGTR Studies**

| PARAMETER | GENERIC VALUE* | UPDATED VALUE | DESCRIPTION/PURPOSE OF CHANGE | REF. CALC. NO. |
|---|---|---|---|---|
| ICRPHL | 2 | 2. | Hot leg material type index – set to 2 here, but MAAP creep rupture model too conservative for CE plants (use separate subroutine instead). | N/A |
| FHLCRE | 0.0 | 0.0 | MAAP hot leg creep rupture model selection: Set to 0.0 (unchanged from generic) – deactivates subnodal physics model (=1 or 2) since separate subroutine will be used. | N/A |
| FEXTRA(291)* | N/A | 1.0 | Use 1.0 to turn off internal natural convection in hot leg (used in all ANO-2 calculations for conservatism). Used by subroutine HTSHCR. | N/A |
| FEXTRA(298) | N/A | 1.0 | Use 1.0 to turn off divider plate heat transfer (particularly expedient for CE plants, which have substantial mass and air gap to limit heat transfer between SG inlet and outlet). Used by subroutine HLNC. | N/A |
| FEXTRA(297) | N/A | 0 | Use 1.0 to turn off counter-current hot leg heat transfer (not used in ANO-2 calculations). Used by subroutine HLNC. | N/A |
| FEXTRA(296) | N/A | 0 | Use 1.0 or 1.E-4 (<1.0) to specify condensation rate multiplier on accumulator water for NRC comparison calculations (not used in ANO-2 calculations). | N/A |

*FEXTRA is an extra array carried in the MAAP4 common blocks. FEXTRA parameters were used by Creare to develop I/O for modified subroutines. (See also Figure 4.1.2.)

**Table 4.2.2 ANO-2 MAAP4.0.3 Parameter File Changes – Changes To Selected ANO-2 MAAP3.0B Groups**

| PARAMETER | ANO-2 VALUE* | UPDATED VALUE | DESCRIPTION/PURPOSE OF CHANGE | REF. CALC. NO. |
|---|---|---|---|---|
| *Core (Parameter Group 14)* | | | | |
| MZR0C | 39899.44 lbm | 39899.44 lbm | Initial Zr Mass: Value unchanged (parameter name changed from MZR0). | N/A |
| NAXNOD | 10 | 12 | Number of axial core nodes – added two rows at bottom to represent unfueled regions, including core support plate. Continue to use one row at top for unfueled region above top of active fuel. | 4.2.2.1.1 |
| FPA(I) | - | - | Defines axial peaking factors, where I = axial node (bottom to top). Changed values for bottom two nodes (I=1,2) to 0.0 for new nonfueled region. Existing values of peaking factors unchanged, but index shifted by 2. | N/A |
| FALPHA | 0.3 | 1.3 | Add 1.0 due to parameter definition change implemented for MAAP3.0B Rev. 19. | N/A |
| NNFT | New | 1 | Number of nonfueled rows above active core: New parameter, value consistent with NAXNOD. | 4.2.2.1.2 |
| NNFB | New | 2 | Number of nonfueled rows below active core: New parameter, value consistent with NAXNOD. | 4.2.2.1.2 |
| XDZNFB(I), I = 1, NNFB | New | 0.3165 ft | Length of nonfueled rows below active core (new parameter). | 4.2.2.1.3 |
| XDZNFT(I), I = 1, NNFT | New | 1.96 ft | Length of nonfueled rows above active core (new parameter). | 4.2.2.1.4 |
| MSSNFB(1) | New | 8675 lbm | Mass of stainless steel in bottom nonfueled support plate region below active core (Replaces MAAP3.0B parameter MCSP0). | 4.2.2.1.5(b) |
| MSSNFB(2) | New | 0.0 lbm | Mass of stainless steel in bottom nonfueled fuel rod region below active core. | 4.2.2.1.5(a) |
| MZRNFB(1) | New | 0.0 lbm | Mass of Zircaloy in bottom nonfueled support plate region below active core. | 4.2.2.1.5(b) |
| MZRNFB(2) | New | 678 lbm | Mass of Zircaloy in bottom nonfueled fuel rod region below active core. | 4.2.2.1.5(a) |

* Value from ANO-2 MAAP3.0B file ([11], [19])

**Table 4.2.2 (cont'd) ANO-2 MAAP4.0.3 Parameter File Changes – Changes To Selected ANO-2 MAAP3.0B Groups**

| PARAMETER | ANO-2 VALUE* | UPDATED VALUE | DESCRIPTION/PURPOSE OF CHANGE | REF. CALC. NO. |
|---|---|---|---|---|
| MSSNFT(1) | New | 1347 lbm | Mass of stainless steel in top nonfueled region above active core. | 4.2.2.1.6 |
| MZRNFT(2) | New | 2566.4 lbm | Mass of Zircaloy in top nonfueled region above active core. | 4.2.2.1.6 |
| NGASU | New | 12 | Index of axial row having the fuel rod upper gas plenum. Value is equal to NAXNOD. | N/A |
| NGASL | New | 2 | Index of axial row having the fuel rod lower gas plenum. Row 2 contains lower gas plenum, row 1 the CSP. | N/A |
| NPLAT | New | 1 | Index of axial row having the Core Support Plate (CSP). Row 2 contains lower gas plenum, row 1 the CSP. | N/A |
| NCROD | New | 405 | Total number of control rods in core. | 4.2.2.1.8 |
| NROWS | New | 15 | Number of rows/fuel assembly. | 4.2.2.1.7 |
| NSPCR(I), I = 1,NAXNOD | New | NSPCR(1) = 0<br>NSPCR(2) = 0<br>NSPCR(3) = 1<br>.<br>.<br>.<br>NSPCR(12) = 1 | Grid spacer index (bottom to top). Approximate values assuming even grid distribution. | 4.2.2.1.9 |
| ***Primary System (Parameter Group 2)*** | | | | |
| XLGAP | 0.0103 ft | 0.0103 ft | Clearance between fuel rods. Recalculated for Cycle 14 (value unchanged). | 4.2.2.2.1 |
| VCL | 307.68 $ft^3$ | 326.68 $ft^3$ | Volume of one cold leg. Add volume of 1 S/G outlet nozzle for MAAP4. | 4.2.2.2.2 |
| VHL | 145.26 $ft^3$ | 210.66 $ft^3$ | Volume of one hot leg. Add volume of S/G inlet and RPV outlet nozzles for MAAP4. | 4.2.2.2.3 |
| WGRXVO | 0.0 lbm/hr | Deleted | Removed for MAAP4. | N/A |
| VHL1 | 196.13 $ft^3$ | 210.66 $ft^3$ | Volume of horizontal runs of hot leg. Same as VHL. | N/A |
| MHLTOT | 32,260 lbm | 43,075 lbm | Total mass of one hot leg. Add volume of 1 S/G outlet nozzle for MAAP4. | 4.2.2.2.4 |
| ZSINOZ | New | 1.25 ft | Distance of SI nozzle above the elevation of the bottom of the cold leg. | 4.2.2.2.5 |

**Table 4.2.2 (cont'd) ANO-2 MAAP4.0.3 Parameter File Changes – Changes To Selected ANO-2 MAAP3.0B Groups**

| PARAMETER | ANO-2 VALUE* | UPDATED VALUE | DESCRIPTION/PURPOSE OF CHANGE | REF. CALC. NO. |
|---|---|---|---|---|
| ZOFFCL | New | 0.0 ft | Difference in elevations between the pump side of the cold leg and the inlet nozzle side. This parameter was already in later (>Rev. 17) revisions of MAAP3.0B, but not in the ANO-2 file. | 4.2.2.2.7 |
| XTHL | New | 0.359 ft | Thickness of hot leg. | 4.2.2.2.6 |
| ***Pressurizer (Parameter Group 3)*** | | | | |
| XTSR | New | 0.109 ft | Surge line wall thickness. | 4.2.2.3.1 |
| XWSL | New | 9.82 ft | Vertical distance between hot leg and bottom of pressurizer. | 4.2.2.3.2 |
| NPZCT<br>ZWPZCL<br>ZWPZCH | 1<br>0.0 m<br>1.0E10 m | 0<br>0.0 m<br>1.E10 m | These parameters control pressurizer level and were included in MAAP3.0B but were not used (ANO-2 model retained generic values as placeholders). New values shown here are also included as placeholders. | N/A |
| NPZRV | New | 2 | Number of pressurizer safety/relief valves. The ANO-2 pressurizer has two Safety Valves (PSVs) and no PORVs (relief valves). This parameter replaces MAAP3.0B parameters NPZSV and NPORV. | N/A |
| NIPORV(I), I=1,NPZRV | New | 0 | Flag indicating whether the I'th valve is a PORV (=1) or safety valve (=0). Set to 0 to model the two PSVs. | N/A |
| FPPORV | New | 0 | Flag indicating power source for PORVs. Use placeholder value of 0 since there are no PORVs. | N/A |
| AINPUT | New | 0 | Flag indicating how PORV and safety valve flow areas are calculated. Set to zero so that MAAP calculates PSV flow area based on nominal flow rates (same as in MAAP3.0B). | N/A |
| ASRV(I), I=1,NPZRV | New | 0.0 $ft^2$ | Flow area of I'th PSV. Set to zero since MAAP calculates flow area for both PSVs (see AINPUT, above). | N/A |
| PSETSV(I), I=1,NPZRV | New | 2475 psia (I=1)<br>2525 psia (I=2) | Opening set pressures for the two PSVs. Values are from MAAP3.0B parameters PPZSVL and PPZSVH. This parameter replaces PPZSVL, which has been redefined for MAAP4, and PPZSVH. | N/A |

**Table 4.2.2 (cont'd) ANO-2 MAAP4.0.3 Parameter File Changes – Changes To Selected ANO-2 MAAP3.0B Groups**

| PARAMETER | ANO-2 VALUE* | UPDATED VALUE | DESCRIPTION/PURPOSE OF CHANGE | REF. CALC. NO. |
|---|---|---|---|---|
| PSETRV(I), I=1,NPZRV | New | 1.E10 psia (I=1,2) | Opening set pressures for relief mode set to high value to disable relief mode function (since there are no PORVs). This parameter replaces PPORVL, which has been redefined for MAAP4, and PPORVH. | N/A |
| PDSV(I), I=1,NPZRV | New | 248.3 psi (I=1,2) | Deadband on the two PSVs. Values are from MAAP3.0B parameter PDEADS. This parameter replaces PDEADS. | N/A |
| PDRV(I), I=1,NPZRV | New | 1.369E5 Pa (I=1,2) | Deadband on relief valves (PORVs). Use placeholder values from the generic Zion-like parameter file since there are no PORVs. This parameter replaces MAAP3.0B parameter PDEAD. | N/A |
| PPZSVL | 2475 psia | 2475 psia | This parameter is redefined as the reference opening pressure of a PSV at nominal PSV flowrate WPZSV0 (was lowest PSV opening setpoint). MAAP3.0B value provides reasonable estimate and is retained unchanged. | N/A |
| PPORVL | 2800 psia | 2800 psia | This parameter is redefined as the reference opening pressure of a PORV at nominal PORV flowrate WPORV0 (was lowest PORV opening setpoint). MAAP3.0B value retained as placeholder since there are no PORVs. | N/A |
| ***Steam Generators (Parameter Group 13)*** | | | | |
| NTSG | 8411 | 7042 | Number of tubes per S/G. Revised to reflect latest tube plugging data. | 4.2.2.4.1 |
| PSGRV | 2000 psia | 1200 psia | Opening set pressure of S/G PORVs (secondary relief valves). Value is adjusted down to remain high enough to prevent actuation while avoiding gross alteration of value of throat area calculation. | N/A |
| VSGPHD | 803 $ft^3$ | 516.5 $ft^3$ | Total volume of S/G primary side inlet and outlet plenums. Removed volumes of inlet and outlet nozzles as these are now included in hot and cold leg volume parameters. | 4.2.2.4.2 |
| VSGPRI | 1901 $ft^3$ | 1383.3 $ft^3$ | Total volume of S/G primary side. Removed volumes of inlet and outlet nozzles (included in hot and cold leg volume parameters) and revised to reflect latest tube plugging data. | 4.2.2.4.3 |

**Table 4.2.2 (cont'd) ANO-2 MAAP4.0.3 Parameter File Changes – Changes To Selected ANO-2 MAAP3.0B Groups**

| PARAMETER | ANO-2 VALUE* | UPDATED VALUE | DESCRIPTION/PURPOSE OF CHANGE | REF. CALC. NO. |
|---|---|---|---|---|
| NZPTS<br>VOFZSG(I)<br>ZOFSG(I),<br>I = 1,NZPTS | New | 5<br>---- | These parameters define the S/G secondary volume vs. height table. Values input are by Creare and reflect a similar CE plant. This table is not critical in the TI-SGTR sequences run since no sequences involved EFW overfill or late dryout from nearly full conditions. The parameter values are as follows:<br>I VOFZSG(I) ZOFSG(I)<br>1 0.0 0.0<br>2 1560. 19.9<br>3 3500 31.1<br>4 4620 35.1<br>5 9205 50.15 | N/A |
| DMSL | New | 2.83 ft | Main steam line I.D. Value is a generic one used by Creare but compares well to ANO-2 value of 38", or 3.17 ft [11]. | N/A |
| VOLP | New | 910 $ft^3$ | Volume of a portion of the main steam line as defined in the MAAP4 generic parameter file. Value is a generic one input by Creare. VOLP should be 10% of S/G parameter VSG. VSG value for ANO-2 is 9634 $ft^3$ [11]. VOLP value used is 9.4% of VSG. | N/A |
| XLHLTS | New | 3.6 ft | Vertical distance from centerline of hot leg to tube sheet. Calculated by Creare based on radius of 75" at 35° per ANO-2 SG drawing 234-791 [17]. | 4.2.2.4.4 |
| MSWSG | New | 35,000 lbm | Mass of hot leg side of S/G wall below the tube sheet in the inlet plenum. Value calculated by Creare using data from ANO-2 SG drawing 234-791 [17]. | 4.2.2.4.4 |
| ASWSG | New | 100 $ft^2$ | Heat transfer area of the hot leg side of S/G wall below the tube sheet in the inlet plenum. Value calculated by Creare using data from ANO-2 SG drawing 234-791 [17]. | 4.2.2.4.4 |
| ***Engineered Safeguards (Parameter Group 6)*** | | | | |
| FFCDB | 0 | Deleted | Indication flag for containment fan cooler discharge – obsolete for MAAP4 | 4.2.2.5 |
| TDLP2<br>TDSPC<br>WSPCX<br>WLP2X | 1000.0 hr<br>1000.0 hr<br>1.E6 lbm/hr<br>1.E6 lbm/hr | 5 sec<br>5 sec<br>1.E10 kg/s<br>1.E10 kg/s | Generalized ESF model parameters have been moved to the Generalized ESF section in MAAP4. MAAP3.0B values are placeholders as the Generalized ESF model was not used. For MAAP4, the generic values from the Zion-like model are used as placeholders. | 4.2.2.5 |

**Table 4.2.2 (cont'd) ANO-2 MAAP4.0.3 Parameter File Changes – Changes To Selected ANO-2 MAAP3.0B Groups**

| PARAMETER | ANO-2 VALUE* | UPDATED VALUE | DESCRIPTION/PURPOSE OF CHANGE | REF. CALC. NO. |
|---|---|---|---|---|
| ***Initial Conditions (Parameter Group 10)*** | | | | |
| TWPSNM | 583°F | 583°F | Initial primary system water temperature – parameter renamed (was TWPSI), but value not changed. | 4.2.2.6 |
| PPSNOM | 2250 psia | 2250 psia | Initial primary system pressure – parameter renamed (was PPSI), but value not changed. | 4.2.2.6 |
| PB0<br>TGB0<br>TGI0<br>FRHB0<br>MICE0<br>TGA0<br>FRHA0 | 14.7 psia<br>120°F<br>0.0°F<br>0.53<br>0<br>120.0°F<br>0.53 | Deleted | Removed these MAAP3.0B containment parameters – obsolete for MAAP4.. | 4.2.2.6 |

**Table 4.2.3 ANO-2 MAAP4.0.3 Parameter File Changes –Model Parameters**

| PARAMETER | ANO-2 VALUE* | UPDATED VALUE | DESCRIPTION/PURPOSE OF CHANGE | REF. CALC. NO. |
|---|---|---|---|---|
| FFRICR | 0.034 | 0.11 | Friction coefficient for axial gas flow between core and upper plenum. Revised value calculated by Creare using updated inputs. | 4.2.3.1 |
| ICRPSR | New | 1 | Material type index for pressurizer surge line – 1 corresponds to 304 stainless steel. | 4.2.3.2 |
| EG | 0.6 | 0.65 | Emissivity of gas. Typical value specified here. Exact value for each accident sequence is calculated by HRAD code and input via local parameter changes in accident sequence input files. Value is also varied for radiation sensitivity calculations. | N/A |
| EWL | 0.85 | 0.65 | Emissivity of walls. Typical value specified here (see above discussion for EG). | N/A |
| FEXTRA(299) | New | 0.05 | Deadband (blowdown fraction) for S/G (main steam) safety valves. | 4.2.3.3 |

* Value from ANO-2 MAAP3.0B file ([10], [18])

## 4.3 Development of MAAP4 Input Files

This section documents development of the MAAP4 accident sequence input files (*.inp*). Input files for each phenomenological sequence analyzed in the TI-SGTR study were prepared using the procedure in EPRI TR-107623 [1]. The input files define the transient progression for each sequence (including accident initiators). Input parameter changes unique to each sequence are also defined in the input files via the local parameter change option. The accident sequences and variations are defined in Section 4.1 and the input file naming convention is provided in Table 4.1.1. The input files are stored in "zip" files in Attachment A using the input file name.

Note: All sequences are terminated at reactor vessel failure or at 20,000 secs after initiation for sequences with no vessel failure.

### 4.3.1 High/Dry/High Sequences

The high/dry/high sequences involve high RCS pressure (i.e., above the shutoff head of the ECCS injection pumps), dry SG secondary (i.e., loss of all feedwater), and high secondary pressure (secondary relief valves fail to open). These sequences are initiated by a station blackout (loss of AC power). SBO is the only accident initiator needed to generate the high/dry/high sequence. Parameter changes unique to each sequence variation are implemented via local parameter changes. The local parameter changes are documented in Table 4.3.1.

### 4.3.2 High/Dry/Low Sequences

The high/dry/low sequences are the same as high/dry/high except that the B-loop SG secondary is depressurized. These sequences are initiated by a station blackout (loss of AC power). The B-loop SG is depressurized by a sticking open a relief valve as soon as the first safety valve opens. The safety valve opens when secondary pressure reaches the lowest opening setpoint of the secondary relief valves (parameter PSGSVL = 1081.92 psia). The flow rate of the stuck open relief valve (WSGRV0) is set equal to 94.36 kg/s (7.5E5 lbm/hr). New I/O parameter FEXTRA(301) is used to detect the first opening of the B-loop safety valve (FEXTRA(301) counts the number of B-loop SG safety valve lifts). Thus, in the input file, when FEXTRA(301) $\geq$ 0.5, the B-loop relief valve is stuck open. Local parameter changes to implement this sequence and the sensitivity cases are documented in Table 4.3.2.

### 4.3.3 High/Dry/Medium Sequences

The high/dry/medium sequences are the same as high/dry/low except that both SG's are depressurized to ~550 psia at 3000 secs after transient initiation. These sequences are initiated by an effective station blackout (loss of AC power). The SBO is simulated by turning off affected systems manually (rather than via the Loss of AC Power flag used in the previous sequences). The input file commands to perform this operation are listed below.

```
MCP SWITCH OFF OR HI-VIBR TRIP
HPI FORCED OFF
LPI FORCED OFF
FANS/COOLERS FORCED OFF
PZR HTRS FORCED OFF
MANUAL SCRAM
MAIN FW SHUT OFF
CHARGING PUMPS FORCED OFF
LETDOWN SWITCH OFF
ESF UPPER/LOWER COMPT. SPRAYS FORCED OFF
MOTOR-DRIVEN AUX FEED WATER FORCED OFF
```

The SG's are depressurized by manually opening a relief valve on both SG's at transient time 3000 secs. This is accomplished by lowering the relief valve setpoint (PSGRV) to 3.8E6 Pa, or 550 psia, at 3000 secs. With this setpoint change, the SG relief valves open and cycle to maintain SG secondary pressure at the targeted 550 psia. The local parameter changes needed to implement this sequence and the sensitivity cases are documented in Table 4.3.3.

### 4.3.4 Medium/Dry/Low Sequences

The medium/dry/low sequences are the same as high/dry/low except that the primary system (RCS) is depressurized through the high point vent valves. The high point vents depressurize and subsequently maintain the primary system at ~1400 psia 1800 secs after transient initiation. These sequences are initiated by a station blackout (loss of AC power). The RCS is depressurized by manually opening a new primary system relief valve (PORV) at 1800 secs. The valve pressure opening setpoint (PSETRV(3)) is set to 9.65E6 Pa, or 1400 psia. With this setpoint, the valve will cycle to maintain RCS pressure at the targeted 1400 psia. Similar to the high/dry/low sequences, the B-loop SG is depressurized by a sticking open a relief valve. However, in these sequences, the relief valve is stuck open at the second opening of the safety valves. As discussed above, new I/O parameter FEXTRA(301) counts the number of B-loop SG safety valve lifts. Therefore, the B-loop relief valve is stuck open when FEXTRA(301) > 1, which corresponds to the second safety valve lift. Local parameter changes to implement this sequence and the sensitivity cases are documented in Table 4.3.4.

### 4.3.5 Cleared B-Loop Seal with Pressurized Steam Generators

This is a high/dry/high sequence with spontaneous clearing of the broken (B) cold leg loop seal after the core uncovers. The reactor vessel water level is also assumed to drop quickly below the bottom of the downcomer (i.e., core barrel clears). Both steam generators remained pressurized, as does the RCS (primary system).

These sequences are initiated by an effective station blackout (loss of AC power). The SBO is simulated in these sequences by turning off affected systems manually (rather than via the Loss of AC Power flag) so that the B-loop Reactor Coolant Pumps (RCPs) can be bumped to clear the downcomer. The input file commands to perform this operation are listed below.

```
MCP SWITCH OFF OR HI-VIBR TRIP
HPI FORCED OFF
LPI FORCED OFF
FANS/COOLERS FORCED OFF
PZR HTRS FORCED OFF
MANUAL SCRAM
MAIN FW SHUT OFF
CHARGING PUMPS FORCED OFF
LETDOWN SWITCH OFF
ESF UPPER/LOWER COMPT. SPRAYS FORCED OFF
MOTOR-DRIVEN AUX FEED WATER FORCED OFF
```

Loop seal clearing is accomplished as follows. When the downcomer water level (ZWDC) decreases to near the bottom of the core (ZWDC < 4 m, or 13.12 ft, above bottom of vessel is used*), the RCPs are manually bumped on for 20 seconds. Bumping the RCPs clears the broken cold leg loop seals. The core barrel is also forced to clear (i.e., bottom of core barrel is uncovered) by setting new I/O parameter

*The elevation of bottom of active fuel is 9.5 ft per core parameter ZCRL. Initiating loop seal and core barrel clearing when ZWDC < 13.14 ft, or ~3.6 ft above BAF, anticipates level decrease inside the core barrel and provides reasonable results. The ZWDC setpoint was established by Creare.

FEXTRA(294) = 2 in subroutine EVENTS (see Figure 4.1.2). These two events result in development of a unidirectional gas flow path around the broken loop. The local parameter changes that implement the base sequence and the two sensitivity cases for cleared loop seals are documented in Table 4.3.5.

### 4.3.6 Cleared B-Loop Seal with B-Loop Steam Generator Depressurized

These sequence are the same as the previous cleared loop seal cases except that the SG in the affected (broken, or B-loop) is depressurized. Transient initiation and loop seal clearing is accomplished as described in Section 4.3.5, above. The B-loop SG is depressurized by sticking open an atmospheric dump valve (ADV) as soon as the first safety valve opens. The safety valve opens when secondary pressure reaches the lowest opening setpoint of the secondary relief valves (parameter PSGSVL = 1081.92 psia). New I/O parameter FEXTRA(301) is used to detect the first opening of the B-loop safety valve (FEXTRA(301) counts the number of B-loop SG safety valve lifts). Thus, in the input file, when FEXTRA(301) $\geq$ 0.5, the B-loop ADV is stuck open by changing the broken loop dump valve area fraction (FARVBX) from 0. to 1. The ADV flow rate (WSGRV0) is equal to 1.64E6 lbm/hr (per Ref. 11, Calc. 13-14). Local parameter changes to implement this sequence and the sensitivity cases are the same as those for the previous cleared loop seal case and are documented in Table 4.3.5.

### 4.3.7 Cleared B-Loop Seal with U-Loop Steam Generator Depressurized

These sequence are the same as the previous cleared loop seal cases except that the SG in the unaffected (unbroken, or U-loop) is depressurized. Transient initiation and loop seal clearing is accomplished as described in Section 4.3.5. The U-loop SG is depressurized by sticking open an atmospheric dump valve (ADV) as soon as the first safety valve opens per I/O parameter FEXTRA(301) (see Section 4.3.6). The U-loop ADV is stuck open by changing the unbroken loop dump valve area fraction (FARVUX) from 0. to 1. Local parameter changes to implement this sequence and the sensitivity cases are the same as those for the previous cleared loop seal cases and are documented in Table 4.3.5.

**Table 4.3.1 MAAP4 Input File Local Parameter Changes – High/Dry/High Sequences***

| PARAMETER | VALUE | DESCRIPTION/PURPOSE OF CHANGE |
|---|---|---|
| ***All Cases (except prahi, pradlo)*** | | |
| EG | 0.64 | Gas emissivity: Improved value calculated by HRAD (cf. Table 4.1.6). |
| EW | 0.64 | Wall emissivity: Improved value calculated by HRAD (cf. Table 4.1.6). |
| ***High hot leg radiation (pradhi)*** | | |
| EG | 0.83 | Gas emissivity: Value is 130% of nominal (base value).** |
| EWL | 0.83 | Wall emissivity: Value is 130% of nominal (base value).** |
| ***Low hot leg radiation (pradlo)*** | | |
| EG | 0.38 | Gas emissivity: Value is 60% of nominal (base value).** |
| EWL | 0.38 | Wall emissivity: Value is 60% of nominal (base value).** |
| ***Low SG/Hot Leg Natural Circulation Flow (pwratlo)*** | | |
| FAOUT | 0.35 | Fraction of SG tubes carrying out flow in the hot leg NC model: Value is 70% of nominal (base case) value (0.5). |
| ***Low SG Inlet Plenum Mixing (pmxlo)*** | | |
| FEXTRA(260) | 0.070 | Redefine parameter "alpha" in hot leg natural circulation plume model in subroutine HLNC (base value is 0.085). By Creare Engineering. |
| ***High SG Inlet Plenum Mixing (pmxhi)*** | | |
| XLHLTS | 1.34 M | Vertical distance between bottom of SG tube sheet and hot leg centerline at the SG plenum. Used in natural circulation model in subroutine HLNC. Base value is 3.6 ft (1.1 M). By Creare Engineering. |
| ***Best Combination of Phenomenon (pbest)*** | | |
| EG | 0.83 | See above. |
| EWL | 0.83 | |
| XLHTS | 1.34 M | |
| ***Worst Combination of Phenomenon (pworst)*** | | |
| EG | 0.38 | See above. |
| EWL | 0.38 | |
| FEXTRA(260) | 0.070 | |
| FAOUT | 0.35 | |

*This table includes only parameter changes relative to values in the parameter file (*ano2.par*). Parameter changes in the input files that are not used in the sequence (e.g., WSGRV0) are not included.

**The hot leg radiation sensitivity cases for all accident sequences use emissivity variations of 130% and 60% of the nominal (base case) values. This compares to the 150%/50% variation for these cases cited in Table 4.1.4. The impact on the calculations of this difference is negligible.

**Table 4.3.2 MAAP4 Input File Local Parameter Changes – High/Dry/Low Sequences***

| PARAMETER | VALUE | DESCRIPTION/PURPOSE OF CHANGE |
|---|---|---|
| ***All Cases (except rahi, radlo)*** | | |
| EG | 0.67 | Gas emissivity: Improved value calculated by HRAD (cf. Table 4.1.6). |
| EW | 0.67 | Wall emissivity: Improved value calculated by HRAD (cf. Table 4.1.6). |
| ***All Cases*** | | |
| WSGRV0 | 94.36 kg/s | SG relief valve flow rate. A nominal value (=7.5E5 lbm/hr) by Creare Engineering is specified. This value results in the desired SG blowdown/depressurization. |
| ***High hot leg radiation (radhi)*** | | |
| EG | 0.86 | Gas emissivity: Value is 130% of nominal (base value). |
| EWL | 0.86 | Wall emissivity: Value is 130% of nominal (base value). |
| ***Low hot leg radiation (radlo)*** | | |
| EG | 0.4 | Gas emissivity: Value is 60% of nominal (base value). |
| EWL | 0.4 | Wall emissivity: Value is 60% of nominal (base value). |
| ***Low SG/Hot Leg Natural Circulation Flow (wratlo)*** | | |
| FAOUT | 0.35 | Fraction of SG tubes carrying out flow in the hot leg NC model: Value is 70% of nominal (base case) value (0.5). |
| ***Low SG Inlet Plenum Mixing (mxlo)*** | | |
| FEXTRA(260) | 0.070 | Redefine parameter "alpha" in hot leg natural circulation plume model in subroutine HLNC (base value is 0.085). By Creare Engineering. |
| ***High SG Inlet Plenum Mixing (mxhi)*** | | |
| XLHLTS | 1.34 M | Vertical distance between bottom of SG tube sheet and hot leg centerline at the SG plenum. Used in natural circulation model in subroutine HLNC. Base value is 3.6 ft (1.1 M). By Creare Engineering. |
| ***Best Combination of Phenomenon (best)*** | | |
| EG | 0.86 | See above. |
| EWL | 0.86 | |
| XLHTS | 1.34 M | |
| ***Worst Combination of Phenomenon (worst)*** | | |
| EG | 0.4 | See above. |
| EWL | 0.4 | |
| FEXTRA(260) | 0.070 | |
| FAOUT | 0.35 | |

*This table includes only parameter changes relative to values in the parameter file (*ano2.par*).

**Table 4.3.3 MAAP4 Input File Local Parameter Changes – High/Dry/Medium Sequences***

| PARAMETER | VALUE | DESCRIPTION/PURPOSE OF CHANGE |
|---|---|---|
| ***All Cases (except rahi3, radlo3)*** | | |
| EG | 0.64 | Gas emissivity: Improved value calculated by HRAD (cf. Table 4.1.6). |
| EW | 0.64 | Wall emissivity: Improved value calculated by HRAD (cf. Table 4.1.6). |
| ***All Cases*** | | |
| WSGRV0 | 94.36 kg/s | SG relief valve flow rate. Nominal value (=7.5E5 lbm/hr) by Creare Engineering (see Table 4.3.2). |
| PSGRV | 3.8E6 Pa | SG relief valve opening setpoint (= 550 psia). This change is implemented at 3000 secs to depressurize the SG's to the target 550 psia secondary pressure. |
| ***High hot leg radiation (radhi3)*** | | |
| EG | 0.83 | Gas emissivity: Value is 130% of nominal (base value). |
| EWL | 0.83 | Wall emissivity: Value is 130% of nominal (base value). |
| ***Low hot leg radiation (radlo3)*** | | |
| EG | 0.38 | Gas emissivity: Value is 60% of nominal (base value). |
| EWL | 0.38 | Wall emissivity: Value is 60% of nominal (base value). |
| ***Low SG/Hot Leg Natural Circulation Flow (wratlo3)*** | | |
| FAOUT | 0.35 | Fraction of SG tubes carrying out flow in the hot leg NC model: Value is 70% of nominal (base case) value (0.5). |
| ***Low SG Inlet Plenum Mixing (mxlo3)*** | | |
| FEXTRA(260) | 0.070 | Redefine parameter "alpha" in hot leg natural circulation plume model in subroutine HLNC (base value is 0.085). By Creare Engineering. |
| ***High SG Inlet Plenum Mixing (mxhi3)*** | | |
| XLHLTS | 1.34 M | Vertical distance between bottom of SG tube sheet and hot leg centerline at the SG plenum. Used in natural circulation model in subroutine HLNC. Base value is 3.6 ft (1.1 M). By Creare Engineering. |
| ***Best Combination of Phenomenon (best3)*** | | |
| EG | 0.83 | See above. |
| EWL | 0.83 | |
| XLHTS | 1.34 M | |
| ***Worst Combination of Phenomenon (worst3)*** | | |
| EG | 0.38 | See above. |
| EWL | 0.38 | |
| FEXTRA(260) | 0.070 | |
| FAOUT | 0.35 | |

*This table includes only parameter changes relative to values in the parameter file (*ano2.par*).

**Table 4.3.4 MAAP4 Input File Local Parameter Changes – Medium/Dry/Low Sequences***

| PARAMETER | VALUE | DESCRIPTION/PURPOSE OF CHANGE |
|---|---|---|
| ***All Cases (except midrahi, midradlo)*** | | |
| EG | 0.64 | Gas emissivity: Improved value calculated by HRAD (cf. Table 4.1.6). |
| EW | 0.64 | Wall emissivity: Improved value calculated by HRAD (cf. Table 4.1.6). |
| ***All Cases*** | | |
| WSGRV0 | 94.36 kg/s | SG relief valve flow rate. Nominal value (=7.5E5 lbm/hr) by Creare Engineering (see Table 4.3.2). |
| *Note: The following changes define the primary system relief valve (pressurizer PORV) used to simulate the action of reactor vessel high point vents to depressurize the RCS.* | | |
| FPPORV | 2 | Power source flag – 2 = AC or DC power. |
| NPZRV | 3 | Number of PORVS increased to 3 (add new relief valve). |
| PSETSV(3) | 1.E10 Pa | Opening set pressure for safety mode. Set to a high value to disable safety mode for this valve. |
| PSETRV(3) | 9.65E6 Pa | Opening set pressure for relief mode set to 1400 psia to depressurize the primary system to the target pressure. |
| NIPORV(3) | 1 | Flag set to 1 indicating that the third valve is a PORV. |
| WPORV0 | 50. kg/s | Primary system PORV flow rate set to 50 kg/s, or 396,825 lbm/hr. Since parameter AINPUT = 0, MAAP calculates to PORV flow area based on this flow rate and the nominal opening set pressure (PPORVL). This is a nominal value specified by Creare Engineering. Value results in desired RCS depressurization rate. |
| PPORVL | 13.79E6 Pa | Primary system PORV reference opening pressure at the valve flow rate (WPORV0) set to 13.79E6 Pa, or 2000 psia. This value, together with the value of WPORV0, gives the desired RCS pressure response. |
| ILOCK(3) | 1 | Flag set to 1 to inhibit the valve from automatically opening (valve is manually opened at 1800 secs). |
| ***High hot leg radiation (midradhi)*** | | |
| EG | 0.83 | Gas emissivity: Value is 130% of nominal (base value). |
| EWL | 0.83 | Wall emissivity: Value is 130% of nominal (base value). |
| ***Low hot leg radiation (midradlo)*** | | |
| EG | 0.39 | Gas emissivity: Value is 60% of nominal (base value). |
| EWL | 0.39 | Wall emissivity: Value is 60% of nominal (base value). |
| ***Low SG/Hot Leg Natural Circulation Flow (midwratlo)*** | | |
| FAOUT | 0.35 | Fraction of SG tubes carrying out flow in the hot leg NC model: Value is 70% of nominal (base case) value (0.5). |
| ***Low SG Inlet Plenum Mixing (midmxlo)*** | | |
| FEXTRA(260) | 0.070 | Redefine parameter "alpha" in hot leg natural circulation plume model in subroutine HLNC (base value is 0.085). By Creare Engineering. |

*This table includes only parameter changes relative to values in the parameter file (*ano2.par*).

**Table 4.3.4 (cont'd) MAAP4 Input File Local Parameter Changes – Medium/Dry/Low Sequences**

| PARAMETER | VALUE | DESCRIPTION/PURPOSE OF CHANGE |
|---|---|---|
| ***High SG Inlet Plenum Mixing (midmxhi)*** | | |
| XLHLTS | 1.34 M | Vertical distance between bottom of SG tube sheet and hot leg centerline at the SG plenum. Used in natural circulation model in subroutine HLNC. Base value is 3.6 ft (1.1 M). By Creare Engineering. |
| ***Best Combination of Phenomenon (midbes3)*** | | |
| EG | 0.83 | See above. |
| EWL | 0.83 | |
| XLHTS | 1.34 M | |
| ***Worst Combination of Phenomenon (midworst)*** | | |
| EG | 0.38 | See above. |
| EWL | 0.38 | |
| FEXTRA(260) | 0.070 | |
| FAOUT | 0.35 | |

**Table 4.3.5 MAAP4 Input File Local Parameter Changes – Clear Loop Seal Cases***

| PARAMETER | VALUE | DESCRIPTION/PURPOSE OF CHANGE |
|---|---|---|
| ***All Cases (except *hr, *lr)*** | | |
| EG | 0.72 | Gas emissivity: Improved value calculated by HRAD (cf. Table 4.1.6). |
| EW | 0.72 | Wall emissivity: Improved value calculated by HRAD (cf. Table 4.1.6). |
| ***All Cases*** | | |
| FARVUX | 0./1. | Fractional area of Unbroken SG relief valves used for steam dumps. Initially set to zero to ensure no steam dump credited. This parameter is changed to 1.0 to model opening of the U-loop ADV for U-SG depressurization cases (*clru*). |
| FARVBX | 0./1. | Fractional area of Broken SG relief valves used for steam dumps. Initially set to zero to ensure no steam dump credited. This parameter is changed to 1.0 to model opening of the B-loop ADV for B-SG depressurization cases (*clr*). |
| ***High hot leg radiation (pclrhr)*** | | |
| EG | 0.92 | Gas emissivity: Value is 130% of nominal (base value). |
| EWL | 0.92 | Wall emissivity: Value is 130% of nominal (base value). |
| ***Low hot leg radiation (pclrlr)*** | | |
| EG | 0.44 | Gas emissivity: Value is 60% of nominal (base value). |
| EWL | 0.44 | Wall emissivity: Value is 60% of nominal (base value). |

*This table includes only parameter changes relative to values in the parameter file (*ano2.par*). These changes are applicable to all cleared loop seal cases (*pclr*, *clr*, and *clru*)

## 5.0 RESULTS

Results from the TI-SGTR analysis are presented in the following sections. Results from the MAAP4 calculations are presented in Section 5.1. Results from the PROBFAIL calculations are presented in Section 5.2. The PROBFAIL results are the ANO-2 Cycle 14 induced SG tube rupture probabilities and represent the final results from this analysis.

### 5.1 MAAP4 Calculations

Key output files from all MAAP4 calculations are provided in "zip" files on the diskette in Attachment A. A list of the MAAP4 output files and the zip file naming convention is provided in Table 4.1.1. Sequence of events tables from the seven accident sequence base cases are provided in Tables 5.1.1(A) and 5.1.2 – 5.1.7. Event timings from the base and seven sensitivity cases for the high/dry/high sequence are included as Table 5.1.1(B). This table shows the impact on key event timings of the variations in parameter assumptions used in each case and is typical for all accident sequences. Table 5.1.8 compares primary system pressure and steam generator secondary pressures from each base case sequence. The data in this table demonstrates that the target sequence pressures (e.g., high RCS pressure, low SG pressure for the high/dry/low sequence) were obtained. The event timings were obtained from the event summary (*.sum*) files and the pressure data was obtained from the "*.d31*" plot files in Attachment A.

Inspection of the results in the tables and in the output files in Attachment A show that that the MAAP4 sequences ran correctly and returned appropriate results. Input assumptions for each sequence were properly implemented and the results are consistent with expectations. The primary system and SG secondary pressures in Table 5.1.8 show that the targeted pressures for each accident sequence were met. The sequence of event (SOE) tables show that the input assumptions (e.g., manual opening of a SG relief valve) are properly implemented. The SG dryout times in the SOE tables show that the dry SG assumption used in all sequences was implemented. The SOE tables from the cleared loop seal base cases (Tables 5.1.5 – 5.1.7) also show that the core barrel cleared and bumping the RCP's cleared the broken cold leg loop seals as per the sequence assumptions and associated input files.

The high/dry/high event timings in Table 5.1.1(B) show the impact on event timings of the combinations of various phenomenological assumptions studied (i.e., high SG inlet plenum mixing, low inlet plenum mixing, etc.). These results are presented as typical for all sequences. Note that the high hot leg radiation heat transfer cases (*pradhi, pbest*) result in the earliest times to hot leg failure, as expected. The high inlet plenum mixing case (*pmxhi*) also results in earlier hot leg failure relative to the base case.

**Table 5.1.1(A) MAAP4 Base Case Sequence of Events – High/Dry/High Sequence (*pbase*)**

| TIME (SEC) | EVENT |
|---|---|
| 0.0 | Loss of AC Power (Initiator) –<br>- Reactor scram<br>- RCP's trip<br>- MSIV's close (on Rx Scram)<br>- Main FW tripped (on Rx Scram)<br>- EFW not available (due to loss of AC)<br>- Charging/Letdown flow off |
| 4138.5 | Broken (B) SG dry |
| 4138.5 | Unbroken (U) SG dry |
| 5311.7 | Core uncovered |
| 7724.8 | Hottest core node (TCRHOT) $\geq$ 2500K |
| 9100.1 | B-loop hot leg creep rupture failure |
| 9116.7 | U-loop hot leg creep rupture failure |
| 9130.6 | Reactor vessel fails – run terminates |

**Table 5.1.1(B) MAAP4 High/Dry/High Sequence of Events Case Comparison**

| Event Times (sec) | | | | | | | | Event |
|---|---|---|---|---|---|---|---|---|
| *pbase* | *pmxhi* | *pmxlo* | *pradlo* | *pradhi* | *pwratlo* | *pbest* | *pworst* | |
| 0.0 | 0.0 | 0.0 | 0.0 | 0.0 | 0.0 | 0.0 | 0.0 | Initiation (Loss of AC Power) |
| 4138.5 | 4138.6 | 4138.6 | 4132.5 | 4137.2 | 4138.4 | 4137.2 | 4133.2 | Unbroken (U) SG Dry |
| 4138.5 | 4138.6 | 4138.6 | 4137.5 | 4142.2 | 4143.4 | 4142.2 | 4138.2 | Broken (B) SG Dry |
| 5311.7 | 5311.8 | 5311.8 | 5293.5 | 5284.7 | 5280.4 | 5284.7 | 5299.8 | Core Uncovered |
| 7724.8 | 7773.3 | 7713.7 | 7724.2 | 7672.5 | 7667.1 | 7615.2 | 7674.6 | Hottest core node (TCRHOT) $\geq$ 2500K |
| 9100.1 | 9086.3 | 9122.8 | - | 8806.0 | 9104.7 | 8801.1 | - | B-loop hot leg creep rupture failure |
| 9116.7 | 9106.3 | 9152.8 | - | 8811.0 | 9124.7 | 8806.1 | - | U-loop hot leg creep rupture failure |
| - | 9196.1 | 8670.1 | - | 9586.7 | - | - | 8710.3 | Surge line creep rupture failure |
| 9130.6 | 9216.8 | 9391.3 | 9365.9 | 10264.7 | 9378.7 | 9305.2 | 9179.0 | Reactor vessel fails – run terminates |

**Table 5.1.2 MAAP4 Base Case Sequence of Events – High/Dry/Low Sequence (*base*)**

| TIME (SEC) | EVENT |
|---|---|
| 0.0 | Loss of AC Power (Initiator) –<br>- Reactor scram<br>- RCP's trip<br>- MSIV's close (on Rx Scram)<br>- Main FW tripped (on Rx Scram)<br>- EFW not available (due to loss of AC)<br>- Charging/Letdown flow off |
| 7.6 | Broken SG relief valve manually opened |
| 1637.9 | Broken (B) SG dry |
| 4295.4 | Unbroken (U) SG dry |
| 5252.2 | Core uncovered |
| 7632.1 | Hottest core node (TCRHOT) $\geq$ 2500K |
| 7875.7 | B-SG tube creep rupture failure |
| 8237.2 | Surge line creep rupture failure |
| 9046.8 | U-loop hot leg creep rupture failure |
| 9069.1 | B-loop hot leg creep rupture failure |
| 9244.9 | Reactor vessel fails – run terminates |

**Table 5.1.3 MAAP4 Base Case Sequence of Events – High/Dry/Medium Sequence (*base3*)**

| TIME (SEC) | EVENT |
|---|---|
| 0.0 | Initiators:<br>- Reactor scram<br>- RCP's trip<br>- ECCS (HPSI/LPSI) forced off<br>- Containment cooling (fans/coolers/sprays) forced off<br>- Pressurizer Heaters forced off<br>- MSIV's close (on Rx Scram)<br>- Main FW tripped (on Rx Scram)<br>- EFW not available<br>- Charging/Letdown flow off |
| 3000.0 | SG relief valves manually opened (both SG's) |
| 3762.2 | Broken (B) SG dry |
| 3762.2 | Unbroken (U) SG dry |
| 5272.5 | Core uncovered |
| 7651.2 | Hottest core node (TCRHOT) $\geq$ 2500K |
| 8721.6 | U-SG tube creep rupture failure |
| 8862.5 | B-SG tube creep rupture failure |
| 9088.6 | U-loop hot leg creep rupture failure |
| 9098.6 | B-loop hot leg creep rupture failure |
| 9226.8 | Surge line creep rupture failure |
| 9341.9 | Reactor vessel fails – run terminates |

**Table 5.1.4 MAAP4 Base Case Sequence of Events – Medium/Dry/Low Sequence (*midbase*)**

| TIME (SEC) | EVENT |
|---|---|
| 0.0 | Loss of AC Power (Initiator) –<br>- Reactor scram<br>- RCP's trip<br>- MSIV's close (on Rx Scram)<br>- Main FW tripped (on Rx Scram)<br>- EFW not available (due to loss of AC)<br>- Charging/Letdown flow off |
| 46.7 | Broken SG relief valve manually opened |
| 1649.5 | Broken (B) SG dry |
| 1800.0 | Primary system high point vents opened |
| 3652.0 | Unbroken (U) SG dry |
| 4028.5 | Core uncovered |
| 6149.2 | Hottest core node (TCRHOT) $\geq$ 2500K |
| 7513.6 | Surge line creep rupture failure |
| 7813.2 | B-SG tube creep rupture failure |
| 8358.1 | B-loop hot leg creep rupture failure |
| 8394.3 | U-loop hot leg creep rupture failure |
| 10407.3 | Reactor vessel fails – run terminates |

**Table 5.1.5 MAAP4 Base Case SOE – Clear B-Loop Seal w/SG's Pressurized (*pclr*)**

| TIME (SEC) | EVENT |
|---|---|
| 0.0 | Initiators:<br>- Reactor scram<br>- RCP's trip<br>- ECCS (HPSI/LPSI) forced off<br>- Containment cooling (fans/coolers/sprays) forced off<br>- Pressurizer Heaters forced off<br>- MSIV's close (on Rx Scram)<br>- Main FW tripped (on Rx Scram)<br>- EFW not available<br>- Charging/Letdown flow off |
| 4140.7 | Broken (B) SG dry |
| 4140.7 | Unbroken (U) SG dry |
| 5262.9 | Core uncovered |
| 5699.8 | Core barrel cleared<br>RCP's manually bumped |
| 5703.3 | B-loop cold leg loop seals clear |
| 5719.8 | RCP's off |
| 11169.6 | B-SG tube creep rupture failure |
| 12286.3 | B-hot leg creep rupture failure |
| 13384.8 | U-hot leg creep rupture failure |
| 13650.7 | Surge line creep rupture failure |
| 15194.1 | U-SG tube creep rupture failure |
| 20000. | Run terminated. |

**Table 5.1.6 MAAP4 Base Case SOE – Clear B-Loop Seal w/B-SG Depressurized (*clr*)**

| TIME (SEC) | EVENT |
|---|---|
| 0.0 | Initiators:<br>- Reactor scram<br>- RCP's trip<br>- ECCS (HPSI/LPSI) forced off<br>- Containment cooling (fans/coolers/sprays) forced off<br>- Pressurizer Heaters forced off<br>- MSIV's close (on Rx Scram)<br>- Main FW tripped (on Rx Scram)<br>- EFW not available<br>- Charging/Letdown flow off |
| 7.3 | Broken (B) SG ADV manually opened/depressurize SG |
| 1151.2 | Broken (B) SG dry |
| 4258.8 | Unbroken (U) SG dry |
| 5205.0 | Core uncovered |
| 5649.7 | Core barrel cleared<br>RCP's manually bumped |
| 5653.0 | B-loop cold leg loop seals clear |
| 5670.8 | RCP's off |
| 8674.1 | B-SG tube creep rupture failure |
| 11317.0 | B-hot leg creep rupture failure |
| 11627.0 | Surge line creep rupture failure |
| 12050.1 | U-hot leg creep rupture failure |
| 13330.8 | U-SG tube creep rupture failure |
| 15108.8 | Hottest core node (TCRHOT) $\geq$ 2500K |
| 20000. | Run terminated. |

**Table 5.1.7 MAAP4 Base Case SOE – Clear B- Loop Seal w/U-SG Depressurized (*clru*)**

| TIME (SEC) | EVENT |
|---|---|
| 0.0 | Initiators:<br>- Reactor scram<br>- RCP's trip<br>- ECCS (HPSI/LPSI) forced off<br>- Containment cooling (fans/coolers/sprays) forced off<br>- Pressurizer Heaters forced off<br>- MSIV's close (on Rx Scram)<br>- Main FW tripped (on Rx Scram)<br>- EFW not available<br>- Charging/Letdown flow off |
| 7.3 | Unbroken (U) SG ADV manually opened/depressurize SG |
| 1151.1 | Unbroken (U) SG dry |
| 4257.7 | Broken (B) SG dry |
| 5214.2 | Core uncovered |
| 5650.1 | Core barrel cleared<br>RCP's manually bumped |
| 5653.8 | B-loop cold leg loop seals clear |
| 5671.1 | RCP's off |
| 10484.9 | B-SG tube creep rupture failure |
| 10744.9 | U-SG tube creep rupture failure |
| 11735.0 | B-hot leg creep rupture failure |
| 12522.2 | Surge line creep rupture failure |
| 12872.2 | U-hot leg creep rupture failure |
| 20000. | Run terminated. |

**Table 5.1.8 MAAP4 Base Case Sequences – Pressure Comparison**

| Case | Time (sec)[1] | RCS Pressure[2] | B-SG Pressure[3] | U-SG Pressure[4] |
|---|---|---|---|---|
| High/dry/high (*pbase*) | 9108.0 | 2410.8 | 1053.5 | 1050.4 |
| High/dry/low (*base*) | 9057.7 | 2293.9 | 14.5 | 1081.3 |
| High/dry/medium (*base3*) | 8764.0 | 2287.6 | 533.4 | 543.4 |
| Medium/dry/low (*midbase*) | 7572.7 | 1400.7 | 14.5 | 1039.4 |
| Clear B-loop Seal SG Pressurized (*pclr*) | 13414.8 | 2250.0 | 1036.9 | 1080.0 |
| Clear B-loop Seal SG-B Depressurized (*clr*) | 8674.1 | 2423.6 | 14.5 | 1059.2 |
| Clear B-loop Seal SG-U Depressurized (*clru*) | 10489.9 | 2332.3 | 1042.0 | 14.5 |

Notes:

1. Time pressures recorded; corresponds to time hot leg creep rupture predicted.
2. Primary System Pressure - PPS (converted to psia).
3. Broken (B) Steam Generator Secondary Pressure – PBS (converted to psia).
4. Unbroken (U) Steam Generator Secondary Pressure – PUS (converted to psia).

## 5.2 Tube Rupture Probabilities (PROBFAIL Calculations)

The final TI-SGTR probability results generated by the PROBFAIL calculations for the accident sequences and variations considered are summarized in Tables 5.2.1 and 5.2.2. These probabilities represent the probability of an induced SG tube rupture prior to hot leg creep rupture. The PROBFAIL results have been combined into two files (*allprfs.zip, allprfs121.txt*) and placed on the diskette in Attachment A.

Cycle 14 tube rupture probabilities based on the best-estimate pressure fragility curves from tube inspections performed during 2R13 are summarized in Table 5.2.1. Results are reported at three burnups (BOC14, MOC14, and EOC14) and for pristine tube conditions. The results for two steam generators depressurized have been estimated from the high/dry/low and medium/dry/low results by assuming that tube failure in either unit is independent. RCS and SG pressures shown in this table are the target nominal values associated with the given sequence. The actual MAAP4 values are reported in Table 5.1.8. The results in Table 5.2.1 indicate that:

- High/dry/low sequences result in the highest tube rupture probabilities (assuming intact loop seals) (cf. Cases 1, 7).
- Rupture probabilities increase with burnup between tube inspections, but drop significantly following a tube inspection/repair campaign. The probability of a TI-SGTR is greater at EOC than at MOC prior to tube inspection/repair.
- Tube rupture probabilities decrease as the SG secondary pressure increases (cf. Cases 1 – 3).
- Reducing the RCS pressure (from 2500 to 1400 psia) significantly reduces the TI-SGTR probabilities (cf. Case 4 vs. 1 and 8 vs. 7).
- The effect of loop seal clearing varies depending on the condition of the associated SG. A cleared loop seal on a high pressure SG has a relatively low failure probability (cf. Case 9). However, a cleared loop seal on a depressurized SG has a relatively high probability of tube failure (cf. Case 5). In the asymmetric case of a pressurized SG on a cleared loop and a depressurized SG on an intact loop (cf. Case 6), the cleared loop appears to decrease the tube rupture probability.

Tube rupture probabilities (PROBFAIL results) based on best-estimate fragility curves from tube inspections performed during mid-cycle outage 2P99 are summarized in Table 5.2.2. Results are shown for three burnups: 14.96 EFPY (BOP), 15.46 EFPY (MOP) and 15.81 EFPY (EOP). Similar to Table 5.2.1, the results for two steam generators depressurized have been estimated from the high/dry/low and medium/dry/low results and the RCS and SG pressures shown in the table are nominal values. The results in Table 5.2.2 show the same trends as noted above in Table 5.2.1. However, for all cases, at corresponding burnups the updated (2P99) tube rupture (fragility) curves result in higher tube failure probabilities. For example, the rupture probabilities at BOP after repair in Table 5.2.2 are significantly greater than the probabilities in Table 5.2.1 at MOC after repair.

**Table 5.2.1 Summary of ANO-2 Cycle 14 TI-SGTR Probabilities – 2R13 Fragility Curves**

| Case[3] | Case Description[4] | $P_{RCS}$ (psia) | $P_{SGU}$ (psia) | $P_{SGB}$ (psia) | $dP_{SGU}$ (psid) | $dP_{SGB}$ (psid) | RCS Loop U Seal Condition | RCS Loop B Seal Condition | $P_{SGTR}$ BOC[2] After Repair | $P_{SGTR}$ MOC[2] Before Repair | $P_{SGTR}$ MOC[2] After Repair | $P_{SGTR}$ EOC[2] Before Repair | $P_{SGTR}$ Pristine |
|---|---|---|---|---|---|---|---|---|---|---|---|---|---|
| 1[1] | H/D/Li/Li | 2500 | 14.7 | 14.7 | 2485 | 2485 | Intact | Intact | 0.538 | 0.806 | 0.538 | 0.891 | 0.024 |
| 2 | H/D/Mi/Mi | 2500 | 550 | 550 | 1950 | 1950 | Intact | Intact | 0.024 | 0.065 | 0.024 | 0.130 | 0.000 |
| 3 | H/D/Hi/Hi | 2500 | 1100 | 1100 | 1400 | 1400 | Intact | Intact | 6.60E-6 | 4.98E-4 | 6.60E-6 | 1.10E-2 | 0.000 |
| 4[1] | M/D/Li/Li | 1400 | 14.7 | 14.7 | 1385 | 1385 | Intact | Intact | 0.059 | 0.155 | 0.059 | 0.226 | 1.98E-3 |
| 5 | H/D/Hi/Lc | 2500 | 1100 | 14.7 | 1400 | 2485 | Intact | Clear | 0.770 | 0.900 | 0.770 | 0.920 | 0.092 |
| 6 | H/D/Li/Hc | 2500 | 14.7 | 1100 | 2485 | 1400 | Intact | Clear | 3.00E-3 | 3.90E-2 | 3.00E-3 | 9.90E-2 | 0.000 |
| 7 | H/D/Hi/Li | 2500 | 1100 | 14.7 | 1400 | 2485 | Intact | Intact | 0.320 | 0.560 | 0.320 | 0.670 | 0.012 |
| 8 | M/D/Hi/Li | 1400 | 1100 | 14.7 | 300 | 1385 | Intact | Intact | 0.030 | 0.081 | 0.030 | 0.120 | 9.87E-4 |
| 9 | H/D/Hi/Hc | 2500 | 1100 | 1100 | 1400 | 1400 | Intact | Clear | 7.30E-4 | 1.10E-2 | 7.30E-4 | 3.80E-2 | 0.000 |

1. Case 1 and 4 results (2/2 SGs) are estimated from Case 7 and 8 (1/2 SGs) results via Boolean doubling of the 1/2SG results, i.e. $(1-(1-P_{SGTR-1/2})^2)$
2. Beginning, Middle, and End of Cycle (BOC, MOC, EOC) are defined as follows:
   BOC: 0.0
   MOC: ½ Cycle 14
   EOC: Full Cycle
   MOC After Repair values = BOC values
3. PROBAFAIL case names associated with case numbers in above table:
   Case 2 based on PROBFAIL case name case_d3
   Case 3 based on PROBFAIL case name pcase_d
   Case 5 based on PROBFAIL case name clr
   Case 6 based on PROBFAIL case name clru
   Case 7 based on PROBFAIL case name case_d
   Case 8 based on PROBFAIL case name case_mid
   Case 9 based on PROBFAIL case name pclr
4. Case description format is $P_{RCS}$/SG Inventory/U-Loop/B-loop, where:
   $P_{RCS}$ is the RCS pressure end state (H = High, M = Medium),
   SG Inventory is the SG secondary inventory end state (D = Dry),
   U-Loop is the Unbroken loop SG pressure and loop seal end state
   (L=Low, M=Medium, H=High; i = intact loop seal, c = cleared loop seal),
   B-Loop is same as U-Loop for the Broken loop SG and seal end states.

## Table 5.2.2 Summary of ANO-2 Cycle 14 TI-SGTR Probabilities – 2P99 Fragility Curves

| Case[3] | Case Description[4] | $P_{RCS}$ (psia) | $P_{SGU}$ (psia) | $P_{SGB}$ (psia) | $dP_{SGU}$ (psid) | $dP_{SGB}$ (psid) | RCS Loop U Seal Condition | RCS Loop B Seal Condition | $P_{SGTR}$ BOP[2] After Repair | $P_{SGTR}$ MOP[2] Before Repair | $P_{SGTR}$ MOP[2] After Repair | $P_{SGTR}$ EOP[2] Before Repair |
|---|---|---|---|---|---|---|---|---|---|---|---|---|
| 1[1] | H/D/Li/Li | 2500 | 14.7 | 14.7 | 2485 | 2485 | Intact | Intact | 0.895 | 0.937 | 0.895 | 0.962 |
| 2 | H/D/Mi/Mi | 2500 | 550 | 550 | 1950 | 1950 | Intact | Intact | 0.15 | 0.209 | 0.15 | 0.28 |
| 3 | H/D/Hi/Hi | 2500 | 1100 | 1100 | 1400 | 1400 | Intact | Intact | 3.964E-03 | 7.088E-03 | 3.964E-03 | 1.229E-02 |
| 4[1] | M/D/Li/Li | 1400 | 14.7 | 14.7 | 1385 | 1385 | Intact | Intact | 0.245 | 0.307 | 0.245 | 0.373 |
| 5 | H/D/Hi/Lc | 2500 | 1100 | 14.7 | 1400 | 2485 | Intact | Clear | 0.936 | 0.953 | 0.936 | 0.960 |
| 6 | H/D/Li/Hc | 2500 | 14.7 | 1100 | 2485 | 1400 | Intact | Clear | 0.120 | 0.179 | 0.120 | 0.252 |
| 7 | H/D/Hi/Li | 2500 | 1100 | 14.7 | 1400 | 2485 | Intact | Intact | 0.676 | 0.750 | 0.676 | 0.804 |
| 8 | M/D/Hi/Li | 1400 | 1100 | 14.7 | 300 | 1385 | Intact | Intact | 0.131 | 0.168 | 0.131 | 0.208 |
| 9 | H/D/Hi/Hc | 2500 | 1100 | 1100 | 1400 | 1400 | Intact | Clear | 4.227E-02 | 6.648E-02 | 4.227E-02 | 1.000E-01 |

1. Case 1 and 4 results (2/2 SGs) are estimated from Case 7 and 8 (1/2 SGs) results via Boolean doubling of the 1/2SG results, i.e. $(1-(1-P_{SGTR-1/2})^2)$
2. Beginning, Middle, and End of Period (BOP, MOP, EOP) are defined as follows:
   BOP: 14.96 efpy (2P99)
   MOP: 15.46 efpy (proposed 2P00)
   EOP: 15.81 efpy (scheduled 2R14)
   MOP After Repair values = BOP values.
3. PROBAFAIL case names associated with case numbers in above table:
   Case 2 based on PROBFAIL case name case_d3
   Case 3 based on PROBFAIL case name pcase_d
   Case 5 based on PROBFAIL case name clr
   Case 6 based on PROBFAIL case name clru
   Case 7 based on PROBFAIL case name case_d
   Case 8 based on PROBFAIL case name case_mid
   Case 9 based on PROBFAIL case name pclr
4. Case description format is $P_{RCS}$/SG Inventory/U-Loop/B-loop, where:
   $P_{RCS}$ is the RCS pressure end state (H = High, M = Medium),
   SG Inventory is the SG secondary inventory end state (D = Dry),
   U-Loop is the Unbroken loop SG pressure and loop seal end state
   (L=Low, M=Medium, H=High; i = intact loop seal, c = cleared loop seal),
   B-Loop is same as U-Loop for the Broken loop SG and seal end states.

# Attachment A
# Diskette

The diskette is an IOMEGA zip disk containing selected input and output files from the MAAP4 calculations, HOTLEG calculations, and PROBFAIL calculations. These files are described in Section 4.1.1 and Tables 4.1.1, 4.1.2, and 4.1.3. The files reside in the following directories.

MAAP4/HOTLEG I/O files: \ano_tape\maap

Changes to MAAP source code: \ano_tape\maap_source_changes

PROBFAIL I/O files: \ano_tape\probfail

**[Diskette goes here.]**

# Attachment B
# Steam Generator Tube Burst Probability Calculations

## B.1 Introduction

Best estimate Steam Generator (SG) tube burst probability values were estimated as a function of the pressure difference between the primary and secondary regions and as a function of burnup for the most limiting Steam Generator during ANO-2 Cycle 14. Two sets of burst probability data were taken: (1) data collected during ANO-2 Refueling outage 2R13, just before Cycle 14 and (2) data collected during 2P99. For the 2R13 data, two types of SG tube defects were evaluated: (1) eggcrate axial defects and (2) top of tubesheet circumferential tube defects. The former are presented in Section B.2 and the latter in Section B.3. The combined SG tube "fragility" results at 2R13 are presented in Section B.4. For the 2P99 data, only eggcrate axial defects were collected. This information is presented in Section B.5.

## B.2 Eggcrate Axial Defects at 2R13

The burst probability verses pressure for the eggcrate axials were determined by varying the steam line break pressure input into the OPCON model. The output from the model is used to generate a pressure to burst correlation at Beginning-of-Cycle 14 (BOC14) just after 2R13 and at Middle-of-Cycle 14 (MOC14) just before the SG inspection outage 2P99. In the OPCON model the burst correlation is based on a 95/95 upper limit, while the input into the severe accident analysis uses a best estimate value. To acquire the best estimate values the pressure to burst correlation generated by the OPCON model is adjusted by adding 1000 psi to the pressure. The POB results for eggcrate axial defects at MOC14 just after 2P99 was assumed to be identical to that at BOC14 just after 2R13. And, the POB results for eggcrate axial defects at EOC14 just before ANO-2 Refueling outage 2R14 was assumed to be identical to that for MOC14 just after 2P99. The results of the calculations are listed in Table B-1.

## B.3 Top of Tubesheet Circumferential Defects at 2R13

The methodology for determining the pressure to burst correlation is the same as for the eggcrate axials, except the 1000 psi adjustment for best estimate values is not required. The probability of burst (POB) values calculated above 3ΔP (i.e., three times the nominal operating pressure difference across the SG tubes) were generated by APTECH the vendor for OPCON. This was due to the circumferential model in OPCON not having the proper burst to percent degraded area (PDA) correlation above 3ΔP. The results of the calculations are listed in Table B-2.

## B.4 Combined Results at 2R13

As noted above, the BOC14 and MOC14 POB values generated for the eggcrate axial flaws are applied to the second half of the cycle following 2P99. And, since the circumferential defects are not planned to

be inspected during 2P99, the POB values are evaluated for the full cycle. The SG tube fragility results at BOC14, MOC14 before 2P99, MOC14 after 2P99, and EOC14:were obtained as follows:

(1) Total POB at BOC14 is the sum of the Eggcrate Defect POB at BOC14 and the Circ Defect POB at BOC14.
(2) Total POB at MOC14 before 2P99 is the sum of the Eggcrate Defect POB at MOC14 before 2P99 and the Circ Defect POB at MOC14.
(3) Total POB at MOC14 after 2P99 is the Eggcrate Defect POB at BOC14; the Circ Defect POB at MOC14 was neglected, since its magnitude was negligible relative the Eggcrate POB.
(4) Total POB at EOC14 is the sum of the Eggcrate Defect POB at MOC14 before 2P99 and the Circ Defect POB at EOC14.

These results are presented in Table B-3 and Figure B-1.

## B.5 Eggcrate Axial Defects at 2P99

The burst probability verses pressure for the eggcrate axials at 2P99 were determined by varying the steam line break pressure input into the OPCON model. The output from the model is used to generate a pressure to burst correlation at 14.96 EFPY (the Beginning of Period (BOP)), at 15.46 EFPY (called Middle of Period (MOP)), and at 15.81 EFPY (the End-of-Cycle 14 burnup, called End of Period (EOP)). In the OPCON model the burst correlation is based on a 95/95 upper limit, while the input into the severe accident analysis uses a best estimate value. Both were provided. To acquire the best estimate values the pressure to burst correlation generated by the OPCON model is adjusted by adding 1000 psi to the pressure. The POB results for eggcrate defects at MOP just after a proposed 2P00 SG inspection outage was assumed to be identical to that at BOP just after 2P99. The results of the calculations are presented in Table B-4 and Figure B-2.

**Table B-1. Probability of SG Tube Burst Due to EGGCRATE Defects Only Collected at 2R13**

| | Probability of Burst | | | | | | | | |
|---|---|---|---|---|---|---|---|---|---|
| **RCS/SG Pressure Differential (psid)** | **2500** | **3500** | **4050** | **4500** | **5500** | **6500** | **7000** | **7500** | **8000** |
| Eggcrate @BOC14 and @MOC14 After Insp/Repair | 0.000001 | 0.000020 | 0.000117 | 0.000500 | 0.009000 | 0.110600 | 0.313900 | 0.675100 | 0.958200 |
| Eggcrate @MOC14 and @EOC14 Before Insp/Repair | 0.000048 | 0.000770 | 0.003551 | 0.012400 | 0.133700 | 0.658100 | 0.933200 | 0.997700 | 1.000000 |

**Table B-2. Probability of SG Tube Burst Due to CIRC Defects Only Collected at 2R13**

| | Probability of Burst | | | | | | | | |
|---|---|---|---|---|---|---|---|---|---|
| **RCS/SG Pressure Differential (psid)** | **2500** | **3500** | **4050** | **4500** | **5500** | **6500** | **7000** | **7500** | **8000** |
| Circ @BOC14 After Insp/Repair | 0 | 0 | 0 | 0 | 0.00000 | 0 | 0 | 0 | 0 |
| Circ @MOC14 Before Insp/Repair | 0 | 0 | 0 | 0 | 0.00001 | 0 | 0 | 0 | 0 |
| Circ @EOC14 Before Insp/Repair | 0.0083 | 0.0151 | 0.0230 | 0.039378 | 0.1302 | 0.8100 | 1.0000 | 1.0000 | 1.0000 |

**Table B-3. Probability of SG Tube Burst Due to Both EGGCRATE and CIRC Defects Collected at 2R13**

| | Probability of Burst | | | | | | | | |
|---|---|---|---|---|---|---|---|---|---|
| **RCS/SG Pressure Differential (psid)** | **2500** | **3500** | **4050** | **4500** | **5500** | **6500** | **7000** | **7500** | **8000** |
| Eggcrate+Circ @BOC14 After Insp/Repair 2R13 | 8.00E-07 | 0.000020 | 0.000117 | 0.000500 | 0.009000 | 0.110600 | 0.313900 | 0.675100 | 0.958200 |
| Eggcrate+Circ @MOC14 Before Insp/Repair 2P99 | 4.78E-05 | 0.000770 | 0.003551 | 0.012400 | 0.133709 | 0.658100 | 0.933200 | 0.997700 | 1.000000 |
| Eggcrate+Circ @MOC14 After Insp/Repair 2P99 | 8.00E-07 | 0.000020 | 0.000117 | 0.000500 | 0.009000 | 0.110600 | 0.313900 | 0.675100 | 0.958200 |
| Eggcrate+Circ @EOC14 Before Insp/Repair 2R14 | 0.008347 | 0.015858 | 0.026459 | 0.051289 | 0.246492 | 0.935039 | 1.000000 | 1.000000 | 1.000000 |

Burnup values are as follows:

| | |
|---|---|
| BOC14 | 3 EFPDs into Cyc-14 (2R13) |
| MOC14 | Core Avg Burnup of 14.62 EFPY (2P99) |
| EOC14 | Core Avg Burnup = 15 EFPY (2R14) |

**Table B-4 Probability of SG Tube Burst Due to EGGCRATE Defects Only Collected at 2P99**

| | Probability of Burst | | | | | | | | | | |
|---|---|---|---|---|---|---|---|---|---|---|---|
| **RCS/SG Pressure Differential (psid)** | **2500** | **3500** | **4050** | **4500** | **5000** | **5500** | **6000** | **6500** | **7000** | **7500** | **8000** |
| Eggcrate @BOP (14.96 EFPY) Best Estimate | 0.000414 | 0.008803 | 0.029078 | 0.067469 | 0.155 | 0.319098 | 0.564983 | 0.8 | 0.955 | 0.995 | 1 |
| Eggcrate @MOP (15.46 EFPY) Best Estimate | 0.000971 | 0.015816 | 0.049952 | 0.112653 | 0.25 | 0.462326 | 0.726071 | 0.92 | 0.985 | 1 | 1 |
| Eggcrate @EOP (15.81 EFPY) Best Estimate | 0.002088 | 0.028751 | 0.085386 | 0.180925 | 0.36 | 0.604271 | 0.838664 | 0.97 | 1 | 1 | 1 |
| Eggcrate @BOP (14.96 EFPY) 95/95 | 0.002274 | 0.03511 | 0.105795 | 0.233689 | 0.47 | 0.754842 | 0.946289 | 0.995 | 1 | 1 | 1 |
| Eggcrate @MOP (15.46 EFPY) 95/95 | 0.004139 | 0.058 | 0.173506 | 0.355342 | 0.625 | 0.884035 | 0.985952 | 1 | 1 | 1 | 1 |
| Eggcrate @EOP (15.81 EFPY) 95/95 | 0.007607 | 0.097923 | 0.265946 | 0.490869 | 0.75 | 0.946563 | 0.995806 | 1 | 1 | 1 | 1 |

Notes:
1. ANO-2 SG fragility data calculated by APTEC and supplied to ANO on 1/11/00. The fragility data is based on data from 2P99.
2. The 5000, 6500, 7000,7500, and 8000 psid data are estimated based on the following:
   a) 15.81 EFPY 95/95 is assumed to be 1 at 6500psid.
   b) The shape of the other curves are estimated based on shape of 15.81 EFPY 95/95 curve.
   c) The 5000 psid data is interpolated based on shape of each curve.

**Figure B.1 SG Tube Burst Probability Using Data at 2P13**

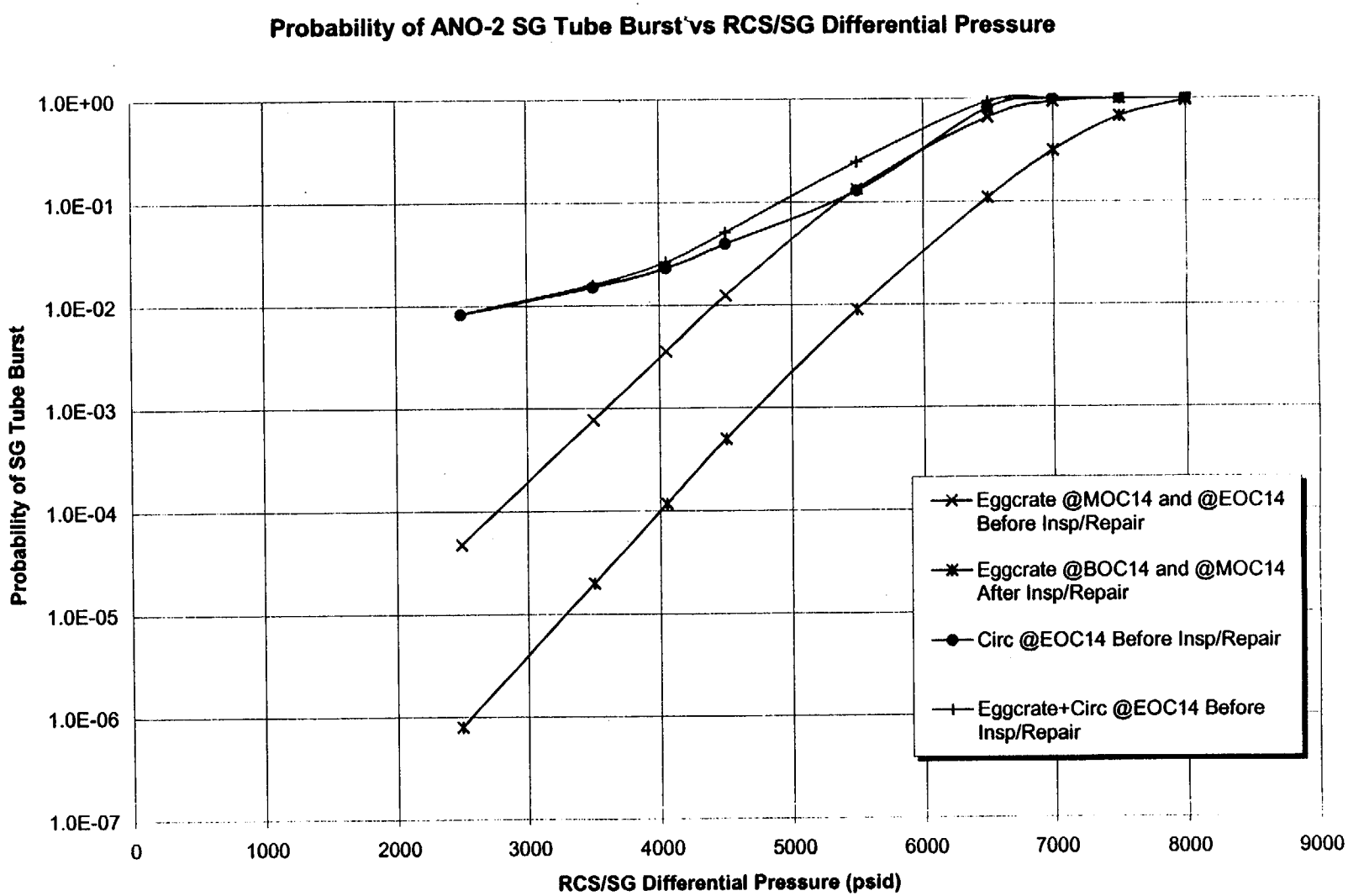

**Figure B.2 SG Tube Burst Probability Using Data at 2P99**

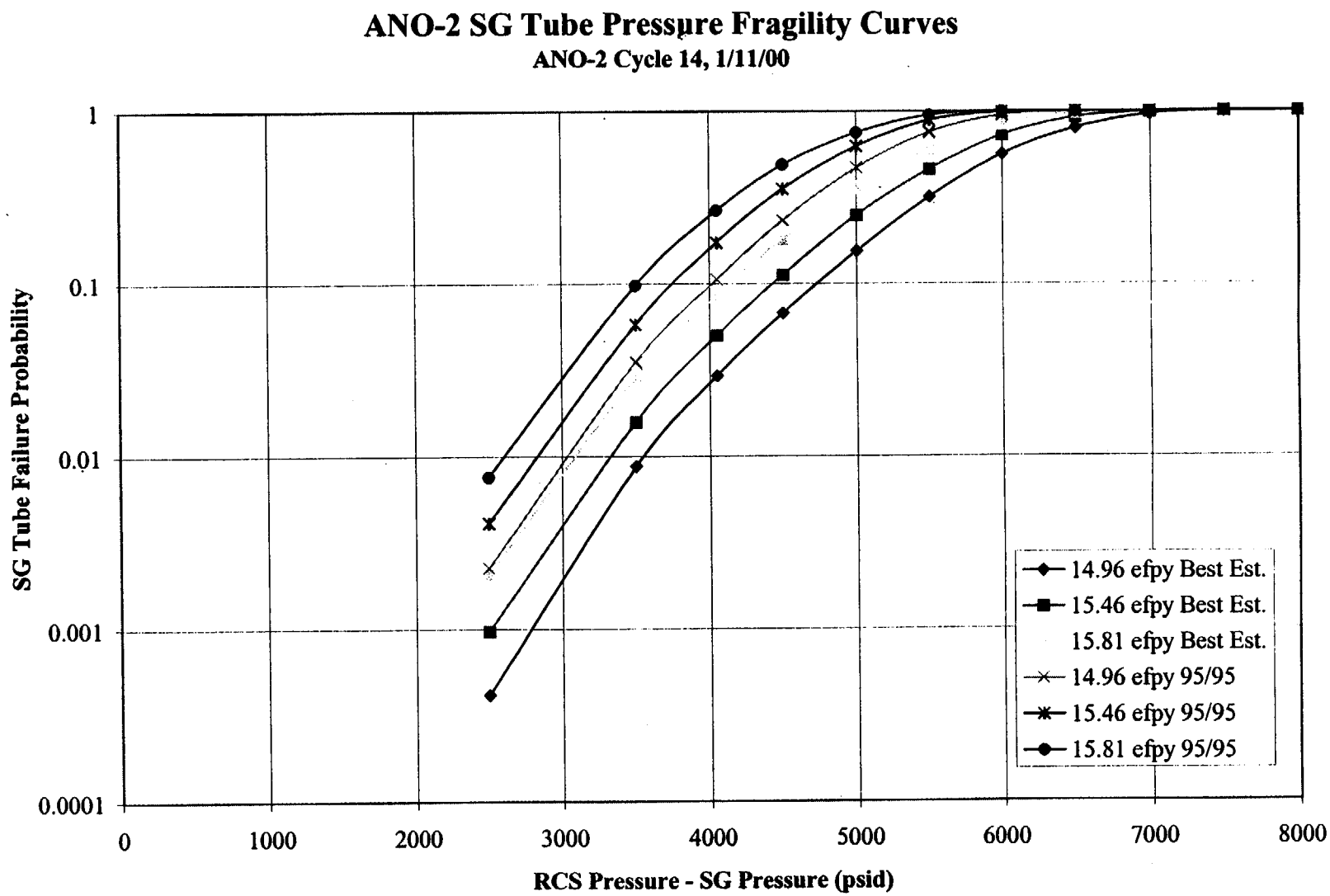

# Attachment 8

Most previous analyses of creep rupture have focused on Westinghouse plants. In these, the failure of the alloy steel nozzle is believed to precede the failure of the stainless steel piping since the latter has a higher rupture strength. In many CE plants, the hot legs are made of ASTM A516 Gr 70 carbon steel; according to reference [1], the reduced molybdenum present in the hot leg steel relative to that in the RPV nozzle steel can be expected to reduce the high-temperature rupture strength of the piping.

Two compendiums of creep rupture data were reviewed, references [2] and [3]. Curve fits to the data in Reference [2] for carbon-molybdenum steel (which includes samples of ASTM A533, the same type of steel that is often used for hot leg nozzles) gave results similar to those obtained from the correlation in SCDAP for A508 Class 2 pressure vessel steel. The data for carbon steel plate in reference [3] showed considerably more scatter, reflecting the wide variety of carbon steels that are available. In particular, it was noted in the reference that steels ordered to an ultimate tensile stress specification greater than 60 ksi, as is typically the case for CE hot leg steel, showed better creep rupture performance than steels ordered to lower specifications. For this reason, correlations were developed from the 100,000 hour rupture strength data from only the high strength samples; some of these samples were of ASTM A516, as used in ANO-2. The resulting correlation is:

$$P_{LM} = 1000(42.02 \pm 1.09 - 8.477 Log10(\sigma_{ksi}))$$

where $P_{LM}$ is the Larson-Miller parameter and $\sigma_{ksi}$ is the hoop stress in ksi. The failure time $t_R$ in hours is given in terms of temperature T (degrees Rankine) and Larson-Miller parameter by:

$$t_R = 10^{P_{LM}/T(R)-20.}$$

The "minimum" correlation was derived from the "minimum" curve shown in Figure 15 of reference [3]; that curve is stated to be a "90 percent confidence-level minimum", which was assumed to represent a one-sided 90/90 confidence value. The "maximum" curve was obtained by applying an equal but opposite offset to the median value for the intercept; derived in this manner, the curve just bounds all the high strength data available for carbon steel plate.

References:


1. American Society of Metals, Metals Handbook, 10th Edition, p 197.
2. G.V. Smith, Evaluations of the Elevated Temperature Tensile Properties of C-Mo, Mn-Mo, and Mn-Mo-Ni Steels, ASTM DS 47, 1971.
3. G.V. Smith, An Evaluation of the Elevated Temperature Tensile and Creep-Rupture Properties of Wrought Carbon Steel, ASTM DS 11S1, January 1970.

# Attachment 9

TABLE 2-1

PRE-TEST SAMPLE MEASUREMENTS

| Measurement (inches) | | R70L98 | R16L56 |
|---|---|---|---|
| | Sample Length | 15.9 | 12.2 |
| Wall Thickness | Top - 0° | 0.048 | 0.051 |
| | Top - 90° | 0.052 | 0.053 |
| | Top - 180° | 0.053 | 0.053 |
| | Top - 270° | 0.052 | 0.051 |
| | Bottom - 0° | 0.052 | 0.052 |
| | Bottom - 90° | 0.053 | 0.053 |
| | Bottom - 180° | 0.053 | 0.052 |
| | Bottom - 270° | 0.053 | 0.051 |
| Outer Diameter | Top - 0°/180° | 0.756 | 0.758 |
| | Top - 90°/270° | 0.758 | 0.756 |
| | Middle - 0°/180° | 0.757 | 0.758 |
| | Middle - 0°/270° | 0.760 | 0.758 |
| | Bottom - 0°/180° | 0.760 | 0.758 |
| | Bottom - 90°/270° | 0.759 | 0.758 |
| Center of Bladder & ECT Indication | Inches from top | 11.5 | 7.2 |

The angles refer to the orientation on the tube. The 0° orientation is at the identification notch and other orientations proceed clockwise looking up the tube. Top, Middle and Bottom refer to location on the length of the sample. All measurements include the deposit thickness.

# Attachment 10

| Maximum Depth |
|---|
| 91 |
| 89 |
| 88 |
| 87 |
| 86 |
| 85 |
| 83 |
| 81 |
| 80 |
| 80 |
| 78 |
| 74 |
| 74 |
| 73 |
| 73 |
| 72 |
| 72 |
| 71 |
| 69 |
| 69 |
| 68 |
| 68 |
| 68 |
| 68 |
| 67 |
| 67 |
| 67 |
| 67 |
| 67 |
| 66 |
| 66 |
| 66 |
| 65 |
| 65 |
| 65 |
| 65 |
| 64 |
| 64 |
| 64 |
| 64 |
| 64 |
| 64 |
| 63 |
| 63 |
| 63 |
| 63 |
| 63 |
| 63 |
| 63 |
| 62 |

Lengths are determined by the distribution specified in the report AES 99113855-1-1 "Structural Integrity Evaluation of Axial Outside Diameter Stress Corrosion Cracking at Supports for Arkansas Nuclear One, Unit 2, During Cycle 14 Post Mid-Cycle Operation". This is in Figure 4-2.

62
62
61
61
61
61
61
61
60
60
60
60
60
60
59
59
59
59
59
59
58
58
57
57
57
57
56
56
56
56
55
55
55
55
55
55
55
55
55
54
54
54
54
53
53
53
53
53
53
53
53

52
51
50
50
50
50
50
50
50
50
50
50
49
49
49
48
48
48
48
48
47
47
46
46
45
45
44
44
43
43
42
42
42
42
42
41
40
40
40
40
40
40
40
39
38
38
38
38
38
37
37

36
35
35
35
35
34
32
31
30
30
30
28
25
25
25
23
23
21
19
17
15
14
14
12
7
6
5
5
2
1
1
1

# Attachment 11

ANO-2 RCS

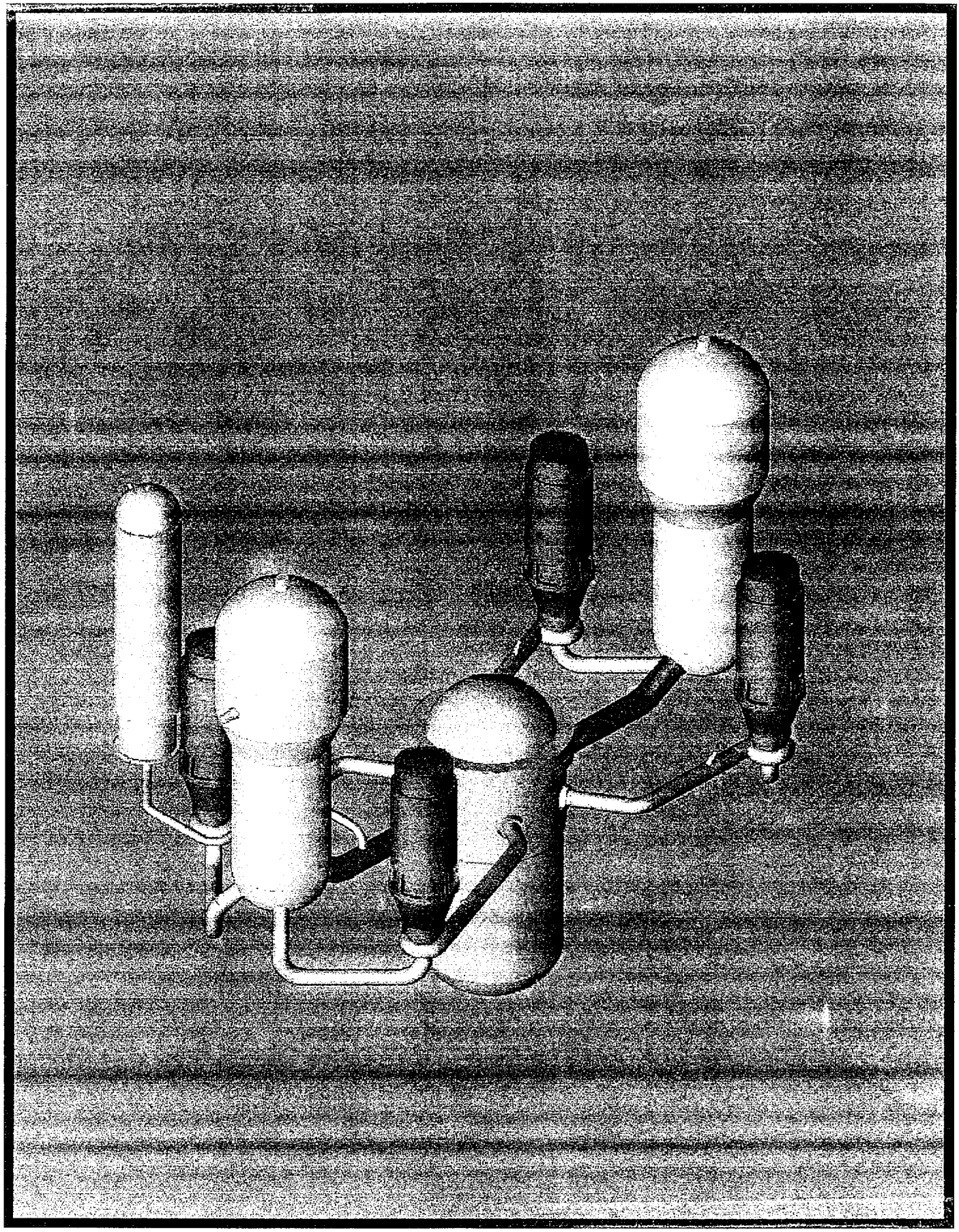

(Not a design drawing)

ANO-2 RCS Top View

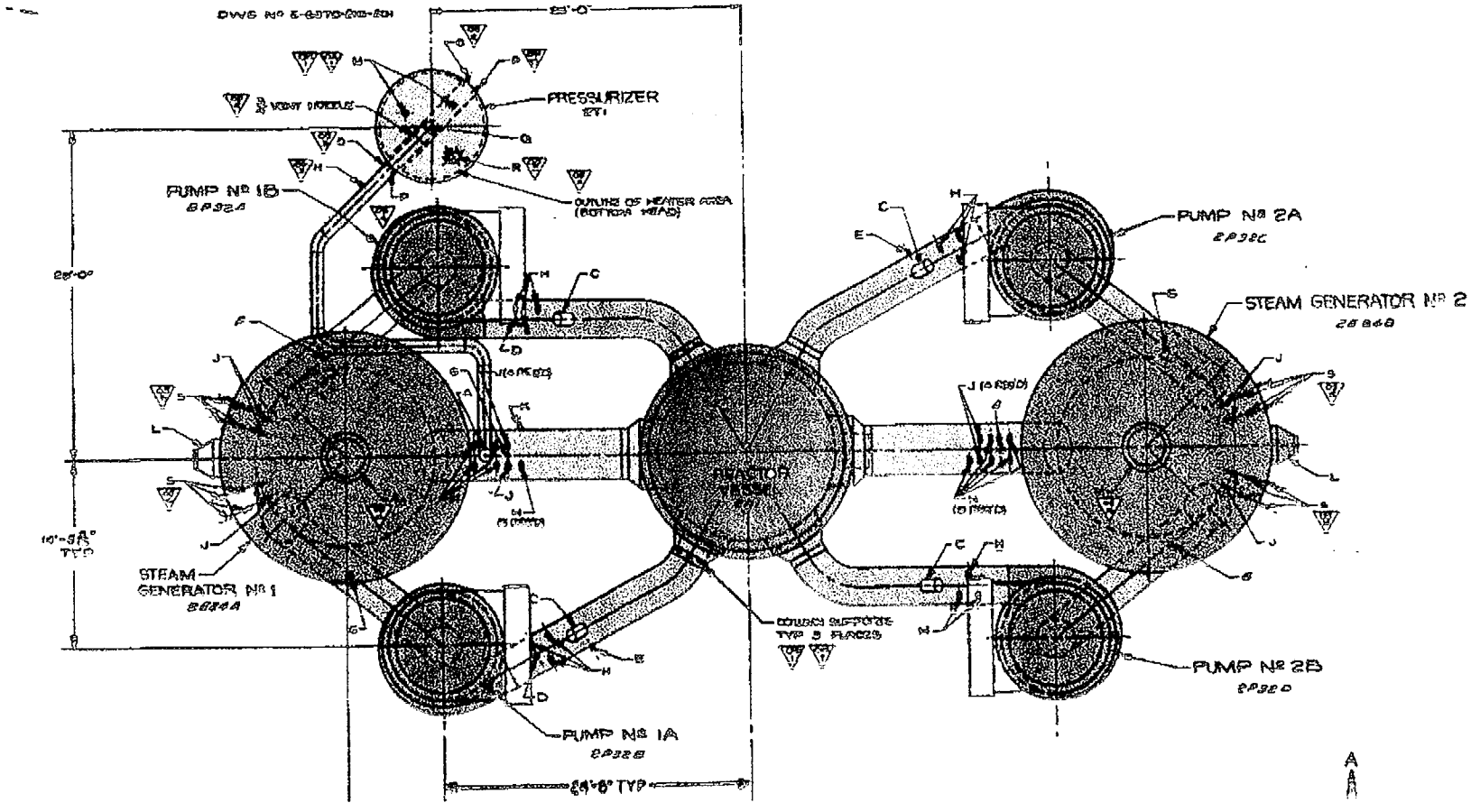


(Not a design drawing)

# ANO-2 RCS Side View

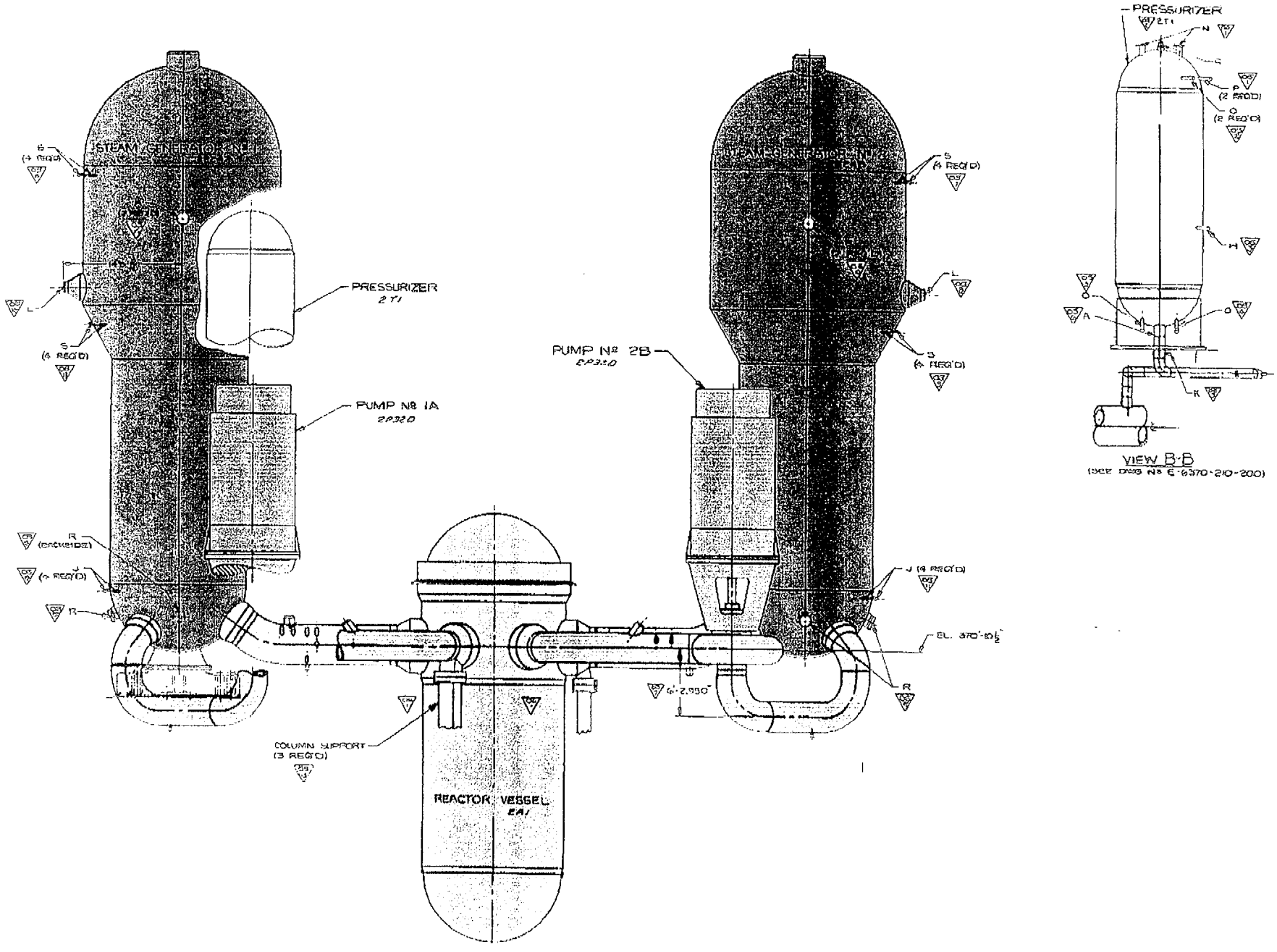


(Not a design drawing)

# THIS PAGE IS AN OVERSIZED DRAWING OR FIGURE,

## THAT CAN BE VIEWED AT THE RECORD TITLED: E 235-216 Rev. 2: GENERAL ARRANGEMENT FOR: ARKANSAS NUCLEAR PIPING

## WITHIN THIS PACKAGE...OR, BY SEARCHING USING THE DOCUMENT/REPORT NUMBER: E 235-216 Rev. 2

**NOTE: Because of this page's large file size, it may be more convenient to copy the file to a local drive and use the Imaging (Wang) viewer, which can be accessed from the Programs/Accessories menu.**