**Lewis Sumner**
Vice President
Hatch Project Support

**Southern Nuclear**
**Operating Company, Inc.**
40 Inverness Parkway
Post Office Box 1295
Birmingham, Alabama 35201

Tel 205.992.7279
Fax 205.992.0341

SOUTHERN COMPANY
*Energy to Serve Your World*℠

April 11, 2000

Docket No. 50-366 HL-5922

U.S. Nuclear Regulatory Commission
ATTN: Document Control Desk
Washington, D.C. 20555

Edwin I. Hatch Nuclear Plant - Unit 2
Licensee Event Report
Unclear Drawing Results in
Unplanned Actuation of Engineered Safety Features

Ladies and Gentlemen:

In accordance with the requirements of 10 CFR 50.73(a)(2)(iv) Southern Nuclear Operating Company is submitting the enclosed Licensee Event Report (LER) concerning an unclear drawing that resulted in an unplanned actuation of engineered safety features.

Respectfully submitted,

Lewis Sumner

H. L. Sumner, Jr.

JL/eb

Enclosure: LER 50-366/2000-002

cc: Southern Nuclear Operating Company
Mr. P. H. Wells, Nuclear Plant General Manager
SNC Document Management (R-Type A02.001)

U.S. Nuclear Regulatory Commission, Washington, D.C.
Mr. L. N. Olshan, Project Manager - Hatch

U.S. Nuclear Regulatory Commission, Region II
Mr. L. A. Reyes, Regional Administrator
Mr. J. T. Munday, Senior Resident Inspector - Hatch

IE22

NRC FORM 366 (06-1998) U.S. NUCLEAR REGULATORY COMMISSION

# LICENSEE EVENT REPORT (LER)

(See reverse for required number of digits/characters for each block)

APPROVED BY OMB NO. 3150-0104 EXPIRES 06/30/2001
Estimated burden per response to comply with this mandatory information collection request: 50 hrs. Reported lessons learned are incorporated into the licensing process and fed back to industry. Forward comments regarding burden estimate to the Information and Records Management Branch (T-6 F33), U.S. Nuclear Regulatory Commission, Washington, DC 20555-0001, and to the Paperwork Reduction Project (3150-0104), Office of Management and Budget, Washington, DC 20503. If a document used to impose an information collection does not display a currently valid OMB control number, the NRC may not conduct or sponsor, and a person is not required to respond to, the information collection.

| FACILITY NAME (1) | DOCKET NUMBER (2) | PAGE (3) |
|---|---|---|
| Edwin I. Hatch Nuclear Plant - Unit 2 | 05000-366 | 1 OF 5 |

TITLE (4)
Unclear Drawing Results in Unplanned Actuation of Engineered Safety Features

| EVENT DATE (5) | | | LER NUMBER (6) | | | REPORT DATE (7) | | | OTHER FACILITIES INVOLVED (8) | |
|---|---|---|---|---|---|---|---|---|---|---|
| MONTH | DAY | YEAR | YEAR | SEQUENTIAL NUMBER | REVISION NUMBER | MONTH | DAY | YEAR | FACILITY NAME | DOCKET NUMBER(S) |
| 03 | 14 | 2000 | 2000 | 002 | 00 | 04 | 11 | 2000 | | 05000 |
| | | | | | | | | | | DOCKET NUMBER(S) 05000 |

| OPERATING MODE (9) | 5 |
|---|---|
| POWER LEVEL (10) | 0 |

THIS REPORT IS SUBMITTED PURSUANT TO THE REQUIREMENTS OF 10 CFR §: (Check one or more) (11)

| | | | | | | | |
|---|---|---|---|---|---|---|---|
| | 20.2201(b) | | 20.2203(a)(2)(v) | | 50.73(a)(2)(i) | | 50.73(a)(2)(vii) |
| | 20.2203(a)(1) | | 20.2203(a)(3)(i) | | 50.73(a)(2)(ii) | | 50.73(a)(2)(ix) |
| | 20.2203(a)(2)(i) | | 20.2203(a)(3)(ii) | | 50.73(a)(2)(iii) | | 73.71 |
| | 20.2203(a)(2)(ii) | | 20.2203(a)(4) | X | 50.73(a)(2)(iv) | | OTHER |
| | 20.2203(a)(2)(iii) | | 50.36(c)(1) | | 50.73(a)(2)(v) | | Specify in Abstract below or in NRC Form 366A |
| | 20.2203(a)(2)(iv) | | 50.36(c)(2) | | 50.73(a)(2)(vii) | | |

LICENSEE CONTACT FOR THIS LER (12)

| NAME | TELEPHONE NUMBER (Include Area Code) |
|---|---|
| Steven B. Tipps, Nuclear Safety and Compliance Manager, Hatch | (912) 367-7851 |

COMPLETE ONE LINE FOR EACH COMPONENT FAILURE DESCRIBED IN THIS REPORT (13)

| CAUSE | SYSTEM | COMPONENT | MANUFACTURER | REPORTABLE TO EPIX | CAUSE | SYSTEM | COMPONENT | MANUFACTURER | REPORTABLE TO EPIX |
|---|---|---|---|---|---|---|---|---|---|
| | | | | | | | | | |
| | | | | | | | | | |

| SUPPLEMENTAL REPORT EXPECTED (14) | | | | EXPECTED SUBMISSION DATE (15) | MONTH | DAY | YEAR |
|---|---|---|---|---|---|---|---|
| | YES (If yes, complete EXPECTED SUBMISSION DATE) | X | NO | | | | |

ABSTRACT (Limit to 1400 spaces, i.e., approximately 15 single-space typewritten lines) (16)

On 3/14/2000 at 1318 EST, Unit 2 was in the refuel mode with the reactor vessel disassembled and flooded to accommodate refueling operations. At that time, a local leak rate test (LLRT) was being performed which resulted in inadvertently applying air pressure to a sensor that detects high pressure in the drywell. As a result of this signal, several engineered safety features associated with high drywell pressure were actuated, including the drywell floor drain isolation valve in the primary containment isolation system.

The event was caused by misleading notes on drawings which resulted in two conflicting equipment clearances being established simultaneously. The effect of these two clearances was to open the valve in the instrument line leading to the drywell pressure instrument. With this valve open, the air pressure applied to the valve for the LLRT was sensed in the instrument, resulting in the trip of the associated logic.

Corrective actions for this event will include revising the appropriate drawings, reviewing drawings for similar conditions, and revising the LLRT procedure to require that relay logic downstream of the affected pressure sensor be disabled before performing a leak rate test. These actions will be completed on both operating units before the next scheduled refueling outage.

## PLANT AND SYSTEM IDENTIFICATION

General Electric - Boiling Water Reactor
Energy Industry Identification System codes appear in the text as (EIIS Code XX).

## DESCRIPTION OF EVENT

On 3/14/2000 at 1318 EST, Unit 2 was in the refuel mode with the reactor vessel disassembled and the reactor cavity flooded to accommodate refueling operations. At that time, work involving the reactor protection system (RPS, EIIS Code JC) was in progress, and a clearance had been installed to de-energize part of the RPS power supply bus. This resulted in signals being present in several different logic systems including scram logic and primary containment isolation system (PCIS, EIIS Code JM) logic. Concurrently, local leak rate testing (LLRT) was in progress involving an air-operated valve (2E11-F041D) in an instrument line penetrating the primary containment. This valve was to have been closed per a clearance. When personnel performing the LLRT pressurized the line leading to 2E11-F041D, the drywell pressure instrument in this line tripped. It was later discovered that valve 2E11-F041D was open, which allowed test pressure to reach the instrument. Since this trip occurred in the channel opposite the RPS clearance, a full scram signal was completed. Also, a partial PCIS isolation signal was generated.

Main control room personnel observed an annunciator alarming on high pressure in the drywell and noted that a full scram signal had been received and that three valves had automatically closed in the primary containment isolation system. The full scram signal had no effect on reactivity because all the control rods had previously been inserted into the core in support of the refueling outage. The extent of the equipment actuations was determined by a post-event review of data recordings on the Safety Parameter Display System (SPDS, EIIS Code IQ).

Although the high drywell pressure signal was invalid, affected plant systems responded per design given the introduction of this signal into the logic. The systems affected by this event were RPS, both units' secondary containment isolation and standby gas treatment systems (EIIS Code BH), and three primary containment isolation valves. The affected valves were a vacuum breaker outboard isolation valve in the steam line leading to the high pressure coolant injection system (HPCI, EIIS Code BJ), an outboard isolation valve leading to the post-accident sampling system (PASS, EIIS Code IP), and the outboard isolation valve for the drywell floor drain (EIIS Code IJ). The penetrations involving PASS and HPCI were already isolated prior to the event because their inboard isolation valves were already closed. The valves responded per design given the signal generated by the drywell pressure instrument. Because the plant was in a refueling outage at the time and the involved systems and valves were not needed for plant operation, the affected valves were left in the isolated position. The affected ventilation systems were secured. There were no other actuations or consequences of this event.

## CAUSES OF EVENT

This event resulted from a combination of misleading drawings and by misleading notes on drawings. A contributing cause was inadequate coordination between two clearances.

Misleading notes on drawings caused this event by leading clearance personnel to believe that valve 2E41-F041D could be de-energized and isolated from its air supply without changing its position, regardless of whether it was in the open or closed position. Although the valve design will allow the valve to fail as-is in the closed position over a short time period, it is air-operated with a spring return to the open position. Hence, its position will not remain unchanged indefinitely if it is isolated electrically and pneumatically while in the closed position. Valve 2E11-F041D is associated with two pneumatic solenoid valves, 2E11-F219 and 2E11-F220, which supply a third "switching" valve which provides the pneumatic control pressure to 2E11-F041D. Per plant piping and instrument drawing H-26014, electrical elementary diagram H-27651, and plant electrical load list A-20182, de-energizing this solenoid and switching valve arrangement should cause 2E41-F041D to fail as-is. For short term power failures this is true; however, the arrangement is necessarily susceptible to some degree of pneumatic leakage on the control pressure side. The solenoid and switching valve arrangement per design ensures that this leakage will result in the valve returning to the open position to ensure the operability of the drywell pressure instrument. This was not made clear on the drawings referring to the valve.

The unclear drawing notes contributed to a lack of coordination between two clearances. The LLRT was performed on valve 2E11-F041D under clearance 2-00-174 which closed this valve by placing the control switch in the closed position and tagging the switch. This method of closing the valve was essential for preserving the validity of the LLRT. Subsequently, clearance 2-00-360 was released to de-energize solenoid valves 2E11-F219 and 2E11-F220 under the mistaken expectation that 2E11-F041D would not be affected. Since the valve was expected to maintain the closed position after the clearance was installed, there was less perceived risk of inadvertent system interactions and consequently the scope of background research was less extensive than it otherwise would have been.

## REPORTABILITY ANALYSIS AND SAFETY ASSESSMENT

This event is reportable per 10 CFR 50.73 (a)(2)(iv) because an event occurred that resulted in the unplanned actuation of an engineered safety feature. Specifically, an invalid signal was generated during an LLRT which caused the equipment actuations previously described in this report, one of which is required to be reported to the NRC, namely, the closure of the drywell floor drain isolation valve.

The drywell floor drain isolation valve is part of the primary containment isolation system (PCIS). The PCIS is designed to isolate lines penetrating containment when conditions indicate the possibility of a leak from the reactor coolant system into the containment. PCIS valves are divided by design into several groups. The valve involved in this event is known as a "Group 2" valve. Valves in the Group 2 PCIS are

generally those valves open to the drywell atmosphere but which do not communicate directly with the reactor coolant system. The drywell floor drain is also part of the primary containment leakage detection system (EIIS Code IJ). When minor equipment leakage inside primary containment occurs, it will collect in the floor drain which is periodically emptied to the radwaste building for treatment. In the event that the primary containment needs to be isolated, such as when high drywell pressure occurs, the drywell floor drain isolation valve will automatically close to prevent postulated fission products from escaping.

In this event, an invalid signal was received indicating the presence of high pressure in the drywell. All affected systems, including the drywell floor drain valve, responded per design given this signal. Had this event occurred under other operating conditions, the drain would have closed in the same manner. In addition, other valves in the Group 2 PCIS would have closed as well.

Valve 2E11-F041D and similar valves in similar penetrations were designed generally to comply with Atomic Energy Commission Regulatory Guide 1.11 (March 1971) for instrument lines penetrating primary containment. The design for valve 2E11-F041D will permit the valve to remain temporarily in the closed position on loss of power or pneumatic pressure, although as discussed previously, it cannot stay in the closed position indefinitely under these circumstances. This valve is normally open in plant operation and has no automatic isolation function. Per Hatch Unit 2 Final Safety Analysis Report (FSAR) section 6.2.4.3.3.2, the instrument served by this valve has an important function during and after a hypothetical accident, namely, to measure drywell pressure. Thus, the design preference for positioning this valve is to the open position. In the unlikely event of a failure of the valve such that it needed to be closed but drifted open, a restricting orifice in the instrument line would limit releases to the secondary containment ensuring that 10 CFR 100 limits were not violated.

Based on this analysis, it is concluded that this event had no adverse impact on nuclear safety. This analysis applies to all operating conditions.

## CORRECTIVE ACTIONS

The following actions affect Unit 2 only and must be completed prior to the next scheduled refueling outage:

1. Appropriate plant drawings will be revised to explain the failure modes of valves 2E11-F041A/B/C/D upon loss of power or control signal. These include piping and instrument diagram H-26014, elementary diagram H-27651, and plant electrical load list A-20182. Refer to Attachments A, B, & C.

2. Other air-operated PCIS valves designated "fail as-is" will be reviewed to determine whether similar drawing notes exist for those valves. If any problems are found, they will be corrected as they are identified. No such valves exist on Unit 1.

3. The appropriate steps in procedure 42SV-TET-001-2S, "Primary Containment Periodic Type B and Type C Leakage Tests," will be revised to require that the logic downstream of drywell pressure sensors be disabled before testing valves 2E11-F041A-D.

4. To address the clearance coordination issues, a review will be performed on previous events associated with ESF actuations that appear to have resulted from clearance coordination problems. Additional actions may be taken as necessary as a result of this review. This review will be completed by September 1, 2000.

ADDITIONAL INFORMATION

1. Other Systems Affected: No systems were affected by this event other than those which have already been mentioned in this report.

2. Failed Components Information: No failed components contributed to or resulted from this event.

3. Commitments Information: This report does not create any permanent licensing commitments.

4. Previous Similar Events: One event has been reported in the past two years in which drawing problems led to clearance problems and an unexpected actuation of engineered safety features. This event was reported in LER 50-321/1999-001. In that event, a piping diagram for the plant's instrument air system failed to state that closing a certain valve would isolate the scram air header. Consequently, when the valve was closed per the clearance, the scram air header was depressurized resulting in the scram discharge volume vent and drain valves closing. When the volume filled due to normal control rod drive (EIIS Code AA) leakage, an automatic scram resulted. The corrective action for that event was revising the drawing. Revising the instrument air drawings in this manner would not have prevented this event because the involved components, logic, and drawings were unique to each event.

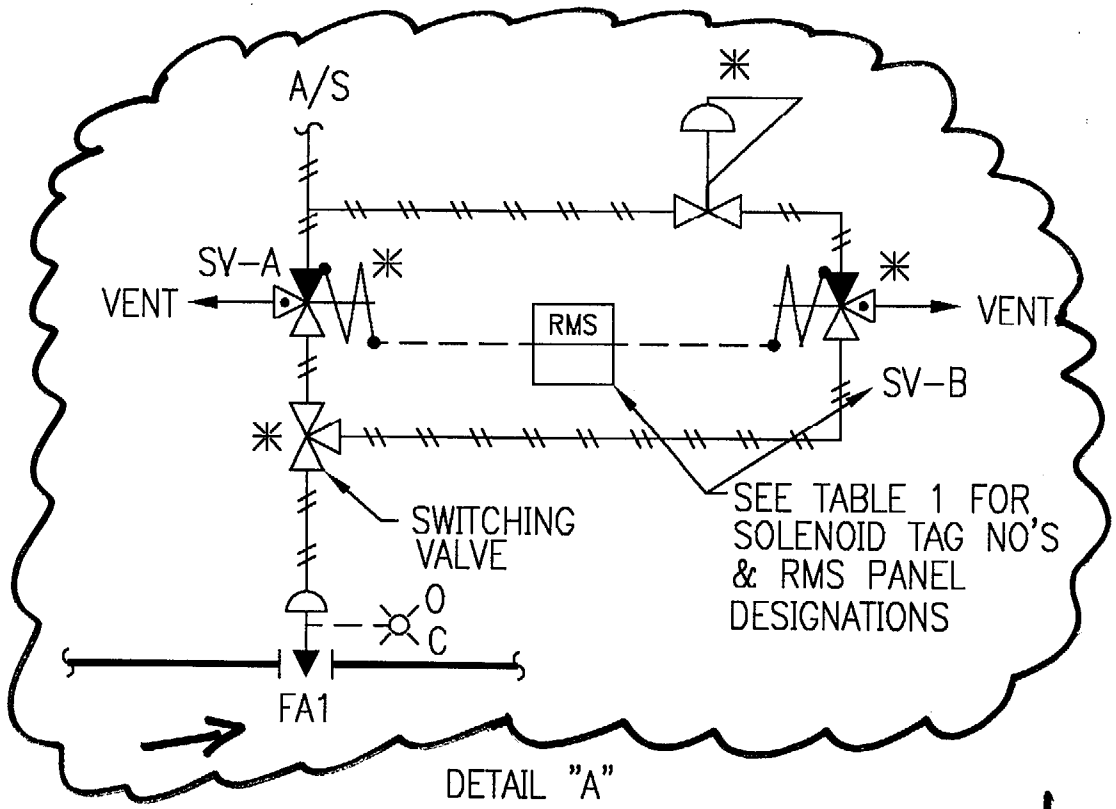


DETAIL "A"

TYP. FOR F041A, B, C, & D

| VALVE NO. | RMS | SV-A | SV-B |
|---|---|---|---|
| 2E11-F041A | 2H11-P657 | SV-F213 | SV-F214 |
| 2E11-F041B | 2H11-P654 | SV-F215 | SV-F216 |
| 2E11-F041C | 2H11-P657 | SV-F217 | SV-F218 |
| 2E11-F041D | 2H11-P654 | SV-F219 | SV-F220 |

TABLE 1

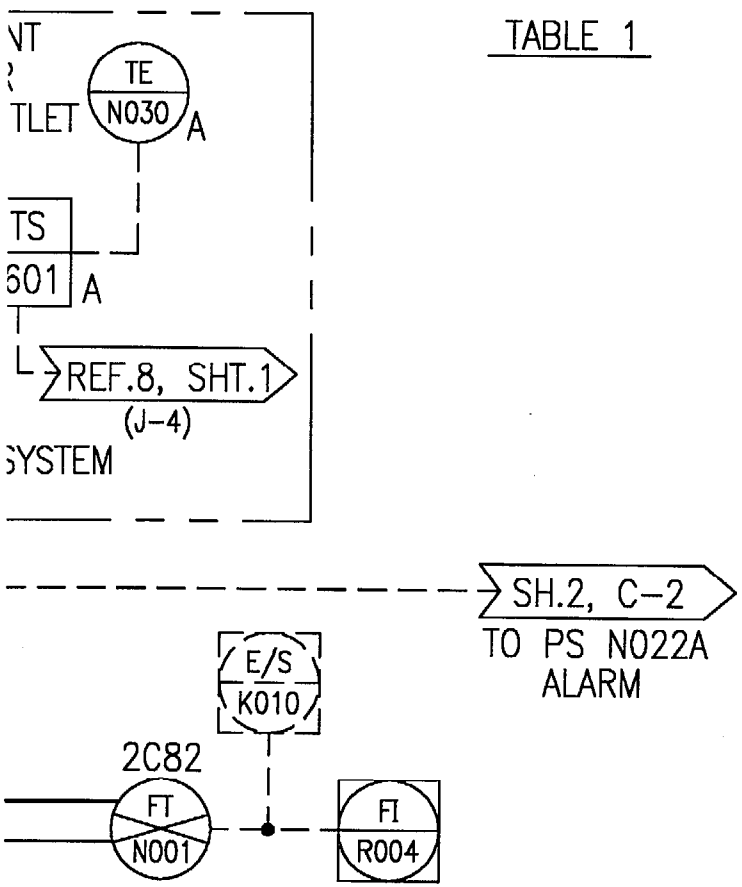


REFERENCES (CONT.)

| | | |
|---|---|---|
| 23. RHR SERVICE WATER P&ID | 2E11-1100 | H-21039 |
| 24. POST LOCA HYDROGEN RECOMBINER P&ID | 2T49-1010 | H-26068 |
| 25. EQUIP. & VALVE DRAINAGE P&ID | 2T45-1030 | H-26077 |
| LEGEND: CA-----CONTROLL AMPLIFIER CONT---CONTROLLER | | |
| 26. DIGITAL INPUT SIGNALS TO THE ERF COMPUTER SYS. I.E.D. SHT. 3 OF 15 | 2X75-1010 | H-26165 |
| 27. DIGITAL INPUT SIGNALS TO THE ERF COMPUTER SYS. I.E.D. SHT. 4 OF 15 | 2X75-1010 | H-26166 |

ATTACHMENT A

PAGE OF P&ID H26014

09:45:45 AM 4/10/00 JLONTIN

SENSING LINE ISOLATION VALVES
SCHEME 97 (DIV I)

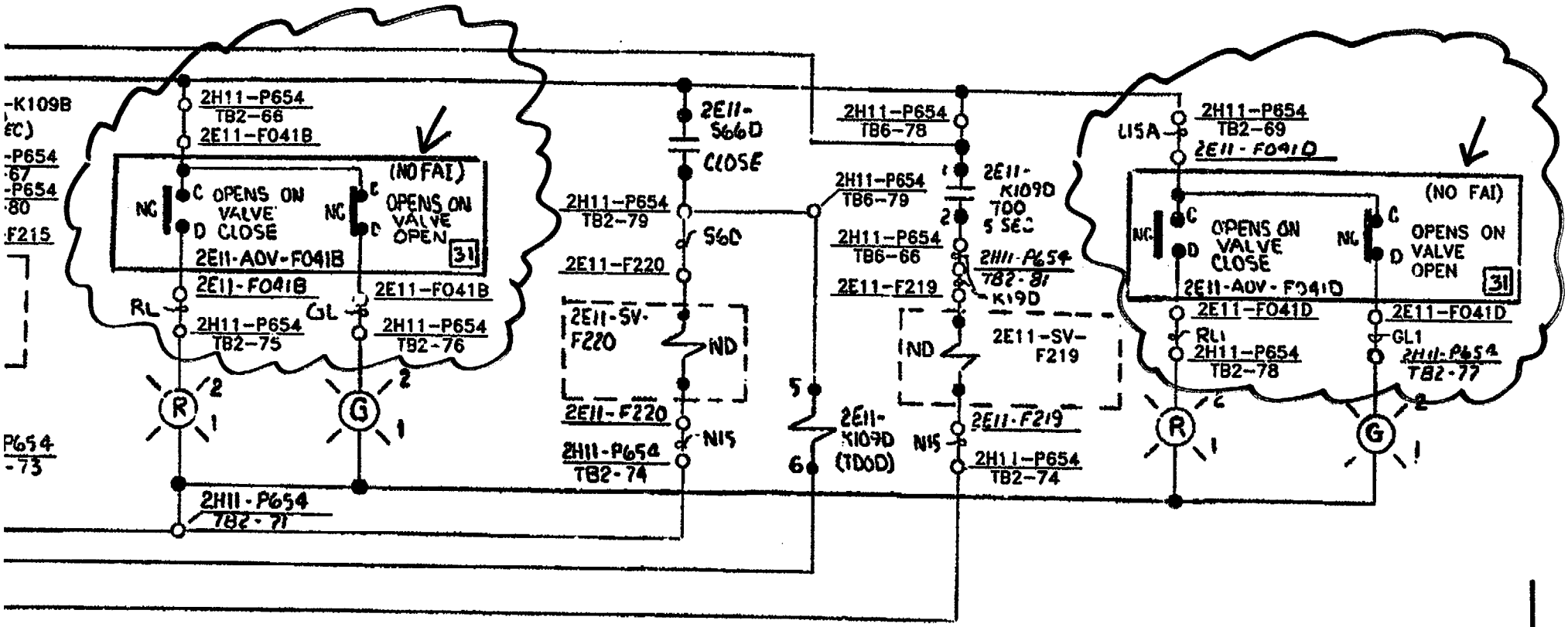


AO VALVE 2E41-F041D

SENSING LINE ISOLATION VALVES
SCHEME 98 (DIV. II)

ATTACHMENT B
PART OF H27651
ELEMENTARY DIAGRAM

09:54:26 AM 4/10/00 JLONTIN

ATTACHMENT C

BREAKER 15 Continued

21. Loss of power to 2E11-F215 and 2E11-F216, Controlling Valves for Air Operated Valve 2E11-F041B, Drywell Pressure Sensing Line Isolation Valve. 2E11-F041B fails as is.

22. Loss of power to indicating lights for 2E11-F041B on panel 2H11-P654.

23. Loss of power to 2E11-F219 and 2E11-F220, Controlling Valves for Air Operated Valve 2E11-F041D, Drywell Pressure Sensing Line Isolation Valve. 2E11-F041B fails as is.

24. Loss of power to associated indicating lights for 2E11-F041D on panel 2H11-P654.

25. Loss of power to 2T48-R613B, Flow Indicating Controller on panel 2H11-P654 resulting in the loss of control of 2T48-F112B, Drywell/Torus Post LOCA Nitrogen Makeup Flow Control Valve.

26. Loss of power to 2T48-N014B, Nitrogen Make-up Flow Indicating Transmitter locally mounted.

27. Loss of power to 2T48-R614, Drywell and Torus Make-up Flow Recorder on panel 2H11-P654.

28. Loss of power to 2T48-R615B, Flow Indicating Controller on panel 2H11-P654 resulting in the loss of control of 2T48-F336B, Drywell Ventilation Exhaust Flow Control Valve.

29. Loss of power to 2T48-N017B, Drywell Vent Flow Indicating Transmitter locally mounted.

30. Loss of power to 2T48-R619, Drywell Vent Flow Recorder on panel 2H11-P654.

31. Loss of power to 2T48-R616B, Flow Indicating Controller on panel 2H11-P654 resulting in the loss of control of 2T48-F337B, Torus Ventilation Exhaust Flow Control Valve.

32. Loss of power to 2T48-N018B, Torus Vent Flow Indicating Transmitter locally mounted.

# SITE MANAGEMENT REVIEW SHEET

| Fax to: | From: |
|---|---|
| John Lontine<br>Hatch Licensing<br>Extension 5223<br># Pages: 1 | Steve Reed<br>Hatch NSAC<br>Phone: 8-692-2910 |

DOCUMENT TO BE REVIEWED:

( ) REVISION OF TECHNICAL SPECIFICATIONS:

( ) RESPONSE TO VIOLATION:

(X) LER NUMBER/TITLE: 2-00-002 Unclear Drawings Result in ESF Actuation

( ) OTHER:

COMMENTS: Due Corporate: 04/4/2000 Due NRC: 04/13/2000

Please contact Steve Reed, ext. 2910 or beeper 844. Thanks!

THE FOLLOWING MANAGERS CONCUR WITH THE INFORMATION PROVIDED AND THE COMMITMENT(S) MADE FOR THEIR AREAS OF RESPONSIBILITY.

| ENGINEERING SUPPORT | PLANT ADMINISTRATION | HEALTH PHYSICS AND CHEMISTRY | MAINTENANCE | NUCLEAR SAFETY AND COMPLIANCE |
|---|---|---|---|---|
| 4/6/00 | / / | / / | / / | Tom Pretzler for<br>3/30/2000 |

| NUCLEAR SECURITY | OPERATIONS | OUTAGES AND PLANNING | TRAINING AND EMERGENCY PREP | PLANT MOD AND MAINT SUPPORT |
|---|---|---|---|---|
| / / | / / | / / | / / | / / |

THE FOLLOWING CONCURRENCE IS REQUIRED AS INDICATED IF POLICY, COST, SCOPE OR SCHEDULE IS INVOLVED WITH FOLLOW-UP ACTION FOR THIS ITEM.

| PLANT OPERATIONS ASST. GENERAL MANAGER | PLANT SUPPORT ASST. GENERAL MANAGER | NUCLEAR PLANT GENERAL MANAGER |
|---|---|---|
| / / | CT Moore<br>4/6/00 | 4/6/00 |

MGR-0006r