Commonwealth Edison Company
LaSalle Generating Station
2601 North 21st Road
Marseilles, IL 61341-9757
Tel 815-357-6761

ComEd

April 11, 2000

United States Nuclear Regulatory Commission
Attention: Document Control Desk
Washington, D.C. 20555

LaSalle County Station, Units 1 and 2
Facility Operating License Nos. NPF-11 and NPF-18
NRC Docket Nos. 50-373 and 50-374

Subject: Submittal of Relief Request PR-12

LaSalle County Station performs InService Inspections in accordance with the American Society of Mechanical Engineers (ASME) Boiler and Pressure Vessel Code, Section XI, "Rules for Inservice Inspection of Nuclear Power Plant Components," 1989 Edition. The enclosed relief request addresses requirements in Table, IWC-2500-1, "Examination Category C-H, All Pressure Retaining Components."

Section XI requires periodic examinations of pressure retaining piping and components for evidence of leakage during system pressure testing. Relief is request PR-12 requests relief from certain Code required examinations of the Hydrogen Recombiner system piping. Relief is being requested pursuant to 10 CFR 50.55a(a)(3)(ii), on the basis that compliance with the ASME Section XI Code requirements is deemed to be a hardship or unusual difficulty without a compensating increase in the level of quality or safety.

Relief request PR-12 is applicable to both Units 1 & 2. ComEd requests approval of this request by September 1, 2000 to support our eighth Unit 2 refueling outage (L2R08), which is scheduled to begin on November 10, 2000. In addition, ComEd requests that the relief extend throughout the remainder of the Second 10-Year InService Inspection Interval.

A047

Should you have any questions concerning this letter, please contact Mr. Frank A. Spangenberg, III, Regulatory Assurance Manager, at (815) 357-6761, extension 2383.

Respectfully,

for

Charles G. Pardee
Site Vice President
LaSalle County Station

Attachment

cc: Regional Administrator - NRC Region III
NRC Senior Resident Inspector - LaSalle County Station

COMPONENT IDENTIFICATION

Code Class:	2
References:	Table IWC-2500-1
Examination Category:	C-H
Item Numbers:	C7.30, C7.40, C7.80
Description:	Hydrogen Recombiner System Piping
Component Numbers:	HG Unit Cross-Tie Piping

CODE REQUIREMENTS

Table IWC-2500-1 requires a Visual VT-2 examination be performed during a system pressure test.

BASIS FOR RELIEF

Pursuant to 10 CFR 50.55a(a)(3)(ii), relief is requested on the basis that compliance with ASME Section XI requirements is deemed to be a hardship or unusual difficulty without a compensating increase in the level of quality or safety.

Relief is requested from the VT-2 Visual examination requirements as specified in Table IWC-2500-1 for the Hydrogen Recombiner System, specifically the unit cross-tie piping. System Piping is depicted on page 3 in Figure PR-12.1. The performance of a Flow Make-up pressure test on unit cross tie piping would include as a boundary, valves that are not subject to Appendix J Testing, therefore some small amount of seat leakage is likely. If such leakage did occur, application of a leak detection solution to the entire surface of the cross tie piping would be required in order to ensure no through wall-leakage existed. IWC-5210(b) of the Code states that: When gas is the pressurizing medium, the test procedure shall include methods for detection and location of through-wall leakage. This would result in hardship due to the long runs of unit cross tie piping located in the overhead. An estimated 600 man hours and accumulated dose of 1.25 Rem would be required to erect scaffolding and perform a leakage test of cross tie piping. Further, scaffolding would have to be erected around several sensitive instrument racks and systems that if jarred could result in a unit trip or other challenges to the operators.

PROPOSED ALTERNATE EXAMINATION

The Hydrogen Recombiners, including the unit cross ties, are functionally tested every refuel outage to verify system temperature, pressure and flow requirements are met to ensure operability. In addition the system is tested to the requirements of 10CFR50 Appendix J, "Primary Reactor Containment Leakage Testing for Water-Cooled Power Reactors, Option B – Performance - Based Requirements," and the LaSalle IST Program to insure operational readiness. The frequency at which the above mentioned tests are performed significantly exceeds those required by Table IWC-2500-1.

The Hydrogen Recombiner System will be Pressure Tested and VT-2 Visual examinations will be performed once per period as specified in Table IWC-2500-1, with the exception of the unit cross tie piping. However, if any through-wall leakage is detected during these tests additional Pressure Testing shall be performed on unit cross tie piping to the extent specified in Table IWC-2500-1.

IMPLEMENTATION SCHEDULE

Relief is requested for the second ten-year interval of the Inservice Inspection Program for LaSalle Units 1 and 2.

Relief is requested for the Hydrogen Recombiner System Cross-Tie piping listed below:

1. From 1HG002B valve to 2HG002A valve.
2. From 1HG002A valve to 2HG002B valve.
3. From 1HG009 valve to 2HG006B valve.
4. From 1HG006B valve to 2HG009 valve.

Appendix J testing is performed on all containment isolation valves.

Pressure testing is performed on recombiner skids (dashed areas) and associated piping.

Pressure testing is performed on all piping from containment up to the first isolation valves.
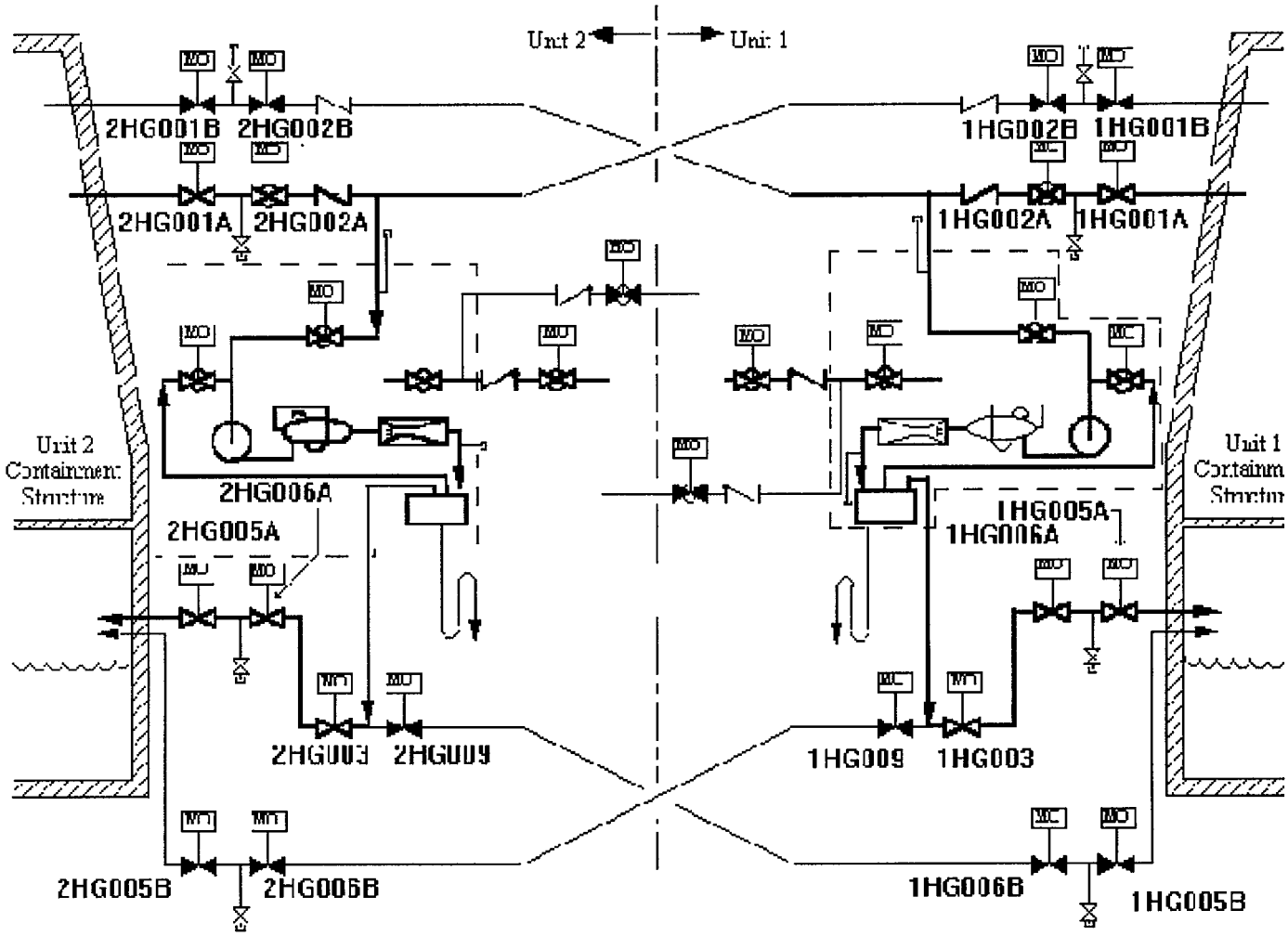
Figure PR-12.1