Lewis Sumner
Vice President
Hatch Project Support

Southern Nuclear
Operating Company, Inc.
40 Inverness Parkway
Post Office Box 1295
Birmingham, Alabama 35201

Tel 205.992.7279
Fax 205.992.0341

SOUTHERN COMPANY
Energy to Serve Your World℠

May 14, 1999

Docket Nos. 50-321
50-366

HL-5763

Mr. John C. Hoyle, Secretary
U. S. Nuclear Regulatory Commission
ATTN: Document Control Desk
Washington, D. C. 20555-0001

Edwin I. Hatch Nuclear Plant
Recirculation System Pressure Boundary Licensing Report
Product Submittal to NRC

Dear Ladies and Gentlemen:

Southern Nuclear Operating Company (SNC) is submitting the attached Recirculation System Pressure Boundary Licensing Report to provide the NRC with an example of the technical content and level of detail that Plant Hatch is planning for its application for License Renewal. The report was generally developed using the process described in our April 13, 1998, letter to the NRC, "License Renewal Process Methodology Document." We expect the format of this report to be similar to the format that will be followed in the application; however, it may be organized differently for a full application.

This licensing report was developed under a collaborative effort with PECO Energy and Northern States Power. The goal of this collaborative effort was to develop a report format that all three licensees could use to submit similar information without significant revision, should they elect to pursue an application. This report presents the technical information formatted specifically for Plant Hatch. Similar licensing reports by other licensees developed from the same technical information would tend to reduce both utility and NRC resource requirements.

SNC is planning for its license renewal application, if submitted, to be a first-of-a kind electronic docket submittal. This licensing report also represents an example of this type of submittal. The hard-copy contains underlined words which represent links to other portions of

REC'D BY SECY
19 MAY 99 11:10

DF01
per W. Burton

the document. The enclosed diskette contains the electronic version of this licensing report in HTML format.

SNC requests the NRC review the enclosed report for its level of detail and technical content with a view that SNC would use this report as a template for the technical material related to Class 1 piping systems in the application, if submitted. SNC believes that the enclosed recirculation system licensing report meets the information requirements of 10 CFR 54.21(a), "Contents of application-technical information," and provides an adequate level of detail for the demonstration required by 10 CFR 54.29(a)(1), "Standards for issuance of a renewed license." SNC would like to receive any "requests for additional information" concerning this report by June 1, 1999 and resolve them by August 1, 1999 in order to support ongoing internal activities toward development of an application by the end of 1999.

Respectfully submitted,

H. L. Sumner, Jr.

Enclosures:
Reactor Recirculation System Pressure Boundary Components
Diskette with HTML version of above report

HLS/JEH

cc Southern Nuclear Operating Company
Mr. P. H. Wells, General Manager - Plant Hatch

U. S. Nuclear Regulatory Commission, Washington, DC
Mr. L. N. Olshan, Project Manager - Hatch

U. S. Nuclear Regulatory Commission, Region II
Mr. L. A. Reyes, Regional Administrator
Mr. J. T. Munday, Senior Resident Inspector – Hatch

Edwin I. Hatch Nuclear Plant, Units 1 and 2

Reactor Recirculation System Pressure Boundary Components

Demonstration of Compliance
With The Requirements Of 10 CFR 54,
the License Renewal Rule

Table of Contents

		Page
1.0	Introduction	1
2.0	Description of the Reactor Recirculation System and Its Intended Function	1
3.0	Reactor Recirculation System Pressure Boundary Components Subject to Aging Management Review	2
3.1	Evaluation Boundaries	2
3.2	Components Subject to Aging Management Review	5
3.3	Component Functions	7
4.0	Management of Aging Effects for License Renewal	7
4.1	Commodity Aging Effects Terminology	7
4.2	Commodities	7
4.2.1	Stainless Steel Large-bore Piping	8
4.2.2	Stainless Steel Small-bore Piping and Valve Bodies	9
4.2.3	Pump Casings	11
4.2.4	Large-bore Valve Bodies	12
4.2.5	Integral Attachments	13
4.2.6	Pressure Boundary Bolting	14
4.3	Management of Detrimental Aging Effects	15
4.3.1	Crack Initiation and Growth Due to Thermal Fatigue	16
4.3.2	Crack Initiation and Growth Due to IGSCC	19
4.3.3	Crack Initiation and Growth Due to Other Causes	23
4.3.4	Loss of Material Due to Crevice Corrosion or Pitting Corrosion	26
4.3.5	Loss of Fracture Toughness Due to Thermal Aging Embrittlement	28
4.3.6	Loss of Preload Due to Stress Relaxation	30
5.0	Aging Effects	33
5.1	Cracking	33
5.2	Loss of Material	38
5.3	Loss of Fracture Toughness	39
5.4	Loss of Preload	40
6.0	Aging Management Programs	40
6.1	Monitoring Programs	40
6.2	Mitigating Programs	45
6.3	Supporting Programs	47
7.0	Evaluation of Time Limited Aging Analysis	48
7.1	TLAA Issues and Exemptions That Require Evaluation	48
7.2	Evaluation of the Time Limited Aging Analysis Issues	48
8.0	Technical Specification Changes or Additions	49
9.0	References	49
10.0	Definitions	50

Tables

		Page
1	Components Reviewed and Evaluated in this Report	6
2	Stainless Steel Large-bore Piping Components Review of Plausible and Detrimental Aging Effects	9
3	Stainless Steel Small-bore Piping and Valves Review of Plausible and Detrimental Aging Effects	11
4	CASS Pump Casings Review of Plausible and Detrimental Aging Effects	12
5	CASS Large-bore Valve Bodies Review of Plausible and Detrimental Aging Effects	13
6	Pressure Boundary Bolting Review of Plausible and Detrimental Aging Effects	14
7	Reactor Recirculation System Aging Management Program Assessment	15
8	Aging Management Program Assessment of Crack Initiation and Growth Due to Thermal Fatigue in Stainless Steel Large-bore Piping	17
9	Aging Management Program Assessment Crack Initiation and Growth Due to IGSCC in Stainless Steel Small-bore Piping, Valve Bodies, and Pump Casings	21
10	Aging Management Program Assessment Crack Initiation and Growth Due to Other Causes in Small-bore Stainless Steel Piping	25
11	Aging Management Program Assessment Loss of Material Due to Crevice Corrosion or Pitting Corrosion in Small-bore Stainless Steel Piping	27
12	Aging Management Program Assessment Loss of Fracture Toughness Due to Thermal Aging Embrittlement of Stainless Steel Large-bore Valve Bodies and Pump Casings	29
13	Aging Management Program Assessment Loss of Preload Due to Stress Relaxation of Pressure Boundary Bolting	32

Figures

1.0	Unit 1 Evaluation Boundary Diagram	3
2.0	Unit 2 Evaluation Boundary Diagram	4

1.0 INTRODUCTION

This Recirculation System Report presents information required by §54.21[a] and [c], and §54.22 of the License Renewal Rule (Ref. 1), which is hereafter referred to as the "Rule." The report is a special product as discussed in SNC correspondence with the NRC dated January 15, 1998. Consequently, the scope of this report is narrowly focused. The report only addresses the pressure boundary for the Edwin I. Hatch Nuclear Plant (Plant Hatch) Units 1 and 2, Reactor Recirculation System (RRS). The report was produced using a preliminary version of the Plant Hatch process methodology (Ref. 2) for implementing the requirements of the Rule that was submitted to the NRC in April 1998. However, a detailed discussion of this methodology for identifying systems, structures, and components within the scope of the Rule and subject to an aging management review is beyond the scope of this report. This report also utilizes additional guidance from various NRC and industry documents generated subsequent to submittal of the Process Document. The process used by Plant Hatch in producing this document is consistent with the lessons learned from industry communications with the NRC staff and the generic guidance in NEI 95-10, "Revision 0, Industry Guideline on Implementing the Requirements of 10 CFR Part 54 - The License Renewal Rule," March 1996 (Ref. 3).

2.0 DESCRIPTION OF THE REACTOR RECIRCULATION SYSTEM AND ITS INTENDED FUNCTION

The Edwin I. Hatch Nuclear Plant (Plant Hatch) Units 1 and 2, Reactor Recirculation System (RRS) provides the driving flow for the reactor vessel jet pumps, which in turn provide reactor coolant flow and reactor power control. These components form a portion of the reactor coolant pressure boundary.

The RRS consists of two parallel loops, each consisting of a recirculation pump, suction and discharge block valves, piping, fittings, flow elements, and connections supporting flow, differential pressure, and temperature instrumentation. The system functions and requirements are described in the Edwin I. Hatch Nuclear Plant Unit 1 Final Safety Analysis Report (FSAR), Chapter 4 and Unit 2 FSAR, Chapter 5. The RRS interfaces with the Residual Heat Removal (RHR) and Reactor Water Cleanup (RWCU) systems to provide a flow-path in support of shutdown cooling, emergency low-pressure coolant injection (LPCI), RWCU and reactor water level control functions. The system is part of the reactor coolant pressure boundary. Therefore, it also functions to maintain the pressure boundary during normal operation, transients, and accident scenarios to prevent the release of radioactive liquid and gas.

The internal environment of the RRS pressure boundary is reactor water, at approximately 533°F and 1055 psia during normal plant operation. Water quality is maintained within specified limits. During plant conditions that require the operation of the shutdown cooling mode of RHR, reactor water can be cooled to approximately 117°F via the RHR heat exchangers and recirculated back to the reactor through the RRS piping. During plant shutdown conditions, the water temperature in this piping can be as low as 70°F. Hydrogen water chemistry (HWC) limits the RRS oxygen content to less

than 5 ppb. The external environment for the system is relatively non-aggressive because it is inerted with nitrogen during operation.

The design specification and applicable regulations required that these components be designed for pressure, thermal, dead and live loads, seismic, pipe break loads, and fracture prevention. Various piping stress reports identify the applied loads, load combinations, and safety factors that need to be considered to verify that operating conditions are consistent with the current licensing basis (CLB).

The Process Document (Ref. 2) was used to identify the RRS functions that are within the scope of the Rule (Ref. 1). The scoping process determined that the following functions are intended functions as defined by the Rule, and that the RRS is required to accomplish these intended functions:

- Maintain the reactor coolant pressure boundary integrity.
- Trip the Recirculation Pump Trip (RPT) breakers.

As stated in Section 1.0, this report only addresses the intended function of maintaining the reactor coolant pressure boundary integrity. The function of tripping the RPT breakers is beyond the scope of this report, but will be addressed in the renewal application for Plant Hatch, if submitted.

3.0 REACTOR RECIRCULATION SYSTEM PRESSURE BOUNDARY COMPONENTS SUBJECT TO AGING MANAGEMENT REVIEW

An initial review of the system was performed to identify the components that require an aging management review. These components were grouped into commodities to facilitate performance of the aging management reviews. The process document (Ref. 2) refers to this initial review as the "screening process." The results from applying the screening process to the RRS are described in this section. The second part of the integrated plant assessment (IPA), the aging management review of systems, structures, and components subject to aging management review, is described in Section 4.0 of this document.

3.1 Evaluation Boundaries

The evaluation boundaries for the RRS pressure boundary components are shown on Figure 1 for Unit 1 and Figure 2 for Unit 2. The system begins at the pipe weld connection to the reactor vessel nozzle/safe end assembly and includes the suction piping, suction valve body/bonnet, pump casing/cover, discharge valve body/bonnet, and discharge piping up to the weld connections to the reactor vessel nozzle/safe end assemblies. The connecting welds are part of the RRS. The associated flow venturis, drain/vent piping and valve bodies, and instrument piping and valve bodies are included in the evaluation boundary. Interfacing systems, piping and equipment supports, pipe whip restraints, pump/motor pedestal supports, electro-mechanical components and containment penetrations are not included in this review. Interfacing systems, structures and components will be addressed in the renewal application.

Figure No. 1
Unit 1 Reactor Recirculation Evaluation Boundary Diagram

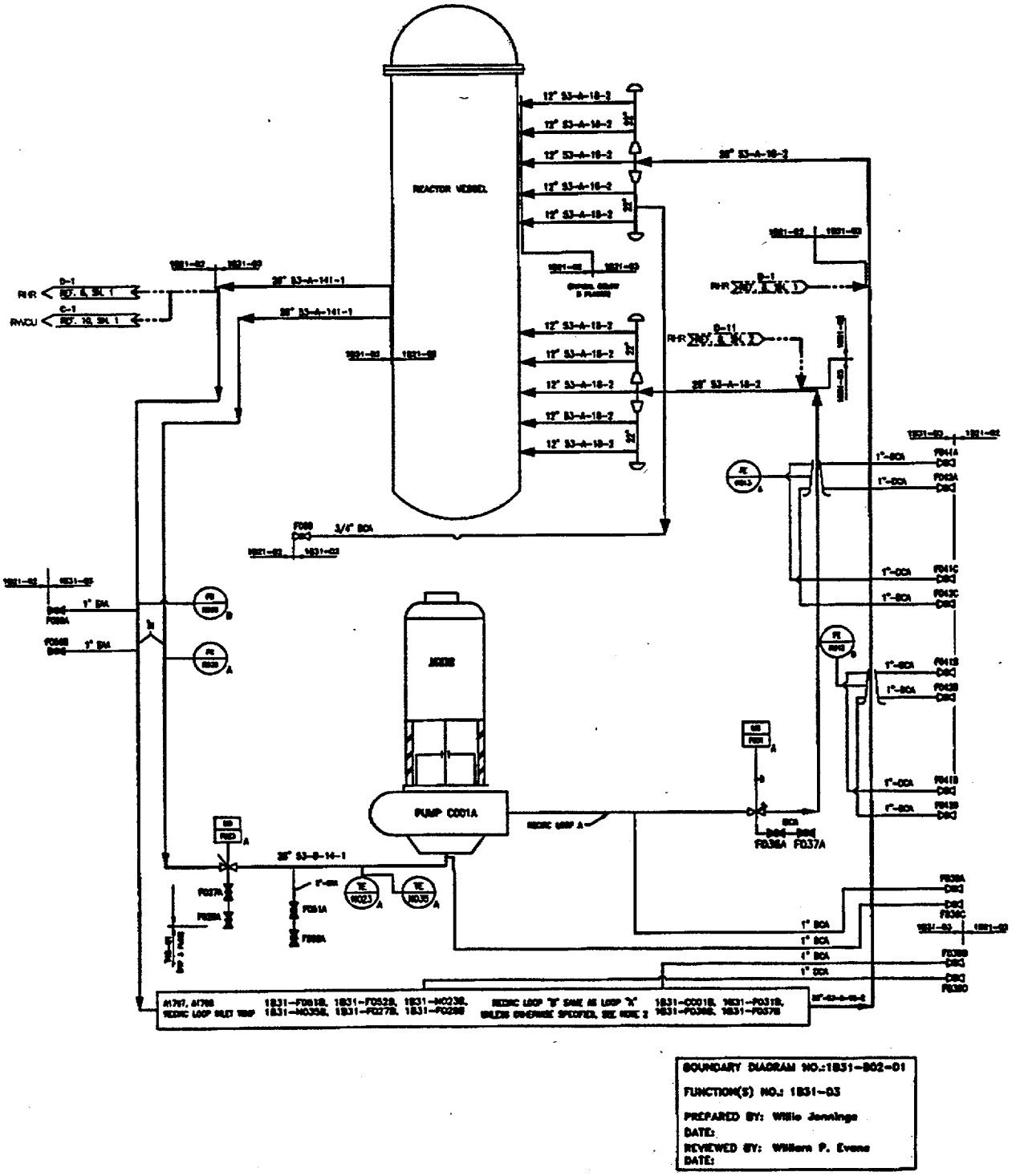

Figure No. 2
Unit 2 Reactor Recirculation Evaluation Boundary Diagram

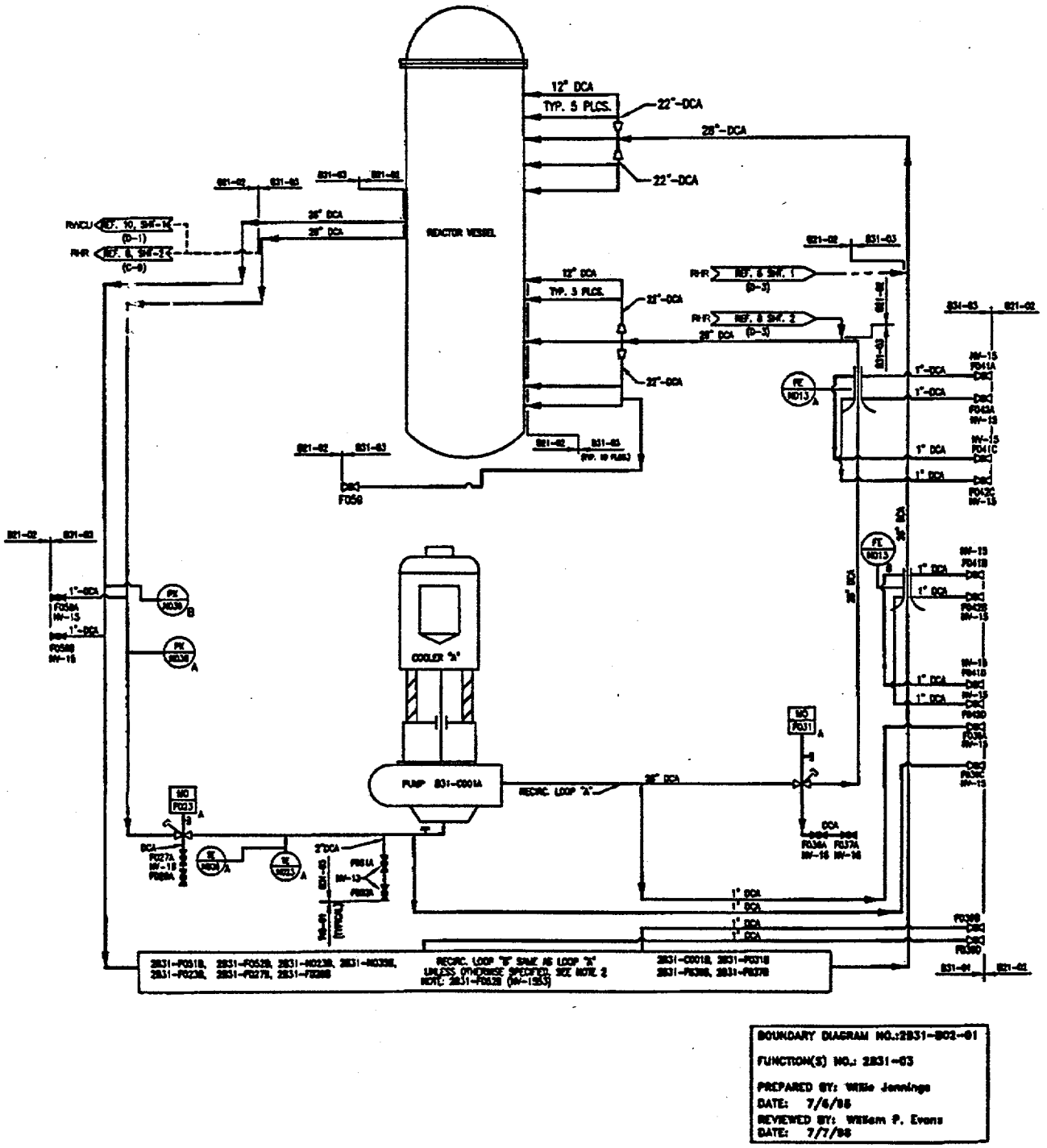

BOUNDARY DIAGRAM NO.:2B31-B02-01

FUNCTION(S) NO.: 2B31-03

PREPARED BY: Willie Jennings
DATE: 7/6/96
REVIEWED BY: William P. Evans
DATE: 7/7/96

3.2 Components Subject to Aging Management Review

Section 54.21(a)(1) of the Rule (Ref. 1) provides the requirements for identifying the RRS pressure boundary components within the evaluation boundary that are subject to aging management review. For this system, all of the pressure boundary components, with the exception of the recirculation pump seals, are passive, long-lived, and subject to aging management review. These components are listed in Table 1. The qualified life and replacement frequency for the recirculation pump seals are less than 40 years. Therefore, the seals are short-lived components and not subject to aging management review.

The pressure boundary components are grouped, as shown below, by type, material and/or size. These commodity groupings allow a more efficient review of the aging effects and facilitate the aging management review of some of the component groups.

- Stainless Steel Large-bore Piping
- Stainless Steel Small-bore Piping and Valve Bodies
- Pump Casings
- Large-bore Valve Bodies
- Integral Attachments
- Pressure Boundary Bolting

Table 1
Reactor Recirculation System
Components Reviewed and Evaluated in this Report

System Component	Component Boundary	Commodity Grouping
Recirculation Pumps	Casing and Cover Casing Bolts/Studs	Pump Casings Pressure Boundary Bolting
Discharge/Return Motor Operated Valves	Body and Bonnet Bonnet to Body Bolting	Large-bore Valve Bodies Pressure Boundary Bolting
Suction/Inlet Motor Operated Valves	Body and Bonnet Bonnet to Body Bolting	Large-bore Valve Bodies Pressure Boundary Bolting
Class 1 Large-bore Suction Piping	28 inch Piping from the Vessel Recirculation Suction Nozzle to the Pump Suction Nozzle Decontamination Connection	Stainless Steel Large-bore Piping
Class 1 Large-bore Discharge Piping	28 inch Piping from the Pump Discharge Nozzle through the 12 inch Risers to the Vessel Return Nozzles Flow Venturis Outer Housing Decontamination Connection	Stainless Steel Large-bore Piping
Integral Attachments	Welded Integral Attachments	Integral Attachments
Small-bore Piping	2 inch and under piping connected to large-bore suction and discharge piping for vents, drains, instruments (up to and including the first isolation valve), etc. Thermowells Flow Venturis Pressure Taps	Stainless Steel Small-bore Piping and Valve Bodies
Small-bore Manual Valves	Valve Body and Bonnet	Stainless Steel Small-bore Piping and Valve Bodies

3.3 Component Functions

Each of the components that make up the six commodity groups discussed in this report has two functions that support the intended function of maintaining the reactor coolant pressure boundary integrity. Those component functions are:

- Provide pressure boundary or fission product retention barrier to protect public health and safety in the event of any postulated design basis events.
- Provide a pressure retaining boundary so that sufficient flow and adequate pressure are delivered.

4.0 MANAGEMENT OF AGING EFFECTS FOR LICENSE RENEWAL

Section 54.21(a)(3) of the Rule (Ref. 1) requires an aging management review to demonstrate that the aging effects will be adequately managed so that the intended functions will be maintained consistent with the CLB for the extended period of operation. This section identifies:

a) the detrimental aging effects for the RRS components that are subject to aging management review, as determined in Section 3.0 of this report, and
b) aging management activities associated with the components.

4.1 Commodity Aging Effects Terminology

The plausible aging effects are identified and reviewed in this section. Available industry literature was reviewed to identify the plausible aging effects for the materials and environments applicable to RRS components. Industry operating experience, NRC generic communications, EPRI Report TR-103843 (Ref. 5), and Plant Hatch operating experience were also reviewed to ensure that all plausible aging effects for the relevant material/environment combinations have been identified.

Plausible aging effects that are determined to be applicable for Plant Hatch and that could cause sufficient degradation of the Structure, Component, or Commodity (SCC) to potentially result in a loss of the intended function are identified as detrimental aging effects requiring aging management. This process resulted in the listing of plausible and detrimental aging effects shown in Tables 2 through 5.

4.2 Commodities

The RRS components subject to aging management review, for the commodity groups identified in Section 3.2, are further discussed in the following sections.

4.2.1. Stainless Steel Large-bore Piping

Commodity Description

The RRS primary process piping is large-bore stainless steel piping, ranging from 12 inch to 28 inch. This commodity group also includes the outer housing of the flow venturis and decontamination connections.

The Unit 1 piping is designed to ANSI B31.7, Class 1, 1969 Edition and is made of Type 304 stainless steel. In response to concerns with intergranular stress corrosion cracking (IGSCC), a combination of Induction Heating Stress Improvement (IHSI) and Mechanical Stress Improvement Process (MSIP) was used to limit additional cracked weldments, and weld overlays were used to repair crack weldments. The weld overlays are made of ER308L grade stainless steel, an IGSCC resistant material. The filler metal for weld overlay repair of Inconel to stainless steel welds is Inconel 82, also an IGSCC resistant material. All weld overlay designs were prepared assuming a bounding 360-degree circumferential, crack-oriented through-wall flaw in accordance with the requirements of the "Standard Weld Overlay" design intended for indefinite service per NUREG-0313 (Ref. 4).

The Unit 2 piping was originally designed to ASME Section III, Class 1, 1971 Edition. In response to concerns with IGSCC, the large-bore piping was upgraded in 1984 from 304 stainless steel to 316NG stainless steel, which is more resistant to IGSCC. The replacement piping was designed and furnished to the ASME Section III, 1980 edition including addenda through winter 1981.

For both units, the internal environment is reactor water and the external environment is the drywell environment, which is benign. These environments are more completely described in Section 2.0 of this report.

Aging Effects

Plausible and Detrimental Aging Effects for Stainless Steel Large-bore Piping Components are listed in Table 2.

Crack initiation and growth due to thermal fatigue is described in Section 5.1. Crack initiation and growth due to thermal fatigue of the Class 1 stainless steel piping system is a detrimental aging effect for the large-bore piping and will be managed by the aging management program described in Section 4.3.1. Thermal fatigue is a time-limited aging analysis (TLAA) issue and is evaluated in Section 7.2.

Crack initiation and growth due to IGSCC is described in Section 5.1. Crack initiation and growth due to IGSCC of the Class 1 stainless steel piping system is a detrimental aging effect for the large-bore piping. Therefore, the aging management program described in Section 4.3.2 will be continued during the extended operating period to manage this aging effect.

Table 2
Stainless Steel Large-bore Piping Components
Review of Plausible and Detrimental Aging Effects

Plausible Aging Effects	*Plausible Aging Mechanisms*	*Effect/Mech. Is Detrimental?*	*Remarks*
Crack Initiation and Growth	Thermal Fatigue	Yes	Includes small-bore piping > 1 inch Evaluated as TLAA in Section 7.2 Aging management program is described in Section 4.3.1
	IGSCC	Yes	Aging management program is described in Section 4.3.2

4.2.2 Stainless Steel Small-bore Piping and Valve Bodies

Commodity Description

The RRS contains instrument and drain piping which is 2 inch and smaller, and numerous small valves in the instrumentation and drain lines. This commodity group also includes the pipe fittings, thermowells and pressure taps of the flow venturis.

The Unit 1 small piping is part of the original plant and is Type TP304 stainless steel. It was designed and furnished to ANSI B31.7, Class 1, 1969 Edition. The valves range in size from ¾ inch to 2 inches. They are forged valves, constructed of Type T304 stainless steel. The body to bonnet closure is welded.

The Unit 2 small piping is part of the original plant and is Type TP304 and TP316 stainless steel. It was designed and furnished to ASME Section III, Class 1, 1971 Edition. The valves range in size from ¾ inch to 2 inches. They are forged valves, constructed of Type T304 stainless steel. The body to bonnet closure is welded. Any small-bore piping that is or has been replaced at Plant Hatch since 1984 has been type TP304L or TP316L, which are IGSCC resistant grades.

On both units, the pipe fittings and the pressure tap connections are made of Type F304 stainless steel and the thermowells are constructed of Type F316 stainless steel.

For both units, the internal environment is reactor water and the external environment is the drywell environment, which is benign. These environments are more completely described in Section 2.0 of this report.

Aging Effects

Plausible and Detrimental Aging Effects for Stainless Steel Small-bore Piping and Valve Bodies Components are listed in Table 3.

Crack initiation and growth due to thermal fatigue is described in Section 5.1. Small-bore (less than 1 inch) stainless steel piping and valve bodies are designed to withstand at least 7,000 full thermal cycles. The small-bore stainless steel components in the RRS will not experience 7,000 cycles during 60 years of operation. Therefore, crack initiation and growth due to thermal fatigue of small-bore stainless steel piping and valve bodies 1 inch and under is not a detrimental aging effect. Small-bore piping and valve body components 2 inches in diameter are included in the Stainless Steel Large-bore Piping commodity for evaluation of crack initiation and growth due to thermal fatigue.

Crack initiation and growth due to IGSCC is described in Section 5.1. Type 316 stainless steel, which some of the Unit 2 small-bore piping is made from, is resistant but not immune to crack initiation and growth due to IGSCC. The Unit 1 small-bore piping and some of the Unit 2 small-bore piping are made from Type 304 stainless steel. Crack initiation and growth due to IGSCC has not been observed in the small-bore welded joints or heat affected zones of Type 304 stainless steel at Plant Hatch. However, this is the same material and environment as the Plant Hatch large-bore piping welded joints that were found to have cracks attributed to IGSCC. Therefore, crack initiation and growth due to IGSCC will be treated as a detrimental aging effect for stainless steel small-bore piping and valve body components at Plant Hatch. The aging management program described in Section 4.3.2 will be continued, during the extended operating period, to manage this aging effect for the small-bore stainless steel piping and valve bodies.

Crack initiation and growth due to other causes is described in Section 5.1. The aging management program described in Section 4.3.3 will be continued, during the extended operating period, to manage crack initiation and growth for the small-bore stainless steel piping.

Loss of material due to crevice corrosion or pitting corrosion is described in Section 5.2. This aging effect is prevented from occurring in the small-bore stainless steel piping and valves at Plant Hatch by the aging management program described in Section 4.3.4. Because an aging management program is required to prevent this aging effect, it is considered a detrimental aging effect for the small-bore stainless steel piping and valves.

Table 3
Small-bore Stainless Steel Piping and Valves
Review of Plausible and Detrimental Aging Effects

Plausible Aging Effects	*Plausible Aging Mechanisms*	*Effect/Mech. Is Detrimental?*	*Remarks*
Crack Initiation and Growth	Thermal Fatigue	No	RRS Components will not exceed 7,000 cycles in 60 years
	IGSCC	Yes	**Aging management program is described in Section 4.3.2**
	Other	Yes	**Aging management program is described in Section 4.3.3**
Loss of Material	Crevice Corrosion Pitting Corrosion	Yes	Aging management program is described in Section 4.3.4

4.2.3 Pump Casings

Commodity Description

The recirculation pumps are variable speed, motor driven pumps, each rated at 45,200 gpm. The pump casing and cover form part of the RRS pressure boundary These components are constructed of statically-cast austenitic stainless steel (CASS): ASTM A351 Gr. CF8M (Unit 1) and ASME SA351 Gr. CF8M (Unit 2). The certified material test reports, submitted with these pumps, indicate that the maximum percentage of delta ferrite in any of these components is 14 percent. The Unit 1 reactor recirculation pumps were designed and furnished to the ASME Boiler and Pressure Vessel (B&PV) Code, Section III, 1968 Edition; and, the Unit 2 reactor recirculation pumps were designed and furnished to the ASME Standard Code for Pumps and Valves for Nuclear Power, 1968 draft Edition. For both units, the internal environment is reactor water and the external environment is the drywell environment, which is benign. These environments are more completely described in Section 2.0 of this report.

Aging Effects

Plausible and Detrimental Aging Effects for Pump Casings are listed in Table 4.

Crack initiation and growth due to IGSCC is described in Section 5.1. The Plant Hatch pump casing material is constructed from CASS. Crack initiation and growth due to IGSCC is not a detrimental aging effect for the pump casings satisfying the boundaries of Figure 4 in ASTM STP 756 (Ref. 7). All but one of these pumps at Hatch have a material content which satisfies the boundaries of Figure 4 of ASTM STP 756. One pump, 2B31-C001A, requires an aging management program due to its higher carbon content. The aging management program for this pump is discussed in Section 4.3.2.

Loss of fracture toughness due to thermal aging embrittlement of CASS is described in Section 5.2. Loss of fracture toughness due to thermal aging embrittlement of the pump casing is a detrimental aging effect at Plant Hatch. The aging management program for these pumps is discussed in Section 4.3.4.

Table 4
CASS Pump Casings
Review of Plausible and Detrimental Aging Effects

Plausible Aging Effects	*Plausible Aging Mechanisms*	*Effect/Mech. Is Detrimental?*	*Remarks*
Crack Initiation and Growth	IGSCC	Yes	Aging management program for 2B31-C001A is described in Section 4.3.2
Loss of Fracture Toughness	Thermal Aging Embrittlement	Yes	Aging management program is described in Section 4.3.5

4.2.4 Large-bore Valve Bodies

Commodity Description

The recirculation pump suction and discharge valves are 28" motor operated gate valves. The Unit 1 valves were designed and furnished to ASME B&PV Code Section III, 1968 edition; and the Unit 2 valves were designed and furnished to the ASME Standard Code for Pumps and Valves for Nuclear Power, 1968 draft Edition. The valve body and the bonnet form part of the recirculation system pressure boundary. These CASS components were statically-cast and are constructed of: ASTM A351 Gr. CF8M (Unit 1) and ASME SA-351 Gr. CF8M (Unit 2). Certified material test reports, submitted with these valves, indicate that the maximum percentage of delta ferrite in any of these components is 16 percent. For both units, the internal environment is reactor water and the external environment is the drywell environment, which is benign. These environments are more completely described in Section 2.0 of this report.

Aging Effects

Plausible and Detrimental Aging Effects for large-bore valve bodies are listed in Table 5.

Crack initiation and growth due to IGSCC is described in Section 5.1. The large-bore valve bodies are constructed from CASS. Crack initiation and growth due to IGSCC is not a detrimental aging effect for the valve bodies satisfying the boundaries of Figure 4 in ASTM STP 756 (Ref. 7). All but one of these valve bodies, have a material content which satisfies the boundaries of Figure 4 of ASTM STP 756. One valve body, 1B31-

F031A, requires an aging management program due to its higher carbon content. The aging management program for this valve body is discussed in Section 4.3.2 .

Loss of fracture toughness due to thermal aging embrittlement of CASS is described in Section 5.2. Loss of fracture toughness due of to thermal aging embrittlement the large-bore valve bodies is a detrimental aging effect at Plant Hatch. The aging management program for these valve bodies is discussed in Section 4.3.5.

Table No. 5
CASS Large-bore Valve Bodies
Review of Plausible and Detrimental Aging Effects

Plausible Aging Effects	*Plausible Aging Mechanisms*	*Effect/Mech. Is Detrimental?*	*Remarks*
Crack Initiation and Growth	IGSCC	Yes	Aging management program for 1B31-F031A is described in Section 4.3.2
Loss of Fracture Toughness	Thermal Aging Embrittlement	Yes	Aging management program is described in Section 4.3.5

4.2.5 Integral Attachments

Commodity Description

The RRS pressure boundary also contains integral attachments for the supports. The integral attachments for both units are made from plate material (type 304 stainless steel) and attached to the pressure boundary with a full penetration weld. They are not exposed to the process environment. Integral attachments (or lugs) are used for connecting component supports to the large-bore piping and pump casings. They are also used to support the component thermal insulation.

Aging Effects

There are no plausible aging effects for integral supports in non-aggressive environments. Therefore, there are no detrimental aging effects for the integral attachments. No further review of aging effects on the integral attachments is required for the extended operating period.

4.2.6 Pressure Boundary Bolting

Commodity Description

The pump casing to cover bolting and large-bore valve body to bonnet bolting is part of the pressure boundary. The bolts/studs and nuts are constructed of stainless steel material. The bolts/studs and nuts are not exposed to the reactor coolant environment. They are exposed to the drywell environment, which is benign.

Aging Effects

Plausible and Detrimental Aging Effects for Pressure Boundary Bolting are listed in Table 6.

Loss of preload to stress relaxation is described in Section 5.4. The high temperatures that Class 1 bolting is exposed to can result in a loss of preload. Loss of preload due to stress relaxation of the pressure boundary bolting is a detrimental aging effect at Plant Hatch. The aging management program for this aging effect is discussed in Section 4.3.6.

Table No. 6
Pressure Boundary Bolting
Review of Plausible and Detrimental Aging Effects

Plausible Aging Effects	*Plausible Aging Mechanisms*	*Effect/Mech. Is Detrimental?*	*Remarks*
Loss of Preload	Stress Relaxation	Yes	Aging management program is described in Section 4.3.6

4.3 Management of Detrimental Aging Effects

Section 4.2 identified the aging effects that require aging management. The affected commodity grouping and the detrimental aging effect(s) to be managed are listed below. The aging management programs that will be used to manage these effects are summarized in Table 7 and discussed in the following sections.

Table 7
Reactor Recirculation System
Aging Management Review Summary

Section No.	Aging Effect	Pressure Boundary Component Grouping	Aging Management Programs Required for License Renewal [a]
4.3.1	Crack Initiation and Growth due to Thermal Fatigue	Large-bore Stainless Steel Piping	▪ New Fatigue Monitoring Program for Class 1 piping ▪ ISI Program ▪ Technical Specification surveillance procedures
4.3.2	Crack Initiation and Growth due to IGSCC	Large-bore Stainless Steel Piping Small-bore Stainless Steel Piping and Valve Bodies Pump Casings (2B31-C001A Only) Large-bore Valve Bodies (1B31-F031A Only)	▪ Water Chemistry Procedures including HWC ▪ ISI Program (Specify that 2B31-C001A & 1B31-F031A be inspected) ▪ Technical Specification surveillance procedures
4.3.3	Crack Initiation and Growth due to Other Causes	Small-bore Stainless Steel Piping	▪ ISI Program ▪ Technical Specification surveillance procedures
4.3.4	Loss of Material due to Crevice Corrosion or Pitting Corrosion	Small-bore Stainless Steel Piping	▪ Water Chemistry Procedures ▪ Technical Specification surveillance procedures
4.3.5	Loss of Fracture Toughness due to Thermal Aging Embrittlement	Pump Casings Large-bore Valve Bodies	▪ ISI Program
4.3.6	Loss of Preload due to Stress Relaxation	Pressure Boundary Bolting	▪ ISI Program ▪ Technical Specification surveillance procedures

Note (a) The Maintenance Procedures, QA Program, and Operating Event Review Procedures apply to all aging effects and commodity groups.

4.3.1 Crack Initiation and Growth Due to Thermal Fatigue

The aging management program for crack initiation and growth due to thermal fatigue consists of the following activities:

- Fatigue Monitoring Program for Class 1 piping
- ISI Program
- Technical Specification Surveillance Procedures
- Maintenance Procedures
- QA Program
- Operating Event Review Procedures

Collectively, these activities provide the program to manage crack initiation and growth due to thermal fatigue for the RRS large-bore piping. See Section 5.1 for a discussion on thermal fatigue of RRS components. The attributes and features of this collection of activities that are important for managing this aging effect are described in the following paragraphs and in Table 8.

The Fatigue Monitoring Program (Section 6.1) will monitor the fatigue cumulative usage factor (CUF) for the bounding Class 1 piping locations 2 inches and larger. The formulas being developed for this program can be used to determine the fatigue CUF of the most critical piping location at any time or to project the 60-year fatigue CUF for that location.

The ISI program (Section 6.1) monitors the condition of RRS components, including the large-bore piping (Section 4.2.1). The ASME Code, Section XI contains multiple requirements for these components. They are subject to periodic volumetric and surface exams. They are also subject to a VT-2 inspection during the RRS pressure boundary testing. The ISI program specifies inspection frequencies and sample sizes for these examinations based on ASME Section XI requirements, regulations and plant commitments.

Technical Specification surveillance procedures (Section 6.1) provide guidance to monitor the RRS for system leakage. The plant QA program (Section 6.3) ensures that these activities are performed using procedures that have been reviewed and approved. The plant operating event review procedures (Section 6.3) provide guidance to assess plant and industry events. Corrective actions are initiated when appropriate. In some cases, maintenance procedures (Section 6.2) are used to implement corrective actions.

Demonstration

The TLAA evaluation in Section 7.2 shows that the design fatigue CUF, and the predicted CUF for the extended operating period is low for the RRS large-bore piping. The Fatigue Monitoring Program (Section 6.1) will monitor plant transients and track the fatigue CUF for the Class 1 piping.

The ISI Program, and Technical Specification surveillance procedures (Section 6.1) are linked to detection of cracking. Their scope includes the large-bore piping (Section 4.2.1).

Plant-specific and industry operating experience is reviewed as part of the ISI program and operating events review procedures (Section 6.3). The ongoing review of corrective actions and industry operating experience will provide the objective evidence to assure that the aging effects will be adequately managed.

The RRS is in good condition and performing its intended function. The above description links the aging management program to the detrimental aging effect. A review of plant operating history and inspections of the RRS demonstrate that the existing aging management activities credited have been, and will continue to be, effective in managing crack initiation and growth due to thermal fatigue (Section 5.1). In addition, a new aging management activity, as described in Section 6.1, will be established to monitor the fatigue CUF of the large-bore Class 1 piping. Therefore, there is reasonable assurance that detrimental aging effects will be adequately managed and the intended functions of the RRS will be maintained consistent with the CLB in the extended operating period.

Table 8
Aging Management Program Assessment
Crack Initiation and Growth due to Thermal Fatigue
in Stainless Steel Large-bore Piping

	Attributes	*Aging Management Program/Procedure*
1	Scope of the program includes the specific Structure, component or commodity (SCC) for the identified aging effect.	The Fatigue monitoring program, ISI program, and Technical Specification surveillance procedures include the RRS commodity grouping subject to the detrimental aging effect.
2	Preventive actions to mitigate or prevent aging degradation.	• The Fatigue monitoring program mitigates crack initiation and growth due to thermal fatigue by monitoring the events which contribute to the fatigue CUF. • The ISI program includes: ▪ Surface and volumetric inspections of welds in piping ▪ Pressure testing and VT-2 inspections. • Technical Specifications require leakage detection.
3	Parameters monitored or inspected are linked to the degradation of the particular SCC intended function.	The parameters monitored or inspected (plant transients, flaws, cracking, and leakage) are linked to maintaining pressure boundary and/or structural integrity, which ensures that RRS can perform its intended function.
4	The method of detection of the aging effects is described and performed in a timely manner.	The ISI program and Technical Specifications establish the methods of detection and the frequency of inspection, testing and surveillance based on ASME Section XI, regulations and plant commitments. The Fatigue monitoring program will specify the method of detection and will be performed at least once a year.
5	Monitoring and trending for timely corrective actions.	The ISI program provides for monitoring and trending. The Technical Specifications provide for monitoring. The Fatigue monitoring program will monitor and trend the events that can impact CUF.

	Attributes	*Aging Management Program/Procedure*
6	Acceptance criteria are included.	The ISI program, and Technical Specifications include acceptance criteria. The Fatigue monitoring program will include an acceptance criteria of CUF < 1.0.
7	Corrective actions, including root cause determination and prevention of recurrence, are included.	The ISI program, and Technical Specifications specify corrective actions. The Fatigue monitoring program will be governed by the plant QA program, which ensures corrective actions will be accomplished, including root cause determination and actions to prevent recurrence. The Fatigue Monitoring Program will also contain guidance that corrective actions can include revised calculations, flaw (crack) growth evaluations, increased ISI inspections, or replacement. Maintenance procedures may be used to perform corrective actions.
8	Confirmation process is included.	The ISI program, and Technical Specifications require reinspection following corrective actions. The plant QA program assures that corrective and preventive actions are accomplished and adequate.
9	Administrative controls should provide a formal review and approval process.	The plant QA program provides for the control of plant procedures and records associated with ISI, fatigue monitoring, and surveillance testing and inspections. These controls include a formal review and approval process.
10	Operating experience of the aging management program, including past corrective actions resulting in program enhancements or additional programs, are considered	The Fatigue monitoring program will be a new program so there is no operating experience for this program at this time. Plant-specific and industry operating experience is reviewed as part of the ISI program and Operating Event Report Review procedures.
11	Aging management programs and/or procedures are established by regulation and are subject to regulatory oversight.	The ISI program and Technical Specification surveillances are required by regulation and have been evaluated by the NRC, industry, and site organizations. The Fatigue monitoring program will be a new program at Plant Hatch. A similar program for the Hatch Reactor Pressure Vessel (RPV) is described in Section 4.2 of the Unit 1 FSAR and Section 5.4 of the Unit 2 FSAR. The RPV fatigue monitoring program has been evaluated by the NRC, industry, and site organizations.

4.3.2 Crack Initiation and Growth Due to IGSCC

The aging management program for crack initiation and growth due to IGSCC consists of the following activities:

- Water Chemistry Procedures including HWC
- ISI Program
- Technical Specification Surveillance Procedures
- Maintenance Procedures
- QA Program
- Operating Event Review Procedures

Collectively, these activities provide the program to manage crack initiation and growth due to IGSCC for the susceptible RRS commodities. See Section 5.1 for a discussion on IGSCC of RRS components. The attributes and features of this collection of activities that are important for managing this aging effect are described in the following paragraphs and in Table 9.

The cracking of stainless steel weldments due to IGSCC has been a significant issue for the boiling water reactor (BWR) primary coolant pressure boundary (PCPB) components. The technical review of this issue led to the development of procedures for repair, the use of more IGSCC resistant materials, augmented inspection programs for welds, and changes to, and monitoring of reactor coolant chemistry. Another major development, which can be used to investigate IGSCC, was the flaw detection analyses techniques. The ASME has played a major role on this issue and the current methods are documented in ASME, Section XI (Article IWA-3000, Mandatory Appendix III and Non-Mandatory Appendix A).

Cracking due to IGSCC has been the only significant aging effect actually experienced by the RRS components at Plant Hatch. Weld overlays (Section 6.2) were applied over identified cracks in the Unit 1 piping. The Unit 2 large-bore piping was replaced. The stresses in the RRS large-bore piping (Section 4.2.1) have been reduced by a number of design and installation practices including induction heating stress improvement (IHSI) and mechanical stress improvement process (MSIP) (Section 6.2). Most of the RRS components are now made from IGSCC resistant materials. One pump casing, 2B31-C001A, and one valve body, 1B31-F031A, require aging management for IGSCC because their material specifications are not within the boundaries of Figure 4 in ASTM 756, 1982 (Ref. 7).

The water chemistry procedures, including hydrogen water chemistry (HWC), provide guidelines to control the impurities in the reactor coolant to ensure that the RRS components are not subjected to a corrosive environment. See Section 6.2 for more details on the water chemistry procedures and HWC.

The ISI program (Section 6.1) monitors the condition of all the RRS components susceptible to IGSCC. NUREG-0313 (Ref. 4), Generic Letter 88-01(Ref. 9), and the ASME Code, Section XI contain multiple requirements for these components. Except for

the small-bore piping, these commodities are subject to periodic volumetric and surface exams. All these commodities are subject to a VT-2 inspection during the RRS pressure boundary testing. If the pump or valve is disassembled for maintenance, the pump casing or valve body is subject to a VT-3 inspection. The ISI program specifies inspection frequencies and sample sizes for these examinations, based on the ASME Code, regulations, and plant commitments.

As described above, pump casing 2B31-C001A and valve body 1B31-F031A are more susceptible to IGSCC than the other pump casings and valve bodies. Therefore, the ISI program at Hatch will be enhanced to ensure that these locations are inspected. ASME Section XI, Category B-J requires inspection of 25 percent of the Class 1 piping welds over each 10-year Interval. The ISI program at Hatch will specify that at least one of the welds to these two components be inspected each interval during the extended operating period. Category B-L-2 and Category B-M-2 require only one pump casing and one valve body be inspected if more than one is disassembled during the interval. The Hatch ISI program will specify that each of these two components will be inspected each interval, during the extended operating period, if they are disassembled, even if another similar component has already been inspected.

Technical Specification surveillance procedures (Section 6.1) provide guidance to monitor the RRS for system leakage and water chemistry. The plant QA program (Section 6.3) ensures that these activities are performed using procedures that have been reviewed and approved. The plant operating event review procedures (Section 6.3) provide guidance to assess plant and industry events. Corrective actions are initiated when appropriate. In some cases, maintenance procedures (Section 6.2) are used to implement corrective actions.

Demonstration

Most RRS components are made of IGSCC resistant materials. Residual stresses in the large-bore piping welds have been minimized by IHSI and/or MSIP (section 6.2). Technical Specification surveillance procedures (Section 6.1) and the water chemistry procedures (Section 6.2) prevent a corrosive environment. The combination of these activities mitigates the possibility of cracking due to IGSCC (Section 5.1) for all of the RRS commodities. The use of HWC (Section 6.2) further mitigates the possibility of cracking due to IGSCC for the large-bore piping, valve bodies and pump casings. The three conditions that are needed for cracking due to IGSCC to occur are a susceptible material, an applied stress, and a corrosive environment. The material for most of the RRS commodities is not susceptible. The corrosive environment has been mitigated for all of the RRS commodities. All three conditions are being mitigated for the large-bore piping.

The ISI program (Section 6.1), and the Technical Specification surveillance procedures are linked to detection of cracking. Their scope includes the large-bore RRS piping (Section 4.2.1), the small-bore RRS piping (Section 4.2.2), the RRS pump casings (Section 4.2.3), and the large-bore RRS valve bodies (Section 4.2.4).

Plant-specific and industry operating experience is reviewed as part of the ISI program and operating event review procedures (Section 6.3). The ongoing review of corrective actions and industry operating experience will provide the objective evidence to assure that the aging effects will be adequately managed.

The RRS is in good condition and performing its intended function. Most of the RRS components are made from IGSCC resistant materials. The above description links the aging management program to the detrimental aging effect. A review of plant operating history and inspections of the RRS demonstrate that the existing aging management activities credited have been, and should continue to be, effective in managing crack initiation and growth due to IGSCC. Crack initiation and growth has been identified, monitored, and corrected when required. Therefore, there is reasonable assurance that this detrimental aging effect will be adequately managed and the intended functions of the RRS will be maintained consistent with the CLB in the extended operating period.

Table 9
Aging Management Program Assessment
Crack Initiation and Growth due to IGSCC
in Stainless Steel Piping, Valve Bodies, and Pump Casings

	Attributes	*Aging Management Program/Procedure*
1	Scope of the program includes the specific Structure, component or commodity (SCC) for the identified aging effect.	The ISI program, Technical Specification surveillance procedures and water chemistry procedures include the RRS commodity groupings subject to this detrimental aging effect. The ISI Program includes augmented inspections required by regulation or plant commitments.
2	Preventive actions to mitigate or prevent aging degradation.	• Corrosion resistant materials for all RRS commodities; IGSCC resistant materials and IHSI for large-bore piping • Process environment is controlled by water chemistry procedures and HWC. • The ISI program includes: ▪ surface and volumetric inspections of welds in piping and valve bodies > 4" in diameter and pump casings ▪ pressure testing and VT-2 inspection ▪ VT-3 inspection of pump casing and valve body if pump or valve is disassembled for maintenance. • Technical Specifications require leakage detection and water chemistry limits.
3	Parameters monitored or inspected are linked to the degradation of the particular SCC intended function.	The parameters monitored or inspected (cracking, flaws, leakage and water chemistry) are linked to maintaining pressure boundary and/or structural integrity, which ensures that RRS can perform its intended function.
4	The method of detection of the aging effects is described and performed in a timely manner.	The ISI program and Technical Specifications establish the methods of detection and the frequency of inspection, testing and surveillance based on ASME Section XI, regulations and plant commitments. Water chemistry is monitored daily and methods of detection are specified.
5	Monitoring and trending for timely corrective actions.	The ISI program and the water chemistry procedures provide for monitoring and trending. The Technical Specifications provide for monitoring.

	Attributes	*Aging Management Program/Procedure*
6	Acceptance criteria are included.	The ISI program, Technical Specifications and the water chemistry procedures all include acceptance criteria.
7	Corrective actions, including root cause determination and prevention of recurrence, are included.	The ISI program, and Technical Specifications, and the water chemistry procedures specify corrective actions. The plant QA program ensures corrective actions will be accomplished, including root cause determination and actions to prevent recurrence.
8	Confirmation process is included.	The ISI program, and Technical Specifications require reinspection following corrective actions. The plant QA program assures that corrective and preventive actions are accomplished and adequate.
9	Administrative controls should provide a formal review and approval process.	The plant QA program provides for the control of plant procedures and records associated with ISI, water chemistry, and surveillance testing and inspections. These controls include a formal review and approval process.
10	Operating experience of the aging management program, including past corrective actions resulting in program enhancements or additional programs, are considered	Plant-specific and industry operating experience is reviewed as part of the ISI program and Operating Event Report Review procedures.
11	Aging management programs and/or procedures are established by regulation and are subject to regulatory oversight.	The ISI program and Technical Specification surveillances are required by regulation. The water chemistry procedures implement industry recommendations. All of these programs have been evaluated by the NRC, industry, and site organizations.

4.3.3 Crack Initiation and Growth Due to Other Causes

The aging management program for crack initiation and growth due to other causes consists of the following activities:

- ISI Program
- Technical Specification Surveillance Procedures
- Maintenance Procedures
- QA Program
- Operating Event Review Procedures

Collectively, these activities provide the program to manage crack initiation and growth due to other causes for the small-bore piping. See Section 5.1 for a discussion on other causes of crack initiation and growth in small-bore piping (Section 4.2.2). The attributes and features of this collection of activities that are important for managing this aging effect are described in the following paragraphs and in Table 10.

Maintenance procedures (Section 6.2) provide for monitoring and trending vibration on major pumps and motors. Identifying excessive vibration and correcting it can prevent vibrational fatigue.

Operating event review procedures (Section 6.3) will also identify concerns about other causes of cracking and appropriate actions will be taken.

Under the ISI program (Section 6.1) the small-bore piping is subject to a VT-2 inspection during the RRS pressure boundary testing per the requirements of Category B-P of ASME Section XI. Volumetric and surface examinations of small-bore piping under 2 ½ inches is not effective.

Technical Specification surveillance procedures (Section 6.1) provide guidance to monitor the RRS for system leakage. Very small leak rates are detectable. If there is pressure boundary leakage, per Technical Specification 3.4.4.C, the unit is shutdown. The leak rate from RRS small-bore piping cannot exceed the system makeup capacity and any leakage is contained and processed by the radwaste system. The plant QA program (Section 6.3) ensures that these activities are performed using procedures that have been reviewed and approved. The plant operating event review procedures (Section 6.3) provide guidance to assess plant and industry events. Corrective actions are initiated when appropriate.

Demonstration

Preventive actions to mitigate this aging effect are accomplished by design coupled with the maintenance procedures (Section 6.2) and the operating event review procedures.

The ISI program, and Technical Specification surveillance procedures (Section 6.1) are linked to detection of cracking. Their scope includes the small-bore RRS piping (Section 4.2.2).

There has been one event at Plant Hatch involving the RRS small-bore piping. This event occurred in 1987 at the socket weld for a line installed in 1984. There has been no recurrence. Plant-specific and industry operating experience is reviewed as part of the ISI program and operating event review procedures (Section 6.3). The ongoing review of corrective actions and industry operating experience will provide the objective evidence to assure that the aging effects will be adequately managed.

The RRS is in good condition and performing its intended function. The above description links the aging management program to the detrimental aging effect. A review of plant operating history and inspections of the RRS demonstrate that the existing aging management activities credited have been, and should continue to be, effective in managing crack initiation and growth due to other causes (Section 5.1). Crack initiation and growth in small-bore stainless steel piping has been identified and corrected without loss of intended function. Therefore, there is reasonable assurance that this detrimental aging effect will be adequately managed and the intended functions of the RRS will be maintained consistent with the CLB in the extended operating period.

Table 10
Aging Management Program Assessment
Crack Initiation and Growth Due to Other Causes
in Small-bore Stainless Steel Piping

	Attributes	*Aging Management Program/Procedure*
1	Scope of the program includes the specific Structure, component or commodity (SCC) for the identified aging effect.	The ISI program, Technical Specification surveillance procedures and maintenance procedures includes the RRS commodity grouping subject to this detrimental aging effect.
2	Preventive actions to mitigate or prevent aging degradation.	• Maintenance procedures monitor vibration of pumps & motors. • ISI program includes pressure testing and VT-2 inspection. • Technical Specifications require leakage detection.
3	Parameters monitored or inspected are linked to the degradation of the particular SCC intended function.	The parameters monitored or inspected (leakage and vibration) are linked to maintaining pressure boundary and/or structural integrity, which ensures that RRS can perform its intended function.
4	The method of detection of the aging effects is described and performed in a timely manner.	The ISI program and Technical Specifications establish the methods of detection and the frequency of inspection, testing and surveillance based on ASME Section XI, regulations and plant commitments. The maintenance procedures specify frequency and methods of detection.
5	Monitoring and trending for timely corrective actions.	The ISI program and maintenance procedures provide for monitoring and trending. The Technical Specifications provide for monitoring.
6	Acceptance criteria are included.	The ISI program, Technical Specifications and the maintenance procedures all include acceptance criteria.
7	Corrective actions, including root cause determination and prevention of recurrence, are included.	The ISI program, maintenance procedures, and Technical Specifications specify corrective actions. The plant QA program ensures corrective actions will be accomplished, including root cause determination and actions to prevent recurrence.
8	Confirmation process is included.	The ISI program, and Technical Specifications require reinspection following corrective actions. The plant QA program assures that corrective and preventive actions are accomplished and adequate.
9	Administrative controls should provide a formal review and approval process.	The plant QA program provides for the control of plant procedures and records associated with ISI, maintenance procedures, and surveillance testing and inspections. These controls include a formal review and approval process.
10	Operating experience of the aging management program, including past corrective actions resulting in program enhancements or additional programs, are considered	Plant-specific and industry operating experience is reviewed as part of the ISI program and Operating Event Report Review procedures.
11	Aging management programs and/or procedures are established by regulation and are subject to regulatory oversight.	The ISI program and Technical Specification surveillances are required by regulation. Maintenance procedures implement industry guidance. These programs have been evaluated by the NRC, industry, and site organizations.

4.3.4 Loss of Material Due to Crevice Corrosion or Pitting Corrosion

The aging management program for loss of material due to crevice corrosion or pitting corrosion consists of the following activities:

- Water Chemistry Procedures
- Technical Specification Surveillance Procedures
- Maintenance Procedures
- QA Program
- Operating Event Review Procedures

Collectively, these activities provide the program to manage loss of material due to crevice corrosion or pitting corrosion for the small-bore piping and valves. See Section 5.2 for a discussion on crevice corrosion and pitting corrosion of RRS components. The attributes and features of this collection of activities that are important for managing this aging effect are described in the following paragraphs and in Table 11.

The water chemistry procedures provide guidelines to control the impurities in the reactor coolant to ensure that the RRS components are not subjected to a corrosive environment. See Section 6.2 for more details on the water chemistry procedures.

Technical Specification surveillance procedures (Section 6.1) provide guidance to monitor the RRS water chemistry. The plant QA program (Section 6.3) ensures that these activities are performed using procedures that have been reviewed and approved. The plant operating event review procedures (Section 6.3) provide guidance to assess plant and industry events. Corrective actions are initiated when appropriate. In some cases, maintenance procedures (Section 6.2) are used to implement corrective actions.

Demonstration

The water chemistry procedures (Section 6.1) prevent loss of material due to crevice corrosion or pitting corrosion (Section 5.2) for the small-bore stainless steel piping and valves.

The Technical Specification surveillance procedures (Section 6.1) are linked to mitigating corrosion. Their scope includes the small-bore RRS piping (Section 4.2.2).

Plant-specific and industry operating experience is reviewed as part of the operating event review procedures (Section 6.3). The ongoing review of corrective actions and industry operating experience will provide the objective evidence to assure that the aging effects will be adequately managed.

The RRS is in good condition and performing its intended function. The above description links the aging management program to the detrimental aging effect. A review of plant operating history and inspections of the RRS demonstrate that the existing aging management activities credited have been, and should continue to be, effective in managing

loss of material due to crevice corrosion or pitting corrosion. This aging effect has not been found in these components. Therefore, there is reasonable assurance that this detrimental aging effect will be adequately managed and the intended functions of the RRS will be maintained consistent with the CLB in the extended operating period.

Table 11
Aging Management Program Assessment
Loss of Material due to Crevice Corrosion or Pitting Corrosion in Small-bore Stainless Steel Piping

	Attributes	*Aging Management Program/Procedure*
1	Scope of the program includes the specific Structure, component or commodity (SCC) for the identified aging effect.	The Technical Specification surveillance procedures and water chemistry procedures include the RRS commodity grouping subject to this detrimental aging effect.
2	Preventive actions to mitigate or prevent aging degradation.	• Corrosion resistant materials for all RRS commodities • Process environment is controlled by water chemistry procedures. • Technical Specifications require water chemistry limits.
3	Parameters monitored or inspected are linked to the degradation of the particular SCC intended function.	The parameters monitored (water chemistry) are linked to maintaining pressure boundary and/or structural integrity, which ensures that RRS can perform its intended function.
4	The method of detection of the aging effects is described and performed in a timely manner.	The Technical Specifications establish the methods of detection and the frequency of surveillance based on regulations. Water chemistry is monitored daily and methods of detection are specified.
5	Monitoring and trending for timely corrective actions.	The water chemistry procedures provide for monitoring and trending. The Technical Specifications provide for monitoring.
6	Acceptance criteria are included.	The Technical Specifications and the water chemistry procedures include acceptance criteria.
7	Corrective actions, including root cause determination and prevention of recurrence, are included.	The Technical Specifications and the water chemistry procedures specify corrective actions. The plant QA program ensures corrective actions will be accomplished, including root cause determination and actions to prevent recurrence.
8	Confirmation process is included.	The Technical Specifications require reinspection following corrective actions. The plant QA program assures that corrective and preventive actions are accomplished and adequate.
9	Administrative controls should provide a formal review and approval process.	The plant QA program provides for the control of plant procedures and records associated with water chemistry, and surveillance testing. These controls include a formal review and approval process.
10	Operating experience of the aging management program, including past corrective actions resulting in program enhancements or additional programs, are considered	Plant-specific and industry operating experience is reviewed as part of the Operating Event Report Review Procedures.
11	Aging management programs and/or procedures are established by regulation and are subject to regulatory oversight.	The Technical Specification surveillances are required by regulation. The water chemistry procedures implement industry recommendations. These programs have been evaluated by the NRC, industry, and site organizations.

4.3.5 Loss of Fracture Toughness Due to Thermal Aging Embrittlement

The aging management program for loss of fracture toughness due to thermal aging embrittlement consists of the following activities:

- ISI Program
- Maintenance Procedures
- QA Program
- Operating Event Review Procedures

Collectively, these activities provide the program to manage loss of fracture toughness due to thermal aging embrittlement for the susceptible RRS commodities. See Section 5.3 for a discussion on thermal aging embrittlement of RRS components. The attributes and features of this collection of activities that are important for managing this aging effect are described in the following paragraphs and in Table 12.

Loss of fracture toughness due to thermal aging embrittlement is discovered during plant operations by the existence of cracks. The ISI program (Section 6.1) monitors the condition of all the RRS components susceptible to loss of fracture toughness. The ASME Code, Section XI contains multiple requirements for these components. These commodities are subject to periodic volumetric and surface exams. If a pump or valve is disassembled for maintenance, the pump casing or valve body is subject to a VT-3 inspection. Relevant indications found during the VT-3 examination are subject to supplemental examinations, in order to characterize the indications further, and potential engineering evaluations. If flaws detected and sized by those supplemental examinations exceed acceptance criteria, the flaw evaluation procedures specified in IWB-3640 will be used. The NRC safety evaluation for BAW-2243A (Ref. 18) approved these procedures specifically for CASS valve bodies; however, they may be applied to other CASS components, such as the pump casings, as discussed in EPRI-TR-106092 (Ref. 8). The ASME Code specifies inspection frequencies, sample sizes, etc. for these examinations.

The plant QA program (Section 6.3) ensures that these activities are performed using procedures that have been reviewed and approved. The plant operating event review procedures (Section 6.3) provide guidance to assess plant and industry events. Corrective actions are initiated when appropriate. In some cases, maintenance procedures (Section 6.2) are used to implement corrective actions.

Demonstration

The scope of the ISI program (Section 6.1) includes the RRS pump casings (Section 4.2.3) and the large-bore RRS valve bodies (Section 4.2.4).

There has been no experience of this aging effect at Plant Hatch. Plant-specific and industry operating experience is reviewed as part of the ISI program and operating event review procedures (Section 6.3). The ongoing review of corrective actions and industry operating experience will provide the objective evidence to assure that the aging effects will be adequately managed.

The RRS is in good condition and performing its intended function. The above description links the aging management program to the detrimental aging effect. A review of plant operating history and inspections of the RRS demonstrate that the existing aging management activities credited have been, and should continue to be, effective in managing loss of fracture toughness due to thermal aging embrittlement (Section 5.2). Therefore, there is reasonable assurance that this detrimental aging effect will be adequately managed and the intended functions of the RRS will be maintained consistent with the CLB in the extended operating period.

Table 12
Aging Management Program Assessment
Loss of Fracture Toughness due to Thermal Aging Embrittlement
of Stainless Steel Large-bore Valve Bodies and Pump Casings

	Attributes	*Aging Management Program/Procedure*
1	Scope of the program includes the specific Structure, component or commodity (SCC) for the identified aging effect.	The ISI program includes the RRS commodity groupings subject to this detrimental aging effect.
2	Preventive actions to mitigate or prevent aging degradation.	The ISI program includes: • Surface and volumetric inspections of welds in valve bodies and pump casings • VT-3 inspection of valve bodies and pump casing • Flaw evaluation per IWB-3640
3	Parameters monitored or inspected are linked to the degradation of the particular SCC intended function.	The parameters inspected (cracking and flaws) are linked to maintaining pressure boundary and/or structural integrity, which ensures that RRS can perform its intended function.
4	The method of detection of the aging effects is described and performed in a timely manner.	The ISI Program establishes the methods of detection and the frequency of inspection based on ASME Section XI, regulations and plant commitments.
5	Monitoring and trending for timely corrective actions.	The ISI Program provides for monitoring and trending.
6	Acceptance criteria are included.	The ISI Program includes acceptance criteria.
7	Corrective actions, including root cause determination and prevention of recurrence, are included.	The ISI Program specifies corrective actions. The plant QA program ensures corrective action will be accomplished, including root cause determination and actions to prevent recurrence.
8	Confirmation process is included.	The ISI Program requires reinspection following corrective actions. The plant QA program assures that corrective and preventive actions are accomplished and adequate.
9	Administrative controls should provide a formal review and approval process.	The plant QA program provides for the control of plant procedures and records associated with ISI inspections. These controls include a formal review and approval process.
10	Operating experience of the aging management program, including past corrective actions resulting in program enhancements or additional programs, are considered	Plant-specific and industry operating experience is reviewed as part of the ISI program and Operating Event Report Review Procedures.
11	Aging management programs and/or procedures are established by regulation and are subject to regulatory oversight.	The ISI program is required by regulation. This program has been evaluated by the NRC, industry, and site organizations.

4.3.6 Loss of Preload Due to Stress Relaxation

The aging management program for loss of preload due to stress relaxation consists of the following activities:

- ISI Program
- Technical Specification Surveillance Procedures
- Maintenance Procedures
- QA Program
- Operating Event Review Procedures

Collectively, these activities provide the program to manage loss of preload due to stress relaxation for the pressure boundary bolting. See Section 5.4 for a discussion on stress relaxation of pressure boundary bolting. The attributes and features of this collection of activities that are important for managing this aging effect are described in the following paragraphs and Table 13.

Maintenance procedures (Section 6.2) provide instructions to ensure proper preload is applied. This cannot prevent loss of preload, but it does mitigate the aging effect. If leakage is found, maintenance procedures would then be used for corrective actions.

Under the ISI program (Section 6.1) the pressure boundary bolting is subject to a VT-2 inspection during the RRS pressure boundary testing per the requirements of Category B-P of ASME Section XI. This inspection is performed near the end of outages to ensure that all unacceptable leakage is found and corrected prior to returning the unit to operation. A review of plant experience found that this inspection has previously found leakage attributed to loss of preload.

Technical Specification surveillance procedures (Section 6.1) provide guidance to monitor the RRS for system leakage. If there is pressure boundary leakage, per Technical Specification 3.4.4.C, the unit is shutdown. The plant QA program (Section 6.3) ensures that these activities are performed using procedures that have been reviewed and approved. The plant operating event review procedures (Section 6.3) provide guidance to assess plant and industry events. Corrective actions are initiated when appropriate.

Demonstration

Preventive actions to mitigate this aging effect are accomplished by proper torquing with the maintenance procedures (Section 6.2).

The ISI program, and Technical Specification surveillance procedures (Section 6.1) are linked to detection of leakage. Their scope includes the pressure boundary bolting (Section 4.2.6).

The RRS is in good condition and performing its intended function. The above description links the aging management program to the detrimental aging effect. A review of plant

operating history and inspections of the RRS demonstrate that the existing aging management activities credited have been, and should continue to be, effective in managing loss of preload due to stress relaxation (Section 5.4). Loss of preload has been identified and corrected without loss of the system's intended function. Therefore, there is reasonable assurance that this detrimental aging effect will be adequately managed and the intended functions of the RRS will be maintained consistent with the CLB in the extended operating period.

Table 13
Aging Management Program Assessment
Loss of Preload due to Stress Relaxation of Pressure Boundary Bolting

	Attributes	*Aging Management Program/Procedure*
1	Scope of the program includes the specific Structure, component or commodity (SCC) for the identified aging effect.	The ISI program, Technical Specification surveillance procedures and maintenance procedures include the RRS commodity grouping subject to this detrimental aging effect.
2	Preventive actions to mitigate or prevent aging degradation.	• Maintenance procedures ensure that bolts are properly torqued. • The ISI program includes pressure testing with a VT-2 inspection. • Technical Specifications require leakage detection.
3	Parameters monitored or inspected are linked to the degradation of the particular SCC intended function.	The parameters monitored or inspected (torque and leakage) are linked to maintaining pressure boundary and/or structural integrity, which ensures that RRS can perform its intended function.
4	The method of detection of the aging effects is described and performed in a timely manner.	The ISI program and Technical Specifications establish the methods of detection and the frequency of inspection, testing and surveillance based on ASME Section XI, regulations and plant commitments.
5	Monitoring and trending for timely corrective actions.	The ISI program provides for monitoring and trending. The Technical Specifications provide for monitoring.
6	Acceptance criteria are included.	The ISI program, Technical Specifications and the maintenance procedures all include acceptance criteria.
7	Corrective actions, including root cause determination and prevention of recurrence, are included.	The ISI program and Technical Specifications specify corrective actions. The plant QA program ensures corrective actions will be accomplished, including root cause determination and actions to prevent recurrence. The maintenance procedures may be used to perform corrective actions.
8	Confirmation process is included.	The ISI program, and Technical Specifications require reinspection following corrective actions. The plant QA program assures that corrective and preventive actions are accomplished and adequate.
9	Administrative controls should provide a formal review and approval process.	The plant QA program provides for the control of plant procedures and records associated with ISI, maintenance procedures, and surveillance testing and inspections. These controls include a formal review and approval process.
10	Operating experience of the aging management program, including past corrective actions resulting in program enhancements or additional programs, are considered	Plant-specific and industry operating experience is reviewed as part of the ISI program and Operating Event Report Review procedures.
11	Aging management programs and/or procedures are established by regulation and are subject to regulatory oversight.	The ISI program and Technical Specification surveillances are required by regulation. Maintenance procedures implement industry guidance. These programs have been evaluated by the NRC, industry, and site organizations.

5.0 AGING EFFECTS

This Section provides a discussion of the various aging effects evaluated in Section 4.0 of this report. In most cases this discussion includes identification of the mechanisms that cause the effect, material/environment combinations that are particularly susceptible and particularly resistant to the mechanism, and identification of typical methods used in the industry to prevent, mitigate, and monitor the effect.

5.1 Cracking

Cracking in Stainless Steel can be caused by several mechanisms. The mechanisms that are plausible for the RRS are:

- Thermal Fatigue
- Stress Corrosion Cracking (IGSCC)
- Other Causes

Thermal Fatigue

Fatigue is a general term that describes the structural deterioration that can occur as the result of repeated stress/strain cycles caused by fluctuating loads or temperatures. After repeated cyclic loading, if sufficient localized microstructural damage has been accumulated, crack initiation can occur at the most highly affected locations. Subsequent cyclic loading and/or thermal stress can cause crack growth.

The presence of an oxidative environment, as the Hatch pressure boundary piping system was prior to using HWC (Section 6.2), can accelerate the fatigue crack initiation and propagation process. This is commonly referred to as environmentally assisted fatigue. The NRC questioned the adequacy of the ASME Code fatigue curves to account for this effect. However, testing performed by the industry (Ref. 11, 12, and 13) has shown that the combination of existing conservatisms is such that explicit treatment of reactor water environmental effects in fatigue design analysis is not considered necessary.

The Welding Research Council (Ref. 16) studied piping failures in domestic nuclear power plants through 1991. If failure incidents (major breaks or splits) are separated from less critical crack and leakage observation incidents, the Welding Research Council identified no failures for piping classified as ASME B&PV Code, Section III, Class I that were greater than or equal to 2 inches in diameter. There has been no cracking due to thermal fatigue on any of these components at Plant Hatch.

Cracking due to fatigue is a plausible aging effect for the Class 1 piping, valves bodies, and pump casings. At Plant Hatch, the design against fatigue cracking in the large-bore stainless steel piping (Section 4.2.1) is based on satisfaction of cumulative fatigue usage factor limits using the fatigue curves from ASME B&PV Codes. The Unit 1 RRS piping fatigue limits are based on ASME Section III, 1983 Edition with Addenda to and

including Winter of 1984; and, the Unit 2 limits are based on 1980 Edition with addenda to and including Winter of 1981.

The 2 inch Class 1 small-bore piping is included in the design fatigue calculations performed for Class 1 large-bore stainless steel piping. Crack initiation and growth due to fatigue is a detrimental aging effect at Plant Hatch for the large-bore stainless steel piping. The aging management program for this aging effect is described in Section 4.3.1. Fatigue of Class 1 large-bore stainless steel piping is a TLAA and is discussed in Section 7.2.

At Plant Hatch, the design against fatigue cracking for Class 1 small-bore stainless steel piping and valve bodies (Section 4.2.2) 1 inch in diameter and smaller is based on the ASME Section III, Class 1, 1971 Edition cyclic load evaluations. The inherent flexibility of the small-bore piping reduces the loading due to thermal cycles. These components, and Class 2 and 3 components, are designed for at least 7,000 full-temperature cycles. No aging management program is needed to manage fatigue of these components because the RRS system will not exceed 7,000 cycles during 60 years.

At Plant Hatch, the RRS Pump casing (Section 4.2.3) design considered the potential for thermal fatigue cycling to occur. Actual fatigue usage values have not been determined for these components at Hatch. Industry evaluations (Ref. 5) have shown that typically the recirculation pump casing fatigue usage is very low. These evaluations determined that the fatigue usage factors are insignificant in accordance with the code criteria used in the design of these pumps. The pump casings at Plant Hatch have similar design features to those used in the industry study, including wall thickness, material and cyclic loading. These results demonstrate that the design of the Plant Hatch pumps will remain valid, with respect to cumulative fatigue usage, for the period of extended operation. No further review of this aging effect is required for the extended operating period.

Per GE SIL 459, Supplement 1 (Ref. 14) thermal fatigue cracking of pump covers due to localized thermal effects (mixing of colder seal purge flow with reactor coolant) has been observed in several Byron Jackson 1st and 2nd generation recirculation pumps during ISI inspections. One instance of this was believed to result in pressure boundary leakage, but testing failed to confirm this. The pump in this case was altered to allow leakage to be monitored, collected, and measured. No detectable leakage was identified. Plant Hatch has Byron Jackson 2nd generation pumps, but the covers will be replaced with the new Byron Jackson 4th generation design. The parts have been purchased and implementation is currently planned for 2001 on Unit 2 and 2002 on Unit 1. The new design features a redesigned pump shaft and cover , along with a new heater and cooler. Based on factory testing and operation at two power plants, this design eliminates the formation of cracks. Dye penetrant inspections on pumps featuring the 4th generation design revealed no cracks after two full years of operation. Since the pump covers will be replaced, no aging management program is required.

At Plant Hatch, the design of RRS large-bore valve bodies (Section 4.2.4) considered the potential for thermal fatigue cycling to occur. Actual fatigue usage values have not been

determined for these components at Hatch. Industry evaluations (Ref. 5) have shown that typically the fatigue usage is less than 0.25 for 40 years, which translates to less than 0.4 for 60 years. Plant Hatch large-bore valve bodies have similar design features to those used in the industry study, including wall thickness, material and cyclic loading. The BWR Primary Coolant Pressure Boundary License Renewal Industry Report (Ref. 5) states, "For fatigue to be resolved, the component must have no experience of flaws induced by fatigue and either typical evaluations of the component with similar design and operation or plant-specific evaluations show that the fatigue usage factor is less than 0.4 for SS or 0.25 for CS for at least 40 years." Therefore, it is reasonable to conclude that components with a life of plant projected fatigue usage less than 0.4 do not need to be included in an aging management program. The design of the Plant Hatch large-bore valve bodies will remain valid, with respect to cumulative fatigue usage, for the period of extended operation. No further review of this aging effect is required for the extended operating period.

Stress Corrosion Cracking

Stress corrosion cracking occurs through the combination of high stress, a corrosive environment, and a susceptible material. Stress corrosion cracking can be categorized as:

- Intergranular Stress Corrosion Cracking (IGSCC)
- Transgranular Stress Corrosion Cracking (TGSCC) *
- Irradiation Assisted Stress Corrosion Cracking (IASCC) *
  - * Not discussed in this report

Intergranular stress corrosion cracking (IGSCC)

IGSCC refers to cracking which progresses along the microstructural grain boundaries. Three conditions must be present simultaneously to produce IGSCC: a susceptible material, a tensile stress (applied and/or residual), and a corrosive environment. The elimination of any one of these three factors or the reduction of one of these factors below threshold levels significantly reduces the potential for IGSCC.

IGSCC is typically associated with materials containing excessive grain boundary precipitation or impurity segregation. Although IGSCC usually occurs in fluid mediums with high dissolved oxygen (> 100 ppb), it can also occur in a low oxygen environment. Preferential grain boundary precipitation of carbides in austenitic stainless steels and nickel-base alloys leads to a localized depletion of chromium in the vicinity of the grain boundary. This process is known as sensitization and renders the material susceptible to IGSCC.

Intergranular attack (IGA), also known as intergranular corrosion, is similar in some respects to IGSCC; however, it is distinguished from IGSCC in that stress is not necessary for it to proceed. Generally, materials and conditions that are susceptible to IGSCC will also be susceptible to IGA. For purposes of this report, IGSCC will include IGA.

Since the 1960s, the susceptibility of BWR components to IGSCC has been known. Significant work, research, and testing have been done to understand the mechanisms and develop water chemistries and alternatives for the mitigation of IGSCC of reactor internals. The latest guidelines and technical bases are found in the EPRI BWR Water Chemistry Guidelines - 1996 Revision (Ref. 19). This document strengthens the recommendation for HWC (Section 6.2), provides methodology for plant specific water chemistry program development, and discusses the side effects of HWC.

Conductivity is a measure of impurities in the water. Studies have shown that certain impurities such as sulfate and chloride accelerate initiation of IGSCC and promote high crack growth rates. BWR plant measured conductivities have improved significantly over the years. Even the purest water will not provide immunity to IGSCC in the BWR, but good water will delay the initiation.

The Unit 1 large-bore piping (Section 4.2.1) is made of stainless steel and was modified by applying IHSI and/or MSIP to each circumferential weld joint (Section 6.2). In addition, IGSCC-resistant weld overlays (Section 6.2) were applied to the weldments with crack indications. There are 52 Category E welds at Plant Hatch, Unit 1. Category E welds are those with known flaws that have been reinforced by an acceptable weld overlay or have been mitigated by an IHSI treatment with subsequent qualified examination to verify the extent of cracking. Inspections of the original welds and weld overlays subsequent to application of the overlays have determined that no new or existing cracks have propagated into the weld overlay. Therefore, there has been no significant cracking found in this piping. The IHSI process was applied to the majority of the remaining welds within the non-isolable portion of the Unit 1 Reactor Coolant pressure boundary within the scope of the NUREG-0313 (Ref. 4). Hydrogen water chemistry (HWC) was also adopted to reduce the oxygen and peroxide content and thereby mitigate the corrosive environment (Section 6.2).

The Unit 2 large-bore piping was replaced with 316NG stainless steel, which is an IGSCC-resistant material. The welding material for the pipe weldments was limited to Type 308L except for dissimilar metal welds where Type 309L was used. Design, fabrication, and installation practices were used during the replacement to reduce the stress levels in the material. Applying IHSI and/or MSIP (Section 6.2) to each circumferential weld joint was one of these practices. Other practices included minimizing geometric discontinuities and establishing heat treatment, hot forming, and welding procedures that incorporated the results of industry research. HWC (Section 6.2) was also adopted to reduce the oxygen and peroxide content and thereby mitigate the corrosive environment. There has been no cracking due to IGSCC, that exceeded acceptance criteria, found in this piping since its replacement. Therefore, there has been no significant cracking in this piping.

The small-bore piping (Section 4.2.2) is constructed from stainless steel that is resistant but not immune to crack initiation and growth due to IGSCC.

ASTM 756, 1982 (Ref. 7) provides a reasonable basis for the determination of the susceptibility of CASS to IGSCC as a function of carbon and ferrite levels. Cast materials with low carbon content and greater than 5 percent ferrite content are considered resistant to sensitization. Most large bore valve bodies (Section 4.2.3) and pump casings (Section 4.2.4) are made of CASS material that is within the boundaries of Figure 4 in ASTM 756. Therefore, crack initiation and growth due to IGSCC is not a detrimental aging effect for these components.

At Plant Hatch, there has been no experience of significant cracking induced by IGSCC on either unit since these repairs and improvements were made. In all cases, at least two, and in some cases all three, of the conditions required to cause IGSCC have been successfully mitigated. The aging management program described in Section 4.3.2 will be continued during the extended operating period to manage this aging effect for the RRS components.

Other Causes

The principal aging effect for small-bore piping is potential cracking at the welded joint or in the base metal at or near weld heat-affected zones. Such cracking may be caused by growth of fabrication defects under normal service loads, or by initiation and growth of service-induced flaws caused by one or more aging mechanisms, such as thermal or high cycle fatigue. Since cracking due to thermal fatigue and IGSCC have already been discussed, this section pertains to cracking due to any other mechanism.

One such mechanism is high cycle fatigue. High cycle fatigue in small diameter piping components has been observed but design review and necessary modifications have essentially eliminated concerns (Ref. 17). Most of these failures have been attributed to design or installation problems. As such, these failures are normally detected early in plant life and action is taken to correct them.

At Plant Hatch, the small-bore piping (Section 4.2.2) design accounts for all known loads and stresses, including vibration. The larger the pipe, the less susceptible it is to vibrational (or high cycle) fatigue.

A review of Plant Hatch operating performance reveals a small number of small-bore piping failures. Most of these failures are in 1 inch or smaller pipe at socket welds. In most cases, the actual failure mechanism can not be conclusively determined due to weld joint damage. Therefore, cracking of small-bore stainless steel piping due to other causes will be treated as a detrimental aging effect. Cracking of small-bore stainless steel piping due to other causes is managed by the aging management program described in Section 4.3.3.

Operating event review procedures (Section 6.3) will identify small-bore cracking at other plants and permit plant specific actions to be taken to prevent similar events at Hatch, when it is determined that Hatch may be susceptible to the same concern.

Plant maintenance procedures (Section 6.2) provide for monitoring and trending vibration on major pumps and motors. Identifying excessive vibration and correcting it can prevent vibrational fatigue. When vibrational concerns are identified, the cause is determined and the design or installation is corrected. When a small-bore socket welded joint requires corrective action, whether this is due to a failure or because it has been identified as being susceptible to vibrational fatigue, it is repaired using a weld with a different configuration. There have been no instances of weld failure recurring following the specified weld repair at Plant Hatch.

Under the ISI program (Section 6.1) the small-bore piping is subject to a VT-2 inspection during the RRS pressure boundary testing per the requirements of Category B-P of ASME Section XI. Although volumetric inspection of small-bore piping welds is not effective and surface examination is not required for piping under 2 ½ inches, leakage detection requirements, coupled with the operating experience review procedures, maintenance procedures, and the plant QA program requirements for corrective actions, are adequate for 2 inch and smaller piping because of the low risk. Very small leaks can be detected, thus providing ample time to shutdown and repair an unisolable leak before the pipe breaks. The leak rate from RRS small-bore piping cannot exceed the makeup capacity and other plant systems ensure containment of any leakage. Because the maximum possible leak rate is low and multiple makeup sources exist, probabilistic risk assessment (PRA) analysis has shown this type event has a low contribution to core damage frequency.

5.2 Loss of Material

Aging mechanisms that can lead to loss of the material for the RRS Components are:

- Crevice corrosion
- Pitting corrosion

Crevice Corrosion

Crevice corrosion occurs in crevices or shielded areas that allow a corrosive environment to develop within the crevice. It requires stagnant conditions in the crevice and an oxygen content in the fluid above 100 ppb to initiate and perpetuate crevice corrosion. Although the oxygen content in crevices can differ significantly from the bulk fluid oxygen levels due to oxygen depletion, etc., a bulk fluid oxygen level to sustain the chemical reaction is necessary for the continued corrosion in the crevice.

Crevice corrosion is not expected to cause excessive degradation in crevice joints such as socket welds or flange joints in a properly controlled low impurity environment.

Stainless steel components in a treated water environment are not generally susceptible to crevice corrosion unless they are subject to stagnant or low flow conditions. The small-bore piping and valves are the only RRS components that are subject to low flow

conditions. Therefore, loss of material due to crevice corrosion is a detrimental aging effect for the small-bore piping and valves, but not for any other RRS components. This aging effect is managed at Plant Hatch by the aging management program described in Section 4.3.4.

Pitting Corrosion

Pitting corrosion is more common with passive materials such as wrought austenitic stainless steels and nickel-base alloy steels than with non-passive materials. All nuclear plant materials are susceptible to pitting corrosion under certain conditions. Alloys containing molybdenum (e.g., Type 316 or 316L, CF-3M, and CF-8M) are somewhat more resistant to pitting. Oxygen levels above 100 ppb in conjunction with impurities such as chloride, fluoride, sulfate or copper are required to initiate pitting in carbon steel, low-alloy steel, wrought austenitic stainless steel, CASS, nickel-base alloys, and cast iron. Stagnant or low flow conditions which enables impurities to adhere to the metal surface is also required for pitting corrosion to occur. Areas where sludge piles and/or crevices exist are particularly susceptible to pitting corrosion.

Where crevice corrosion occurs in crevices that may contain stagnant fluid even under system flowing conditions, pitting requires either low flow or stagnant conditions to sustain the corrosion reaction and to provide for the concentration of contaminants. Maintaining an adequate flow rate will minimize pitting corrosion by preventing impurities from adhering to the material surface. The low flow threshold for stainless steel and treated water is < 3 ft/sec. The small-bore piping and valves are the only RRS components that are subject to low flow conditions. Therefore, loss of material due to crevice corrosion is a detrimental aging effect for the small-bore piping and valves, but not for any other RRS components. This aging effect is managed at Plant Hatch by the aging management program described in Section 4.3.4.

5.3 Loss of Fracture Toughness

Aging mechanisms that can lead to loss of fracture toughness are:

- Thermal Aging Embrittlement
- Neutron Irradiation Embrittlement (Not discussed in this report)

Thermal Aging Embrittlement

Thermal aging embrittlement degrades the mechanical properties of material (strength, ductility, and toughness) as a result of prolonged exposure to high temperatures. Carbon, low-alloy, cast iron, wrought austenitic stainless steel, copper alloys and nickel-base alloys are not susceptible to thermal aging embrittlement when exposed to normal nuclear plant operating environments. However, CASS materials are susceptible to thermal embrittlement. The degree of susceptibility is dependent upon material composition and exposure time at high temperatures. Castings with high

ferrite and high molybdenum contents are more susceptible to thermal aging embrittlement than those with lower values.

Cast materials that are below the temperature-screening threshold of 482°F are not subject to significant reduction of fracture toughness for the period of extended operation. EPRI Report TR-106092 (Ref. 8) provides a methodology for determining if CASS components require aging management. Because the RRS pump casings (Section 4.2.3) and large-bore valve bodies (Section 4.2.4) are made from high-molybdenum, statically-cast material, loss of fracture toughness due to thermal aging embrittlement of these components is a detrimental aging effect that requires management at Plant Hatch by the aging management program described in Section 4.3.5.

5.4 Loss of Preload

Stress Relaxation

The pressure boundary bolting (Section 4.2.6) is susceptible to loss of preload due to stress relaxation. This aging effect only occurs under the conditions of constant strain where part of the elastic strain is replaced with plastic strain. The prestress in bolts or studs can relax with time at elevated temperatures. EPRI torquing procedures (Ref. 15) provide guidance in applying preload. Plant Hatch design requirements ensure that adequate preload is used for pressure boundary bolting. Maintenance procedures (Section 6.2) ensure this design preload is reapplied following maintenance. In the event that loose bolts are found, the maintenance procedures provide guidance from the EPRI torquing procedures for increasing the torque as needed. This aging effect is not considered a significant problem at Plant Hatch. However, a review of Plant Hatch pressure test results indicated several leaks in mechanical closures that may be due to loss of preload. Loss of preload can be minimized by ensuring that components are installed using applicable industry guidelines. However, simply applying good practices in the installation phase cannot prevent loss of preload. Therefore, loss of preload will be considered a detrimental aging effect at Plant Hatch. The aging management program for this aging effect is described in Section. 4.3.6.

6.0 AGING MANAGEMENT PROGRAMS

For this report, Aging Management Programs are divided into three categories. Monitoring Programs, Mitigating Programs, and Supporting Programs. This section will describe the programs in each of these categories.

6.1 Monitoring Programs

- Fatigue Monitoring Program
- Inservice Inspection Program (ISI)
- Technical Specification Surveillance Test Procedures

Fatigue Monitoring Program

This will be a new program at Plant Hatch. Equations are being developed to monitor the fatigue cumulative usage factor (CUF) for the locations that bound fatigue usage for the Class 1 piping 2 inches and larger. These equations are similar to the equations that have been used since 1985 at Plant Hatch to monitor fatigue CUF for the reactor pressure vessel. The existing program for the Hatch RPV is described in Section 4.2 of the Unit 1 FSAR and Section 5.4 of the Unit 2 FSAR.

The new program for Class 1 piping will periodically require that specified plant transients be totaled since the last time the fatigue usage was assessed. This will be done at least once a year. The formulas will then be used to calculate the increase in fatigue usage and establish the new fatigue CUF for each of these locations. The acceptance criteria will be a CUF less than 1.0. Based on the number of transients over the last 5 to 10 years, projections can be made for the fatigue CUF after 60 years of operation. For example, if 6 years is chosen, the applicable transients over the last 6 years would be totaled and then averaged. The average number of transients would then be multiplied by the remaining years of the 60-year life. This projected number of future transients would be multiplied by the fatigue monitoring formula coefficient for that transient to determine the projected increase in fatigue CUF and that value added to the current value of fatigue CUF. The reactor pressure vessel sees similar cycles to those seen by the RRS piping. The 40-year CUF based on design transients is much less than 1.0 and industry experience is the CUF determined based on actual cycles is usually less than the CUF based on design transients. Therefore, it is expected that this projection will show that the fatigue CUF for all locations will remain less than 1.0 through the extended operating period. This projection will be performed when the program is established.

The scope of this program will include all of the Class 1 piping except piping 1 inch and smaller that was designed to Class 2 and 3 criteria for a minimum of 7,000 cycles.

The design fatigue CUF of the RRS piping is low. The 40-year design calculation for the bounding location is 0.0986, which is a TLAA dispositioned in Section 7.2 of this report. Assuming linear extrapolation of this calculation to 60 years, the value would only be 0.1479. The BWR Primary Coolant Pressure Boundary License Renewal Industry Report (Ref. 5) states, "For fatigue to be resolved, the component must have no experience of flaws induced by fatigue and either typical evaluations of the component with similar design and operation or plant-specific evaluations show that the fatigue usage factor is less than 0.4 for SS or 0.25 for CS for at least 40 years." Therefore, it would be reasonable to exclude any location with a projected fatigue CUF less than 0.40 for 60 years from the Fatigue Monitoring Program. However, Plant Hatch will not do this unless the 60-year projection based on actual plant operating history is also less than 0.40 once the Fatigue Monitoring Program is established.

If the acceptance criteria are exceeded, corrective actions will be reanalysis, flaw (crack) growth analysis, more frequent ISI inspections, or replacement. Administrative controls

provide for formal review and approval of changes to the controlling procedures. This program will be an Appendix B program subject to evaluation by the NRC, industry, and site organizations. More details will be available on this program once the formulas are developed and the program is established.

Inservice Inspection Program (ISI)

All plant Class 1, 2, and 3 components, including the RRS stainless steel piping, valve bodies and pressure boundary bolting are in the scope of the plant's ISI program. The program includes both ASME Code requirements as well as augmented inspections required by regulation. The purpose of the program is to inspect plant components in a manner and to a schedule that is adequate, considering the components safety significance, to ensure degradation of the component is found and corrected before there is a loss of safety function.

The large-bore Class 1 piping (Section 4.2.1) welds, including the welds between the pipe and the pump casing and between the pipe and the valve bodies, periodically receive volumetric and surface examinations per ASME Section XI, Table 2500-1, Category B-J for Class 1 piping. These inspections include the most likely locations for cracking: the stainless steel piping weldments and the heat affected zone on either side of the weld. The regulatory direction contained in Generic Letter 88-01 (Ref. 9) and NUREG-0313 (Ref. 4) is also applied to this piping along with the additional guidance provided via General Electric Nuclear Energy in SIL No. 117 (Ref. 10). Although the purpose of this additional guidance is to inspect for cracking due to IGSCC (Section 5.1), cracking due to fatigue (Section 5.1) or loss of fracture toughness because of thermal aging embrittlement (Section 5.2) would also be found, should it exist.

Pipe geometry prevents volumetric exams from being effective for smaller pipe. Welds in piping 2 ½ to 4 inches in diameter only receive surface examinations. Pipe 2 inches and smaller is exempt from this requirement. This is acceptable for three reasons. The time from crack initiation to through wall propagation of small-bore piping (Section 4.2.2) is less than one operating cycle so this inspection is not effective. Leak detection allows the existence of very small leaks to be discovered so there is ample opportunity to shutdown and repair them before there is a major break. The system makeup capacity exceeds the maximum leak rate from 2 inch and smaller piping.

All the RRS commodities are subject to a VT-2 inspection during the RRS pressure boundary testing per the requirements of Category B-P of ASME Section XI. This inspection is performed near the end of an outage to ensure that unacceptable leakage is identified and corrected before returning to operation.

If they are disassembled for maintenance, the RRS pump casings (Section 4.2.3) and valve bodies (Section 4.2.4) are subject to a VT-3 inspection per the requirements of ASME Section XI, Categories B-L-2 and B-M-2 for Class 1 components. When conditions are detected during the pump casing or valve body inspections that exceed the allowable limits, engineering evaluations (such as crack growth analyses) of detected

flaws are carried out to determine acceptability of the flaws, or to establish the time for corrective actions.

Class 1 Bolting is subject to inspection every ten years. The studs from one pump casing receive a volumetric examination once every ten years per the requirements of ASME Section XI, Category B-G-1. The nuts from one pump and a sample of other Class 1 bolts and nuts receive a VT-1 visual inspection once every ten years per the requirements of ASME Section XI, Categories B-G-1 and B-G-2.

The methods of detection are prescribed in the ASME code and the applicable plant procedures. The frequency of the inspections for the RRS commodities complies with the ASME Section XI Code requirements and considers the installed materials, aging effects, reactor coolant water properties (including the use of HWC (Section 6.2) and electrochemical corrosion potential (ECP) measurements). The ISI program provides sample sizes, acceptance criteria, and corrective actions, and requires confirmation that those actions have been effective. The program also provides for monitoring and trending for timely corrective actions.

The plant is currently committed to the 1989 Edition of the ASME Section XI Code. The plant is currently required by regulation to upgrade to a newer version of the code approximately every 10 years. An addendum is issued annually with incorporation of any addenda into a base code every 3 years. ISI Inspections consist of visual, surface, and volumetric inspections as well as leakage inspection in conjunction with pressure testing. The plant ISI program is required by regulation. It well known and understood by the NRC and has been evaluated by the NRC, industry, and site organizations. The acceptability of these inservice examination program elements is supported by the evaluation findings in NUREG-0800 (Ref. 20), which states, in part,

> The conduct of periodic inspections and leakage and hydrostatic testing of pressure-retaining components of the reactor coolant pressure boundary in accordance with the requirements of Section XI of the ASME Code provides reasonable assurance that evidence of structural degradation or loss of leak-tight integrity occurring during service will be detected in time to permit corrective action before the safety function of a component is compromised.

Technical Specification Surveillance Procedures

Plant Hatch Technical Specifications include requirements for testing and inspecting safety related components to ensure their safety function is maintained. These tests and inspections are performed using surveillance procedures. Some of these tests and inspections verify requirements in the plant's Technical Specifications are met. Others verify specifications in the plant Hatch Technical Requirements Manual (TRM) are met. Requirements in the TRM are similar to Technical Specification requirements, but they have a lower level of control in that NRC approval is not required to change them. The

scope of these surveillance procedures includes requirements for monitoring Reactor Coolant System (RRS) leak rate and chemistry.

Technical Specification surveillance procedures are used to monitor the type and quantity of RRS system leakage. The Bases for the Plant Hatch Technical Specification B3.4.4 states,

> The allowable RCS operational LEAKAGE limits are based on the predicted and experimentally observed behavior of pipe cracks. The normally expected background LEAKAGE due to equipment design and the detection capability of the instrumentation for determining system LEAKAGE were also considered. The evidence from experiments suggests that, for LEAKAGE even greater than the specified unidentified LEAKAGE limits, the probability is small that the imperfection or crack associated with such leakage would grow rapidly.
>
> The unidentified LEAKAGE flow limit allows time for corrective action before the RCPB could be significantly compromised. The 5 gpm limit is a small fraction of the calculated flow from a critical crack in the primary system piping. Crack behavior from experimental programs (Refs. 4 and 5) shows that leakage rates of hundreds of gallons per minute will precede crack instability (Ref. 6).

Violation of leakage limits in Technical Specification 3.4.4 is considered to be a Limiting Condition for Operation (LCO). If excessive leakage from unidentified sources were to occur during operation, the surveillance procedures require the source of leakage be identified. If the leakage cannot be identified within a time limit or if any leakage is identified as pressure boundary leakage, the unit must be shutdown.

TRM water chemistry requirements mitigate loss of material due to crevice corrosion and pitting corrosion (Section 5.2) and cracking due to IGSCC (Section 5.1) and other mechanisms. Table T.3.4.1.1 in the TRM limits chloride concentration and conductivity of the RRS water. If the table limits are exceeded and not restored within the allowed time, the unit must be shutdown.

These procedures provide methods of detection, frequency of monitoring, acceptance criteria, and corrective actions. If corrective actions are required because a Technical Specification surveillance test is unsatisfactory, the surveillance test must be reperformed satisfactorily following completion of the corrective actions. Administrative controls are in place to provide a formal review and approval process for changes to surveillance procedures. The plant surveillance program is an Appendix B program required by regulation. It is well known and understood by the NRC and has been evaluated by the NRC, industry, and site organizations.

6.2 Mitigating Programs

- Hydrogen Water Chemistry (HWC)
- Induction Heat Stress Improvement (IHSI)
- Maintenance Procedures
- Mechanical Stress Improvement Process (MSIP)
- Water Chemistry Procedures
- Weld Overlays

Hydrogen Water Chemistry (HWC)

ECP is a measure of the oxidizing power of a solution and is a driving force for IGSCC (Section 5.1). The higher the ECP, the greater the probability of initiation and growth of cracking in austenitic stainless steels. Short-term tests have shown that IGSCC is not observed when the ECP is below -230 mV(SHE). IGSCC initiation is observed in sensitized steel when the ECP is above -230 mV (SHE), even in reactor water with low conductivity (a measure of impurities).

The addition of excess hydrogen to the feedwater (HWC) reduces the production of oxygen and peroxide by radiolysis in the core region. At Hatch, protection of the recirculation piping is achieved with lower injection rates than is needed for protection of the reactor internals. Moderate HWC (45 - 50 SCFM, or about 1.5 ppm hydrogen in the feedwater) is required for protection of the bottom head drain and core plate, which is the reactor internals area targeted for protection at Plant Hatch.

Plant Hatch has begun noble metal addition of Platinum and Rhodium on Unit 1during the Spring, 1999 outage. This will result in the same or greater protection with less hydrogen addition, which will also reduce dose rates during plant operation. Noble metal addition is planned to be used on Unit 2 starting with the next outage and is expected to be an ongoing program for both units.

At Plant Hatch, HWC controls the ECP values and thus reduces the oxygen and peroxide content and thereby, mitigates the corrosive environment in the RRS. The purpose of HWC is to prevent crack initiation and growth due to IGSCC. Plant and industry operating experience were significant contributors to development of this process. HWC at Plant Hatch has been evaluated by the NRC, industry, and site organizations.

Induction Heat Stress Improvement (IHSI)

IHSI converts the weld joint residual stresses from tensile to compressive stress, which reduces the susceptibility of the weld joint to IGSCC (Section 5.1). IHSI was used for RRS large bore piping welds on both units. The process is performed using approved plant procedures that are reviewed and approved by a formal process. This process has been evaluated by the NRC, industry, and site organizations.

Maintenance Procedures

Plant Hatch maintenance procedures provide direction and guidance for plant maintenance activities including preventive maintenance, inspections, and repairs. Welding procedures, bolt torquing procedures, procedures for disassembly, inspection, and repair of RRS components are included.

The weld procedures include a weld repair for 1 inch and smaller socket welds that have failed, or have been identified as at risk to fail. There have been no instances of weld failure recurring following the specified weld repair at Plant Hatch.

These procedures are reviewed and approved by a formal process. Plant maintenance activities are routinely evaluated by the NRC, industry, and site organizations.

Mechanical Stress Improvement (MSIP)

MSIP uses a hydraulic system to uniformly compress the entire pipe at a location near the weld joint. MSIP converts the weld joint residual stresses from tensile to compressive stress, which reduces the susceptibility of the weld joint to IGSCC (Section 5.1). MSIP was used for some of the RRS large bore piping welds on both units. The process is performed using approved plant procedures that are reviewed and approved by a formal process. This process has been evaluated by the NRC, industry, and site organizations.

Water Chemistry Procedures

Plant Hatch water chemistry procedures establish limits for the water chemistry for water from various sources as well as methods and frequency of sampling. These procedures implement the recommendations of the EPRI Water Chemistry Guidelines (Ref. 19). The scope of these procedures includes the water in RRS stainless steel piping, pumps, and valves. The purpose of these procedures is to control the chemistry of fluid systems at the plant and thereby mitigate degradation of the system components. Parameters are monitored at least daily in the RRS and include conductivity, chloride, pH, silica, sulfate, and ECP. Cracking due to IGSCC and loss of material due to crevice corrosion or pitting corrosion are the primary aging effects mitigated in the RRS, although other mechanism and effects are also mitigated by controlling these parameters. These aging effects, if left unchecked, could degrade RRS components to the point that the primary pressure boundary function would no longer be maintained. The procedures specify acceptance criteria, and in most cases, there are multiple action levels specified. For each action level, there is a required corrective action. Corrective actions include root cause determination to ensure prevention of recurrence, when appropriate. Water chemistry procedures are reviewed and approved by a formal process. As industry or plant experience shows it to be advisable, the limits are modified. During past six years there have been a total of only five reactor water chemistry events, at Plant Hatch, where the sulfate, chloride and/or conductivity limit for Action Level 1 has been exceeded. The technical evaluations conducted following these events concluded that no significant crack initiation or crack growth in plant materials of

construction will result. The water chemistry procedures are governed by Appendix B requirements and have been evaluated by the NRC, industry, and site organizations.

Weld Overlays

Because of cracking due to IGSCC (Section 5.1) in the RRS piping, the Unit 1 large-bore piping (Section 4.2.1) in this system was repaired using weld overlays. The weld overlays are made of ER308L grade stainless steel, an IGSCC resistant material. The filler metal for weld overlay repair of Inconel to stainless steel welds are Inconel 82, also an IGSCC resistant material. All weld overlay designs were prepared assuming a bounding 360 degree circumferential oriented crack through wall flaw in accordance with the requirements of the "Standard Weld Overlay" design intended for indefinite service per NUREG 0313, Revision 2 (Ref. 4). To date, none of the existing cracks have propagated into the overlay. The overlays are governed by Appendix B requirements and have been evaluated by the NRC, industry, and site organizations.

6.3 Supporting Programs

- Quality Assurance (QA) Program
- Operating Event Review Procedures

Quality Assurance (QA) Program

The QA program provides control over activities affecting the quality of structures, systems, and components consistent with their importance to safety. Activities that are controlled by the QA Program include but are not limited to:

- Administrative controls ensure that important activities are performed in accordance with procedures.
- Procedure control and review provides a formal process for review and approval of plant procedures and changes to those procedures.
- Corrective action program ensures that timely corrective actions are taken including requirements for root cause investigations and actions to prevent recurrence.
- Inservice inspection program (Section 6.1).
- Surveillance program (Section 6.1).
- Maintenance programs (Section 6.2).
- Plant chemistry (Section 6.1).

The Plant Hatch QA program applies to all plant activities and commodities discussed in this report and assures they meet appropriate sections of 10 CFR 50, Appendix B, criteria. The QA program has been evaluated by the NRC, industry and site organizations.

Operating Event Review Procedures

Plant Hatch has procedures in place to review plant and industry operating experience events. These reviews provide for corrective actions to prevent recurrence of significant plant events. Corrective actions are also taken to prevent industry events that are determined to be applicable to Plant Hatch. Sources of industry events include EPIX, GE Service Information Letters, INPO, EPRI, NEI, and NRC communications.

7.0 EVALUATION OF TIME LIMITED AGING ANALYSES

7.1 TLAA Issues and Exemptions That Require Evaluation

The Plant Hatch process (Ref. 2) was used to identify time-limited aging analysis (TLAA) issues for the RRS. A review of the design calculations and evaluations was conducted to identify potential issues. The six criteria delineated in paragraph 54.3 of the Rule (Ref. 1) were used and it was determined that the following TLAA issue applies to the RRS pressure boundary components. This issue is evaluated in Section 7.2.

- Evaluation of the large-bore stainless steel piping fatigue usage for the extended operating period,

A review of the relevant licensing correspondence identified that there are no exemptions granted under 10 CFR 50.12 that are in effect and based on TLAA issues.

7.2 Evaluation of the Time Limited Aging Analysis Issues

Fatigue

An explicit fatigue (Section 5.1) analysis was performed for the large-bore piping on both units as part of power uprate. Considering both units, for the most limiting location in the system piping and using the current licensing basis cyclic duty, the fatigue CUF at the end of a 40-year life was calculated to be 0.0986. Extending this usage factor linearly to a 60-year life yields a CUF of 0.1479 at the most limiting location. Therefore, the extrapolated CUF for the large-bore, stainless steel piping components are significantly less than 1.0. The ASME Code, Section XI, has established that cracking due to fatigue will not occur at CUF values below 1.0. Generic evaluations described in References 11, 12, and 13 demonstrate that there is adequate margin in the existing ASME Code Section III explicit fatigue design process to account for reactor water environmental effects.

The original Plant Hatch CLB required that a break point be postulated at any piping location where the projected cumulative usage factor exceeds 0.1. For the extended operating period, some locations with a 40-year CUF less than 0.1 will have a 60-year CUF greater than 0.1. The locations where this condition exists have been identified along with several possible methods of resolution. The method of resolution that will be used will be specified in the renewal application.

Plant Hatch will not revise the Class 1 piping fatigue calculations. The fatigue TLAA for large-bore stainless steel piping (Section 4.2.1) in the RRS, is dispositioned by establishing an aging management program as described in Section 4.3.1 to monitor fatigue of the large-bore stainless steel piping using the Fatigue Monitoring Program described in Section 6.1.

Class 1 small-bore piping (Section 4.2.2) 1 inch and under in diameter is designed for 7,000 full-temperature cycles. For the RRS, the system piping will not exceed 7,000 cycles during 60 years of operation. Therefore, the calculations for this piping remain valid for the extended operating period. No revision to the calculation is required and no aging management program is needed to disposition the fatigue TLAA for small-bore RRS piping.

8.0 TECHNICAL SPECIFICATION CHANGES OR ADDITIONS

The Plant Hatch technical specifications were reviewed to determine if they are affected by the results of the aging management review in Section 4.0. The review determined that the technical specifications would not need to be changed.

9.0 REFERENCES

Entire publications referenced in this report are not to be incorporated into the Plant Hatch current licensing basis (CLB). Each publication referenced is only to be included in the CLB to the extent it relates to the specific area discussed in the portion of this report that the document is referenced.

1. 10 CFR 54, "Requirements for Renewal of Operating Licenses for Nuclear Power Plants," 60 FR 22491, May 8, 1995.

2. "Edwin I. Hatch Nuclear Plant License Renewal Process Methodology Document," April 13, 1998.

3. NEI 95-10, "Revision 0, Industry Guideline on Implementing the Requirements of 10 CFR Part 54 - The License Renewal Rule," March 1996.

4. NUREG-0313, "Technical Report on Material Selection and Processing guidelines for BWR Coolant Pressure Boundary Piping," Revision 2, January 1998.

5. EPRI Report TR-103843, "BWR Primary Coolant Pressure Boundary License Renewal Industry Report," Revision 1, July 1994.

6. Standard Review Plan for the Review of License Renewal Applications for Nuclear Power Plants, Working Draft, September, 1997.

7. ASTM STP 756 – "Intergranular Stress-Corrosion Cracking Resistance of Austenitic Stainless Steel Castings," 1982

8. EPRI Report TR-106092, "Evaluation of Thermal Aging Embrittlement for Cast Austenitic Stainless Steel Components," April 1997.

9. Generic Letter 88-01, "NRC Position on IGSCC in BWR Austenitic Stainless Steel Piping," January 1988 and Supplement 1, February 1992.

10. General Electric Nuclear Energy Service Information Letter (SIL) No. 117

11. EPRI Report TR-107943, "Environmental Fatigue Evaluations of Representative BWR Components," June 1998.

12. EPRI Report TR-110356, "Evaluation of Environmental Thermal Fatigue Effects on Selected Components in a BWR Plant," April 1998.

13. EPRI Report TR-107521, "Generic License Renewal Technical Issues Summary," Final Report, April 1998.

14. General Electric Service Information Letter (SIL) No. , Supplement 1, "Byron-Jackson Recirculation Pump Heat Exchanger Leakage," March 23, 1990

15. EPRI Bolting Procedures Reference Manual, NP5067, Vol. 1, "A Reference Manual for Nuclear Power Plant Maintenance Personnel, Large Bolt Manual."

16. Pressure Vessel Research Council WRC Bulletin 1993, Nuclear Piping Criteria for Advance Light Water Reactors, "Failure Mechanisms and Corrective Actions."

17. NRC AEOD/E308 Report, 4/19/83 "Cracks and Leaks in Small Diameter Piping."

18. BAW-2243A, "Demonstration of the Management of Aging Effects for the Reactor Coolant System Piping", The B&W Owners Group Generic License Renewal Program, June 1996.

19. EPRI Report TR- 103515-R1, "BWR Water Chemistry Guidelines - 1996 Revision," BWRVIP-29, 2493, Final Report, December 1996.

20. NUREG-0800, "Standard Review Plan for the Review of Safety Analysis Reports for Nuclear Power Plants" June 1987.

10.0 DEFINITIONS

1. **BWR** – Boiling Water Reactor

2. **CASS** – Cast Austenitic Stainless Steel

3. **CLB** – Current Licensing Basis

4. **CUF** – Cumulative Usage Factor

5. **Detrimental Aging Effect** – Plausible aging effects that are determined to be applicable for Plant Hatch and could cause sufficient degradation of the SCC to potentially result in a loss of the intended function

6. **ECP** – Electrochemical Corrosion Potential

7. **FSAR** – Final Safety Analysis Report

8. **HWC** – Hydrogen Water Chemistry

9. **IHSI** – Induction Heating Stress Improvement

10. **IPA** – Integrated Plant Assessment

11. **LCO** – Limiting Condition for Operation

12. **LPCI** – Low Pressure Coolant Injection

13. **PCPB** – Primary Coolant Pressure Boundary

14. **Plausible Aging Effect** – Aging effect with evidence of possibly occurring in the industry for the material and environment under consideration for Plant Hatch.

15. **PRA** – Probability Risk Assessment

16. **RHR** – Residual Heat Removal

17. **RPV** – Reactor Pressure Vessel

18. **RRS** – Reactor Recirculation System

19. **RWCU** – Reactor Water Cleanup

20. **SCC** – Structure, Component, or Commodity

21. **SSC** – System, Structure, or Component

22. **TLAA** – Time Limited Aging Analysis