Lewis Sumner
Vice President
Hatch Project Support

Southern Nuclear Operating Company, Inc.
40 Inverness Parkway
Post Office Box 1295
Birmingham, Alabama 35201

Tel 205.992.7279
Fax 205.992.0341

SOUTHERN COMPANY
Energy to Serve Your World℠

March 31, 2000

Docket Nos. 50-321
50-366

HL-5919

U.S. Nuclear Regulatory Commission
ATTN: Document Control Desk
Washington, D.C. 20555

Edwin I. Hatch Nuclear Plant
FSAR Amendment

Ladies and Gentlemen:

In accordance with the provisions of 10 CFR 50.71, Southern Nuclear Operating Company (SNC) hereby submits 1 signed original and 10 copies of this amendment to the Final Safety Analysis Reports (FSARs) (Revision 18B) for Plant Hatch Units 1 and 2.

Enclosed FSAR amendment 18B primarily consists of changes to improve the accuracy, completeness, and quality of the FSARs consistent with the requirements of 10 CFR 50.71. These changes were prepared as part of the ongoing Plant Hatch FSAR upgrade program.

In accordance with NEI 98-03 Revision 1, section A6, SNC hereby reports the following substantial information removed from the Unit 1 and Unit 2 FSARs in amendment 18B. Unit 1 FSAR Appendix G, Plant Nuclear Safety Operational Analysis, and Unit 2 FSAR Supplement 15C, Nuclear Safety Operational Analysis (NSOA), have been combined, with redundant information removed. As such, Unit 1 FSAR Appendix G is deleted in its entirety and the combined NSOA is contained in Unit 2 FSAR Supplement 15C. This change is consistent with the virtually identical system designs, and similar thermal-hydraulic and transient behavior characteristics of the two units.

In accordance with 10 CFR 50.71(e), Mr. H. L. Sumner, Jr. states he is a Vice President of Southern Nuclear Operating Company and is authorized to execute this oath on behalf of Southern Nuclear Operating Company, and to the best of his knowledge and belief, the information contained in the enclosed FSAR amendment accurately presents changes made since the previous submittal, necessary to reflect information and analyses submitted to the Commission or prepared pursuant to Commission requirements.

Respectfully submitted,

Lewis Sumner

H. L. Sumner, Jr.

A053 1/9
2 copies recd in damaged condition

Sworn to and subscribed before me this 31st *day of* March 2000.

Elaine E. Bolton
Notary Public

My commission expires: 5-25-2003

CLT/eb

Enclosures:
1. Plant Hatch Unit 1 FSAR Amendment 18B
2. Plant Hatch Unit 2 FSAR Amendment 18B

cc: Southern Nuclear Operating Company (w/o enclosures)
Mr. P. H. Wells, Nuclear Plant General Manager
SNC Document Management (R-Type A02.001)

U. S. Nuclear Regulatory Commission, Washington, D. C.
Mr. L. N. Olshan, Licensing Project Manager - Hatch

U. S. Nuclear Regulatory Commission, Region II
Mr. L. A. Reyes, Regional Administrator
Mr. J. T. Munday, Senior Resident Inspector - Hatch

State of Georgia (w/o enclosures)
Mr. L.C. Barrett, Commissioner - Department of Natural Resources

Lewis Sumner
Vice President
Hatch Project Support

Southern Nuclear Operating Company, Inc.
40 Inverness Parkway
Post Office Box 1295
Birmingham, Alabama 35201

Tel 205.992.7279
Fax 205.992.0341

SOUTHERN COMPANY
Energy to Serve Your World℠

March 31, 2000

HL-5919

Docket Nos. 50-321
50-366

U.S. Nuclear Regulatory Commission
ATTN: Document Control Desk
Washington, D.C. 20555

Edwin I. Hatch Nuclear Plant
FSAR Amendment

Ladies and Gentlemen:

In accordance with the provisions of 10 CFR 50.71, Southern Nuclear Operating Company (SNC) hereby submits 1 signed original and 10 copies of this amendment to the Final Safety Analysis Reports (FSARs) (Revision 18B) for Plant Hatch Units 1 and 2.

Enclosed FSAR amendment 18B primarily consists of changes to improve the accuracy, completeness, and quality of the FSARs consistent with the requirements of 10 CFR 50.71. These changes were prepared as part of the ongoing Plant Hatch FSAR upgrade program.

In accordance with NEI 98-03 Revision 1, section A6, SNC hereby reports the following substantial information removed from the Unit 1 and Unit 2 FSARs in amendment 18B. Unit 1 FSAR Appendix G, Plant Nuclear Safety Operational Analysis, and Unit 2 FSAR Supplement 15C, Nuclear Safety Operational Analysis (NSOA), have been combined, with redundant information removed. As such, Unit 1 FSAR Appendix G is deleted in its entirety and the combined NSOA is contained in Unit 2 FSAR Supplement 15C. This change is consistent with the virtually identical system designs, and similar thermal-hydraulic and transient behavior characteristics of the two units.

In accordance with 10 CFR 50.71(e), Mr. H. L. Sumner, Jr. states he is a Vice President of Southern Nuclear Operating Company and is authorized to execute this oath on behalf of Southern Nuclear Operating Company, and to the best of his knowledge and belief, the information contained in the enclosed FSAR amendment accurately presents changes made since the previous submittal, necessary to reflect information and analyses submitted to the Commission or prepared pursuant to Commission requirements.

Respectfully submitted,

Lewis Sumner

H. L. Sumner, Jr.

Sworn to and subscribed before me this 31st *day of* March 2000.

Elaine E. Bolton *My commission expires:* 5-25-2003
Notary Public

CLT/eb

Enclosures:
1. Plant Hatch Unit 1 FSAR Amendment 18B
2. Plant Hatch Unit 2 FSAR Amendment 18B

cc: Southern Nuclear Operating Company (w/o enclosures)
Mr. P. H. Wells, Nuclear Plant General Manager
SNC Document Management (R-Type A02.001)

U. S. Nuclear Regulatory Commission, Washington, D. C.
Mr. L. N. Olshan, Licensing Project Manager - Hatch

U. S. Nuclear Regulatory Commission, Region II
Mr. L. A. Reyes, Regional Administrator
Mr. J. T. Munday, Senior Resident Inspector - Hatch

State of Georgia (w/o enclosures)
Mr. L.C. Barrett, Commissioner - Department of Natural Resources

HNP-1 INSERTION INSTRUCTIONS FOR
REVISION 18B

PAGE	INSTRUCTION
Active Page List (all pages)	Replace
Summary Table of Contents	
p. xxiii/xxiv	Replace
p. xxxiii/xxxiv	Replace
p. xxxvii/xxxviii	Replace
t. 4.2-6	Replace
Deletion sheet for figure 4.2-1	Remove
Deletion sheet for figures 4.2-4, 4.2-5, and 4.2-6	Remove
f. 4.2-8	Remove
f. 4.4-4	Remove
Deletion sheet for figure 4.9-2	Remove
p. 5.2-57/58	Replace
Deletion sheet for table 5.2-2	Remove
Deletion sheet for figure 5.2-1	Remove
Deletion sheet for figure 7.2-8	Remove
p. 7.4-1/2	Replace
f. 7.5-11	Remove
f. 7.5-12	Remove
f. 7.7-2	Remove
t. 10.20-2 (all sheets)	Remove
* Deletion sheet for tables 11.1-1 and 11.1-2	Remove
Deletion sheet for table A.4-2 (all sheets)	Remove
Appendix I Table of Contents	
p. i/ii	Replace
tab for Appendix L	Remove
p. i/ii	Remove
p. iii/iv	Remove
tab L.1	Remove
p. L.1-1/2	Remove
tab L.2	Remove
p. L.2-1	Remove
tab L.3	Remove
p. L.3-1 thru L.3-5	Remove
f. L.3-1	Remove
tab L.4	Remove
p. L.4-1/2	Remove
t. L.4-1 thru L.4-2 (all sheets)	Remove
tab L.5	Remove
p. L.5-1 thru L.5-6	Remove
t. L.5-1	Remove
tab L.6	Remove
p. L.6-1 thru L.6-10	Remove

* If there is a deletion sheet for these tables in your copy, please remove. If there is not a deletion sheet for these tables in your copy, do nothing.

HNP-1 INSERTION INSTRUCTIONS FOR
REVISION 18B

PAGE	INSTRUCTION
t. L.6-1 thru L.6-3 (all sheets)	Remove
f. L.6-1 thru L.6-10	Remove
tab L.7	Remove
p. L.7-1	Remove
t. L.7-1	Remove
t. L.7-2	Remove
tab for Appendix P	Remove
Appendix P Table of Contents	
p. i	Remove
tab P.1	Remove
p. p.1-1	Remove
Any other Appendix P tabs	Remove
tab for Appendix Q	Remove
Appendix Q Table of Contents	
p. i thru iv	Remove
tab Q.1	Remove
p. Q.1-1	Remove
tab Q.2	Remove
p. Q.2-1 thru Q.2-3	Remove
t. Q.2-1 thru Q.2-4	Remove
f. Q.2-1 thru Q.2-8	Remove
tab Q.3	Remove
p. Q.3-1 thru Q.3-13	Remove
t. Q.3-1	Remove
tab Q.4	Remove
p. Q.4-1 thru Q.4-10	Remove
f. Q.4-1 thru Q.4-4	Remove
tab Q.5	Remove
p. Q.5-1 thru Q.5-22	Remove
tab Q.6	Remove
p. Q.6-1 thru Q.6-12	Remove
t. Q.6-1 thru Q.6-3	Remove
f. Q.6-1	Remove
f. Q.6-2	Remove
Revision 18B Tab	Insert
SNC Letter	Insert behind 18B tab
These Instructions	Insert behind SNC Letter
Acknowledgement Receipt	Sign & return

EDWIN I. HATCH NUCLEAR PLANT-UNIT 1
FSAR UPDATE REVISION 18B

ACTIVE PAGE LISTING

All pages of the Edwin I. Hatch Unit 1 FSAR Update are Revision 0 7/82, Revision 1 7/83, Revision 2 7/84, Revision 3 7/85, Revision 4 7/86, Revision 5 7/87, Revision 6 7/88, Revision 7 7/89, Revision 8 7/90, Revision 9A 10/90, Revision 9B 1/91, Revision 9C 7/91, Revision 10A 10/91, Revision 10B 2/92, Revision 10C 7/92, Revision 11A 10/92, Revision 11B 1/93, Revision 11C 4/93, Revision 11D 7/93, Revision 12A 10/93, Revision 12B 1/94, Revision 12C 4/94, Revision 12D 7/94, Revision 13A 10/94, Revision 13B 1/95, Revision 13C 4/95, Revision 13D 7/95, Revision 14A 10/95, Revision 14B 1/96, Revision 14C 4/96, Revision 14D 7/96, Revision 15A 2/97, Revision 15B 7/97, Revision 16 7/98, Revision 17A 1/99, Revision 17B 7/99, Revision 18A 01/00 or Revision 18B 03/00.

p. i (Rev. 18A)
p. ii (Rev. 18A)
p. iii (Rev. 18A)
p. iv (Rev. 18A)
p. v (Rev. 18A)
p. vi (Rev. 18A)
p. vii (Rev. 18A)
p. viii (Rev. 18A)
p. ix (Rev. 18A)
p. x (Rev. 18A)
p. xi (Rev. 18A)
p. xii (Rev. 18A)
p. xiii (Rev. 18A)
p. xiv (Rev. 18A)
p. xv (Rev. 18A)
p. xvi (Rev. 18A)
p. xvii (Rev. 18A)
p. xviii (Rev. 18A)
p. xix (Rev. 18A)
p. xx (Rev. 18A)
p. xxi (Rev. 18A)
p. xxii (Rev. 18A)
p. xxiii (Rev. 18B)
p. xxiv (Rev. 18B)
p. xxv (Rev. 18A)
p. xxvi (Rev. 18A)
p. xxvii (Rev. 18A)
p. xxviii (Rev. 18A)
p. xxix (Rev. 18A)
p. xxx (Rev. 18A)
p. xxxi (Rev. 18A)
p. xxxii (Rev. 18A)
p. xxxiii (Rev. 18B)
p. xxxiv (Rev. 18A)
p. xxxv (Rev. 18A)
p. xxxvi (Rev. 18A)
p. xxxvii (Rev. 18B)
p. xxxviii (Rev. 18A)
p. i (chapter 1) (Rev. 18A)
p. ii (chapter 1) (Rev. 18A)
p. iii (chapter 1) (Rev. 18A)
p. iv (chapter 1) (Rev. 18A)
p. v (chapter 1) (Rev. 18A)
p. 1.1-1 (Rev. 18A)
p. 1.1-2 (Rev. 15B)
p. 1.1-3 (Rev. 15B)
p. 1.2-1 (Rev. 18A)
p. 1.2-2 (Rev. 17A)
p. 1.2-2a (Rev. 18A)
p. 1.2-2b (Rev. 15B)
p. 1.2-3 (Rev. 18A)
p. 1.2-4 (Rev. 18A)
p. 1.2-5 (Rev. 18A)
p. 1.2-6 (Rev. 0)
p. 1.2-7 (Rev. 18A)
p. 1.2-8 (Rev. 18A)
p. 1.2-9 (Rev. 0)
p. 1.2-10 (Rev. 17A)
p. 1.2-11 (Rev. 18A)
p. 1.2-12 (Rev. 17A)
p. 1.2-13 (Rev. 18A)
p. 1.2-14 (Rev. 17A)
f. 1.2-1 (Rev. 0)
f. 1.2-2 (Rev. 3)
p. 1.3-1 (Rev. 18A)
p. 1.3-2 (Rev. 18A)
p. 1.3-3 (Rev. 18A)
p. 1.4-1 (Rev. 18A)
p. 1.5-1 (Rev. 18A)
p. 1.6-1 (Rev. 0)
p. 1.6-2 (Rev. 0)
p. 1.6-3 (Rev. 0)

p. 1.6-4 (Rev. 1)
p. 1.6-4a (Rev. 1)
p. 1.6-4b (Rev. 1)
f. 1.6-1 (sheet 1) (Rev. 11B)
f. 1.6-1 (sheet 2) (Rev. 1)
f. 1.6-1 (sheet 3) (Rev. 11B)
f. 1.6-2 (Rev. 4)
p. 1.7-1 (Rev. 0)
p. 1.8-1 (Rev 18A)
p. 1.9-1 (Rev. 15B)
p. 1.10-1 (Rev. 0)
p. 1.11-1 (Rev. 18A)
p. 1.11-2 (Rev. 18A)
t. 1.11-1 (sheet 1) (Rev. 18A)
t. 1.11-1 (sheet 2) (Rev. 18A)
t. 1.11-1 (sheet 3) (Rev. 18A)
t. 1.11-2 (sheet 1) (Rev. 18A)
t. 1.11-2 (sheet 2) (Rev. 18A)
p. 1.12-1 (Rev. 0)
p. 1.12-2 (Rev. 18A)
p. 1.12-3 (Rev. 10A)
p. 1.13-1 (Rev 18A)
p. i (chapter 2) (Rev. 18A)
p. ii (chapter 2) (Rev. 18A)
p. iii (chapter 2) (Rev. 18A)
p. iv (chapter 2) (Rev. 18A)
p. 2.1-1 (Rev. 0)
p. 2.2-1 (Rev. 17A)
p. 2.2-2 (Rev. 17A)
p. 2.2-3 (Rev. 17A)
p. 2.2-4 (Rev. 17A)
p. 2.2-5 (Rev. 17A)
p. 2.2-6 (Rev. 17A)
p. 2.2-7 (Rev. 17A)
p. 2.2-8 (Rev. 17A)
p. 2.2-9 (Rev. 17A)
p. 2.2-10 (Rev. 17A)
p. 2.2-11 (Rev. 17A)
t. 2.2-1 (Rev. 17A)
t. 2.2-2 (Rev. 17A)
t. 2.2-3 (Sheet 1) (Rev. 17A
t. 2.2-3 (Sheet 2) (Rev. 17A)
t. 2.2-4 (Rev. 17A)
t. 2.2-5 (Rev. 17A)
t. 2.2-6 (Rev. 17A)
t. 2.2-7 (Rev. 17A)
t. 2.2-8 (sheet 1) (Rev. 17A)
t. 2.2-8 (sheet 2) (Rev. 17A)
f. 2.2-1 (Rev. 17A)
f. 2.2-2 (Rev. 17A)
f. 2.2-3 (Rev. 17A)
f. 2.2-4 (Rev. 17A)
f. 2.2-5 (Rev. 17A)
f. 2.2-6 (Rev. 0)
p. 2.3-1 (Rev. 18A)
p. 2.4-1 (Rev. 0)
p. 2.5-1 (Rev. 0)
p. 2.5-2 (Rev. 0)
p. 2.5-3 (Rev. 2)
p. 2.5-4 (Rev. 0)
f. 2.5-1 (Rev. 0)
f. 2.5-2 (Rev. 0)
f. 2.5-3 (Rev. 0)
p. 2.6-1 (Rev. 14D)
p. 2.7-1 (Rev. 0)
p. 2.7-2 (Rev. 0)
p. 2.7-3 (Rev. 0)
p. 2.7-4 (Rev. 0)
p. 2.7-5 (Rev. 0)
p. 2.7-6 (Rev. 0)
p. 2.7-7 (Rev. 0)
p. 2.7-8 (Rev. 0)
f. 2.7-1 (Rev. 0)
f. 2.7-2 (Rev. 0)
f. 2.7-3 (Rev. 0)
f. 2.7-4 (Rev. 0)
f. 2.7-5 (Rev. 0)
f. 2.7-6 (Rev. 0)
f. 2.7-7 (Rev. 0)
f. 2.7-8 (Rev. 0)
f. 2.7-9 (Rev. 0)
f. 2.7-10 (Rev. 0)
f. 2.7-11 (Rev. 0)
f. 2.7-12 (Rev. 0)
f. 2.7-13 (Rev. 0)
f. 2.7-14 (Rev. 0)
f. 2.7-15 (Rev. 0)
f. 2.7-16 (Rev. 0)
f. 2.7-17 (Rev. 0)
f. 2.7-18 (Rev. 0)
f. 2.7-19 (Rev. 0)
f. 2.7-20 (Rev. 0)
f. 2.7-21 (Rev. 0)
f. 2.7-22 (Rev. 0)
f. 2.7-23 (Rev. 0)
f. 2.7-24 (Rev. 0)
f. 2.7-25 (Rev. 0)
p. 2.8-1 (Rev. 1)
p. i (chapter 3) (Rev. 18A)
p. 3.1-1 (Rev. 18A)
p. 3.2-1 (Rev. 18A)
p. 3.3-1 (Rev. 18A)
p. 3.4-1 (Rev. 18A)
p. 3.5-1 (Rev. 18A)

p. 3.6-1 (Rev. 18A)
p. 3.7-1 (Rev. 18A)
p. 3.8-1 (Rev. 18A)
p. i (chapter 4) (Rev. 18A)
p. ii (chapter 4) (Rev. 15B)
p. iii (chapter 4) (Rev. 15B)
p. iv (chapter 4) (Rev. 18A)
p. v (chapter 4) (Rev. 17A)
p. vi (chapter 4) (Rev. 15B)
p. 4.1-1 (Rev. 18A)
p. 4.1-2 (Rev. 18A)
p. 4.2-1 (Rev. 16)
p. 4.2-2 (Rev. 16)
p. 4.2-3 (Rev. 17A)
p. 4.2-4 (Rev. 18A)
p. 4.2-5 (Rev. 18A)
p. 4.2-6 (Rev. 16)
p. 4.2-7 (Rev. 18A)
p. 4.2-8 (Rev. 18A)
p. 4.2-8a (Rev. 18A)
p. 4.2-8b (Rev. 18A)
p. 4.2-9 (Rev. 16)
p. 4.2-10 (Rev. 17A)
p. 4.2-11 (Rev. 16)
p. 4.2-12 (Rev. 16)
p. 4.2-13 (Rev. 16)
p. 4.2-14 (Rev. 16)
p. 4.2-15 (Rev. 16)
p. 4.2-16 (Rev. 18A)
p. 4.2-17 (Rev. 18A)
p. 4.2-18 (Rev. 18A)
p. 4.2-19 (Rev. 17A)
p. 4.2-20 (Rev. 18A)
p. 4.2-21 (Rev. 18A)
p. 4.2-22 (Rev. 16)
p. 4.2-23 (Rev. 16)
p. 4.2-24 (Rev. 16)
p. 4.2-25 (Rev. 16)
p. 4.2-26 (Rev. 17A)
p. 4.2-27 (Rev. 16)
t. 4.2-1 (Rev. 0)
t. 4.2-2 (Rev. 12A)
t. 4.2-3 (Rev. 13C)
t. 4.2-4 (Sheet 1) (Rev. 17A)
t. 4.2-4 (Sheet 2) (Rev. 17A)
t. 4.2-4 (Sheet 3) (Rev. 17A)
t. 4.2-5 (Rev. 17A)
t. 4.2-6 (Rev. 18B)
f. 4.2-2 (sheet 1) (Rev. 7)
f. 4.2-2 (sheet 2) (Rev. 13D)
f. 4.2-2 (sheet 3) (Rev. 5)
f. 4.2-3 (Rev. 5)
f. 4.2-7 (Sheet 1) (Rev. 18A)
f. 4.2-7 (Sheet 2) (Rev. 18A)
f. 4.2-7 (Sheet 3) (Rev. 18A)
p. 4.3-1 (Rev. 18A)
p. 4.3-2 (Rev. 9C)
p. 4.3-3 (Rev. 18A)
p. 4.3-4 (Rev. 0)
p. 4.3-5 (Rev. 18A)
p. 4.3-6 (Rev. 18A)
p. 4.3-7 (Rev. 9A)
p. 4.3-8 (Rev. 0)
t. 4.3-1 (Rev. 15B)
f. 4.3-1 (Rev. 0)
f. 4.3-2 (Rev. 17B)
f. 4.3-3 (Rev. 0)
f. 4.3-4 (Rev. 0)
p. 4.4-1 (Rev. 18A)
p. 4.4-2 (Rev. 18A)
p. 4.4-3 (Rev. 17A)
p. 4.4-4 (Rev. 1)
p. 4.4-5 (Rev. 17A)
p. 4.4-6 (Rev. 18A)
p. 4.4-7 (Rev. 18A)
p. 4.4-8 (Rev. 18A)
p. 4.4-9 (Rev. 18A)
t. 4.4-1 (Rev. 18A)
f. 4.4-1 (Rev. 17A)
f. 4.4-2 (Rev. 0)
f. 4.4-3 (Rev. 0)
p. 4.5-1 (Rev. 0)
p. 4.5-2 (Rev. 18A)
f. 4.5-1 (Rev. 0)
p. 4.6-1 (Rev. 18A)
p. 4.6-2 (Rev. 18A)
p. 4.6-3 (Rev. 17A)
p. 4.6-4 (Rev. 17A)
p. 4.6-5 (Rev. 18A)
p. 4.6-6 (Rev. 18A)
p. 4.6-7 (Rev. 18A)
p. 4.6-8 (Rev. 18A)
f. 4.6-1 (Rev. 3)
f. 4.6-2 (Rev. 0)
p. 4.7-1 (Rev. 3)
p. 4.7-2 (Rev. 18A)
p. 4.7-3 (Rev. 15A)
p. 4.7-4 (Rev. 15A)
p. 4.7-5 (Rev. 15A)
p. 4.7-6 (Rev. 15B)
p. 4.7-7 (Rev. 15A)
p. 4.7-8 (Rev. 18A)
t. 4.7-1 (Rev. 15B)
f. 4.7-1 (sheet 1) (Rev. 17B)

f. 4.7-1 (sheet 2) (Rev. 17B)
f. 4.7-2 (sheet 1) (Rev. 18A)
f. 4.7-2 (sheet 2) (Rev. 18A)
f. 4.7-2 (sheet 3) (Rev. 12C)
f. 4.7-2 (sheet 4) (Rev. 18A)
f. 4.7-2 (sheet 5) (Rev. 18A)
f. 4.7-2 (sheet 6) (Rev. 18A)
f. 4.7-2 (sheet 7) (Rev. 17A)
f. 4.7-2 (sheet 8) (Rev. 17A)
f. 4.7-3 (Rev. 18A)
p. 4.8-1 (Rev. 18A)
p. 4.8-2 (Rev. 18A)
p. 4.8-3 (Rev. 18A)
p. 4.8-4 (Rev. 18A)
p. 4.8-5 (Rev. 18A)
p. 4.8-6 (Rev. 18A)
p. 4.8-7 (Rev. 18A)
t. 4.8-1 (Rev. 15B)
t. 4.8-2 (Rev. 15B)
f. 4.8-1 (sheet 1) (Rev. 18A)
f. 4.8-1 (sheet 2) (Rev. 17B)
p. 4.9-1 (Rev. 4)
p. 4.9-2 (Rev. 9B)
p. 4.9-3 (Rev. 18A)
p. 4.9-4 (Rev. 18A)
t. 4.9-1 (Rev. 7)
f. 4.9-1 (sheet 1) (Rev. 17B)
f. 4.9-1 (sheet 2) (Rev. 17B)
f. 4.9-3 (sheet 1) (Rev. 5)
f. 4.9-3 (sheet 2) (Rev. 17B)
p. 4.10-1 (Rev. 0)
p. 4.10-2 (Rev. 18A)
p. 4.10-3 (Rev. 10C)
p. 4.10-4 (Rev. 0)
p. 4.10-5 (Rev. 0)
p. 4.10-6 (Rev. 0)
p. 4.10-7 (Rev. 14D)
p. 4.10-8 (Rev. 15B)
p. 4.10-9 (Rev. 15B)
p. 4.10-10 (Rev. 15B)
p. 4.10-11 (Rev. 15B)
p. 4.10-12 (Rev. 15B)
p. 4.10-13 (Rev. 18A)
p. 4.10-14 (Rev. 18A)
p. 4.10-15 (Rev. 0)
p. 4.10-16 (Rev. 0)
t. 4.10-1 (Rev. 4)
f. 4.10-1 (Rev. 0)
f. 4.10-2 (Rev. 1)
f. 4.10-3 (Rev. 1)
f. 4.10-4 (Rev. 11C)
f. 4.10-5 (Rev. 15B)
f. 4.10-6 (Rev. 0)
f. 4.10-7 (Rev. 1)
f. 4.10-8 (Rev. 15B)
f. 4.10-9 (Rev. 15B)
f. 4.10-10 (Rev. 0)
f. 4.10-11 (Rev. 0)
p. 4.11-1 (Rev. 16)
p. 4.11-2 (Rev. 17A)
p. 4.11-3 (Rev. 18A)
p. 4.11-4 (Rev. 15B)
p. 4.11-5 (Rev. 18A)
t. 4.11-1 (Rev. 16)
f. 4.11-1 (Rev. 3)
f. 4.11-2 (Rev. 3)
p. i (chapter 5) (Rev. 18A)
p. ii (chapter 5) (Rev. 18A)
p. iii (chapter 5) (Rev. 18A)
p. iv (chapter 5) (Rev. 18A)
p. v (chapter 5) (Rev. 9A)
p. 5.1-1 (Rev. 18A)
p. 5.1-2 (Rev. 18A)
p. 5.2-1 (Rev. 18A)
p. 5.2-2 (Rev. 2)
p. 5.2-3 (Rev. 18A)
p. 5.2-4 (Rev. 18A)
p. 5.2-5 (Rev. 18A)
p. 5.2-6 (Rev. 18A)
p. 5.2-7 (Rev. 18A)
p. 5.2-8 (Rev. 18A)
p. 5.2-9 (Rev. 18A)
p. 5.2-10 (Rev. 18A)
p. 5.2-11 (Rev. 18A)
p. 5.2-12 (Rev. 18A)
p. 5.2-13 (Rev. 18A)
p. 5.2-14 (Rev. 18A)
p. 5.2-15 (Rev. 18A)
p. 5.2-16 (Rev. 18A)
p. 5.2-17 (Rev. 18A)
p. 5.2-18 (Rev. 18A)
p. 5.2-19 (Rev. 18A)
p. 5.2-20 (Rev. 18A)
p. 5.2-21 (Rev. 18A)
p. 5.2-22 (Rev. 18A)
p. 5.2-23 (Rev. 18A)
p. 5.2-24 (Rev. 18A)
p. 5.2-25 (Rev. 18A)
p. 5.2-26 (Rev. 9C)
p. 5.2-27 (Rev. 18A)
p. 5.2-28 (Rev. 18A)
p. 5.2-29 (Rev. 18A)
p. 5.2-30 (Rev. 18A)
p. 5.2-31 (Rev. 18A)

p. 5.2-32 (Rev. 18A)
p. 5.2-33 (Rev. 18A)
p. 5.2-34 (Rev. 18A)
p. 5.2-35 (Rev. 18A)
p. 5.2-36 (Rev. 18A)
p. 5.2-37 (Rev. 18A)
p. 5.2-38 (Rev. 18A)
p. 5.2-39 (Rev. 18A)
p. 5.2-40 (Rev. 18A)
p. 5.2-41 (Rev. 0)
p. 5.2-42 (Rev. 2)
p. 5.2-43 (Rev. 1)
p. 5.2-44 (Rev. 18A)
p. 5.2-45 (Rev. 18A)
p. 5.2-46 (Rev. 18A)
p. 5.2-47 (Rev. 18A)
p. 5.2-48 (Rev. 15B)
p. 5.2-49 (Rev. 18A)
p. 5.2-50 (Rev. 18A)
p. 5.2-51 (Rev. 18A)
p. 5.2-52 (Rev. 18A)
p. 5.2-53 (Rev. 18A)
p. 5.2-54 (Rev. 18A)
p. 5.2-55 (Rev. 18A)
p. 5.2-56 (Rev. 0)
p. 5.2-57 (Rev. 18A)
p. 5.2-58 (Rev. 18B)
p. 5.2-59 (Rev. 18A)
p. 5.2-59a (Rev. 18A)
p. 5.2-59b (Rev. 18A)
p. 5.2-60 (Rev. 17A)
p. 5.2-61 (Rev. 17A)
p. 5.2-62 (Rev. 0)
p. 5.2-63 (Rev. 17A)
p. 5.2-64 (Rev. 17A)
p. 5.2-65 (Rev. 8)
p. 5.2-66 (Rev. 8)
p. 5.2-67 (Rev. 9B)
p. 5.2-68 (Rev. 15B)
p. 5.2-69 (Rev. 18A)
t. 5.2-1 (sheet 1) (Rev. 15B)
t. 5.2-1 (sheet 2) (Rev. 15B)
t. 5.2-3 (sheet 1) (Rev. 18A)
t. 5.2-3 (sheet 2) (Rev. 18A)
t. 5.2-4 (Rev. 15B)
t. 5.2-5 (Rev. 18A)
t. 5.2-6 (sheet 1) (Rev. 12A)
t. 5.2-6 (sheet 2) (Rev. 1)
t. 5.2-6 (sheet 3) (Rev. 0)
t. 5.2-7 (Rev. 0)
t. 5.2-8 (sheet 1) (Rev. 2)
t. 5.2-8 (sheet 2) (Rev. 12A)
t. 5.2-9 (Rev. 0)
t. 5.2-10 (sheet 1) (Rev. 0)
t. 5.2-10 (sheet 2) (Rev. 1)
t. 5.2-11 (Rev. 0)
f. 5.2-2 (Rev. 0)
f. 5.2-3 (Rev. 0)
f. 5.2-4 (Rev. 0)
f. 5.2-5 (Rev. 0)
f. 5.2-6 (Rev. 0)
f. 5.2-7 (Rev. 0)
f. 5.2-8 (Rev. 0)
f. 5.2-9 (Rev. 17B)
f. 5.2-10 (Rev. 0)
f. 5.2-11 (Rev. 0)
f. 5.2-12 (Rev. 18A)
f. 5.2-13 (Rev. 18A)
f. 5.2-14 (Rev. 0)
f. 5.2-15 (Rev. 9B)
f. 5.2-16 (Rev. 0)
f. 5.2-17 (Rev. 0)
f. 5.2-18 (Rev. 0)
f. 5.2-19 (Rev. 0)
f. 5.2-20 (Rev. 11A)
f. 5.2-21 (sheet 1) (Rev. 9A)
f. 5.2-21 (sheet 2) (Rev. 9A)
f. 5.2-21 (sheet 3) (Rev. 9A)
f. 5.2-21 (sheet 4) (Rev. 18A)
f. 5.2-21 (sheet 5) (Rev. 18A)
f. 5.2-22 (Rev. 1)
f. 5.2-23 (Rev. 6)
f. 5.2-24 (Rev. 0)
f. 5.2-25 (Rev. 0)
f. 5.2-26 (Rev. 0)
f. 5.2-27 (Rev. 0)
f. 5.2-28 (Rev. 0)
p. 5.3-1 (Rev. 18A)
p. 5.3-2 (Rev. 18A)
p. 5.3-3 (Rev. 17A)
p. 5.3-4 (Rev. 16)
p. 5.3-5 (Rev. 16)
p. 5.3-6 (Rev. 16)
p. 5.3-7 (Rev. 16)
p. 5.3-8 (Rev. 18A)
f. 5.3-1 (sheet 1) (Rev. 18A)
f. 5.3-1 (sheet 2) (Rev. 17A)
f. 5.3-2 (Rev. 1)
p. i (chapter 6) (Rev. 18A)
p. ii (chapter 6) (Rev. 18A)
p. iii (chapter 6) (Rev. 18A)
p. 6.1-1 (Rev. 18A)
p. 6.2-1 (Rev. 18A)
p. 6.3-1 (Rev. 18A)

p. 6.3-2 (Rev. 18A)
t. 6.3-1 (Rev. 18A)
f. 6.3-1 (Rev. 18A)
f. 6.3-2 (Rev. 17A)
p. 6.4-1 (Rev. 18A)
p. 6.4-2 (Rev. 18A)
p. 6.4-3 (Rev. 17A)
p. 6.4-4 (Rev. 18A)
p. 6.4-5 (Rev. 18A)
p. 6.4-6 (Rev. 18A)
p. 6.4-7 (Rev. 18A)
p. 6.4-8 (Rev. 16)
p. 6.4-9 (Rev. 18A)
p. 6.4-10 (Rev. 18A)
f. 6.4-1 (Rev. 18A)
f. 6.4-2 (Rev. 18A)
f. 6.4-3 (sheet 1) (Rev. 18A)
f. 6.4-3 (sheet 2) (Rev. 18A)
p. 6.5-1 (Rev. 18A)
p. 6.5-2 (Rev. 18A)
p. 6.5-3 (Rev. 18A)
p. 6.5-4 (Rev. 18A)
p. 6.5-5 (Rev. 18A)
p. 6.5-6 (Rev. 18A)
p. 6.5-7 (Rev. 18A)
p. 6.5-8 (Rev. 18A)
p. 6.5-9 (Rev. 18A)
p. 6.5-10 (Rev. 18A)
p. 6.5-11 (Rev. 18A)
p. 6.5-12 (Rev. 18A)
p. 6.5-13 (Rev. 18A)
p. 6.5-14 (Rev. 18A)
p. 6.5-15 (Rev. 18A)
p. 6.5-16 (Rev. 18A)
p. 6.5-17 (Rev. 18A)
p. 6.5-18 (Rev. 18A)
p. 6.5-19 (Rev. 18A)
p. 6.5-20 (Rev. 18A)
p. 6.5-21 (Rev. 18A)
p. 6.5-22 (Rev. 18A)
p. 6.5-23 (Rev. 18A)
p. 6.5-24 (Rev. 18A)
p. 6.5-25 (Rev. 18A)
p. 6.5-26 (Rev. 18A)
t. 6.5-1 (Rev. 18A)
t. 6.5-2 (Rev. 18A)
t. 6.5-3 (Rev. 18A)
t. 6.5-4 (Sheet 1) (Rev. 18A)
t. 6.5-4 (Sheet 2) (Rev. 18A)
t. 6.5-5 (Rev. 18A)
f. 6.5-1 (Rev. 0)
f. 6.5-2 (Rev 18A)
f. 6.5-3 (Rev 18A)
p. 6.6-1 (Rev. 18A)
p. 6.6-2 (Rev. 18A)
p. 6.6-3 (Rev. 18A)
p. i (chapter 7) (Rev. 15A)
p. ii (chapter 7) (Rev. 18A)
p. iii (chapter 7) (Rev. 18A)
p. iv (chapter 7) (Rev. 18A)
p. v (chapter 7) (Rev. 18A)
p. vi (chapter 7) (Rev. 18A)
p. vii (chapter 7) (Rev. 18A)
p. viii (chapter 7) (Rev. 18A)
p. ix (chapter 7) (Rev. 18A)
p. x (chapter 7) (Rev. 12B)
p. xi (chapter 7) (Rev. 18A)
p. xii (chapter 7) (Rev. 18A)
p. xiii (chapter 7) (Rev. 17A)
p. xiv (chapter 7) (Rev. 9A)
p. 7.1-1 (Rev. 18A)
p. 7.1-2 (Rev. 10A)
p. 7.1-3 (Rev. 3)
p. 7.1-4 (Rev. 3)
p. 7.1-5 (Rev. 3)
p. 7.1-6 (Rev. 18A)
p. 7.1-7 (Rev. 18A)
p. 7.1-8 (Rev. 12C)
p. 7.1-9 (Rev. 18A)
p. 7.1-10 (Rev. 3)
p. 7.1-11 (Rev. 3)
t. 7.1-1 (Rev. 3)
t. 7.1-2 (Rev. 0)
f. 7.1-1 (Rev. 0)
f. 7.1-2 (Rev. 7)
f. 7.1-3 (Rev. 12B)
p. 7.2-1 (Rev. 18A)
p. 7.2-2 (Rev. 0)
p. 7.2-3 (Rev. 3)
p. 7.2-4 (Rev. 0)
p. 7.2-5 (Rev. 4)
p. 7.2-6 (Rev. 4)
p. 7.2-6a (Rev. 4)
p. 7.2-6b (Rev. 4)
p. 7.2-7 (Rev. 18A)
p. 7.2-8 (Rev. 18A)
p. 7.2-9 (Rev. 18A)
p. 7.2-10 (Rev. 18A)
p. 7.2-11 (Rev. 18A)
p. 7.2-12 (Rev. 16)
p. 7.2-13 (Rev. 18A)
p. 7.2-14 (Rev. 13D)
p. 7.2-15 (Rev. 16)
p. 7.2-16 (Rev. 16)

p. 7.2-16a (Rev. 3)
p. 7.2-16b (Rev. 3)
p. 7.2-17 (Rev. 0)
p. 7.2-18 (Rev. 3)
p. 7.2-19 (Rev. 18A)
p. 7.2-20 (Rev. 18A)
p. 7.2-21 (Rev. 18A)
p. 7.2-22 (Rev. 3)
p. 7.2-23 (Rev. 4)
p. 7.2-24 (Rev. 0)
p. 7.2-25 (Rev. 0)
t. 7.2-1 (Rev. 17A)
t. 7.2-2 (Rev. 16)
t. 7.2-3 (Rev. 16)
f. 7.2-1 (sheet 1) (Rev. 17B)
f. 7.2-1 (sheet 2) (Rev. 17B)
f. 7.2-1 (sheet 3) (Rev. 17B)
f. 7.2-1 (sheet 4) (Rev. 5)
f. 7.2-2 (Rev. 3)
f. 7.2-3 (Rev. 0)
f. 7.2-4 (Rev. 17A)
f. 7.2-5 (sheet 1) (Rev. 15B)
f. 7.2-5 (sheet 2) (Rev. 4)
f. 7.2-6 (Rev. 0)
f. 7.2-7 (Rev. 0)
f. 7.2-9 (Rev. 18A)
p. 7.3-1 (Rev. 0)
p. 7.3-2 (Rev. 0)
p. 7.3-3 (Rev. 3)
p. 7.3-4 (Rev. 0)
p. 7.3-5 (Rev. 3)
p. 7.3-6 (Rev. 0)
p. 7.3-7 (Rev. 0)
p. 7.3-8 (Rev. 13D)
p. 7.3-9 (Rev. 5)
p. 7.3-10 (Rev. 14D)
p. 7.3-11 (Rev. 14D)
p. 7.3-12 (Rev. 18A)
p. 7.3-13 (Rev. 5)
p. 7.3-14 (Rev. 18A)
p. 7.3-15 (Rev. 18A)
p. 7.3-16 (Rev. 18A)
p. 7.3-17 (Rev. 18A)
p. 7.3-18 (Rev. 18A)
p. 7.3-19 (Rev. 18A)
p. 7.3-20 (Rev. 14D)
p. 7.3-21 (Rev. 14D)
p. 7.3-22 (Rev. 14D)
p. 7.3-23 (Rev. 14D)
p. 7.3-24 (Rev. 14D)
p. 7.3-25 (Rev. 14D)
p. 7.3-26 (Rev. 14D)
p. 7.3-27 (Rev. 14D)
p. 7.3-28 (Rev. 14D)
p. 7.3-29 (Rev. 14D)
p. 7.3-29a (Rev. 14D)
p. 7.3-29b (Rev. 14D)
p. 7.3-29c (Rev. 14D)
p. 7.3-29d (Rev. 5)
p. 7.3-30 (Rev. 3)
p. 7.3-31 (Rev. 18A)
p. 7.3-32 (Rev. 18A)
p. 7.3-33 (Rev. 10A)
p. 7.3-34 (Rev. 10A)
t. 7.3-1 (sheet 1) (Rev. 14D)
t. 7.3-1 (sheet 2) (Rev. 17B)
t. 7.3-1 (sheet 3) (Rev. 17B)
t. 7.3-1 (sheet 4) (Rev. 17B)
t. 7.3-1 (sheet 5) (Rev. 14D)
t. 7.3-1 (sheet 6) (Rev. 17B)
t. 7.3-1 (sheet 7) (Rev. 14D)
t. 7.3-1 (sheet 8) (Rev. 14D)
t. 7.3-1 (sheet 9) (Rev. 17B)
t. 7.3-1 (sheet 10) (Rev. 14D)
t. 7.3-1 (sheet 11) (Rev. 17B)
t. 7.3-1 (sheet 12) (Rev. 14D)
t. 7.3-1 (sheet 13) (Rev. 14D)
t. 7.3-1 (sheet 14) (Rev. 14D)
t. 7.3-1 (sheet 15) (Rev. 14D)
t. 7.3-1 (sheet 16) (Rev. 14D)
t. 7.3-1 (sheet 17) (Rev. 14D)
t. 7.3-1 (sheet 18) (Rev. 14D)
t. 7.3-1 (sheet 19) (Rev. 14D)
t. 7.3-1 (sheet 20) (Rev. 14D)
t. 7.3-1 (sheet 21) (Rev. 14D)
t. 7.3-1 (sheet 22) (Rev. 14D)
t. 7.3-1 (sheet 23) (Rev. 14D)
t. 7.3-1 (sheet 24) (Rev. 15B)
t. 7.3-1 (sheet 25) (Rev. 17B)
t. 7.3-1 (sheet 26) (Rev. 14D)
t. 7.3-1 (sheet 27) (Rev. 14D)
t. 7.3-1 (sheet 28) (Rev. 14D)
t. 7.3-1 (sheet 29) (Rev. 14D)
t. 7.3-1 (sheet 30) (Rev. 14D)
t. 7.3-1 (sheet 31) (Rev. 17B)
t. 7.3-1 (sheet 32) (Rev. 14D)
t. 7.3-1 (sheet 33) (Rev. 18A)
t. 7.3-1 (sheet 34) (Rev. 16)
t. 7.3-1 (sheet 35) (Rev. 14D)
t. 7.3-1 (sheet 36) (Rev. 14D)
t. 7.3-1 (sheet 37) (Rev. 17B)
t. 7.3-2 (sheet 1) (Rev. 17A)
t. 7.3-2 (sheet 2) (Rev. 17A)
t. 7.3-2 (sheet 3) (Rev. 17A)

t. 7.3-2 (sheet 4) (Rev. 17A)
f. 7.3-1 (sheet 1) (Rev. 17B)
f. 7.3-1 (sheet 2) (Rev. 17B)
f. 7.3-1 (sheet 3) (Rev. 17A)
f. 7.3-2 (Rev. 4)
f. 7.3-3 (Rev. 0)
f. 7.3-4 (Rev. 7)
f. 7.3-5 (sheet 1) (Rev. 13D)
f. 7.3-5 (sheet 2) (Rev. 17A)
f. 7.3-5 (sheet 3) (Rev. 6)
f. 7.3-5 (sheet 4) (Rev. 17A)
f. 7.3-5 (sheet 5) (Rev. 17A)
f. 7.3-5 (sheet 6) (Rev. 17A)
f. 7.3-5 (sheet 7) (Rev. 6)
f. 7.3-5 (sheet 8) (Rev. 5)
f. 7.3-5 (sheet 9) (Rev. 17A)
f. 7.3-5 (sheet 10) (Rev. 17A)
f. 7.3-5 (sheet 11) (Rev. 17A)
f. 7.3-5 (sheet 12) (Rev. 13D)
f. 7.3-6 (Rev. 4)
f. 7.3-7 (Rev. 4)
f. 7.3-8 (Rev. 4)
f. 7.3-9 (Rev. 11C)
f. 7.3-10 (Rev. 4)
p. 7.4-1 (Rev. 18A)
p. 7.4-2 (Rev. 18B)
p. 7.4-3 (Rev. 18A)
p. 7.4-4 (Rev. 12D)
p. 7.4-5 (Rev. 13D)
p. 7.4-6 (Rev. 17A)
p. 7.4-7 (Rev. 13D)
p. 7.4-8 (Rev. 17A)
p. 7.4-9 (Rev. 14C)
p. 7.4-9a (Rev. 13D)
p. 7.4-9b (Rev. 4)
p. 7.4-10 (Rev. 11D)
p. 7.4-11 (Rev. 17A)
p. 7.4-12 (Rev. 18A)
p. 7.4-13 (Rev. 18A)
p. 7.4-13a (Rev. 18A)
p. 7.4-13b (Rev. 4)
p. 7.4-14 (Rev. 6)
p. 7.4-15 (Rev. 15A)
p. 7.4-16 (Rev. 4)
p. 7.4-17 (Rev. 13A)
p. 7.4-17a (Rev. 15B)
p. 7.4-17b (Rev. 13A)
p. 7.4-18 (Rev. 15B)
p. 7.4-19 (Rev. 12A)
p. 7.4-20 (Rev. 3)
p. 7.4-21 (Rev. 18A)
p. 7.4-22 (Rev. 18A)
p. 7.4-23 (Rev. 18A)
p. 7.4-24 (Rev. 4)
p. 7.4-25 (Rev. 18A)
p. 7.4-26 (Rev. 18A)
p. 7.4-27 (Rev. 18A)
p. 7.4-28 (Rev. 18A)
p. 7.4-29 (Rev. 18A)
t. 7.4-1 (sheet 1) (Rev. 17A)
t. 7.4-1 (sheet 2) (Rev. 17A)
t. 7.4-2 (Rev. 17A)
t. 7.4-3 (Rev. 17A)
t. 7.4-4 (Rev. 17A)
t. 7.4-5 (Rev. 1)
f. 7.4-1 (Rev. 18A)
f. 7.4-2 (sheet 1) (Rev. 17B)
f. 7.4-2 (sheet 2) (Rev. 18A)
f. 7.4-3 (sheet 1) (Rev. 5)
f. 7.4-3 (sheet 2) (Rev. 17B)
f. 7.4-3 (sheet 3) (Rev. 17A)
f. 7.4-3 (sheet 4) (Rev. 13D)
f. 7.4-3 (sheet 5) (Rev. 6)
f. 7.4-3 (sheet 6) (Rev. 12B)
f. 7.4-3 (sheet 7) (Rev. 13D)
f. 7.4-3 (sheet 8) (Rev. 15B)
f. 7.4-4 (Rev. 18A)
f. 7.4-5 (Rev. 17B)
f. 7.4-6 (sheet 1) (Rev. 15A)
f. 7.4-6 (sheet 2) (Rev. 15A)
f. 7.4-6 (sheet 3) (Rev. 9B)
f. 7.4-7 (sheet 1) (Rev. 18A)
f. 7.4-7 (sheet 2) (Rev. 17B)
f. 7.4-8 (sheet 1) (Rev. 15B)
f. 7.4-8 (sheet 2) (Rev. 6)
f. 7.4-8 (sheet 3) (Rev. 15B)
f. 7.4-8 (sheet 4) (Rev. 15B)
f. 7.4-8 (sheet 5) (Rev. 18A)
f. 7.4-8 (sheet 6) (Rev. 17A)
f. 7.4-8 (sheet 7) (Rev. 15B)
f. 7.4-9 (sheet 1) (Rev. 18A)
f. 7.4-9 (sheet 2) (Rev. 4)
f. 7.4-9 (sheet 3) (Rev. 6)
f. 7.4-9 (sheet 4) (Rev. 18A)
f. 7.4-9 (sheet 5) (Rev. 6)
p. 7.5-1 (Rev. 16)
p. 7.5-2 (Rev. 16)
p. 7.5-3 (Rev. 16)
p. 7.5-4 (Rev. 16)
p. 7.5-5 (Rev. 16)
p. 7.5-6 (Rev. 18A)
p. 7.5-7 (Rev. 16)
p. 7.5-8 (Rev. 16)
p. 7.5-9 (Rev. 17A)

p. 7.5-10 (Rev. 16)
p. 7.5-11 (Rev. 17A)
p. 7.5-12 (Rev. 16)
p. 7.5-13 (Rev. 17A)
p. 7.5-14 (Rev. 17A)
p. 7.5-15 (Rev. 16)
p. 7.5-16 (Rev. 18A)
p. 7.5-17 (Rev. 17A)
p. 7.5-18 (Rev. 16)
p. 7.5-19 (Rev. 18A)
p. 7.5-20 (Rev. 16)
p. 7.5-21 (Rev. 16)
p. 7.5-22 (Rev. 16)
p. 7.5-23 (Rev. 17A)
p. 7.5-24 (Rev. 16)
p. 7.5-25 (Rev. 16)
p. 7.5-26 (Rev. 16)
p. 7.5-27 (Rev. 16)
p. 7.5-28 (Rev. 16)
p. 7.5-29 (Rev. 16)
p. 7.5-30 (Rev. 17A)
p. 7.5-31 (Rev. 16)
p. 7.5-32 (Rev. 16)
p. 7.5-33 (Rev. 16)
p. 7.5-34 (Rev. 16)
t. 7.5-1 (Rev. 11C)
t. 7.5-2 (Rev. 0)
t. 7.5-3 (Rev. 16)
t. 7.5-4 (Rev. 18A)
f. 7.5-1 (sheet 1) (Rev. 17A)
f. 7.5-1 (sheet 2) (Rev. 17A)
f. 7.5-2 (Rev. 7)
f. 7.5-3 (Rev. 0)
f. 7.5-4 (Rev. 0)
f. 7.5-5 (Rev. 0)
f. 7.5-6 (Rev. 0)
f. 7.5-7 (Rev. 0)
f. 7.5-8 (Rev. 0)
f. 7.5-9 (Rev. 7)
f. 7.5-10 (sheet 1) (Rev. 16)
f. 7.5-10 (sheet 2) (Rev. 16)
f. 7.5-10 (sheet 3) (Rev. 16)
f. 7.5-10 (sheet 4) (Rev. 16)
f. 7.5-10 (sheet 5) (Rev. 16)
f. 7.5-13 (Rev. 0)
f. 7.5-14 (Rev. 0)
f. 7.5-15 (sheet 1) (Rev. 16)
f. 7.5-15 (sheet 2) (Rev. 16)
f. 7.5-16 (Rev. 0)
f. 7.5-17 (Rev. 9C)
f. 7.5-18 (Rev. 0)
f. 7.5-19 (Rev. 1)
f. 7.5-20 (sheet 1) (Rev. 16)
f. 7.5-20 (sheet 2) (Rev. 17A)
f. 7.5-20 (sheet 3) (Rev. 6)
f. 7.5-20 (sheet 4) (Rev. 5)
f. 7.5-20 (sheet 5) (Rev. 16)
f. 7.5-20 (sheet 6) (Rev. 5)
f. 7.5-20 (sheet 7) (Rev. 7)
f. 7.5-20 (sheet 8) (Rev. 7)
f. 7.5-21 (Rev. 3)
p. 7.6-1 (Rev. 0)
p. 7.6-2 (Rev. 17A)
p. 7.6-3 (Rev. 0)
p. 7.6-4 (Rev. 0)
p. 7.6-5 (Rev. 11C)
p. 7.6-6 (Rev. 17A)
t. 7.6-1 (sheet 1) (Rev. 0)
t. 7.6-1 (sheet 2) (Rev. 11C)
p. 7.7-1 (Rev. 0)
p. 7.7-2 (Rev. 18A)
p. 7.7-3 (Rev. 18A)
p. 7.7-4 (Rev. 16)
p. 7.7-5 (Rev. 18A)
p. 7.7-6 (Rev. 18A)
p. 7.7-7 (Rev. 16)
p. 7.7-8 (Rev. 16)
p. 7.7-9 (Rev. 16)
p. 7.7-10 (Rev. 16)
p. 7.7-11 (Rev. 16)
p. 7.7-12 (Rev. 16)
p. 7.7-13 (Rev. 16)
p. 7.7-14 (Rev. 16)
f. 7.7-1 (sheet 1) (Rev. 6)
f. 7.7-1 (sheet 2) (Rev. 16)
f. 7.7-1 (sheet 3) (Rev. 15B)
f. 7.7-1 (sheet 4) (Rev. 15B)
f. 7.7-1 (sheet 5) (Rev. 15B)
f. 7.7-1 (sheet 6) (Rev. 15B)
f. 7.7-1 (sheet 7) (Rev. 15B)
f. 7.7-1 (sheet 8) (Rev. 16)
f. 7.7-1 (sheet 9) (Rev. 6)
f. 7.7-3 (Rev. 16)
p. 7.8-1 (Rev. 18A)
p. 7.8-2 (Rev. 17A)
p. 7.8-3 (Rev. 17A)
p. 7.8-4 (Rev. 15B)
p. 7.8-5 (Rev. 3)
p. 7.8-6 (Rev. 18A)
p. 7.8-7 (Rev. 17A)
p. 7.8-8 (Rev. 11B)
p. 7.8-9 (Rev. 18A)
p. 7.8-10 (Rev. 18A)
t. 7.8-1 (sheet 1) (Rev. 15B)

t. 7.8-1 (sheet 2) (Rev. 15B)
t. 7.8-1 (sheet 3) (Rev. 18A)
p. 7.9-1 (Rev. 18A)
p. 7.9-2 (Rev. 17B)
p. 7.9-3 (Rev. 17B)
p. 7.9-4 (Rev. 17B)
p. 7.9-5 (Rev. 18A)
f. 7.9-1 (Rev. 12C)
p. 7.10-1 (Rev. 17B)
p. 7.10-2 (Rev. 17B)
p. 7.10-3 (Rev. 17B)
p. 7.10-4 (Rev. 17B)
p. 7.10-5 (Rev. 17B)
p. 7.10-6 (Rev. 17B)
f. 7.10-1 (Rev. 17B)
p. 7.11-1 (Rev. 18A)
p. 7.11-2 (Rev. 12C)
p. 7.11-3 (Rev. 18A)
p. 7.11-4 (Rev. 18A)
p. 7.11-5 (Rev. 18A)
p. 7.11-6 (Rev. 18A)
p. 7.11-7 (Rev. 18A)
f. 7.11-1 (Rev. 12C)
f. 7.11-2 (Rev. 12C)
p. 7.12-1 (Rev. 17A)
p. 7.12-2 (Rev. 18A)
p. 7.12-3 (Rev. 18A)
p. 7.12-4 (Rev. 18A)
p. 7.12-5 (Rev. 18A)
p. 7.12-6 (Rev. 18A)
p. 7.12-7 (Rev. 18A)
p. 7.12-8 (Rev. 18A)
p. 7.12-9 (Rev. 18A)
p. 7.12-10 (Rev. 18A)
p. 7.12-11 (Rev. 18A)
p. 7.12-12 (Rev. 18A)
t. 7.12-1 (sheet 1) (Rev. 8)
t. 7.12-1 (sheet 2) (Rev. 5)
t. 7.12-2 (Rev. 8)
p. 7.13-1 (Rev. 15B)
p. 7.13-2 (Rev. 16)
p. 7.13-3 (Rev. 16)
p. 7.13-4 (Rev. 15B)
t. 7.13-1 (Rev. 1)
f. 7.13-1 (Rev. 15B)
p. 7.14-1 (Rev. 12B)
p. 7.15-1 (Rev 18A)
p. 7.16-1 (Rev. 18A)
p. 7.16-2 (Rev. 18A)
p. 7.16-2a (Rev. 17A)
p. 7.16-2b (Rev. 5)
p. 7.16-3 (Rev. 3)
p. 7.16-4 (Rev. 3)
p. 7.16-5 (Rev. 17A)
p. 7.16-6 (Rev. 17A)
p. 7.16-7 (Rev. 17A)
t. 7.16-1 (Rev. 17A)
t. 7.16-2 (Rev. 5)
t. 7.16-3 (Rev. 17A)
t. 7.16-4 (sheet 1) (Rev. 17A)
t. 7.16-4 (sheet 2) (Rev. 17A)
t. 7.16-4 (sheet 3) (Rev. 17A)
t. 7.16-4 (sheet 4) (Rev. 17A)
t. 7.16-5 (Rev. 4)
t. 7.16-6 (sheet 1) (Rev. 4)
t. 7.16-6 (sheet 2) (Rev. 4)
t. 7.16-7 (sheet 1) (Rev. 18A)
t. 7.16-7 (sheet 2) (Rev. 18A)
f. 7.16-1 (Rev. 0)
f. 7.16-2 (Rev. 18A)
p. 7.17-1 (Rev. 0)
p. 7.18-1 (Rev. 17A)
p. 7.18-2 (Rev. 17A)
p. 7.18-3 (Rev. 17A)
p. 7.18-4 (Rev. 17A)
p. 7.18-5 (Rev. 17A)
p. 7.18-6 (Rev. 17A)
p. 7.18-7 (Rev. 17A)
p. 7.18-8 (Rev. 3)
t. 7.18-1 (sheet 1) (Rev. 17A)
t. 7.18-1 (sheet 2) (Rev. 17A)
t. 7.18-1 (sheet 3) (Rev. 17A)
t. 7.18-1 (sheet 4) (Rev. 17A)
t. 7.18-1 (sheet 5) (Rev. 17A)
t. 7.18-1 (sheet 6) (Rev. 17A)
f. 7.18-1 (Rev. 17A)
p. 7.19-1 (Rev. 17A)
p. 7.19-2 (Rev. 3)
p. 7.19-3 (Rev. 3)
p. 7.19-4 (Rev. 12B)
p. 7.19-5 (Rev. 3)
p. 7.19-6 (Rev. 3)
p. 7.19-7 (Rev. 3)
f. 7.19-1 (Rev. 3)
f. 7.19-2 (Rev. 17A)
f. 7.19-3 (Rev. 17A)
p. 7.20-1 (Rev. 3)
p. 7.21-1 (Rev. 18A)
p. 7.21-2 (Rev. 18A)
p. 7.21-3 (Rev. 12D)
p. 7.21-4 (Rev. 12D)
p. 7.21-5 (Rev. 13C)
p. 7.21-6 (Rev. 12D)
f. 7.21-1 (Rev. 13D)

p. 7.22-1 (Rev. 9B)
p. 7.22-2 (Rev. 16)
p. 7.22-3 (Rev. 18A)
p. 7.22-4 (Rev. 15A)
p. 7.22-5 (Rev. 15A)
p. 7.23-1 (Rev. 15A)
p. 7.24-1 (Rev. 9C)
p. 7.24-2 (Rev. 9C)
p. 7.24-3 (Rev. 9C)
p. 7.24-4 (Rev. 9C)
p. 7.24-5 (Rev. 9C)
p. 7.24-6 (Rev. 9C)
p. 7.24-7 (Rev. 9C)
p. 7.24-8 (Rev. 9C)
p. 7.24-9 (Rev. 9C)
p. 7.24-10 (Rev. 17A)
p. 7.24-11 (Rev. 17A)
p. 7.24-12 (Rev. 17A)
t. 7.24-1 (sheet 1) (Rev. 17A)
t. 7.24-1 (sheet 2) (Rev. 17A)
t. 7.24-1 (sheet 3) (Rev. 17A)
t. 7.24-1 (sheet 4) (Rev. 17A)
t. 7.24-1 (sheet 5) (Rev. 9C)
t. 7.24-1 (sheet 6) (Rev. 9C)
t. 7.24-1 (sheet 7) (Rev. 15B)
t. 7.24-1 (sheet 8) (Rev. 17A)
t. 7.24-1 (sheet 9) (Rev. 17A)
t. 7.24-1 (sheet 10) (Rev. 17A)
t. 7.24-1 (sheet 11) (Rev. 17A)
t. 7.24-1 (sheet 12) (Rev. 15A)
t. 7.24-1 (sheet 13) (Rev. 17B)
t. 7.24-1 (sheet 14) (Rev. 17A)
t. 7.24-1 (sheet 15) (Rev. 17A)
t. 7.24-1 (sheet 16) (Rev. 17A)
t. 7.24-1 (sheet 17) (Rev. 17A)
t. 7.24-1 (sheet 18) (Rev. 9C)
t. 7.24-1 (sheet 19) (Rev. 9C)
t. 7.24-1 (sheet 20) (Rev. 16)
t. 7.24-1 (sheet 21) (Rev. 17A)
p. i (chapter 8) (Rev. 14B)
p. ii (chapter 8) (Rev. 14B)
p. iii (chapter 8) (Rev. 14B)
p. iv (chapter 8) (Rev. 11A)
p. 8.1-1 (Rev. 0)
p. 8.2-1 (Rev. 0)
p. 8.3-1 (Rev. 18A)
p. 8.3-2 (Rev. 18A)
p. 8.3-3 (Rev. 2)
p. 8.3-4 (Rev. 15A)
p. 8.3-5 (Rev. 18A)
p. 8.3-6 (Rev. 15A)
p. 8.3-7 (Rev. 15A)
t. 8.3-1 (sheet 1) (Rev. 15A)
t. 8.3-1 (sheet 2) (Rev. 15A)
t. 8.3-2 (sheet 1) (Rev. 1)
t. 8.3-2 (sheet 2) (Rev. 16)
f. 8.3-1 (Rev. 4)
f. 8.3-2 (Rev. 10A)
p. 8.4-1 (Rev. 18A)
p. 8.4-2 (Rev. 12A)
p. 8.4-2a (Rev. 10C)
p. 8.4-2b (Rev. 10C)
p. 8.4-3 (Rev. 11D)
p. 8.4-4 (Rev. 8)
p. 8.4-5 (Rev. 12A)
p. 8.4-6 (Rev. 8)
p. 8.4-7 (Rev. 8)
p. 8.4-8 (Rev. 15B)
p. 8.4-9 (Rev. 15A)
p. 8.4-10 (Rev. 15A)
p. 8.4-11 (Rev. 15A)
p. 8.4-12 (Rev. 15A)
t. 8.4-1 (Rev. 17B)
t. 8.4-2 (Rev. 16)
t. 8.4-3 (Rev. 13D)
t. 8.4-4 (sheet 1) (Rev. 18A)
t. 8.4-4 (sheet 2) (Rev. 18A)
t. 8.4-5 (Rev. 0)
t. 8.4-6 (Rev. 8)
t. 8.4-7 (Rev. 0)
t. 8.4-8 (Rev. 12A)
t. 8.4-9 (Rev. 17B)
t. 8.4-10 (Rev. 17B)
t. 8.4-11 (Rev. 17B)
t. 8.4-12 (Rev. 17B)
t. 8.4-13 (Rev. 17B)
t. 8.4-14 (Rev. 17B)
t. 8.4-15 (Rev. 17B)
f. 8.4-1 (Rev. 6)
f. 8.4-2 (Rev. 1)
f. 8.4-3 (sheet 1) (Rev. 17B)
f. 8.4-3 (sheet 2) (Rev. 17B)
f. 8.4-3 (sheet 3) (Rev. 17B)
f. 8.4-3 (sheet 4) (Rev. 17B)
p. 8.5-1 (Rev. 11A)
p. 8.5-2 (Rev. 16)
p. 8.5-3 (Rev. 16)
p. 8.5-4 (Rev. 12A)
f. 8.5-1 (sheet 1) (Rev. 17B)
f. 8.5-1 (sheet 2) (Rev. 17B)
f. 8.5-2 (sheet 1) (Rev. 18A)
f. 8.5-2 (sheet 2) (Rev. 18A)
f. 8.5-3 (Rev. 17B)
p. 8.6-1 (Rev. 16)

p. 8.6-1a (Rev. 11A)
p. 8.6-1b (Rev. 1)
p. 8.6-2 (Rev. 0)
f. 8.6-1 (Rev. 18A)
p. 8.7-1 (Rev. 7)
p. 8.7-2 (Rev. 16)
f. 8.7-1 (Rev. 9A)
p. 8.8-1 (Rev. 3)
p. 8.8-2 (Rev. 4)
p. 8.8-3 (Rev. 0)
p. 8.8-4 (Rev. 18A)
p. 8.8-5 (Rev. 13D)
p. 8.8-5a (Rev. 13D)
p. 8.8-5b (Rev. 13D)
p. 8.8-6 (Rev. 11B)
p. 8.8-7 (Rev. 18A)
p. 8.8-8 (Rev. 11B)
p. 8.8-9 (Rev. 12B)
p. 8.8-10 (Rev. 12B)
p. 8.8-11 (Rev. 12B)
p. 8.8-12 (Rev. 12B)
p. 8.8-13 (Rev. 16)
p. 8.8-14 (Rev. 17A)
p. 8.8-15 (Rev. 16)
t. 8.8-1 (Rev. 0)
t. 8.8-2 (Rev. 4)
f. 8.8-1 (Rev. 0)
p. 8.9-1 (Rev. 18A)
p. 8.10-1 (Rev. 5)
p. 8.10-2 (Rev. 0)
p. 8.11-1 (Rev. 12C)
p. i (chapter 9) (Rev. 14D)
p. ii (chapter 9) (Rev. 14D)
p. iii (chapter 9) (Rev. 0)
p. iv (chapter 9) (Rev. 9A)
p. 9.1-1 (Rev. 16)
p. 9.1-2 (Rev. 0)
p. 9.2-1 (Rev. 12A)
p. 9.2-2 (Rev. 17A)
p. 9.2-3 (Rev. 16)
t. 9.2-1 (Rev. 12A)
t. 9.2-2 (sheet 1) (Rev. 12A)
t. 9.2-2 (sheet 2) (Rev. 12A)
t. 9.2-2 (sheet 3) (Rev. 12A
t. 9.2-2 (sheet 4) (Rev. 12A)
f. 9.2-1 (sheet 1) (Rev. 12A)
f. 9.2-1 (sheet 2) (Rev. 12A)
f. 9.2-2 (sheet 1) (Rev. 18A)
f. 9.2-2 (sheet 2) (Rev. 18A)
f. 9.2-2 (sheet 3) (Rev. 18A)
f. 9.2-2 (sheet 4) (Rev. 18A)
f. 9.2-2 (sheet 5) (Rev. 18A)
f. 9.2-2 (sheet 6) (Rev. 18A)
f. 9.2-2 (sheet 7) (Rev. 12A)
f. 9.2-3 (Rev 12A)
p. 9.3-1 (Rev. 14D)
p. 9.3-2 (Rev. 17A)
p. 9.3-3 (Rev. 14D)
p. 9.4-1 (Rev. 12D)
p. 9.4-2 (Rev. 1)
p. 9.4-2a (Rev. 12D)
p. 9.4-2b (Rev. 1)
p. 9.4-3 (Rev. 16)
p. 9.4-4 (Rev. 12D)
p. 9.4-5 (Rev. 16)
p. 9.4-6 (Rev. 0)
p. 9.4-7 (Rev. 0)
p. 9.4-8 (Rev. 0)
p. 9.4-9 (Rev. 15B)
p. 9.4-10 (Rev. 15B)
p. 9.4-11 (Rev. 18A)
p. 9.4-12 (Rev. 18A)
t. 9.4-1 (Rev. 12D)
t. 9.4-2 (sheet 1) (Rev. 0)
t. 9.4-2 (sheet 2) (Rev. 4)
t. 9.4-3 (sheet 1) (Rev. 12A)
t. 9.4-3 (sheet 2) (Rev. 12A)
t. 9.4-4 (sheet 1) (Rev. 0)
t. 9.4-4 (sheet 2) (Rev. 11D)
t. 9.4-4 (sheet 3) (Rev. 0)
t. 9.4-5 (sheet 1) (Rev. 0)
t. 9.4-5 (sheet 2) (Rev. 0)
t. 9.4-5 (sheet 3) (Rev. 0)
t. 9.4-5 (sheet 4) (Rev. 4)
t. 9.4-5 (sheet 5) (Rev. 4)
t. 9.4-5 (sheet 6) (Rev. 4)
t. 9.4-6 (Rev. 4)
t. 9.4-7 (Rev. 4)
t. 9.4-8 (Rev. 1)
t. 9.4-9 (Rev. 1)
f. 9.4-1 (Rev. 17B)
p. i (chapter 10) (Rev. 18A)
p. ii (chapter 10) (Rev. 18A)
p. iii (chapter 10) (Rev. 18A)
p. iv (chapter 10) (Rev. 18A)
p. v (chapter 10) (Rev. 18A)
p. vi (chapter 10) (Rev. 11D)
p. vii (chapter 10) (Rev. 11D)
p. 10.1-1 (Rev. 0)
p. 10.2-1 (Rev. 17A)
p. 10.2-2 (Rev. 15B)
p. 10.2-3 (Rev. 15B)
p. 10.3-1 (Rev. 18A)
p. 10.3-2 (Rev. 18A)

p. 10.3-2a (Rev. 15B)
p. 10.3-2b (Rev. 15B)
p. 10.3-3 (Rev. 17A)
p. 10.3-4 (Rev. 18A)
p. 10.3-5 (Rev. 14C)
p. 10.3-6 (Rev. 14C)
p. 10.3-7 (Rev. 18A)
p. 10.3-8 (Rev. 18A)
p. 10.3-9 (Rev. 18A)
p. 10.3-10 (Rev. 18A)
t. 10.3-1 (Rev. 13D)
t. 10.3-2 (Rev. 1)
f. 10.3-1 (Rev. 0)
p. 10.4-1 (Rev. 16)
p. 10.4-2 (Rev. 16)
p. 10.4-3 (Rev. 16)
p. 10.4-4 (Rev. 17A)
p. 10.4-5 (Rev. 17A)
p. 10.4-6 (Rev. 18A)
p. 10.4-7 (Rev. 18A)
p. 10.4-8 (Rev. 18A)
p. 10.4-9 (Rev. 18A)
t. 10.4-1 (sheet 1) (Rev. 0)
t. 10.4-1 (sheet 2) (Rev. 0)
f. 10.4-1 (Rev. 17A)
f. 10.4-2 (Rev. 17A)
p. 10.5-1 (Rev. 0)
p. 10.5-2 (Rev. 0)
p. 10.5-3 (Rev. 18A)
t. 10.5-1 (Rev. 0)
f. 10.5-1 (Rev. 18A)
p. 10.6-1 (Rev. 0)
p. 10.6-2 (Rev. 17A)
p. 10.6-3 (Rev. 17A)
t. 10.6-1 (Rev. 5)
f. 10.6-1 (Rev. 18A)
f. 10.6-2 (Rev. 0)
p. 10.7-1 (Rev. 17A)
p. 10.7-2 (Rev. 17A)
p. 10.7-3 (Rev. 16)
p. 10.7-4 (Rev. 16)
p. 10.7-5 (Rev. 17B)
p. 10.7-6 (Rev. 17A)
p. 10.7-7 (Rev. 18A)
p. 10.7-8 (Rev. 16)
t. 10.7-1 (Rev. 16)
t. 10.7-2 (sheet 1) (Rev. 17A)
t. 10.7-2 (sheet 2) (Rev. 15A)
t. 10.7-2 (sheet 3) (Rev. 15A)
t. 10.7-2 (sheet 4) (Rev. 15A)
t. 10.7-2 (sheet 5) (Rev. 16)
t. 10.7-2 (sheet 6) (Rev. 15A)
t. 10.7-2 (sheet 7) (Rev. 15A)
t. 10.7-2 (sheet 8) (Rev. 15A)
t. 10.7-2 (sheet 9) (Rev. 15A)
f. 10.7-1 (sheet 1) (Rev. 18A)
f. 10.7-1 (sheet 2) (Rev. 17B)
f. 10.7-1 (sheet 3) (Rev. 17B)
f. 10.7-1 (sheet 4) (Rev. 18A)
f. 10.7-1 (sheet 5) (Rev. 17B)
f. 10.7-1 (sheet 6) (Rev. 18A)
f. 10.7-1 (sheet 7) (Rev. 18A)
f. 10.7-2 (Rev. 11C)
f. 10.7-3 (sheet 1) (Rev. 17B)
f. 10.7-3 (sheet 2) (Rev. 17B)
p. 10.8-1 (Rev. 5)
p. 10.9-1 (Rev. 1)
p. 10.9-2 (Rev. 1)
p. 10.9-3 (Rev. 17A)
p. 10.9-4 (Rev. 17A)
p. 10.9-5 (Rev. 17A)
p. 10.9-6 (Rev. 17B)
p. 10.9-7 (Rev. 17B)
p. 10.9-8 (Rev. 17A)
p. 10.9-9 (Rev. 17A)
P. 10.9-10 (Rev. 17A)
f. 10.9-1 (Rev. 18A)
f. 10.9-2 (Rev. 18A)
f. 10.9-3 (Rev. 18A)
f. 10.9-4 (sheet 1) (Rev. 17B)
f. 10.9-4 (sheet 2) (Rev. 18A)
f. 10.9-5 (Rev. 14B)
f. 10.9-6 (Rev. 7)
p. 10.10-1 (Rev. 0)
p. 10.11-1 (Rev. 9C)
p. 10.11-2 (Rev. 16)
p. 10.11-3 (Rev. 12A)
p. 10.11-4 (Rev. 16)
p. 10.11-5 (Rev. 16)
p. 10.11-6 (Rev. 9C)
p. 10.11-7 (Rev. 9C)
p. 10.11-8 (Rev. 9C)
t. 10.11-1 (sheet 1) (Rev. 0)
t. 10.11-1 (sheet 2) (Rev. 12A)
f. 10.11-1 (sheet 1) (Rev. 17A)
f. 10.11-1 (sheet 2) (Rev. 17B)
f. 10.11-2 (Rev. 18A)
f. 10.11-3 (sheet 1) (Rev. 18A)
f. 10.11-3 (sheet 2) (Rev. 18A)
p. 10.12-1 (Rev. 0)
p. 10.13-1 (Rev. 16)
p. 10.13-2 (Rev. 16)
p. 10.13-3 (Rev. 16)
p. 10.14-1 (Rev. 0)

t. 10.14-1 (sheet 1) (Rev. 10C)
t. 10.14-1 (sheet 2) (Rev. 4)
t. 10.14-1 (sheet 3) (Rev. 4)
p. 10.15-1 (Rev. 0)
p. 10.16-1 (Rev. 0)
p. 10.17-1 (Rev. 0)
p. 10.18-1 (Rev. 18A)
p. 10.18-2 (Rev. 17A)
f. 10.18-1 (Rev. 17B)
p. 10.19-1 (Rev. 9A)
p. 10.19-2 (Rev. 14A)
p. 10.19-3 (Rev. 10A)
p. 10.19-4 (Rev. 18A)
p. 10.19-5 (Rev. 10A)
p. 10.19-6 (Rev. 10A)
p. 10.19-7 (Rev. 16)
p. 10.19-8 (Rev. 10A)
p. 10.19-9 (Rev. 10A)
f. 10.19-1 (sheet 1) (Rev. 17B)
f. 10.19-1 (sheet 2) (Rev. 17A)
p. 10.20-1 (Rev. 18A)
p. 10.20-2 (Rev. 16)
p. 10.20-2a (Rev. 16)
p. 10.20-2b (Rev. 3)
p. 10.20-3 (Rev. 8)
p. 10.20-4 (Rev. 18A)
p. 10.20-5 (Rev. 12A)
p. 10.20-6 (Rev. 12A)
p. 10.20-7 (Rev. 18A)
p. 10.20-8 (Rev. 18A)
p. 10.20-9 (Rev. 18A)
p. 10.20-10 (Rev. 18A)
p. 10.20-11 (Rev. 18A)
p. 10.20-12 (Rev. 18A)
p. 10.20-13 (Rev. 18A)
p. 10.20-14 (Rev. 18A)
p. 10.20-15 (Rev. 18A)
t. 10.20-1 (Rev. 0)
t. 10.20-3 (sheet 1) (Rev. 0)
t. 10.20-3 (sheet 2) (Rev. 0)
t. 10.20-4 (Rev. 18A)
f. 10.20-1 (Rev. 0)
f. 10.20-2 (Rev. 0)
f. 10.20-3 (Rev. 0)
f. 10.20-4 (Rev. 0)
f. 10.20-5 (Rev. 0)
f. 10.20-6 (Rev. 0)
f. 10.20-7 (Rev. 17B)
p. 10.21-1 (Rev. 11B)
p. 10.22-1 (Rev. 17A)
p. 10.23-1 (Rev. 18A)
p. i (chapter 11) (Rev. 13B)
p. ii (chapter 11) (Rev. 11B)
p. iii (chapter 11) (Rev. 9A)
p. iv (chapter 11) (Rev. 9A)
p. 11.1-1 (Rev. 18A)
p. 11.1-2 (Rev. 12C)
f. 11.1-1 (sheet 1) (Rev. 18A)
f. 11.1-1 (sheet 2) (Rev. 17B)
f. 11.1-1 (sheet 3) (Rev. 17B)
f. 11.1-2 (sheet 1) (Rev. 13D)
f. 11.1-2 (sheet 2) (Rev. 18A)
f. 11.1-2 (sheet 3) (Rev. 17B)
f. 11.1-2 (sheet 4) (Rev. 17B)
f. 11.1-3 (sheet 1) (Rev. 17A)
f. 11.1-3 (sheet 2) (Rev. 18A)
f. 11.1-3 (sheet 3) (Rev. 17B)
f. 11.1-3 (sheet 4) (Rev. 18A)
f. 11.1-3 (sheet 5) (Rev. 17B)
p. 11.2-1 (Rev. 18A)
p. 11.2-2 (Rev. 18A)
p. 11.2-3 (Rev. 18A)
p. 11.2-4 (Rev. 18A)
p. 11.3-1 (Rev. 18A)
p. 11.3-2 (Rev. 18A)
p. 11.4-1 (Rev. 0)
p. 11.4-2 (Rev. 16)
f. 11.4-1 (sheet 1) (Rev. 17A)
f. 11.4-1 (sheet 2) (Rev. 18A)
f. 11.4-1 (sheet 3) (Rev. 17B)
p. 11.5-1 (Rev. 18A)
p. 11.5-2 (Rev. 18A)
p. 11.6-1 (Rev. 17B)
p. 11.6-2 (Rev. 9B)
p. 11.6-3 (Rev. 9A)
p. 11.6-4 (Rev. 17B)
p. 11.6-5 (Rev. 9A)
p. 11.6-6 (Rev. 11C)
f. 11.6-1 (Rev. 18A)
f. 11.6-2 (Rev. 10C)
f. 11.6-3 (Rev. 4)
p. 11.7-1 (Rev. 16)
p. 11.7-2 (Rev. 6)
p. 11.8-1 (Rev. 18A)
p. 11.8-2 (Rev. 10C)
p. 11.8-3 (Rev. 18A)
p. 11.9-1 (Rev. 1)
p. 11.10-1 (Rev. 11B)
p. 11.10-2 (Rev. 13C)
p. 11.10-3 (Rev. 12C)
p. 11.10-4 (Rev. 15B)
p. 11.10-5 (Rev. 11B)
p. 11.10-6 (Rev. 11B)
p. i (chapter 12) (Rev. 18A)

p. ii (chapter 12) (Rev. 18A)
p. iii (chapter 12) (Rev. 18A)
p. iv (chapter 12) (Rev. 9A)
p. v (chapter 12) (Rev. 9A)
p. vi (chapter 12) (Rev. 9A)
p. 12.1-1 (Rev. 0)
f. 12.1-1 (sheet 1) (Rev. 1)
f. 12.1-1 (sheet 2) (Rev. 10C)
f. 12.1-2 (sheet 1) (Rev. 17A)
f. 12.1-2 (sheet 2) (Rev. 12B)
f. 12.1-3 (Rev. 17A)
f. 12.1-4 (sheet 1) (Rev. 17A)
f. 12.1-4 (sheet 2) (Rev. 17B)
f. 12.1-5 (Rev. 12B)
f. 12.1-6 (Rev. 0)
f. 12.1-7 (Rev. 7)
f. 12.1-8 (Rev. 0)
f. 12.1-9 (Rev. 17A)
f. 12.1-10 (Rev. 11A)
f. 12.1-11 (Rev. 0)
f. 12.1-12 (Rev. 0)
f. 12.1-13 (Rev. 11C)
f. 12.1-14 (Rev. 8)
p. 12.2-1 (Rev. 0)
p. 12.2-2 (Rev. 0)
p. 12.2-3 (Rev. 0)
p. 12.2-4 (Rev. 15B)
p. 12.2-4a (Rev. 13C)
p. 12.2-4b (Rev. 13C)
p. 12.2-5 (Rev. 3)
p. 12.2-6 (Rev. 0)
p. 12.2-7 (Rev. 0)
p. 12.2-8 (Rev. 0)
p. 12.2-9 (Rev. 15B)
p. 12.2-10 (Rev. 15B)
p. 12.2-11 (Rev. 0)
p. 12.2-12 (Rev. 0)
p. 12.2-13 (Rev. 0)
p. 12.2-14 (Rev. 15B)
p. 12.2-15 (Rev. 0)
p. 12.2-16 (Rev. 0)
p. 12.2-17 (Rev. 15B)
p. 12.2-18 (Rev. 0)
f. 12.2-1 (Rev. 0)
f. 12.2-2 (Rev. 12D)
p. 12.3-1 (Rev. 3)
p. 12.3-2 (Rev. 3)
p. 12.3-3 (Rev. 3)
p. 12.3-4 (Rev. 3)
p. 12.3-5 (Rev. 3)
p. 12.3-6 (Rev. 3)
p. 12.3-7 (Rev. 3)
p. 12.3-8 (Rev. 3)
p. 12.3-9 (Rev. 17B)
p. 12.3-10 (Rev. 17B)
p. 12.3-10a (Rev. 3)
p. 12.3-10b (Rev. 1)
p. 12.3-11 (Rev. 18A)
p. 12.3-12 (Rev. 18A)
p. 12.3-13 (Rev. 18A)
p. 12.3-14 (Rev. 18A)
p. 12.3-15 (Rev. 18A)
p. 12.3-16 (Rev. 18A)
t. 12.3-1 (sheet 1) (Rev. 0)
t. 12.3-1 (sheet 2) (Rev. 0)
t. 12.3-1 (sheet 3) (Rev. 0)
t. 12.3-2 (Rev. 3)
t. 12.3-3 (Rev. 0)
f. 12.3-1 (Rev. 0)
f. 12.3-2 (Rev. 3)
f. 12.3-3 (Rev. 3)
p. 12.4-1 (Rev. 0)
p. 12.4-2 (Rev. 0)
p. 12.4-3 (Rev. 0)
p. 12.4-4 (Rev. 0)
p. 12.4-5 (Rev. 7)
p. 12.4-6 (Rev. 7)
p. 12.4-7 (Rev. 7)
f. 12.4-1 (sheet 1) (Rev. 0)
f. 12.4-1 (sheet 2) (Rev. 0)
p. 12.5-1 (Rev. 2)
p. 12.6-1 (Rev. 15B)
p. 12.6-2 (Rev. 3)
p. 12.6-3 (Rev. 3)
p. 12.6-4 (Rev. 3)
p. 12.6-5 (Rev. 3)
p. 12.6-6 (Rev. 3)
p. 12.6-7 (Rev. 3)
p. 12.6-8 (Rev. 3)
p. 12.6-9 (Rev. 3)
p. 12.6-10 (Rev. 3)
p. 12.6-11 (Rev. 13C)
p. 12.6-12 (Rev. 3)
t. 12.6-1 (Rev. 3)
t. 12.6-2 (Rev. 2)
t. 12.6-3 (sheet 1) (Rev. 3)
t. 12.6-3 (sheet 2) (Rev. 0)
t. 12.6-4 (sheet 1) (Rev. 0)
t. 12.6-4 (sheet 2) (Rev. 0)
t. 12.6-5 (Rev. 0)
f. 12.6-1 (Rev. 0)
f. 12.6-2 (Rev. 0)
f. 12.6-3 (Rev. 3)
f. 12.6-4 (Rev. 0)

f. 12.6-5 (Rev. 0)
f. 12.6-6 (Rev. 0)
f. 12.6-7 (Rev. 0)
f. 12.6-8 (Rev. 0)
f. 12.6-9 (Rev. 3)
f. 12.6-10 (Rev. 3)
f. 12.6-11 (Rev. 3)
f. 12.6-12 (Rev. 3)
f. 12.6-13 (Rev. 3)
f. 12.6-14 (Rev. 3)
p. 12.7-1 (Rev. 12D)
p. 12.7-2 (Rev. 12D)
p. 12.7-3 (Rev. 18A)
p. 12.7-4 (Rev. 18A)
p. 12.7-5 (Rev. 10C)
p. 12.7-6 (Rev. 10C)
p. 12.7-7 (Rev. 18A)
p. 12.7-8 (Rev. 10C)
f. 12.7-1 (Rev. 17B)
f. 12.7-2 (Rev. 17A)
f. 12.7-3 (Rev. 17A)
f. 12.7-4 (Rev. 17A)
f. 12.7-5 (Rev. 14B)
f. 12.7-6 (Rev. 8)
f. 12.7-7 (Rev. 13A)
f. 12.7-8 (Rev. 13A)
p. 12.8-1 (Rev. 0)
p. 12.9-1 (Rev. 0)
p. 12.9-2 (Rev. 1)
p. 12.9-3 (Rev. 0)
p. 12.9-4 (Rev. 18A)
p. 12.9-5 (Rev. 0)
p. 12.9-6 (Rev. 0)
p. 12.9-7 (Rev. 1)
p. 12.9-8 (Rev. 0)
t. 12.9-1 (Rev. 0)
t. 12.9-2 (Rev. 0)
p. i (chapter 13) (Rev. 18A)
p. ii (chapter 13) (Rev. 18A)
p. iii (chapter 13) (Rev. 18A)
p. iv (chapter 13) (Rev. 18A)
p. v (chapter 13) (Rev. 18A)
p. vi (chapter 13) (Rev. 18A)
p. 13.1-1 (Rev. 17B)
p. 13.2-1 (Rev. 0)
p. 13.3-1 (Rev. 0)
p. 13.4-1 (Rev. 18A)
p. 13.4-2 (Rev. 18A)
p. 13.4-3 (Rev. 18A)
p. 13.4-4 (Rev. 18A)
p. 13.4-5 (Rev. 18A)
p. 13.4-6 (Rev. 18A)
p. 13.4-7 (Rev. 18A)
p. 13.4-8 (Rev. 18A)
p. 13.4-9 (Rev. 18A)
p. 13.4-10 (Rev. 18A)
p. 13.4-11 (Rev. 18A)
p. 13.4-12 (Rev. 18A)
p. 13.4-13 (Rev. 18A)
p. 13.4-14 (Rev. 18A)
p. 13.4-15 (Rev. 18A)
p. 13.4-16 (Rev. 18A)
p. 13.4-17 (Rev. 18A)
p. 13.4-18 (Rev. 18A)
p. 13.4-19 (Rev. 18A)
p. 13.4-20 (Rev. 18A)
p. 13.4-21 (Rev. 18A)
p. 13.4-22 (Rev. 18A)
p. 13.4-23 (Rev. 18A)
p. 13.4-24 (Rev. 18A)
p. 13.4-25 (Rev. 18A)
p. 13.4-26 (Rev. 18A)
p. 13.5-1 (Rev. 18A)
p. 13.5-2 (Rev. 18A)
p. 13.6-1 (Rev. 18A)
p. 13.6-2 (Rev. 18A)
p. 13.6-3 (Rev. 18A)
p. 13.6-4 (Rev. 18A)
p. 13.6-5 (Rev. 18A)
p. 13.6-6 (Rev. 18A)
p. 13.6-7 (Rev. 18A)
p. 13.6-8 (Rev. 18A)
p. 13.6-9 (Rev. 18A)
p. 13.6-10 (Rev. 18A)
p. 13.6-11 (Rev. 18A)
p. 13.6-12 (Rev. 18A)
p. 13.6-13 (Rev. 18A)
p. 13.6-14 (Rev. 18A)
p. 13.6-15 (Rev. 18A)
p. 13.6-16 (Rev. 18A)
p. 13.6-17 (Rev. 18A)
p. 13.6-18 (Rev. 18A)
p. 13.6-19 (Rev. 18A)
p. 13.6-20 (Rev. 18A)
p. 13.6-21 (Rev. 18A)
p. 13.6-22 (Rev. 18A)
p. 13.6-23 (Rev. 18A)
p. 13.6-24 (Rev. 18A)
p. 13.6-25 (Rev. 18A)
p. 13.6-26 (Rev. 18A)
p. 13.6-27 (Rev. 18A)
p. 13.6-28 (Rev. 18A)
p. 13.6-29 (Rev. 18A)
p. 13.6-30 (Rev. 18A)

p. 13.6-31 (Rev. 18A)
p. 13.6-32 (Rev. 18A)
p. 13.6-33 (Rev. 18A)
p. 13.6-34 (Rev. 18A)
p. 13.6-35 (Rev. 18A)
p. 13.6-36 (Rev. 18A)
p. 13.6-37 (Rev. 18A)
p. 13.6-38 (Rev. 18A)
p. 13.6-39 (Rev. 18A)
p. 13.6-40 (Rev. 18A)
t. 13.6-1 (Rev. 18A)
t. 13.6-2 (Rev. 18A)
t. 13.6-3 (sheet 1) (Rev. 18A)
t. 13.6-3 (sheet 2) (Rev. 18A)
t. 13.6-3 (sheet 3) (Rev. 18A)
f. 13.6-1 (Rev. 18A)
p. 13.7-1 (Rev. 0)
p. 13.8-1 (Rev. 0)
p. 13.9-1 (Rev. 0)
p. 13.10-1 (Rev. 18A)
p. 13.11-1 (Rev. 18A)
p. 14.1-1 (Rev 18A)
p. i (appendix A) (Rev. 18A)
p. ii (appendix A) (Rev. 14C)
p. iii (appendix A) (Rev. 18A)
p. iv (appendix A) (Rev. 18A)
p. A.1-1 (Rev. 0)
p. A.1-2 (Rev. 2)
p. A.2-1 (Rev. 18A)
p. A.2-2 (Rev. 1)
t. A.2-1 (Rev. 0)
t. A.2-2 (sheet 1) (Rev. 0)
t. A.2-2 (sheet 2) (Rev. 0)
t. A.2-2 (sheet 3) (Rev. 18A)
t. A.2-2 (sheet 4) (Rev. 15B)
t. A.2-2 (sheet 5) (Rev. 15B)
t. A.2-3 (sheet 1) (Rev. 9C)
t. A.2-3 (sheet 2) (Rev. 11C)
t. A.2-3 (sheet 3) (Rev. 0)
t. A.2-3 (sheet 4) (Rev. 0)
t. A.2-3 (sheet 5) (Rev. 0)
t. A.2-3 (sheet 6) (Rev. 0)
t. A.2-3 (sheet 7) (Rev. 0)
t. A.2-3 (sheet 8) (Rev. 0)
t. A.2-3 (sheet 9) (Rev. 11C)
t. A.2-4 (Rev. 18A)
t. A.2-5 (sheet 1) (Rev. 13C)
t. A.2-5 (sheet 2) (Rev. 0)
t. A.2-5 (sheet 3) (Rev. 0)
t. A.2-5 (sheet 4) (Rev. 0)
t. A.2-5 (sheet 5) (Rev. 0)
t. A.2-5 (sheet 6) (Rev. 9C)
t. A.2-5 (sheet 7) (Rev. 0)
t. A.2-5 (sheet 8) (Rev. 0)
f. A.2-1 (Rev. 15B)
p. A.3-1 (Rev. 18A)
p. A.3-2 (Rev. 17B)
p. A.3-3 (Rev. 15B)
p. A.3-4 (Rev. 15B)
p. A.3-5 (Rev. 15B)
p. A.3-6 (Rev. 18A)
p. A.3-7 (Rev. 18A)
t. A.3-1 (sheet 1) (Rev. 3)
t. A.3-1 (sheet 2) (Rev. 3)
t. A.3-2 (Rev. 1)
p. A.4-1 (Rev. 8)
p. A.4-2 (Rev. 4)
p. A.4-3 (Rev. 0)
p. A.4-4 (Rev. 9A)
t. A.4-1 (sheet 1) (Rev. 1)
t. A.4-1 (sheet 2) (Rev. 1)
p. A.5-1 (Rev. 0)
t. A.5-1 (sheet 1) (Rev. 0)
t. A.5-1 (sheet 2) (Rev. 0)
t. A.5-1 (sheet 3) (Rev. 4)
t. A.5-1 (sheet 4) (Rev. 0)
t. A.5-1 (sheet 5) (Rev. 0)
t. A.5-1 (sheet 6) (Rev. 0)
t. A.5-1 (sheet 7) (Rev. 0)
t. A.5-1 (sheet 8) (Rev. 0)
t. A.5-1 (sheet 9) (Rev. 0)
t. A.5-1 (sheet 10) (Rev. 0)
t. A.5-1 (sheet 11) (Rev. 0)
t. A.5-1 (sheet 12) (Rev. 0)
t. A.5-1 (sheet 13) (Rev. 0)
t. A.5-1 (sheet 14) (Rev. 0)
t. A.5-1 (sheet 15) (Rev. 0)
p. A.6-1 (Rev. 9C)
t. A.6-1 (sheet 1) (Rev. 0)
t. A.6-1 (sheet 2) (Rev. 1)
t. A.6-1 (sheet 3) (Rev. 0)
t. A.6-1 (sheet 4) (Rev. 0)
t. A.6-1 (sheet 5) (Rev. 0)
t. A.6-1 (sheet 6) (Rev. 0)
t. A.6-1 (sheet 7) (Rev. 0)
t. A.6-2 (sheet 1) (Rev. 0)
t. A.6-2 (sheet 2) (Rev. 0)
p. A.7-1 (Rev. 0)
p. A.7-2 (Rev. 0)
p. i (appendix B) (Rev. 9A)
p. B.1-1 (Rev. 1)
p. i (appendix C) (Rev. 18A)
p. ii (appendix C) (Rev. 18A)
p. C.1-1 (Rev. 0)

p. C.2-1 (Rev. 18A)
p. C.2-2 (Rev. 18A)
p. C.2-3 (Rev. 18A)
t. C.2-1 (Rev. 0)
p. C.3-1 (Rev. 0)
p. C.3-2 (Rev. 0)
p. C.3-3 (Rev. 0)
p. C.3-4 (Rev. 11A)
p. C.3-5 (Rev. 0)
t. C.3-1 (sheet 1) (Rev. 0)
t. C.3-1 (sheet 2) (Rev. 0)
t. C.3-1 (sheet 3) (Rev. 0)
t. C.3-1 (sheet 4) (Rev. 0)
t. C.3-1 (sheet 5) (Rev. 18A)
t. C.3-1 (sheet 6) (Rev. 18A)
t. C.3-1 (sheet 7) (Rev. 0)
t. C.3-1 (sheet 8) (Rev. 3)
t. C.3-1 (sheet 9) (Rev. 0)
t. C.3-1 (sheet 10) (Rev. 0)
t. C.3-1 (sheet 11) (Rev. 0)
t. C.3-1 (sheet 12) (Rev. 0)
t. C.3-1 (sheet 13) (Rev. 11A)
t. C.3-1 (sheet 14) (Rev. 11A)
t. C.3-1 (sheet 15) (Rev. 0)
t. C.3-1 (sheet 16) (Rev. 0)
t. C.3-1 (sheet 17) (Rev. 18A)
t. C.3-1 (sheet 18) (Rev. 0)
t. C.3-1 (sheet 19) (Rev. 18A)
t. C.3-1 (sheet 20) (Rev. 18A)
t. C.3-1 (sheet 21) (Rev. 18A)
t. C.3-1 (sheet 22) (Rev. 0)
t. C.3-1 (sheet 23) (Rev. 0)
t. C.3-1 (sheet 24) (Rev. 0)
t. C.3-1 (sheet 25) (Rev. 0)
t. C.3-1 (sheet 26) (Rev. 0)
t. C.3-2 (sheet 1) (Rev. 18A)
t. C.3-2 (sheet 2) (Rev. 18A)
p. i (appendix D) (Rev. 18A)
p. ii (appendix D) (Rev. 18A)
p. D.1-1 (Rev. 18A)
p. D.2-1 (Rev. 18A)
p. D.3-1 (Rev. 18A)
p. D.4-1 (Rev. 18A)
p. D.5-1 (Rev. 18A)
p. D.6-1 (Rev. 18A)
p. D.7-1 (Rev. 18A)
p. D.8-1 (Rev. 18A)
p. D.9-1 (Rev. 18A)
t. D.9-1 (sheet 1) (Rev. 18A)
t. D.9-1 (sheet 2) (Rev. 18A)
t. D.9-1 (sheet 3) (Rev. 18A)
t. D.9-1 (sheet 4) (Rev. 18A)
t. D.9-1 (sheet 5) (Rev. 18A)
t. D.9-1 (sheet 6) (Rev. 18A)
t. D.9-1 (sheet 7) (Rev. 18A)
t. D.9-1 (sheet 8) (Rev. 18A)
t. D.9-1 (sheet 9) (Rev. 18A)
p. i (appendix E) (Rev 18A)
p. E-1 (Rev. 18A)
p. i (appendix F) (Rev. 18A)
p. ii (appendix F) (Rev. 18A)
p. F.1-1 (Rev. 18A)
p. F.2-1 (Rev. 18A)
p. F.2-2 (Rev. 18A)
p. F.2-3 (Rev. 18A)
p. F.2-4 (Rev. 18A)
p. F.2-5 (Rev. 18A)
p. F.2-6 (Rev. 18A)
p. F.2-7 (Rev. 18A)
p. F.2-8 (Rev. 18A)
p. F.2-9 (Rev. 18A)
t. F.2-1 (Rev. 18A)
t. F.2-2 (Rev. 18A)
t. F.2-3 (Rev. 18A)
t. F.2-4 (Rev. 18A)
t. F.2-5 (Rev. 18A)
t. F.2-6 (Rev. 18A)
t. F.2-7 (sheet 1) (Rev. 18A)
t. F.2-7 (sheet 2) (Rev. 18A)
t. F.2-8 (Rev. 18A)
t. F.2-9 (Rev. 18A)
t. F.2-10 (Rev. 18A)
p. F.3-1 (Rev. 18A)
p. F.3-2 (Rev. 18A)
p. F.3-3 (Rev. 18A)
p. F.3-4 (Rev. 18A)
p. F.3-5 (Rev. 18A)
p. F.3-6 (Rev. 18A)
p. F.3-7 (Rev. 18A)
p. F.3-8 (Rev. 18A)
p. F.3-9 (Rev. 18A)
p. F.3-10 (Rev. 18A)
p. F.3-11 (Rev. 18A)
p. F.3-12 (Rev. 18A)
p. F.3-13 (Rev. 18A)
p. F.3-14 (Rev. 18A)
p. F.3-15 (Rev. 18A)
p. F.3-16 (Rev. 18A)
p. F.3-17 (Rev. 18A)
p. F.3-18 (Rev. 18A)
p. F.3-19 (Rev. 18A)
p. F.3-20 (Rev. 18A)
p. F.3-21 (Rev. 18A)
p. F.3-22 (Rev. 18A)

p. F.3-23 (Rev. 18A)
p. F.3-24 (Rev. 18A)
p. F.3-25 (Rev. 18A)
p. F.3-26 (Rev. 18A)
p. F.3-27 (Rev. 18A)
p. F.3-28 (Rev. 18A)
p. F.3-29 (Rev. 18A)
p. F.3-30 (Rev. 18A)
p. F.3-31 (Rev. 18A)
p. F.3-32 (Rev. 18A)
p. F.3-33 (Rev. 18A)
p. F.3-34 (Rev. 18A)
p. F.3-35 (Rev. 18A)
p. F.3-36 (Rev. 18A)
p. F.3-37 (Rev. 18A)
p. F.3-38 (Rev. 18A)
p. F.3-39 (Rev. 18A)
p. F.3-40 (Rev. 18A)
p. F.3-41 (Rev. 18A)
p. F.3-42 (Rev. 18A)
p. F.3-43 (Rev. 18A)
p. F.3-44 (Rev. 18A)
p. F.3-45 (Rev. 18A)
p. F.3-46 (Rev. 18A)
p. F.3-47 (Rev. 18A)
p. F.3-48 (Rev. 18A)
p. F.3-49 (Rev. 18A)
p. F.3-50 (Rev. 18A)
p. F.3-51 (Rev. 18A)
p. F.3-52 (Rev. 18A)
p. F.3-53 (Rev. 18A)
p. F.3-54 (Rev. 18A)
p. F.3-55 (Rev. 18A)
p. F.3-56 (Rev. 18A)
p. F.3-57 (Rev. 18A)
p. F.3-58 (Rev. 18A)
p. F.3-59 (Rev. 18A)
p. F.3-60 (Rev. 18A)
p. F.3-61 (Rev. 18A)
p. F.3-62 (Rev. 18A)
p. F.3-63 (Rev. 18A)
p. F.3-64 (Rev. 18A)
p. F.3-65 (Rev. 18A)
p. F.3-66 (Rev. 18A)
p. F.3-67 (Rev. 18A)
p. F.3-68 (Rev. 18A)
p. F.3-69 (Rev. 18A)
p. F.3-70 (Rev. 18A)
p. F.3-71 (Rev. 18A)
p. F.3-72 (Rev. 18A)
p. F.3-73 (Rev. 18A)
p. F.3-74 (Rev. 18A)
t. F.3-1 (Rev. 18A)
t. F.3-2 (Rev. 18A)
p. G-1 (Rev. 18A)
p. i (appendix H) (Rev. 0)
p. H.1-1 (Rev. 15B)
p. H.2-1 (Rev. 15B)
p. H.3-1 (Rev. 0)
p. H.4-1 (Rev. 15B)
p. H.5-1 (Rev. 15B)
p. i (appendix I) (Rev. 9A)
p. ii (appendix I) (Rev. 18B)
p. I.1-1 (Rev. 0)
p. I.1-2 (Rev. 0)
p. I.1-3 (Rev. 0)
p. I.1-4 (Rev. 0)
p. I.1-5 (Rev. 0)
p. I.1-6 (Rev. 0)
p. I.1-7 (Rev. 0)
p. I.1-8 (Rev. 0)
p. I.1-9 (Rev. 0)
p. I.1-10 (Rev. 0)
p. I.1-11 (Rev. 0)
p. I.1-12 (Rev. 0)
p. I.1-13 (Rev. 0)
p. I.1-14 (Rev. 0)
p. I.1-15 (Rev. 0)
p. I.1-16 (Rev. 0)
p. I.1-17 (Rev. 0)
p. I.1-18 (Rev. 0)
p. I.1-19 (Rev. 0)
p. I.1-20 (Rev. 0)
p. I.1-21 (Rev. 0)
p. I.1-22 (Rev. 0)
p. I.1-23 (Rev. 0)
p. I.1-24 (Rev. 0)
p. I.1-25 (Rev. 0)
p. I.1-26 (Rev. 0)
p. I.1-27 (Rev. 0)
p. I.1-28 (Rev. 0)
p. I.1-29 (Rev. 0)
p. I.1-30 (Rev. 0)
p. I.1-31 (Rev. 0)
p. I.1-32 (Rev. 0)
p. I.1-33 (Rev. 0)
p. I.1-34 (Rev. 0)
p. I.1-35 (Rev. 0)
p. I.1-36 (Rev. 0)
p. I.1-37 (Rev. 0)
p. I.1-38 (Rev. 0)
p. I.1-39 (Rev. 0)
p. I.1-40 (Rev. 0)
p. I.1-41 (Rev. 0)

p. I.1-42 (Rev. 0)
p. I.1-43 (Rev. 0)
p. I.1-44 (Rev. 0)
p. I.1-45 (Rev. 0)
p. I.1-46 (Rev. 0)
p. I.1-47 (Rev. 0)
p. I.1-48 (Rev. 0)
p. I.1-49 (Rev. 0)
p. I.1-50 (Rev. 0)
p. I.1-51 (Rev. 0)
p. I.1-52 (Rev. 0)
p. I.1-53 (Rev. 0)
p. I.1-54 (Rev. 0)
p. I.1-55 (Rev. 0)
p. I.1-56 (Rev. 0)
p. I.1-57 (Rev. 0)
p. I.1-58 (Rev. 0)
p. I.1-59 (Rev. 0)
p. I.1-60 (Rev. 0)
p. I.1-61 (Rev. 0)
p. I.1-62 (Rev. 0)
p. I.1-63 (Rev. 0)
p. I.1-64 (Rev. 0)
p. I.1-65 (Rev. 0)
p. I.1-66 (Rev. 0)
p. I.1-67 (Rev. 0)
p. I.1-68 (Rev. 0)
p. I.1-69 (Rev. 0)
p. I.1-70 (Rev. 0)
p. I.1-71 (Rev. 0)
p. I.1-72 (Rev. 0)
p. I.1-73 (Rev. 0)
p. I.1-74 (Rev. 0)
p. I.1-75 (Rev. 0)
p. I.1-76 (Rev. 0)
p. I.1-77 (Rev. 0)
p. I.1-78 (Rev. 0)
p. I.1-79 (Rev. 0)
p. I.1-80 (Rev. 0)
p. I.1-81 (Rev. 0)
p. I.1-82 (Rev. 0)
p. I.1-83 (Rev. 0)
p. I.1-84 (Rev. 0)
p. I.1-85 (Rev. 0)
p. I.1-86 (Rev. 0)
f. I.1-1 (Rev. 7)
f. I.1-2 (Rev. 7)
f. I.1-3 (Rev. 7)
f. I.1-4 (Rev. 7)
f. I.1-5 (Rev. 0)
f. I.1-6 (Rev. 7)
p. i (appendix J) (Rev. 18A)
p. ii (appendix J) (Rev. 18A)
p. iii (appendix J) (Rev. 18A)
p. iv (appendix J) (Rev. 18A)
p. J.1-1 (Rev. 18A)
p. J.2-1 (Rev. 18A)
p. J.2-2 (Rev. 18A)
p. J.2-3 (Rev. 18A)
p. J.2-4 (Rev. 18A)
p. J.2-5 (Rev. 18A)
p. J.2-6 (Rev. 18A)
p. J.2-7 (Rev. 18A)
p. J.3-1 (Rev. 18A)
p. J.3-2 (Rev. 18A)
p. J.3-3 (Rev. 18A)
p. J.3-4 (Rev. 18A)
p. J.3-5 (Rev. 18A)
p. J.4-1 (Rev. 18A)
p. J.4-2 (Rev. 18A)
p. J.4-3 (Rev. 18A)
p. J.4-4 (Rev. 18A)
p. J.4-5 (Rev. 18A)
p. J.4-6 (Rev. 18A)
p. J.4-7 (Rev. 18A)
p. J.4-8 (Rev. 18A)
p. J.4-9 (Rev. 18A)
p. J.4-10 (Rev. 18A)
p. J.4-11 (Rev. 18A)
p. i (appendix K) (Rev. 0)
p. ii (appendix K) (Rev. 0)
p. iii (appendix K) (Rev. 1)
p. K.1-1 (Rev. 0)
p. K.2-1 (Rev. 0)
p. K.2-2 (Rev. 12A)
t. K.2-1 (sheet 1) (Rev. 0)
t. K.2-1 (sheet 2) (Rev. 18A)
p. K.3-1 (Rev. 0)
p. K.3-2 (Rev. 0)
t. K.3-1 (Rev. 0)
f. K.3-1 (Rev. 1)
f. K.3-2 (Rev. 7)
f. K.3-3 (Rev. 0)
f. K.3-4 (Rev. 7)
f. K.3-5 (Rev. 7)
f. K.3-6 (Rev. 7)
f. K.3-7 (Rev. 7)
f. K.3-8 (Rev. 7)
f. K.3-9 (Rev. 7)
f. K.3-10 (Rev. 0)
f. K.3-11 (Rev. 0)
f. K.3-12 (Rev. 0)
f. K.3-13 (Rev. 0)
p. K.4-1 (Rev. 0)

p. K.4-2 (Rev. 0)
p. K.4-3 (Rev. 0)
t. K.4-1 (sheet 1) (Rev. 0)
t. K.4-1 (sheet 2) (Rev. 0)
f. K.4-1 (Rev. 0)
f. K.4-2 (Rev. 0)
f. K.4-3 (Rev. 1)
p. K.5-1 (Rev. 0)
p. K.5-2 (Rev. 0)
t. K.5-1 (Rev. 2)
t. K.5-2 (Rev. 0)
p. K.6-1 (Rev. 0)
t. K.6-1 (Rev. 0)
t. K.6-2 (Rev. 0)
f. K.6-1 (Rev. 0)
f. K.6-2 (Rev. 0)
p. K.7-1 (Rev. 0)
p. K.7-2 (Rev. 0)
f. K.7-1 (Rev. 0)
f. K.7-2 (Rev. 0)
f. K.7-3 (Rev. 0)
p. K.8-1 (Rev. 0)
p. K.9-1 (Rev. 0)
p. K.9-2 (Rev. 0)
p. i (supplement KA) (Rev. 9A)
p. ii (supplement KA) (Rev. 9A)
p. KA-1 (Rev. 2)
p. KA-2 (Rev. 18A)
p. KA-3 (Rev. 9A)
p. KA-4 (Rev. 18A)
t. KA-1 (sheet 1) (Rev. 2)
t. KA-1 (sheet 2) (Rev. 2)
p. M-1 (Rev. 18A)
p. i (appendix N) (Rev. 0)
p. ii (appendix N) (Rev. 9A)
p. iii (appendix N) (Rev. 0)
p. iv (appendix N) (Rev. 0)
p. v (appendix N) (Rev. 9A)
p. N.1-1 (Rev. 0)
p. N.2-1 (Rev. 9C)
p. N.3-1 (Rev. 1)
p. N.3-2 (Rev. 3)
p. N.3-3 (Rev. 3)
p. N.3-4 (Rev. 18A)
p. N.3-5 (Rev. 18A)
p. N.3-6 (Rev. 18A)
p. N.3-7 (Rev. 18A)
p. N.3-8 (Rev. 18A)
p. N.3-9 (Rev. 18A)
p. N.4-1 (Rev. 0)
p. N.4-2 (Rev. 17A)
p. N.4-3 (Rev. 16)
p. N.4-4 (Rev. 17A)
p. N.4-5 (Rev. 14D)
p. N.4-6 (Rev. 0)
p. N.4-7 (Rev. 1)
p. N.4-8 (Rev. 1)
p. N.4-9 (Rev. 17A)
p. N.4-10 (Rev. 1)
p. N.4-11 (Rev. 1)
p. N.4-12 (Rev. 1)
p. N.4-13 (Rev. 1)
p. N.4-14 (Rev. 1)
p. N.4-15 (Rev. 0)
p. N.4-16 (Rev. 1)
p. N.4-17 (Rev. 1)
p. N.4-18 (Rev. 1)
p. N.4-19 (Rev. 0)
p. N.4-20 (Rev. 5)
t. N.4-1 (Rev. 18A)
t. N.4-2 (Rev. 10B)
p. N.5-1 (Rev. 18A)
p. N.5-2 (Rev. 1)
p. N.5-3 (Rev. 18A)
p. N.5-4 (Rev. 0)
p. N.5-5 (Rev. 0)
p. N.5-6 (Rev. 0)
p. N.5-7 (Rev. 0)
p. N.5-8 (Rev. 13C)
p. N.5-9 (Rev. 0)
p. N.5-10 (Rev. 18A)
p. N.5-11 (Rev. 18A)
p. N.5-12 (Rev. 18A)
p. N.5-13 (Rev. 18A)
p. N.5-14 (Rev. 10B)
p. N.5-15 (Rev. 18A)
p. N.5-16 (Rev. 18A)
p. N.5-17 (Rev. 18A)
p. N.5-18 (Rev. 15B)
p. N.5-19 (Rev. 18A)
p. N.5-20 (Rev. 14D)
p. N.5-21 (Rev. 0)
p. N.5-22 (Rev. 18A)
p. N.5-23 (Rev. 6)
p. N.5-24 (Rev. 6)
p. N.5-25 (Rev. 18A)
p. N.5-26 (Rev. 8)
p. N.5-27 (Rev. 18A)
t. N.5-1 (sheet 1) (Rev. 15B)
t. N.5-1 (sheet 2) (Rev. 15A)
t. N.5-2 (sheet 1) (Rev. 0)
t. N.5-2 (sheet 2) (Rev. 0)
t. N.5-2 (sheet 3) (Rev. 14D)
f. N.5-1 (Rev. 0)

f. N.5-2 (Rev. 0)
f. N.5-3 (Rev. 3)
f. N.5-4 (Rev. 1)
f. N.5-5 (Rev. 0)
f. N.5-6 (Rev. 0)
f. N.5-7 (Rev. 18A)
f. N.5-8 (Rev. 9A)
f. N.5-9 (Rev. 7)
f. N.5-10 (Rev. 10B)
f. N.5-11 (Rev. 1)
f. N.5-12 (Rev. 0)
f. N.5-13 (Rev. 0)
f. N.5-14 (Rev. 0)
f. N.5-15 (Rev. 0)
f. N.5-16 (Rev. 0)
p. N.6-1 (Rev. 0)
p. N.6-2 (Rev. 0)
p. N.6-3 (Rev. 0)
f. N.6-1 (sheet 1) (Rev. 0)
f. N.6-1 (sheet 2) (Rev. 0)
f. N.6-1 (sheet 3) (Rev. 0)
f. N.6-2 (Rev. 0)
f. N.6-3 (Rev. 0)
f. N.6-4 (Rev. 0)
p. N.7-1 (Rev. 1)
p. i (appendix R) (Rev. 9A)
p. ii (appendix R) (Rev. 0)
p. R.1-1 (Rev. 16)
p. R.2-1 (Rev. 16)
p. R.3-1 (Rev. 0)
p. R.4-1 (Rev. 4)
p. R.4-2 (Rev. 0)
p. R.4-3 (Rev. 0)
p. R.4-4 (Rev. 16)
p. R.4-5 (Rev. 17A)
p. R.4-6 (Rev. 16)
p. R.4-7 (Rev. 0)
p. R.4-8 (Rev. 0)
p. R.4-9 (Rev. 0)
p. R.4-10 (Rev. 4)
p. R.4-11 (Rev. 16)
p. R.4-12 (Rev. 16)
f. R.4-1 (Rev. 0)
p. R.5-1 (Rev. 16)
p. R.5-2 (Rev. 15B)
p. R.5-3 (Rev. 16)
p. R.5-4 (Rev. 4)
p. R.5-5 (Rev. 4)
p. R.5-6 (Rev. 16)
p. R.5-7 (Rev. 16)
p. R.5-8 (Rev. 4)
p. R.5-9 (Rev. 16)
p. R.5-10 (Rev. 16)
p. R.5-11 (Rev. 17A)
p. R.5-12 (Rev. 17A)
p. R.5-13 (Rev. 17A)
p. R.5-14 (Rev. 17A)

LIST OF TABLES

Table No.	Table Title
1.11-1	*Topical Reports Submitted to the NRC in Support of HNP-1 Initial License Application*
1.11-2	*ACRS Concerns - Resolutions*
2.2-1	Projected Population Change From 2012 Through 2015 Within 50-Mile Radius of Site
2.2-2	Deen's Landing Recreational Survey (Saturday, August 12, 1972)
2.2-3	Normal Operation-Ecology Sanctuary, Visitor Center, River, and Road Doses
2.2-4	Farm Types in Appling and Toombs Counties
2.2-5	Agricultural Land Use in Appling and Toombs Counties
2.2-6	Selected Agricultural Units Sold in Appling and Toombs Counties
2.2-7	Value of Agricultural Products Sold in Appling and Toombs Counties
2.2-8	Dairies Located in the Plant Hatch Vicinity
4.2-1	Reactor Vessel Materials
4.2-2	Typical Reactor Vessel Data
4.2-3	Component Design Transient Limits
4.2-4	RT_{NDT} Values for Reactor Vessel Materials
4.2-5	Specimens Furnished for Surveillance Program
4.2-6	Beltline Art Values for HNP-1 (Based upon Extended Power Uprate)
4.3-1	Reactor Recirculation System Design Data
4.4-1	Nuclear System SRVs and Electrical Backup Set Pressures and Capacities
4.7-1	RCIC System Turbine and Pump Design Data
4.8-1	Summary of RHR System Modes of Operation
4.8-2	RHR System Design Data
4.9-1	Reactor Water Cleanup System Equipment Design Data
4.10-1	Summary of Isolation/Alarm of Systems Monitored and the Leak Detection Methods Used
4.11-1	Low-Low Set SRV System for HNP-1
5.2-1	Primary Containment System Principal Design Parameters and Characteristics
5.2-2	(deleted)
5.2-3	Motor-Operated Reactor Coolant System Isolation Valves
5.2-4	Primary Containment Cooling System Design Parameters
5.2-5	Primary Containment Atmosphere Monitors-Instrument Data
5.2-6	Results of Analysis for Protection of Essential Components Against Effects of Postulated Pipe Breaks
5.2-7	Recirculation Suction Line
5.2-8	Summary of Analyses - Pipe Break Which Could Impact Containment Wall

LIST OF TABLES (CONTINUED)

Table No.	Table Title
5.2-9	Comparison of HNP-1 Containment and Bodega Bay Test Facility
5.2-10	Parameter Values for Calculating Hydrogen and Oxygen Concentrations in Containment
5.2-11	CAD Venting Whole-Body and Thyroid Dose Averaging Annual Meteorology
6.3-1	ECCS Equipment Design Data Summary
6.5-1	ECCS Performance Results
6.5-2	Single-Failure Assessment
6.5-3	Operational Parameters for LOCA Analysis
6.5-4	Plant ECCS Parameters
6.5-5	Summary of LOCA Analysis Results
7.1-1	Safety-Related Instrumentation, Control, and Electrical Systems Diagrams
7.1-2	Definitions Applicable to Instrumentation and Control of Protection Systems
7.2-1	Reactor Protection System Scram Settings
7.2-2	Reactor Protection System Minimum Number of Operable Channels Required for Function Performance Startup Mode
7.2-3	Reactor Protection System Minimum Number of Operable Channels Required for Functional Performance Run Mode
7.3-1	Isolation Valves for Lines Penetrating the Primary Containment
7.3-2	Primary Containment and Reactor Vessel Isolation Control System Isolation Setpoints
7.4-1	HPCI System Instrumentation Initiation and Control Settings
7.4-2	ADS Instrument Trip Settings
7.4-3	CS System Instrument Trip Settings
7.4-4	LPCI Instrument Trip Settings
7.4-5	Operating Requirements for Pressure Relief Valve Air Actuator Diaphragms
7.5-1	SRM Trips
7.5-2	IRM Trips
7.5-3	LPRM Trips
7.5-4	APRM Trips
7.6-1	Refueling Interlock Effectiveness
7.8-1	Reactor Vessel Instrumentation Instrument Specifications
7.12-1	Process Radiation Monitoring Systems Characteristics
7.12-2	Process Radiation Monitoring System Environmental and Power Supply Design Conditions
7.13-1	Area Radiation Monitoring System Environmental and Power Supply Design Conditions
7.16-1	Systems Required to Mitigate a LOCA or a High-Energy Line Break
7.16-2	Plant Locations With LOCA or High-Energy Line Break Temperature Profile

LIST OF FIGURES (CONTINUED)

Figure No.	Figure Title
7.3-1	Nuclear Boiler System (P&ID)
7.3-2	Typical Isolation Control System for Main Steam Isolation Valves
7.3-3	Typical Isolation Control System Using Motor-Operated Valves
7.3-4	Main Steam Line Isolation Valve, Schematic Control Diagram
7.3-5	Nuclear Boiler System (FCD)
7.3-6	Main Steam Line High Flow Channels
7.3-7	HPCI or RCIC Room Temperature Detector Arrangement
7.3-8	Typical Elbow Flow-Sensing Arrangement
7.3-9	Reactor Water Cleanup Break Detection by Differential Flow Measurement
7.3-10	Reactor Water Cleanup Break Detection by High Ambient and High Diffferential Temperature Measurement
7.4-1	Typical ECCS Actuation and Initiation Logic
7.4-2	High-Pressure Coolant Injection System P&ID
7.4-3	High-Pressure Coolant Injection System (FCD)
7.4-4	Typical ECCS Trip System Actuation Logic
7.4-5	Core Spray System P&ID
7.4-6	Core Spray System (FCD)
7.4-7	RHR System P&ID
7.4-8	Residual Heat Removal System (FCD)
7.4-9	Reactor Recirculation System (FCD)
7.5-1	Neutron Monitoring System (IED)
7.5-2	SRM/IRM Neutron Monitoring Unit
7.5-3	Detector Drive System Schematic
7.5-4	Functional Block Diagram of SRM Channel
7.5-5	Ranges of Neutron Monitoring System
7.5-6	Functional Block Diagram of IRM Channel
7.5-7	Typical IRM Circuit Arrangement for RPS Input
7.5-8	Control Rod Withdrawal Error
7.5-9	Power Range Neutron Monitoring Unit
7.5-10	(Sheet 1 of 5) APRM/RBM Power Distribution
7.5-10	(Sheet 2 of 5) PRNM Logic Interface Block Diagram
7.5-10	(Sheet 3 of 5) APRM/RPS Interface Block Diagram
7.5-10	(Sheet 4 of 5) APRM/RBM Configuration Block Diagram
7.5-10	(Sheet 5 of 5) Flow Reference and RBM Instrumentation
7.5-11	(deleted)
7.5-12	(deleted)
7.5-13	Envelope of Maximum APRM Deviation by Flow Control Reduction in Power
7.5-14	Envelope of Maximum APRM Deviation for APRM Tracking With On-Limits Control Rod Withdrawal
7.5-15	(Sheet 1 of 2) Assignment of Power Range Detector Assemblies to RBM
7.5-15	(Sheet 2 of 2) LPRM to RBM Assignment Scheme
7.5-16	Assignment of LPRM Strings to TIP Machines
7.5-17	Traversing Incore Probe Subsystem Block Diagram
7.5-18	Traversing Incore Probe Assembly

LIST OF FIGURES (CONTINUED)

Figure No.	Figure Title
7.5-19	TIP Equipment and NMS Arrangement
7.5-20	Neutron Monitoring System (FCD)
7.5-21	Typical RBM Channel Responses (No Failed LPRMs)
7.7-1	Control Rod Drive Hydraulic System (FCD)
7.7-2	(Deleted)
7.7-3	Input Signals to Four-Rod Display
7.9-1	Recirculation Flow Control Illustration
7.10-1	Feedwater Control System (Turbine-Driven Feed Pumps) Instrumentation and Electrical Diagram
7.11-1	Simplified Diagram of Turbine Pressure and Speed-Load Control System
7.11-2	Diagram of Reactor Pressure, Turbine Speed, and Recirculation Flow Control Systems
7.13-1	Area Radiation Monitoring System Functional Block Diagram
7.16-1	System Component Evaluation Worksheet
7.16-2	Worst-Case Accident Profile for Equipment Located in Containment
7.18-1	Typical Trip Unit/Calibration System Elementary
7.19-1	LLS Relief Logic Diagram
7.19-2	LLS Logic for Channel A (Typical for Channels B, C, and D)
7.19-3	Channels A and C Indicators (Typical for Channels B and D)
7.21-1	Emergency Response Facilities/Safety Parameter Display System (ERF/SPDS) Block Diagram
8.3-1	4160-V Auxiliary Electrical Power System
8.3-2	600-V Auxiliary Electrical Power System
8.4-1	4160-V Standby ac Power Supply
8.4-2	Logic for Manual Loading of Diesel Generators
8.4-3	Diesel Engine and Fuel Oil System P&ID
8.5-1	125/250-V-dc Station Service
8.5-2	125-V-dc Emergency Station Service
8.5-3	Loads on 4160-V and 600-V Emergency Buses
8.6-1	24/48-V-dc Instrumentation Supply
8.7-1	120-208/120-240 V-ac Power System
8.8-1	Schematic Diagram of Divisional Raceways
9.2-1	Radwaste System Process Diagram
9.2-2	Radwaste System P&ID
9.2-3	Radwaste Building Addition Support Systems P&ID and P.F.D.
9.4-1	Off-Gas System
10.3-1	Unit 1 High-Density Fuel Storage System Arrangement
10.4-1	Fuel Pool Cooling System P&ID
10.4-2	Fuel Pool Filter Demineralizer System P&ID

LIST OF FIGURES (CONTINUED)

Figure No.	Figure Title
12.6-11	Reactor Building 1984 Response Spectra DBE (N-S) for Floor at el 228 ft
12.6-12	Reactor Building 1984 Response Spectra OBE (N-S) for Floor at el 228 ft
12.6-13	Reactor Building 1984 Response Spectra DBE (E-W) for Floor at el 228 ft
12.6-14	Reactor Building 1984 Response Spectra OBE (E-W) for Floor at el 228 ft
12.7-1	Access Control Floor Plan el 87 ft
12.7-2	Access Control Floor Plan el 130 ft
12.7-3	Access Control Floor Plan el 144 ft and 147 ft
12.7-4	Access Control Floor Plan el 158 ft
12.7-5	Access Control Floor Plan el 185 ft
12.7-6	Access Control Floor Plan el 203 ft, 228 ft, and 224 ft 10 in.
12.7-7	Access Control Floor Plan Waste Gas Treatment Building
12.7-8	Access Control Floor Plan Off-Gas Recombiner Building and Main Stack
13.6-1	*Approximate Power Flow Map Showing Startup Test Conditions*
A.2-1	System Classification Diagram
I.1-1	Vessel Assembly
I.1-2	General Arrangement - Elevation
I.1-3	General Arrangement - Plan
I.1-4	Recirculation Nozzle Details
I.1-5	Feedwater, Steam, and Core Spray Nozzle Details
I.1-6	Miscellaneous Nozzle Details
K.3-1	General Arrangement Primary Containment
K.3-2	Torus Cross Section
K.3-3	Drywell Shear Key Details
K.3-4	Torus Earthquake Ties
K.3-5	Drywell Shell Stretchout
K.3-6	Drywell Penetrations Below Equator
K.3-7	Drywell Penetrations Below el 150 ft
K.3-8	Drywell Penetrations Above el 150 ft
K.3-9	Torus Penetrations
K.3-10	Penetration Type 1
K.3-11	Penetration Types 2, 3, and 4
K.3-12	Penetration Type 5
K.3-13	Penetration Types 9 and 9A
K.4-1	Drywell Acceleration and Deflection (Operating Basis Earthquake)
K.4-2	Drywell Acceleration and Deflection (Design Basis Earthquake)

LIST OF FIGURES (CONTINUED)

Figure No.	Figure Title
K.4-3	Vent Jet Deflections
K.6-1	Location of Different Materials
K.6-2	Drywell Elevation
K.7-1	Typical Radial Beam Support
K.7-2	Male Stabilizer Assembly
K.7-3	Female Stabilizer Assembly
N.5-1	Main Steam and Feedwater Lines, Main Steam Pipe Chase, Reactor Building Elevation View
N.5-2	Main Steam and Feedwater Lines, Main Steam Pipe Chase, Reactor Building, Plan View
N.5-3	Main Steam and Feedwater Lines, Turbine Building, Plan View
N.5-4	Main Steam Line Isometric Diagram Reactor and Turbine Buildings Looking West
N.5-5	HPCI Steam and RHR Lines Pipe Penetration Room Reactor Building el 130 ft Plan View
N.5-6	HPCI Steam and RHR Lines Pipe Penetration Room Reactor Building el 130 ft Section View
N.5-7	HPCI Steam, RHR and Service Water Lines, Torus and East Corner Rooms Reactor Building Below el 130 ft Plan View
N.5-8	RCIC Steam Line, Southwest Corner Room, Reactor Building Below el 130 ft
N.5-9	RWC Lines Reactor Building el 158 ft Plan View
N.5-10	Auxiliary Steam Lines, Reactor Building, Plans and Sections
N.5-11	CRD Return Line, Reactor Building el 130 ft Plan View
N.5-12	RHR and PSW Piping in Intake Structure
N.5-13	Main Steam and Feedwater Anchor Frame Details, Main Steam Pipe Chase
N.5-14	Jet Impingement Evaluation, MSLB in Main Steam Pipe Chase, Reactor Building
N.5-15	MSLB Accident, Mass of Coolant Loss Through Break With 5-s MSIV Closing Time
N.5-16	Location of MCR With Respect to Main Steam Lines, View Looking East
N.6-1	Vent Area Addition to HVAC Room, Reactor Building el 164 ft From Main Steam Pipe Chase for MSLB
N.6-2	Main Steam Pipe Chase Floor el 129 ft Above Torus Chamber Room
N.6-3	Pipe Penetration Room Reactor Building Floor el 130 ft Roof Hatch Arrangement
N.6-4	Reactor Building Floor el 130 ft Above RCIC (SW) Corner Room
R.4-1	Vessel Beltline Regions

TABLE 4.2-6

BELTLINE ART VALUES FOR HNP-1
(BASED UPON EXTENDED POWER UPRATE)

Lower Intermediate shell
Thickness = 5.38 in.

Lower shell
Weld thickness = 5.38 in.(Girth)
Plate thickness = 6.38 in.

Lower Intermediate shell
32 EFPY Peak ID fluence = 1.94E+18 n/cm^2
32 EFPY Peak 1/4 T fluence = 1.40E+18 n/cm^2

Lower shell
32 EFPY peak ID fluence = 1.32E + 18 n/cm^2
32 EFPY peak 1/4 T weld fluence = 9.55E + 17 n/cm^2
32 EFPY peak 1/4 T plate fluence = 9.00E + 17 n/cm^2

Component	Weld Type	Heat or Heat/lot	%/Cu	%Ni	CF	Adjusted CF	Initial RT_{NDT} (°F)	32 EFPY ΔRT_{NDT} (°F)	σ_1	$\sigma\Delta$	Margin (°F)	32 EFPY Shift (°F)	32 EFPY ART (°F)
PLATES:													
Lower													
G-4805-1		C4112-1	0.13	0.64	92	241	8	95.5	0.0	8.5	17	112.5	120.5
G-4805-2		C4112-2	0.13	0.64	92	241	10	95.5	0.0	8.5	17	112.5	122.5
G-4805-3		C4149-1	0.14	0.57	99	258	-10	102.4	0.0	8.5	17	119.4	109.4
Lower-Intermed													
G-4803-7		C4337-1	0.17	0.62	128	334	-20	163.1	0.0	8.5	17	180.1	160.1
G-4804-1		C3985-2	0.13	0.58	90	237	-20	115.6	0.0	8.5	17	132.6	112.6
G-4804-2		C4114-2	0.13	0.70	94	245	-20	119.6	0.0	8.5	17	136.6	116.6
WELDS:													
Lower Long	1-307	13253/1092 Flux 3791	0.27	0.74	206	206	-50	81.6	0.0	28.0	56	137.6	87.6
Lower Intermed Long	1-308	IP2809/1092 Flux 3854	0.28	0.76	212	212	-50	103.5	0.0	28.0	56	159.5	109.5
		IP2815/1092 Flux 3854	0.28	0.76	212	212	-50	103.4	0.0	28.0	56	159.4	109.4
Lower to Lower-Int Girth	1-313	90099/0091 Flux 3977	0.17	1.00	207	207	-10	84.4	0.0	28.0	56	140.4	130.4
		33A277/0091 Flux 3977	0.23	1.00	236	236	-50	96.2	0.0	28.0	56	152.2	102.2

The zero containment leakage case is shown as a reference only, since some containment leakage is expected. Also, as can be seen from figure 5.2-23, the operator has sufficient time to assess the transient containment pressure and take appropriate steps to assure that the containment pressure remains well under the design pressure.

Corrosive containment sprays and emergency cooling solutions are not used in HNP-1. Hydrogen production due to corrosion is expected to be negligible and, in any case, oxygen is being controlled by nitrogen dilution.

5.2.4.10 Combustible Gas Control Analysis of Extended Power Uprate (2763 MWt)

For extended power uprate to 2763 MWt, an analysis using the same Safety Guide 7 (now Regulatory Guide 1.7) assumptions as in the above paragraph 5.2.4.9 analysis, as well as the latest design data was performed. The analysis results show the CAD system is still capable of controlling oxygen concentrations to within allowable limits. The new analysis shows the oxygen concentration in the torus and drywell, without CAD, reaching 5 v/o at 3.5 and 4 days, respectively, which is later than in 2.5 days from the paragraph 5.2.4.9 analysis. The later time to reach 5 v/o oxygen concentration is mainly due to the dilution effect of the greater metal-water hydrogen based on the latest fuel data. With the latest fuel data, more hydrogen is generated, which in turn increases the total amount of lb moles diluting the oxygen concentration.

If no credit is taken for the steam and metal-water hydrogen dilution, the O_2 concentration in the torus and drywell will reach 5 v/o at 9 h (0.375 days) and 12 h (0.5 days), respectively, which is earlier than 14 h from paragraph 5.2.4.9. These earlier times are the absolute minimum times at which the CAD system must be actuated.

For conservatism, the extended power uprate analysis used an oxygen concentration control limit of 4.0 v/o rather than 5 v/o. The oxygen concentration can be limited to 4.0 v/o if the CAD system is turned on when the O_2 concentration reaches 4 v/o (at 1.55 days for the torus and 2.14 days for the drywell) with a constant flow rate of 30 sft^3/min each to both the drywell and torus. The modeled CAD flow rate (2 x 30 sft^3/min or 60 sft^3/min) is well within the design capacity of the CAD system (100 sft^3/min). The CAD flow rate of 30 sft^3/min is chosen however, any flow rate greater than the largest required CAD flow rates (calculated as 19 sft^3/min for the torus and 24.3 sft^3/min for the drywell) will limit the O_2 concentration.

With a constant CAD flow rate of 30 sft^3/min to both the drywell and the torus, and no containment leakage modeled, containment pressure exceeds 28 psig or ~ 43 psia (50% of design) after 5 days. In reality, the required CAD flow rate will decrease with time, and the pressure rise will be more gradual. Containment purging or venting can be used for pressure relief. Plant emergency operating procedures specify containment purging/venting requirements for pressure control in conjunction with the CAD system.

5.2.5 INSPECTION AND TESTING

This subsection describes the inspection and tests that are provided for the various systems or components of the primary containment as they applied during construction or plant operation.

5.2.5.1 Primary Containment Integrity and Leaktightness

Fabrication procedures, nondestructive testing, and sample coupon tests were made in accordance with the ASME Boiler and Pressure Vessel Code, Section III, Subsection B. The integrity of the primary containment system was verified by a pneumatic test of the drywell and suppression chamber at 1.25 times their design pressure of 56 psig in accordance with code requirements.

After complete installation of all penetrations in the drywell and suppression chamber, the vessel was pressurized to the peak calculated pressure and measurements taken to verify that the integrated leakage rate from the vessel did not exceed 1.2 percent per day. Since both the drywell and suppression chamber are designed for the same pressure, it is possible to test the entire primary containment at the same time and without the necessity of providing temporary closures to isolate the suppression chamber from the drywell. Provisions are made to permit periodic leakage rate retests.

The containment leak test program is performed in the manner described in BN-TOP-1[1] or ANSI/ANS-56.8-1994. The test program is in compliance with Appendix J of 10 CFR 50, Reactor Containment Leakage Testing for Water Cooled Power Reactors. Some valves, such as feedwater check valves, are local leak tested by filling the test volume with water and pressurizing the test volume with air at 1.1 times the peak calculated pressure. This procedure satisfies the intent of Appendix J for valves which were not originally purchased to be leak tight with air at high pressure.

7.4 EMERGENCY CORE COOLING SYSTEM CONTROL AND INSTRUMENTATION

7.4.1 SAFETY OBJECTIVE

The controls and instrumentation for the emergency core cooling system (ECCS) initiate appropriate responses from the various cooling systems so that the fuel is adequately cooled under abnormal or accident conditions. The cooling provided by the systems restricts the release of radioactive materials from the fuel by limiting the extent of fuel damage following situations in which reactor coolant is lost from the nuclear system.

Even after the reactor is shut down from power operation by the full insertion of all control rods, heat continues to be generated in the fuel as radioactive fission products decay. An excessive loss of reactor coolant allows the fuel temperature to rise, cladding to melt, and fission products in the fuel to be released. If the temperatures in the reactor rise to a sufficiently high value, a metal (zirconium) water reaction occurs, which releases energy. Such a reaction increases the pressure inside the nuclear system and the primary containment. This threatens the integrity of the barriers which are relied upon to prevent the uncontrolled release of radioactive material. The ECCS controls and instrumentation prevent such a sequence of events by actuating core cooling systems in time to limit fuel temperatures to acceptable levels.

7.4.2 SAFETY DESIGN BASES

A. Controls and instrumentation provide precise, reliable, automatic control of the ECCS. To prevent fuel-cladding damage or core deformation, the allowable cladding temperature does not exceed 2200°F.

B. Controls and instrumentation, with precision and reliability, initiate and control the ECCS with sufficient timeliness to prevent no more than a small fraction of the core from approaching temperatures at which a gross release of fission products occurs.

C. To meet the precision requirements of safety design bases A and B, the controls and instrumentation respond to conditions that indicate the potential inadequacy of core cooling, regardless of the physical location of the defect causing the inadequacy.

D. To place limits on the degree to which safety is dependent on operator judgment in time of stress, the following safety design bases are specified:

1. Appropriate response of the ECCS is initiated automatically by control systems so that no decision or manipulation of controls is required of plant operations personnel.

2. Intelligence of the response of the ECCS is provided to the operator by main control room (MCR) instrumentation so that faults in the actuation of safety equipment can be diagnosed.

3. Facilities for manual actuation of the ECCS are provided in the MCR so that operator judgment and action is possible, yet administratively reserved for the remedy of a deficiency in the automatic actuation of the safety equipment.

E. To meet the reliability requirements of safety design bases A and B, the following safety design bases are specified:

1. No single failure, maintenance, calibration, or test operation prevents the integrated ECCS operations from providing adequate core cooling.

2. Any installed means of manually interrupting ECCS availability is under the physical control of the MCR operator or other supervisory personnel.

3. The power supplies for ECCS controls and instrumentation are chosen so that core cooling can be accomplished concurrently with a loss-of-offsite auxiliary ac power.

4. The physical events that accompany a loss-of-coolant accident (LOCA) will not interfere with the ability of ECCS controls and instrumentation to function properly.

5. Earthquake ground motion will not impair the ability of the control and instrumentation of the essential ECCS to function properly.

F. To provide the operator with the means to verify ECCS availability, it is possible to test the responses of

TABLE OF CONTENTS

			Page
Appendix I	REACTOR PRESSURE VESSEL REPORT		I.1-1
I.1	Design and Fabrication Requirements		I.1-1
	Exhibit I	Manufacturer's Data Report and Vessel Certification	I.1-3
	Exhibit II	Summary Stress Report	I.1-11
	Exhibit III	Seismic Analysis of Reactor Vessel	I.1-39

LIST OF FIGURES

Figure No.	Figure Title
I.1-1	Vessel Assembly
I.1-2	General Arrangement - Elevation
I.1-3	General Arrangement - Plan
I.1-4	Recirculation Nozzle Details
I.1-5	Feedwater, Steam, and Core Spray Nozzle Details
I.1-6	Miscellaneous Nozzle Details

Lewis Sumner
Vice President
Hatch Project Support

Southern Nuclear Operating Company, Inc.
40 Inverness Parkway
Post Office Box 1295
Birmingham, Alabama 35201

Tel 205.992.7279
Fax 205.992.0341

SOUTHERN COMPANY
Energy to Serve Your World℠

March 31, 2000

Docket Nos. 50-321
50-366

HL-5919

U.S. Nuclear Regulatory Commission
ATTN: Document Control Desk
Washington, D.C. 20555

Edwin I. Hatch Nuclear Plant
FSAR Amendment

Ladies and Gentlemen:

In accordance with the provisions of 10 CFR 50.71, Southern Nuclear Operating Company (SNC) hereby submits 1 signed original and 10 copies of this amendment to the Final Safety Analysis Reports (FSARs) (Revision 18B) for Plant Hatch Units 1 and 2.

Enclosed FSAR amendment 18B primarily consists of changes to improve the accuracy, completeness, and quality of the FSARs consistent with the requirements of 10 CFR 50.71. These changes were prepared as part of the ongoing Plant Hatch FSAR upgrade program.

In accordance with NEI 98-03 Revision 1, section A6, SNC hereby reports the following substantial information removed from the Unit 1 and Unit 2 FSARs in amendment 18B. Unit 1 FSAR Appendix G, Plant Nuclear Safety Operational Analysis, and Unit 2 FSAR Supplement 15C, Nuclear Safety Operational Analysis (NSOA), have been combined, with redundant information removed. As such, Unit 1 FSAR Appendix G is deleted in its entirety and the combined NSOA is contained in Unit 2 FSAR Supplement 15C. This change is consistent with the virtually identical system designs, and similar thermal-hydraulic and transient behavior characteristics of the two units.

In accordance with 10 CFR 50.71(e), Mr. H. L. Sumner, Jr. states he is a Vice President of Southern Nuclear Operating Company and is authorized to execute this oath on behalf of Southern Nuclear Operating Company, and to the best of his knowledge and belief, the information contained in the enclosed FSAR amendment accurately presents changes made since the previous submittal, necessary to reflect information and analyses submitted to the Commission or prepared pursuant to Commission requirements.

Respectfully submitted,

Lewis Sumner

H. L. Sumner, Jr.

Sworn to and subscribed before me this 31st *day of* March *2000.*

Elaine E. Bolton *My commission expires:* 5-25-2003
Notary Public

CLT/eb

Enclosures:
1. Plant Hatch Unit 1 FSAR Amendment 18B
2. Plant Hatch Unit 2 FSAR Amendment 18B

cc: Southern Nuclear Operating Company (w/o enclosures)
Mr. P. H. Wells, Nuclear Plant General Manager
SNC Document Management (R-Type A02.001)

U. S. Nuclear Regulatory Commission, Washington, D. C.
Mr. L. N. Olshan, Licensing Project Manager - Hatch

U. S. Nuclear Regulatory Commission, Region II
Mr. L. A. Reyes, Regional Administrator
Mr. J. T. Munday, Senior Resident Inspector - Hatch

State of Georgia (w/o enclosures)
Mr. L.C. Barrett, Commissioner - Department of Natural Resources

HNP-2 INSERTION INSTRUCTIONS
FOR
REVISION 18B

PAGE	INSTRUCTION
Active Page List (all pages)	Replace
Summary Table of Contents	
p. xxv/xxvi	Replace
p. lxxi thru lxxxi	Replace
Deletions sheet for figure1.2-6	Remove
*Deletion sheet for table 2.3-6	
Deletion sheet for table 2.3-8 (all sheets)	Remove
p. 3.4-1/2	Replace
Deletion sheet for figure 3.6-15	Remove
Deletion sheet for figures 3.6-21 thru 3.6-30	Remove
Deletion sheet for figures 3.6-39 thru 3.6-53	Remove
Deletion sheet for figure 3.7B-2	Remove
Deletion sheet for table 3.8-1	Remove
Deletion sheet for tables 3.8-5 thru 3.8-7	Remove
Deletion sheet for tables 3.8B-2, 3.8B-3	Remove
Deletion sheet for figures 3.8B-1 thru 3.8B-12	Remove
Deletion sheet for figure 3.9-3	Remove
f. 4.2-6	Replace
Deletion sheet for table 5.2-3 (all sheets)	Remove
f. 5.2-5	Replace
Deletion sheet for table 5.5-2	Remove
Deletion sheet for figure 5.5-13	Remove
Deletion sheet for figure 5.5-18	Remove
p. 6.2-51/52	Replace
Deletion sheet for figure 6.2-34	Remove
Deletion sheet for figure 6A-48	Remove
Chapter 7 Table of Contents	
p. iii/iv	Replace
p. xi/xii	Replace
Deletion sheet for table 7.3-10	Remove
Deletion sheets for figures 7.6-12 and 7.6-13	Remove
f 7.7-1 (sheet 7)	Remove
f. 8.3-1	Replace
f. 8.3-11 (sheet 4)	Replace
Deletion sheet for figure 9.1-5	Remove
Deletion sheet for figure 9.3-1 (sheet 3)	Remove
f. 11.2-1 (sheet 6)	Replace
Deletion sheet for figures 11.2-2 thru 11.2-7	Remove
Deletion sheet for figure 11.5-2	Remove
Chapter 12 Table of Contents	

* If you have a deletion sheet for this table in your copy, please remove. If there is not a deletion sheet for this table in your copy, do nothing.

HNP-2 INSERTION INSTRUCTIONS
FOR
REVISION 18B

PAGE	INSTRUCTION
p. i/ii	Replace
p. 12.3-11/12	Replace
Deletion sheet for figure 12.3-16	Remove
Deletion sheet for table 13.1-1	Remove
Deletion sheet for figure 13.1-1	Remove
Deletion sheet for figure 13.1-5	Remove
Deletion sheet for tables 13.5-1 thru 13.5-10	Remove
Chapter 15 Table of Contents	
p ix thru xxii	Remove
p. 15.1-3/4	Replace
p. 15.1-5/6	Replace
p. 15.1-9/10	Replace
p. 15.1-21/22	Replace
t. 15.1-3 (sheet 6)	Replace
p. 15.4-21/22	Replace
p. 15.4-41/42	Replace
Supplement 15A Table of Contents	
p. i thru vi	Insert behind Supplement 15A tab
Deletion sheet for figure 15A-29	Remove
Supplement 15A.A Table of Contents	
p. i	Insert behind Supplement 15A.A Tab
tab Supplement 15B	Remove
p. 15B-1 thru 15B-10	Remove
Supplement 15C Table of Contents	
p. i thru vii	Insert behind Supplement 15C tab
p. 15C-1 thru 15C-46	Remove
p. 15C-1 thru 15C-73	Insert
t. 15C-1 thru 15C-2 (all sheets)	Remove
t. 15C-1 thru 15C-10 (all sheets)	Insert
f. 15C-1 thru 15C-36	Remove
f. 15C-1 thru 15C-53 (all sheets)	Insert
tab Supplement 17A	Remove
p. 17A-1 thru 17A-7	Remove
tab Supplement 17B	Remove
p. 17B-1 thru 17B-10	Remove
tab Supplement 17C	Remove
p. 17C-1	Remove
tab Supplement 17D	Remove
p. 17D-1 thru 17D-3	Remove
p. 17.2A-1/2	Replace

HNP-2 INSERTION INSTRUCTIONS
FOR
REVISION 18B

PAGE	INSTRUCTION
Deletion sheet for table A.38-1 (all sheets)	Remove
Revision 18B Tab	Insert
SNC Letter	Insert behind 18B tab
These Instructions	Insert behind SNC Letter
Acknowledgement Receipt	Sign & Return

EDWIN I. HATCH NUCLEAR PLANT - UNIT 2
FSAR UPDATE REVISION 18B

ACTIVE PAGE LISTING

All pages of the Edwin I. Hatch FSAR Update-Unit 2 are Revision 0 7/82, Revision 1 7/83, Revision 2 7/84, Revision 3 7/85, Revision 4 7/86, Revision 5 7/87, Revision 6 7/88, Revision 7 7/89, Revision 8 7/90, Revision 9A 10/90, Revision 9B 1/91, Revision 9C 7/91, Revision 10A 10/91, Revision 10B 2/92, Revision 10C 7/92, Revision 11A 10/92, Revision 11B 1/93, Revision 11C 4/93, Revision 11D 7/93, Revision 12A 10/93, Revision 12B 1/94, Revision 12C 4/94, Revision 12D 7/94, Revision 13A 10/94, Revision 13B 1/95, Revision 13C 4/95, Revision 13D 7/95, Revision 14A 10/95, Revision 14B 1/96, Revision 14C 4/96, Revision 14D 7/96, Revision 15A 2/97, Revision 15B 7/97, Revision 16 7/98, Revision 17A 1/99, Revision 17B 7/99, Revision 18A 01/00 or Revision 18B 03/00.

p. i (Rev. 18A)
p. ii (Rev. 18A)
p. iii (Rev. 18A)
p. iv (Rev. 18A)
p. v (Rev. 18A)
p. vi (Rev. 18A)
p. vii (Rev. 18A)
p. viii (Rev. 18A)
p. ix (Rev. 128A)
p. x (Rev. 18A)
p. xi (Rev. 18A)
p. xii (Rev. 18A)
p. xiii (Rev. 18A)
p. xiv (Rev. 18A)
p. xv (Rev. 18A)
p. xvi (Rev. 18A)
p. xvii (Rev. 18A)
p. xviii (Rev. 18A)
p. xix (Rev. 18A)
p. xx (Rev. 18A)
p. xxi (Rev. 18A)
p. xxii (Rev. 18A)
p. xxiii (Rev. 18A)
p. xxiv (Rev. 18A)
p. xxv (Rev. 18A)
p. xxvi (Rev. 18B)
p. xxvii (Rev. 18A)
p. xxviii (Rev. 18A)
p. xxix (Rev. 18A)
p. xxx (Rev. 18A)
p. xxxi (Rev. 18A)
p. xxxii (Rev. 18A)
p. xxxiii (Rev. 18A)
p. xxxiv (Rev. 18A)
p. xxxv (Rev. 18A)
p. xxxvi (Rev. 18A)
p. xxxvii (Rev. 18A)
p. xxxviii (Rev. 18A)
p. xxxix (Rev. 18A)
p. xl (Rev. 18A)
p. xli (Rev. 18A)
p. xlii (Rev. 18A)
p. xliii (Rev. 18A)
p. xliv (Rev. 18A)
p. xlv (Rev. 18A)
p. xlvi (Rev. 18A)
p. xlvii (Rev. 18A)
p. xlviii (Rev. 18A)
p. xlix (Rev. 18A)
p. l (Rev. 18A)
p. li (Rev. 18A)
p. lii (Rev. 18A)
p. liii (Rev. 18A)
p. liv (Rev. 18A)
p. lv (Rev. 18A)
p. lvi (Rev. 18A)
p. lvii (Rev. 18A)
p. lviii (Rev. 18A)
p. lix (Rev. 18A)
p. lx (Rev. 18A)
p. lxi (Rev. 18A)
p. lxii (Rev. 18A)
p. lxiii (Rev. 18A)
p. lxiv (Rev. 18A)
p. lxv (Rev. 18A)
p. lxvi (Rev. 18A)
p. lxvii (Rev. 18A)
p. lxviii (Rev. 18A)
p. lxix (Rev. 18A)
p. lxx (Rev. 18A)

p. lxxi (Rev. 18A)
p. lxxii (Rev. 18B)
p. lxxiii (Rev. 18B)
p. lxxiv (Rev. 18B)
p. lxxv (Rev. 18B)
p. lxxvi (Rev. 18B)
p. lxxvii (Rev. 18B)
p. lxxviii (Rev. 18B)
p. lxxix (Rev. 18A)
p. lxxx (Rev. 18B)
p. lxxxi (Rev. 18B)
p. i (chapter 1) (Rev. 18A)
p. ii (chapter 1) (Rev. 18A)
p. iii (chapter 1) (Rev. 18A)
p. iv (chapter 1) (Rev. 18A)
p. v (chapter 1) (Rev. 18A)
p. vi (chapter 1) (Rev. 18A)
p. vii (chapter 1) (Rev. 18A)
p. 1.1-1 (Rev. 17B)
p. 1.1-2 (Rev. 17B)
p. 1.1-3 (Rev. 18A)
p. 1.1-4 (Rev. 18A)
p. 1.1-5 (Rev. 18A)
t. 1.1-1 (sheet 1) (Rev. 18A)
t. 1.1-1 (sheet 2) (Rev. 18A)
t. 1.1-1 (sheet 3) (Rev. 18A)
t. 1.1-1 (sheet 4) (Rev. 18A)
t. 1.1-1 (sheet 5) (Rev. 18A)
t. 1.1-1 (sheet 6) (Rev. 18A)
t. 1.1-1 (sheet 7) (Rev. 18A)
t. 1.1-1 (sheet 8) (Rev. 18A)
t. 1.1-1 (sheet 9) (Rev. 18A)
t. 1.1-1 (sheet 10) (Rev. 18A)
t. 1.1-1 (sheet 11) (Rev. 18A)
t. 1.1-1 (sheet 12) (Rev. 18A)
t. 1.1-1 (sheet 13) (Rev. 18A)
t. 1.1-1 (sheet 14) (Rev. 18A)
t. 1.1-1 (sheet 15) (Rev. 18A)
t. 1.1-1 (sheet 16) (Rev. 18A)
t. 1.1-1 (sheet 17) (Rev. 18A)
t. 1.1-1 (sheet 18) (Rev. 18A)
t. 1.1-1 (sheet 19) (Rev. 18A)
t. 1.1-1 (sheet 20) (Rev. 18A)
t. 1.1-1 (sheet 21) (Rev. 18A)
t. 1.1-1 (sheet 22) (Rev. 18A)
p. 1.2-1 (Rev. 18A)
p. 1.2-2 (Rev. 2)
p. 1.2-3 (Rev. 2)
p. 1.2-4 (Rev. 18A)
p. 1.2-5 (Rev. 18A)
p. 1.2-6 (Rev. 18A)
p. 1.2-7 (Rev. 18A)
p. 1.2-8 (Rev. 18A)
p. 1.2-9 (Rev. 18A)
p. 1.2-10 (Rev. 16)
p. 1.2-11 (Rev. 18A)
p. 1.2-12 (Rev. 18A)
p. 1.2-13 (Rev. 18A)
p. 1.2-14 (Rev. 18A)
p. 1.2-15 (Rev. 18A)
p. 1.2-16 (Rev. 18A)
p. 1.2-17 (Rev. 18A)
p. 1.2-18 (Rev. 18A)
p. 1.2-19 (Rev. 18A)
p. 1.2-20 (Rev. 18A)
p. 1.2-21 (Rev. 18A)
p. 1.2-22 (Rev. 18A)
p. 1.2-23 (Rev. 18A)
p. 1.2-24 (Rev. 18A)
p. 1.2-25 (Rev. 18A)
p. 1.2-26 (Rev. 18A)
p. 1.2-27 (Rev. 18A)
p. 1.2-28 (Rev. 18A)
p. 1.2-29 (Rev. 18A)
p. 1.2-30 (Rev. 18A)
t. 1.2-1 (Rev. 18A)
t. 1.2-2 (Rev. 17B)
f. 1.2-1 (Rev. 18A)
f. 1.2-2 (Rev. 15B)
f. 1.2-3 (Rev. 17B)
f. 1.2-4 (Rev. 17B)
f. 1.2-5 (Rev. 0)
f. 1.2-7 (Rev. 17B)
f. 1.2-8 (Rev. 17B)
f. 1.2-9 (Rev. 17B)
f. 1.2-10 (Rev. 17B)
p. 1.3-1 (Rev. 18A)
p. 1.3-2 (Rev. 18A)
t. 1.3-1 (sheet 1) (Rev. 15B)
t. 1.3-1 (sheet 2) (Rev. 15B)
t. 1.3-1 (sheet 3) (Rev. 15B)
t. 1.3-1 (sheet 4) (Rev. 15B)
t. 1.3-1 (sheet 5) (Rev. 15B)
t. 1.3-1 (sheet 6) (Rev. 15B)
t. 1.3-1 (sheet 7) (Rev. 15B)
t. 1.3-1 (sheet 8) (Rev. 15B)
t. 1.3-1 (sheet 9) (Rev. 15B)
t. 1.3-1 (sheet 10) (Rev. 15B)
t. 1.3-1 (sheet 11) (Rev. 15B)
t. 1.3-1 (sheet 12) (Rev. 15B)
t. 1.3-2 (sheet 1) (Rev. 0)
t. 1.3-2 (sheet 2) (Rev. 11B)
t. 1.3-2 (sheet 3) (Rev. 0)
t. 1.3-2 (sheet 4) (Rev. 0)

p. 1.4-1 (Rev. 15B)
p. 1.4-2 (Rev. 15B)
p. 1.4-3 (Rev. 15B)
p. 1.4-4 (Rev. 17A)
p. 1.4-5 (Rev. 15B)
p. 1.5-1 (Rev. 0)
p. 1.5-2 (Rev. 0)
p. 1.6-1 (Rev. 18A)
t. 1.6-1 (sheet 1) (Rev. 18A)
t. 1.6-1 (sheet 2) (Rev. 18A)
t. 1.6-1 (sheet 3) (Rev. 18A)
t. 1.6-1 (sheet 4) (Rev. 18A)
t. 1.6-1 (sheet 5) (Rev. 18A)
p. i (chapter 2) (Rev. 18A)
p. ii (chapter 2) (Rev. 18A)
p. iii (chapter 2) (Rev. 18A)
p. iv (chapter 2) (Rev. 18A)
p. v (chapter 2) (Rev. 18A)
p. vi (chapter 2) (Rev. 18A)
p. vii (chapter 2) (Rev. 18A)
p. viii (chapter 2) (Rev. 18A)
p. ix (chapter 2) (Rev. 9A)
p. x (chapter 2) (Rev. 9A)
p. xi (chapter 2) (Rev. 9A)
p. xii (chapter 2) (Rev. 9A)
p. xiii (chapter 2) (Rev. 9A)
p. xiv (chapter 2) (Rev. 9A)
p. xv (chapter 2) (Rev. 9A)
p. xvi (chapter 2) (Rev. 9A)
p. xvii (chapter 2) (Rev. 9A)
p. xviii (chapter 2) (Rev. 9A)
p. xix (chapter 2) (Rev. 9A)
p. xx (chapter 2) (Rev. 9A)
p. xxi (chapter 2) (Rev. 9A)
p. xxii (chapter 2) (Rev. 9A)
p. xxiii (chapter 2) (Rev. 9A)
p. 2.1-1 (Rev. 14D)
p. 2.1-2 (Rev. 15B)
p. 2.1-3 (Rev. 14D)
p. 2.1-4 (Rev. 17A)
p. 2.1-5 (Rev. 17A)
p. 2.1-6 (Rev. 17A)
p. 2.1-7 (Rev. 0)
f. 2.1-1 (Rev. 0)
f. 2.1-2 (Rev. 0)
f. 2.1-3 (Rev. 9C)
f. 2.1-4 (Rev. 17A)
f. 2.1-5 (Rev. 17A)
f. 2.1-6 (Rev. 0)
p. 2.2-1 (Rev. 0)
p. 2.2-2 (Rev. 17A)
p. 2.2-3 (Rev. 0)
p. 2.2-4 (Rev. 11D)
p. 2.2-5 (Rev. 11D)
p. 2.2-6 (Rev. 11D)
p. 2.2-7 (Rev. 11D)
p. 2.2-8 (Rev. 0)
f. 2.2-1 (Rev. 0)
p. 2.3-1 (Rev. 18A)
p. 2.3-2 (Rev. 0)
p. 2.3-3 (Rev. 0)
p. 2.3-4 (Rev. 1)
p. 2.3-5 (Rev. 1)
p. 2.3-6 (Rev. 0)
p. 2.3-7 (Rev. 0)
p. 2.3-8 (Rev. 0)
p. 2.3-9 (Rev. 18A)
p. 2.3-10 (Rev. 18A)
p. 2.3-11 (Rev. 18A)
p. 2.3-12 (Rev. 18A)
p. 2.3-13 (Rev. 18A)
p. 2.3-14 (Rev. 18A)
p. 2.3-15 (Rev. 18A)
p. 2.3-16 (Rev. 18A)
p. 2.3-17 (Rev. 18A)
p. 2.3-18 (Rev. 18A)
p. 2.3-19 (Rev. 18A)
p. 2.3-20 (Rev. 18A)
p. 2.3-21 (Rev. 18A)
p. 2.3-22 (Rev. 18A)
p. 2.3-23 (Rev. 18A)
p. 2.3-24 (Rev. 18A)
p. 2.3-25 (Rev. 18A)
p. 2.3-26 (Rev. 18A)
p. 2.3-27 (Rev. 18A)
p. 2.3-28 (Rev. 18A)
p. 2.3-29 (Rev. 18A)
t. 2.3-1 (Rev. 12D)
t. 2.3-2 (Rev. 12D)
t. 2.3-3 (sheet 1) (Rev. 0)
t. 2.3-3 (sheet 2) (Rev. 0)
t. 2.3-4 (Rev. 0)
t. 2.3-5 (Rev. 0)
t. 2.3-7 (sheet 1) (Rev. 3)
t. 2.3-7 (sheet 2) (Rev. 3)
t. 2.3-7 (sheet 3) (Rev. 3)
t. 2.3-7 (sheet 4) (Rev. 3)
t. 2.3-9 (sheet 1) (Rev. 0)
t. 2.3-9 (sheet 2) (Rev. 0)
t. 2.3-9 (sheet 3) (Rev. 0)
t. 2.3-9 (sheet 4) (Rev. 0)
t. 2.3-10 (sheet 1) (Rev. 0)
t. 2.3-10 (sheet 2) (Rev. 0)
t. 2.3-10 (sheet 3) (Rev. 0)

t. 2.3-10 (sheet 4) (Rev. 0)
t. 2.3-11 (Rev. 1)
t. 2.3-12 (Rev. 0)
t. 2.3-13 (sheet 1) (Rev. 18A)
t. 2.3-13 (sheet 2) (Rev. 18A)
t. 2.3-13 (sheet 3) (Rev. 18A)
t. 2.3-13 (sheet 4) (Rev. 18A)
t. 2.3-14 (sheet 1) (Rev. 18A)
t. 2.3-14 (sheet 2) (Rev. 18A)
t. 2.3-14 (sheet 3) (Rev. 18A)
t. 2.3-14 (sheet 4) (Rev. 18A)
t. 2.3-15 (sheet 1) (Rev. 18A)
t. 2.3-15 (sheet 2) (Rev. 18A)
t. 2.3-15 (sheet 3) (Rev. 18A)
t. 2.3-15 (sheet 4) (Rev. 18A)
t. 2.3-15 (sheet 5) (Rev. 18A)
t. 2.3-15 (sheet 6) (Rev. 18A)
t. 2.3-15 (sheet 7) (Rev. 18A)
t. 2.3-15 (sheet 8) (Rev. 18A)
t. 2.3-15 (sheet 9) (Rev. 18A)
t. 2.3-15 (sheet 10) (Rev. 18A)
t. 2.3-15 (sheet 11) (Rev. 18A)
t. 2.3-15 (sheet 12) (Rev. 18A)
t. 2.3-15 (sheet 13) (Rev. 18A)
t. 2.3-15 (sheet 14) (Rev. 18A)
t. 2.3-15 (sheet 15) (Rev. 18A)
t. 2.3-15 (sheet 16) (Rev. 18A)
t. 2.3-15 (sheet 17) (Rev. 18A)
t. 2.3-15 (sheet 18) (Rev. 18A)
t. 2.3-15 (sheet 19) (Rev. 18A)
t. 2.3-15 (sheet 20) (Rev. 18A)
t. 2.3-15 (sheet 21) (Rev. 18A)
t. 2.3-15 (sheet 22) (Rev. 18A)
t. 2.3-15 (sheet 23) (Rev. 18A)
t. 2.3-15 (sheet 24) (Rev. 18A)
t. 2.3-15 (sheet 25) (Rev. 18A)
t. 2.3-15 (sheet 26) (Rev. 18A)
t. 2.3-15 (sheet 27) (Rev. 18A)
t. 2.3-15 (sheet 28) (Rev. 18A)
t. 2.3-15 (sheet 29) (Rev. 18A)
t. 2.3-15 (sheet 30) (Rev. 18A)
t. 2.3-15 (sheet 31) (Rev. 18A)
t. 2.3-15 (sheet 32) (Rev. 18A)
t. 2.3-15 (sheet 33) (Rev. 18A)
t. 2.3-15 (sheet 34) (Rev. 18A)
t. 2.3-15 (sheet 35) (Rev. 18A)
t. 2.3-15 (sheet 36) (Rev. 18A)
t. 2.3-15 (sheet 37) (Rev. 18A)
t. 2.3-15 (sheet 38) (Rev. 18A)
t. 2.3-15 (sheet 39) (Rev. 18A)
t. 2.3-15 (sheet 40) (Rev. 18A)
t. 2.3-15 (sheet 41) (Rev. 18A)
t. 2.3-15 (sheet 42) (Rev. 18A)
t. 2.3-15 (sheet 43) (Rev. 18A)
t. 2.3-15 (sheet 44) (Rev. 18A)
t. 2.3-15 (sheet 45) (Rev. 18A)
t. 2.3-15 (sheet 46) (Rev. 18A)
t. 2.3-15 (sheet 47) (Rev. 18A)
t. 2.3-15 (sheet 48) (Rev. 18A)
t. 2.3-16 (sheet 1) (Rev. 18A)
t. 2.3-16 (sheet 2) (Rev. 18A)
t. 2.3-16 (sheet 3) (Rev. 18A)
t. 2.3-16 (sheet 4) (Rev. 18A)
t. 2.3-16 (sheet 5) (Rev. 18A)
t. 2.3-16 (sheet 6) (Rev. 18A)
t. 2.3-16 (sheet 7) (Rev. 18A)
t. 2.3-16 (sheet 8) (Rev. 18A)
t. 2.3-16 (sheet 9) (Rev. 18A)
t. 2.3-16 (sheet 10) (Rev. 18A)
t. 2.3-16 (sheet 11) (Rev. 18A)
t. 2.3-16 (sheet 12) (Rev. 18A)
t. 2.3-16 (sheet 13) (Rev. 18A)
t. 2.3-16 (sheet 14) (Rev. 18A)
t. 2.3-16 (sheet 15) (Rev. 18A)
t. 2.3-16 (sheet 16) (Rev. 18A)
t. 2.3-16 (sheet 17) (Rev. 18A)
t. 2.3-16 (sheet 18) (Rev. 18A)
t. 2.3-16 (sheet 19) (Rev. 18A)
t. 2.3-16 (sheet 20) (Rev. 18A)
t. 2.3-16 (sheet 21) (Rev. 18A)
t. 2.3-16 (sheet 22) (Rev. 18A)
t. 2.3-16 (sheet 23) (Rev. 18A)
t. 2.3-16 (sheet 24) (Rev. 18A)
t. 2.3-16 (sheet 25) (Rev. 18A)
t. 2.3-16 (sheet 26) (Rev. 18A)
t. 2.3-16 (sheet 27) (Rev. 18A)
t. 2.3-16 (sheet 28) (Rev. 18A)
t. 2.3-16 (sheet 29) (Rev. 18A)
t. 2.3-16 (sheet 30) (Rev. 18A)
t. 2.3-16 (sheet 31) (Rev. 18A)
t. 2.3-16 (sheet 32) (Rev. 18A)
t. 2.3-16 (sheet 33) (Rev. 18A)
t. 2.3-16 (sheet 34) (Rev. 18A)
t. 2.3-16 (sheet 35) (Rev. 18A)
t. 2.3-16 (sheet 36) (Rev. 18A)
t. 2.3-16 (sheet 37) (Rev. 18A)
t. 2.3-16 (sheet 38) (Rev. 18A)
t. 2.3-16 (sheet 39) (Rev. 18A)
t. 2.3-16 (sheet 40) (Rev. 18A)
t. 2.3-16 (sheet 41) (Rev. 18A)
t. 2.3-16 (sheet 42) (Rev. 18A)
t. 2.3-16 (sheet 43) (Rev. 18A)
t. 2.3-16 (sheet 44) (Rev. 18A)
t. 2.3-16 (sheet 45) (Rev. 18A)

t. 2.3-16 (sheet 46) (Rev. 18A)
t. 2.3-16 (sheet 47) (Rev. 18A)
t. 2.3-16 (sheet 48) (Rev. 18A)
t. 2.3-17 (Rev. 18A)
t. 2.3-18 (Rev. 18A)
t. 2.3-19 (Rev. 18A)
t. 2.3-20 (Rev. 18A)
t. 2.3-21 (Rev. 18A)
t. 2.3-22 (Rev. 18A)
t. 2.3-23 (sheet 1) (Rev. 18A)
t. 2.3-23 (sheet 2) (Rev. 18A)
t. 2.3-24 (sheet 1) (Rev. 18A)
t. 2.3-24 (sheet 2) (Rev. 18A)
t. 2.3-25 (Rev. 18A)
f. 2.3-1 (Rev. 0)
f. 2.3-2 (Rev. 0)
f. 2.3-3 (Rev. 0)
f. 2.3-4 (Rev. 0)
f. 2.3-5 (Rev. 0)
f. 2.3-6 (Rev. 0)
f. 2.3-7 (Rev. 0)
f. 2.3-8 (Rev. 0)
f. 2.3-9 (Rev. 0)
f. 2.3-10 (Rev. 0)
f. 2.3-11 (Rev. 0)
f. 2.3-12 (sheet 1) (Rev. 0)
f. 2.3-12 (sheet 2) (Rev. 0)
f. 2.3-12 (sheet 3) (Rev. 0)
f. 2.3-12 (sheet 4) (Rev. 0)
f. 2.3-12 (sheet 5) (Rev. 0)
f. 2.3-12 (sheet 6) (Rev. 0)
f. 2.3-12 (sheet 7) (Rev. 0)
f. 2.3-12 (sheet 8) (Rev. 0)
f. 2.3-13 (Rev. 3)
f. 2.3-14 (Rev. 0)
f. 2.3-15 (sheet 1) (Rev. 0)
f. 2.3-15 (sheet 2) (Rev. 0)
f. 2.3-15 (sheet 3) (Rev. 0)
f. 2.3-15 (sheet 4) (Rev. 0)
f. 2.3-16 (Rev. 0)

p. 2.4-1 (Rev. 0)
p. 2.4-2 (Rev. 0)
p. 2.4-3 (Rev. 0)
p. 2.4-4 (Rev. 0)
p. 2.4-5 (Rev. 0)
p. 2.4-6 (Rev. 0)
p. 2.4-7 (Rev. 1)
p. 2.4-8 (Rev. 0)
p. 2.4-9 (Rev. 0)
p. 2.4-10 (Rev. 0)
p. 2.4-11 (Rev. 0)
p. 2.4-12 (Rev. 17A)
p. 2.4-13 (Rev. 0)
p. 2.4-14 (Rev. 0)
p. 2.4-15 (Rev. 0)
p. 2.4-16 (Rev. 0)
p. 2.4-17 (Rev. 0)
p. 2.4-18 (Rev. 0)
p. 2.4-19 (Rev. 11B)
p. 2.4-20 (Rev. 17A)
p. 2.4-20a (Rev. 11B)
p. 2.4-20b (Rev. 11B)
p. 2.4-21 (Rev. 7)
p. 2.4-22 (Rev. 17A)
p. 2.4-23 (Rev. 0)
p. 2.4-24 (Rev. 0)
p. 2.4-25 (Rev. 0)
p. 2.4-26 (Rev. 0)
p. 2.4-27 (Rev. 0)
p. 2.4-28 (Rev. 0)
p. 2.4-29 (Rev. 0)
p. 2.4-30 (Rev. 0)
p. 2.4-31 (Rev. 0)
p. 2.4-32 (Rev. 0)
p. 2.4-33 (Rev. 0)
p. 2.4-34 (Rev. 0)
p. 2.4-35 (Rev. 0)
p. 2.4-36 (Rev. 0)
p. 2.4-37 (Rev. 0)
p. 2.4-38 (Rev. 0)
p. 2.4-39 (Rev. 14D)
p. 2.4-40 (Rev. 0)
p. 2.4-41 (Rev. 0)
t. 2.4-1 (Rev. 0)
t. 2.4-2 (sheet 1) (Rev. 12D)
t. 2.4-2 (sheet 2) (Rev. 12D)
t. 2.4-2 (sheet 3) (Rev. 12D)
t. 2.4-2 (sheet 4) (Rev. 12D)
t. 2.4-2 (sheet 5) (Rev. 12D)
t. 2.4-2 (sheet 6) (Rev. 12D)
t. 2.4-3 (Rev. 0)
t. 2.4-4 (Rev. 0)
t. 2.4-5 (Rev. 0)
t. 2.4-6 (Rev. 0)
t. 2.4-7 (sheet 1) (Rev. 0)
t. 2.4-7 (sheet 2) (Rev. 0)
t. 2.4-8 (sheet 1) (Rev. 0)
t. 2.4-8 (sheet 2) (Rev. 0)
t. 2.4-8 (sheet 3) (Rev. 0)
t. 2.4-9 (Rev. 0)
t. 2.4-10 (Rev. 0)
f. 2.4-1 (Rev. 0)

f. 2.4-2 (Rev. 0)
f. 2.4-3 (Rev. 0)
f. 2.4-4 (Rev. 0)
f. 2.4-5 (Rev. 0)
f. 2.4-6 (Rev. 0)
f. 2.4-7 (Rev. 0)
f. 2.4-8 (Rev. 0)
f. 2.4-9 (Rev. 0)
f. 2.4-10 (Rev. 0)
f. 2.4-11 (Rev. 0)
f. 2.4-12 (Rev. 0)
f. 2.4-13 (Rev. 0)
f. 2.4-14 (Rev. 0)
f. 2.4-15 (Rev. 0)
f. 2.4-16 (Rev. 0)
f. 2.4-17 (Rev. 0)
f. 2.4-18 (Rev. 0)
f. 2.4-19 (Rev. 0)
f. 2.4-20 (Rev. 0)
f. 2.4-21 (Rev. 0)
f. 2.4-22 (Rev. 0)
f. 2.4-23 (Rev. 0)
f. 2.4-24 (Rev. 0)
f. 2.4-25 (Rev. 0)
f. 2.4-26 (Rev. 0)
f. 2.4-27 (Rev. 0)
f. 2.4-28 (Rev. 0)
f. 2.4-29 (Rev. 0)
f. 2.4-30 (Rev. 0)
f. 2.4-31 (Rev. 0)
f. 2.4-32 (Rev. 0)
f. 2.4-33 (Rev. 0)
f. 2.4-34 (Rev. 17A)
f. 2.4-35 (Rev. 0)
f. 2.4-36 (Rev. 0)
f. 2.4-37 (Rev. 0)
f. 2.4-38 (Rev. 0)
f. 2.4-39 (Rev. 0)
f. 2.4-40 (Rev. 0)
f. 2.4-41 (sheet 1) (Rev. 0)
f. 2.4-41 (sheet 2) (Rev. 0)
f. 2.4-41 (sheet 3) (Rev. 0)
f. 2.4-41 (sheet 4) (Rev. 0)
f. 2.4-41 (sheet 5) (Rev. 0)
f. 2.4-41 (sheet 6) (Rev. 0)
f. 2.4-42 (sheet 1) (Rev. 0)
f. 2.4-42 (sheet 2) (Rev. 0)
f. 2.4-42 (sheet 3) (Rev. 0)
f. 2.4-42 (sheet 4) (Rev. 0)
f. 2.4-42 (sheet 5) (Rev. 0)
f. 2.4-42 (sheet 6) (Rev. 0)
f. 2.4-42 (sheet 7) (Rev. 0)
f. 2.4-42 (sheet 8) (Rev. 0)
f. 2.4-42 (sheet 9) (Rev. 0)
f. 2.4-43 (Rev. 0)
p. 2.5-1 (Rev. 0)
p. 2.5-2 (Rev. 0)
p. 2.5-3 (Rev. 0)
p. 2.5-4 (Rev. 0)
p. 2.5-5 (Rev. 0)
p. 2.5-6 (Rev. 1)
p. 2.5-7 (Rev. 0)
p. 2.5-8 (Rev. 0)
p. 2.5-9 (Rev. 0)
p. 2.5-10 (Rev. 0)
p. 2.5-11 (Rev. 0)
p. 2.5-12 (Rev. 0)
p. 2.5-13 (Rev. 0)
p. 2.5-14 (Rev. 0)
p. 2.5-15 (Rev. 0)
p. 2.5-16 (Rev. 0)
p. 2.5-17 (Rev. 0)
p. 2.5-18 (Rev. 0)
p. 2.5-19 (Rev. 0)
p. 2.5-20 (Rev. 0)
p. 2.5-21 (Rev. 0)
p. 2.5-22 (Rev. 0)
p. 2.5-23 (Rev. 0)
p. 2.5-24 (Rev. 0)
p. 2.5-25 (Rev. 0)
p. 2.5-26 (Rev. 0)
p. 2.5-27 (Rev. 0)
p. 2.5-28 (Rev. 0)
p. 2.5-29 (Rev. 0)
p. 2.5-30 (Rev. 0)
p. 2.5-31 (Rev. 0)
p. 2.5-32 (Rev. 1)
p. 2.5-33 (Rev. 0)
p. 2.5-34 (Rev. 0)
p. 2.5-35 (Rev. 0)
p. 2.5-36 (Rev. 0)
p. 2.5-37 (Rev. 0)
p. 2.5-38 (Rev. 0)
p. 2.5-39 (Rev. 0)
p. 2.5-40 (Rev. 0)
p. 2.5-41 (Rev. 0)
p. 2.5-42 (Rev. 0)
p. 2.5-43 (Rev. 0)
p. 2.5-44 (Rev. 0)
p. 2.5-45 (Rev. 0)
p. 2.5-46 (Rev. 0)
p. 2.5-47 (Rev. 0)
p. 2.5-48 (Rev. 0)
p. 2.5-49 (Rev. 0)

p. 2.5-50 (Rev. 0)
p. 2.5-51 (Rev. 0)
p. 2.5-52 (Rev. 0)
p. 2.5-53 (Rev. 0)
p. 2.5-54 (Rev. 0)
p. 2.5-55 (Rev. 0)
p. 2.5-56 (Rev. 0)
p. 2.5-57 (Rev. 0)
p. 2.5-58 (Rev. 0)
p. 2.5-59 (Rev. 0)
p. 2.5-60 (Rev. 0)
p. 2.5-61 (Rev. 0)
p. 2.5-62 (Rev. 0)
p. 2.5-63 (Rev. 0)
t. 2.5-1 (sheet 1) (Rev. 0)
t. 2.5-1 (sheet 2) (Rev. 0)
t. 2.5-1 (sheet 3) (Rev. 0)
t. 2.5-1 (sheet 4) (Rev. 0)
t. 2.5-1 (sheet 5) (Rev. 0)
t. 2.5-1 (sheet 6) (Rev. 0)
t. 2.5-1 (sheet 7) (Rev. 0)
t. 2.5-1 (sheet 8) (Rev. 0)
t. 2.5-1 (sheet 9) (Rev. 0)
t. 2.5-2 (sheet 1) (Rev. 0)
t. 2.5-2 (sheet 2) (Rev. 0)
t. 2.5-2 (sheet 3) (Rev. 0)
t. 2.5-2 (sheet 4) (Rev. 0)
t. 2.5-3 (Rev. 0)
t. 2.5-4 (sheet 1) (Rev. 0)
t. 2.5-4 (sheet 2) (Rev. 0)
t. 2.5-4 (sheet 3) (Rev. 0)
t. 2.5-5 (sheet 1) (Rev. 0)
t. 2.5-5 (sheet 2) (Rev. 0)
t. 2.5-5 (sheet 3) (Rev. 0)
f. 2.5-1 (Rev. 0)
f. 2.5-2 (Rev. 0)
f. 2.5-3 (Rev. 0)
f. 2.5-4 (Rev. 0)
f. 2.5-5 (Rev. 0)
f. 2.5-6 (Rev. 0)
f. 2.5-7 (Rev. 0)
f. 2.5-8 (Rev. 0)
f. 2.5-9 (Rev. 0)
f. 2.5-10 (Rev. 0)
f. 2.5-11 (Rev. 0)
f. 2.5-12 (Rev. 0)
f. 2.5-13 (Rev. 0)
f. 2.5-14 (Rev. 0)
f. 2.5-15 (Rev. 0)
f. 2.5-16 (Rev. 0)
f. 2.5-17 (Rev. 0)
f. 2.5-18 (Rev. 0)
f. 2.5-19 (Rev. 0)
f. 2.5-20 (Rev. 0)
f. 2.5-21 (Rev. 0)
p. 2A-1 (Rev. 0)
p. 2A-2 (Rev. 0)
p. 2A-3 (Rev. 0)
p. 2A-4 (Rev. 0)
p. 2A-5 (Rev. 0)
p. 2A-6 (Rev. 0)
p. 2A-7 (Rev. 0)
p. 2A-8 (Rev. 0)
p. 2A-9 (Rev. 0)
p. 2A-10 (Rev. 0)
p. 2A-11 (Rev. 0)
p. 2A-12 (Rev. 0)
p. 2A-13 (Rev. 0)
p. 2A-14 (Rev. 0)
p. 2A-15 (Rev. 1)
p. 2A-16 (Rev. 0)
p. 2A-17 (Rev. 0)
p. 2A-18 (Rev. 0)
p. 2A-19 (Rev. 0)
p. 2A-20 (Rev. 0)
p. 2A-21 (Rev. 0)
p. 2A-22 (Rev. 0)
p. 2A-23 (Rev. 0)
p. 2A-24 (Rev. 0)
p. 2A-25 (Rev. 0)
p. 2A-26 (Rev. 0)
p. 2A-27 (Rev. 0)
p. 2A-28 (Rev. 0)
p. 2A-29 (Rev. 0)
p. 2A-30 (Rev. 0)
p. 2A-31 (Rev. 0)
p. 2A-32 (Rev. 0)
p. 2A-33 (Rev. 8)
p. 2A-33a (Rev. 8)
p. 2A-33b (Rev. 8)
p. 2A-34 (Rev. 0)
p. 2A-35 (Rev. 0)
p. 2A-36 (Rev. 0)
p. 2A-37 (Rev. 0)
p. 2A-38 (Rev. 8)
p. 2A-39 (Rev. 0)
p. 2A-40 (Rev. 1)
p. 2A-41 (Rev. 0)
p. 2A-42 (Rev. 0)
p. 2A-43 (Rev. 0)
p. 2A-44 (Rev. 0)
p. 2A-45 (Rev. 0)
p. 2A-46 (Rev. 0)
p. 2A-47 (Rev. 0)

p. 2A-48 (Rev. 1)
p. 2A-49 (Rev. 0)
p. 2A-50 (Rev. 0)
p. 2A-51 (Rev. 1)
p. 2A-52 (Rev. 1)
p. 2A-53 (Rev. 0)
p. 2A-54 (Rev. 0)
p. 2A-55 (Rev. 0)
p. 2A-56 (Rev. 0)
p. 2A-57 (Rev. 0)
p. 2A-58 (Rev. 0)
p. 2A-59 (Rev. 0)
t. 2A-1 (sheet 1) (Rev. 0)
t. 2A-1 (sheet 2) (Rev. 0)
t. 2A-1 (sheet 3) (Rev. 0)
t. 2A-1 (sheet 4) (Rev. 0)
t. 2A-1 (sheet 5) (Rev. 0)
t. 2A-2 (sheet 1) (Rev. 0)
t. 2A-2 (sheet 2) (Rev. 0)
t. 2A-3 (Rev. 0)
t. 2A-4 (sheet 1) (Rev. 0)
t. 2A-4 (sheet 2) (Rev. 0)
t. 2A-5 (sheet 1) (Rev. 0)
t. 2A-5 (sheet 2) (Rev. 0)
t. 2A-6 (Rev. 0)
t. 2A-7 (sheet 1) (Rev. 0)
t. 2A-7 (sheet 2) (Rev. 0)
t. 2A-8 (Rev. 17B)
t. 2A-9 (Rev. 0)
t. 2A-10 (sheet 1) (Rev. 0)
t. 2A-10 (sheet 2) (Rev. 0)
t. 2A-11 (Rev. 17B)
t. 2A-12 (Rev. 0)
t. 2A-13 (Rev. 17B)
t. 2A-14 (Rev. 17B)
t. 2A-15 (Rev. 17B)
t. 2A-16 (Rev. 17B)
t. 2A-17 (Rev. 17B)
t. 2A-18 (Rev. 17B)
t. 2A-19 (Rev. 17B)
t. 2A-20 (Rev. 17B)
t. 2A-21 (Rev. 0)
t. 2A-22 (Rev. 0)
t. 2A-23 (sheet 1) (Rev. 0)
t. 2A-23 (sheet 2) (Rev. 0)
t. 2A-24 (Rev. 0)
t. 2A-25 (Rev. 0)
f. 2A-1 (sheet 1) (Rev. 0)
f. 2A-1 (sheet 2) (Rev. 0)
f. 2A-2 (Rev. 0)
f. 2A-3 (sheet 1) (Rev. 0)
f. 2A-3 (sheet 2) (Rev. 0)
f. 2A-3 (sheet 3) (Rev. 0)
f. 2A-3 (sheet 4) (Rev. 0)
f. 2A-3 (sheet 5) (Rev. 0)
f. 2A-3 (sheet 6) (Rev. 0)
f. 2A-3 (sheet 7) (Rev. 0)
f. 2A-4 (Rev. 0)
f. 2A-5 (Rev. 0)
f. 2A-6 (Rev. 0)
f. 2A-7 (Rev. 0)
f. 2A-8 (sheet 1) (Rev. 0)
f. 2A-8 (sheet 2) (Rev. 0)
f. 2A-8 (sheet 3) (Rev. 0)
f. 2A-8 (sheet 4) (Rev. 0)
f. 2A-8 (sheet 5) (Rev. 0)
f. 2A-8 (sheet 6) (Rev. 0)
f. 2A-8 (sheet 7) (Rev. 0)
f. 2A-8 (sheet 8) (Rev. 0)
f. 2A-8 (sheet 9) (Rev. 0)
f. 2A-8 (sheet 10) (Rev. 0)
f. 2A-8 (sheet 11) (Rev. 0)
f. 2A-8 (sheet 12) (Rev. 0)
f. 2A-8 (sheet 13) (Rev. 0)
f. 2A-8 (sheet 14) (Rev. 0)
f. 2A-8 (sheet 15) (Rev. 0)
f. 2A-8 (sheet 16) (Rev. 0)
f. 2A-8 (sheet 17) (Rev. 0)
f. 2A-8 (sheet 18) (Rev. 0)
f. 2A-8 (sheet 19) (Rev. 0)
f. 2A-8 (sheet 20) (Rev. 0)
f. 2A-8 (sheet 21) (Rev. 0)
f. 2A-8 (sheet 22) (Rev. 0)
f. 2A-8 (sheet 23) (Rev. 0)
f. 2A-8 (sheet 24) (Rev. 0)
f. 2A-8 (sheet 25) (Rev. 0)
f. 2A-8 (sheet 26) (Rev. 0)
f. 2A-8 (sheet 27) (Rev. 0)
f. 2A-8 (sheet 28) (Rev. 0)
f. 2A-8 (sheet 29) (Rev. 0)
f. 2A-8 (sheet 30) (Rev. 0)
f. 2A-8 (sheet 31) (Rev. 0)
f. 2A-8 (sheet 32) (Rev. 0)
f. 2A-8 (sheet 33) (Rev. 0)
f. 2A-8 (sheet 34) (Rev. 0)
f. 2A-9 (sheet 1) (Rev. 0)
f. 2A-9 (sheet 2) (Rev. 0)
f. 2A-9 (sheet 3) (Rev. 0)
f. 2A-9 (sheet 4) (Rev. 0)
f. 2A-10 (Rev. 0)
f. 2A-11 (sheet 1) (Rev. 0)
f. 2A-11 (sheet 2) (Rev. 0)
f. 2A-11 (sheet 3) (Rev. 0)
f. 2A-11 (sheet 4) (Rev. 0)

f. 2A-11 (sheet 5) (Rev. 0)
f. 2A-12 (Rev. 0)
f. 2A-13 (Rev. 0)
f. 2A-14 (Rev. 0)
f. 2A-15 (Rev. 0)
f. 2A-16 (Rev. 0)
f. 2A-17 (sheet 1) (Rev. 17B)
f. 2A-17 (sheet 2) (Rev. 17B)
f. 2A-17 (sheet 3) (Rev. 17B)
f. 2A-17 (sheet 4) (Rev. 17B)
f. 2A-17 (sheet 5) (Rev. 17B)
f. 2A-17 (sheet 6) (Rev. 17B)
f. 2A-17 (sheet 7) (Rev. 17B)
f. 2A-18 (sheet 1) (Rev. 17B)
f. 2A-18 (sheet 2) (Rev. 17B)
f. 2A-18 (sheet 3) (Rev. 17B)
f. 2A-19 (Rev. 0)
f. 2A-20 (Rev. 0)
f. 2A-21 (Rev. 0)
f. 2A-22 (sheet 1) (Rev. 0)
f. 2A-22 (sheet 2) (Rev. 0)
f. 2A-23 (Rev. 0)
f. 2A-24 (Rev. 0)
f. 2A-25 (Rev. 1)
f. 2A-26 (Rev. 0)
f. 2A-27 (Rev. 0)
f. 2A-28 (Rev. 0)
f. 2A-29 (sheet 1) (Rev. 0)
f. 2A-29 (sheet 2) (Rev. 0)
f. 2A-29 (sheet 3) (Rev. 0)
f. 2A-29 (sheet 4) (Rev. 0)
f. 2A-29 (sheet 5) (Rev. 0)
f. 2A-29 (sheet 6) (Rev. 0)
f. 2A-29 (sheet 7) (Rev. 0)
f. 2A-29 (sheet 8) (Rev. 0)
f. 2A-29 (sheet 9) (Rev. 0)
f. 2A-29 (sheet 10) (Rev. 0)
f. 2A-29 (sheet 11) (Rev. 0)
f. 2A-29 (sheet 12) (Rev. 0)
f. 2A-29 (sheet 13) (Rev. 0)
f. 2A-30 (Rev. 0)
f. 2A-31 (Rev. 0)
f. 2A-32 (Rev. 0)
f. 2A-33 (Rev. 0)
f. 2A-34 (Rev. 0)
f. 2A-35 (Rev. 0)
f. 2A-36 (Rev. 0)
f. 2A-37 (Rev. 0)
f. 2A-38 (sheet 1) (Rev. 0)
f. 2A-38 (sheet 2) (Rev. 0)
f. 2A-38 (sheet 3) (Rev. 0)
f. 2A-38 (sheet 4) (Rev. 0)
f. 2A-38 (sheet 5) (Rev. 0)
f. 2A-38 (sheet 6) (Rev. 0)
f. 2A-38 (sheet 7) (Rev. 0)
f. 2A-38 (sheet 8) (Rev. 0)
f. 2A-38 (sheet 9) (Rev. 0)
f. 2A-39 (Rev. 0)
f. 2A-40 (Rev. 0)
f. 2A-41 (Rev. 0)
f. 2A-42 (Rev. 0)
f. 2A-43 (Rev. 0)
f. 2A-44 (Rev. 0)
f. 2A-45 (Rev. 0)
f. 2A-46 (Rev. 0)
f. 2A-47 (Rev. 0)
f. 2A-48 (Rev. 0)
f. 2A-49 (Rev. 0)
f. 2A-50 (Rev. 0)
f. 2A-51 (Rev. 0)
f. 2A-52 (Rev. 0)
f. 2A-53 (Rev. 0)
f. 2A-54 (Rev. 0)
f. 2A-55 (Rev. 0)
f. 2B-1 (Rev. 0)
f. 2B-2 (Rev. 0)
f. 2B-3 (Rev. 0)
f. 2B-4 (Rev. 0)
f. 2B-5 (Rev. 0)
f. 2B-6 (Rev. 0)
f. 2B-7 (Rev. 0)
f. 2B-8 (Rev. 0)
f. 2B-9 (Rev. 0)
f. 2B-10 (Rev. 0)
f. 2B-11 (Rev. 0)
f. 2B-12 (Rev. 0)
f. 2B-13 (Rev. 0)
f. 2B-14 (Rev. 0)
f. 2B-15 (Rev. 0)
f. 2B-16 (Rev. 0)
f. 2B-17 (Rev. 0)
f. 2B-18 (Rev. 0)
f. 2B-19 (Rev. 0)
f. 2B-20 (Rev. 0)
f. 2B-21 (Rev. 0)
f. 2B-22 (Rev. 0)
f. 2B-23 (Rev. 0)
f. 2B-24 (Rev. 0)
f. 2B-25 (Rev. 0)
f. 2B-26 (Rev. 0)
f. 2B-27 (Rev. 0)
f. 2B-28 (Rev. 0)
f. 2B-29 (Rev. 0)
f. 2B-30 (Rev. 0)

f. 2B-31 (Rev. 0)
f. 2B-32 (Rev. 0)
f. 2B-33 (Rev. 0)
f. 2B-34 (Rev. 0)
f. 2B-35 (Rev. 0)
f. 2B-36 (Rev. 0)
f. 2B-37 (Rev. 0)
f. 2B-38 (Rev. 0)
f. 2B-39 (Rev. 0)
f. 2B-40 (Rev. 0)
f. 2B-41 (Rev. 0)
f. 2B-42 (Rev. 0)
f. 2B-43 (Rev. 0)
f. 2B-44 (Rev. 0)
f. 2B-45 (Rev. 0)
f. 2B-46 (Rev. 0)
f. 2B-47 (Rev. 0)
f. 2B-48 (Rev. 0)
f. 2B-49 (Rev. 0)
f. 2B-50 (Rev. 0)
f. 2B-51 (Rev. 0)
f. 2B-52 (Rev. 0)
f. 2B-53 (Rev. 0)
f. 2B-54 (Rev. 0)
f. 2B-55 (Rev. 0)
f. 2B-56 (Rev. 0)
f. 2B-57 (Rev. 0)
f. 2B-58 (Rev. 0)
f. 2B-59 (Rev. 0)
f. 2B-60 (Rev. 0)
f. 2B-61 (Rev. 0)
f. 2B-62 (Rev. 0)
f. 2B-63 (Rev. 0)
f. 2B-64 (Rev. 0)
f. 2B-65 (Rev. 0)
f. 2B-66 (Rev. 0)
f. 2B-67 (Rev. 0)
f. 2B-68 (Rev. 0)
f. 2B-69 (Rev. 0)
f. 2B-70 (Rev. 0)
f. 2B-71 (Rev. 0)
f. 2B-72 (Rev. 0)
f. 2B-73 (Rev. 0)
f. 2B-74 (Rev. 0)
f. 2B-75 (Rev. 0)
f. 2B-76 (Rev. 0)
f. 2B-77 (Rev. 0)
f. 2B-78 (Rev. 0)
f. 2B-79 (Rev. 0)
f. 2B-80 (Rev. 0)
f. 2B-81 (Rev. 0)
f. 2B-82 (Rev. 0)
f. 2B-83 (Rev. 0)
f. 2B-84 (Rev. 0)
f. 2B-85 (Rev. 0)
f. 2B-86 (Rev. 0)
f. 2B-87 (Rev. 0)
f. 2B-88 (Rev. 0)
f. 2B-89 (Rev. 0)
f. 2B-90 (Rev. 0)
f. 2B-91 (Rev. 0)
f. 2B-92 (Rev. 0)
f. 2B-93 (Rev. 0)
f. 2B-94 (Rev. 0)
f. 2B-95 (Rev. 0)
f. 2B-96 (Rev. 0)
f. 2B-97 (Rev. 0)
f. 2B-98 (Rev. 0)
f. 2B-99 (Rev. 0)
f. 2B-100 (Rev. 0)
f. 2B-101 (Rev. 0)
f. 2B-102 (Rev. 0)
f. 2B-103 (Rev. 0)
f. 2B-104 (Rev. 0)
f. 2B-105 (Rev. 0)
f. 2B-106 (Rev. 0)
f. 2B-107 (Rev. 0)
f. 2B-108 (Rev. 0)
f. 2B-109 (Rev. 0)
f. 2B-110 (Rev. 0)
f. 2B-111 (Rev. 0)
f. 2B-112 (Rev. 0)
f. 2B-113 (Rev. 0)
f. 2B-114 (Rev. 0)
f. 2B-115 (Rev. 0)
f. 2B-116 (Rev. 0)
f. 2B-117 (Rev. 0)
f. 2B-118 (Rev. 0)
f. 2B-119 (Rev. 0)
f. 2B-120 (Rev. 0)
f. 2B-121 (Rev. 0)
f. 2B-122 (Rev. 0)
f. 2B-123 (Rev. 0)
f. 2B-124 (Rev. 0)
f. 2B-125 (Rev. 0)
f. 2B-126 (Rev. 0)
f. 2B-127 (Rev. 0)
f. 2B-128 (Rev. 0)
f. 2B-129 (Rev. 0)
f. 2B-130 (Rev. 0)
f. 2B-131 (Rev. 0)
f. 2B-132 (Rev. 0)
f. 2B-133 (Rev. 0)
f. 2B-134 (Rev. 0)

f. 2B-135 (Rev. 0)
f. 2B-136 (Rev. 0)
f. 2B-137 (Rev. 0)
f. 2B-138 (Rev. 0)
Supplement 2C, 12 sheets
unnumbered
p. i (chapter 3) (Rev. 0)
p. ii (chapter 3) (Rev. 7)
p. iii (chapter 3) (Rev. 3)
p. iv (chapter 3) (Rev. 14C)
p. v (chapter 3) (Rev. 3)
p. vi (chapter 3) (Rev. 9A)
p. vii (chapter 3) (Rev. 9A)
p. viii (chapter 3) (Rev. 3)
p. ix (chapter 3) (Rev. 9A)
p. x (chapter 3) (Rev. 9A)
p. xi (chapter 3) (Rev. 9A)
p. xii (chapter 3) (Rev. 7)
p. xiii (chapter 3) (Rev. 14D)
p. xiv (chapter 3) (Rev. 9A)
p. xv (chapter 3) (Rev. 9A)
p. xvi (chapter 3) (Rev. 13D)
p. xvii (chapter 3) (Rev. 5)
p. xviii (chapter 3) (Rev. 5)
p. xix (chapter 3) (Rev. 9A)
p. xx (chapter 3) (Rev. 14D)
p. xxi (chapter 3) (Rev. 9A)
p. xxii (chapter 3) (Rev. 9A)
p. xxiii (chapter 3) (Rev. 17B)
p. xxiv (chapter 3) (Rev. 9A)
p. xxv (chapter 3) (Rev. 9A)
p. xxvi (chapter 3) (Rev. 9A)
p. xxvii (chapter 3) (Rev. 9A)
p. xxviii (chapter 3) (Rev. 9B)
p. xxix (chapter 3) (Rev. 9A)
p. xxx (chapter 3) (Rev. 9A)
p. xxxi (chapter 3) (Rev. 17B)
p. 3.1-1 (Rev. 18A)
p. 3.1-2 (Rev. 16)
p. 3.1-3 (Rev. 16)
p. 3.1-4 (Rev. 16)
p. 3.1-5 (Rev. 16)
p. 3.1-6 (Rev. 16)
p. 3.1-7 (Rev. 18A)
p. 3.1-7a (Rev. 16)
p. 3.1-7b (Rev. 16)
p. 3.1-8 (Rev. 12D)
p. 3.1-9 (Rev. 12D)
p. 3.1-10 (Rev. 0)
p. 3.1-11 (Rev. 0)
p. 3.1-12 (Rev. 0)
p. 3.1-13 (Rev. 18A)
p. 3.1-14 (Rev. 18A)
p. 3.1-15 (Rev. 0)
p. 3.1-16 (Rev. 18A)
p. 3.1-17 (Rev. 0)
p. 3.1-18 (Rev. 2)
p. 3.1-19 (Rev. 0)
p. 3.1-20 (Rev. 18A)
p. 3.1-21 (Rev. 18A)
p. 3.1-22 (Rev. 0)
p. 3.1-23 (Rev. 18A)
p. 3.1-24 (Rev. 0)
p. 3.1-25 (Rev. 0)
p. 3.1-26 (Rev. 11B)
p. 3.1-27 (Rev. 18A)
p. 3.1-28 (Rev. 0)
p. 3.1-29 (Rev. 11B)
p. 3.1-30 (Rev. 18A)
p. 3.1-31 (Rev. 18A)
p. 3.1-32 (Rev. 18A)
p. 3.1-33 (Rev. 18A)
p. 3.1-34 (Rev. 9A)
p. 3.1-35 (Rev. 18A)
p. 3.1-36 (Rev. 18A)
p. 3.1-37 (Rev. 0)
p. 3.1-38 (Rev. 18A)
p. 3.1-39 (Rev. 18A)
p. 3.1-40 (Rev. 0)
p. 3.1-41 (Rev. 0)
p. 3.1-42 (Rev. 0)
p. 3.1-43 (Rev. 0)
p. 3.1-44 (Rev. 0)
p. 3.1-45 (Rev. 0)
p. 3.1-46 (Rev. 14D)
p. 3.1-47 (Rev. 0)
p. 3.1-48 (Rev. 0)
p. 3.1-49 (Rev. 0)
p. 3.1-50 (Rev. 0)
p. 3.1-51 (Rev. 10A)
p. 3.1-52 (Rev. 14C)
p. 3.1-53 (Rev. 0)
p. 3.1-54 (Rev. 0)
p. 3.1-55 (Rev. 2)
p. 3.1-56 (Rev. 0)
p. 3.1-57 (Rev. 17A)
p. 3.1-58 (Rev. 16)
p. 3.1-59 (Rev. 18A)
p. 3.1-60 (Rev. 18A)
p. 3.1-61 (Rev. 18A)
p. 3.1-62 (Rev. 18A)
p. 3.1-63 (Rev. 18A)
p. 3.1-64 (Rev. 18A)
p. 3.1-65 (Rev. 18A)

p. 3.1-66 (Rev. 18A)
p. 3.1-67 (Rev. 18A)
p. 3.1-68 (Rev. 18A)
p. 3.1-69 (Rev. 18A)
p. 3.1-70 (Rev. 15B)
t. 3.1-1 (Rev. 5)
t. 3.1-2 (Rev. 0)
p. 3.2-1 (Rev. 16)
p. 3.2-2 (Rev. 16)
p. 3.2-3 (Rev. 16)
p. 3.2-4 (Rev. 18A)
p. 3.2-5 (Rev. 13A)
p. 3.2-6 (Rev. 0)
p. 3.2-7 (Rev. 0)
p. 3.2-8 (Rev. 3)
p. 3.2-9 (Rev. 0)
p. 3.2-10 (Rev. 0)
p. 3.2-11 (Rev. 0)
t. 3.2-1 (sheet 1) (Rev. 16)
t. 3.2-1 (sheet 2) (Rev. 16)
t. 3.2-1 (sheet 3) (Rev. 16)
t. 3.2-1 (sheet 4) (Rev. 16)
t. 3.2-1 (sheet 5) (Rev. 16)
t. 3.2-1 (sheet 6) (Rev. 16)
t. 3.2-1 (sheet 7) (Rev. 16)
t. 3.2-1 (sheet 8) (Rev. 16)
t. 3.2-1 (sheet 9) (Rev. 2)
t. 3.2-1 (sheet 10) (Rev. 1)
t. 3.2-1 (sheet 11) (Rev. 16)
t. 3.2-2 (sheet 1) (Rev. 0)
t. 3.2-2 (sheet 2) (Rev. 3)
t. 3.2-2 (sheet 3) (Rev. 3)
t. 3.2-3 (Rev. 3)
t. 3.2-4 (sheet 1) (Rev. 13A)
t. 3.2-4 (sheet 2) (Rev. 16)
t. 3.2-4 (sheet 2a) (Rev. 16)
t. 3.2-4 (sheet 3) (Rev. 2)
t. 3.2-5 (Rev. 0)
t. 3.2-6 (sheet 1) (Rev. 0)
t. 3.2-6 (sheet 2) (Rev. 0)
f. 3.2-1 (Rev. 15A)
p. 3.3-1 (Rev. 0)
p. 3.3-2 (Rev. 0)
p. 3.3-3 (Rev. 0)
p. 3.3-4 (Rev. 0)
p. 3.3-5 (Rev. 13C)
p. 3.3-6 (Rev. 7)
p. 3.3-7 (Rev. 10B)
p. 3.3-8 (Rev. 10B)
p. 3.3-9 (Rev. 0)
t. 3.3-1 (Rev. 0)
f. 3.3-1 (Rev. 0)
p. 3.4-1 (Rev. 0)
p. 3.4-2 (Rev. 18B)
p. 3.4-3 (Rev. 0)
p. 3.4-4 (Rev. 0)
t. 3.4-1 (Rev. 0)
f. 3.4-1 (Rev. 0)
f. 3.4-2 (Rev. 0)
p. 3.5-1 (Rev. 16)
p. 3.5-2 (Rev. 0)
p. 3.5-3 (Rev. 17A)
p. 3.5-4 (Rev. 0)
p. 3.5-5 (Rev. 0)
p. 3.5-6 (Rev. 0)
p. 3.5-7 (Rev. 0)
p. 3.5-8 (Rev. 0)
p. 3.5-9 (Rev. 1)
p. 3.5-10 (Rev. 0)
p. 3.5-11 (Rev. 0)
p. 3.5-12 (Rev. 0)
p. 3.5-13 (Rev. 0)
p. 3.5-14 (Rev. 0)
p. 3.5-15 (Rev. 0)
t. 3.5-1 (Rev. 0)
t. 3.5-2 (Rev. 0)
t. 3.5-3 (Rev. 0)
t. 3.5-4 (sheet 1) (Rev. 10A)
t. 3.5-4 (sheet 2) (Rev. 0)
t. 3.5-4 (sheet 3) (Rev. 0)
f. 3.5-1 (Rev. 18A)
p. 3.6-1 (Rev. 8)
p. 3.6-2 (Rev. 0)
p. 3.6-3 (Rev. 8)
p. 3.6-3a (Rev. 18A)
p. 3.6-3b (Rev. 8)
p. 3.6-4 (Rev. 3)
p. 3.6-4a (Rev. 3)
p. 3.6-4b (Rev. 3)
p. 3.6-5 (Rev. 0)
p. 3.6-6 (Rev. 0)
p. 3.6-7 (Rev. 8)
p. 3.6-8 (Rev. 0)
p. 3.6-9 (Rev. 16)
p. 3.6-10 (Rev. 16)
p. 3.6-11 (Rev. 16)
p. 3.6-12 (Rev. 16)
p. 3.6-13 (Rev. 16)
p. 3.6-13a (Rev. 16)
p. 3.6-13b (Rev. 16)
p. 3.6-14 (Rev. 0)
p. 3.6-15 (Rev. 2)
p. 3.6-16 (Rev. 0)
p. 3.6-17 (Rev. 0)

p. 3.6-18 (Rev. 0)
p. 3.6-19 (Rev. 3)
p. 3.6-20 (Rev. 3)
p. 3.6-21 (Rev. 14D)
t. 3.6-1 (sheet 1) (Rev. 14D)
t. 3.6-1 (sheet 2) (Rev. 14D)
t. 3.6-1 (sheet 3) (Rev. 14D)
t. 3.6-2 (Rev. 3)
f. 3.6-1 (Rev. 0)
f. 3.6-2 (Rev. 0)
f. 3.6-3 (Rev. 0)
f. 3.6-4 (Rev. 0)
f. 3.6-5 (Rev. 14D)
f. 3.6-6 (Rev. 14D)
f. 3.6-7 (Rev. 3)
f. 3.6-8 (Rev. 3)
f. 3.6-9 (Rev. 17A)
f. 3.6-10 (Rev. 17B)
f. 3.6-11 (Rev. 17B)
f. 3.6-12 (Rev. 3)
f. 3.6-13 (Rev. 3)
f. 3.6-14 (Rev. 6)
f. 3.6-16 (Rev. 3)
f. 3.6-17 (Rev. 3)
f. 3.6-18 (Rev. 17B)
f. 3.6-19 (Rev. 17B)
f. 3.6-20 (Rev. 3)
f. 3.6-31 (Rev. 3)
f. 3.6-32 (Rev. 3)
f. 3.6-33 (Rev. 3)
f. 3.6-34 (Rev. 3)
f. 3.6-35 (Rev. 3)
f. 3.6-36 (Rev. 3)
f. 3.6-37 (Rev. 3)
f. 3.6-38 (Rev. 3)
p. 3.7A-1 (Rev. 17B)
p. 3.7A-1a (Rev. 15B)
p. 3.7A-1b (Rev. 15B)
p. 3.7A-2 (Rev. 14C)
p. 3.7A-3 (Rev. 14C)
p. 3.7A-3a (Rev. 14C)
p. 3.7A-3b (Rev. 3)
p. 3.7A-4 (Rev. 3)
p. 3.7A-5 (Rev. 3)
p. 3.7A-6 (Rev. 3)
p. 3.7A-7 (Rev. 3)
p. 3.7A-8 (Rev. 3)
p. 3.7A-9 (Rev. 3)
p. 3.7A-10 (Rev. 3)
p. 3.7A-11 (Rev. 15B)
p. 3.7A-12 (Rev. 3)
p. 3.7A-13 (Rev. 3)
p. 3.7A-14 (Rev. 3)
p. 3.7A-14a (Rev. 17B)
p. 3.7A-14b (Rev. 3)
p. 3.7A-15 (Rev. 0)
p. 3.7A-16 (Rev. 0)
p. 3.7A-17 (Rev. 0)
p. 3.7A-18 (Rev. 0)
p. 3.7A-19 (Rev. 15B)
p. 3.7A-19a (Rev. 15B)
p. 3.7A-19b (Rev. 15B)
p. 3.7A-20 (Rev. 7)
p. 3.7A-21 (Rev. 0)
p. 3.7A-22 (Rev. 3)
t. 3.7A-1 (Rev. 3)
t. 3.7A-2 (sheet 1) (Rev. 3)
t. 3.7A-2 (sheet 2) (Rev. 3)
t. 3.7A-3 (sheet 1) (Rev. 3)
t. 3.7A-3 (sheet 2) (Rev. 3)
t. 3.7A-4 (sheet 1) (Rev. 3)
t. 3.7A-4 (sheet 2) (Rev. 3)
f. 3.7A-1 (Rev. 0)
f. 3.7A-2 (Rev. 0)
f. 3.7A-3 (Rev. 0)
f. 3.7A-4 (Rev. 0)
f. 3.7A-5 (Rev. 3)
f. 3.7A-6 (Rev. 0)
f. 3.7A-7 (Rev. 0)
f. 3.7A-8 (Rev. 3)
f. 3.7A-9 (Rev. 3)
f. 3.7A-10 (Rev. 3)
f. 3.7A-11 (Rev. 0)
f. 3.7A-12 (Rev. 3)
f. 3.7A-13 (Rev. 3)
f. 3.7A-14 (Rev. 3)
f. 3.7A-15 (Rev. 3)
f. 3.7A-16 (Rev. 3)
f. 3.7A-17 (Rev. 3)
f. 3.7A-18 (Rev. 3)
f. 3.7A-19 (Rev. 3)
f. 3.7A-20 (Rev. 3)
f. 3.7A-21 (Rev. 3)
f. 3.7A-22 (Rev. 3)
f. 3.7A-23 (Rev. 3)
p. 3.7A.A-1 (Rev. 15B)
p. 3.7A.A-2 (Rev. 0)
p. 3.7A.A-3 (Rev. 0)
p. 3.7A.A-4 (Rev. 0)
p. 3.7A.A-5 (Rev. 0)
p. 3.7A.A-6 (Rev. 0)
p. 3.7A.A-7 (Rev. 0)
p. 3.7A.A-8 (Rev. 0)
f. 3.7A.A-1 (Rev. 0)

p. 3.7A.B-1 (Rev. 0)
p. 3.7A.B-2 (Rev. 0)
p. 3.7A.B-3 (Rev. 0)
p. 3.7A.B-4 (Rev. 0)
p. 3.7A.B-5 (Rev. 0)
p. 3.7A.B-6 (Rev. 0)
p. 3.7A.B-7 (Rev. 0)
p. 3.7A.B-8 (Rev. 0)
p. 3.7A.B-9 (Rev. 0)
p. 3.7A.B-10 (Rev. 0)
p. 3.7A.B-11 (Rev. 0)
t. 3.7A.B-1 (Rev. 0)
t. 3.7A.B-2 (Rev. 0)
t. 3.7A.B-3 (Rev. 0)
t. 3.7A.B-4 (Rev. 0)
t. 3.7A.B-5 (Rev. 0)
t. 3.7A.B-6 (Rev. 1)
f. 3.7A.B-1 (Rev. 0)
f. 3.7A.B-2 (Rev. 0)
f. 3.7A.B-3 (Rev. 0)
f. 3.7A.B-4 (Rev. 0)
f. 3.7A.B-5 (Rev. 0)
p. 3.7B-1 (Rev. 0)
p. 3.7B-2 (Rev. 2)
p. 3.7B-3 (Rev. 3)
p. 3.7B-4 (Rev. 3)
p. 3.7B-5 (Rev. 3)
p. 3.7B-6 (Rev. 3)
p. 3.7B-7 (Rev. 3)
p. 3.7B-8 (Rev. 3)
p. 3.7B-9 (Rev. 3)
p. 3.7B-10 (Rev. 3)
p. 3.7B-11 (Rev. 3)
p. 3.7B-12 (Rev. 3)
p. 3.7B-13 (Rev. 3)
p. 3.7B-14 (Rev. 3)
p. 3.7B-15 (Rev. 17A)
p. 3.7B-16 (Rev. 3)
p. 3.7B-17 (Rev. 3)
p. 3.7B-18 (Rev. 3)
p. 3.7B-19 (Rev. 3)
p. 3.7B-20 (Rev. 3)
p. 3.7B-21 (Rev. 3)
p. 3.7B-22 (Rev. 3)
p. 3.7B-23 (Rev. 3)
p. 3.7B-24 (Rev. 3)
p. 3.7B-25 (Rev. 3)
p. 3.7B-26 (Rev. 3)
p. 3.7B-27 (Rev. 3)
p. 3.7B-28 (Rev. 3)
t. 3.7B-1 (Rev. 3)
t. 3.7B-2 (Rev. 1)
t. 3.7B-3 (Rev. 2)
t. 3.7B-4 (Rev. 0)
f. 3.7B-1 (Rev. 3)
f. 3.7B-3 (Rev. 0)
f. 3.7B-4 (Rev. 0)
p. 3.8-1 (Rev. 18A)
p. 3.8-2 (Rev. 2)
p. 3.8-3 (Rev. 2)
p. 3.8-3a (Rev. 2)
p. 3.8-3b (Rev. 1)
p. 3.8-4 (Rev. 8)
p. 3.8-4a (Rev. 8)
p. 3.8-4b (Rev. 8)
p. 3.8-5 (Rev. 14D)
p. 3.8-6 (Rev. 9B)
p. 3.8-7 (Rev. 9B)
p. 3.8-8 (Rev. 9B)
p. 3.8-9 (Rev. 0)
p. 3.8-10 (Rev. 0)
p. 3.8-11 (Rev. 18A)
p. 3.8-12 (Rev. 0)
p. 3.8-13 (Rev. 2)
p. 3.8-14 (Rev. 2)
p. 3.8-14a (Rev. 2)
p. 3.8-14b (Rev. 2)
p. 3.8-15 (Rev. 0)
p. 3.8-16 (Rev. 0)
p. 3.8-17 (Rev. 0)
p. 3.8-18 (Rev. 0)
p. 3.8-19 (Rev. 1)
p. 3.8-20 (Rev. 0)
p. 3.8-21 (Rev. 0)
p. 3.8-22 (Rev. 0)
p. 3.8-23 (Rev. 0)
p. 3.8-24 (Rev. 0)
p. 3.8-25 (Rev. 0)
p. 3.8-26 (Rev. 0)
p. 3.8-27 (Rev. 0)
p. 3.8-28 (Rev. 1)
p. 3.8-29 (Rev. 0)
p. 3.8-30 (Rev. 0)
p. 3.8-31 (Rev. 0)
p. 3.8-32 (Rev. 0)
p. 3.8-33 (Rev. 0)
p. 3.8-34 (Rev. 0)
p. 3.8-35 (Rev. 0)
p. 3.8-36 (Rev. 0)
p. 3.8-37 (Rev. 0)
p. 3.8-38 (Rev. 0)
p. 3.8-39 (Rev. 0)
p. 3.8-40 (Rev. 11D)
p. 3.8-41 (Rev. 15A)

p. 3.8-41a (Rev. 15A)
p. 3.8-41b (Rev. 8)
p. 3.8-42 (Rev. 0)
p. 3.8-43 (Rev. 17A)
p. 3.8-44 (Rev. 17A)
p. 3.8-45 (Rev. 17A)
p. 3.8-46 (Rev. 17A)
p. 3.8-47 (Rev. 14D)
p. 3.8-48 (Rev. 17A)
p. 3.8-49 (Rev. 14D)
p. 3.8-50 (Rev. 13A)
p. 3.8-51 (Rev. 8)
p. 3.8-52 (Rev. 8)
p. 3.8-53 (Rev. 0)
p. 3.8-54 (Rev. 5)
p. 3.8-55 (Rev. 8)
p. 3.8-56 (Rev. 0)
p. 3.8-57 (Rev. 0)
p. 3.8-58 (Rev. 7)
p. 3.8-59 (Rev. 0)
p. 3.8-60 (Rev. 7)
p. 3.8-60a (Rev. 7)
p. 3.8-60b (Rev. 7)
p. 3.8-61 (Rev. 0)
p. 3.8-62 (Rev. 2)
p. 3.8-63 (Rev. 0)
p. 3.8-64 (Rev. 0)
p. 3.8-65 (Rev. 0)
p. 3.8-66 (Rev. 0)
p. 3.8-67 (Rev. 0)
p. 3.8-68 (Rev. 0)
p. 3.8-69 (Rev. 0)
p. 3.8-70 (Rev. 0)
p. 3.8-71 (Rev. 1)
p. 3.8-72 (Rev. 7)
p. 3.8-73 (Rev. 7)
p. 3.8-74 (Rev. 7)
p. 3.8-74a (Rev. 7)
p. 3.8-74b (Rev. 7)
p. 3.8-75 (Rev. 0)
p. 3.8-76 (Rev. 0)
p. 3.8-77 (Rev. 0)
p. 3.8-78 (Rev. 0)
p. 3.8-79 (Rev. 0)
p. 3.8-80 (Rev. 0)
p. 3.8-81 (Rev. 0)
p. 3.8-82 (Rev. 0)
p. 3.8-83 (Rev. 0)
p. 3.8-84 (Rev. 0)
p. 3.8-85 (Rev. 3)
p. 3.8-86 (Rev. 3)
p. 3.8-87 (Rev. 3)
p. 3.8-88 (Rev. 3)
p. 3.8-89 (Rev. 3)
p. 3.8-90 (Rev. 3)
p. 3.8-91 (Rev. 3)
p. 3.8-91a (Rev. 7)
p. 3.8-91b (Rev. 3)
p. 3.8-92 (Rev. 0)
p. 3.8-93 (Rev. 0)
p. 3.8-94 (Rev. 7)
p. 3.8-95 (Rev. 7)
p. 3.8-96 (Rev. 7)
p. 3.8-96a (Rev. 7)
p. 3.8-96b (Rev. 7)
p. 3.8-97 (Rev. 0)
p. 3.8-98 (Rev. 0)
p. 3.8-99 (Rev. 0)
p. 3.8-100 (Rev. 1)
p. 3.8-100a (Rev. 1)
p. 3.8-100b (Rev. 1)
p. 3.8-101 (Rev. 3)
p. 3.8-102 (Rev. 3)
p. 3.8-102a (Rev. 3)
p. 3.8-102b (Rev. 3)
p. 3.8-103 (Rev. 1)
p. 3.8-103a (Rev. 1)
p. 3.8-103b (Rev. 1)
p. 3.8-104 (Rev. 1)
p. 3.8-105 (Rev. 1)
p. 3.8-106 (Rev. 0)
p. 3.8-107 (Rev. 1)
p. 3.8-108 (Rev. 0)
p. 3.8-109 (Rev. 1)
p. 3.8-110 (Rev. 13A)
p. 3.8-111 (Rev. 0)
p. 3.8-112 (Rev. 13A)
p. 3.8-113 (Rev. 0)
p. 3.8-114 (Rev. 1)
p. 3.8-115 (Rev. 1)
p. 3.8-116 (Rev. 1)
p. 3.8-117 (Rev. 1)
p. 3.8-118 (Rev. 0)
p. 3.8-119 (Rev. 8)
t. 3.8-2 (sheet 1) (Rev. 0)
t. 3.8-2 (sheet 2) (Rev. 0)
t. 3.8-2 (sheet 3) (Rev. 0)
t. 3.8-2 (sheet 4) (Rev. 0)
t. 3.8-2 (sheet 5) (Rev. 0)
t. 3.8-2 (sheet 6) (Rev. 0)
t. 3.8-2 (sheet 7) (Rev. 0)
t. 3.8-2 (sheet 8) (Rev. 0)
t. 3.8-2 (sheet 9) (Rev. 0)
t. 3.8-2 (sheet 10) (Rev. 0)

t. 3.8-2 (sheet 11) (Rev. 0)
t. 3.8-3 (sheet 1) (Rev. 0)
t. 3.8-3 (sheet 2) (Rev. 0)
t. 3.8-3 (sheet 3) (Rev. 0)
t. 3.8-3 (sheet 4) (Rev. 0)
t. 3.8-3 (sheet 5) (Rev. 0)
t. 3.8-3 (sheet 6) (Rev. 0)
t. 3.8-4 (Rev. 0)
t. 3.8-8 (Rev. 0)
t. 3.8-9 (sheet 1) (Rev. 0)
t. 3.8-9 (sheet 2) (Rev. 0)
t. 3.8-10 (Rev. 0)
t. 3.8-11 (Rev. 0)
t. 3.8-12 (Rev. 0)
t. 3.8-13 (sheet 1) (Rev. 0)
t. 3.8-13 (sheet 2) (Rev. 0)
t. 3.8-14 (Rev. 0)
t. 3.8-15 (Rev. 0)
t. 3.8-16 (Rev. 0)
t. 3.8-17 (sheet 1) (Rev. 0)
t. 3.8-17 (sheet 2) (Rev. 0)
t. 3.8-18 (Rev. 0)
t. 3.8-19 (Rev. 0)
t. 3.8-20 (sheet 1) (Rev. 0)
t. 3.8-20 (sheet 2) (Rev. 0)
t. 3.8-20 (sheet 3) (Rev. 0)
t. 3.8-20 (sheet 4) (Rev. 0)
t. 3.8-20 (sheet 5) (Rev. 0)
t. 3.8-20 (sheet 6) (Rev. 0)
t. 3.8-20 (sheet 7) (Rev. 0)
t. 3.8-20 (sheet 8) (Rev. 0)
t. 3.8-20 (sheet 9) (Rev. 0)
t. 3.8-20 (sheet 10) (Rev. 0)
t. 3.8-20 (sheet 11) (Rev. 0)
t. 3.8-20 (sheet 12) (Rev. 0)
f. 3.8-1 (Rev. 0)
f. 3.8-2 (Rev. 7)
f. 3.8-3 (Rev. 0)
f. 3.8-4 (sheet 1) (Rev. 8)
f. 3.8-4 (sheet 2) (Rev. 8)
f. 3.8-4 (sheet 3) (Rev. 8)
f. 3.8-4 (sheet 4) (Rev. 8)
f. 3.8-5 (Rev. 0)
f. 3.8-6 (Rev. 0)
f. 3.8-7 (Rev. 0)
f. 3.8-8 (Rev. 7)
f. 3.8-9 (Rev. 7)
f. 3.8-10 (Rev. 0)
f. 3.8-11 (Rev. 0)
f. 3.8-12 (Rev. 0)
f. 3.8-13 (Rev. 0)
f. 3.8-14 (Rev. 0)
f. 3.8-15 (Rev. 0)
f. 3.8-16 (Rev. 0)
f. 3.8-17 (Rev. 0)
f. 3.8-18 (Rev. 7)
f. 3.8-19 (Rev. 0)
f. 3.8-20 (Rev. 0)
f. 3.8-21 (Rev. 0)
f. 3.8-22 (Rev. 0)
f. 3.8-23 (Rev. 0)
f. 3.8-24 (Rev. 0)
f. 3.8-25 (Rev. 11C)
f. 3.8-26 (Rev. 0)
f. 3.8-27 (Rev. 0)
f. 3.8-28 (Rev. 0)
f. 3.8-29 (Rev. 0)
f. 3.8-30 (sheet 1) (Rev. 0)
f. 3.8-30 (sheet 2) (Rev. 4)
f. 3.8-31 (Rev. 0)
f. 3.8-32 (Rev. 0)
f. 3.8-33 (Rev. 0)
f. 3.8-34 (Rev. 0)
f. 3.8-35 (Rev. 7)
f. 3.8-36 (Rev. 7)
f. 3.8-37 (Rev. 0)
f. 3.8-38 (Rev. 15B)
f. 3.8-39 (Rev. 17B)
f. 3.8-40 (Rev. 13D)
f. 3.8-41 (Rev. 6)
f. 3.8-42 (Rev. 11D)
f. 3.8-43 (Rev. 12D)
f. 3.8-44 (Rev. 8)
f. 3.8-45 (Rev. 0)
f. 3.8-46 (Rev. 0)
f. 3.8-47 (Rev. 7)
f. 3.8-48 (Rev. 1)
f. 3.8-49 (sheet 1) (Rev. 10A)
f. 3.8-49 (sheet 2) (Rev. 17B)
f. 3.8-50 (sheet 1) (Rev. 13D)
f. 3.8-50 (sheet 2) (Rev. 11D)
f. 3.8-51 (Rev. 0)
f. 3.8-52 (Rev. 17B)
f. 3.8-53 (Rev. 0)
f. 3.8-54 (Rev. 1)
f. 3.8-55 (Rev. 1)
f. 3.8-56 (Rev. 11A)
f. 3.8-57 (Rev. 5)
f. 3.8-58 (Rev. 0)
f. 3.8-59 (Rev. 0)
f. 3.8-60 (Rev. 0)
f. 3.8-61 (Rev. 0)
f. 3.8-62 (Rev. 0)
f. 3.8-63 (Rev. 0)

f. 3.8-64 (Rev. 0)
f. 3.8-65 (Rev. 0)
f. 3.8-66 (Rev. 0)
f. 3.8-67 (Rev. 0)
f. 3.8-68 (Rev. 0)
f. 3.8-69 (Rev. 0)
f. 3.8-70 (Rev. 0)
f. 3.8-71 (Rev. 0)
f. 3.8-72 (Rev. 0)
f. 3.8-73 (Rev. 0)
f. 3.8-74 (Rev. 0)
f. 3.8-75 (Rev. 0)
f. 3.8-76 (Rev. 0)
f. 3.8-77 (Rev. 0)
p. 3.8A-1 (Rev. 0)
p. 3.8A-2 (Rev. 0)
p. 3.8A-3 (Rev. 0)
p. 3.8A-4 (Rev. 0)
p. 3.8A-5 (Rev. 0)
p. 3.8A-6 (Rev. 0)
p. 3.8A-7 (Rev. 2)
p. 3.8A-8 (Rev. 0)
p. 3.8B-1 (Rev. 11D)
p. 3.8B-2 (Rev. 11D)
p. 3.8B-3 (Rev. 17B)
p. 3.8B-4 (Rev. 17B)
t. 3.8B-1 (sheet 1) (Rev. 2)
t. 3.8B-1 (sheet 2) (Rev. 2)
p. 3.8C-1 (Rev. 0)
p. 3.8C-2 (Rev. 0)
p. 3.8C-3 (Rev. 0)
p. 3.8C-4 (Rev. 1)
p. 3.8C-4a (Rev. 1)
p. 3.8C-4b (Rev. 1)
p. 3.8C-5 (Rev. 0)
p. 3.8C-6 (Rev. 0)
p. 3.8C-7 (Rev. 1)
p. 3.8C-8 (Rev. 1)
p. 3.8C-9 (Rev. 0)
p. 3.8C-10 (Rev. 0)
p. 3.8C-11 (Rev. 1)
p. 3.8C-11a (Rev. 1)
p. 3.8C-11b (Rev. 1)
p. 3.8C-12 (Rev. 0)
p. 3.8C-13 (Rev. 0)
p. 3.8C-14 (Rev. 0)
p. 3.8C-15 (Rev. 0)
p. 3.8C-16 (Rev. 0)
p. 3.8C-17 (Rev. 0)
p. 3.8C-18 (Rev. 0)
p. 3.8C-19 (Rev. 0)
p. 3.8C-20 (Rev. 0)
p. 3.8C-21 (Rev. 0)
p. 3.8C-22 (Rev. 0)
p. 3.8C-23 (Rev. 0)
p. 3.8C-24 (Rev. 0)
p. 3.8C-25 (Rev. 0)
p. 3.8C-26 (Rev. 0)
p. 3.8C-27 (Rev. 0)
p. 3.8C-28 (Rev. 0)
p. 3.8C-29 (Rev. 1)
p. 3.8C-30 (Rev. 1)
p. 3.8C-31 (Rev. 1)
p. 3.8D-1 (Rev. 0)
p. 3.8D-2 (Rev. 0)
p. 3.8D-3 (Rev. 0)
p. 3.8D-4 (Rev. 3)
p. 3.8D-5 (Rev. 3)
p. 3.8D-6 (Rev. 3)
p. 3.8D-7 (Rev. 3)
p. 3.8D-8 (Rev. 3)
p. 3.8D-9 (Rev. 3)
p. 3.8D-10 (Rev. 3)
p. 3.8D-11 (Rev. 3)
p. 3.8D-12 (Rev. 3)
p. 3.8D-13 (Rev. 3)
p. 3.8D-14 (Rev. 3)
p. 3.8D-15 (Rev. 3)
p. 3.8D-16 (Rev. 3)
p. 3.8D-17 (Rev. 3)
p. 3.8D-18 (Rev. 3)
p. 3.8D-19 (Rev. 3)
p. 3.8D-20 (Rev. 3)
p. 3.8D-21 (Rev. 3)
p. 3.8D-22 (Rev. 3)
p. 3.8D-23 (Rev. 3)
p. 3.9-1 (Rev. 1)
p. 3.9-2 (Rev. 15B)
p. 3.9-3 (Rev. 15B)
p. 3.9-4 (Rev. 15B)
p. 3.9-4a (Rev. 15B)
p. 3.9-4b (Rev. 3)
p. 3.9-5 (Rev. 0)
p. 3.9-6 (Rev. 1)
p. 3.9-7 (Rev. 18A)
p. 3.9-8 (Rev. 18A)
p. 3.9-9 (Rev. 0)
p. 3.9-10 (Rev. 16)
p. 3.9-11 (Rev. 18A)
p. 3.9-12 (Rev. 0)
p. 3.9-13 (Rev. 0)
p. 3.9-14 (Rev. 0)
p. 3.9-15 (Rev. 16)
p. 3.9-16 (Rev. 0)

p. 3.9-17 (Rev. 3)
p. 3.9-18 (Rev. 1)
p. 3.9-18a (Rev. 1)
p. 3.9-18b (Rev. 1)
p. 3.9-19 (Rev. 2)
p. 3.9-19a (Rev. 2)
p. 3.9-19b (Rev. 2)
p. 3.9-20 (Rev. 1)
p. 3.9-20a (Rev. 1)
p. 3.9-20b (Rev. 1)
p. 3.9-21 (Rev. 3)
p. 3.9-22 (Rev. 3)
p. 3.9-23 (Rev. 1)
p. 3.9-24 (Rev. 0)
p. 3.9-25 (Rev. 3)
p. 3.9-26 (Rev. 3)
p. 3.9-27 (Rev. 3)
p. 3.9-28 (Rev. 3)
p. 3.9-28a (Rev. 3)
p. 3.9-28b (Rev. 3)
p. 3.9-29 (Rev. 1)
p. 3.9-30 (Rev. 1)
p. 3.9-31 (Rev. 0)
p. 3.9-32 (Rev. 0)
p. 3.9-33 (Rev. 0)
p. 3.9-34 (Rev. 1)
p. 3.9-35 (Rev. 0)
p. 3.9-36 (Rev. 0)
p. 3.9-37 (Rev. 5)
p. 3.9-38 (Rev. 0)
p. 3.9-39 (Rev. 1)
p. 3.9-40 (Rev. 0)
p. 3.9-41 (Rev. 3)
p. 3.9-42 (Rev. 3)
p. 3.9-43 (Rev. 5)
p. 3.9-44 (Rev. 0)
p. 3.9-45 (Rev. 0)
p. 3.9-46 (Rev. 0)
p. 3.9-47 (Rev. 5)
p. 3.9-48 (Rev. 15B)
p. 3.9-48a (Rev. 15B)
p. 3.9-48b (Rev. 15B)
p. 3.9-49 (Rev. 14D)
p. 3.9-50 (Rev. 0)
p. 3.9-51 (Rev. 0)
p. 3.9-52 (Rev. 0)
p. 3.9-53 (Rev. 0)
p. 3.9-54 (Rev. 0)
p. 3.9-55 (Rev. 1)
p. 3.9-56 (Rev. 0)
p. 3.9-57 (Rev. 0)
p. 3.9-58 (Rev. 2)
p. 3.9-59 (Rev. 13D)
p. 3.9-60 (Rev. 13D)
p. 3.9-61 (Rev. 13D)
p. 3.9-62 (Rev. 13D)
p. 3.9-63 (Rev. 13D)
p. 3.9-64 (Rev. 13D)
p. 3.9-65 (Rev. 17B)
t. 3.9-1 (Rev. 0)
t. 3.9-2 (sheet 1) (Rev. 17B)
t. 3.9-2 (sheet 2) (Rev. 17B)
t. 3.9-3 (sheet 1) (Rev. 3)
t. 3.9-3 (sheet 2) (Rev. 0)
t. 3.9-3 (sheet 3) (Rev. 0)
t. 3.9-3 (sheet 4) (Rev. 3)
t. 3.9-3 (sheet 5) (Rev. 0)
t. 3.9-3 (sheet 6) (Rev. 0)
t. 3.9-4 (sheet 1) (Rev. 2)
t. 3.9-4 (sheet 2) (Rev. 2)
t. 3.9-4 (sheet 3) (Rev. 2)
t. 3.9-4 (sheet 4) (Rev. 2)
t. 3.9-4 (sheet 5) (Rev. 2)
t. 3.9-4 (sheet 6) (Rev. 2)
t. 3.9-4 (sheet 7) (Rev. 2)
t. 3.9-5 (Rev. 3)
t. 3.9-6 (Rev. 14D)
t. 3.9-7 (Rev. 14D)
t. 3.9-8 (sheet 1) (Rev. 3)
t. 3.9-8 (sheet 2) (Rev. 3)
t. 3.9-9 (sheet 1) (Rev. 0)
t. 3.9-9 (sheet 2) (Rev. 0)
t. 3.9-9 (sheet 3) (Rev. 8)
t. 3.9-9 (sheet 4) (Rev. 0)
t. 3.9-10 (sheet 1) (Rev. 0)
t. 3.9-10 (sheet 2) (Rev. 8)
t. 3.9-10 (sheet 3) (Rev. 0)
t. 3.9-11 (Rev. 2)
t. 3.9-12 (sheet 1) (Rev. 2)
t. 3.9-12 (sheet 2) (Rev. 2)
t. 3.9-13 (sheet 1) (Rev. 0)
t. 3.9-13 (sheet 2) (Rev. 0)
t. 3.9-13 (sheet 3) (Rev. 0)
t. 3.9-13 (sheet 4) (Rev. 0)
t. 3.9-13 (sheet 5) (Rev. 0)
t. 3.9-14 (sheet 1) (Rev. 2)
t. 3.9-14 (sheet 2) (Rev. 2)
t. 3.9-14 (sheet 3) (Rev. 2)
t. 3.9-14 (sheet 4) (Rev. 2)
t. 3.9-14 (sheet 5) (Rev. 2)
t. 3.9-14 (sheet 6) (Rev. 2)
t. 3.9-14 (sheet 7) (Rev. 2)
t. 3.9-14 (sheet 8) (Rev. 2)
t. 3.9-14 (sheet 9) (Rev. 2)

t. 3.9-14 (sheet 10) (Rev. 2)
t. 3.9-14 (sheet 11) (Rev. 2)
t. 3.9-14 (sheet 12) (Rev. 2)
t. 3.9-14 (sheet 13) (Rev. 2)
t. 3.9-15 (sheet 1) (Rev. 2)
t. 3.9-15 (sheet 2) (Rev. 3)
t. 3.9-15 (sheet 3) (Rev. 3)
t. 3.9-16 (sheet 1) (Rev. 3)
t. 3.9-16 (sheet 2) (Rev. 3)
t. 3.9-16 (sheet 3) (Rev. 3)
t. 3.9-16 (sheet 4) (Rev. 3)
t. 3.9-16 (sheet 5) (Rev. 3)
t. 3.9-16 (sheet 6) (Rev. 3)
t. 3.9-16 (sheet 7) (Rev. 3)
t. 3.9-16 (sheet 8) (Rev. 3)
t. 3.9-17 (Rev. 2)
t. 3.9-18 (sheet 1) (Rev. 2)
t. 3.9-18 (sheet 2) (Rev. 2)
t. 3.9-18 (sheet 3) (Rev. 2)
t. 3.9-18 (sheet 4) (Rev. 2)
t. 3.9-19 (Rev. 2)
t. 3.9-20 (sheet 1) (Rev. 2)
t. 3.9-20 (sheet 2) (Rev. 2)
t. 3.9-20 (sheet 3) (Rev. 2)
t. 3.9-21 (sheet 1) (Rev. 2)
t. 3.9-21 (sheet 2) (Rev. 2)
t. 3.9-22 (sheet 1) (Rev. 2)
t. 3.9-22 (sheet 2) (Rev. 2)
t. 3.9-23 (sheet 1) (Rev. 2)
t. 3.9-23 (sheet 2) (Rev. 2)
t. 3.9-23 (sheet 3) (Rev. 2)
t. 3.9-24 (sheet 1) (Rev. 2)
t. 3.9-24 (sheet 2) (Rev. 2)
t. 3.9-25 (sheet 1) (Rev. 2)
t. 3.9-25 (sheet 2) (Rev. 2)
t. 3.9-25 (sheet 3) (Rev. 2)
t. 3.9-26 (sheet 1) (Rev. 2)
t. 3.9-26 (sheet 2) (Rev. 2)
t. 3.9-27 (sheet 1) (Rev. 0)
t. 3.9-27 (sheet 2) (Rev. 0)
t. 3.9-28 (Rev. 2)
t. 3.9-29 (sheet 1) (Rev. 0)
t. 3.9-29 (sheet 2) (Rev. 0)
t. 3.9-30 (sheet 1) (Rev. 0)
t. 3.9-30 (sheet 2) (Rev. 0)
t. 3.9-31 (sheet 1) (Rev. 0)
t. 3.9-31 (sheet 2) (Rev. 0)
t. 3.9-31 (sheet 3) (Rev. 0)
t. 3.9-32 (sheet 1) (Rev. 2)
t. 3.9-32 (sheet 2) (Rev. 2)
t. 3.9-33 (sheet 1) (Rev. 5)
t. 3.9-33 (sheet 2) (Rev. 15A)
t. 3.9-33 (sheet 3) (Rev. 5)
t. 3.9-33 (sheet 4) (Rev. 15A)
t. 3.9-33 (sheet 5) (Rev. 5)
t. 3.9-33 (sheet 6) (Rev. 15A)
t. 3.9-33 (sheet 7) (Rev. 5)
t. 3.9-33 (sheet 8) (Rev. 14D)
t. 3.9-33 (sheet 9) (Rev. 14D)
t. 3.9-33 (sheet 10) (Rev. 5)
t. 3.9-33 (sheet 11) (Rev. 5)
t. 3.9-33 (sheet 12) (Rev. 5)
t. 3.9-33 (sheet 13) (Rev. 5)
t. 3.9-33 (sheet 14) (Rev. 15A)
t. 3.9-33 (sheet 15) (Rev. 17A)
t. 3.9-33 (sheet 16) (Rev. 13A)
t. 3.9-33 (sheet 17) (Rev. 13A)
t. 3.9-33 (sheet 18) (Rev. 5)
t. 3.9-34 (sheet 1) (Rev. 16)
t. 3.9-34 (sheet 2) (Rev. 16)
t. 3.9-35 (sheet 1) (Rev. 8)
t. 3.9-35 (sheet 2) (Rev. 2)
t. 3.9-35 (sheet 3) (Rev. 2)
t. 3.9-35 (sheet 4) (Rev. 2)
t. 3.9-35 (sheet 5) (Rev. 2)
t. 3.9-35 (sheet 6) (Rev. 2)
t. 3.9-36 (sheet 1) (Rev. 2)
t. 3.9-36 (sheet 2) (Rev. 2)
t. 3.9-36 (sheet 3) (Rev. 2)
t. 3.9-36 (sheet 4) (Rev. 2)
t. 3.9-36 (sheet 5) (Rev. 2)
t. 3.9-37 (sheet 1) (Rev. 2)
t. 3.9-37 (sheet 2) (Rev. 2)
t. 3.9-37 (sheet 3) (Rev. 2)
t. 3.9-37 (sheet 4) (Rev. 2)
t. 3.9-37 (sheet 5) (Rev. 2)
t. 3.9-38 (sheet 1) (Rev. 2)
t. 3.9-38 (sheet 2) (Rev. 2)
t. 3.9-38 (sheet 3) (Rev. 2)
t. 3.9-38 (sheet 4) (Rev. 2)
t. 3.9-38 (sheet 5) (Rev. 2)
t. 3.9-39 (sheet 1) (Rev. 2)
t. 3.9-39 (sheet 2) (Rev. 2)
t. 3.9-39 (sheet 3) (Rev. 2)
t. 3.9-39 (sheet 4) (Rev. 2)
t. 3.9-39 (sheet 5) (Rev. 2)
t. 3.9-40 (sheet 1) (Rev. 2)
t. 3.9-40 (sheet 2) (Rev. 2)
t. 3.9-40 (sheet 3) (Rev. 2)
t. 3.9-40 (sheet 4) (Rev. 2)
t. 3.9-40 (sheet 5) (Rev. 2)
t. 3.9-41 (sheet 1) (Rev. 2)
t. 3.9-41 (sheet 2) (Rev. 2)
t. 3.9-41 (sheet 3) (Rev. 2)

t. 3.9-41 (sheet 4) (Rev. 2)
t. 3.9-41 (sheet 5) (Rev. 2)
t. 3.9-42 (sheet 1) (Rev. 2)
t. 3.9-42 (sheet 2) (Rev. 2)
t. 3.9-42 (sheet 3) (Rev. 2)
t. 3.9-42 (sheet 4) (Rev. 2)
t. 3.9-42 (sheet 5) (Rev. 2)
t. 3.9-43 (Rev. 12B)
t. 3.9-44 (Rev. 2)
t. 3.9-45 (Rev. 2)
t. 3.9-46 (Rev. 2)
t. 3.9-47 (Rev. 2)
t. 3.9-48 (sheet 1) (Rev. 0)
t. 3.9-48 (sheet 2) (Rev. 0)
t. 3.9-49 (sheet 1) (Rev. 0)
t. 3.9-49 (sheet 2) (Rev. 0)
t. 3.9-49 (sheet 3) (Rev. 0)
t. 3.9-50 (sheet 1) (Rev. 2)
t. 3.9-50 (sheet 2) (Rev. 2)
t. 3.9-50 (sheet 3) (Rev. 2)
t. 3.9-51 (Rev. 0)
t. 3.9-52 (sheet 1) (Rev. 2)
t. 3.9-52 (sheet 2) (Rev. 2)
t. 3.9-52 (sheet 3) (Rev. 2)
t. 3.9-53 (Rev. 0)
t. 3.9-54 (Rev. 0)
t. 3.9-55 (sheet 1) (Rev. 2)
t. 3.9-55 (sheet 2) (Rev. 2)
t. 3.9-55 (sheet 3) (Rev. 2)
t. 3.9-55 (sheet 4) (Rev. 2)
t. 3.9-56 (sheet 1) (Rev. 2)
t. 3.9-56 (sheet 2) (Rev. 5)
t. 3.9-56 (sheet 3) (Rev. 2)
t. 3.9-57 (Rev. 2)
t. 3.9-58 (sheet 1) (Rev. 2)
t. 3.9-58 (sheet 2) (Rev. 2)
t. 3.9-58 (sheet 3) (Rev. 2)
t. 3.9-59 (sheet 1) (Rev. 2)
t. 3.9-59 (sheet 2) (Rev. 2)
t. 3.9-59 (sheet 3) (Rev. 2)
t. 3.9-60 (sheet 1) (Rev. 2)
t. 3.9-60 (sheet 2) (Rev. 2)
t. 3.9-60 (sheet 3) (Rev. 2)
t. 3.9-61 (sheet 1) (Rev. 2)
t. 3.9-61 (sheet 2) (Rev. 2)
t. 3.9-62 (Rev. 2)
t. 3.9-63 (Rev. 2)
t. 3.9-64 (Rev. 0)
f. 3.9-1 (Rev. 0)
f. 3.9-2 (sheet 1) (Rev. 14B)
f. 3.9-2 (sheet 2) (Rev. 8)
f. 3.9-4 (Rev. 16)
f. 3.9-5 (Rev. 17A)
f. 3.9-6 (Rev. 8)
f. 3.9-7 (Rev. 16)
f. 3.9-8 (sheet 1) (Rev. 16)
f. 3.9-8 (sheet 2) (Rev. 16)
f. 3.9-9 (Rev. 17B)
f. 3.9-10 (Rev. 16)
f. 3.9-11 (Rev. 10A)
f. 3.9-12 (Rev. 11D)
f. 3.9-13 (Rev. 11D)
f. 3.9-14 (Rev. 17B)
f. 3.9-15 (Rev. 11D)
f. 3.9-16 (sheet 1) (Rev. 10B)
f. 3.9-16 (sheet 2) (Rev. 8)
f. 3.9-17 (Rev. 17B)
f. 3.9-18 (Rev. 17B)
f. 3.9-19 (Rev. 13B)
f. 3.9-20 (sheet 1) (Rev. 13B)
f. 3.9-20 (sheet 2) (Rev. 13B)
f. 3.9-21 (sheet 1) (Rev. 14D)
f. 3.9-21 (sheet 2) (Rev. 14D)
f. 3.9-22 (Rev. 8)
f. 3.9-23 (Rev. 8)
f. 3.9-24 (Rev. 16)
f. 3.9-25 (Rev. 17B)
f. 3.9-26 (Rev. 5)
f. 3.9-27 (Rev. 16)
f. 3.9-28 (Rev. 8)
f. 3.9-29 (Rev. 17B)
f. 3.9-30 (Rev. 5)
f. 3.9-31 (Rev. 14D)
f. 3.9-32 (sheet 1) (Rev. 8)
f. 3.9-32 (sheet 2) (Rev. 8)
f. 3.9-33 (Rev. 14D)
f. 3.9-34 (Rev. 10B)
f. 3.9-35 (Rev. 17B)
f. 3.9-36 (sheet 1) (Rev. 8)
f. 3.9-36 (sheet 2) (Rev. 8)
f. 3.9-36 (sheet 3) (Rev. 5)
f. 3.9-37 (sheet 1) (Rev. 15B)
f. 3.9-37 (sheet 2) (Rev. 15B)
f. 3.9-37 (sheet 3) (Rev. 15B)
f. 3.9-37 (sheet 4) (Rev. 15B)
p. 3.10-1 (Rev. 15B)
p. 3.10-2 (Rev. 15B)
p. 3.10-3 (Rev. 15B)
p. 3.10-4 (Rev. 0)
p. 3.10-5 (Rev. 1)
p. 3.10-6 (Rev. 1)
p. 3.10-6a (Rev. 1)
p. 3.10-6b (Rev. 1)
p. 3.10-7 (Rev. 0)

p. 3.10-8 (Rev. 0)
p. 3.10-9 (Rev. 2)
p. 3.10-10 (Rev. 1)
p. 3.10-11 (Rev. 1)
p. 3.10-12 (Rev. 0)
p. 3.10-13 (Rev. 0)
p. 3.10-14 (Rev. 0)
p. 3.10-15 (Rev. 0)
p. 3.10-16 (Rev. 3)
p. 3.10-17 (Rev. 0)
p. 3.10-18 (Rev. 0)
p. 3.10-19 (Rev. 0)
p. 3.10-20 (Rev. 0)
p. 3.10-21 (Rev. 0)
p. 3.10-22 (Rev. 1)
p. 3.10-23 (Rev. 1)
p. 3.10-24 (Rev. 0)
p. 3.10-25 (Rev. 0)
p. 3.10-26 (Rev. 0)
p. 3.10-27 (Rev. 0)
p. 3.10-28 (Rev. 0)
p. 3.10-29 (Rev. 1)
p. 3.10-30 (Rev. 3)
p. 3.10-31 (Rev. 0)
p. 3.10-32 (Rev. 3)
p. 3.10-33 (Rev. 2)
p. 3.10-33a (Rev. 3)
p. 3.10-33b (Rev. 2)
p. 3.10-34 (Rev. 2)
p. 3.10-35 (Rev. 0)
p. 3.10-36 (Rev. 0)
p. 3.10-37 (Rev. 3)
t. 3.10-1 (sheet 1) (Rev. 0)
t. 3.10-1 (sheet 2) (Rev. 5)
t. 3.10-1 (sheet 3) (Rev. 0)
t. 3.10-1 (sheet 4) (Rev. 0)
t. 3.10-1 (sheet 5) (Rev. 3)
t. 3.10-1 (sheet 6) (Rev. 5)
t. 3.10-2 (Rev. 0)
t. 3.10-3 (sheet 1) (Rev. 16)
t. 3.10-3 (sheet 2) (Rev. 3)
t. 3.10-3 (sheet 3) (Rev. 3)
t. 3.10-3 (sheet 4) (Rev. 3)
t. 3.10-4 (sheet 1) (Rev. 4)
t. 3.10-4 (sheet 2) (Rev. 4)
t. 3.10-4 (sheet 3) (Rev. 2)
t. 3.10-5 (Rev. 0)
t. 3.10-6 (Rev. 0)
t. 3.10-7 (Rev. 0)
t. 3.10-8 (Rev. 0)
t. 3.10-9 (sheet 1) (Rev. 0)
t. 3.10-9 (sheet 2) (Rev. 0)
t. 3.10-10 (Rev. 0)
t. 3.10-11 (Rev. 2)
t. 3.10-12 (sheet 1) (Rev. 0)
t. 3.10-12 (sheet 2) (Rev. 0)
t. 3.10-13 (sheet 1) (Rev. 2)
t. 3.10-13 (sheet 2) (Rev. 2)
t. 3.10-14 (Rev. 2)
t. 3.10-15 (sheet 1) (Rev. 2)
t. 3.10-15 (sheet 2) (Rev. 2)
t. 3.10-16 (Rev. 2)
t. 3.10-17 (sheet 1) (Rev. 0)
t. 3.10-17 (sheet 2) (Rev. 2)
t. 3.10-18 (sheet 1) (Rev. 0)
t. 3.10-18 (sheet 2) (Rev. 0)
t. 3.10-19 (sheet 1) (Rev. 0)
t. 3.10-19 (sheet 2) (Rev. 0)
t. 3.10-20 (sheet 1) (Rev. 0)
t. 3.10-20 (sheet 2) (Rev. 0)
t. 3.10-21 (Rev. 3)
t. 3.10-22 (sheet 1) (Rev. 13A)
t. 3.10-22 (sheet 2) (Rev. 13A)
f. 3.10-1 (Rev. 0)
f. 3.10-2 (Rev. 0)
f. 3.10-3 (Rev. 0)
f. 3.10-4 (Rev. 0)
f. 3.10-5 (Rev. 0)
f. 3.10-6 (Rev. 0)
f. 3.10-7 (Rev. 0)
f. 3.10-8 (sheet 1) (Rev. 3)
f. 3.10-8 (sheet 2) (Rev. 3)
f. 3.10-8 (sheet 3) (Rev. 3)
f. 3.10-8 (sheet 4) (Rev. 3)
f. 3.10-9 (sheet 1) (Rev. 3)
f. 3.10-9 (sheet 2) (Rev. 3)
f. 3.10-9 (sheet 3) (Rev. 3)
f. 3.10-9 (sheet 4) (Rev. 3)
f. 3.10-10 (Rev. 0)
f. 3.10-11 (Rev. 0)
f. 3.10-12 (Rev. 0)
f. 3.10-13 (Rev. 0)
f. 3.10-14 (sheet 1) (Rev. 0)
f. 3.10-14 (sheet 2) (Rev. 0)
f. 3.10-14 (sheet 3) (Rev. 0)
f. 3.10-14 (sheet 4) (Rev. 0)
f. 3.10-14 (sheet 5) (Rev. 0)
f. 3.10-14 (sheet 6) (Rev. 0)
p. 3.11-1 (Rev. 15B)
p. 3.11-2 (Rev. 17A)
p. 3.11-3 (Rev. 5)
p. 3.11-4 (Rev. 17B)
p. 3.11-5 (Rev. 17B)
p. 3.11-6 (Rev. 16)

p. 3.11-7 (Rev. 16)
t. 3.11-1 (sheet 1) (Rev. 17B)
t. 3.11-1 (sheet 2) (Rev. 17B)
f. 3.11-2 (Rev. 17B)
p. i (chapter 4) (Rev. 18A)
p. ii (chapter 4) (Rev. 18A)
p. iii (chapter 4) (Rev. 18A)
p. iv (chapter 4) (Rev. 18A)
p. v (chapter 4) (Rev. 18A)
p. 4.1-1 (Rev. 18A)
p. 4.1-2 (Rev. 18A)
p. 4.1-3 (Rev. 18A)
p. 4.1-4 (Rev. 18A)
p. 4.1-5 (Rev. 18A)
p. 4.1-6 (Rev. 18A)
p. 4.1-7 (Rev. 18A)
p. 4.1-8 (Rev. 18A)
f. 4.1-1 (Rev. 18A)
f. 4.1-2 (Rev. 18A)
f. 4.1-3 (Rev. 18A)
f. 4.1-4 (Rev. 18A)
p. 4.2-1 (Rev. 18A)
p. 4.2-2 (Rev. 18A)
p. 4.2-3 (Rev. 18A)
p. 4.2-4 (Rev. 18A)
p. 4.2-5 (Rev. 18A)
p. 4.2-6 (Rev. 18A)
p. 4.2-7 (Rev. 18A)
p. 4.2-8 (Rev. 18A)
p. 4.2-9 (Rev. 18A)
p. 4.2-10 (Rev. 18A)
p. 4.2-11 (Rev. 18A)
p. 4.2-12 (Rev. 18A)
p. 4.2-13 (Rev. 18A)
p. 4.2-14 (Rev. 18A)
p. 4.2-15 (Rev. 18A)
p. 4.2-16 (Rev. 18A)
p. 4.2-17 (Rev. 18A)
p. 4.2-18 (Rev. 18A)
p. 4.2-19 (Rev. 18A)
p. 4.2-20 (Rev. 18A)
p. 4.2-21 (Rev. 18A)
p. 4.2-22 (Rev. 18A)
p. 4.2-23 (Rev. 18A)
p. 4.2-24 (Rev. 18A)
p. 4.2-25 (Rev. 18A)
p. 4.2-26 (Rev. 18A)
p. 4.2-27 (Rev. 18A)
p. 4.2-28 (Rev. 18A)
p. 4.2-29 (Rev. 18A)
p. 4.2-30 (Rev. 18A)
p. 4.2-31 (Rev. 18A)
p. 4.2-32 (Rev. 18A)
p. 4.2-33 (Rev. 18A)
p. 4.2-34 (Rev. 18A)
p. 4.2-35 (Rev. 18A)
p. 4.2-36 (Rev. 18A)
p. 4.2-37 (Rev. 18A)
p. 4.2-38 (Rev. 18A)
p. 4.2-39 (Rev. 18A)
p. 4.2-40 (Rev. 18A)
p. 4.2-41 (Rev. 18A)
p. 4.2-42 (Rev. 18A)
p. 4.2-43 (Rev. 18A)
p. 4.2-44 (Rev. 18A)
p. 4.2-45 (Rev. 18A)
p. 4.2-46 (Rev. 18A)
p. 4.2-47 (Rev. 18A)
p. 4.2-48 (Rev. 18A)
p. 4.2-49 (Rev. 18A)
p. 4.2-50 (Rev. 18A)
p. 4.2-51 (Rev. 18A)
p. 4.2-52 (Rev. 18A)
p. 4.2-53 (Rev. 18A)
p. 4.2-54 (Rev. 18A)
p. 4.2-55 (Rev. 18A)
p. 4.2-56 (Rev. 18A)
p. 4.2-57 (Rev. 18A)
p. 4.2-58 (Rev. 18A)
p. 4.2-59 (Rev. 18A)
p. 4.2-60 (Rev. 18A)
p. 4.2-61 (Rev. 18A)
p. 4.2-62 (Rev. 18A)
p. 4.2-63 (Rev. 18A)
p. 4.2-64 (Rev. 18A)
t. 4.2-1 (Rev. 18A)
t. 4.2-2 (sheet 1) (Rev. 18A)
t. 4.2-2 (sheet 2) (Rev. 18A)
t. 4.2-2 (sheet 3) (Rev. 18A)
t. 4.2-3 (Rev. 18A)
t. 4.2-4 (Rev. 18A)
t. 4.2-5 (sheet 1) (Rev. 18A)
t. 4.2-5 (sheet 2) (Rev. 18A)
t. 4.2-5 (sheet 3) (Rev. 18A)
t. 4.2-5 (sheet 4) (Rev. 18A)
t. 4.2-6 (sheet 1) (Rev. 18A)
t. 4.2-6 (sheet 2) (Rev. 18A)
t. 4.2-6 (sheet 3) (Rev. 18A)
t. 4.2-7 (sheet 1) (Rev. 18A)
t. 4.2-7 (sheet 2) (Rev. 18A)
t. 4.2-7 (sheet 3) (Rev. 18A)
t. 4.2-8 (Rev. 18A)
t. 4.2-9 (Rev. 18A)
t. 4.2-10 (Rev. 18A)

t. 4.2-11 (Rev. 18A)
f. 4.2-1 (Rev. 18A)
f. 4.2-2 (Rev. 18A)
f. 4.2-3 (Rev. 18A)
f. 4.2-4 (Rev. 18A)
f. 4.2-5 (Rev. 18A)
f. 4.2-6 (Rev. 18B)
f. 4.2-7 (Rev. 18A)
f. 4.2-8 (Rev. 18A)
f. 4.2-9 (Rev. 18A)
f. 4.2-10 (Rev. 18A)
f. 4.2-11 (Rev. 18A)
f. 4.2-12 (Rev. 18A)
f. 4.2-13 (Rev. 18A)
f. 4.2-14 (Rev. 18A)
f. 4.2-15 (Rev. 18A)
f. 4.2-16 (Rev. 18A)
p. 4.3-1 (Rev. 18A)
p. 4.3-2 (Rev. 18A)
p. 4.3-3 (Rev. 18A)
p. 4.3-4 (Rev. 18A)
p. 4.3-5 (Rev. 18A)
p. 4.3-6 (Rev. 18A)
t. 4.3-1 (Rev. 18A)
p. 4.4-1 (Rev. 18A)
p. 4.4-2 (Rev. 18A)
p. 4.4-3 (Rev. 18A)
p. 4.4-4 (Rev. 18A)
p. 4.4-5 (Rev. 18A)
p. 4.4-6 (Rev. 18A)
p. 4.4-7 (Rev. 18A)
p. 4.4-8 (Rev. 18A)
p. 4.4-9 (Rev. 18A)
t. 4.4-1 (Rev. 18A)
p. 4.5-1 (Rev. 18A)
p. 4.5-2 (Rev. 18A)
p. 4.5-3 (Rev. 18A)
p. 4.5-4 (Rev. 18A)
f. 4.5-1 (Rev. 18A)
p. 4A-1 (Rev. 18A)
p. 4A-2 (Rev. 18A)
t. 4A-1 (Rev. 18A)
t. 4A-2 (sheet 1) (Rev. 18A)
t. 4A-2 (sheet 2) (Rev. 18A)
f. 4A-1 (Rev. 18A)
f. 4A-2 (Rev. 18A)
p. i (chapter 5) (Rev. 18A)
p. ii (chapter 5) (Rev. 18A)
p. iii (chapter 5) (Rev. 18A)
p. iv (chapter 5) (Rev. 18A)
p. v (chapter 5) (Rev. 18A)
p. vi (chapter 5) (Rev. 18A)
p. vii (chapter 5) (Rev. 18A)
p. viii (chapter 5) (Rev. 18A)
p. ix (chapter 5) (Rev. 18A)
p. 5.1-1 (Rev. 0)
p. 5.1-2 (Rev. 0)
p. 5.1-3 (Rev. 13A)
p. 5.1-4 (Rev. 0)
f. 5.1-1 (Rev. 17B)
f. 5.1-2 (sheet 1) (Rev. 18A)
f. 5.1-2 (sheet 2) (Rev. 18A)
f. 5.1-2 (sheet 3) (Rev. 18A)
p. 5.2-1 (Rev. 17B)
p. 5.2-2 (Rev. 14D)
p. 5.2-3 (Rev. 18A)
p. 5.2-4 (Rev. 17A)
p. 5.2-5 (Rev. 16)
p. 5.2-6 (Rev. 17A)
p. 5.2-7 (Rev. 17A)
p. 5.2-8 (Rev. 17A)
p. 5.2-9 (Rev. 16)
p. 5.2-10 (Rev. 16)
p. 5.2-11 (Rev. 17A)
p. 5.2-12 (Rev. 17A)
p. 5.2-13 (Rev. 17B)
p. 5.2-14 (Rev. 16)
p. 5.2-15 (Rev. 17A)
p. 5.2-16 (Rev. 17A)
p. 5.2-17 (Rev. 17A)
p. 5.2-18 (Rev. 16)
p. 5.2-19 (Rev. 17B)
p. 5.2-20 (Rev. 17B)
p. 5.2-21 (Rev. 17B)
p. 5.2-22 (Rev. 17B)
p. 5.2-23 (Rev. 17B)
p. 5.2-24 (Rev. 17B)
p. 5.2-25 (Rev. 17B)
p. 5.2-26 (Rev. 17B)
p. 5.2-27 (Rev. 17B)
p. 5.2-28 (Rev. 17B)
p. 5.2-29 (Rev. 17B)
p. 5.2-30 (Rev. 17B)
p. 5.2-31 (Rev. 17B)
p. 5.2-32 (Rev. 17B)
p. 5.2-33 (Rev. 17B)
p. 5.2-34 (Rev. 17B)
p. 5.2-35 (Rev. 17B)
p. 5.2-36 (Rev. 17B)
p. 5.2-37 (Rev. 17B)
p. 5.2-38 (Rev. 17B)
p. 5.2-39 (Rev. 17B)
p. 5.2-40 (Rev. 17B)
p. 5.2-41 (Rev. 17B)

p. 5.2-42 (Rev. 17B)
p. 5.2-43 (Rev. 17B)
p. 5.2-44 (Rev. 17B)
p. 5.2-45 (Rev. 17B)
p. 5.2-46 (Rev. 17B)
p. 5.2-47 (Rev. 17B)
p. 5.2-48 (Rev. 17B)
p. 5.2-49 (Rev. 17B)
p. 5.2-50 (Rev. 17B)
p. 5.2-51 (Rev. 17B)
p. 5.2-52 (Rev. 17B)
p. 5.2-53 (Rev. 17B)
p. 5.2-54 (Rev. 17B)
p. 5.2-55 (Rev. 17B)
p. 5.2-56 (Rev. 17B)
p. 5.2-57 (Rev. 17B)
p. 5.2-58 (Rev. 17B)
p. 5.2-59 (Rev. 17B)
p. 5.2-60 (Rev. 17B)
p. 5.2-61 (Rev. 17B)
p. 5.2-62 (Rev. 17B)
p. 5.2-63 (Rev. 17B)
p. 5.2-64 (Rev. 17B)
p. 5.2-65 (Rev. 17B)
p. 5.2-66 (Rev. 17B)
t. 5.2-1 (sheet 1) (Rev. 17A)
t. 5.2-1 (sheet 2) (Rev. 17A)
t. 5.2-1 (sheet 3) (Rev. 18A)
t. 5.2-2 (sheet 1) (Rev. 13C)
t. 5.2-2 (sheet 2) (Rev. 6)
t. 5.2-2 (sheet 3) (Rev. 0)
t. 5.2-2 (sheet 4) (Rev. 0)
t. 5.2-4 (Rev. 17A)
t. 5.2-5 (Rev. 17B)
t. 5.2-6 (sheet 1) (Rev. 17A)
t. 5.2-6 (sheet 2) (Rev. 17A)
t. 5.2-6 (sheet 3) (Rev. 3)
t. 5.2-7 (Rev. 17B)
t. 5.2-8 (sheet 1) (Rev. 3)
t. 5.2-8 (sheet 2) (Rev. 3)
t. 5.2-9 (sheet 1) (Rev. 8)
t. 5.2-9 (sheet 2) (Rev. 0)
t. 5.2-9 (sheet 3) (Rev. 0)
t. 5.2-9 (sheet 4) (Rev. 3)
t. 5.2-9 (sheet 5) (Rev. 14D)
t. 5.2-10 (sheet 1) (Rev. 3)
t. 5.2-10 (sheet 2) (Rev. 2)
t. 5.2-11 (sheet 1) (Rev. 2)
t. 5.2-11 (sheet 2) (Rev. 0)
t. 5.2-12 (sheet 1) (Rev. 2)
t. 5.2-12 (sheet 2) (Rev. 2)
t. 5.2-13 (sheet 1) (Rev. 2)
t. 5.2-13 (sheet 2) (Rev. 0)
t. 5.2-13 (sheet 3) (Rev. 0)
t. 5.2-13 (sheet 4) (Rev. 0)
t. 5.2-13 (sheet 5) (Rev. 0)
t. 5.2-14 (Rev. 10C)
f. 5.2-1 (Rev. 0)
f. 5.2-2 (Rev. 0)
f. 5.2-3 (Rev. 0)
f. 5.2-4 (Rev. 14D)
f. 5.2-5 (Rev. 18B)
f. 5.2-6 (Rev. 0)
f. 5.2-7 (sheet 1) (Rev. 14D)
f. 5.2-7 (sheet 2) (Rev. 14D)
f. 5.2-8 (sheet 1) (Rev. 14D)
f. 5.2-8 (sheet 2) (Rev. 14D)
f. 5.2-9 (sheet 1) (Rev. 0)
f. 5.2-9 (sheet 2) (Rev. 0)
f. 5.2-10 (Rev. 0)
f. 5.2-11 (Rev. 0)
f. 5.2-12 (Rev. 0)
f. 5.2-13 (Rev. 0)
f. 5.2-14 (Rev. 0)
f. 5.2-15 (Rev. 14D)
f. 5.2-16 (Rev. 14D)
f. 5.2-17 (Rev. 14D)
f. 5.2-18 (Rev. 0)
f. 5.2-19 (Rev. 14D)
f. 5.2-20 (Rev. 14D)
f. 5.2-21 (Rev. 14D)
f. 5.2-22 (Rev. 0)
f. 5.2-23 (sheet 1) (Rev. 0)
f. 5.2-23 (sheet 2) (Rev. 0)
f. 5.2-23 (sheet 3) (Rev. 0)
f. 5.2-23 (sheet 4) (Rev. 0)
f. 5.2-23 (sheet 5) (Rev. 0)
f. 5.2-23 (sheet 6) (Rev. 0)
f. 5.2-23 (sheet 7) (Rev. 0)
f. 5.2-23 (sheet 8) (Rev. 0)
f. 5.2-23 (sheet 9) (Rev. 0)
f. 5.2-23 (sheet 10) (Rev. 0)
f. 5.2-23 (sheet 11) (Rev. 0)
f. 5.2-23 (sheet 12) (Rev. 0)
f. 5.2-23 (sheet 13) (Rev. 0)
f. 5.2-23 (sheet 14) (Rev. 0)
f. 5.2-23 (sheet 15) (Rev. 0)
f. 5.2-24 (sheet 1) (Rev. 0)
f. 5.2-24 (sheet 2) (Rev. 0)
f. 5.2-24 (sheet 3) (Rev. 0)
f. 5.2-24 (sheet 4) (Rev. 0)
f. 5.2-24 (sheet 5) (Rev. 0)
f. 5.2-25 (Rev. 0)
f. 5.2-26 (sheet 1) (Rev. 0)

f. 5.2-26 (sheet 2) (Rev. 0)
f. 5.2-27 (Rev. 0)
f. 5.2-28 (Rev. 0)
f. 5.2-29 (Rev. 0)
f. 5.2-30 (Rev. 0)
f. 5.2-31 (Rev. 17B)
f. 5.2-32 (Rev. 17B)
f. 5.2-33 (Rev. 17B)
f. 5.2-34 (Rev. 17B)
p. 5.3-1 (Rev. 18A)
p. 5.4-1 (Rev. 2)
p. 5.4-2 (Rev. 0)
p. 5.4-3 (Rev. 13C)
p. 5.4-4 (Rev. 0)
p. 5.4-5 (Rev. 0)
p. 5.4-6 (Rev. 0)
p. 5.4-7 (Rev. 17A)
p. 5.4-8 (Rev. 17B)
p. 5.4-9 (Rev. 17B)
p. 5.4-10 (Rev. 18A)
t. 5.4-1 (Rev. 12B)
f. 5.4-1 (Rev. 17A)
f. 5.4-2 (Rev. 12B)
p. 5.5-1 (Rev. 18A)
p. 5.5-2 (Rev. 0)
p. 5.5-3 (Rev. 11C)
p. 5.5-4 (Rev. 18A)
p. 5.5-5 (Rev. 18A)
p. 5.5-6 (Rev. 18A)
p. 5.5-7 (Rev. 3)
p. 5.5-8 (Rev. 3)
p. 5.5-8a (Rev. 3)
p. 5.5-8b (Rev. 3)
p. 5.5-9 (Rev. 0)
p. 5.5-10 (Rev. 18A)
p. 5.5-11 (Rev. 18A)
p. 5.5-12 (Rev. 18A)
p. 5.5-13 (Rev. 17A)
p. 5.5-14 (Rev. 11A)
p. 5.5-15 (Rev. 17A)
p. 5.5-16 (Rev. 17A)
p. 5.5-17 (Rev. 0)
p. 5.5-18 (Rev. 17A)
p. 5.5-19 (Rev. 0)
p. 5.5-20 (Rev. 14D)
p. 5.5-21 (Rev. 14D)
p. 5.5-22 (Rev. 14D)
p. 5.5-23 (Rev. 14D)
p. 5.5-23a (Rev. 14D)
p. 5.5-23b (Rev. 1)
p. 5.5-24 (Rev. 12C)
p. 5.5-25 (Rev. 5)
p. 5.5-26 (Rev. 14D)
p. 5.5-27 (Rev. 14D)
p. 5.5-28 (Rev. 14D)
p. 5.5-29 (Rev. 17A)
p. 5.5-29a (Rev. 10C)
p. 5.5-29b (Rev. 10C)
p. 5.5-30 (Rev. 5)
p. 5.5-31 (Rev. 17A)
p. 5.5-32 (Rev. 14D)
p. 5.5-33 (Rev. 14D)
p. 5.5-34 (Rev. 14D)
p. 5.5-35 (Rev. 2)
p. 5.5-36 (Rev. 5)
p. 5.5-37 (Rev. 17B)
p. 5.5-38 (Rev. 0)
p. 5.5-39 (Rev. 0)
p. 5.5-40 (Rev. 2)
p. 5.5-41 (Rev. 10A)
p. 5.5-42 (Rev. 3)
p. 5.5-43 (Rev. 2)
p. 5.5-44 (Rev. 0)
p. 5.5-45 (Rev. 17A)
p. 5.5-46 (Rev. 0)
p. 5.5-47 (Rev. 0)
p. 5.5-48 (Rev. 17A)
p. 5.5-49 (Rev. 16)
p. 5.5-50 (Rev. 14C)
p. 5.5-51 (Rev. 0)
p. 5.5-52 (Rev. 0)
p. 5.5-53 (Rev. 18A)
p. 5.5-54 (Rev. 11A)
p. 5.5-55 (Rev. 2)
p. 5.5-56 (Rev. 16)
p. 5.5-57 (Rev. 18A)
p. 5.5-58 (Rev. 18A)
p. 5.5-59 (Rev. 16)
t. 5.5-1 (sheet 1) (Rev. 18A)
t. 5.5-1 (sheet 2) (Rev. 0)
t. 5.5-3 (sheet 1) (Rev. 6)
t. 5.5-3 (sheet 2) (Rev. 0)
t. 5.5-4 (sheet 1) (Rev. 5)
t. 5.5-4 (sheet 2) (Rev. 5)
t. 5.5-4 (sheet 3) (Rev. 0)
t. 5.5-4 (sheet 4) (Rev. 0)
t. 5.5-5 (sheet 1) (Rev. 2)
t. 5.5-5 (sheet 2) (Rev. 2)
t. 5.5-5 (sheet 3) (Rev. 2)
t. 5.5-5 (sheet 4) (Rev. 2)
t. 5.5-5 (sheet 5) (Rev. 2)
t. 5.5-5 (sheet 6) (Rev. 2)
t. 5.5-5 (sheet 7) (Rev. 2)
t. 5.5-5 (sheet 8) (Rev. 2)

t. 5.5-5 (sheet 9) (Rev. 2)
t. 5.5-5 (sheet 10) (Rev. 2)
t. 5.5-5 (sheet 11) (Rev. 2)
t. 5.5-5 (sheet 12) (Rev. 3)
t. 5.5-5 (sheet 13) (Rev. 2)
t. 5.5-5 (sheet 14) (Rev. 2)
t. 5.5-5 (sheet 15) (Rev. 2)
t. 5.5-5 (sheet 16) (Rev. 2)
t. 5.5-5 (sheet 17) (Rev. 2)
t. 5.5-5 (sheet 18) (Rev. 2)
t. 5.5-6 (Rev. 16)
f. 5.5-1 (Rev. 3)
f. 5.5-2 (Rev. 18A)
f. 5.5-3 (Rev. 0)
f. 5.5-4 (Rev. 0)
f. 5.5-5 (Rev. 0)
f. 5.5-6 (Rev. 0)
f. 5.5-7 (sheet 1) (Rev. 18A)
f. 5.5-7 (sheet 2) (Rev. 18A)
f. 5.5-8 (Rev. 17B)
f. 5.5-9 (sheet 1) (Rev. 18A)
f. 5.5-9 (sheet 2) (Rev. 18A)
f. 5.5-10 (sheet 1) (Rev. 17B)
f. 5.5-10 (sheet 2) (Rev. 15A)
f. 5.5-11 (sheet 1) (Rev. 4)
f. 5.5-11 (sheet 2) (Rev. 5)
f. 5.5-12 (Rev. 0)
f. 5.5-14 (sheet 1) (Rev. 18A)
f. 5.5-14 (sheet 2) (Rev. 17B)
f. 5.5-15 (sheet 1) (Rev. 6)
f. 5.5-15 (sheet 2) (Rev. 17B)
f. 5.5-16 (Rev. 0)
f. 5.5-17 (Rev. 0)
f. 5.5-19 (Rev. 2)
f. 5.5-20 (Rev. 2)
f. 5.5-21 (Rev. 17A)
p. 5.6-1 (Rev. 0)
p. 5.6-2 (Rev. 0)
p. 5A-1 (Rev. 18A)
p. 5A-2 (Rev. 18A)
p. 5A-3 (Rev. 18A)
p. 5A-4 (Rev. 18A)
p. 5A-5 (Rev. 18A)
p. 5A-6 (Rev. 18A)
p. 5A-7 (Rev. 18A)
p. 5A-8 (Rev. 18A)
f. 5A-1 (Rev. 18A)
f. 5A-2 (sheet 1) (Rev. 18A)
f. 5A-2 (sheet 2) (Rev. 18A)
f. 5A-3 (sheet 1) (Rev. 18A)
f. 5A-3 (sheet 2) (Rev. 18A)
f. 5A-4 (sheet 1) (Rev. 18A)
f. 5A-4 (sheet 2) (Rev. 18A)
f. 5A-5 (Rev. 18A)
f. 5A-6 (Rev. 18A)
p. i (chapter 6) (Rev. 14A)
p. ii (chapter 6) (Rev. 14A)
p. iii (chapter 6) (Rev. 18A)
p. iv (chapter 6) (Rev. 14D)
p. v (chapter 6) (Rev. 14D)
p. vi (chapter 6) (Rev. 17B)
p. vii (chapter 6) (Rev. 17B)
p. viii (chapter 6) (Rev. 17B)
p. ix (chapter 6) (Rev. 14D)
p. x (chapter 6) (Rev. 17B)
p. xi (chapter 6) (Rev. 14D)
p. xii (chapter 6) (Rev. 14D)
p. xiii (chapter 6) (Rev. 14D)
p. 6.1-1 (Rev. 18A)
p. 6.1-2 (Rev. 18A)
p. 6.1-3 (Rev. 18A)
t. 6.1-1 (Rev. 4)
p. 6.2-1 (Rev. 0)
p. 6.2-2 (Rev. 0)
p. 6.2-3 (Rev. 1)
p. 6.2-4 (Rev. 0)
p. 6.2-5 (Rev. 0)
p. 6.2-6 (Rev. 16)
p. 6.2-7 (Rev. 5)
p. 6.2-8 (Rev. 0)
p. 6.2-9 (Rev. 0)
p. 6.2-10 (Rev. 0)
p. 6.2-11 (Rev. 5)
p. 6.2-12 (Rev. 1)
p. 6.2-13 (Rev. 1)
p. 6.2-14 (Rev. 1)
p. 6.2-15 (Rev. 0)
p. 6.2-16 (Rev. 16)
p. 6.2-16a (Rev. 16)
p. 6.2-16b (Rev. 16)
p. 6.2-17 (Rev. 1)
p. 6.2-18 (Rev. 2)
p. 6.2-19 (Rev. 16)
p. 6.2-20 (Rev. 17A)
p. 6.2-21 (Rev. 0)
p. 6.2-22 (Rev. 0)
p. 6.2-23 (Rev. 2)
p. 6.2-24 (Rev. 16)
p. 6.2-25 (Rev. 17A)
p. 6.2-26 (Rev. 17A)
p. 6.2-27 (Rev. 16)
p. 6.2-28 (Rev. 0)
p. 6.2-29 (Rev. 0)
p. 6.2-30 (Rev. 14D)

p. 6.2-30a (Rev. 4)
p. 6.2-30b (Rev. 2)
p. 6.2-31 (Rev. 14D)
p. 6.2-32 (Rev. 1)
p. 6.2-33 (Rev. 0)
p. 6.2-34 (Rev. 1)
p. 6.2-35 (Rev. 1)
p. 6.2-36 (Rev. 0)
p. 6.2-37 (Rev. 18A)
p. 6.2-38 (Rev. 14D)
p. 6.2-39 (Rev. 14A)
p. 6.2-40 (Rev. 14A)
p. 6.2-41 (Rev. 14A)
p. 6.2-42 (Rev. 14A)
p. 6.2-43 (Rev. 14D)
p. 6.2-43a (Rev. 18A)
p. 6.2-43b (Rev. 17B)
p. 6.2-44 (Rev. 14A)
p. 6.2-45 (Rev. 0)
p. 6.2-46 (Rev. 18A)
p. 6.2-47 (Rev. 18A)
p. 6.2-47a (Rev. 17B)
p. 6.2-47b (Rev. 17B)
p. 6.2-47c (Rev. 15B)
p. 6.2-47d (Rev. 15B)
p. 6.2-48 (Rev. 14D)
p. 6.2-49 (Rev. 18A)
p. 6.2-50 (Rev. 18A)
p. 6.2-51 (Rev. 18A)
p. 6.2-52 (Rev. 18B)
p. 6.2-53 (Rev. 17B)
p. 6.2-53a (Rev. 16)
p. 6.2-53b (Rev. 14D)
p. 6.2-53c (Rev. 14D)
p. 6.2-53d (Rev. 14D)
p. 6.2-54 (Rev. 14D)
p. 6.2-55 (Rev. 14D)
p. 6.2-56 (Rev. 17B)
p. 6.2-57 (Rev. 18A)
p. 6.2-58 (Rev. 18A)
p. 6.2-59 (Rev. 18A)
p. 6.2-60 (Rev. 18A)
p. 6.2-61 (Rev. 18A)
p. 6.2-62 (Rev. 18A)
p. 6.2-63 (Rev. 18A)
p. 6.2-64 (Rev. 18A)
p. 6.2-64a (Rev. 18A)
p. 6.2-64b (Rev. 18A)
p. 6.2-65 (Rev. 16)
p. 6.2-66 (Rev. 17A)
p. 6.2-67 (Rev. 18A)
p. 6.2-68 (Rev. 17B)
p. 6.2-69 (Rev. 17B)
p. 6.2-70 (Rev. 17B)
p. 6.2-71 (Rev. 18A)
p. 6.2-72 (Rev. 18A)
p. 6.2-73 (Rev. 18A)
p. 6.2-74 (Rev. 18A)
p. 6.2-75 (Rev. 18A)
p. 6.2-76 (Rev. 18A)
p. 6.2-77 (Rev. 18A)
p. 6.2-78 (Rev. 14D)
p. 6.2-79 (Rev. 18A)
p. 6.2-80 (Rev. 18A)
p. 6.2-81 (Rev. 16)
p. 6.2-82 (Rev. 16)
p. 6.2-83 (Rev. 11D)
p. 6.2-84 (Rev. 0)
p. 6.2-85 (Rev. 18A)
p. 6.2-86 (Rev. 0)
p. 6.2-87 (Rev. 16)
p. 6.2-88 (Rev. 16)
p. 6.2-89 (Rev. 17B)
p. 6.2-90 (Rev. 16)
p. 6.2-91 (Rev. 6)
p. 6.2-92 (Rev. 17B)
p. 6.2-93 (Rev. 11D)
p. 6.2-94 (Rev. 17B)
p. 6.2-95 (Rev. 11D)
p. 6.2-95a (Rev. 11D)
p. 6.2-95b (Rev. 1)
p. 6.2-96 (Rev. 0)
p. 6.2-97 (Rev. 17B)
p. 6.2-98 (Rev. 17B)
p. 6.2-99 (Rev. 17A)
p. 6.2-100 (Rev. 17A)
p. 6.2-100a (Rev. 17A)
p. 6.2-100b (Rev. 17B)
p. 6.2-101 (Rev. 17B)
p. 6.2-102 (Rev. 17B)
p. 6.2-103 (Rev. 17B)
p. 6.2-104 (Rev. 1)
p. 6.2-105 (Rev. 16)
p. 6.2-106 (Rev. 17A)
p. 6.2-107 (Rev. 1)
p. 6.2-108 (Rev. 16)
p. 6.2-109 (Rev. 17B)
p. 6.2-110 (Rev. 17B)
p. 6.2-111 (Rev. 0)
p. 6.2-112 (Rev. 1)
p. 6.2-113 (Rev. 0)
p. 6.2-114 (Rev. 0)
p. 6.2-115 (Rev. 0)
p. 6.2-116 (Rev. 0)

p. 6.2-117 (Rev. 17B)
p. 6.2-118 (Rev. 16)
p. 6.2-119 (Rev. 16)
t. 6.2-1 (sheet 1) (Rev. 17B)
t. 6.2-1 (sheet 2) (Rev. 17B)
t. 6.2-1 (sheet 3) (Rev. 17B)
t. 6.2-1 (sheet 4) (Rev. 14D)
t. 6.2-1 (sheet 5) (Rev. 17B)
t. 6.2-2 (Rev. 0)
t. 6.2-3 (Rev. 0)
t. 6.2-4 (Rev. 0)
t. 6.2-5 (sheet 1) (Rev. 14D)
t. 6.2-5 (sheet 2) (Rev. 17B)
t. 6.2-5 (sheet 3) (Rev. 17B)
t. 6.2-5 (sheet 4) (Rev. 14D)
t. 6.2-5 (sheet 5) (Rev. 14D)
t. 6.2-5 (sheet 6) (Rev. 17B)
t. 6.2-5 (sheet 7) (Rev. 14D)
t. 6.2-5 (sheet 8) (Rev. 17B)
t. 6.2-5 (sheet 9) (Rev. 14D)
t. 6.2-5 (sheet 10) (Rev. 14D)
t. 6.2-5 (sheet 11) (Rev. 14D)
t. 6.2-5 (sheet 12) (Rev. 17B)
t. 6.2-5 (sheet 13) (Rev. 14D)
t. 6.2-5 (sheet 14) (Rev. 14D)
t. 6.2-5 (sheet 15) (Rev. 14D)
t. 6.2-5 (sheet 16) (Rev. 16)
t. 6.2-5 (sheet 17) (Rev. 17A)
t. 6.2-5 (sheet 18) (Rev. 16)
t. 6.2-5 (sheet 19) (Rev. 16)
t. 6.2-5 (sheet 20) (Rev. 14D)
t. 6.2-5 (sheet 21) (Rev. 17B)
t. 6.2-5 (sheet 22) (Rev. 14D)
t. 6.2-5 (sheet 23) (Rev. 14D)
t. 6.2-5 (sheet 24) (Rev. 17B)
t. 6.2-5 (sheet 25) (Rev. 17B)
t. 6.2-5 (sheet 26) (Rev. 14D)
t. 6.2-5 (sheet 27) (Rev. 14D)
t. 6.2-5 (sheet 28) (Rev. 14D)
t. 6.2-5 (sheet 29) (Rev. 17B)
t. 6.2-5 (sheet 30) (Rev. 17B)
t. 6.2-5 (sheet 31) (Rev. 14D)
t. 6.2-5 (sheet 32) (Rev. 17A)
t. 6.2-5 (sheet 33) (Rev. 14D)
t. 6.2-5 (sheet 34) (Rev. 14D)
t. 6.2-5 (sheet 35) (Rev. 14D)
t. 6.2-5 (sheet 36) (Rev. 14D)
t. 6.2-6 (sheet 1) (Rev. 13A)
t. 6.2-6 (sheet 2) (Rev. 14A)
t. 6.2-6 (sheet 3) (Rev. 14A)
t. 6.2-7 (Rev. 2)
t. 6.2-8 (Rev. 17B)
t. 6.2-9 (Rev. 2)
t. 6.2-10 (sheet 1) (Rev. 0)
t. 6.2-10 (sheet 2) (Rev. 0)
t. 6.2-10 (sheet 3) (Rev. 0)
t. 6.2-10 (sheet 4) (Rev. 0)
t. 6.2-10 (sheet 5) (Rev. 0)
t. 6.2-10 (sheet 6) (Rev. 0)
t. 6.2-10 (sheet 7) (Rev. 0)
t. 6.2-10 (sheet 8) (Rev. 0)
t. 6.2-11 (sheet 1) (Rev. 16)
t. 6.2-11 (sheet 2) (Rev. 16)
t. 6.2-11 (sheet 3) (Rev. 16)
t. 6.2-12 (sheet 1) (Rev. 16)
t. 6.2-12 (sheet 2) (Rev. 13C)
t. 6.2-12 (sheet 3) (Rev. 0)
t. 6.2-13 (Rev. 16)
t. 6.2-14 (sheet 1) (Rev. 0)
t. 6.2-14 (sheet 2) (Rev. 14D)
t. 6.2-15 (Rev. 18A)
t. 6.2-16 (Rev. 0)
t. 6.2-17 (Rev. 5)
f. 6.2-1 (Rev. 18A)
f. 6.2-2 (Rev. 0)
f. 6.2-3 (Rev. 0)
f. 6.2-4 (Rev. 0)
f. 6.2-5 (Rev. 0)
f. 6.2-6 (Rev. 0)
f. 6.2-7 (Rev. 0)
f. 6.2-8 (Rev. 0)
f. 6.2-9 (Rev. 0)
f. 6.2-10 (Rev. 0)
f. 6.2-11 (Rev. 0)
f. 6.2-12 (Rev. 0)
f. 6.2-13 (Rev. 16)
f. 6.2-14 (Rev. 0)
f. 6.2-15 (Rev. 0)
f. 6.2-16 (Rev. 11D)
f. 6.2-17 (Rev. 11D)
f. 6.2-18 (Rev. 11D)
f. 6.2-19 (Rev. 14D)
f. 6.2-20 (Rev. 17A)
f. 6.2-21 (Rev. 4)
f. 6.2-22 (Rev. 0)
f. 6.2-23 (Rev. 0)
f. 6.2-24 (Rev. 0)
f. 6.2-25 (Rev. 0)
f. 6.2-26 (Rev. 0)
f. 6.2-27 (Rev. 17B)
f. 6.2-28 (Rev. 17B)
f. 6.2-29 (Rev. 17B)
f. 6.2-30 (Rev. 0)
f. 6.2-31 (Rev. 0)

f. 6.2-32 (Rev. 0)
f. 6.2-33 (Rev. 0)
f. 6.2-35 (Rev. 0)
f. 6.2-36 (Rev. 0)
f. 6.2-37 (Rev. 0)
f. 6.2-39 (Rev. 18A)
f. 6.2-40 (Rev. 18A)
f. 6.2-41 (Rev. 0)
f. 6.2-42 (Rev. 0)
f. 6.2-43 (Rev. 0)
f. 6.2-44 (sheet 1) (Rev. 18A)
f. 6.2-44 (sheet 2) (Rev. 18A)
f. 6.2-45 (Rev. 17B)
f. 6.2-46 (Rev. 17B)
f. 6.2-47 (Rev. 17B)
f. 6.2-48 (Rev. 17B)
f. 6.2-51 (Rev. 0)
f. 6.2-52 (Rev. 1)
f. 6.2-53 (Rev. 5)
f. 6.2-54 (Rev. 5)
f. 6.2-55 (Rev. 5)
f. 6.2-56 (Rev. 5)
f. 6.2-57 (Rev. 5)
f. 6.2-58 (Rev. 5)
f. 6.2-59 (Rev. 5)
f. 6.2-60 (Rev. 5)
f. 6.2-61 (Rev. 5)
f. 6.2-62 (Rev. 5)
f. 6.2-63 (Rev. 9A)
f. 6.2-64 (Rev. 9A)
f. 6.2-65 (Rev. 17B)
f. 6.2-66 (Rev. 17B)
p. 6.3-1 (Rev. 18A)
p. 6.3-2 (Rev. 18A)
p. 6.3-3 (Rev. 18A)
p. 6.3-4 (Rev. 18A)
p. 6.3-5 (Rev. 18A)
p. 6.3-6 (Rev. 17B)
p. 6.3-7 (Rev. 17B)
p. 6.3-8 (Rev. 17B)
p. 6.3-9 (Rev. 18A)
p. 6.3-10 (Rev. 17B)
p. 6.3-11 (Rev. 6)
p. 6.3-12 (Rev. 0)
p. 6.3-13 (Rev. 17A)
p. 6.3-14 (Rev. 16)
p. 6.3-14a (Rev. 14D)
p. 6.3-14b (Rev. 14D)
p. 6.3-15 (Rev. 0)
p. 6.3-16 (Rev. 18A)
p. 6.3-17 (Rev. 14D)
p. 6.3-18 (Rev. 17A)
p. 6.3-19 (Rev. 18A)
p. 6.3-20 (Rev. 18A)
p. 6.3-21 (Rev. 17B)
p. 6.3-22 (Rev. 17B)
p. 6.3-23 (Rev. 17B)
p. 6.3-24 (Rev. 17B)
p. 6.3-25 (Rev. 18A)
p. 6.3-26 (Rev. 18A)
p. 6.3-27 (Rev. 18A)
p. 6.3-28 (Rev. 17B)
p. 6.3-29 (Rev. 17B)
p. 6.3-30 (Rev. 17B)
p. 6.3-31 (Rev. 17B)
p. 6.3-32 (Rev. 17B)
p. 6.3-33 (Rev. 18A)
p. 6.3-34 (Rev. 17B)
p. 6.3-35 (Rev. 17B)
p. 6.3-36 (Rev. 18A)
p. 6.3-37 (Rev. 17B)
p. 6.3-38 (Rev. 17B)
p. 6.3-39 (Rev. 17B)
p. 6.3-40 (Rev. 17B)
p. 6.3-41 (Rev. 17B)
p. 6.3-42 (Rev. 17B)
p. 6.3-43 (Rev. 18A)
p. 6.3-44 (Rev. 17B)
t. 6.3-1 (Rev. 17B)
t. 6.3-2 (Rev. 17B)
t. 6.3-3 (Rev. 16)
t. 6.3-4 (Rev. 16)
t. 6.3-5 (Rev. 16)
t. 6.3-6 (Rev. 17B)
t. 6.3-7 (sheet 1) (Rev. 17B)
t. 6.3-7 (sheet 2) (Rev. 17B)
t. 6.3-8 (Rev. 17B)
f. 6.3-1 (sheet 1) (Rev. 17B)
f. 6.3-1 (sheet 2) (Rev. 18A)
f. 6.3-2 (Rev. 17B)
f. 6.3-3 (Rev. 17B)
f. 6.3-4 (Rev. 17B)
f. 6.3-5 (Rev. 6)
f. 6.3-6 (Rev. 6)
f. 6.3-7 (Rev. 17B)
f. 6.3-8 (Rev. 7)
f. 6.3-9 (Rev. 0)
p. 6.4-1 (Rev. 18A)
p. 6.4-2 (Rev. 10C)
p. 6.4-3 (Rev. 14D)
p. 6.4-4 (Rev. 14D)
p. 6.4-5 (Rev. 14D)
p. 6.4-6 (Rev. 10C)
p. 6.4-7 (Rev. 14D)

p. 6.4-8 (Rev. 14D)
p. 6.4-9 (Rev. 18A)
t. 6.4-1 (sheet 1) (Rev. 14D)
t. 6.4-1 (sheet 2) (Rev. 14D)
t. 6.4-2 (sheet 1) (Rev. 11C)
t. 6.4-2 (sheet 2) (Rev. 0)
f. 6.4-1 (Rev. 17B)
p. 6.5-1 (Rev. 13A)
p. 6A-1 (Rev. 0)
p. 6A-2 (Rev. 1)
p. 6A-3 (Rev. 0)
p. 6A-4 (Rev. 0)
p. 6A-5 (Rev. 0)
p. 6A-6 (Rev. 0)
p. 6A-7 (Rev. 0)
p. 6A-8 (Rev. 0)
p. 6A-9 (Rev. 0)
p. 6A-10 (Rev. 0)
p. 6A-11 (Rev. 0)
p. 6A-12 (Rev. 0)
p. 6A-13 (Rev. 0)
p. 6A-14 (Rev. 0)
p. 6A-15 (Rev. 0)
p. 6A-16 (Rev. 0)
p. 6A-17 (Rev. 0)
p. 6A-18 (Rev. 0)
p. 6A-19 (Rev. 0)
p. 6A-20 (Rev. 0)
p. 6A-21 (Rev. 0)
p. 6A-22 (Rev. 0)
p. 6A-23 (Rev. 0)
p. 6A-24 (Rev. 0)
p. 6A-25 (Rev. 0)
p. 6A-26 (Rev. 0)
p. 6A-27 (Rev. 0)
p. 6A-28 (Rev. 0)
p. 6A-29 (Rev. 0)
p. 6A-30 (Rev. 0)
p. 6A-31 (Rev. 0)
p. 6A-32 (Rev. 0)
p. 6A-33 (Rev. 0)
p. 6A-34 (Rev. 0)
p. 6A-35 (Rev. 0)
p. 6A-36 (Rev. 0)
p. 6A-37 (Rev. 0)
p. 6A-38 (Rev. 0)
p. 6A-39 (Rev. 0)
p. 6A-40 (Rev. 0)
p. 6A-41 (Rev. 0)
p. 6A-42 (Rev. 0)
p. 6A-43 (Rev. 0)
p. 6A-44 (Rev. 0)
p. 6A-45 (Rev. 0)
p. 6A-46 (Rev. 0)
p. 6A-47 (Rev. 0)
p. 6A-48 (Rev. 0)
p. 6A-49 (Rev. 0)
p. 6A-50 (Rev. 0)
p. 6A-51 (Rev. 0)
p. 6A-52 (Rev. 1)
p. 6A-53 (Rev. 17B)
p. 6A-53a (Rev. 14D)
p. 6A-53b (Rev. 1)
p. 6A-54 (Rev. 17B)
p. 6A-55 (Rev. 0)
p. 6A-56 (Rev. 0)
p. 6A-57 (Rev. 17B)
p. 6A-58 (Rev. 17B)
p. 6A-59 (Rev. 2)
p. 6A-60 (Rev. 0)
p. 6A-61 (Rev. 1)
p. 6A-62 (Rev. 0)
p. 6A-63 (Rev. 1)
p. 6A-64 (Rev. 0)
p. 6A-65 (Rev. 0)
p. 6A-66 (Rev. 0)
p. 6A-67 (Rev. 0)
p. 6A-68 (Rev. 1)
p. 6A-69 (Rev. 0)
p. 6A-70 (Rev. 1)
p. 6A-71 (Rev. 1)
p. 6A-72 (Rev. 1)
p. 6A-73 (Rev. 1)
p. 6A-74 (Rev. 1)
p. 6A-75 (Rev. 0)
p. 6A-76 (Rev. 0)
p. 6A-77 (Rev. 0)
p. 6A-78 (Rev. 0)
p. 6A-79 (Rev. 0)
p. 6A-80 (Rev. 0)
p. 6A-81 (Rev. 0)
p. 6A-82 (Rev. 1)
p. 6A-83 (Rev. 0)
p. 6A-84 (Rev. 0)
p. 6A-85 (Rev. 0)
p. 6A-86 (Rev. 0)
p. 6A-87 (Rev. 17A)
p. 6A-88 (Rev. 0)
p. 6A-89 (Rev. 0)
p. 6A-90 (Rev. 0)
p. 6A-91 (Rev. 12B)
p. 6A-92 (Rev. 12B)
p. 6A-93 (Rev. 0)
p. 6A-94 (Rev. 16)

p. 6A-95 (Rev. 16)
p. 6A-96 (Rev. 1)
p. 6A-97 (Rev. 17B)
p. 6A-98 (Rev. 17B)
p. 6A-99 (Rev. 17B)
p. 6A-100 (Rev. 17B)
p. 6A-101 (Rev. 0)
t. 6A-1 (Rev. 0)
t. 6A-2 (Rev. 0)
t. 6A-3 (Rev. 0)
t. 6A-4 (sheet 1) (Rev. 17B)
t. 6A-4 (sheet 2) (Rev. 17B)
t. 6A-5 (Rev. 17B)
t. 6A-5A (Rev. 17B)
t. 6A-6 (sheet 1) (Rev. 0)
t. 6A-6 (sheet 2) (Rev. 0)
t. 6A-7 (sheet 1) (Rev. 0)
t. 6A-7 (sheet 2) (Rev. 0)
t. 6A-7 (sheet 3) (Rev. 0)
t. 6A-8 (sheet 1) (Rev. 0)
t. 6A-8 (sheet 2) (Rev. 0)
t. 6A-8 (sheet 3) (Rev. 0)
t. 6A-9 (Rev. 12B)
t. 6A-10 (Rev. 12B)
t. 6A-11 (sheet 1) (Rev. 0)
t. 6A-11 (sheet 2) (Rev. 0)
t. 6A-11 (sheet 3) (Rev. 0)
t. 6A-11 (sheet 4) (Rev. 0)
t. 6A-12 (sheet 1) (Rev. 0)
t. 6A-12 (sheet 2) (Rev. 0)
t. 6A-13 (Rev. 0)
f. 6A-1 (Rev. 0)
f. 6A-2 (Rev. 0)
f. 6A-3 (Rev. 0)
f. 6A-4 (Rev. 0)
f. 6A-5 (Rev. 0)
f. 6A-6 (Rev. 0)
f. 6A-7 (Rev. 0)
f. 6A-8 (Rev. 0)
f. 6A-9 (Rev. 0)
f. 6A-10 (Rev. 0)
f. 6A-11 (Rev. 0)
f. 6A-12 (Rev. 0)
f. 6A-13 (Rev. 0)
f. 6A-14 (Rev. 0)
f. 6A-15 (Rev. 0)
f. 6A-16 (Rev. 0)
f. 6A-17 (Rev. 0)
f. 6A-18 (Rev. 0)
f. 6A-19 (Rev. 0)
f. 6A-20 (Rev. 0)
f. 6A-21 (Rev. 0)
f. 6A-22 (Rev. 1)
f. 6A-23 (Rev. 0)
f. 6A-24 (Rev. 1)
f. 6A-25 (Rev. 0)
f. 6A-26 (Rev. 0)
f. 6A-27 (Rev. 0)
f. 6A-28 (Rev. 0)
f. 6A-29 (Rev. 0)
f. 6A-30 (Rev. 0)
f. 6A-31 (Rev. 0)
f. 6A-32 (Rev. 0)
f. 6A-33 (sheet 1) (Rev. 0)
f. 6A-33 (sheet 2) (Rev. 0)
f. 6A-33 (sheet 3) (Rev. 0)
f. 6A-34 (sheet 1) (Rev. 0)
f. 6A-34 (sheet 2) (Rev. 0)
f. 6A-34 (sheet 3) (Rev. 0)
f. 6A-35 (Rev. 0)
f. 6A-36 (sheet 1) (Rev. 0)
f. 6A-36 (sheet 2) (Rev. 0)
f. 6A-36 (sheet 3) (Rev. 0)
f. 6A-36 (sheet 4) (Rev. 0)
f. 6A-37 (Rev. 0)
f. 6A-38 (Rev. 0)
f. 6A-39 (Rev. 0)
f. 6A-40 (Rev. 0)
f. 6A-41 (Rev. 0)
f. 6A-42 (Rev. 0)
f. 6A-43 (Rev. 0)
f. 6A-44 (Rev. 1)
f. 6A-45 (Rev. 0)
f. 6A-46 (Rev. 0)
f. 6A-47 (sheet 1) (Rev. 4)
f. 6A-47 (sheet 2) (Rev. 4)
f. 6A-49 (Rev. 0)
f. 6A-50 (Rev. 0)
f. 6A-51 (Rev. 0)
f. 6A-52 (Rev. 0)
f. 6A-53 (Rev. 0)
f. 6A-54 (Rev. 0)
f. 6A-55 (Rev. 0)
f. 6A-56 (Rev. 0)
f. 6A-57 (Rev. 0)
f. 6A-58 (Rev. 0)
f. 6A-59 (Rev. 0)
f. 6A-60 (Rev. 0)
f. 6A-61 (Rev. 0)
f. 6A-62 (sheet 1) (Rev. 0)
f. 6A-62 (sheet 2) (Rev. 0)
f. 6A-62 (sheet 3) (Rev. 0)
f. 6A-63 (Rev. 1)

p. i (chapter 7) (Rev. 18A)
p. ii (chapter 7) (Rev. 18A)
p. iii (chapter 7) (Rev. 18B)
p. iv (chapter 7) (Rev. 18A)
p. iv(a) (chapter 7) (Rev. 18A)
p. iv(b) (chapter 7) (Rev. 18A)
p. v (chapter 7) (Rev. 18A)
p. vi (chapter 7) (Rev. 18A)
p. vii (chapter 7) (Rev. 18A)
p. viii (chapter 7) (Rev. 18A)
p. ix (chapter 7) (Rev. 18A)
p. x (chapter 7) (Rev. 18A)
p. xi (chapter 7) (Rev. 18A)
p. xii (chapter 7) (Rev. 18B)
p. 7.1-1 (Rev. 0)
p. 7.1-2 (Rev. 18A)
p. 7.1-3 (Rev. 18A)
p. 7.1-4 (Rev. 18A)
p. 7.1-5 (Rev. 13B)
p. 7.1-6 (Rev. 17A)
p. 7.1-7 (Rev. 18A)
p. 7.1-8 (Rev. 18A)
p. 7.1-9 (Rev. 0)
p. 7.1-10 (Rev. 0)
p. 7.1-11 (Rev. 15B)
p. 7.1-12 (Rev. 13A)
p. 7.1-13 (Rev. 14D)
p. 7.1-14 (Rev. 0)
p. 7.1-15 (Rev. 0)
t. 7.1-1 (sheet 1) (Rev. 13A)
t. 7.1-1 (sheet 2) (Rev. 0)
t. 7.1-2 (sheet 1) (Rev. 0)
t. 7.1-2 (sheet 2) (Rev. 3)
t. 7.1-3 (sheet 1) (Rev. 11B)
t. 7.1-3 (sheet 2) (Rev. 3)
f. 7.1-1 (Rev. 10A)
f. 7.1-2 (Rev. 12B)
p. 7.2-1 (Rev. 18A)
p. 7.2-2 (Rev. 0)
p. 7.2-3 (Rev. 0)
p. 7.2-4 (Rev. 0)
p. 7.2-5 (Rev. 16)
p. 7.2-6 (Rev. 17B)
p. 7.2-7 (Rev. 17B)
p. 7.2-8 (Rev. 13B)
p. 7.2-9 (Rev. 17B)
p. 7.2-10 (Rev. 0)
p. 7.2-11 (Rev. 0)
p. 7.2-12 (Rev. 17A)
p. 7.2-13 (Rev. 0)
p. 7.2-14 (Rev. 5)
p. 7.2-15 (Rev. 17A)
p. 7.2-16 (Rev. 0)
p. 7.2-17 (Rev. 0)
p. 7.2-18 (Rev. 18A)
p. 7.2-19 (Rev. 18A)
p. 7.2-20 (Rev. 13B)
p. 7.2-21 (Rev. 18A)
p. 7.2-22 (Rev. 18A)
p. 7.2-23 (Rev. 18A)
p. 7.2-24 (Rev. 0)
p. 7.2-25 (Rev. 0)
p. 7.2-26 (Rev. 0)
p. 7.2-27 (Rev. 13B)
p. 7.2-28 (Rev. 0)
p. 7.2-29 (Rev. 0)
t. 7.2-1 (Rev. 17A)
t. 7.2-2 (Rev. 7)
t. 7.2-3 (Rev. 16)
t. 7.2-4 (Rev. 16)
f. 7.2-1 (sheet 1) (Rev. 17B)
f. 7.2-1 (sheet 2) (Rev. 17B)
f. 7.2-1 (sheet 3) (Rev. 17B)
f. 7.2-1 (sheet 4) (Rev. 5)
f. 7.2-2 (Rev. 17A)
f. 7.2-3 (Rev. 16)
f. 7.2-4 (sheet 1) (Rev. 13B)
f. 7.2-4 (sheet 2) (Rev. 3)
f. 7.2-5 (Rev. 0)
f. 7.2-6 (Rev. 0)
f. 7.2-7 (Rev. 0)
f. 7.2-8 (sheet 1) (Rev. 13A)
f. 7.2-8 (sheet 2) (Rev. 13A)
f. 7.2-9 (Rev. 13B)
p. 7.3-1 (Rev. 4)
p. 7.3-2 (Rev. 3)
p. 7.3-3 (Rev. 17A)
p. 7.3-4 (Rev. 3)
p. 7.3-5 (Rev. 17A)
p. 7.3-6 (Rev. 17A)
p. 7.3-7 (Rev. 10A)
p. 7.3-8 (Rev. 3)
p. 7.3-9 (Rev. 12C)
p. 7.3-10 (Rev. 17A)
p. 7.3-11 (Rev. 14D)
p. 7.3-12 (Rev. 14D)
p. 7.3-13 (Rev. 18A)
p. 7.3-14 (Rev. 11D)
p. 7.3-15 (Rev. 17A)
p. 7.3-16 (Rev. 17A)
p. 7.3-16a (Rev. 11D)
p. 7.3-16b (Rev. 11D)
p. 7.3-17 (Rev. 17A)
p. 7.3-18 (Rev. 14C)

p. 7.3-19 (Rev. 3)
p. 7.3-20 (Rev. 13A)
p. 7.3-20a (Rev. 13A)
p. 7.3-20b (Rev. 13A)
p. 7.3-21 (Rev. 15B)
p. 7.3-22 (Rev. 14C)
p. 7.3-23 (Rev. 14C)
p. 7.3-24 (Rev. 5)
p. 7.3-25 (Rev. 5)
p. 7.3-26 (Rev. 5)
p. 7.3-27 (Rev. 18A)
p. 7.3-28 (Rev. 18A)
p. 7.3-28a (Rev. 14D)
p. 7.3-28b (Rev. 14D)
p. 7.3-29 (Rev. 6)
p. 7.3-30 (Rev. 3)
p. 7.3-31 (Rev. 3)
p. 7.3-32 (Rev. 3)
p. 7.3-33 (Rev. 3)
p. 7.3-34 (Rev. 7)
p. 7.3-35 (Rev. 3)
p. 7.3-36 (Rev. 3)
p. 7.3-37 (Rev. 3)
p. 7.3-38 (Rev. 3)
p. 7.3-39 (Rev. 14C)
p. 7.3-40 (Rev. 14D)
p. 7.3-41 (Rev. 14D)
p. 7.3-42 (Rev. 14D)
p. 7.3-43 (Rev. 14D)
p. 7.3-44 (Rev. 14D)
p. 7.3-44a (Rev. 14D)
p. 7.3-44b (Rev. 14D)
p. 7.3-45 (Rev. 14D)
p. 7.3-46 (Rev. 14D)
p. 7.3-47 (Rev. 14D)
p. 7.3-48 (Rev. 14D)
p. 7.3-49 (Rev. 14D)
p. 7.3-50 (Rev. 17A)
p. 7.3-51 (Rev. 14D)
p. 7.3-52 (Rev. 14D)
p. 7.3-53 (Rev. 14D)
p. 7.3-54 (Rev. 14D)
p. 7.3-55 (Rev. 14D)
p. 7.3-56 (Rev. 14D)
p. 7.3-57 (Rev. 14D)
p. 7.3-58 (Rev. 14D)
p. 7.3-58a (Rev. 14D)
p. 7.3-58b (Rev. 4)
p. 7.3-59 (Rev. 14D)
p. 7.3-60 (Rev. 14D)
p. 7.3-61 (Rev. 14D)
p. 7.3-62 (Rev. 14D)
p. 7.3-63 (Rev. 18A)
p. 7.3-64 (Rev. 14D)
p. 7.3-65 (Rev. 3)
p. 7.3-66 (Rev. 3)
p. 7.3-67 (Rev. 11C)
p. 7.3-68 (Rev. 11C)
p. 7.3-69 (Rev. 14C)
p. 7.3-70 (Rev. 5)
p. 7.3-71 (Rev. 3)
p. 7.3-72 (Rev. 4)
p. 7.3-73 (Rev. 4)
p. 7.3-74 (Rev. 4)
p. 7.3-75 (Rev. 4)
p. 7.3-76 (Rev. 4)
p. 7.3-77 (Rev. 4)
p. 7.3-78 (Rev. 4)
p. 7.3-79 (Rev. 13B)
p. 7.3-80 (Rev. 10C)
p. 7.3-81 (Rev. 17A)
p. 7.3-82 (Rev. 17A)
p. 7.3-83 (Rev. 17A)
p. 7.3-84 (Rev. 13C)
p. 7.3-85 (Rev. 10C)
p. 7.3-86 (Rev. 10C)
t. 7.3-1 (Rev. 17A)
t. 7.3-2 (Rev. 17A)
t. 7.3-3 (Rev. 17A)
t. 7.3-4 (Rev. 17A)
t. 7.3-5 (Rev. 3)
t. 7.3-6 (Rev. 4)
t. 7.3-7 (Rev. 3)
t. 7.3-8 (Rev. 3)
t. 7.3-9 (sheet 1) (Rev. 17A)
t. 7.3-9 (sheet 2) (Rev. 17A)
t. 7.3-9 (sheet 3) (Rev. 17A)
t. 7.3-9 (sheet 4) (Rev. 17A)
f. 7.3-1 (sheet 1) (Rev. 5)
f. 7.3-1 (sheet 2) (Rev. 5)
f. 7.3-1 (sheet 3) (Rev. 6)
f. 7.3-1 (sheet 4) (Rev. 13B)
f. 7.3-1 (sheet 5) (Rev. 11D)
f. 7.3-1 (sheet 6) (Rev. 7)
f. 7.3-1 (sheet 7) (Rev. 13B)
f. 7.3-1 (sheet 8) (Rev. 15A)
f. 7.3-2 (sheet 1) (Rev. 14D)
f. 7.3-2 (sheet 2) (Rev. 17B)
f. 7.3-2 (sheet 3) (Rev. 6)
f. 7.3-2 (sheet 4) (Rev. 17A)
f. 7.3-2 (sheet 5) (Rev. 17A)
f. 7.3-2 (sheet 6) (Rev. 13B)
f. 7.3-2 (sheet 7) (Rev. 5)
f. 7.3-2 (sheet 8) (Rev. 17A)

f. 7.3-2 (sheet 9) (Rev. 17A)
f. 7.3-2 (sheet 10) (Rev. 17A)
f. 7.3-2 (sheet 11) (Rev. 17A)
f. 7.3-2 (sheet 12) (Rev. 13D)
f. 7.3-3 (sheet 1) (Rev. 17A)
f. 7.3-3 (sheet 2) (Rev. 17A)
f. 7.3-3 (sheet 3) (Rev. 5)
f. 7.3-4 (Rev. 3)
f. 7.3-5 (sheet 1) (Rev. 15B)
f. 7.3-5 (sheet 2) (Rev. 6)
f. 7.3-5 (sheet 3) (Rev. 14D)
f. 7.3-5 (sheet 4) (Rev. 14D)
f. 7.3-5 (sheet 5) (Rev. 17B)
f. 7.3-5 (sheet 6) (Rev. 17A)
f. 7.3-5 (sheet 7) (Rev. 14D)
f. 7.3-6 (Rev. 3)
f. 7.3-7 (Rev. 3)
f. 7.3-8 (Rev. 3)
f. 7.3-9 (Rev. 3)
f. 7.3-10 (Rev. 3)
f. 7.3-11 (Rev. 11C)
f. 7.3-12 (Rev. 3)
f. 7.3-13 (Rev. 5)
f. 7.3-14 (Rev. 5)
f. 7.3-15 (Rev. 0)
f. 7.3-16 (Rev. 3)
p. 7.4-1 (Rev. 12C)
p. 7.4-2 (Rev. 3)
p. 7.4-3 (Rev. 17A)
p. 7.4-4 (Rev. 17A)
p. 7.4-5 (Rev. 11C)
p. 7.4-6 (Rev. 14D)
p. 7.4-6a (Rev. 17A)
p. 7.4-6b (Rev. 1)
p. 7.4-7 (Rev. 17A)
p. 7.4-8 (Rev. 3)
p. 7.4-9 (Rev. 18A)
p. 7.4-10 (Rev. 3)
p. 7.4-11 (Rev. 3)
p. 7.4-12 (Rev. 3)
p. 7.4-13 (Rev. 3)
p. 7.4-14 (Rev. 3)
p. 7.4-15 (Rev. 12C)
p. 7.4-15a (Rev. 3)
p. 7.4-15b (Rev. 3)
p. 7.4-16 (Rev. 13A)
p. 7.4-17 (Rev. 5)
p. 7.4-18 (Rev. 0)
p. 7.4-19 (Rev. 7)
p. 7.4-20 (Rev. 7)
p. 7.4-21 (Rev. 7)
p. 7.4-22 (Rev. 17A)
p. 7.4-23 (Rev. 7)
p. 7.4-24 (Rev. 11A)
p. 7.4-24a (Rev. 7)
p. 7.4-24b (Rev. 7)
p. 7.4-25 (Rev. 0)
p. 7.4-26 (Rev. 17A)
p. 7.4-27 (Rev. 2)
p. 7.4-28 (Rev. 2)
p. 7.4-29 (Rev. 3)
p. 7.4-29a (Rev. 3)
p. 7.4-29b (Rev. 11D)
p. 7.4-30 (Rev. 16)
p. 7.4-31 (Rev. 4)
p. 7.4-32 (Rev. 4)
p. 7.4-32a (Rev. 4)
p. 7.4-32b (Rev. 4)
p. 7.4-32c (Rev. 4)
p. 7.4-32d (Rev. 17A)
p. 7.4-33 (Rev. 14D)
t. 7.4-1 (Rev. 17A)
t. 7.4-2 (Rev. 15B)
f. 7.4-1 (sheet 1) (Rev. 5)
f. 7.4-1 (sheet 2) (Rev. 14D)
f. 7.4-1 (sheet 3) (Rev. 10B)
f. 7.4-1 (sheet 4) (Rev. 14D)
f. 7.4-1 (sheet 5) (Rev. 6)
f. 7.4-1 (sheet 6) (Rev. 10B)
f. 7.4-1 (sheet 7) (Rev. 14D)
f. 7.4-1 (sheet 8) (Rev. 14D)
f. 7.4-2 (Rev. 5)
f. 7.4-3 (Rev. 2)
f. 7.4-4 (Rev. 17A)
f. 7.4-5 (Rev. 17A)
p. 7.5-1 (Rev. 18A)
p. 7.5-2 (Rev. 17A)
p. 7.5-3 (Rev. 9A)
p. 7.5-4 (Rev. 3)
p. 7.5-5 (Rev. 18A)
p. 7.5-6 (Rev. 18A)
p. 7.5-7 (Rev. 12D)
p. 7.5-7a (Rev. 12D)
p. 7.5-7b (Rev. 5)
p. 7.5-8 (Rev. 0)
p. 7.5-9 (Rev. 18A)
p. 7.5-10 (Rev. 18A)
p. 7.5-11 (Rev. 18A)
p. 7.5-12 (Rev. 18A)
p. 7.5-13 (Rev. 18A)
p. 7.5-14 (Rev. 9C)
p. 7.5-15 (Rev. 9C)
p. 7.5-16 (Rev. 9C)
p. 7.5-17 (Rev. 9C)

p. 7.5-18 (Rev. 9C)
p. 7.5-19 (Rev. 9C)
p. 7.5-20 (Rev. 17A)
p. 7.5-21 (Rev. 17A)
p. 7.5-22 (Rev. 17A)
t. 7.5-1 (sheet 1) (Rev. 17A)
t. 7.5-1 (sheet 2) (Rev. 17A)
t. 7.5-1 (sheet 3) (Rev. 17A)
t. 7.5-1 (sheet 4) (Rev. 13C)
t. 7.5-1 (sheet 5) (Rev. 9C)
t. 7.5-1 (sheet 6) (Rev. 9C)
t. 7.5-1 (sheet 7) (Rev. 13C)
t. 7.5-1 (sheet 8) (Rev. 17A)
t. 7.5-1 (sheet 9) (Rev. 17A)
t. 7.5-1 (sheet 10) (Rev. 17A)
t. 7.5-1 (sheet 11) (Rev. 14A)
t. 7.5-1 (sheet 12) (Rev. 17A)
t. 7.5-1 (sheet 13) (Rev. 15A)
t. 7.5-1 (sheet 14) (Rev. 15A)
t. 7.5-1 (sheet 15) (Rev. 17A)
t. 7.5-1 (sheet 16) (Rev. 17A)
t. 7.5-1 (sheet 17) (Rev. 17A)
t. 7.5-1 (sheet 18) (Rev. 17A)
t. 7.5-1 (sheet 19) (Rev. 15B)
t. 7.5-1 (sheet 20) (Rev. 9C)
t. 7.5-1 (sheet 21) (Rev. 17A)
t. 7.5-1 (sheet 22) (Rev. 17A)
f. 7.5-1 (sheet 1) (Rev. 9A)
f. 7.5-1 (sheet 2) (Rev. 17B)
f. 7.5-1 (sheet 3) (Rev. 17B)
f. 7.5-1 (sheet 4) (Rev. 13C)
f. 7.5-1 (sheet 5) (Rev. 17A)
f. 7.5-1 (sheet 6) (Rev. 13C)
f. 7.5-1 (sheet 7) (Rev. 17A)
f. 7.5-1 (sheet 8) (Rev. 17A)
f. 7.5-1 (sheet 9) (Rev. 17A)
f. 7.5-1 (sheet 10) (Rev. 11D)
f. 7.5-1 (sheet 11) (Rev. 17A)
f. 7.5-1 (sheet 12) (Rev. 9A)
f. 7.5-1 (sheet 13) (Rev. 17A)
f. 7.5-1 (sheet 14) (Rev. 17A)
f. 7.5-1 (sheet 15) (Rev. 14D)
f. 7.5-1 (sheet 16) (Rev. 10B)
f. 7.5-1 (sheet 17) (Rev. 17A)
f. 7.5-1 (sheet 18) (Rev. 17B)
f. 7.5-1 (sheet 19) (Rev. 17A)
f. 7.5-1 (sheet 20) (Rev. 9A)
f. 7.5-1 (sheet 21) (Rev. 17A)
f. 7.5-2 (sheet 1) (Rev. 14D)
f. 7.5-2 (sheet 2) (Rev. 14D)
f. 7.5-2 (sheet 3) (Rev. 14D)
f. 7.5-2 (sheet 4) (Rev. 14D)
f. 7.5-2 (sheet 5) (Rev. 15A)
f. 7.5-2 (sheet 6) (Rev. 15A)
f. 7.5-2 (sheet 7) (Rev. 9A)
f. 7.5-2 (sheet 8) (Rev. 9A)
f. 7.5-2 (sheet 9) (Rev. 15A)
f. 7.5-3 (sheet 1) (Rev. 18A)
f. 7.5-3 (sheet 2) (Rev. 9A)
f. 7.5-3 (sheet 3) (Rev. 9A)
p. 7.6-1 (Rev. 0)
p. 7.6-2 (Rev. 17A)
p. 7.6-3 (Rev. 0)
p. 7.6-4 (Rev. 14B)
p. 7.6-5 (Rev. 16)
p. 7.6-6 (Rev. 17A)
p. 7.6-7 (Rev. 16)
p. 7.6-8 (Rev. 16)
p. 7.6-9 (Rev. 16)
p. 7.6-10 (Rev. 18A)
p. 7.6-11 (Rev. 18A)
p. 7.6-12 (Rev. 16)
p. 7.6-13 (Rev. 17A)
p. 7.6-14 (Rev. 16)
p. 7.6-15 (Rev. 16)
p. 7.6-16 (Rev. 16)
p. 7.6-17 (Rev. 16)
p. 7.6-18 (Rev. 16)
p. 7.6-19 (Rev. 17B)
p. 7.6-19a (Rev. 17B)
p. 7.6-19b (Rev. 17B)
p. 7.6-20 (Rev. 16)
p. 7.6-21 (Rev. 17A)
p. 7.6-22 (Rev. 16)
p. 7.6-23 (Rev. 17A)
p. 7.6-24 (Rev. 17A)
p. 7.6-25 (Rev. 16)
p. 7.6-26 (Rev. 16)
p. 7.6-27 (Rev. 16)
p. 7.6-28 (Rev. 16)
p. 7.6-29 (Rev. 16)
p. 7.6-30 (Rev. 16)
p. 7.6-31 (Rev. 16)
p. 7.6-32 (Rev. 16)
p. 7.6-33 (Rev. 17A)
p. 7.6-34 (Rev. 17A)
p. 7.6-35 (Rev. 16)
p. 7.6-36 (Rev. 16)
p. 7.6-37 (Rev. 16)
p. 7.6-38 (Rev. 16)
p. 7.6-39 (Rev. 16)
p. 7.6-40 (Rev. 18A)
p. 7.6-41 (Rev. 17A)
p. 7.6-42 (Rev. 17A)

p. 7.6-43 (Rev. 16)
p. 7.6-44 (Rev. 17A)
p. 7.6-45 (Rev. 16)
p. 7.6-46 (Rev. 16)
p. 7.6-47 (Rev. 16)
p. 7.6-48 (Rev. 16)
p. 7.6-49 (Rev. 16)
p. 7.6-50 (Rev. 18A)
p. 7.6-51 (Rev. 18A)
p. 7.6-52 (Rev. 16)
p. 7.6-53 (Rev. 16)
p. 7.6-54 (Rev. 18A)
p. 7.6-55 (Rev. 18A)
p. 7.6-56 (Rev. 16)
p. 7.6-57 (Rev. 16)
p. 7.6-58 (Rev. 16)
p. 7.6-59 (Rev. 16)
p. 7.6-60 (Rev. 16)
p. 7.6-61 (Rev. 16)
p. 7.6-62 (Rev. 16)
p. 7.6-63 (Rev. 16)
p. 7.6-64 (Rev. 16)
p. 7.6-65 (Rev. 17A)
p. 7.6-66 (Rev. 16)
p. 7.6-67 (Rev. 17A)
p. 7.6-68 (Rev. 17A)
p. 7.6-69 (Rev. 17A)
p. 7.6-70 (Rev. 17A)
p. 7.6-71 (Rev. 17A)
p. 7.6-72 (Rev. 17A)
p. 7.6-73 (Rev. 17A)
p. 7.6-74 (Rev. 17A)
p. 7.6-75 (Rev. 17A)
p. 7.6-76 (Rev. 17A)
p. 7.6-77 (Rev. 17A)
p. 7.6-78 (Rev. 17A)
p. 7.6-79 (Rev. 16)
p. 7.6-80 (Rev. 16)
p. 7.6-81 (Rev. 16)
p. 7.6-82 (Rev. 16)
p. 7.6-83 (Rev. 16)
p. 7.6-84 (Rev. 16)
p. 7.6-85 (Rev. 16)
p. 7.6-86 (Rev. 16)
p. 7.6-87 (Rev. 16)
p. 7.6-88 (Rev. 18A)
p. 7.6-89 (Rev. 16)
p. 7.6-90 (Rev. 16)
p. 7.6-91 (Rev. 16)
p. 7.6-92 (Rev. 16)
p. 7.6-93 (Rev. 16)
p. 7.6-94 (Rev. 17A)
p. 7.6-95 (Rev. 17A)
p. 7.6-96 (Rev. 17A)
p. 7.6-97 (Rev. 16)
p. 7.6-98 (Rev. 16)
p. 7.6-99 (Rev. 16)
p. 7.6-100 (Rev. 17A)
p. 7.6-101 (Rev. 17A)
p. 7.6-102 (Rev. 16)
t. 7.6-1 (sheet 1) (Rev. 17A)
t. 7.6-1 (sheet 2) (Rev. 11C)
t. 7.6-2 (Rev. 17A)
t. 7.6-3 (Rev. 0)
t. 7.6-4 (Rev. 0)
t. 7.6-5 (Rev. 16)
t. 7.6-6 (Rev. 16)
t. 7.6-7 (Rev. 17B)
t. 7.6-8 (Rev. 17A)
t. 7.6-9 (sheet 1) (Rev. 17A)
t. 7.6-9 (sheet 2) (Rev. 17A)
t. 7.6-10 (Rev. 7)
t. 7.6-11 (Rev. 15B)
t. 7.6-12 (Rev. 17A)
t. 7.6-13 (Rev. 17A)
f. 7.6-1 (Rev. 0)
f. 7.6-2 (Rev. 7)
f. 7.6-3 (Rev. 0)
f. 7.6-4 (Rev. 0)
f. 7.6-5 (sheet 1) (Rev. 17A)
f. 7.6-5 (sheet 2) (Rev. 16)
f. 7.6-5 (sheet 3) (Rev. 17A)
f. 7.6-5 (sheet 4) (Rev. 17A)
f. 7.6-5 (sheet 5) (Rev. 16)
f. 7.6-5 (sheet 6) (Rev. 17A)
f. 7.6-5 (sheet 7) (Rev. 17A)
f. 7.6-5 (sheet 8) (Rev. 17A)
f. 7.6-6 (Rev. 0)
f. 7.6-7 (Rev. 0)
f. 7.6-8 (Rev. 3)
f. 7.6-9 (Rev. 0)
f. 7.6-10 (Rev. 17A)
f. 7.6-11 (sheet 1) (Rev. 17A)
f. 7.6-11 (sheet 2) (Rev. 17A)
f. 7.6-11 (sheet 3) (Rev. 17A)
f. 7.6-11 (sheet 4) (Rev. 17A)
f. 7.6-11 (sheet 5) (Rev. 17A)
f. 7.6-14 (sheet 1) (Rev. 17A)
f. 7.6-14 (sheet 2) (Rev. 17A)
f. 7.6-15 (Rev. 10A)
f. 7.6-16 (Rev. 1)
f. 7.6-17 (Rev. 0)
f. 7.6-18 (Rev. 0)
f. 7.6-19 (Rev. 0)

f. 7.6-20 (Rev. 0)
f. 7.6-21 (sheet 1) (Rev. 7)
f. 7.6-21 (sheet 2) (Rev. 5)
f. 7.6-22 (Rev. 0)
f. 7.6-23 (Rev. 17B)
f. 7.6-24 (Rev. 17A)
f. 7.6-25 (Rev. 3)
p. 7.7-1 (Rev. 0)
p. 7.7-2 (Rev. 17A)
p. 7.7-3 (Rev. 0)
p. 7.7-4 (Rev. 0)
p. 7.7-5 (Rev. 0)
p. 7.7-6 (Rev. 16)
p. 7.7-7 (Rev. 17A)
p. 7.7-8 (Rev. 17A)
p. 7.7-9 (Rev. 0)
p. 7.7-10 (Rev. 16)
p. 7.7-11 (Rev. 16)
p. 7.7-12 (Rev. 16)
p. 7.7-13 (Rev. 0)
p. 7.7-14 (Rev. 18A)
p. 7.7-15 (Rev. 18A)
p. 7.7-16 (Rev. 12B)
p. 7.7-17 (Rev. 17A)
p. 7.7-18 (Rev. 17B)
p. 7.7-19 (Rev. 18A)
p. 7.7-20 (Rev. 16)
p. 7.7-21 (Rev. 16)
p. 7.7-22 (Rev. 16)
p. 7.7-22a (Rev. 17A)
p. 7.7-22b (Rev. 16)
p. 7.7-23 (Rev. 17B)
p. 7.7-24 (Rev. 0)
p. 7.7-25 (Rev. 15A)
p. 7.7-26 (Rev. 12B)
p. 7.7-27 (Rev. 16)
p. 7.7-28 (Rev. 12B)
p. 7.7-29 (Rev. 18A)
p. 7.7-30 (Rev. 17B)
p. 7.7-31 (Rev. 14D)
p. 7.7-32 (Rev. 14D)
p. 7.7-33 (Rev. 14D)
t. 7.7-1 (sheet 1) (Rev. 0)
t. 7.7-1 (sheet 2) (Rev. 17A)
f. 7.7-1 (sheet 1) (Rev. 6)
f. 7.7-1 (sheet 2) (Rev. 16)
f. 7.7-1 (sheet 3) (Rev. 14D)
f. 7.7-1 (sheet 4) (Rev. 14D)
f. 7.7-1 (sheet 5) (Rev. 14D)
f. 7.7-1 (sheet 6) (Rev. 17A)
f. 7.7-1 (sheet 8) (Rev. 16)
f. 7.7-1 (sheet 9) (Rev. 6)
f. 7.7-2 (Rev. 17A)
f. 7.7-3 (sheet 1) (Rev. 14C)
f. 7.7-3 (sheet 2) (Rev. 6)
f. 7.7-3 (sheet 3) (Rev. 6)
f. 7.7-3 (sheet 4) (Rev. 17B)
f. 7.7-3 (sheet 5) (Rev. 6)
f. 7.7-4 (Rev. 12C)
f. 7.7-5 (Rev. 17B)
f. 7.7-6 (Rev. 0)
p. 7.8-1 (Rev. 18A)
p. 7.8-2 (Rev. 17A)
p. 7.8-3 (Rev. 3)
p. 7.8-4 (Rev. 18A)
p. 7.8-5 (Rev. 18A)
p. 7.8-6 (Rev. 17A)
p. 7.8-7 (Rev. 17A)
p. 7.8-8 (Rev. 3)
t. 7.8-1 (sheet 1) (Rev. 17A)
t. 7.8-1 (sheet 2) (Rev. 17A)
t. 7.8-1 (sheet 3) (Rev. 17A)
t. 7.8-1 (sheet 4) (Rev. 17A)
t. 7.8-1 (sheet 5) (Rev. 17A)
t. 7.8-1 (sheet 6) (Rev. 17A)
f. 7.8-1 (Rev. 17A)
p. 7.9-1 (Rev. 18A)
p. 7.9-2 (Rev. 18A)
p. 7.9-3 (Rev. 12D)
p. 7.9-4 (Rev. 12D)
p. 7.9-5 (Rev. 13C)
p. 7.9-6 (Rev. 12D)
f. 7.9-1 (Rev. 13D)
p. 7.10-1 (Rev. 10B)
p. 7.10-2 (Rev. 18A)
p. 7.10-3 (Rev. 16)
p. 7.10-4 (Rev. 11D)
p. 7.10-5 (Rev. 15A)
p. i (chapter 8) (Rev. 14B)
p. ii (chapter 8) (Rev. 14B)
p. iii (chapter 8) (Rev. 14D)
p. iv (chapter 8) (Rev. 14B)
p. v (chapter 8) (Rev. 14B)
p. vi (chapter 8) (Rev. 14B)
p. 8.1-1 (Rev. 9B)
p. 8.1-2 (Rev. 0)
p. 8.1-3 (Rev. 11A)
p. 8.1-4 (Rev. 11A)
p. 8.1-5 (Rev. 11A)
p. 8.1-6 (Rev. 0)
p. 8.2-1 (Rev. 16)
p. 8.2-2 (Rev. 14A)
p. 8.2-3 (Rev. 14A)
p. 8.2-4 (Rev. 14A)

f. 8.2-1 (Rev. 17A)
f. 8.2-2 (Rev. 11D)
f. 8.2-3 (Rev. 17A)
f. 8.2-4 (Rev. 17A)
f. 8.2-5 (Rev. 2)
f. 8.2-6 (Rev. 0)
f. 8.2-7 (Rev. 2)
p. 8.3-1 (Rev. 0)
p. 8.3-2 (Rev. 14D)
p. 8.3-3 (Rev. 18A)
p. 8.3-4 (Rev. 14D)
p. 8.3-5 (Rev. 17B)
p. 8.3-5a (Rev. 18A)
p. 8.3-5b (Rev. 13A)
p. 8.3-6 (Rev. 13A)
p. 8.3-7 (Rev. 13D)
p. 8.3-8 (Rev. 11B)
p. 8.3-9 (Rev. 14D)
p. 8.3-10 (Rev. 11B)
p. 8.3-11 (Rev. 11D)
p. 8.3-12 (Rev. 8)
p. 8.3-13 (Rev. 11B)
p. 8.3-14 (Rev. 15A)
p. 8.3-14a (Rev. 15A)
p. 8.3-14b (Rev. 15A)
p. 8.3-15 (Rev. 16)
p. 8.3-16 (Rev. 15B)
p. 8.3-17 (Rev. 5)
p. 8.3-18 (Rev. 14B)
p. 8.3-19 (Rev. 10B)
p. 8.3-20 (Rev. 10B)
p. 8.3-21 (Rev. 0)
p. 8.3-22 (Rev. 14D)
p. 8.3-23 (Rev. 0)
p. 8.3-24 (Rev. 0)
p. 8.3-25 (Rev. 0)
p. 8.3-26 (Rev. 0)
p. 8.3-27 (Rev. 0)
p. 8.3-28 (Rev. 4)
p. 8.3-29 (Rev. 12B)
p. 8.3-30 (Rev. 12B)
p. 8.3-30a (Rev. 12B)
p. 8.3-30b (Rev. 12B)
p. 8.3-31 (Rev. 4)
p. 8.3-32 (Rev. 4)
p. 8.3-33 (Rev. 16)
p. 8.3-33a (Rev. 16)
p. 8.3-33b (Rev. 4)
p. 8.3-34 (Rev. 4)
p. 8.3-35 (Rev. 4)
p. 8.3-36 (Rev. 4)
p. 8.3-36a (Rev. 16)
p. 8.3-36b (Rev. 16)
p. 8.3-37 (Rev. 4)
p. 8.3-38 (Rev. 0)
p. 8.3-39 (Rev. 4)
p. 8.3-40 (Rev. 16)
p. 8.3-41 (Rev. 16)
p. 8.3-42 (Rev. 16)
p. 8.3-43 (Rev. 4)
p. 8.3-44 (Rev. 4)
p. 8.3-45 (Rev. 4)
p. 8.3-46 (Rev. 12D)
p. 8.3-47 (Rev. 13B)
p. 8.3-48 (Rev. 15B)
p. 8.3-48a (Rev. 11D)
p. 8.3-48b (Rev. 3)
p. 8.3-49 (Rev. 16)
p. 8.3-50 (Rev. 16)
p. 8.3-51 (Rev. 0)
p. 8.3-52 (Rev. 0)
p. 8.3-53 (Rev. 0)
p. 8.3-54 (Rev. 11C)
p. 8.3-55 (Rev. 17A)
p. 8.3-56 (Rev. 14D)
p. 8.3-57 (Rev. 11C)
p. 8.3-58 (Rev. 6)
t. 8.3-1 (sheet 1) (Rev. 16)
t. 8.3-1 (sheet 2) (Rev. 16)
t. 8.3-2 (Rev. 0)
t. 8.3-3 (sheet 1) (Rev. 15B)
t. 8.3-3 (sheet 2) (Rev. 15B)
t. 8.3-4 (Rev. 17B)
t. 8.3-5 (Rev. 16)
t. 8.3-6 (Rev. 17B)
t. 8.3-7 (Rev. 0)
t. 8.3-8 (Rev. 8)
t. 8.3-9 (Rev. 0)
t. 8.3-10 (Rev. 10C)
t. 8.3-11 (Rev. 17B)
t. 8.3-12 (Rev. 14B)
t. 8.3-13 (Rev. 17B)
t. 8.3-14 (Rev. 17B)
t. 8.3-15 (Rev. 14B)
t. 8.3-16 (Rev. 17B)
t. 8.3-17 (Rev. 0)
t. 8.3-18 (Rev. 17B)
t. 8.3-19 (Rev. 14B)
t. 8.3-20 (Rev. 14B)
f. 8.3-1 (Rev. 18B)
f. 8.3-2 (Rev. 7)
f. 8.3-3 (Rev. 6)
f. 8.3-4 (Rev. 17B)
f. 8.3-5 (Rev. 11C)

f. 8.3-6 (Rev. 11C)
f. 8.3-7 (Rev. 6)
f. 8.3-8 (Rev. 17B)
f. 8.3-9 (Rev. 13A)
f. 8.3-10 (sheet 1) (Rev. 4)
f. 8.3-10 (sheet 2) (Rev. 4)
f. 8.3-10 (sheet 3) (Rev. 4)
f. 8.3-10 (sheet 4) (Rev. 4)
f. 8.3-10 (sheet 5) (Rev. 4)
f. 8.3-10 (sheet 6) (Rev. 4)
f. 8.3-10 (sheet 7) (Rev. 4)
f. 8.3-10 (sheet 8) (Rev. 13A)
f. 8.3-10 (sheet 9) (Rev. 12D)
f. 8.3-10 (sheet 10) (Rev. 12D)
f. 8.3-11 (sheet 1) (Rev. 13A)
f. 8.3-11 (sheet 2) (Rev. 13A)
f. 8.3-11 (sheet 3) (Rev. 7)
f. 8.3-11 (sheet 4) (Rev. 18B)
f. 8.3-11 (sheet 5) (Rev. 16)
f. 8.3-11 (sheet 6) (Rev. 13D)
f. 8.3-11 (sheet 7) (Rev. 4)
f. 8.3-11 (sheet 8) (Rev. 4)
p. 8.4-1 (Rev. 17B)
p. 8.4-2 (Rev. 17B)
p. 8.4-3 (Rev. 17B)
p. 8.4-4 (Rev. 12C)
p. 8.4-5 (Rev. 12C)
p. 8.4-6 (Rev. 17B)
p. 8.4-7 (Rev. 12C)
p. 8.4-8 (Rev. 12C)
p. 8.4-9 (Rev. 17B)
p. 8.4-10 (Rev. 17B)
t. 8.4-1 (Rev. 12C)
t. 8.4-2 (Rev. 16)
p. i (chapter 9) (Rev. 18A)
p. ii (chapter 9) (Rev. 15B)
p. iii (chapter 9) (Rev. 15B)
p. iv (chapter 9) (Rev. 15B)
p. v (chapter 9) (Rev. 15B)
p. vi (chapter 9) (Rev. 15B)
p. vii (chapter 9) (Rev. 15B)
p. viii (chapter 9) (Rev. 18A)
p. ix (chapter 9) (Rev. 13A)
p. x (chapter 9) (Rev. 18A)
p. xi (chapter 9) (Rev. 18A)
p. 9.1-1 (Rev. 15B)
p. 9.1-2 (Rev. 17A)
p. 9.1-3 (Rev. 15B)
p. 9.1-4 (Rev. 18A)
p. 9.1-5 (Rev. 18A)
p. 9.1-5a (Rev. 15B)
p. 9.1-5b (Rev. 15B)
p. 9.1-6 (Rev. 15B)
p. 9.1-7 (Rev. 17A)
p. 9.1-8 (Rev. 17A)
p. 9.1-9 (Rev. 14C)
p. 9.1-10 (Rev. 18A)
p. 9.1-11 (Rev. 18A)
p. 9.1-12 (Rev. 14C)
p. 9.1-13 (Rev. 10C)
p. 9.1-14 (Rev. 14C)
p. 9.1-15 (Rev. 18A)
p. 9.1-16 (Rev. 17A)
p. 9.1-16a (Rev. 16)
p. 9.1-16b (Rev. 17A)
p. 9.1-17 (Rev. 17B)
p. 9.1-18 (Rev. 17B)
p. 9.1-19 (Rev. 17A)
p. 9.1-20 (Rev. 12D)
p. 9.1-21 (Rev. 17B)
p. 9.1-22 (Rev. 17B)
p. 9.1-23 (Rev. 18A)
p. 9.1-24 (Rev. 18A)
p. 9.1-25 (Rev. 18A)
p. 9.1-26 (Rev. 18A)
p. 9.1-27 (Rev. 18A)
p. 9.1-28 (Rev. 18A)
p. 9.1-29 (Rev. 18A)
p. 9.1-30 (Rev. 18A)
p. 9.1-31 (Rev. 18A)
p. 9.1-32 (Rev. 18A)
p. 9.1-33 (Rev. 18A)
p. 9.1-34 (Rev. 18A)
t. 9.1-1 (Rev. 15B)
t. 9.1-2 (Rev. 1)
t. 9.1-3 (sheet 1) (Rev. 14C)
t. 9.1-3 (sheet 2) (Rev. 14C)
t. 9.1-5 (sheet 1) (Rev. 0)
t. 9.1-5 (sheet 2) (Rev. 0)
f. 9.1-1 (Rev. 0)
f. 9.1-2 (Rev. 0)
f. 9.1-3 (Rev. 10C)
f. 9.1-4 (sheet 1) (Rev. 7)
f. 9.1-4 (sheet 2) (Rev. 0)
f. 9.1-4 (sheet 3) (Rev. 0)
f. 9.1-6 (Rev. 18A)
f. 9.1-7 (Rev. 18A)
f. 9.1-8 (Rev. 18A)
f. 9.1-10 (Rev. 0)
p. 9.2-1 (Rev. 0)
p. 9.2-2 (Rev. 17A)
p. 9.2-3 (Rev. 14D)
p. 9.2-3a (Rev. 17A)
p. 9.2-3b (Rev. 7)

p. 9.2-4 (Rev. 0)
p. 9.2-5 (Rev. 17A)
p. 9.2-6 (Rev. 14C)
p. 9.2-7 (Rev. 17A)
p. 9.2-8 (Rev. 15B)
p. 9.2-9 (Rev. 17A)
p. 9.2-9a (Rev. 8)
p. 9.2-9b (Rev. 8)
p. 9.2-10 (Rev. 17A)
p. 9.2-11 (Rev. 17A)
p. 9.2-12 (Rev. 0)
p. 9.2-13 (Rev. 0)
p. 9.2-14 (Rev. 12B)
p. 9.2-15 (Rev. 0)
p. 9.2-16 (Rev. 11D)
p. 9.2-17 (Rev. 0)
p. 9.2-18 (Rev. 11C)
p. 9.2-19 (Rev. 14D)
p. 9.2-20 (Rev. 17B)
p. 9.2-21 (Rev. 15B)
p. 9.2-22 (Rev. 1)
p. 9.2-23 (Rev. 14C)
p. 9.2-24 (Rev. 15B)
p. 9.2-25 (Rev. 15B)
p. 9.2-26 (Rev. 17A)
p. 9.2-27 (Rev. 11D)
p. 9.2-28 (Rev. 11D)
t. 9.2-1 (Rev. 11C)
t. 9.2-2 (sheet 1) (Rev. 17B)
t. 9.2-2 (sheet 2) (Rev. 17A)
t. 9.2-3 (sheet 1) (Rev. 14C)
t. 9.2-3 (sheet 2) (Rev. 17A)
t. 9.2-3 (sheet 3) (Rev. 14C)
t. 9.2-3 (sheet 4) (Rev. 14C)
t. 9.2-3 (sheet 5) (Rev. 14C)
t. 9.2-4 (sheet 1) (Rev. 0)
t. 9.2-4 (sheet 2) (Rev. 8)
t. 9.2-5 (Rev. 0)
t. 9.2-6 (Rev. 5)
t. 9.2-7 (Rev. 0)
t. 9.2-8 (Rev. 0)
t. 9.2-9 (Rev. 0)
t. 9.2-10 (Rev. 0)
t. 9.2-11 (Rev. 0)
t. 9.2-12 (Rev. 0)
t. 9.2-13 (Rev. 0)
t. 9.2-14 (Rev. 0)
t. 9.2-15 (Rev. 0)
t. 9.2-16 (Rev. 0)
t. 9.2-17 (Rev. 0)
t. 9.2-18 (Rev. 4)
f. 9.2-1 (Rev. 12B)
f. 9.2-2 (Rev. 17B)
f. 9.2-3 (Rev. 18A)
f. 9.2-4 (Rev. 1)
f. 9.2-5 (Rev. 11C)
f. 9.2-6 (sheet 1) (Rev. 18A)
f. 9.2-6 (sheet 2) (Rev. 18A)
f. 9.2-6 (sheet 3) (Rev. 17B)
f. 9.2-7 (sheet 1) (Rev. 11C)
f. 9.2-7 (sheet 2) (Rev. 17B)
f. 9.2-8 (Rev. 0)
f. 9.2-9 (Rev. 1)
f. 9.2-10 (Rev. 0)
f. 9.2-11 (Rev. 0)
f. 9.2-12 (Rev. 0)
f. 9.2-13 (Rev. 0)
f. 9.2-14 (Rev. 0)
f. 9.2-15 (Rev. 0)
f. 9.2-16 (Rev. 0)
f. 9.2-17 (Rev. 5)
f. 9.2-18 (Rev. 5)
f. 9.2-19 (Rev. 0)
f. 9.2-20 (Rev. 18A)
f. 9.2-21 (Rev. 18A)
f. 9.2-22 (Rev. 0)
f. 9.2-23 (sheet 1) (Rev. 17B)
f. 9.2-23 (sheet 2) (Rev. 17B)
p. 9.3-1 (Rev. 16)
p. 9.3-2 (Rev. 17A)
p. 9.3-3 (Rev. 16)
p. 9.3-4 (Rev. 16)
p. 9.3-5 (Rev. 16)
p. 9.3-6 (Rev. 16)
p. 9.3-7 (Rev. 16)
p. 9.3-8 (Rev. 16)
p. 9.3-9 (Rev. 16)
p. 9.3-10 (Rev. 16)
p. 9.3-11 (Rev. 17A)
p. 9.3-12 (Rev. 16)
p. 9.3-12a (Rev. 16)
p. 9.3-12b (Rev. 16)
p. 9.3-13 (Rev. 16)
p. 9.3-14 (Rev. 16)
p. 9.3-15 (Rev. 10A)
p. 9.3-16 (Rev. 10A)
p. 9.3-17 (Rev. 10B)
p. 9.3-18 (Rev. 14A)
p. 9.3-19 (Rev. 16)
p. 9.3-20 (Rev. 17A)
p. 9.3-21 (Rev. 17A)
p. 9.3-22 (Rev. 17A)
p. 9.3-23 (Rev. 17A)
p. 9.3-24 (Rev. 17A)

p. 9.3-25 (Rev. 17A)
p. 9.3-26 (Rev. 18A)
t. 9.3-1 (Rev. 5)
t. 9.3-2 (sheet 1) (Rev. 10C)
t. 9.3-2 (sheet 2) (Rev. 10C)
t. 9.3-2 (sheet 3) (Rev. 10C)
f. 9.3-1 (sheet 1) (Rev. 17A)
f. 9.3-1 (sheet 2) (Rev. 11B)
f. 9.3-1 (sheet 4) (Rev. 17B)
f. 9.3-1 (sheet 5) (Rev. 18A)
f. 9.3-1 (sheet 6) (Rev. 4)
f. 9.3-1 (sheet 7) (Rev. 4)
f. 9.3-2 (Rev. 10A)
f. 9.3-3 (Rev. 9B)
f. 9.3-4 (sheet 1) (Rev. 17A)
f. 9.3-4 (sheet 2) (Rev. 0)
f. 9.3-5 (Rev. 13D)
f. 9.3-6 (Rev. 13B)
f. 9.3-7 (sheet 1) (Rev. 18A)
f. 9.3-7 (sheet 2) (Rev. 18A)
f. 9.3-8 (Rev. 18A)
f. 9.3-9 (Rev. 10A)
p. 9.4-1 (Rev. 10C)
p. 9.4-2 (Rev. 14D)
p. 9.4-3 (Rev. 18A)
p. 9.4-3a (Rev. 17A)
p. 9.4-3b (Rev. 10C)
p. 9.4-4 (Rev. 5)
p. 9.4-5 (Rev. 12A)
p. 9.4-6 (Rev. 12A)
p. 9.4-7 (Rev. 18A)
p. 9.4-8 (Rev. 17B)
p. 9.4-9 (Rev. 12A)
p. 9.4-10 (Rev. 17A)
p. 9.4-11 (Rev. 17A)
p. 9.4-12 (Rev. 18A)
p. 9.4-13 (Rev. 5)
p. 9.4-14 (Rev. 5)
p. 9.4-15 (Rev. 12C)
p. 9.4-16 (Rev. 12C)
p. 9.4-17 (Rev. 17A)
p. 9.4-18 (Rev. 12A)
p. 9.4-19 (Rev. 17A)
p. 9.4-19a (Rev. 17A)
p. 9.4-19b (Rev. 17A)
p. 9.4-20 (Rev. 12A)
p. 9.4-21 (Rev. 12A)
p. 9.4-22 (Rev. 8)
p. 9.4-23 (Rev. 17A)
p. 9.4-24 (Rev. 17A)
p. 9.4-25 (Rev. 8)
p. 9.4-26 (Rev. 17A)
p. 9.4-26a (Rev. 8)
p. 9.4-26b (Rev. 8)
p. 9.4-27 (Rev. 17A)
p. 9.4-28 (Rev. 17B)
p. 9.4-28a (Rev. 17B)
p. 9.4-28b (Rev. 7)
p. 9.4-29 (Rev. 9B)
p. 9.4-30 (Rev. 13C)
p. 9.4-31 (Rev. 17A)
p. 9.4-32 (Rev. 17A)
p. 9.4-33 (Rev. 8)
p. 9.4-34 (Rev. 17A)
p. 9.4-35 (Rev. 8)
p. 9.4-36 (Rev. 12A)
p. 9.4-36a (Rev. 12A)
p. 9.4-36b (Rev. 12A)
p. 9.4-37 (Rev. 17B)
p. 9.4-38 (Rev. 17A)
p. 9.4-38a (Rev. 17A)
p. 9.4-38b (Rev. 17A)
p. 9.4-39 (Rev. 10A)
p. 9.4-40 (Rev. 17A)
p. 9.4-41 (Rev. 10A)
p. 9.4-42 (Rev. 17A)
p. 9.4-43 (Rev. 10A)
p. 9.4-44 (Rev. 11A)
p. 9.4-45 (Rev. 10A)
p. 9.4-46 (Rev. 14A)
p. 9.4-47 (Rev. 17A)
t. 9.4-1 (Rev. 14D)
t. 9.4-2 (sheet 1) (Rev. 1)
t. 9.4-2 (sheet 2) (Rev. 1)
t. 9.4-3 (sheet 1) (Rev. 5)
t. 9.4-3 (sheet 2) (Rev. 5)
t. 9.4-3 (sheet 3) (Rev. 5)
t. 9.4-3 (sheet 4) (Rev. 7)
t. 9.4-4 (sheet 1) (Rev. 12A)
t. 9.4-4 (sheet 2) (Rev. 12A)
t. 9.4-4 (sheet 3) (Rev. 14D)
t. 9.4-4 (sheet 4) (Rev. 12A)
t. 9.4-4 (sheet 5) (Rev. 11D)
t. 9.4-4 (sheet 6) (Rev. 9A)
t. 9.4-4 (sheet 7) (Rev. 5)
t. 9.4-5 (Rev. 5)
t. 9.4-6 (sheet 1) (Rev. 12A)
t. 9.4-6 (sheet 2) (Rev. 8)
t. 9.4-7 (sheet 1) (Rev. 5)
t. 9.4-7 (sheet 2) (Rev. 16)
t. 9.4-7 (sheet 3) (Rev. 1)
t. 9.4-8 (sheet 1) (Rev. 12A)
t. 9.4-8 (sheet 2) (Rev. 12A)
t. 9.4-9 (Rev. 7)

t. 9.4-10 (sheet 1) (Rev. 8)
t. 9.4-10 (sheet 1a) (Rev. 8)
t. 9.4-10 (sheet 2) (Rev. 1)
t. 9.4-10 (sheet 3) (Rev. 1)
t. 9.4-11 (Rev. 7)
t. 9.4-12 (sheet 1) (Rev. 17B)
t. 9.4-12 (sheet 2) (Rev. 7)
t. 9.4-12 (sheet 3) (Rev. 7)
t. 9.4-13 (sheet 1) (Rev. 17A)
t. 9.4-13 (sheet 2) (Rev. 5)
t. 9.4-13 (sheet 3) (Rev. 17A)
t. 9.4-14 (sheet 1) (Rev. 10A)
t. 9.4-14 (sheet 2) (Rev. 10A)
t. 9.4-14 (sheet 3) (Rev. 10A)
t. 9.4-14 (sheet 4) (Rev. 10A)
t. 9.4-14 (sheet 5) (Rev. 10A)
t. 9.4-14 (sheet 6) (Rev. 17A)
t. 9.4-15 (sheet 1) (Rev. 10A)
t. 9.4-15 (sheet 2) (Rev. 10A)
t. 9.4-15 (sheet 3) (Rev. 10A)
t. 9.4-15 (sheet 4) (Rev. 10A)
t. 9.4-15 (sheet 5) (Rev. 10A)
t. 9.4-15 (sheet 6) (Rev. 10A)
t. 9.4-15 (sheet 7) (Rev. 10A)
t. 9.4-15 (sheet 8) (Rev. 10A)
t. 9.4-15 (sheet 9) (Rev. 10A)
t. 9.4-15 (sheet 10) (Rev. 17A)
t. 9.4-15 (sheet 11) (Rev. 17A)
t. 9.4-16 (Rev. 1)
t. 9.4-17 (sheet 1) (Rev. 1)
t. 9.4-17 (sheet 2) (Rev. 1)
t. 9.4-17 (sheet 3) (Rev. 1)
t. 9.4-18 (sheet 1) (Rev. 11A)
t. 9.4-18 (sheet 2) (Rev. 11A)
t. 9.4-19 (sheet 1) (Rev. 11A)
t. 9.4-19 (sheet 2) (Rev. 8)
t. 9.4-20 (Rev. 12A)
f. 9.4-1 (sheet 1) (Rev. 18A)
f. 9.4-1 (sheet 2) (Rev. 13A)
f. 9.4-2 (Rev. 18A)
f. 9.4-3 (Rev. 18A)
f. 9.4-4 (Rev. 18A)
f. 9.4-5 (Rev. 7)
f. 9.4-6 (Rev. 11C)
f. 9.4-7 (Rev. 14B)
f. 9.4-8 (Rev. 0)
f. 9.4-9 (Rev. 18A)
f. 9.4-10 (sheet 1) (Rev. 10B)
f. 9.4-10 (sheet 2) (Rev. 18A)
f. 9.4-11 (sheet 1) (Rev. 13C)
f. 9.4-11 (sheet 2) (Rev. 4)
f. 9.4-12 (Rev. 17B)
f. 9.4-13 (Rev. 17B)
f. 9.4-15 (Rev. 14A)
f. 9.4-16 (sheet 1) (Rev. 17A)
f. 9.4-16 (sheet 2) (Rev. 10A)
f. 9.4-16 (sheet 3) (Rev. 18A)
f. 9.4-17 (sheet 1) (Rev. 18A)
f. 9.4-17 (sheet 2) (Rev. 18A)
f. 9.4-18 (Rev. 18A)
f. 9.4-19 (Rev. 17B)
f. 9.4-20 (Rev. 10A)
f. 9.4-21 (Rev. 10A)
f. 9.4-22 (Rev. 12A)
p. 9.5-1 (Rev. 5)
p. 9.5-2 (Rev. 0)
p. 9.5-3 (Rev. 11D)
p. 9.5-4 (Rev. 17A)
p. 9.5-4a (Rev. 1)
p. 9.5-4b (Rev. 1)
p. 9.5-5 (Rev. 4)
p. 9.5-6 (Rev. 0)
p. 9.5-7 (Rev. 14D)
p. 9.5-8 (Rev. 17A)
p. 9.5-9 (Rev. 14D)
p. 9.5-10 (Rev. 14D)
p. 9.5-11 (Rev. 0)
p. 9.5-12 (Rev. 0)
p. 9.5-13 (Rev. 9B)
p. 9.5-14 (Rev. 15A)
p. 9.5-15 (Rev. 17A)
p. 9.5-16 (Rev. 4)
p. 9.5-17 (Rev. 0)
p. 9.5-18 (Rev. 0)
p. 9.5-19 (Rev. 18A)
p. 9.5-19a (Rev. 18A)
p. 9.5-19b (Rev. 3)
p. 9.5-20 (Rev. 0)
p. 9.5-21 (Rev. 0)
p. 9.5-22 (Rev. 12A)
p. 9.5-23 (Rev. 12A)
p. 9.5-24 (Rev. 17A)
p. 9.5-25 (Rev. 13A)
p. 9.5-26 (Rev. 13A)
t. 9.5-1 (Rev. 0)
t. 9.5-2 (Rev. 0)
t. 9.5-3 (Rev. 0)
t. 9.5-4 (sheet 1) (Rev. 13A)
t. 9.5-4 (sheet 2) (Rev. 9C)
t. 9.5-5 (Rev 13A)
f. 9.5-1 (Rev. 18A)
f. 9.5-2 (Rev. 17B)
f. 9.5-3 (sheet 1) (Rev. 10B)
f. 9.5-3 (sheet 2) (Rev. 5)

p. i (chapter 10) (Rev. 18A)
p. ii (chapter 10) (Rev. 18A)
p. iii (chapter 10) (Rev. 18A)
p. iv (chapter 10) (Rev. 18A)
p. v (chapter 10) (Rev. 4)
p. 10.1-1 (Rev. 17B)
p. 10.1-2 (Rev. 0)
f. 10.1-1 (Rev. 14D)
f. 10.1-2 (Rev. 0)
f. 10.1-3 (Rev. 18A)
f. 10.1-4 (Rev. 11D)
f. 10.1-5 (Rev. 1)
f. 10.1-6 (Rev. 0)
p. 10.2-1 (Rev. 17B)
p. 10.2-2 (Rev. 17B)
p. 10.2-3 (Rev. 0)
p. 10.2-4 (Rev. 0)
p. 10.2-5 (Rev. 0)
p. 10.2-6 (Rev. 0)
p. 10.2-7 (Rev. 1)
p. 10.2-8 (Rev. 0)
p. 10.2-9 (Rev. 0)
p. 10.2-10 (Rev. 17B)
p. 10.2-11 (Rev. 0)
p. 10.2-12 (Rev. 18A)
p. 10.2-13 (Rev. 13B)
p. 10.2-14 (Rev. 17B)
t. 10.2-1 (Rev. 17B)
t. 10.2-2 (Rev. 0)
t. 10.2-3 (Rev. 0)
f. 10.2-1 (Rev. 0)
f. 10.2-2 (Rev. 0)
f. 10.2-3 (Rev. 0)
p. 10.2A-1 (Rev. 0)
p. 10.2A-2 (Rev. 0)
p. 10.2A-3 (Rev. 0)
p. 10.2A-4 (Rev. 0)
p. 10.2A-5 (Rev. 0)
p. 10.2A-6 (Rev. 0)
p. 10.2A-7 (Rev. 1)
p. 10.2A-8 (Rev. 0)
p. 10.2A-9 (Rev. 0)
p. 10.2A-10 (Rev. 0)
p. 10.2A-11 (Rev. 0)
p. 10.2A-12 (Rev. 10A)
p. 10.2A-13 (Rev. 0)
p. 10.2A-14 (Rev. 0)
p. 10.2A-15 (Rev. 0)
p. 10.2A-16 (Rev. 0)
p. 10.2A-17 (Rev. 0)
p. 10.2A-18 (Rev. 0)
p. 10.2A-19 (Rev. 15A)
p. 10.2A-20 (Rev. 0)
f. 10.2A-1 (Rev. 0)
f. 10.2A-2 (Rev. 0)
f. 10.2A-3 (Rev. 0)
f. 10.2A-4 (Rev. 0)
f. 10.2A-5 (Rev. 0)
p. 10.3-1 (Rev. 0)
p. 10.3-2 (Rev. 17A)
p. 10.3-3 (Rev. 15B)
f. 10.3-1 (sheet 1) (Rev. 17B)
f. 10.3-1 (sheet 2) (Rev. 18A)
p. 10.4-1 (Rev. 17B)
p. 10.4-2 (Rev. 0)
p. 10.4-3 (Rev. 18A)
p. 10.4-4 (Rev. 16)
p. 10.4-5 (Rev. 18A)
p. 10.4-6 (Rev. 17A)
p. 10.4-7 (Rev. 17B)
p. 10.4-8 (Rev. 18A)
p. 10.4-9 (Rev. 18A)
p. 10.4-9a (Rev. 15A)
p. 10.4-9b (Rev. 15A)
p. 10.4-10 (Rev. 17A)
p. 10.4-11 (Rev. 0)
p. 10.4-12 (Rev. 17B)
p. 10.4-13 (Rev. 17B)
p. 10.4-14 (Rev. 17B)
p. 10.4-15 (Rev. 16)
p. 10.4-15a (Rev. 5)
p. 10.4-15b (Rev. 4)
p. 10.4-16 (Rev. 18A)
p. 10.4-17 (Rev. 17B)
p. 10.4-18 (Rev. 17B)
p. 10.4-19 (Rev. 18A)
p. 10.4-20 (Rev. 12C)
p. 10.4-21 (Rev. 14D)
p. 10.4-22 (Rev. 12C)
p. 10.4-23 (Rev. 12C)
p. 10.4-24 (Rev. 12C)
p. 10.4-25 (Rev. 12C)
t. 10.4-1 (Rev. 18A)
t. 10.4-2 (sheet 1) (Rev. 18A)
t. 10.4-2 (sheet 2) (Rev. 18A)
t. 10.4-2 (sheet 3) (Rev. 18A)
f. 10.4-1 (sheet 1) (Rev. 18A)
f. 10.4-1 (sheet 2) (Rev. 17B)
f. 10.4-2 (Rev. 18A)
f. 10.4-3 (sheet 1) (Rev. 17A)
f. 10.4-3 (sheet 2) (Rev. 17B)
f. 10.4-4 (sheet 1) (Rev. 17B)
f. 10.4-4 (sheet 2) (Rev. 17A)
f. 10.4-4 (sheet 3) (Rev. 17B)

f. 10.4-4 (sheet 4) (Rev. 17B)
f. 10.4-4 (sheet 5) (Rev. 17B)
f. 10.4-4 (sheet 6) (Rev. 14C)
f. 10.4-4 (sheet 7) (Rev. 17B)
f. 10.4-4 (sheet 8) (Rev. 11C)
f. 10.4-5 (Rev. 17B)
p. i (chapter 11) (Rev. 14B)
p. ii (chapter 11) (Rev. 14B)
p. iii (chapter 11) (Rev. 14C)
p. iv (chapter 11) (Rev. 14B)
p. v (chapter 11) (Rev. 15B)
p. vi (chapter 11) (Rev. 9A)
p. vii (chapter 11) (Rev. 17A)
p. 11.1-1 (Rev. 0)
p. 11.1-2 (Rev. 0)
p. 11.1-3 (Rev. 17A)
p. 11.1-4 (Rev. 1)
p. 11.1-5 (Rev. 0)
p. 11.1-6 (Rev. 0)
p. 11.1-7 (Rev. 12D)
p. 11.1-8 (Rev. 0)
p. 11.1-9 (Rev. 0)
p. 11.1-10 (Rev. 12D)
p. 11.1-11 (Rev. 17B)
p. 11.1-12 (Rev. 18A)
p. 11.1-13 (Rev. 17B)
p. 11.1-14 (Rev. 0)
p. 11.1-15 (Rev. 0)
p. 11.1-16 (Rev. 0)
t. 11.1-1 (Rev. 0)
t. 11.1-2 (Rev. 16)
t. 11.1-3 (sheet 1) (Rev. 16)
t. 11.1-3 (sheet 2) (Rev. 16)
t. 11.1-4 (Rev. 16)
t. 11.1-5 (Rev. 16)
t. 11.1-6 (Rev. 16)
t. 11.1-7 (Rev. 16)
t. 11.1-8 (Rev. 16)
t. 11.1-9 (Rev. 0)
f. 11.1-1 (Rev. 0)
f. 11.1-2 (Rev. 0)
f. 11.1-3 (Rev. 0)
p. 11.2-1 (Rev. 18A)
p. 11.2-2 (Rev. 16)
p. 11.2-3 (Rev. 14B)
p. 11.2-4 (Rev. 14B)
p. 11.2-5 (Rev. 16)
p. 11.2-6 (Rev. 14B)
p. 11.2-7 (Rev. 14B)
p. 11.2-8 (Rev. 14B)
p. 11.2-9 (Rev. 16)
p. 11.2-10 (Rev. 14B)
p. 11.2-11 (Rev. 14B)
p. 11.2-12 (Rev. 16)
p. 11.2-13 (Rev. 16)
p. 11.2-14 (Rev. 14B)
p. 11.2-15 (Rev. 18A)
p. 11.2-16 (Rev. 18A)
p. 11.2-17 (Rev. 17B)
p. 11.2-18 (Rev. 18A)
p. 11.2-19 (Rev. 17B)
p. 11.2-20 (Rev. 14B)
t. 11.2-1 (Rev. 14B)
t. 11.2-2 (sheet 1) (Rev. 12A)
t. 11.2-2 (sheet 2) (Rev. 12A)
t. 11.2-2 (sheet 3) (Rev. 12A)
t. 11.2-3 (Rev. 17B)
t. 11.2-4 (sheet 1) (Rev. 17B)
t. 11.2-4 (sheet 2) (Rev. 17B)
t. 11.2-4 (sheet 3) (Rev. 17B)
t. 11.2-5 (Rev. 17B)
f. 11.2-1 (sheet 1) (Rev. 18A)
f. 11.2-1 (sheet 2) (Rev. 18A)
f. 11.2-1 (sheet 3) (Rev. 18A)
f. 11.2-1 (sheet 4) (Rev. 17A)
f. 11.2-1 (sheet 5) (Rev. 17A)
f. 11.2-1 (sheet 6) (Rev. 18B)
f. 11.2-1 (sheet 7) (Rev. 14B)
f. 11.2-8 (Rev. 17A)
f. 11.2-9 (Rev. 13D)
f. 11.2-10 (Rev. 13D)
f. 11.2-11 (sheet 1) (Rev. 6)
f. 11.2-11 (sheet 2) (Rev. 11D)
f. 11.2-12 (Rev. 0)
f. 11.2-13 (Rev. 0)
p. 11.3-1 (Rev. 12D)
p. 11.3-2 (Rev. 0)
p. 11.3-3 (Rev. 0)
p. 11.3-4 (Rev. 0)
p. 11.3-5 (Rev. 0)
p. 11.3-6 (Rev. 1)
p. 11.3-7 (Rev. 4)
p. 11.3-8 (Rev. 0)
p. 11.3-9 (Rev. 12D)
p. 11.3-10 (Rev. 17A)
p. 11.3-11 (Rev. 0)
p. 11.3-12 (Rev. 0)
p. 11.3-13 (Rev. 17B)
p. 11.3-14 (Rev. 18A)
p. 11.3-15 (Rev. 18A)
p. 11.3-16 (Rev. 15B)
p. 11.3-17 (Rev. 15B)
t. 11.3-1 (Rev. 0)
t. 11.3-2 (sheet 1) (Rev. 4)

t. 11.3-2 (sheet 2) (Rev. 5)
t. 11.3-2 (sheet 3) (Rev. 4)
t. 11.3-2 (sheet 4) (Rev. 4)
t. 11.3-3 (sheet 1) (Rev. 0)
t. 11.3-3 (sheet 2) (Rev. 4)
t. 11.3-4 (sheet 1) (Rev. 12A)
t. 11.3-4 (sheet 2) (Rev. 12D)
t. 11.3-5 (sheet 1) (Rev. 0)
t. 11.3-5 (sheet 2) (Rev. 4)
t. 11.3-5 (sheet 3) (Rev. 0)
t. 11.3-6 (sheet 1) (Rev. 17B)
t. 11.3-6 (sheet 2) (Rev. 17B)
t. 11.3-6 (sheet 3) (Rev. 17B)
t. 11.3-7 (sheet 1) (Rev. 0)
t. 11.3-7 (sheet 2) (Rev. 0)
t. 11.3-8 (sheet 1) (Rev. 0)
t. 11.3-8 (sheet 2) (Rev. 0)
t. 11.3-9 (Rev. 17B)
f. 11.3-1 (Rev. 4)
f. 11.3-2 (Rev. 8)
f. 11.3-3 (Rev. 18A)
p. 11.4-1 (Rev. 4)
p. 11.4-2 (Rev. 18A)
p. 11.4-3 (Rev. 14D)
p. 11.4-4 (Rev. 18A)
p. 11.4-5 (Rev. 12D)
p. 11.4-6 (Rev. 14D)
p. 11.4-7 (Rev. 13B)
p. 11.4-8 (Rev. 14D)
p. 11.4-9 (Rev. 11D)
p. 11.4-10 (Rev. 11D)
p. 11.4-11 (Rev. 12D)
p. 11.4-12 (Rev. 6)
p. 11.4-13 (Rev. 12D)
p. 11.4-13a (Rev. 6)
p. 11.4-13b (Rev. 2)
p. 11.4-14 (Rev. 15B)
p. 11.4-15 (Rev. 0)
p. 11.4-16 (Rev. 12D)
p. 11.4-16a (Rev. 2)
p. 11.4-16b (Rev. 2)
p. 11.4-17 (Rev. 0)
p. 11.4-18 (Rev. 0)
p. 11.4-19 (Rev. 7)
p. 11.4-20 (Rev. 8)
p. 11.4-20a (Rev. 4)
p. 11.4-20b (Rev. 4)
p. 11.4-21 (Rev. 12D)
p. 11.4-22 (Rev. 15B)
p. 11.4-22a (Rev. 15B)
p. 11.4-22b (Rev. 15B)
p. 11.4-23 (Rev. 12D)
p. 11.4-24 (Rev. 11C)
p. 11.4-25 (Rev. 14D)
p. 11.4-26 (Rev. 14D)
p. 11.4-27 (Rev. 12D)
p. 11.4-28 (Rev. 16)
p. 11.4-29 (Rev. 0)
p. 11.4-30 (Rev. 9A)
p. 11.4-31 (Rev. 15B)
p. 11.4-32 (Rev. 15B)
p. 11.4-33 (Rev. 14D)
t. 11.4-1 (sheet 1) (Rev. 12D)
t. 11.4-1 (sheet 1a) (Rev. 12D)
t. 11.4-1 (sheet 2) (Rev. 0)
t. 11.4-1 (sheet 3) (Rev. 9A)
t. 11.4-2 (Rev. 12D)
t. 11.4-3 (Rev. 15B)
t. 11.4-4 (Rev. 17A)
t. 11.4-5 (Rev. 9A)
t. 11.4-6 (Rev. 9A)
t. 11.4-7 (Rev. 9A)
f. 11.4-1 (Rev. 18A)
f. 11.4-2 (Rev. 14B)
f. 11.4-3 (Rev. 3)
f. 11.4-4 (Rev. 17A)
f. 11.4-5 (sheet 1) (Rev. 18A)
f. 11.4-5 (sheet 2) (Rev. 17A)
f. 11.4-6 (sheet 1) (Rev. 18A)
f. 11.4-6 (sheet 2) (Rev. 18A)
p. 11.5-1 (Rev. 17A)
p. 11.5-2 (Rev. 17A)
p. 11.5-3 (Rev. 17A)
p. 11.5-4 (Rev. 17A)
p. 11.5-5 (Rev. 17A)
p. 11.5-6 (Rev. 17A)
p. 11.5-7 (Rev. 17A)
p. 11.5-8 (Rev. 17A)
p. 11.5-9 (Rev. 17A)
t. 11.5-1 (Rev. 16)
t. 11.5-2 (Rev. 17A)
t. 11.5-3 (Rev. 17A)
t. 11.5-4 (sheet 1) (Rev. 17A)
t. 11.5-4 (sheet 2) (Rev. 17A)
t. 11.5-5 (Rev. 17A)
f. 11.5-1 (Rev. 16)
p. 11.6-1 (Rev. 14D)
p. i (chapter 12) (Rev. 18A)
p. ii (chapter 12) (Rev. 18B)
p. iii (chapter 12) (Rev. 18A)
p. iv (chapter 12) (Rev. 18A)
p. 12.1-1 (Rev. 15B)
p. 12.1-2 (Rev. 14D)
p. 12.1-3 (Rev. 15B)

p. 12.1-4 (Rev. 15B)
p. 12.1-5 (Rev. 10C)
p. 12.1-6 (Rev. 10C)
p. 12.1-7 (Rev. 17A)
p. 12.1-8 (Rev. 16)
p. 12.1-9 (Rev. 12D)
p. 12.1-10 (Rev. 15B)
p. 12.1-11 (Rev. 16)
p. 12.1-12 (Rev. 17A)
p. 12.1-13 (Rev. 12D)
p. 12.1-14 (Rev. 14D)
t. 12.1-1 (sheet 1) (Rev. 17A)
t. 12.1-1 (sheet 2) (Rev. 17A)
t. 12.1-1 (sheet 3) (Rev. 17A)
p. 12.2-1 (Rev. 10B)
p. 12.2-2 (Rev. 10B)
p. 12.2-3 (Rev. 0)
p. 12.2-4 (Rev. 17A)
p. 12.2-5 (Rev. 10B)
p. 12.2-6 (Rev. 18A)
p. 12.2-7 (Rev. 10B)
t. 12.2-1 (sheet 1) (Rev. 0)
t. 12.2-1 (sheet 2) (Rev. 12D)
t. 12.2-2 (sheet 1) (Rev. 12D)
t. 12.2-2 (sheet 2) (Rev. 12D)
p. 12.3-1 (Rev. 4)
p. 12.3-2 (Rev. 12A)
p. 12.3-3 (Rev. 10C)
p. 12.3-4 (Rev. 10C)
p. 12.3-5 (Rev. 16)
p. 12.3-6 (Rev. 18A)
p. 12.3-7 (Rev. 18A)
p. 12.3-8 (Rev. 10C)
p. 12.3-9 (Rev. 10C)
p. 12.3-10 (Rev. 18A)
p. 12.3-11 (Rev. 18B)
p. 12.3-12 (Rev. 18B)
p. 12.3-13 (Rev. 18A)
p. 12.3-14 (Rev. 18A)
p. 12.3-15 (Rev. 15B)
p. 12.3-16 (Rev. 10C)
p. 12.3-17 (Rev. 17A)
t. 12.3-1 (sheet 1) (Rev. 13C)
t. 12.3-1 (sheet 2) (Rev. 13C)
f. 12.3-1 (Rev. 13A)
f. 12.3-2 (Rev. 13A)
f. 12.3-3 (Rev. 13A)
f. 12.3-4 (Rev. 13A)
f. 12.3-5 (Rev. 13A)
f. 12.3-6 (Rev. 13A)
f. 12.3-7 (Rev. 13A)
f. 12.3-8 (Rev. 13A)
f. 12.3-9 (Rev. 13A)
f. 12.3-10 (Rev. 0)
f. 12.3-11 (Rev. 11D)
f. 12.3-12 (Rev. 10C)
f. 12.3-13 (Rev. 10C)
f. 12.3-14 (Rev. 0)
f. 12.3-15 (Rev. 13C)
f. 12.3-17 (Rev. 13A)
f. 12.3-18 (Rev. 10C)
p. 12.4-1 (Rev. 15B)
p. 12.4-2 (Rev. 12D)
p. 12.4-3 (Rev. 16)
p. 12.4-4 (Rev. 0)
t. 12.4-1 (Rev. 15B)
t. 12.4-2 (Rev. 15B)
t. 12.4-3 (Rev. 0)
p. 12.5-1 (Rev. 14D)
p. 12.5-2 (Rev. 16)
p. 12.5-3 (Rev. 17A)
p. 12.5-4 (Rev. 17A)
p. 12.5-5 (Rev. 16)
p. 12.5-6 (Rev. 16)
p. 12.5-7 (Rev. 16)
p. 12.5-8 (Rev. 17A)
p. 12.5-9 (Rev. 16)
p. 12.5-10 (Rev. 16)
p. 12.5-11 (Rev. 17A)
p. 12.5-12 (Rev. 16)
p. 12.5-13 (Rev. 18A)
p. 12.5-14 (Rev. 18A)
p. 12.5-15 (Rev. 16)
p. 12.5-16 (Rev. 16)
t. 12.5-1 (sheet 1) (Rev. 16)
t. 12.5-1 (sheet 2) (Rev. 16)
t. 12.5-1 (sheet 3) (Rev. 16)
t. 12.5-2 (Rev. 16)
f. 12.5-1 (Rev. 17A)
p. i (chapter 13) (Rev. 17A)
p. ii (chapter 13) (Rev. 18A)
p. iii (chapter 13) (Rev. 14D)
p. iv (chapter 13) (Rev. 17A)
p. v (chapter 13) (Rev. 15B)
p. 13.1-1 (Rev. 18A)
p. 13.1-2 (Rev. 16)
p. 13.1-3 (Rev. 15B)
p. 13.1-4 (Rev. 16)
p. 13.1-5 (Rev. 17A)
p. 13.1-6 (Rev. 16)
p. 13.1-7 (Rev. 16)
p. 13.1-8 (Rev. 15B)
p. 13.1-9 (Rev. 16)
p. 13.1-10 (Rev. 16)

p. 13.1-11 (Rev. 16)
p. 13.1-12 (Rev. 15B)
p. 13.1-13 (Rev. 15B)
p. 13.1-14 (Rev. 15B)
p. 13.1-15 (Rev. 17A)
p. 13.1-16 (Rev. 17A)
p. 13.1-17 (Rev. 16)
p. 13.1-18 (Rev. 16)
p. 13.1-19 (Rev. 15B)
p. 13.1-20 (Rev. 15B)
p. 13.1-21 (Rev. 15B)
p. 13.1-22 (Rev. 16)
p. 13.1-23 (Rev. 17A)
p. 13.1-24 (Rev. 17A)
f. 13.1-2 (Rev. 17A)
f. 13.1-3 (Rev. 15B)
f. 13.1-4 (Rev. 16)
f. 13.1-6 (Rev. 2)
p. 13.2-1 (Rev. 8)
p. 13.2-2 (Rev. 17A)
p. 13.2-3 (Rev. 13D)
p. 13.2-4 (Rev. 13D)
p. 13.2-5 (Rev. 12B)
p. 13.2-6 (Rev. 12B)
p. 13.2-7 (Rev. 12B)
p. 13.3-1 (Rev. 15B)
p. 13.4-1 (Rev. 18A)
p. 13.4-2 (Rev. 17B)
p. 13.4-3 (Rev. 17B)
p. 13.4-4 (Rev. 18A)
p. 13.4A-1 (Rev. 18A)
p. 13.4A-2 (Rev. 15B)
p. 13.4A-3 (Rev. 14D)
p. 13.4A-4 (Rev. 18A)
p. 13.4A-5 (Rev. 18A)
p. 13.4A-6 (Rev. 18A)
p. 13.4B-1 (Rev. 18A)
p. 13.4B-2 (Rev. 18A)
p. 13.4B-3 (Rev. 14D)
p. 13.4B-4 (Rev. 16)
p. 13.5-1 (Rev. 17B)
p. 13.5-2 (Rev. 17B)
p. 13.5-3 (Rev. 16)
p. 13.5-4 (Rev. 17A)
p. 13.5-5 (Rev. 17A)
p. 13.6-1 (Rev. 17B)
p. 13.6-2 (Rev. 17B)
p. 13.6-3 (Rev. 14D)
p. 13.6-4 (Rev. 14D)
p. 13.6-5 (Rev. 14D)
p. 13.7-1 (Rev. 15A)
p. 13.7-2 (Rev. 15A)
p. 13.7-3 (Rev. 15B)
p. 13.7-4 (Rev. 15A)
p. 13.7-5 (Rev. 15B)
p. 13.7-6 (Rev. 15A)
p. 13.7-7 (Rev. 16)
f. 13.7-1 (Rev. 14D)
p. i (chapter 14) (Rev. 18A)
p. ii (chapter 14) (Rev. 18A)
p. iii (chapter 14) (Rev. 18A)
p. iv (chapter 14) (Rev. 18A)
p. v (chapter 14) (Rev. 18A)
p. vi (chapter 14) (Rev. 18A)
p. vii (chapter 14) (Rev. 18A)
p. viii (chapter 14) (Rev. 18A)
p. 14.1-1 (Rev. 18A)
p. 14.1-2 (Rev. 18A)
p. 14.1-3 (Rev. 18A)
p. 14.1-4 (Rev. 18A)
p. 14.1-5 (Rev. 18A)
p. 14.1-6 (Rev. 18A)
p. 14.1-7 (Rev. 18A)
p. 14.1-8 (Rev. 18A)
p. 14.1-9 (Rev. 18A)
p. 14.1-10 (Rev. 18A)
p. 14.1-11 (Rev. 18A)
p. 14.1-12 (Rev. 18A)
p. 14.1-13 (Rev. 18A)
p. 14.1-14 (Rev. 18A)
p. 14.1-15 (Rev. 18A)
p. 14.1-16 (Rev. 18A)
p. 14.1-17 (Rev. 18A)
p. 14.1-18 (Rev. 18A)
p. 14.1-19 (Rev. 18A)
p. 14.1-20 (Rev. 18A)
p. 14.1-21 (Rev. 18A)
p. 14.1-22 (Rev. 18A)
p. 14.1-23 (Rev. 18A)
p. 14.1-24 (Rev. 18A)
p. 14.1-25 (Rev. 18A)
p. 14.1-26 (Rev. 18A)
p. 14.1-27 (Rev. 18A)
p. 14.1-28 (Rev. 18A)
t. 14.1-1 (Rev. 18A)
t. 14.1-2 (Rev. 18A)
t. 14.1-3 (Rev. 18A)
f. 14.1-1 (Rev. 18A)
f. 14.1-2 (Rev. 18A)
f. 14.1-3 (Rev. 18A)
f. 14.1-4 (Rev. 18A)
f. 14.1-5 (Rev. 18A)
f. 14.1-6 (Rev. 18A)
f. 14.1-7 (Rev. 18A)

f. 14.1-8 (Rev. 18A)
f. 14.1-9 (Rev. 18A)
f. 14.1-10 (sheet 1) (Rev. 18A)
f. 14.1-10 (sheet 2) (Rev. 18A)
f. 14.1-11 (Rev. 18A)
f. 14.1-12 (Rev. 18A)
p. 14.2-1 (Rev. 18A)
p. 14.2-2 (Rev. 18A)
p. 14.2-3 (Rev. 18A)
p. 14.2-4 (Rev. 18A)
p. 14.2-5 (Rev. 18A)
p. 14.2-6 (Rev. 18A)
p. 14A-1 (Rev. 18A)
p. 14A-2 (Rev. 18A)
p. 14A-3 (Rev. 18A)
p. 14A-4 (Rev. 18A)
p. 14A-5 (Rev. 18A)
p. 14A-6 (Rev. 18A)
p. 14A-7 (Rev. 18A)
p. 14A-8 (Rev. 18A)
p. 14A-9 (Rev. 18A)
p. 14A-10 (Rev. 18A)
p. 14A-11 (Rev. 18A)
p. 14A-12 (Rev. 18A)
p. 14A-13 (Rev. 18A)
p. 14A-14 (Rev. 18A)
p. 14A-15 (Rev. 18A)
p. 14A-16 (Rev. 18A)
p. 14A-17 (Rev. 18A)
p. 14A-18 (Rev. 18A)
p. 14A-19 (Rev. 18A)
p. 14A-20 (Rev. 18A)
p. 14A-21 (Rev. 18A)
p. 14A-22 (Rev. 18A)
p. 14A-23 (Rev. 18A)
p. 14A-24 (Rev. 18A)
p. 14A-25 (Rev. 18A)
p. 14A-26 (Rev. 18A)
p. 14A-27 (Rev. 18A)
p. 14A-28 (Rev. 18A)
p. 14A-29 (Rev. 18A)
p. 14A-30 (Rev. 18A)
p. 14A-31 (Rev. 18A)
p. 14A-32 (Rev. 18A)
p. 14A-33 (Rev. 18A)
p. 14A-34 (Rev. 18A)
p. 14A-35 (Rev. 18A)
p. 14A-36 (Rev. 18A)
p. 14A-37 (Rev. 18A)
p. 14A-38 (Rev. 18A)
p. 14A-39 (Rev. 18A)
p. 14A-40 (Rev. 18A)
p. 14A-41 (Rev. 18A)
p. 14A-42 (Rev. 18A)
p. 14A-43 (Rev. 18A)
p. 14A-44 (Rev. 18A)
p. 14A-45 (Rev. 18A)
p. 14A-46 (Rev. 18A)
p. 14A-47 (Rev. 18A)
p. 14A-48 (Rev. 18A)
p. 14A-49 (Rev. 18A)
p. 14A-50 (Rev. 18A)
p. 14A-51 (Rev. 18A)
p. 14A-52 (Rev. 18A)
p. 14A-53 (Rev. 18A)
p. 14A-54 (Rev. 18A)
p. 14A-55 (Rev. 18A)
p. 14A-56 (Rev. 18A)
p. 14A-57 (Rev. 18A)
p. 14A-58 (Rev. 18A)
p. 14A-59 (Rev. 18A)
p. 14A-60 (Rev. 18A)
p. 14A-61 (Rev. 18A)
p. 14A-62 (Rev. 18A)
p. 14A-63 (Rev. 18A)
p. 14A-64 (Rev. 18A)
p. 14A-65 (Rev. 18A)
p. 14A-66 (Rev. 18A)
p. 14A-67 (Rev. 18A)
p. 14A-68 (Rev. 18A)
p. 14A-69 (Rev. 18A)
p. 14A-70 (Rev. 18A)
p. 14A-71 (Rev. 18A)
p. 14A-72 (Rev. 18A)
p. 14A-73 (Rev. 18A)
p. 14A-74 (Rev. 18A)
p. 14A-75 (Rev. 18A)
p. 14A-76 (Rev. 18A)
p. 14A-77 (Rev. 18A)
p. 14A-78 (Rev. 18A)
p. 14A-79 (Rev. 18A)
p. 14A-80 (Rev. 18A)
p. 14A-81 (Rev. 18A)
p. 14A-82 (Rev. 18A)
p. 14A-83 (Rev. 18A)
p. 14A-84 (Rev. 18A)
p. 14A-85 (Rev. 18A)
p. 14A-86 (Rev. 18A)
p. 14A-87 (Rev. 18A)
p. 14A-88 (Rev. 18A)
p. 14B-1 (Rev. 18A)
p. 14B-2 (Rev. 18A)
p. 14B-3 (Rev. 18A)
p. 14B-4 (Rev. 18A)

p. 14B-5 (Rev. 18A)
p. 14B-6 (Rev. 18A)
p. 14B-7 (Rev. 18A)
p. 14B-8 (Rev. 18A)
p. 14B-9 (Rev. 18A)
p. 14B-10 (Rev. 18A)
p. 14B-11 (Rev. 18A)
p. 14B-12 (Rev. 18A)
p. 14B-13 (Rev. 18A)
p. 14B-14 (Rev. 18A)
p. 14B-15 (Rev. 18A)
p. 14B-16 (Rev. 18A)
p. 14B-17 (Rev. 18A)
p. 14B-18 (Rev. 18A)
p. 14B-19 (Rev. 18A)
p. 14B-20 (Rev. 18A)
p. 14B-21 (Rev. 18A)
p. 14B-22 (Rev. 18A)
p. 14B-23 (Rev. 18A)
p. 14B-24 (Rev. 18A)
p. 14B-25 (Rev. 18A)
p. 14B-26 (Rev. 18A)
p. 14B-27 (Rev. 18A)
p. 14B-28 (Rev. 18A)
p. 14B-29 (Rev. 18A)
p. 14B-30 (Rev. 18A)
p. 14B-31 (Rev. 18A)
p. 14B-32 (Rev. 18A)
p. 14B-33 (Rev. 18A)
p. 14B-34 (Rev. 18A)
p. 14B-35 (Rev. 18A)
p. 14B-36 (Rev. 18A)
p. 14B-37 (Rev. 18A)
p. 14B-38 (Rev. 18A)
p. 14B-39 (Rev. 18A)
p. 14B-40 (Rev. 18A)
p. 14B-41 (Rev. 18A)
p. 14B-42 (Rev. 18A)
p. 14B-43 (Rev. 18A)
p. 14B-44 (Rev. 18A)
p. 14B-45 (Rev. 18A)
p. 14B-46 (Rev. 18A)
p. 14B-47 (Rev. 18A)
p. 14B-48 (Rev. 18A)
p. 14B-49 (Rev. 18A)
p. 14B-50 (Rev. 18A)
p. 14B-51 (Rev. 18A)
p. 14B-52 (Rev. 18A)
p. 14B-53 (Rev. 18A)
p. 14B-54 (Rev. 18A)
p. 14B-55 (Rev. 18A)
p. i (chapter 15) (Rev. 18A)
p. ii (chapter 15) (Rev. 17B)
p. iii (chapter 15) (Rev. 17B)
p. iv (chapter 15) (Rev. 17B)
p. v (chapter 15) (Rev. 17B)
p. vi (chapter 15) (Rev. 17B)
p. vii (chapter 15) (Rev. 18A)
p. viii (chapter 15) (Rev. 17B)
p. 15.1-1 (Rev. 18A)
p. 15.1-2 (Rev. 17B)
p. 15.1-3 (Rev. 18B)
p. 15.1-4 (Rev. 18B)
p. 15.1-5 (Rev. 18B)
p. 15.1-6 (Rev. 17B)
p. 15.1-7 (Rev. 17B)
p. 15.1-8 (Rev. 17B)
p. 15.1-9 (Rev. 17B)
p. 15.1-10 (Rev. 18B)
p. 15.1-11 (Rev. 17B)
p. 15.1-12 (Rev. 17B)
p. 15.1-13 (Rev. 17B)
p. 15.1-14 (Rev. 17B)
p. 15.1-15 (Rev. 17B)
p. 15.1-16 (Rev. 18A)
p. 15.1-17 (Rev. 17B)
p. 15.1-18 (Rev. 17B)
p. 15.1-19 (Rev. 17B)
p. 15.1-20 (Rev. 17B)
p. 15.1-21 (Rev. 18B)
p. 15.1-22 (Rev. 17B)
p. 15.1-23 (Rev. 17B)
p. 15.1-24 (Rev. 17B)
p. 15.1-25 (Rev. 17B)
p. 15.1-26 (Rev. 17B)
t. 15.1-1 (sheet 1) (Rev. 17B)
t. 15.1-1 (sheet 2) (Rev. 17B)
t. 15.1-2 (sheet 1) (Rev. 17B)
t. 15.1-2 (sheet 2) (Rev. 17B)
t. 15.1-3 (sheet 1) (Rev. 17B)
t. 15.1-3 (sheet 2) (Rev. 17B)
t. 15.1-3 (sheet 3) (Rev. 17B)
t. 15.1-3 (sheet 4) (Rev. 17B)
t. 15.1-3 (sheet 5) (Rev. 17B)
t. 15.1-3 (sheet 6) (Rev. 18B)
t. 15.1-4 (Rev. 17B)
f. 15.1-1 (Rev. 17B)
f. 15.1-2 (Rev. 17B)
f. 15.1-3 (Rev. 17B)
p. 15.2-1 (Rev. 17B)
p. 15.2-2 (Rev. 17B)
p. 15.2-3 (Rev. 17B)
p. 15.2-4 (Rev. 17B)
p. 15.2-5 (Rev. 17B)

p. 15.2-6 (Rev. 17B)
p. 15.2-7 (Rev. 17B)
p. 15.2-8 (Rev. 17B)
p. 15.2-9 (Rev. 17B)
p. 15.2-10 (Rev. 17B)
p. 15.2-11 (Rev. 17B)
p. 15.2-12 (Rev. 17B)
p. 15.2-13 (Rev. 17B)
p. 15.2-14 (Rev. 17B)
p. 15.2-15 (Rev. 17B)
p. 15.2-16 (Rev. 17B)
p. 15.2-17 (Rev. 17B)
p. 15.2-18 (Rev. 17B)
p. 15.2-19 (Rev. 17B)
p. 15.2-20 (Rev. 17B)
p. 15.2-21 (Rev. 17B)
p. 15.2-22 (Rev. 17B)
p. 15.2-23 (Rev. 17B)
p. 15.2-24 (Rev. 17B)
p. 15.2-25 (Rev. 17B)
p. 15.2-26 (Rev. 17B)
p. 15.2-27 (Rev. 17B)
p. 15.2-28 (Rev. 17B)
p. 15.2-29 (Rev. 17B)
p. 15.2-30 (Rev. 17B)
p. 15.2-31 (Rev. 17B)
p. 15.2-32 (Rev. 17B)
p. 15.2-33 (Rev. 17B)
p. 15.2-34 (Rev. 17B)
p. 15.2-35 (Rev. 17B)
p. 15.2-36 (Rev. 17B)
p. 15.2-37 (Rev. 17B)
p. 15.2-38 (Rev. 17B)
p. 15.2-39 (Rev. 17B)
p. 15.2-40 (Rev. 17B)
p. 15.2-41 (Rev. 17B)
p. 15.2-42 (Rev. 17B)
p. 15.2-43 (Rev. 17B)
p. 15.2-44 (Rev. 17B)
p. 15.2-45 (Rev. 17B)
p. 15.2-46 (Rev. 17B)
p. 15.2-47 (Rev. 17B)
p. 15.2-48 (Rev. 17B)
p. 15.2-49 (Rev. 17B)
t. 15.2-1 (Rev. 17B)
t. 15.2-2 (sheet 1) (Rev. 17B)
t. 15.2-2 (sheet 2) (Rev. 17B)
t. 15.2-3 (Rev. 17B)
t. 15.2.4 (Rev. 17B)
t. 15.2-5 (Rev. 17B)
f. 15.2-1 (Rev. 17B)
f. 15.2-2 (Rev. 17B)
f. 15.2-3 (Rev. 17B)
f. 15.2-4 (Rev. 17B)
f. 15.2-5 (Rev. 17B)
f. 15.2-6 (Rev. 17B)
f. 15.2-7 (Rev. 17B)
f. 15.2-8 (Rev. 17B)
f. 15.2-9 (Rev. 17B)
f. 15.2-10 (Rev. 17B)
f. 15.2-11 (Rev. 17B)
f. 15.2-12 (Rev. 17B)
f. 15.2-13 (Rev. 17B)
f. 15.2-14 (Rev. 17B)
f. 15.2-15 (Rev. 17B)
f. 15.2-16 (Rev. 17B)
f. 15.2-17 (Rev. 17B)
f. 15.2-18 (Rev. 17B)
f. 15.2-19 (Rev. 17B)
f. 15.2-20 (Rev. 17B)
f. 15.2-21 (Rev. 17B)
f. 15.2-22 (Rev. 17B)
f. 15.2-23 (Rev. 17B)
f. 15.2-24 (Rev. 17B)
f. 15.2-25 (Rev. 17B)
f. 15.2-26 (Rev. 17B)
p. 15.3-1 (Rev. 17B)
p. 15.3-2 (Rev. 17B)
p. 15.3-3 (Rev. 17B)
p. 15.3-4 (Rev. 17B)
p. 15.3-5 (Rev. 17B)
p. 15.3-6 (Rev. 17B)
p. 15.3-7 (Rev. 17B)
p. 15.3-8 (Rev. 17B)
p. 15.3-9 (Rev. 17B)
p. 15.3-10 (Rev. 17B)
p. 15.3-11 (Rev. 17B)
p. 15.3-12 (Rev. 17B)
p. 15.3-13 (Rev. 17B)
p. 15.3-14 (Rev. 17B)
p. 15.3-15 (Rev. 17B)
p. 15.3-16 (Rev. 17B)
p. 15.3-17 (Rev. 17B)
p. 15.3-18 (Rev. 17B)
p. 15.3-19 (Rev. 18A)
p. 15.3-20 (Rev. 17B)
p. 15.3-21 (Rev. 17B)
p. 15.3-22 (Rev. 17B)
p. 15.3-23 (Rev. 17B)
p. 15.3-24 (Rev. 17B)
p. 15.3-25 (Rev. 17B)
p. 15.3-26 (Rev. 17B)
p. 15.3-27 (Rev. 17B)
p. 15.3-28 (Rev. 17B)

p. 15.3-29 (Rev. 18A)
p. 15.3-30 (Rev. 17B)
p. 15.3-31 (Rev. 17B)
p. 15.3-32 (Rev. 17B)
p. 15.3-33 (Rev. 17B)
p. 15.3-34 (Rev. 17B)
p. 15.3-35 (Rev. 17B)
p. 15.3-36 (Rev. 17B)
p. 15.3-37 (Rev. 17B)
p. 15.3-38 (Rev. 17B)
p. 15.3-39 (Rev. 17B)
p. 15.3-40 (Rev. 17B)
p. 15.3-41 (Rev. 17B)
p. 15.3-42 (Rev. 17B)
p. 15.3-43 (Rev. 17B)
p. 15.3-44 (Rev. 17B)
p. 15.3-45 (Rev. 17B)
p. 15.3-46 (Rev. 17B)
p. 15.3-47 (Rev. 17B)
p. 15.3-48 (Rev. 17B)
t. 15.3-1 (Rev. 17B)
t. 15.3-2 (Rev. 17B)
t. 15.3-3 (Rev. 17B)
t. 15.3-4 (Rev. 17B)
t. 15.3-5 (Rev. 17B)
t. 15.3-6 (Rev. 17B)
t. 15.3-7 (Rev. 17B)
t. 15.3-8 (Rev. 17B)
t. 15.3-9 (Rev. 17B)
t. 15.3-10 (Rev. 17B)
f. 15.3-1 (sheet 1) (Rev. 17B)
f. 15.3-1 (sheet 2) (Rev. 17B)
f. 15.3-1 (sheet 3) (Rev. 17B)
f. 15.3-2 (Rev. 17B)
f. 15.3-3 (Rev. 17B)
p. 15.4-1 (Rev. 17B)
p. 15.4-2 (Rev. 17B)
p. 15.4-3 (Rev. 17B)
p. 15.4-4 (Rev. 17B)
p. 15.4-5 (Rev. 17B)
p. 15.4-6 (Rev. 17B)
p. 15.4-7 (Rev. 17B)
p. 15.4-8 (Rev. 17B)
p. 15.4-9 (Rev. 17B)
p. 15.4-10 (Rev. 17B)
p. 15.4-11 (Rev. 17B)
p. 15.4-12 (Rev. 17B)
p. 15.4-13 (Rev. 17B)
p. 15.4-14 (Rev. 17B)
p. 15.4-15 (Rev. 17B)
p. 15.4-16 (Rev. 17B)
p. 15.4-17 (Rev. 17B)
p. 15.4-18 (Rev. 17B)
p. 15.4-19 (Rev. 17B)
p. 15.4-20 (Rev. 17B)
p. 15.4-21 (Rev. 17B)
p. 15.4-22 (Rev. 18B)
p. 15.4-23 (Rev. 17B)
p. 15.4-24 (Rev. 17B)
p. 15.4-25 (Rev. 17B)
p. 15.4-26 (Rev. 17B)
p. 15.4-27 (Rev. 17B)
p. 15.4-28 (Rev. 17B)
p. 15.4-29 (Rev. 17B)
p. 15.4-30 (Rev. 17B)
p. 15.4-31 (Rev. 17B)
p. 15.4-32 (Rev. 17B)
p. 15.4-33 (Rev. 17B)
p. 15.4-34 (Rev. 17B)
p. 15.4-35 (Rev. 17B)
p. 15.4-36 (Rev. 17B)
p. 15.4-37 (Rev. 18A)
p. 15.4-38 (Rev. 17B)
p. 15.4-39 (Rev. 17B)
p. 15.4-40 (Rev. 17B)
p. 15.4-41 (Rev. 18B)
p. 15.4-42 (Rev. 17B)
p. 15.4-43 (Rev. 17B)
p. 15.4-44 (Rev. 17B)
t. 15.4-1 (Rev. 17B)
t. 15.4-2 (Rev. 17B)
t. 15.4-3 (Rev. 17B)
t. 15.4-4 (Rev. 17B)
t. 15.4-5 (Rev. 17B)
t. 15.4-6 (Rev. 17B)
t. 15.4-7 (Rev. 17B)
f. 15.4-1 (Rev. 17B)
f. 15.4-2 (Rev. 17B)
f. 15.4-3 (Rev. 17B)
f. 15.4-4 (Rev. 17B)
f. 15.4-5 (Rev. 17B)
f. 15.4-6 (Rev. 17B)
f. 15.4-7 (Rev. 17B)
f. 15.4-8 (Rev. 17B)
f. 15.4-9 (Rev. 17B)
p i (Supplement 15A) (Rev 18B)
p. ii (Supplement 15A) (Rev 18B)
p. iii (Supplement 15A) (Rev 18B)
p. iv (Supplement 15A) (Rev 18B)
p. v (Supplement 15A) (Rev 18B)
p. vi (Supplement 15A) (Rev 18B)
p. 15A-1 (Rev. 0)
p. 15A-2 (Rev. 8)
p. 15A-3 (Rev. 0)

p. 15A-4 (Rev. 0)
p. 15A-5 (Rev. 0)
p. 15A-6 (Rev. 0)
p. 15A-7 (Rev. 18A)
p. 15A-8 (Rev. 5)
p. 15A-9 (Rev. 18A)
p. 15A-10 (Rev. 0)
p. 15A-11 (Rev. 5)
p. 15A-12 (Rev. 13C)
p. 15A-13 (Rev. 17B)
p. 15A-14 (Rev. 17B)
p. 15A-15 (Rev. 15B)
p. 15A-16 (Rev. 8)
p. 15A-16a (Rev. 18A)
p. 15A-16b (Rev. 8)
p. 15A-17 (Rev. 0)
p. 15A-18 (Rev. 0)
p. 15A-19 (Rev. 3)
p. 15A-20 (Rev. 3)
p. 15A-21 (Rev. 3)
p. 15A-22 (Rev. 18A)
p. 15A-23 (Rev. 0)
p. 15A-24 (Rev. 0)
p. 15A-25 (Rev. 0)
p. 15A-26 (Rev. 0)
p. 15A-27 (Rev. 0)
p. 15A-28 (Rev. 0)
p. 15A-29 (Rev. 0)
p. 15A-30 (Rev. 0)
p. 15A-31 (Rev. 0)
p. 15A-32 (Rev. 0)
p. 15A-33 (Rev. 0)
p. 15A-34 (Rev. 0)
p. 15A-35 (Rev. 18A)
p. 15A-36 (Rev. 18A)
p. 15A-37 (Rev. 18A)
p. 15A-38 (Rev. 9B)
p. 15A-39 (Rev. 9B)
p. 15A-39a (Rev. 9B)
p. 15A-39b (Rev. 3)
p. 15A-40 (Rev. 0)
p. 15A-41 (Rev. 8)
p. 15A-42 (Rev. 18A)
p. 15A-43 (Rev. 18A)
p. 15A-44 (Rev. 18A)
p. 15A-45 (Rev. 18A)
p. 15A-46 (Rev. 18A)
p. 15A-47 (Rev. 18A)
p. 15A-48 (Rev. 18A)
p. 15A-49 (Rev. 18A)
p. 15A-50 (Rev. 18A)
p. 15A-51 (Rev. 18A)
p. 15A-52 (Rev. 18A)
p. 15A-53 (Rev. 8)
p. 15A-54 (Rev. 8)
p. 15A-55 (Rev. 18A)
p. 15A-56 (Rev. 18A)
p. 15A-57 (Rev. 17B)
p. 15A-58 (Rev. 0)
p. 15A-59 (Rev. 18A)
p. 15A-60 (Rev. 6)
p. 15A-61 (Rev. 18A)
p. 15A-62 (Rev. 5)
p. 15A-63 (Rev. 0)
p. 15A-64 (Rev. 9B)
t. 15A-1 (Rev. 0)
t. 15A-2 (Rev. 16)
t. 15A-3 (sheet 1) (Rev. 0)
t. 15A-3 (sheet 2) (Rev. 0)
f. 15A-1 (Rev. 0)
f. 15A-2 (Rev. 0)
f. 15A-3 (Rev. 0)
f. 15A-4 (Rev. 0)
f. 15A-5 (sheet 1) (Rev. 8)
f. 15A-5 (sheet 2) (Rev. 11D)
f. 15A-6 (sheet 1) (Rev. 5)
f. 15A-6 (sheet 2) (Rev. 5)
f. 15A-6 (sheet 3) (Rev. 5)
f. 15A-7 (Rev. 0)
f. 15A-8 (Rev. 14A)
f. 15A-9 (Rev. 14B)
f. 15A-10 (Rev. 0)
f. 15A-11 (Rev. 17B)
f. 15A-12 (Rev. 0)
f. 15A-13 (Rev. 17B)
f. 15A-14 (Rev. 0)
f. 15A-15 (Rev. 10B)
f. 15A-16 (Rev. 10B)
f. 15A-17 (Rev. 10B)
f. 15A-18 (Rev. 0)
f. 15A-19 (Rev. 0)
f. 15A-20 (Rev. 0)
f. 15A-21 (Rev. 0)
f. 15A-22 (Rev. 0)
f. 15A-23 (Rev. 4)
f. 15A-24 (Rev. 17B)
f. 15A-25 (Rev. 17B)
f. 15A-26 (sheet 1) (Rev. 6)
f. 15A-26 (sheet 2) (Rev. 3)
f. 15A-27 (Rev. 15A)
f. 15A-28 (Rev. 3)
p. i (Supplement 15A.A) (Rev 18B)
p. 15A.A-1 (Rev. 3)
p. 15A.A-2 (Rev. 0)

p. 15A.A-3 (Rev. 17B)
p. 15A.A-4 (Rev. 8)
p. 15A.A-5 (Rev. 8)
p. 15A.A-6 (Rev. 8)
p. 15A.A-7 (Rev. 7)
P. i (Supplement 15C) (Rev 18B)
P. ii (Supplement 15C) (Rev 18B)
P. iii (Supplement 15C) (Rev 18B)
P. iv (Supplement 15C) (Rev 18B)
P. v (Supplement 15C) (Rev 18B)
P. vi (Supplement 15C) (Rev 18B)
P. vii (Supplement 15C) (Rev 18B)
p. 15C-1 (Rev. 18B)
p. 15C-2 (Rev. 18B)
p. 15C-3 (Rev. 18B)
p. 15C-4 (Rev. 18B)
p. 15C-5 (Rev. 18B)
p. 15C-6 (Rev. 18B)
p. 15C-7 (Rev. 18B)
p. 15C-8 (Rev. 18B)
p. 15C-9 (Rev. 18B)
p. 15C-10 (Rev. 18B)
p. 15C-11 (Rev. 18B)
p. 15C-12 (Rev. 18B)
p. 15C-13 (Rev. 18B)
p. 15C-14 (Rev. 18B)
p. 15C-15 (Rev. 18B)
p. 15C-16 (Rev. 18B)
p. 15C-17 (Rev. 18B)
p. 15C-18 (Rev. 18B)
p. 15C-19 (Rev. 18B)
p. 15C-20 (Rev. 18B)
p. 15C-21 (Rev. 18B)
p. 15C-22 (Rev. 18B)
p. 15C-23 (Rev. 18B)
p. 15C-24 (Rev. 18B)
p. 15C-25 (Rev. 18B)
p. 15C-26 (Rev. 18B)
p. 15C-27 (Rev. 18B)
p. 15C-28 (Rev. 18B)
p. 15C-29 (Rev. 18B)
p. 15C-30 (Rev. 18B)
p. 15C-31 (Rev. 18B)
p. 15C-32 (Rev. 18B)
p. 15C-33 (Rev. 18B)
p. 15C-34 (Rev. 18B)
p. 15C-35 (Rev. 18B)
p. 15C-36 (Rev. 18B)
p. 15C-37 (Rev. 18B)
p. 15C-38 (Rev. 18B)
p. 15C-39 (Rev. 18B)
p. 15C-40 (Rev. 18B)
p. 15C-41 (Rev. 18B)
p. 15C-42 (Rev. 18B)
p. 15C-43 (Rev. 18B)
p. 15C-44 (Rev. 18B)
p. 15C-45 (Rev. 18B)
p. 15C-46 (Rev. 18B)
p. 15C-47 (Rev. 18B)
p. 15C-48 (Rev. 18B)
p. 15C-49 (Rev. 18B)
p. 15C-50 (Rev. 18B)
p. 15C-51 (Rev. 18B)
p. 15C-52 (Rev. 18B)
p. 15C-53 (Rev. 18B)
p. 15C-54 (Rev. 18B)
p. 15C-55 (Rev. 18B)
p. 15C-56 (Rev. 18B)
p. 15C-57 (Rev. 18B)
p. 15C-58 (Rev. 18B)
p. 15C-59 (Rev. 18B)
p. 15C-60 (Rev. 18B)
p. 15C-61 (Rev. 18B)
p. 15C-62 (Rev. 18B)
p. 15C-63 (Rev. 18B)
p. 15C-64 (Rev. 18B)
p. 15C-65 (Rev. 18B)
p. 15C-66 (Rev. 18B)
p. 15C-67 (Rev. 18B)
p. 15C-68 (Rev. 18B)
p. 15C-69 (Rev. 18B)
p. 15C-70 (Rev. 18B)
p. 15C-71 (Rev. 18B)
p. 15C-72 (Rev. 18B)
p. 15C-73 (Rev. 18B)
t. 15C-1 (Rev. 18B)
t. 15C-2 (sheet 1) (Rev. 18B)
t. 15C-2 (sheet 2) (Rev. 18B)
t. 15C-3 (sheet 1) (Rev. 18B)
t. 15C-3 (sheet 2) (Rev. 18B)
t. 15C-4 (sheet 1) (Rev. 18B)
t. 15C-4 (sheet 2) (Rev. 18B)
t. 15C-5 (sheet 1) (Rev. 18B)
t. 15C-5 (sheet 2) (Rev. 18B)
t. 15C-5 (sheet 3) (Rev. 18B)
t. 15C-6 (sheet 1) (Rev. 18B)
t. 15C-6 (sheet 2) (Rev. 18B)
t. 15C-6 (sheet 3) (Rev. 18B)
t. 15C-6 (sheet 4) (Rev. 18B)
t. 15C-7 (Rev. 18B)
t. 15C-8 (sheet 1) (Rev. 18B)
t. 15C-8 (sheet 2) (Rev. 18B)
t. 15C-9 (Rev. 18B)
t. 15C-10 (Rev. 18B)

f. 15C-1 (Rev. 18B)
f. 15C-2 (Rev. 18B)
f. 15C-3 (Rev. 18B)
f. 15C-4 (Rev. 18B)
f. 15C-5 (Rev. 18B)
f. 15C-6 (Rev. 18B)
f. 15C-7 (Rev. 18B)
f. 15C-8 (Rev. 18B)
f. 15C-9 (Rev. 18B)
f. 15C-10 (Rev. 18B)
f. 15C-11 (Rev. 18B)
f. 15C-12 (Rev. 18B)
f. 15C-13 (Rev. 18B)
f. 15C-14 (Rev. 18B)
f. 15C-15 (Rev. 18B
f. 15C-16 (Rev. 18B)
f. 15C-17 (Rev. 18B)
f. 15C-18 (Rev. 18B)
f. 15C-19 (Rev. 18B)
f. 15C-20 (Rev. 18B)
f. 15C-21 (Rev. 18B)
f. 15C-22 (Rev. 18B)
f. 15C-23 (Rev. 18B)
f. 15C-24 (Rev. 18B)
f. 15C-25 (Rev. 18B)
f. 15C-26 (Rev. 18B)
f. 15C-27 (Rev. 18B)
f. 15C-28 (Rev. 18B)
f. 15C-29 (Rev. 18B)
f. 15C-30 (Rev. 18B)
f. 15C-31 (Rev. 18B)
f. 15C-32 (Rev. 18B)
f. 15C-33 (Rev. 18B)
f. 15C-34 (Rev. 18B)
f. 15C-35 (Rev. 18B)
f. 15C-36 (Rev. 18B)
f. 15C-37 (Rev. 18B)
f. 15C-38 (Rev. 18B)
f. 15C-39 (Rev. 18B)
f. 15C-40 (Rev. 18B)
f. 15C-41 (Rev. 18B)
f. 15C-42 (Rev. 18B)
f. 15C-43 (Rev. 18B)
f. 15C-44 (Rev. 18B)
f. 15C-45 (Rev. 18B)
f. 15C-46 (Rev. 18B)
f. 15C-47 (Rev. 18B)
f. 15C-48 (Rev. 18B)
f. 15C-49 (Rev. 18B)
f. 15C-50 (Rev. 18B)
f. 15C-51 (Rev. 18B)
f. 15C-52 (Sheet 1) (Rev. 18B)
f. 15C-52 (Sheet 2) (Rev. 18B)
f. 15C-53 (Rev. 18B)
p. 16.0-1 (Rev. 14D)
p. i (chapter 17) (Rev. 18A)
p. ii (chapter 17) (Rev. 18A)
p. iii (chapter 17) (Rev. 18A)
p. iv (chapter 17) (Rev. 18A)
p. v (chapter 17) (Rev. 18A)
p. 17.1-1 (Rev. 18A)
p. 17.2-1 (Rev. 18A)
p. 17.2-2 (Rev. 16)
p. 17.2-3 (Rev. 15B)
p. 17.2-4 (Rev. 15B)
p. 17.2-5 (Rev. 15B)
p. 17.2-6 (Rev. 16)
p. 17.2-6a (Rev. 16)
p. 17.2-6b (Rev. 16)
p. 17.2-7 (Rev. 15B)
p. 17.2-8 (Rev. 18A)
p. 17.2-9 (Rev. 18A)
p. 17.2-10 (Rev. 15B)
p. 17.2-11 (Rev. 15B)
p. 17.2-12 (Rev. 18A)
p. 17.2-13 (Rev. 18A)
p. 17.2-14 (Rev. 15B)
p. 17.2-15 (Rev. 15B)
p. 17.2-16 (Rev. 16)
p. 17.2-17 (Rev. 17B)
p. 17.2-17a (Rev. 16)
p. 17.2-17b (Rev. 16)
p. 17.2-18 (Rev. 15B)
p. 17.2-19 (Rev. 15B)
p. 17.2-20 (Rev. 15B)
p. 17.2-21 (Rev. 15B)
p. 17.2-22 (Rev. 15B)
p. 17.2-23 (Rev. 15B)
p. 17.2-24 (Rev. 15B)
p. 17.2-25 (Rev. 15B)
p. 17.2-26 (Rev. 15B)
p. 17.2-27 (Rev. 15B)
p. 17.2-28 (Rev. 15B)
p. 17.2-29 (Rev. 15B)
p. 17.2-30 (Rev. 16)
p. 17.2-31 (Rev. 15B)
p. 17.2-32 (Rev. 15B)
p. 17.2-33 (Rev. 15B)
t. 17.2-1 (Rev. 17A)
t. 17.2-2 (sheet 1) (Rev. 18A)
t. 17.2-2 (sheet 2) (Rev. 18A)
t. 17.2-2 (sheet 3) (Rev. 18A)
t. 17.2-2 (sheet 4) (Rev. 18A)
t. 17.2-2 (sheet 5) (Rev. 18A)

t. 17.2-2 (sheet 6) (Rev. 18A)
t. 17.2-2 (sheet 7) (Rev. 18A)
t. 17.2-2 (sheet 8) (Rev. 18A)
t. 17.2-2 (sheet 9) (Rev. 18A)
f. 17.2-1 (Rev. 15B)
p. 17.2A-1 (Rev. 18B)
p. 17.2A-2 (Rev. 18B)
p. 17.2A-3 (Rev. 18A)
p. 17.2A-4 (Rev. 18A)
t. 17.2A-1 (Rev. 17A)
p. i (appendix A) (Rev. 9A)
p. ii (appendix A) (Rev. 9A)
p. iii (appendix A) (Rev. 11C)
p. iv (appendix A) (Rev. 9A)
p. v (appendix A) (Rev. 9A)
p. vi (appendix A) (Rev. 9A)
p. vii (appendix A) (Rev. 1)
p. viii (appendix A) (Rev. 9A)
p. ix (appendix A) (Rev. 12C)
p. x (appendix A) (Rev. 12C)
p. xi (appendix A) (Rev. 9A)
p. A.1-1 (Rev. 1)
p. A.2-1 (Rev. 0)
p. A.3-1 (Rev. 18A)
p. A.4-1 (Rev. 0)
p. A.5-1 (Rev. 18A)
p. A.6-1 (Rev. 0)
p. A.7-1 (Rev. 0)
p. A.8-1 (Rev. 15B)
p. A.9-1 (Rev. 0)
p. A.10-1 (Rev. 15B)
p. A.11-1 (Rev. 0)
p. A.12-1 (Rev. 0)
p. A.13-1 (Rev. 0)
p. A.14-1 (Rev. 0)
p. A.15-1 (Rev. 0)
p. A.16-1 (Rev. 16)
p. A.17-1 (Rev. 15B)
p. A.18-1 (Rev. 0)
p. A.19-1 (Rev. 0)
p. A.20-1 (Rev. 0)
p. A.21-1 (Rev. 0)
p. A.22-1 (Rev. 0)
p. A.23-1 (Rev. 0)
p. A.24-1 (Rev. 0)
p. A.25-1 (Rev. 18A)
p. A.26-1 (Rev. 4)
p. A.27-1 (Rev. 0)
p. A.28-1 (Rev. 15B)
p. A.29-1 (Rev. 18A)
p. A.30-1 (Rev. 0)
p. A.31-1 (Rev. 0)
p. A.31-2 (Rev. 15B)
p. A.32-1 (Rev. 11A)
p. A.33-1 (Rev. 15B)
p. A.33-2 (Rev. 12A)
p. A.34-1 (Rev. 0)
p. A.35-1 (Rev. 0)
p. A.36-1 (Rev. 17B)
p. A.37-1 (Rev. 0)
p. A.38-1 (Rev. 17B)
p. A.39-1 (Rev. 15B)
p. A.40-1 (Rev. 0)
p. A.41-1 (Rev. 0)
p. A.42-1 (Rev. 11C)
p. A.43-1 (Rev. 0)
p. A.44-1 (Rev. 0)
p. A.45-1 (Rev. 7)
p. A.45-2 (Rev. 7)
p. A.45-3 (Rev. 14D)
p. A.46-1 (Rev. 0)
p. A.47-1 (Rev. 4)
p. A.47-2 (Rev. 17A)
p. A.48-1 (Rev. 0)
p. A.48-2 (Rev. 0)
p. A.49-1 (Rev. 0)
p. A.50-1 (Rev. 0)
p. A.51-1 (Rev. 11C)
p. A.52-1 (Rev. 18A)
p. A.52-2 (Rev. 9B)
p. A.52-3 (Rev. 17A)
p. A.52-4 (Rev. 17A)
p. A.53-1 (Rev. 0)
p. A.54-1 (Rev. 0)
p. A.55-1 (Rev. 0)
p. A.56-1 (Rev. 14D)
p. A.57-1 (Rev. 0)
p. A.58-1 (Rev. 4)
p. A.59-1 (Rev. 0)
p. A.60-1 (Rev. 3)
p. A.61-1 (Rev. 3)
p. A.62-1 (Rev. 0)
p. A.62-2 (Rev. 0)
p. A.63-1 (Rev. 0)
p. A.64-1 (Rev. 15B)
p. A.65-1 (Rev. 0)
p. A.66-1 (Rev. 11C)
p. A.67-1 (Rev. 0)
p. A.68-1 (Rev. 2)
p. A.68-2 (Rev. 0)
p. A.68-3 (Rev. 0)
p. A.68-4 (Rev. 18A)
p. A.68-5 (Rev. 0)
p. A.68-6 (Rev. 18A)

p. A.68-7 (Rev. 0)
p. A.68-8 (Rev. 0)
p. A.69-1 (Rev. 0)
p. A.70-1 (Rev. 1)
p. A.71-1 (Rev. 0)
p. A.72-1 (Rev. 0)
p. A.73-1 (Rev. 0)
p. A.74-1 (Rev. 15B)
p. A.75-1 (Rev. 0)
p. A.76-1 (Rev. 0)
p. A.77-1 (Rev. 0)
p. A.78-1 (Rev. 18A)
p. A.78-2 (Rev. 18A)
p. A.79-1 (Rev. 0)
p. A.80-1 (Rev. 0)
p. A.81-1 (Rev. 0)
p. A.82-1 (Rev. 0)
p. A.83-1 (Rev. 0)
p. A.84-1 (Rev. 3)
p. A.85-1 (Rev. 3)
p. A.86-1 (Rev. 15B)
p. A.87-1 (Rev. 0)
p. A.88-1 (Rev. 0)
p. A.89-1 (Rev. 15B)
p. A.90-1 (Rev. 0)
p. A.94-1 (Rev. 3)
p. A.97-1 (Rev. 17A)
p. A.105-1 (Rev. 7)
p. A.116-1 (Rev. 2)
p. A.123-1 (Rev. 5)
p. A.143-1 (Rev. 1)
p. A.144-1 (Rev. 0)
p. A.146-1 (Rev. 1)
p. A.155-1 (Rev. 12C)

TABLE OF CONTENTS (CONTINUED)

15.4.10 Loss of Service Water System (Event 50)
15.4.11 Fire (Event 51)
15.4.12 Miscellaneous Releases Outside Containment (Event 52)
15.4.13 Instrument Line Break (Event 53)
15.4.14 Liquid Radwaste Tank Failure (Radiological Consequences) (Event 54)
15.4.15 Gaseous Radwaste Tank Failure (Event 55)
15.4.16 SBO (Event 56)

Supplement 15A DESIGN AGAINST HIGH-ENERGY PIPE BREAKS OUTSIDE THE PRIMARY CONTAINMENT

15A.1 Purpose
15A.2 Introduction
15A.3 General Design Evaluation
15A.4 Methods of Analysis and Assumptions

15A.4.1 Identification of High-Energy Fluid Systems
15A.4.2 High-Energy Piping System Failure Assumptions
15A.4.3 Jet Impingement and Pipe Whip Analysis
15A.4.4 Compartment Pressure-Temperature Analysis

15A.5 Detailed System Analyses

15A.5.1 Main Steam Line Break
15A.5.2 Feedwater Line Break
15A.5.3 HPCI Steam Line Break
15A.5.4 RCIC Steam Line Break
15A.5.5 RWC Line Break
15A.5.6 Moderate-Energy Line Cracks
15A.5.7 Radiological Considerations

15A.6 Summary of Plant Modifications

15A.6.1 Modifications as a Result of Pressure-Temperature
15A.6.2 Barriers Provided to Protect Against Jet Impingement

15A.7 Conclusions

Supplement 15A.A Response to NRC Question A & PCSB-1

15A.A.1 Background
15A.A.2 Additional High-Energy Lines Analyzed
15A.A.3 (deleted)
15A.A.4 Additional Moderate-Energy Lines Needed to be Analyzed

TABLE OF CONTENTS (CONTINUED)

Supplement 15C NUCLEAR SAFETY OPERATIONAL ANAYSIS (HNP-1 and HNP-2)

15C.1 Analytical Approach

15C.1.1 NSOA Objective
15C.1.2 NSOA Relationship to Safety Analysis

15C.2 Method of Analysis

15C.2.1 Operational Criteria
15C.2.2 Analysis Assumptions/Initial Conditions
15C.2.3 Required Actions
15C.2.4 Event Analysis Rules

15C.3 NSOA Results

15C.3.1 Event Evaluations and Diagrams
15C.3.2 Auxiliary System Evaluation and Diagrams
15C.3.3 Summary Matrices

15C.4 Event Evaluations

15C.4.1 Anticipated Operational Occurrences
15C.4.2 Accidents
15C.4.3 Special Events

LIST OF FIGURES (CONTINUED)

Figure No.	Figure Title
7.3-8	Room Temperature Detector Arrangment (HPCI/RCIC)
7.3-9	Typical Elbow Flow Sensing Arrangement
7.3-10	Typical High Exhaust Diaphragm Pressure Detection Arrangement (HPCI/RCIC)
7.3-11	Reactor Water Cleanup Break Detection by Differential Flow Measurement
7.3-12	High Ambient and High Differential Temperature Measurement (RWC)
7.3-13	Main Steam Line Isolation Valve Typical Isolation Control
7.3-14	Motor-Operated Valves Typical Isolation Control
7.3-15	Main Steam Line Isolation Valve Schematic Control Diagram
7.3-16	High Ambient and High Differential Temperature Measurement (Suppression Pool)
7.4-1	RCIC System FCD
7.4-2	SLCS FCD
7.4-3	LLS Relief Logic Diagram
7.4-4	LLS Logic for Channel A (Typical for Channels B, A, and D)
7.4-5	Channels A and C Indicators (Typical for Channels B and D)
7.5-1	Reactor Control Benchboard
7.5-2	Remote Shutdown Vertical Board
7.5-3	Remote Shutdown Auxiliary Panel
7.6-1	Detector Drive - Schematic
7.6-2	SRM and IRM Physical Arrangement
7.6-3	Neutron Monitoring System Detector Core Locations
7.6-4	Neutron Monitoring System Instrumentation Ranges
7.6-5	Neutron Monitoring System (FCD)
7.6-6	SRM Functional Block Diagram
7.6-7	IRM Functional Block Diagram
7.6-8	Power Range Monitor Physical Arrangement
7.6-9	Power Range Monitor Detector Assembly Location
7.6-10	Neutron Monitoring System (IED)
7.6-11	(Sheet 1) APRM/RBM Power Distribution
7.6-11	(Sheet 2) PRNM Logic Interface Block Diagram
7.6-11	(Sheet 3) APRM/RPS Interface Block Diagram
7.6-11	(Sheet 4) APRM/RBM Configuration Block Diagram
7.6-11	(Sheet 5) Flow Reference and RBM Instrumentation
7.6-12	(deleted)
7.6-13	(deleted)
7.6-14	(Sheet 1) LPRM to RBM Assignment Scheme
7.6-14	(Sheet 2) LPRM to RBM Assignment Scheme
7.6-15	Traversing Incore Probe Functional Block Diagram
7.6-16	Traversing Incore Probe Assembly
7.6-17	Control Rod Withdrawal Error Core Locations

LIST OF FIGURES (CONTINUED)

Figure No.	Figure Title
7.6-18	Control Rod Withdrawal Error Normalized Flux Distribution
7.6-19	Envelope of Maximum APRM Deviation by Flow Control Reduction in Power
7.6-20	Envelope of Maximum APRM Deviation for APRM Tracking With On-Limits Control Rod Withdrawal
7.6-21	RWC System FCD
7.6-22	Simplified Schematic of the SRV Position Indication System
7.6-23	Post Accident Reactor Coolant and Containment Atmosphere Sampling System P&ID
7.6-24	Post-Accident Sampling Chemical Analysis System P&ID
7.6-25	Typical RBM Channel Responses (No Failed LPRMs)
7.7-1	(sheet 1) Control Rod Drive Hydraulic System (FCD)
7.7-1	(sheet 2) Control Rod Drive Hydraulic System (FCD)
7.7-1	(sheet 3) Control Rod Drive Hydraulic System (FCD)
7.7-1	(sheet 4) Control Rod Drive Hydraulic System (FCD)
7.7-1	(sheet 5) Control Rod Drive Hydraulic System (FCD)
7.7-1	(sheet 6) Control Rod Drive Hydraulic System (FCD)
7.7-1	(sheet 7) (deleted)
7.7-1	(sheet 8) Control Rod Drive Hydraulic System (FCD)
7.7-1	(sheet 9) Control Rod Drive Hydraulic System (FCD)
7.7-2	Input Signals to Four Rod Display
7.7-3	Reactor Recirculation System (FCD)
7.7-4	Reactor Recirculation System - Flow Control Illustration
7.7-5	Feedwater Control System IED
7.7-6	Simplified Diagram of Turbine Pressure and Speed-Load Control System
7.8-1	Typical Trip Unit/Calibration System Elementary
7.9-1	Emergency Response Facilities/Safety Parameter Display System (ERF/SPDS) Block Diagram
8.2-1	Single-Line Diagram Plant Switchyard Connections
8.2-2	Georgia Power Company Generation, Transmission, and Primary Distribution System
8.2-3	Plant Switchyard and Transmission Line Connections
8.2-4	General Arrangement Plan Outdoor Switchyard
8.2-6	24-kV Switchyard Bus Support Structure
8.2-7	500-kV Reactor Switchyard Plan
8.3-1	4160-V Auxiliary Electrical Power System
8.3-2	600-V Auxiliary Electrical Power System
8.3-3	4160-V Essential Power System
8.3-4	125-250-V-dc Power System
8.3-5	125 V-dc Diesel Auxiliary Power System
8.3-6	24/48 V-dc Power System
8.3-7	Diesel Generator 1B Building 600-208-V Motor Control Centers

LIST OF FIGURES (CONTINUED)

Figure No.	Figure Title
8.2-5	Switchyard/Substation dc One-Line Diagrams (Typical)
8.3-8	4160-V and 600-V Essential Buses and Loads
8.3-9	ac Instrument Power Supply System
8.3-10	(Sheet 1 of 10) Schematic Diagram of Divisional Raceways
8.3-10	(Sheet 2 of 10) Plant Layout el 87 ft 0 in. Schematic Diagram of Divisional Raceways
8.3-10	(Sheet 3 of 10) Plant Layout el 130 ft 0 in. Schematic Diagram of Divisional Raceways
8.3-10	(Sheet 4 of 10) Plant Layout el 147 ft 0 in. Schematic Diagram of Divisional Raceways
8.3-10	(Sheet 5 of 10) Plant Layout el 158 ft 0 in. Schematic Diagram of Divisional Raceways
8.3-10	(Sheet 6 of 10) Plant Layout el 185 ft 0 in. Schematic Diagram of Divisional Raceways
8.3-10	(Sheet 7 of 10) Plant Layout el 203 ft 0 in. and 228 ft 0 in. Schematic Diagram of Divisional Raceways
8.3-10	(Sheet 8 of 10 Schematic Diagram of Divisional Raceways
8.3-10	(Sheet 9 of 10) Cable Spreading Room Tray Layout el 147 ft 0 in.
8.3-10	(Sheet 10 of 10) Cable Spreading Room Tray Layout/ Sections
8.3-11	(Sheet 1 of 8) Primary Containment Penetrations Layout
8.3-11	(Sheet 2 of 8) Primary Containment Penetrations Sections
8.3-11	(Sheet 3 of 8) Primary Containment Electrical Penetrations Layout/Sections
8.3-11	(Sheet 4 of 8) Primary Containment Electrical Penetrations Layout/Sections
8.3-11	(Sheet 5 of 8) Primary Containment Electrical Penetrations Layout/Sections
8.3-11	(Sheet 6 of 8) Primary Containment Electrical Penetrations Layout/Sections
8.3-11	(Sheet 7 of 8) Secondary Containment Penetrations Layout
8.3-11	(Sheet 8 of 8) Secondary Containment Penetrations Details
9.1-1	Fuel Storage - Arrangement
9.1-2	New Fuel Storage Rack - Outline
9.1-3	High-Density Fuel Storage Arrangement
9.1-4	(Sheet 1 of 3) High-Density Fuel Storage Module
9.1-4	(Sheet 2 of 3) Module Support System
9.1-4	(Sheet 3 of 3) Module Support System Detail
9.1-5	(deleted)
9.1-6	Fuel Pool Cooling System
9.1-7	Fuel Pool Cleanup System
9.1-8	Spent-Fuel Cask and Lift Yoke
9.1-9	(deleted)

LIST OF FIGURES (CONTINUED)

Figure No.	Figure Title
9.1-10	Plant Refueling Outage Flow Diagram
9.2-1	Plant Service Water Flow Diagram
9.2-2	Piping - Service Water at River Intake Structure (Unit 2)
9.2-3	Piping - Service Water at Intake Structure (Unit 1)
9.2-4	Traveling Water Screen at Intake Structure
9.2-5	Plant Service Water Pump Characteristics
9.2-6	Plant Service Water System P&ID
9.2-7	Reactor Building Closed Cooling Water System P&ID
9.2-8	Integrated Decay Heat Infinite Exposure and Irradiation Time
9.2-9	Decay Heat Rejection Rate
9.2-10	Auxiliary System Heat Rejection Rate
9.2-11	Integrated Auxiliary Heat Rejected
9.2-12	Sensible Heat Rejection Rate
9.2-13	Integrated Sensible Heat Rejected
9.2-14	Total Integrated Heat Rejected
9.2-15	Plant Service Water Pump Required NPSH Versus Flow
9.2-16	RHR Service Water Pump NPSH Required Versus Flow
9.2-17	Decay Heat Rejection Rate
9.2-18	Integrated Decay Heat
9.2-19	Total Integrated Heat Rejected
9.2-20	RHRSW System P&ID
9.2-21	Reactor and Radwaste Buildings Condensate Storage and Transfer System Diagram
9.2-22	RHR Service Water Pump Characteristics
9.2-23	Water Treatment System P&ID
9.3-1	(Sheet 1 of 7) Plant Services and Instrument Air System P&ID
9.3-1	(Sheets 2 of 7, 4 of 7, and 5 of 7) Noninterruptible Air System P&ID
9.3-1	(Sheet 3 of 7) (deleted)
9.3-1	(Sheet 6 of 7 and Sheet 7 of 7) Noninterruptible Air System
9.3-2	Leak Detection System P&ID
9.3-3	Control Building Drainage P&ID
9.3-4	Turbine Building Drainage Floor Drains
9.3-5	Radwaste Building Drainage
9.3-6	Radwaste Building Drainage
9.3-7	Drywell Pneumatic System P&ID
9.3-8	Torus Drainage and Purification System P&ID
9.3-9	Auxiliary Steam System P&ID
9.4-1	Control Room Ventilation System
9.4-2	Reactor Zone HVAC System P&ID
9.4-3	Safeguard Equip. Emergency Cooling System P&ID
9.4-4	Reactor Building Refueling Floor HVAC System P&ID
9.4-5	Radwaste Building HVAC System P&ID
9.4-6	Turbine Building HVAC System P&ID
9.4-7	Diesel Generator Building Ventilation System P&ID

LIST OF FIGURES (CONTINUED)

Figure No.	Figure Title
9.4-8	Diesel Generator Exhaust
9.4-9	Primary Containment (Drywell) HVAC System P&ID and PFD
9.4-10	Control Building Ventilation P&ID and PFD
9.4-11	Control Building - Computer, Water Analysis, and Cold Lab Rooms Air-Conditioning P&ID
9.4-12	Control Building - Radiochemistry Lab and Health Physics Area HVAC System P&ID
9.4-13	Waste Gas Treatment Building HVAC System P&ID
9.4-14	(deleted)
9.4-15	Technical Support Center HVAC (P&ID)
9.4-16	Reactor and Radwaste Buildings Chilled Water System P&ID and PFD
9.4-17	(Sheet 1 of 2) Primary Containment (Drywell) Chilled Water System P&ID
9.4-17	(Sheet 2 of 2) Primary Containment Chilled Water System P&ID & PFD
9.4-18	Control Room Shift Supervisor's Area HVAC P&ID & PFD
9.4-19	Control Building Ventilation P&ID
9.4-20	Control Building Chilled Water System P&ID and PFD
9.4-21	Control Building Chilled Water Cooling Units P&ID
9.4-22	River Intake Structure HVAC P&ID
9.5-1	Diesel Engine and Fuel Oil System P&ID
9.5-2	Fuel Oil Diesel Oil System P&ID
9.5-3	Intraplant Communication System Block Diagram
10.1-1	Turbine Building General Arrangement Turbine Deck el 164 ft 0 in.
10.1-2	Turbine Building General Arrangement el 147 ft 0 in.
10.1-3	Turbine Building General Arrangement el 130 ft 0 in.
10.1-4	Turbine Building General Arrangement el 120 ft 0 in.
10.1-5	Turbine Building General Arrangement Elevation View-Looking East
10.1-6	Turbine Building General Arrangement Elevation View-Looking South
10.2-1	Swing Angle and Gravity Parabola
10.2-2	Descriptive Coordinates for Turbine Missile Trajectories
10.2-3	Turbine Location With Respect to Other Buildings
10.2A-1	EHC Turbine Normal Overspeed Protection System
10.2A-2	EHC Turbine Emergency Overspeed Protection System
10.2A-3	EHC Turbine Additional Protection System
10.2A-4	EHC Turbine Overspeed Protection System
10.2A-5	Typical Arrangement of Steam Valves in Main and Extraction Line of Nuclear Turbine
10.3-1	Main Steam System P&ID
10.4-1	Main Condenser Gas Removal System P&ID
10.4-2	Circulating Water System P&ID
10.4-3	Condensate Polishing Demineralizer System P&ID
10.4-4	Condensate and Feedwater System P&ID

LIST OF FIGURES (CONTINUED)

Figure No.	Figure Title
10.4-5	Maximum Water Level on Station Battery Room With Circulating Water System Expansion Joint Failure
11.1-1	Noble Radiogas Decay Constant Exponent Frequency Histogram
11.1-2	Radiohalogen Decay Constant Exponent Frequency Histogram
11.1-3	Noble Radiogas Versus I-131 Leakage
11.2-1	Radwaste System P&ID
11.2-2	(deleted)
11.2-3	(deleted)
11.2-4	(deleted)
11.2-5	(deleted)
11.2-6	(deleted)
11.2-7	(deleted)
11.2-8	Radwaste Support Systems P&ID
11.2-9	Radwaste Building General Arrangement Plan at Floor el 103 ft 0 in.
11.2-10	Radwaste Building General Arrangement Plan at Floor el 132 ft 4 in.
11.2-11	Radwaste Building General Arrangement Plan at Floor el 148 ft 0 in. and 164 ft 0 in.
11.2-12	Radwaste Building General Arrangement Plan at Roof el 178 0 in. and View Looking South
11.2-13	Relative Location of Intake and Discharge Structures
11.3-1	Off-Gas System Flow Diagram
11.3-2	Waste Gas Treatment Building General Arrangement
11.3-3	Off-Gas System P&ID
11.4-1	Process Radiation Monitoring System Off-Gas and MSL Monitors
11.4-2	Process Radiation Monitoring System Liquid, Refueling Floor, and RB Ventstack Monitors
11.4-3	Process Radiation Monitoring System Filter Discharge, Carbon Vault, SGTS Drywell, and Torus, and Reactor Building Exhaust Monitors
11.4-4	Process Radiation Monitoring System Main Stack (Off-Gas Vent Pipe) Radiation Monitor
11.4-5	Unit 1 Fission Products Monitoring System P&ID
11.4-6	Unit 2 Fission Products Monitoring System P&ID
11.5-1	Radwaste System Flow Diagram
11.5-2	(deleted)
12.3-1	Shielding, Area Monitor Locations, and Access Control - el 87 ft and el 112 ft
12.3-2	Shielding, Area Monitor Locations, and Access Control - el 130 ft
12.3-3	Shielding, Area Monitor Locations, and Access Control - el 147 ft
12.3-4	Shielding, Area Monitor Locations, and Access Control - el 158 ft

LIST OF FIGURES (CONTINUED)

Figure No.	Figure Title
12.3-5	Shielding, Area Monitor Locations, and Access Control - el 185 ft
12.3-6	Shielding, Area Monitor Locations, and Access Control - el 205 ft
12.3-7	Shielding, Area Monitor Locations, and Access Control - el 228 ft
12.3-8	Shielding, Area Monitor Locations, and Access Control of Waste Gas Building
12.3-9	Shielding, Area Monitor Locations, and Access Control of Main Stack
12.3-10	Shielding and Access Control Control Building el 112 ft
12.3-11	Shielding and Access Control-Control Building el 130 ft
12.3-12	Shielding and Access Control-Control Building el 147 ft
12.3-13	Shielding and Access Control-Control Building el 164 ft
12.3-14	Reactor Building Exhaust Filter Train
12.3-15	Standby Gas Filter Train
12.3-16	(deleted)
12.3-17	Area Radiation Monitoring System - Schematic
12.3-18	Shielding and Access Control Technical Support Center
12.5-1	Location of Calibration Room
13.1-1	(deleted)
13.1-2	SNC Nuclear Operations Organization and HNP Technical Support Organization for HNP (Units 1 and 2)
13.1-3	SNC Technical Support Organization for HNP (Units 1 and 2)
13.1-4	Organization of Hatch Nuclear Plant (Units 1 and 2)
13.1-5	(deleted)
13.1-6	Minimum Control Room Manning (Units 1 and 2)
13.7-1	Security Organization for Plant Hatch
14.1-1	*Test Program Outline*
14.1-2	*Startup Testing - Open Vessel*
14.1-3	*Startup Testing Heatup - Part I*
14.1-4	*Startup Testing Heatup - Part II*
14.1-5	*Startup Testing Test Condition 1*
14.1-6	*Startup Testing Test Condition 2*
14.1-7	*Startup Testing Test Condition 3*
14.1-8	*Startup Testing Test Condition 4*
14.1-9	*Startup Testing Test Condition 5*
14.1-10	*Startup Testing Test Condition 6*
14.1-11	*Startup Testing Warranty Demonstration*
14.1-12	*Approximate Power Flow Map Showing Startup Test Conditions*

LIST OF FIGURES (CONTINUED)

Figure No.	Figure Title
15.1-1	Safety Analysis Methods (Typical)
15.1-2	Transient Analysis Methods (Typical)
15.1-3	Power-to-Flow Map
15.2-1	Inadvertent HPCI Injection Void Coefficient = - 12.0
15.2-2	Summary of Paths Available to Achieve Cold Shutdown
15.2-3	ADS/RHR/CS Cooling Loops
15.2-4	Activity C1 - Division I Failed
15.2-5	Activity C2 - Division II Failed
15.2-6	Load Rejection with No Bypass (LRNBP) (100P/100F)
15.2-7	Load Rejection with No Bypass (LRNBP) (100P/105F)
15.2-8	Turbine Trip with No Bypass (TTNBP) (100P/100F)
15.2-9	Turbine Trip with No Bypass (TTNBP) 100P/105F)
15.2-10	Turbine Trip with Bypass (TTBP) Void Coefficient = - 12.0
15.2-11	Closure of All MSIVs (MSIVD), Trip Scram Void Coefficient = - 12.0
15.2-12	Trip of Both Recirculation Pumps Void Coefficient = - 12.0
15.2-13	CRD, EOC 1 Scram Curve and Scram Curve Used in Analysis
15.2-14	Recirculation Failure - Increasing Flow, Void Coefficient = - 12.0
15.2-15	Startup of Idle Recirculation Loop Void Coefficient = - 12.0
15.2-16	Point Kinetics Control Rod Reactivity Insertion (Modified to Include Scram Reactivity)
15.2-17	Global Peaking Factor vs Rod Worth from NEDO-10527 and Detailed Analysis
15.2-18	Continuous Rod Withdrawal in the Startup Range, Core Average Power vs Time (Point Model Kinetics)
15.2-19	Continuous Rod Withdrawal From Hot Startup, Core Average Power vs Time
15.2-20	Feedwater Controller Failure (FWCF) (100P/100F)
15.2-21	Feedwater Controller Failure (FWCF) (100P/105F)
15.2-22	Pressure Regulator Failure - Open Void Coefficient = - 12.0
15.2-23	Loss of Auxiliary Power (Transformer) Void Coefficient = - 12.0
15.2-24	Loss of Auxiliary Power (All Grid) Void Coefficient = - 12.0
15.2.25	Loss of Feedwater Flow (LOFW) Vessel Downcomer Water Level
15.2-26	Loss of Feedwater (LOFW) Vessel Pressure
15A-1	MSLB Accident - Mass of Coolant Loss Through Break With 5-s MSIV Closing Time
15A-2	Location of Main Control Room With Respect to Main Lines (Looking East)

LIST OF FIGURES (CONTINUED)

Figure No.	Figure Title
15A-3	Main Steam and Feedwater Lines in Main Steam Pipe Chase, Reactor Building, Elevation View Looking South
15A-4	Main Steam and Feedwater Lines, Main Steam Pipe Chase - Reactor Building - Plan View
15A-5	(Sheet 1 of 2) Reactor Feedpump Discharge Turbine Building
15A-5	(Sheet 2 of 2) Main Steam and Feedwater Lines Turbine Building
15A-6	Main Steam Line Isometric Diagram, Reactor and Turbine Buildings
15A-7	HPCI Steam and RHR Lines, Pipe Penetration Room, Reactor Building el 130 ft - Plan View
15A-8	HPCI Steam Line and Plant Service Water Lines - Torus Room, Reactor Building - Plan View
15A-9	RHR Lines, Torus and East Corner Rooms - Reactor Bldg Below el 130 ft Plan View
15A-10	RCIC Steam Line and Plant Service Water, Northwest Corner Room, Reactor Building, Below el 130 ft - Plan View
15A-11	RWC - Reactor Building el 158 ft Plan View
15A-12	Auxiliary Steam System Piping Arrangement
15A-13	RHR and Plant Service Water Piping Intake Structure
15A-14	Main Steam and Feedwater Anchor Frame Details Main Steam Pipe Chase
15A-15	Flow Model - MSLB in Pipe Chase Room
15A-16	Flow Model - HPCI Steam Line Break in Torus Room
15A-17	Flow Model - HPCI Steam Line Break in Pipe Penetration Room
15A-18	Flow Model - RWCU Line Break in Pump Room - Reactor Building
15A-19	Vent Room el 164 ft and Vent Area Addition From Main Steam Pipe Chase to Vent Room to Turbine Building - Reactor Building
15A-20	Vent Area Addition to Turbine Building From Main Steam Pipe Chase, Reactor Building
15A-21	Vent Area From Pipe Penetration Room, Reactor Building Floor el 130 ft, to Torus Room
15A-22	Vent Area Restrictors Around Drywell Penetrations
15A-23	Feedwater From Reactor Feed Pump Discharge to Pipe Chase Anchor Piping Isometric
15A-24	HPCI Steam Supply to Turbine and RHR Heat Exchangers-Piping Isometric
15A-25	RCIC Steam Supply to Turbine Piping Isometric
15A-26	(Sheet 1 of 2) RWC From Reactor Recirculation Loop to Nonregenerative Heat Exchanger-Piping Isometric
15A-26	(Sheet 2 of 2) RWC From Regenerative Heat Exchanger to Feedwater Line-Piping Isometric

LIST OF FIGURES (CONTINUED)

Figure No.	Figure Title
15A-27	RCIC Pump Discharge to Feedwater-Piping Isometric
15A-28	Stress Summary and Breakpoint Locations
15A-29	(deleted)
15C-1	NSOA Relationship to Safety Analysis and Design Process
15C-2	Event Diagram Format
15C-3	Auxiliary System Diagram Format
15C-4	Loss of Feedwater Heating Event Diagram
15C-5	Inadvertent Start of HPCI Pump Event Diagram
15C-6	Shutdown Cooling (RHR) Malfunction - Decreasing Temperature Event Diagram
15C-7	Loss of RHR Shutdown Cooling Event Diagram
15C-8	Generator Load Rejection with No Bypass Event Diagram
15C-9	Generator Load Rejection with Bypass Event Diagram
15C-10	Turbine Trip with No Bypass Event Diagram
15C-11	Loss of Condenser Vaccuum Event Diagram
15C-12	Turbine Trip with Bypass Event Diagram
15C-13	Closure of All MSIVs Event Diagram
15C-14	Closure of One MSIV Event Diagram
15C-15	Pressure Regulator failure - Closed Event Diagram
15C-16	Trip of One Recirculation Pump Event Diagram
15C-17	Trip of Two Recirculation Pumps Event Diagram
15C-18	Recirculation Flow Controller Failure - Decreasing Flow Event Diagram
15C-19	Recirculation Flow Controller Failure - Increasing Flow Event Diagram
15C-20	Startup of Idle Recirculation Pump Event Diagram
15C-21	Control Rod Withdrawal Error Event Diagram
15C-22	Control Rod Removal Error During Refueling Event Diagram
15C-23	Fuel Assembly Insertion Error During Refueling Event Diagram
15C-24	Feedwater Controller Failure - Maximum Demand Event Diagram
15C-25	Inadvertent Opening of an SRV Event Diagram
15C-26	Pressure Regulator Failure - Open Event Diagram
15C-27	Loss of Auxiliary Power Event Diagram
15C-28	Loss of Feedwater Flow Event Diagram
15C-29	Control Rod Drop Accident Event Diagram
15C-30	Loss of Coolant Accident Event Diagram
15C-31	Main Steam Line Break Accident Event Diagram
15C-32	Fuel-Handling Accident Event Diagram
15C-33	Fuel Assembly Loading Error Event Diagram
15C-34	Recirculation Pump Seizure Event Diagram
15C-35	Feedwater Line Break Event Diagram

LIST OF FIGURES (CONTINUED)

Figure No.	Figure Title
15C-36	Stability Event Diagram
15C-37	Overpressure Protection Event Diagram
15C-38	Shutdown Without Control Rod Insertion (SLCS Capability) Event Diagram
15C-39	MCR Uninhabitability Event Diagram
15C-40	Anticipated Transient Without Scram Event Diagram
15C-41	Generator Load Rejection with Flux Scram and No Bypass or RPT Event Diagram
15C-42	Turbine Trip with Flux Scram and No Bypass or RPT Event Diagram
15C-43	Loss of One dc System Event Diagram
15C-44	Loss of Instrument Air Event Diagram
15C-45	Loss of Service Water System Event Diagram
15C-46	Fire Event Diagram
15C-47	Miscellaneous Small Releases Outside Containment Event Diagram
15C-48	Instrument Line Break Event Diagram
15C-49	Liquid Radwaste Tank Failure Event Diagram
15C-50	Gaseous Radwaste Tank Failure Event Diagram
15C-51	Station Blackout Event Diagram
15C-52	Auxiliary Systems for Front-Line System
15C-53	Auxiliary Systems for Other Auxiliary Systems
17.1-1	(deleted)
17.2-1	Quality Assurance Organization

3.4 WATER LEVEL (FLOOD) DESIGN (Units 1 and 2)

Seismic Category I structures and components are designed for the protection of safety-related equipment from external flooding. The design maximum flood elevations used in the design of each Seismic Category I structure are described in subsection 2.4.3 and are as follows:

- Primary containment - el 105 ft
- Reactor building - el 105 ft
- Diesel generator building - el 105 ft
- Control building - el 105 ft
- Intake structure - el 105 ft
- Main stack - el 105 ft

Since all Category I structures except the intake structure are not affected by the maximum flood level of the Altamaha River, the design basis for bouyancy and static-water force effects is the ground water level at el 122 ft msl. For the intake structure the maximum water level considered was 105 ft.

3.4.1 FLOOD PROTECTION

All Seismic Category I systems and components located below flood level are protected by watertight Seismic Category I structures designed to withstand the flood condition.[1]

A. There are no safety-related systems or components located below the design maximum flood elevation of 105 ft that are not protected against flood. When safety-related equipment is located in subgrade levels of Seismic Category I structures, the equipment is protected from the effects of ground water and natural flooding levels by the design of the structures.

   The grade elevations for the Seismic Category I structures are as follows:

   - Reactor building 129 ft
   - Diesel generator building 129 ft
   - Control building 129 ft

- Intake structure 110 ft
- Main stack 120 ft

All exterior entrances are at or above the grade level for these structures. Therefore, flood protection for the entrances is not required. A list of exterior entrances is found in table 3.4-1.

Safety-related equipment is protected from the effects of ground water level by sealing each below-grade penetration with an appropriate seal. Seal designs used are shown in figure 3.4-2.

B. Structures described above housing safety-related equipment do not have exterior or access openings and penetrations below the design flood levels. Access to these structures is possible only from above grade level, which is el 129 ft.

C. Such means as pumping systems, stoplogs, watertight doors, and drainage systems for flood protection are not required because access openings and penetrations are not provided below the design flood levels. Drains and sumps of adequate sizes are provided in all Seismic Category I structures and components to cope with potential inleakage from such phenomena as cracks in structure walls and leaking waterstops.

The wave crest at maximum discharge in the Altamaha River is calculated to reach an elevation of 108.3 ft. The wave runup may splash water onto the roadfill around the intake structure which is at el 110 ft and eventually leak into the building. Floor drains in the intake structure building are designed to handle such an inleakage.

3.4.2 ANALYSIS PROCEDURES

The foundation slabs and exterior walls of safety-related structures are designed to resist upward and lateral pressures caused by the maximum flood level given in the preceding paragraph.

The hydrostatic pressure acting uniformly at the bottom of the structure is the product of the height to the design flood level and the water weight taken as 63 lb/ft^3 (figure 3.4-1). The horizontal pressure acting on the exterior walls varies with height, from maximum value at the bottom of the wall to zero value at the design flood level (figure 3.4-1).

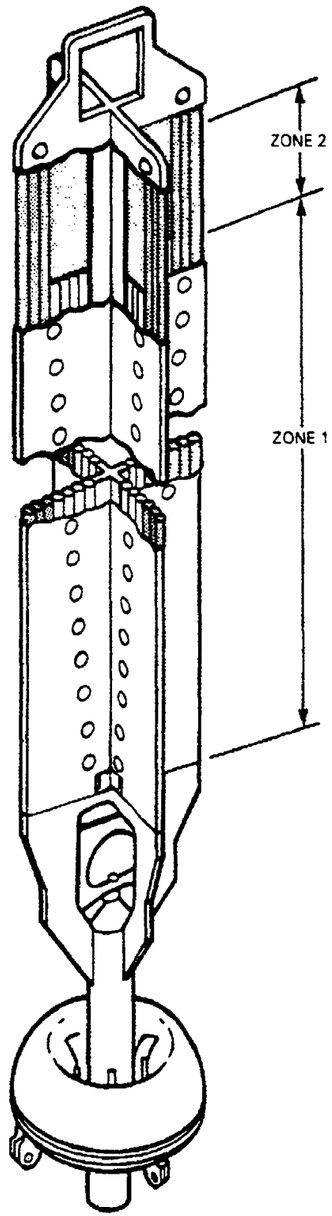

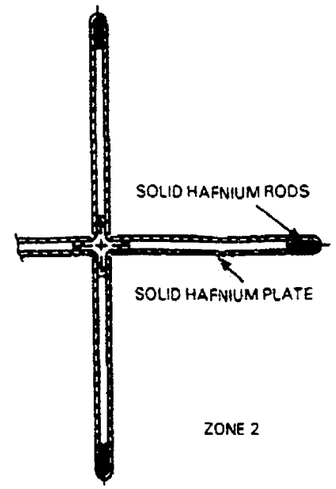

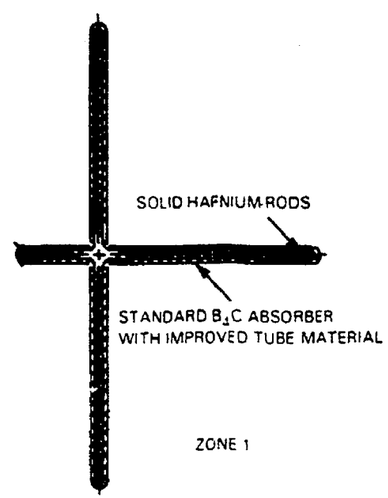

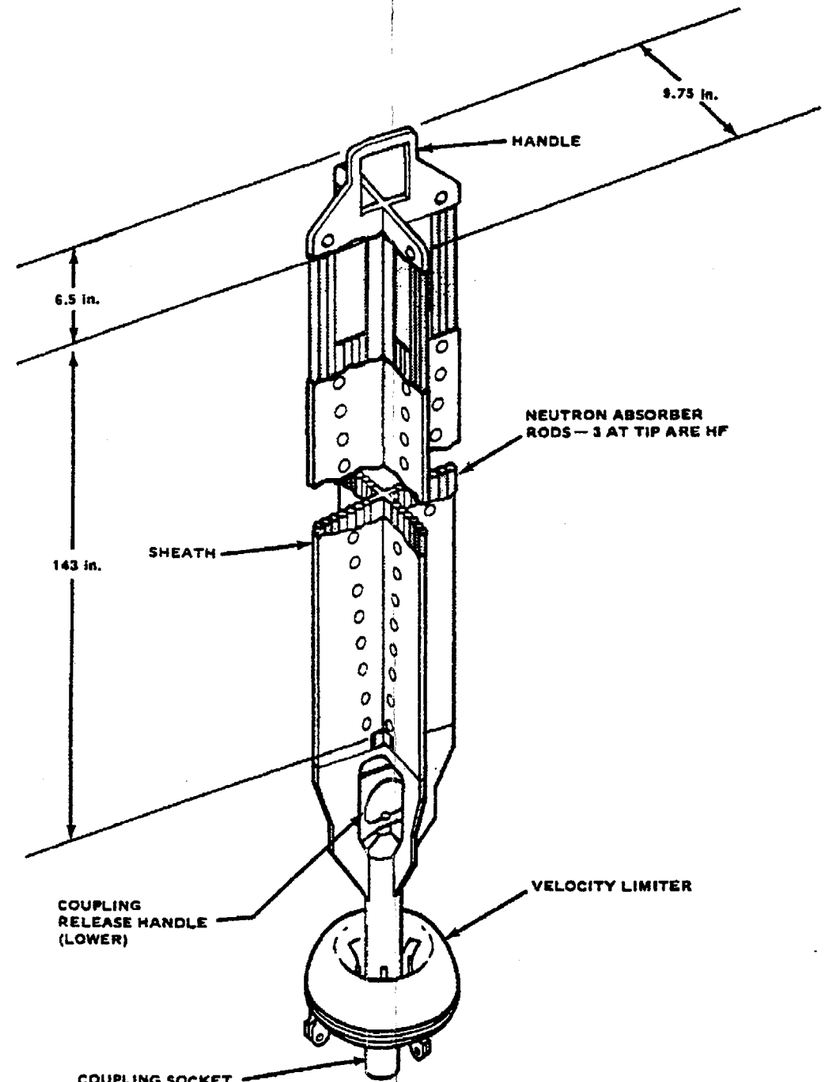

REV 18B 03/00

Southern Nuclear EDWIN I. HATCH NUCLEAR PLANT UNITS 1&2

DURA LIFE D-190
CONTROL ROD ASSEMBLY

FIGURE 4.2-6

ACAD 040206

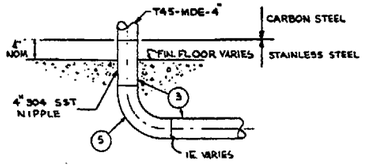

DETAIL 1
NO SCALE
CLOSED DRAINS ONLY
3 REQ'D - DRW
8 REQ'D - CRW

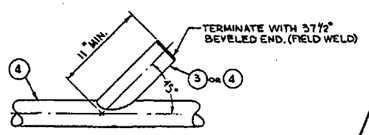

DETAIL 2
NO SCALE
TYPICAL BRANCH STUB-IN

PEDESTAL WALL PENETRATIONS				
	ϕ INNER	ϕ OUTER	AZIMUTH	OFFSET	SLEEVE DIA.
M-1	112'-4½"	112'-3⅝"	250°	—	8"
M-2	112'-7⅝"	112'-8⅝"	250°	-5'-0"	6"
M-3	113'-4⅝"	113'-5⅝"	205°	-1'-7½"	6"
M-4	112'-7⅝"	112'-8⅝"	160°	+4'-0"	8"
M-5	113'-3⅝"	113'-4⅝"	160°	-4'-0"	6"
M-6	113'-3⅝"	113'-4⅝"	115°	+11"	6"
M-7	112'-4½"	112'-3⅝"	70°	—	8"
M-8	113'-3⅝"	113'-4⅝"	25°	-1'-5"	6"
M-9	112'-8⅝"	112'-9⅝"	25°	+10"	8"
M-10	113'-3⅝"	113'-4⅝"	340°	+ 2'-0"	6"
M-11	112'-6⅝"	112'-7⅝"	340°	- 4'-10"	6"
M-12	113'-4⅝"	113'-5"	295°	—	6"

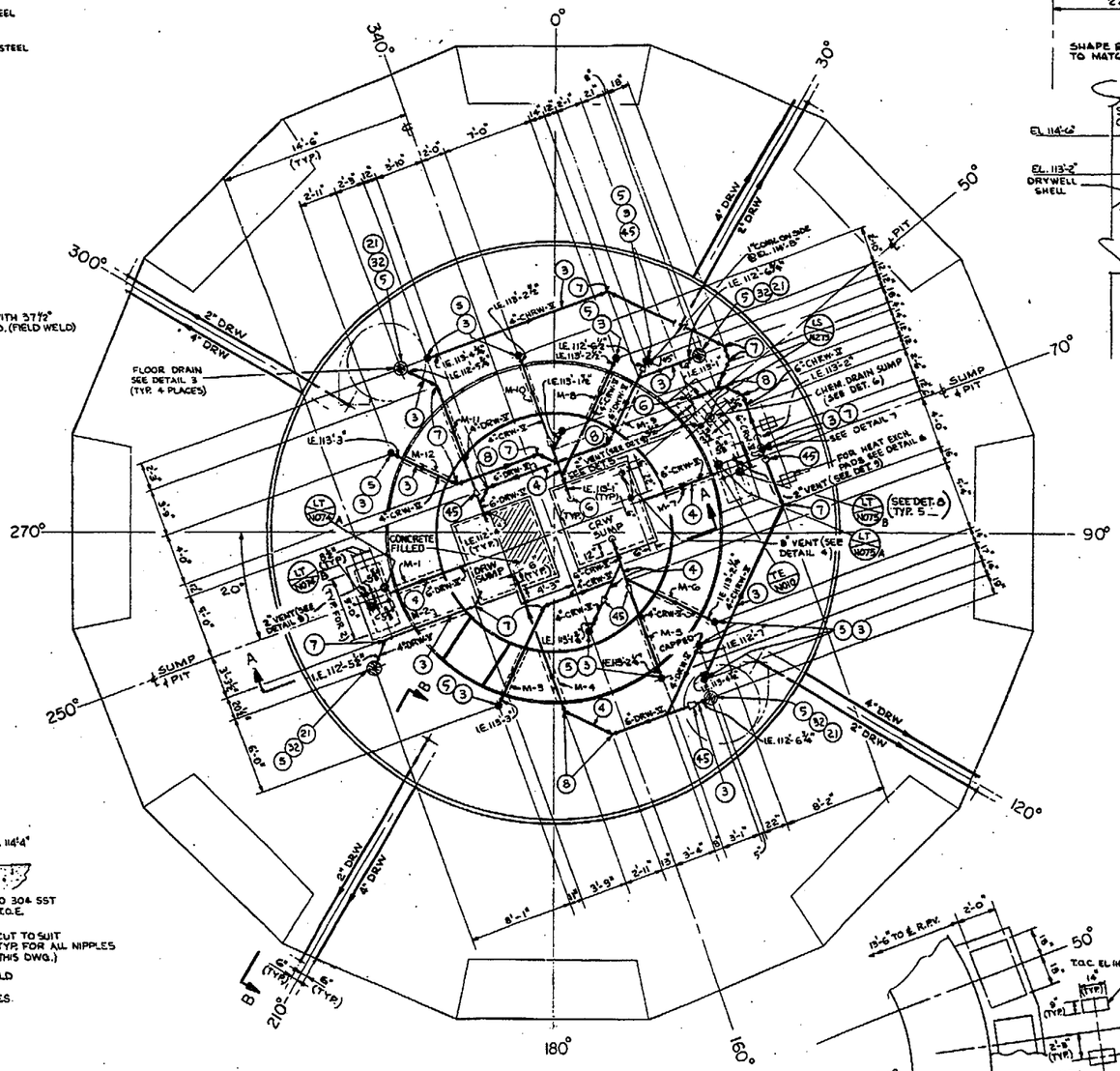

PLAN VIEW
SCALE: 1/4"=1'-0"

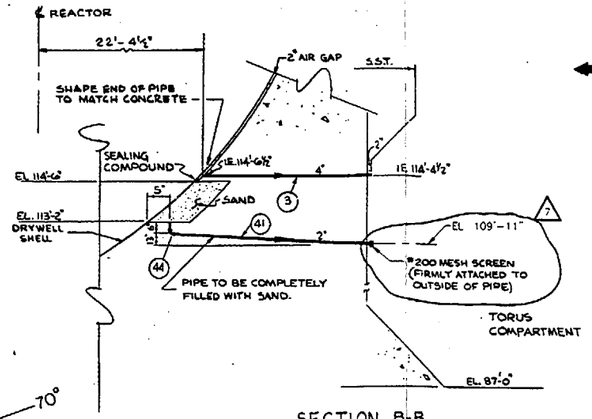

SECTION B-B
SCALE: NONE
TYPICAL 4 PLACES

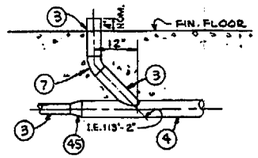

DETAIL 7
NO SCALE

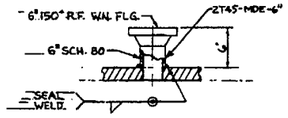

DETAIL 8
NO SCALE

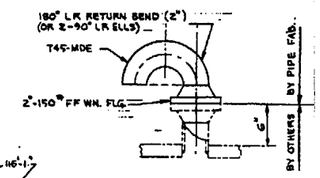

DETAIL 9
VENT
NO SCALE

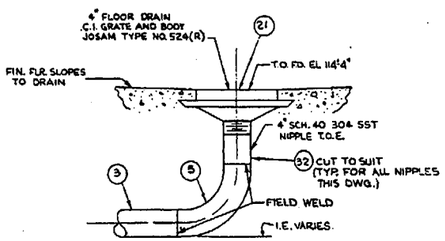

DETAIL 3
NO SCALE
DRYWELL FLOOR DRAIN ASSY ONLY

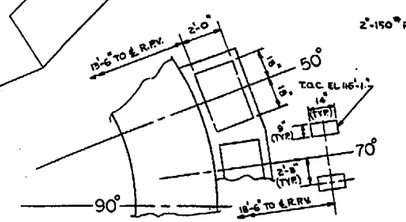

DETAIL 6
CHEMICAL DRAIN SUMP
NO SCALE

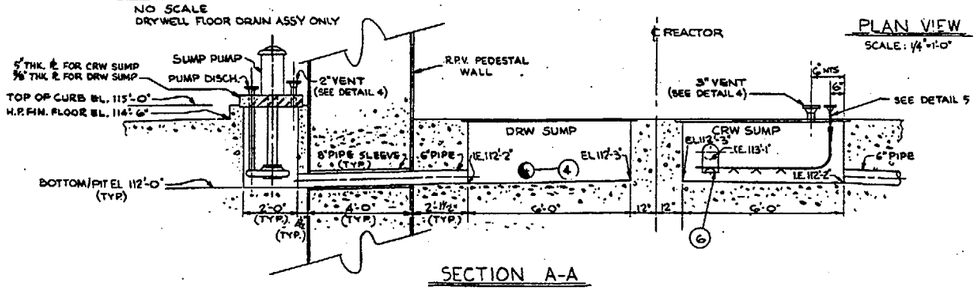

SECTION A-A
SCALE: 1/2"=1'-0"

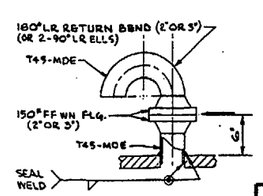

DETAIL 4
VENT
NO SCALE

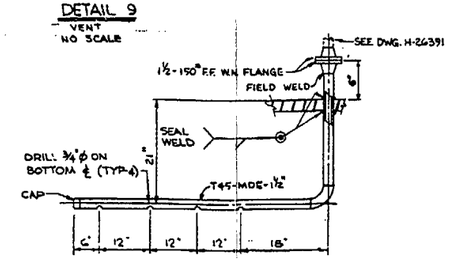

DETAIL 5
HEAT EXCHANGER RETURN SPARGER
NO SCALE

NOTES:
1. ALL DRAINAGE LINES 4" & LARGER SHALL HAVE A MINIMUM UNIFORM SLOPE OF ⅛" PER FOOT.
2. TOP OF ALL FLOOR DRAINS EL. 114'-4".
3. ROMAN NUMERAL SHOWN WITH LINE NUMBER INDICATES THE RADIATION ZONE BEING SERVED BY THAT LINE. ZONE X > 100 MR/HR.
4. MINOR INTERFERENCES BETWEEN DRAIN LINES AND STRUCTURAL REINFORCING MAY BE RESOLVED BY MOVING BARS UP TO 3½" EITHER WAY.
5. ALL EMBEDDED PIPING AND FITTINGS DESIGNATED BY MARK NUMBERS ARE FURNISHED BY GEORGIA POWER COMPANY. ALL OTHER PIPING AND FITTINGS ARE FURNISHED BY THE PIPING CONTRACTOR.
6. ALL LOCATING DIM'S. ROUNDED-OFF TO NEAREST ½". ALL INVERT ELEV'S. ROUNDED-OFF TO NEAREST ¼".

REFERENCE DWGS:
H-26026 -- RADWASTE SYSTEM P&ID SHT. 1 OF 7. M.P.L. NO. 2G11-1010.
BM 26184 -- REACTOR & RADWASTE BLDGS EMBEDDED FLOOR & EQUIPMENT DRAINAGE SYSTEM.
H-26290 -- EQUIPMENT DRAINAGE IN DRYWELL.
H-26391 -- REACTOR BLDG & DRYWELL SUMP DISCH. PIPING.
H-25653 -- R.P.V. FOUNDATION CONCRETE PEDESTAL BASE NEAT LINES.
H-25655 -- R.P.V. FOUNDATION CONCRETE REINFORCING PLANS, SECTIONS & DETAILS.

LEGEND:
● - DRAIN STUB-UP, SEE DETAIL 1.
O - FLOOR DRAIN (F.D.), SEE DETAIL 3.
CRW - CLEAN RADIOACTIVE WASTE
DRW - DIRTY RADIOACTIVE WASTE
CHRW - CHEMICAL (ACID) RADIOACTIVE WASTE
I.E. - INVERT ELEVATION

REV 18B 03/00
H-26202 REV.7

ACAD 2050205

Southern Nuclear
EDWIN I. HATCH NUCLEAR PLANT—UNIT 2

ARRANGEMENT OF DRYWELL SUMPS AND LEAK DETECTION IN INSTRUMENTATION

FIGURE 5.2-5

temperature is the same as at the end of blowdown for a DBA because essentially the same amount of primary system energy is released during the blowdown. After reactor depressurization, the flow through the break changes to suppression pool water that is being injected into the RPV by the ECCS. This flow condenses the drywell steam and eventually causes the drywell and containment pressures to equalize in the same manner as following a recirculation line rupture.

The subsequent long-term suppression pool and containment heatup transient that follows is essentially the same as for the recirculation break.

From this description, it can be concluded that the consequences of an intermediate break are less severe than a recirculation line rupture.

6.2.1.4.5 Small Breaks

This paragraph discusses the containment transient associated with small primary system blowdowns. The sizes of primary system blowdowns in this category are those blowdowns that do not result in reactor depressurization due to either the loss of reactor fluid or the automatic operation of the ECCS equipment. The underlying assumption is that, following the manifestation of a break of this size, the reactor operators initiate an orderly shutdown and depressurization of the plant.

The thermodynamic process associated with the blowdown of primary system fluid is one of constant enthalpy. If the primary system break is below the water level, the blowdown flow consists of reactor water. Upon depressurizing from reactor pressure to the drywell pressure, approximately one-third of this water flashes to steam and two-thirds remain as liquid. Both phases are at saturated conditions corresponding to the drywell pressure. Thus, if the drywell is at atmospheric pressure, the steam and liquid associated with a liquid blowdown are at 212°F. Similarly, if the containment is assumed to be at its maximum allowable pressure, the reactor liquid blows down to approximately 309°F steam and water.

If the primary system rupture is located so that the blowdown flow consists of reactor steam, the resultant steam temperature in the containment is significantly higher than the temperature associated with liquid blowdown. This is because a constant enthalpy decompression of high pressure saturated steam results in a superheat condition. For example, decompression of 1000 psia steam to atmospheric pressure results in 298°F superheated steam (86°F of superheat).

The conclusion is that a small reactor steam leak imposes the most severe temperature conditions on the drywell structures and the safety equipment in the drywell. The superheat temperature for large steam-only blowdowns is the same as for small breaks, but the duration of the high-temperature condition is less. This is because the larger breaks depressurize the reactor more rapidly than the orderly reactor shutdown that is assumed to terminate the small break.

For drywell design evaluation, the following sequence of events was assumed to occur. With the reactor and containment operating at the maximum normal conditions defined in table 6.2-1, a small break occurs that allows blowdown of reactor steam to the drywell.

The resulting pressure increase in the drywell leads to a high drywell pressure signal that scrams the reactor and activates the containment isolation system. The drywell pressure continues to increase at a rate dependent upon the size of the assumed steam leak. This pressure increase depresses the water level in the vents until the level reaches the bottom of the vents. At this time, air and steam start to enter the suppression pool. The steam is condensed and the air passes to the suppression chamber free space. The latter results in a gradual pressurization of the containment at a rate dependent upon the air carryover rate. Eventually, the entrainment of the drywell air in the steam flow through the vents results in all the drywell air being carried over to the suppression chamber. At this time, pressurization of the containment ceases and the system reaches an equilibrium condition with the drywell pressure at 25 psig and the suppression chamber at approximately 23 psig. The drywell is full of superheated steam. Continued blowdown of reactor steam is condensed in the pool.

The reactor operators are alerted to the incident by the high drywell pressure signal and the reactor scram. For the purposes of evaluating the duration of the superheat condition in the drywell, it is assumed that their response is to shut down the reactor in an orderly manner using the main condenser and limiting the reactor cooldown rate to 100°F/h. This results in the reactor primary system being depressurized within 6 h. At this time, the blowdown flow to the drywell ceases and the superheat condition is terminated. If the plant operators elect to cool down and depressurize the reactor primary system more rapidly than at 100°F/h, the drywell superheat condition is shorter.

The temperature resulting from the blowdown is determined by finding the combination of primary system pressure and containment pressure that produces the maximum superheat

TABLE OF CONTENTS (CONTINUED)

7.4 Systems Required for Safe Shutdown

7.4.1 Reactor Core Isolation Cooling (RCIC) System

7.4.1.1 Design Bases
7.4.1.2 System Description
7.4.1.3 Analysis

7.4.2 Standby Liquid Control System (SLCS)

7.4.2.1 Design Bases
7.4.2.2 System Description
7.4.2.3 Analysis

7.4.3 Reactor Shutdown Cooling System

7.4.3.1 Design Bases
7.4.3.2 System Description
7.4.3.3 Analysis

7.4.4 Low-Low Set Relief Logic System

7.4.4.1 Design Bases
7.4.4.2 System Description
7.4.4.3 Analysis

7.4.5 Residual Heat Removal Service Water (RHRSW)

7.4.5.1 Design Basis
7.4.5.2 System Description
7.4.5.3 Analysis

7.5 Safety-Related and Power Generation Display Instrumentation

7.5.1 Description

7.5.1.1 Normal Operation
7.5.1.2 Anticipated Operational Occurrences (AOOs)
7.5.1.3 Accidents
7.5.1.4 Special Event - MCR Uninhabitability

7.5.2 Analysis

7.5.2.1 Normal Operation
7.5.2.2 AOOs
7.5.2.3 Accidents

TABLE OF CONTENTS (CONTINUED)

7.5.2.4 Special Event - Shutdown from Outside the MCR

7.5.3 Information Systems Important to Safety

7.5.3.1 Introduction
7.5.3.2 Description of Information Systems
7.5.3.3 Variable Types
7.5.3.4 Variable Categories
7.5.3.5 Description of Variables (HNP Specific)

7.6 Other Systems Required for Safety and Power Generation

7.6.1 Refueling Interlocks

7.6.1.1 Design Bases
7.6.1.2 System Description
7.6.1.3 Analysis

7.6.2 Neutron Monitoring System

7.6.2.1 Design Basis
7.6.2.2 System Description
7.6.2.3 Analysis

7.6.3 Essential Process Radiation Monitors

7.6.3.1 Main Steam Line Radiation Monitor
7.6.3.2 Reactor Building Ventilation Exhaust Radiation Monitoring System
7.6.3.3 Refueling Floor Ventilation Exhaust Radiation Monitor System

7.6.4 Primary Containment Atmosphere Monitors

7.6.4.1 Fission Products Monitor
7.6.4.2 Drywell and Torus Gamma Radiation Monitor
7.6.4.3 Hydrogen/Oxygen Analyzer
7.6.4.4 Primary Containment Temperature Monitors
7.6.4.5 Primary Containment Pressure Monitor
7.6.4.6 Torus Water Level Indicator System

7.6.5 (deleted)

7.6.6 Reactor Water Cleanup System

7.6.6.1 Design Basis

LIST OF FIGURES (CONTINUED)

Figure No.	Figure Title
7.4-1	RCIC System FCD
7.4-2	SLCS FCD
7.4-3	LLS Relief Logic Diagram
7.4-4	LLS Logic for Channel A (Typical for Channels B, A, and D)
7.4-5	Channels A and C Indicators (Typical for Channels B and D)
7.5-1	Reactor Control Benchboard
7.5-2	Remote Shutdown Vertical Board
7.5-3	Remote Shutdown Auxiliary Panel
7.6-1	Detector Drive - Schematic
7.6-2	SRM and IRM Physical Arrangement
7.6-3	Neutron Monitoring System Detector Core Locations
7.6-4	Neutron Monitoring System Instrumentation Ranges
7.6-5	Neutron Monitoring System (FCD)
7.6-6	SRM Functional Block Diagram
7.6-7	IRM Functional Block Diagram
7.6-8	Power Range Monitor Physical Arrangement
7.6-9	Power Range Monitor Detector Assembly Location
7.6-10	Neutron Monitoring System (IED)
7.6-11	(Sheet 1) APRM/RBM Power Distribution
7.6-11	(Sheet 2) PRNM Logic Interface Block Diagram
7.6-11	(Sheet 3) APRM/RPS Interface Block Diagram
7.6-11	(Sheet 4) APRM/RBM Configuration Block Diagram
7.6-11	(Sheet 5) Flow Reference and RBM Instrumentation
7.6-12	(deleted)
7.6-13	(deleted)
7.6-14	(Sheet 1) LPRM to RBM Assignment Scheme
7.6-14	(Sheet 2) LPRM to RBM Assignment Scheme
7.6-15	Traversing Incore Probe Functional Block Diagram
7.6-16	Traversing Incore Probe Assembly
7.6-17	Control Rod Withdrawal Error Core Locations
7.6-18	Control Rod Withdrawal Error Normalized Flux Distribution
7.6-19	Envelope of Maximum APRM Deviation by Flow Control Reduction in Power
7.6-20	Envelope of Maximum APRM Deviation for APRM Tracking With On-Limits Control Rod Withdrawal
7.6-21	RWC System FCD
7.6-22	Simplified Schematic of the SRV Position Indication System
7.6-23	Post Accident Reactor Coolant and Containment Atmosphere Sampling System P&ID
7.6-24	Post-Accident Sampling Chemical Analysis System P&ID
7.6-25	Typical RBM Channel Responses (No Failed LPRMs)

LIST OF FIGURES (CONTINUED)

Figure No.	Figure Title
7.7-1	(sheet 1) Control Rod Drive Hydraulic System (FCD)
7.7-1	(sheet 2) Control Rod Drive Hydraulic System (FCD)
7.7-1	(sheet 3) Control Rod Drive Hydraulic System (FCD)
7.7-1	(sheet 4) Control Rod Drive Hydraulic System (FCD)
7.7-1	(sheet 5) Control Rod Drive Hydraulic System (FCD)
7.7-1	(sheet 6) Control Rod Drive Hydraulic System (FCD)
7.7-1	(sheet 7) (deleted)
7.7-1	(sheet 8) Control Rod Drive Hydraulic System (FCD)
7.7-1	(sheet 9) Control Rod Drive Hydraulic System (FCD)
7.7-2	Input Signals to Four Rod Display
7.7-3	Reactor Recirculation System (FCD)
7.7-4	Reactor Recirculation System - Flow Control Illustration
7.7-5	Feedwater Control System IED
7.7-6	Simplified Diagram of Turbine Pressure and Speed-Load Control System
7.8-1	Typical Trip Unit/Calibration System Elementary
7.9-1	Emergency Response Facilities/Safety Parameter Display System (ERF/SPDS) Block Diagram

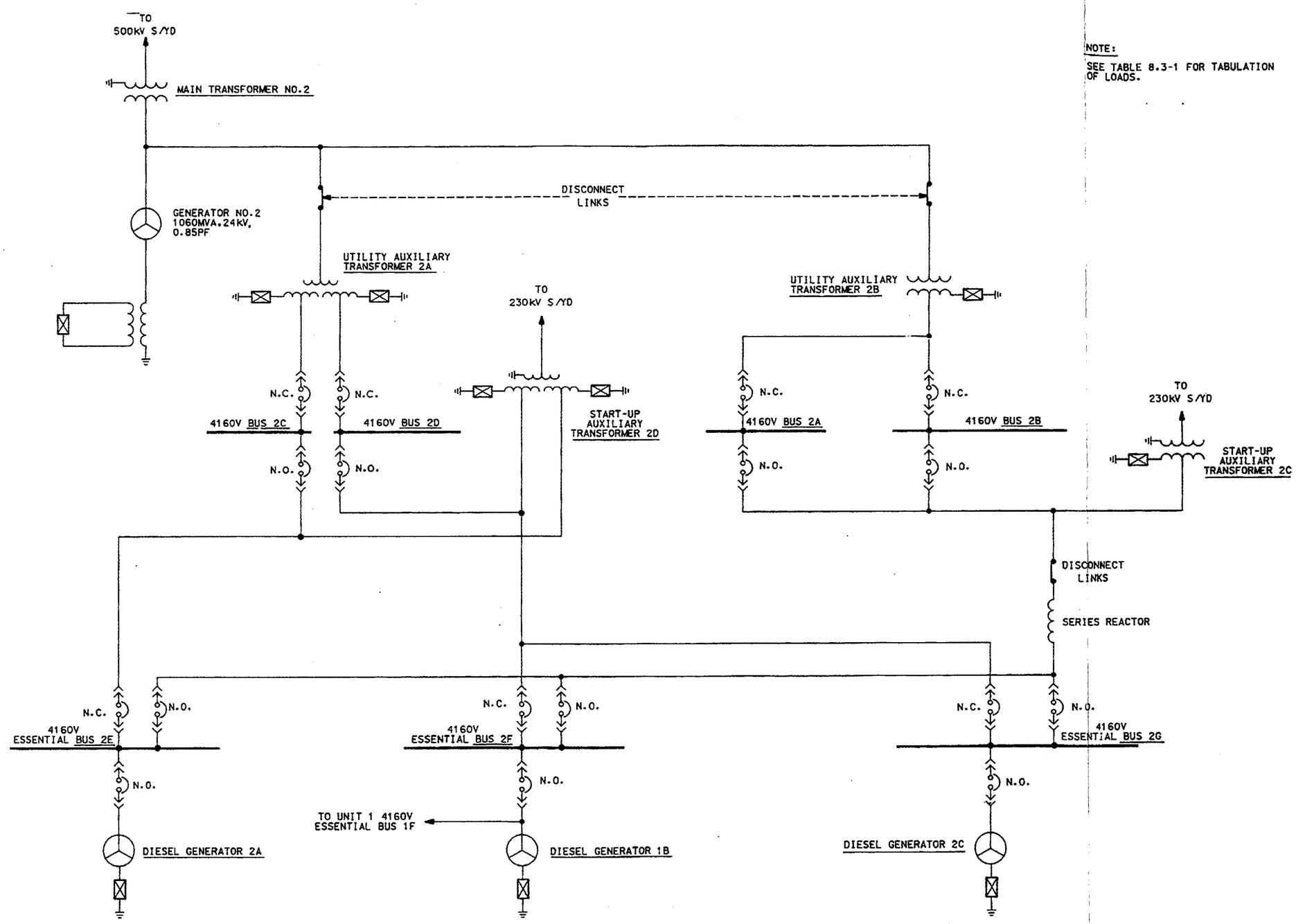

NOTE:

SEE TABLE 8.3-1 FOR TABULATION OF LOADS.

REV 18B 03/00
REFERENCE DWG. H-23350 REV.5

ACAD 2080301

Southern Nuclear

EDWIN I. HATCH
NUCLEAR PLANT-UNIT 2

4160-V AUXILIARY ELECTRICAL
POWER SYSTEM

FIGURE 8.3-1

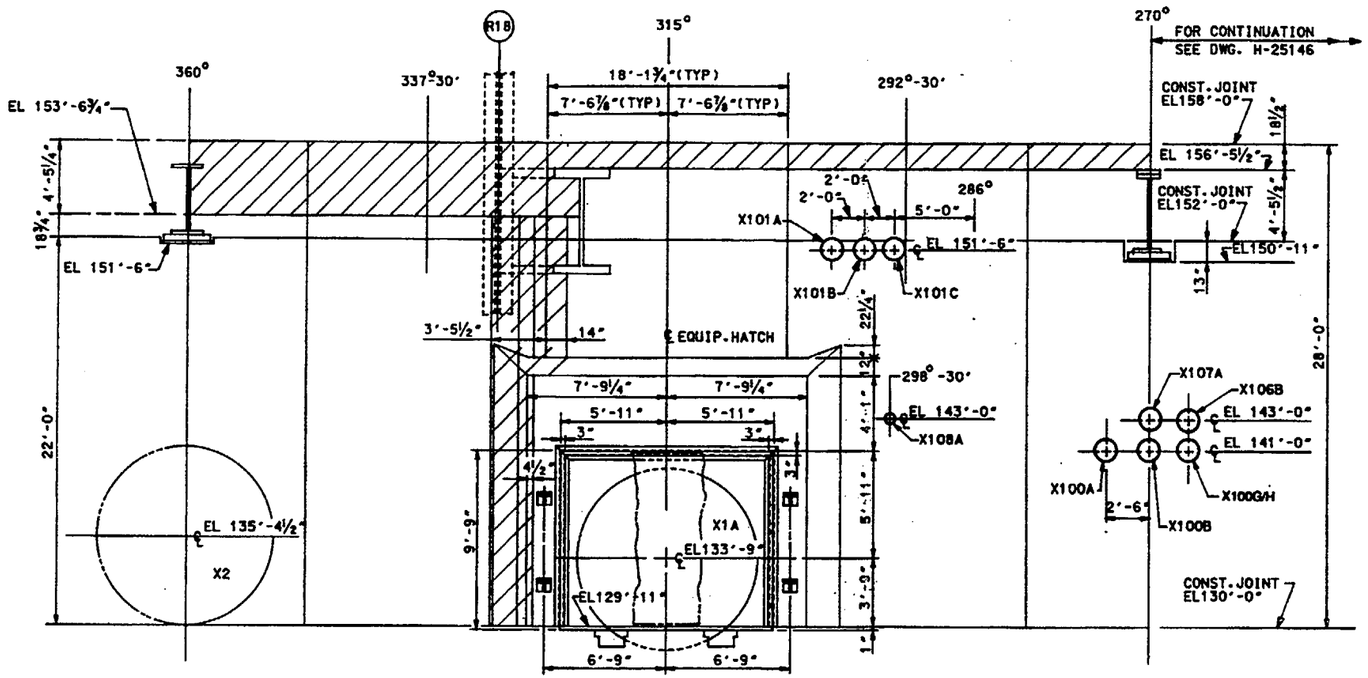

DEVELOPED ELEVATION 270° TO 360°

OUTSIDE FACE FROM EL.130'-0" TO EL.158'-0"

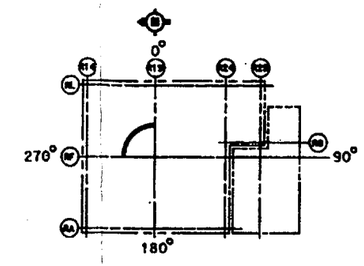

KEY PLAN

NOTES:

1. PENETRATIONS X100A, X100B, X100G/H, X101A, X101B, X101C, X106B & X107B ARE DIVISION 1.
2. PENETRATION X108A IS FOR GROUNDING.

REV 18B 03/00

REFERENCE DWG. S-27287 REV.D

ACAD 20803114

Southern Nuclear — EDWIN I. HATCH NUCLEAR PLANT-UNIT 2

PRIMARY CONTAINMENT ELECTRICAL PENETRATIONS LAYOUT/SECTIONS

FIGURE 8.3-11 (SHEET 4 OF 8)

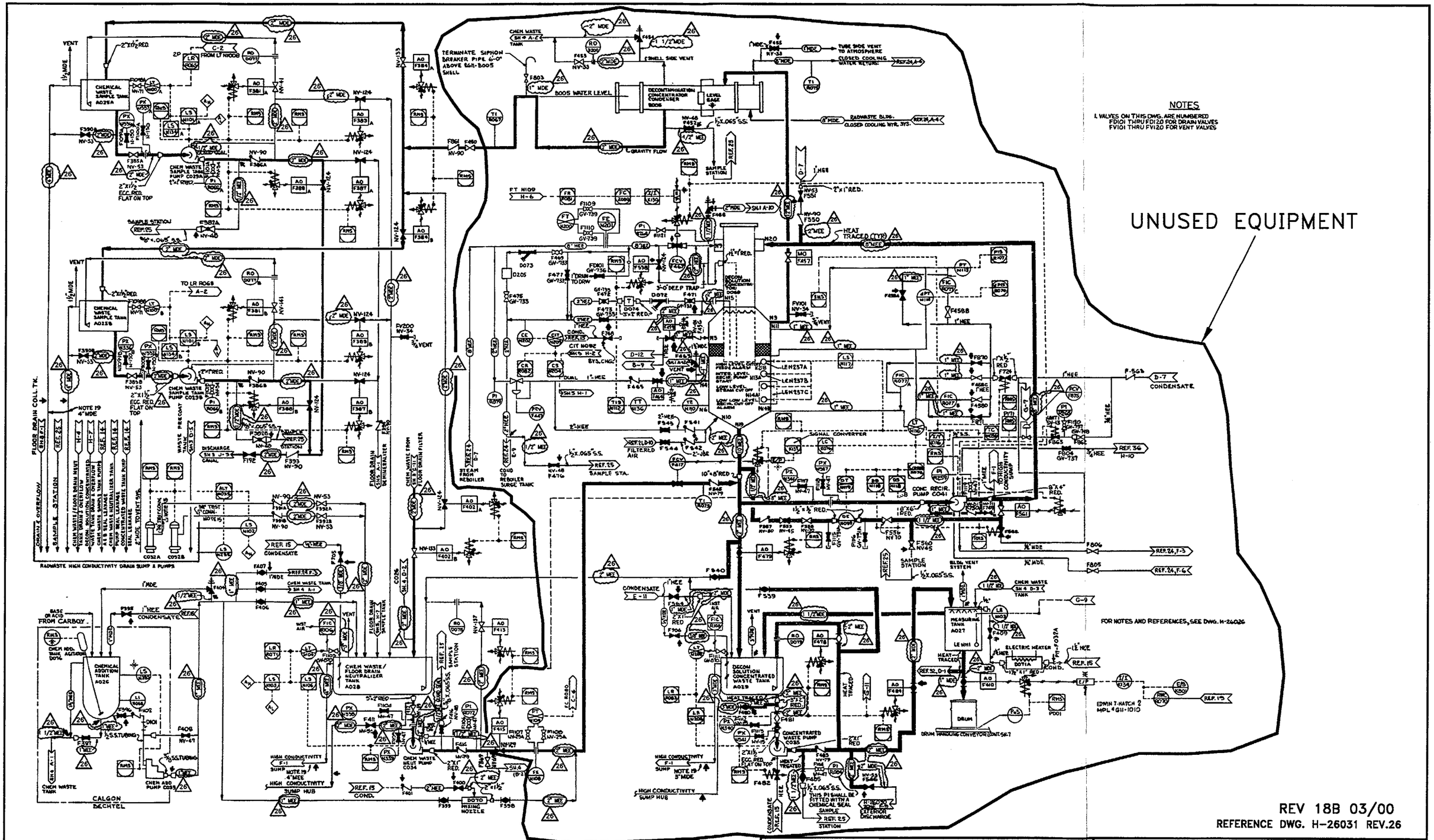
NOTES
1. VALVES ON THIS DWG. ARE NUMBERED FD101 THRU FD120 FOR DRAIN VALVES FV101 THRU FV120 FOR VENT VALVES
UNUSED EQUIPMENT
FOR NOTES AND REFERENCES, SEE DWG. H-26026
REV 18B 03/00
REFERENCE DWG. H-26031 REV.26
Southern Nuclear
EDWIN I. HATCH NUCLEAR PLANT-UNIT 2
RADWASTE SYSTEM P&ID
FIGURE 11.2-1 (SHEET 6 OF 7)
ACAD 21102016

TABLE OF CONTENTS

Chapter 12 RADIATION PROTECTION

12.1 Assuring Occupational Radiation Exposures Are as Low as Reasonably Achievable

12.1.1 Policy Considerations
12.1.2 Design Considerations
12.1.3 Operational Considerations

12.1.3.1 Operating Procedures
12.1.3.2 Radiation and Contamination Control

12.2 Radiation Sources

12.2.1 Contained Sources

12.2.1.1 General
12.2.1.2 Radiation for Reactor Core
12.2.1.3 Activity in Steam and Condensate
12.2.1.4 Activity in Reactor Water Cleanup (RWC) and Condensate Demineralizer
12.2.1.5 Shutdown Sources
12.2.1.6 Spent-Fuel Sources
12.2.1.7 Condensate Storage Tank
12.2.1.8 Miscellaneous Sources

12.2.2 Airborne Radioactive Material Sources
12.2.3 Radiation Sources in the Wet Spent-Fuel Storage Area

12.3 Radiation Protection Design Features

12.3.1 Facility Design Features

12.3.1.1 Plant Layout and Arrangement
12.3.1.2 Design
12.3.1.3 Radiation Zones and Access Control

12.3.2 Shielding

12.3.2.1 Design Objective
12.3.2.2 Design Description
12.3.2.3 Plans and Procedures
12.3.2.4 Inspection and Performance Analysis

TABLE OF CONTENTS (CONTINUED)

12.3.3 Ventilation

12.3.3.1 Design Objectives
12.3.3.2 Design Description

12.3.4 Area Radiation and Airborne Radioactivity Monitoring Instrumentation

12.3.4.1 Area Radiation Monitoring (ARM)
12.3.4.2 Airborne Radioactivity Monitoring

12.4 Dose Assessment

12.4.1 Estimates of Direct Exposure
12.4.2 Estimates of Exposure Due to Inhalation
12.4.3 Site Boundary and Plant Area Dose Rates

12.4.3.1 Skyshine
12.4.3.2 Off-Gas
12.4.3.3 Yearly Doses

12.4.4 Total Annual Exposure

12.5 Health Physics/Chemistry Program

12.5.1 Organization
12.5.2 Equipment, Instrumentation and Facilities

12.5.2.1 Facilities
12.5.2.2 Respiratory Equipment
12.5.2.3 Protective Clothing
12.5.2.4 Portable Instrumentation
12.5.2.5 Laboratory Equipment
12.5.2.6 Personnel Radiation Monitoring Instrumentation
12.5.2.7 Emergency Instrumentation

12.5.3 Procedures

12.5.3.1 Radiation Surveys
12.5.3.2 Personnel Dosimetry
12.5.3.3 Radiation Work Permits
12.5.3.4 Radiation Protection Training
12.5.3.5 Contamination Control
12.5.3.6 Respiratory Protection
12.5.3.7 Radioactive Materials Safety Program (HNP-1 and HNP-2)

12.3.2.2.8 Main Control Room

The DBAs define the protection required for the MCR. The accident conditions and their resultant effects on control room habitability are described in chapter 15. For continued control room occupancy during the DBA, shielding design is based on a whole-body integrated dose of less than 0.5 rem in any 8-h period from any direct radiation due to any possible airborne radioactivity external to the control room following an accident. The MCR is shielded on all sides with 2-ft-thick concrete walls and on the roof with 2-ft 6-in.-thick concrete. The shielding on the floors below the control room is a minimum of 2-ft-thick concrete prior to reaching any external area that may contain radioactive material. The minimum interposing concrete thickness between the control room and the secondary containment is 4 ft, ignoring angularities.

12.3.2.2.9 Service Building

All areas of the service building are fully accessible at all times. Turbine building shielding prevents excessive N-16 shine onto the service building.

12.3.2.2.10 General Plant Yard Areas

Plant yard areas frequently occupied by plant personnel receive a radiation field of less than 0.5 mrem/h. These areas are surrounded by a security barrier and closed off from areas accessible to the general public for reasons of general safety.

12.3.2.2.11 Technical Support Center

The DBAs define the protection required for the technical support center (TSC). The accident conditions and their resultant effects on TSC habitability are described in chapter 15. For TSC occupancy following the DBA, shielding design is based on a whole-body integrated dose of less than 5 rem for the duration of the accident due to any possible airborne radioactivity external to the TSC following an accident. The TSC is shielded on all sides by the equivalent of 6-in.-thick concrete.

12.3.2.2.12 Independent Spent Fuel Storage Installation (ISFSI)

The ISFSI provides additional storage capacity for spent-fuel in dry casks which provide shielding and missile protection. The ISFSI is located in a radiation control area (RCA) south of the main plant protected area within its own protected area. The RCA fence for the ISFSI is established such that the doses at the

fence do not exceed 2 mrem/hr, thereby providing assurance that members of the public allowed onsite do not exceed the limits of 10 CFR 20.1301(b).

12.3.2.3 Plans and Procedures

Aside from the physical layout, shielding, and piping routing, ALARA criteria are ensured with planning and procedures reviewed by the health physics ALARA staff. Details of these plans and procedures are described in section 12.5.

12.3.2.4 Inspection and Performance Analysis

The normal construction quality control program ensures there are no major defects in the shielding. After startup, the adequacy of the shielding and the efficiency of the access control are checked by radiation and contamination surveys performed at various reactor power levels. General surveys are made prior to, or concurrent with, personnel entry into maintenance work areas designated as restricted.

12.3.3 VENTILATION

12.3.3.1 Design Objectives

The plant ventilation system is designed to accomplish the following:

A. Maintain the required ambient air temperature to prevent extreme thermal environmental conditions for operating personnel and equipment.

B. Protect the operating personnel against possible airborne radioactive contamination in areas where this may occur.

C. Ensure the maximum airborne radioactivity levels for normal operation and AOOs are within the limits of 10 CFR 20.1 - 20.601 (found in 10 CFR published before January 1994), Appendix B, table I, column 1, for areas within the plant structures and restricted areas on the plant site.

D. Provide a suitable environment for continuous personnel occupancy in the control room under normal and post-accident conditions in accordance with 10 CFR 50, Appendix A, Criterion 19.

The reload analysis process described in ***NEDE-24011-P-A, "GESTAR II - General Electric Standard Application for Reactor Fuel," (incorporated by reference into the FSAR)*** uses the results of previous event analyses to establish which events require reevaluation for each reload. The cycle-specific supplemental reload licensing reports provide the reload analysis results used to establish the appropriate core operating limits that ensure conformance to the applicable event acceptance limits.

The cycle-specific reload licensing reports for HNP-1 and HNP-2 are listed in table 15.1-1. The core operating limits are provided in each unit's cycle-specific ***Core Operating Limits Report (incorporated by reference into the FSAR)***.

The combined nuclear safety operational analysis (NSOA) (supplement 15C) identifies the system level requirements and operator actions that assure the safety analysis is valid for all limiting operational conditions. The event paths analyzed as "limiting" in the safety analysis generally correspond to one, or a conservative representation of one, of the event paths for each event analyzed in the NSOA.

A list of the events that have been updated for some selected major modifications, including power uprate to a rated thermal power (RTP) of 2763 MWt, and the events that are routinely either reevaluated or reanalyzed as part of the reload analysis process is provided in table 15.1-2.

15.1.2 PROBABILISTIC SAFETY ASSESSMENTS

Probabilistic safety assessments (PSAs) of the plant's response to postulated events can be used as an analytical tool in the plant safety analysis process. The PSA approach allows for:

- Quantification of the probability of exceeding pre-established standards of acceptance (success criteria).
- Categorization and evaluation of failures by relative event probability.
- Measure of overall risk due to plant operation under adverse circumstances.

The compilation of a substantial amount of probabilistic data on component failure rates, types of failures, repair times, and human error is required. Using these data, models are constructed and analyzed to establish realistic risk changes due to failure of various plant functions and systems. The nuclear industry is compiling sources of data and advancing PSA techniques. As these techniques mature and gain acceptance, they are increasingly being

used to provide an appropriate perspective relative to overall plant safety. However, the PSA approach has not matured to the point it is accepted in the overall safety analysis process.

HNP will continue to use a deterministic process of evaluating a wide spectrum of postulated events. Events are analyzed using conservative assumptions to account for uncertainties in the analysis process and are compared to conservative event acceptance limits based upon a qualitative assessment of the relative event probability. As a result, the overall safety analysis process implemented for HNP-1 and HNP-2 has a substantial amount of inherent conservatism.

15.1.3 SELECTION OF EVENTS

The safety analysis contains the evaluation of a wide spectrum of postulated events. Based upon the relative event probabilities and failure assumptions, events are separated into the following three categories:

1. AOOs

   AOOs are conditions of normal operation expected to occur one or more times during the life of the plant.

2. Accidents

   Accidents are postulated events that may affect one or more of the barriers to the release of radioactive material to the environs. These events are not expected to occur during the life of the plant but are used to establish the design basis for many systems.

3. Special Events

   Special events are postulated occurrences analyzed to demonstrate different plant capabilities required by regulatory requirements and guidance, industry codes and standards, and licensing commitments applicable to the plant. Special events may require failure assumptions in excess of AOOs and accidents. This category also encompasses some events that are not considered credible but are, nonetheless, conservatively analyzed consistent with plant-specific licensing commitments.

The analysis results for each event are presented for the conditions that present the most limiting challenge to the overall event acceptance limits. The conditions are selected consistent with the NSOA methodology (supplement 15C), which evaluates

all the significant event paths from within the operating envelope for each event. Therefore, analysis of the selected conditions bounds the potential event paths from the perspective of potential risk to the health and safety of the public.

The event numbers shown in FSAR paragraphs 15.1.3.1, 15.1.3.2, and 15.1.3.3 correspond to the event numbers shown in the NSOA.

15.1.3.1 AOOs

In selecting the AOOs to be analyzed as part of the plant safety analysis, the eight nuclear system parameter variations listed below are considered possible initiating causes of challenges to the fuel or the reactor coolant pressure boundary (RCPB).

- Decrease in core coolant temperature.
  - Loss of feedwater heating (LFWH) (Event 1).
  - Inadvertent start of the high-pressure coolant injection (HPCI) pump (Event 2).
  - Shutdown cooling (RHR) malfunction - decreasing temperature (Event 3).
- Increase in core coolant temperature.
  - Loss of RHR shutdown cooling (Event 4).
- Increase in reactor pressure.
  - Generator load rejection with no bypass (LRNBP) (Event 5).
  - Generator load rejection with bypass (LRBP)(Event 6).
  - Turbine trip with no bypass (TTNBP) (Event 7).
  - Loss of condenser vacuum (Event 8).
  - Turbine trip with bypass (TTBP) (Event 9).
  - Closure of all main steam line isolation valves (MSIVs) (MSIVD) (Event 10).
  - Closure of one MSIV (Event 11).
  - Pressure regulator failure - closed (Event 12).

- Decrease in reactor core coolant flow rate.
  - Trip of one recirculation pump (Event 13).
  - Trip of two recirculation pumps (Event 14).
  - Recirculation flow controller failure - decreasing flow (Event 15).
- Increase in reactor core coolant flow rate.
  - Recirculation flow controller failure - increasing flow (Event 16).
  - Startup of idle recirculation pump (Event 17).
- Reactivity and power distribution anomalies.
  - Control rod withdrawal error (RWE) during power operation (Event 18).
  - Control rod removal error during refueling (Event 19).
  - Fuel assembly insertion error during refueling (Event 20).
- Increase in reactor coolant inventory.
  - Feedwater controller failure - maximum demand (FWCF) (Event 21).
- Decrease in reactor coolant inventory.
  - Inadvertent opening of a safety relief valve (SRV) (Event 22).
  - Pressure regulator failure - open (Event 23).
  - Loss of auxiliary power (Event 24).
  - Loss of feedwater flow (LOFW) (Event 25).

The eight parameter variations listed above include all the effects within the nuclear system (caused by AOOs) that can challenge the integrity of the reactor fuel or RCPB. The variation of any one parameter may cause a change in another parameter; however, for analysis purposes, challenges to barrier integrity are evaluated by groups according to the parameter variation initiating the plant challenge, which typically dominates the event response.

15.1.3.3 Special Events

The following special events are evaluated as part of the plant safety analysis:

- Stability (Event 41).
- Overpressure protection (Event 42).
- Shutdown without control rod insertion [standby liquid control system (SLCS) capability] (Event 43).
- Main control room (MCR) uninhabitability (Event 44).
- Anticipated transient without scram (ATWS) (Event 45).
- Generator load rejection with flux scram and no bypass or RPT (Event 46).
- Turbine trip with flux scram and no bypass or RPT (Event 47).
- Loss of one dc system (Event 48).
- Loss of instrument air (Event 49).
- Loss of service water system (Event 50).
- Fire (Event 51).
- Miscellaneous small releases outside containment (Event 52).
- Instrument line break (Event 53).
- Liquid radwaste tank failure (Event 54).
- Gaseous radwaste tank failure (Event 55).
- Station blackout (SBO) (Event 56).

Stability is evaluated for each reload to meet the fuel cladding integrity SLMCPR. Overpressure protection and shutdown without control rod insertion capability are also evaluated for each reload. Consistent with ***NEDE-24011-P-A (GESTAR II)***, ATWS is evaluated for new fuel designs.

Each special event listed above is discussed in detail in section 15.4.

15.1.4 EVENT ANALYSIS FORMAT

With the exception of operator actions, the analysis format for each event is consistent with Regulatory Guide 1.70, "Standard Format and Content of Safety Analysis Reports for Nuclear Power Plants," Revision 1. Operator actions necessary to preserve the assumptions of the safety analysis are identified in the NSOA (supplement 15C).

HNP has implemented emergency operating procedures (EOPs) based upon industry and Nuclear Regulatory Commission (NRC)-approved EOP guidelines. In some cases, the EOP-specified operator actions may differ from the operator actions identified in the safety analysis and the NSOA for mitigating the same or similar event. The licensee and General Electric Company reviewed the differences and determined they do not violate the overall licensing basis of the plant. In addition, these differences were reviewed by the NRC. The specific differences and their resolutions are documented in references 1 through 4.

Upon implementation of the revised EOPs and the severe accident guidelines (SAGs) in 1998, the EOPs and the SAGs were again reviewed against the operator actions identified in the safety analysis and the NSOA. The differences were reviewed (reference 5) and found not to violate the overall licensing basis of the plant (reference 6).

15.1.5 EVENT ACCEPTANCE LIMITS

The results of the safety analysis for each event must demonstrate conformance to the applicable event acceptance limits that are event specific across the three event categories. The event acceptance limits, the primary regulatory requirements from which the limits are derived, and the associated event acceptance limit values are provided in table 15.1-3 and described in more detail in the remainder of this subsection.

The event acceptance limits and the primary regulatory requirements from which the limits are derived reflect a qualitative assessment of the relative probability of the various events. The more probable events have more restrictive event acceptance limits. The event acceptance limits are associated with overall plant performance for specific events. Conformance with the event acceptance limits is demonstrated by the analyses and evaluations of the specific events discussed in sections 15.2, 15.3, and 15.4. Specific system design bases for systems whose performance is evaluated in the safety analysis are provided in previous chapters of the HNP-1 and HNP-2 FSARs.

failures are independently postulated in each operating unit or one failure is postulated in the common systems.

5. For mitigation systems included in the NSOA, single failures of active electrical and fluid components, and passive electrical components are treated in the same manner in the development of the event diagrams. Single failures in passive fluid components are treated consistent with plant-specific licensing commitments. More specifically, the only single failure in a passive fluid component considered in the plant design is long-term leakage in the ECCS suction piping following a LOCA.

6. During Technical Specifications surveillance testing or when complying with the limiting conditions for operation, applying the single-failure criteria for affected components/systems is not required. This is consistent with component/system reliability assumptions that form the bases for the plant Technical Specifications.

The single failures identified above are considered in the design of the plant, as required by the specific GDC, and are utilized in the safety analysis of the specific events.

15.1.6.2 Single Failures as Event Initiators

The AOOs identified in the safety analysis are frequently associated with transients that result from a single component failure or operator error, and are postulated during specific, applicable mode(s) of normal plant operation. Operator error is only considered as an event initiator.

Operator error is defined as a deviation from written operating procedures or operating practices. An operator error includes action(s) that are a direct consequence of one operator's single erroneous decision. An operator error does not include subsequent actions performed in response to the initiating event that resulted from the initial operator error.

Operator errors include:

- An increase in power above established power and flow, limited by control rod withdrawal in a specified sequence.

- The incorrect calibration of an average power range monitor (APRM).
- The manual isolation of the main steam lines caused by operator misinterpretation of an alarm or indicator.

15.1.7 ANALYSIS METHODS

An overview of safety analysis methods is shown in figure 15.1-1.

The fuel thermal mechanical methods, lattice physics methods, and 3-D simulator are used in the fuel and core design. The fuel thermal mechanical methods used in the initial core design were TEXICO/CLAM, and the methods used for power uprate were GESTR-M. The lattice physics methods and 3-D simulator used in the initial core design were the GENESIS methods, and the GEMINI methods were used for power uprate. The methods used in the reload analyses are identified in the cycle-specific reload licensing reports identified in table 15.1-1.

The LOCA analysis methods are identified in section 6.3. The CRDA analysis methods used are consistent with ***NEDE-24011-P-A (GESTAR II)***.

The radiological evaluation methods are identified on an event-specific basis in subsection 15.3. Two types of evaluations are performed, realistic and conservative. The realistic evaluation methods reflect the analysis results of the accidents, considering the performance of the fission product barriers. The conservative evaluation methods include additional conservatism required by the NRC for site suitability evaluations.

The transient analysis methods used to analyze transient (dynamic) events are shown in figure 15.1-2. The transient analysis methods are used to perform the required analyses of AOOs, the fuel assembly loading error and recirculation pump seizure accidents, and the majority of special events. These analyses establish the operating limit MCPR and demonstrate conformance to the applicable event acceptance limits.

The REDY transient analysis model was used for the original event analyses. ODYN was used for the power uprate analyses of pressurization events. The transient analysis model used in the reload analyses is identified in the cycle-specific reload licensing reports identified in table 15.1-1.

The hot channel analysis methods and the transient critical power methods used in the original event, power uprate, and reload analyses are consistent with ***NEDE-24011-P-A (GESTAR II)***.

TABLE 15.1-3 (SHEET 6 OF 6) [a]

EVENT ACCEPTANCE LIMITS

SPECIAL EVENTS

Event Acceptance Criteria[b]	Event Acceptance Limits[c]	Values[d]
Liquid radwaste tank failure		
Release of radioactive effluents to unrestricted areas (10 CFR 20)	Limit based upon 10 CFR 20	0.5 rem
Gaseous radwaste tank failure		
Release of radioactive effluents to unrestricted areas (10 CFR 20)	Limit based upon 10 CFR 20	0.5 rem
SBO		
SBO (10 CFR 50.63)	Coping capability (4 h)	Reactor water level > level 1 62 psig containment pressure Containment temperature: 281°F (HNP-1) 340°F (HNP-2) Suppression pool heat capacity temperature limit

a. Conformance with the event acceptance limits is demonstrated by the analyses and evaluations of the specific events discussed in sections 15.2 , 15.3, and 15.4.
b. Event acceptance criteria are derived from specific regulatory requirements (10 CFR), including the GDC (10 CFR 50, Appendix A). The primary regulatory requirement used to provide guidance in developing the basis for establishing the specific limit is identified.
c. Event acceptance limits are the specific requirements that have to be satisfied in the safety analysis process. The primary source used as guidance to establish the specific limit is identified.
d. The specific values for the event acceptance limits are identified.

15.4.11 FIRE (EVENT 51)

This section originally provided the results of the evaluation of major and minor internal fires, which was performed for the initial plant design. Since this evaluation was performed, the plant has demonstrated conformance with 10 CFR 50.48, "Fire Protection." The plant fire protection capability is described in the ***FHA***.

The capability of the safe shutdown systems for fire protection was evaluated for power uprate to an RTP of 2763 MWt and found to be acceptable (reference 1).

The reload fuel and core designs do not significantly affect the capability of the safe shutdown systems for fire protection. Therefore, the fire special event does not require reanalysis for reloads.

15.4.12 MISCELLANEOUS SMALL RELEASES OUTSIDE CONTAINMENT (EVENT 52)

This subsection provides the results of the evaluation of miscellaneous small releases outside containment, which was performed for the initial plant design to demonstrate this plant capability. Power uprate to an RTP of 2763 MWt does not significantly affect this plant capability.

Miscellaneous small releases outside containment do not directly initiate any plant event, nor do they significantly affect the reload fuel and core designs. Therefore, this event does not require reanalysis for reloads.

Releases that can occur from piping failures outside containment include the following:

- Feedwater line break (HNP-2-FSAR subsection 15.3.8).
- Main steam line break (HNP-2-FSAR subsection 15.3.4).
- Instrument line break (HNP-2-FSAR subsection 15.4.13).

The analysis of these events provides doses that can occur for such a classification of piping failure events.

Other releases that can occur outside containment include small spills and leaks of radioactive material inside structures housing process equipment.

Conservative values for leakage were assumed and evaluated as discussed in HNP-2-FSAR sections 11.2 and 11.3. The offsite dose that results from any small spill that can occur outside containment will be negligible in comparison to the dose resulting from other events involving the release of radioactive material outside containment.

15.4.13 INSTRUMENT LINE BREAK (EVENT 53)

This subsection provides the analysis results for breaks in instrument lines or small lines from the RCPB that penetrate the primary containment (instrument line break). This analysis was performed for the original rated conditions (2436 MWt). Based upon this analysis, it was concluded the instrument line break is a nonlimiting special event and does not require reanalysis for reloads, because it is bounded by other events.

Because no fuel failures are predicted to occur as a result of an instrument line break, only the activity in the reactor coolant or from preexisting fuel defects is released during the event.

The Technical Specifications limit reactor coolant activity. The reactor coolant activity assumed in the analysis is greater than the Technical Specifications limit.

The increase in RTP to 2763 MWt does not affect reactor coolant activity. Therefore, the power uprate to an RTP of 2436 MWt does not represent a significant increase in the event consequences.

15.4.13.1 Identification of Causes

No specific event or circumstance that results in the failure of an instrument line has been identified. However, for the purpose of evaluating the consequences of a small-line rupture, the failure of an instrument line is assumed to occur. A sampling line break (in lieu of the control rod drive hydraulic system (CRDHS) return header, the insert and withdraw line, and the radwaste sump pump discharge line) was selected as a worst-case instrument line break based upon the following considerations:

A. CRDHS return header - This piping is provided with inside and outside containment check valves and a third air-operated check valve.

B. Insert and withdraw line - This piping is connected to a hydraulic drive assembly, which by virtue of its configuration, significantly limits fluid flow through the broken pipe.

disorder is annunciated in the MCR, the above condition should not persist for a period no greater than 10 min before operator action to terminate the event is initiated.

Case 2 Assuming starting conditions as described in item B above:

A complete loss of sealing steam can be caused by either a failure of the site auxiliary steam boiler system to supply sufficient quantities of steam or a failure of the various control valves to maintain steam-seal header pressure.

In either of the above two cases, the result for the low-pressure turbines' shaft packing is essentially the same. That is, air is drawn into the turbine casing along the turbine shaft, resulting in cool-air quenching of the hot turbine shaft, which causes excessive shaft vibration.

In case 1, the turbine high-pressure packing releases steam to the turbine building environment. No adverse effects due to radiation are expected, since the plant analysis of the main steam line break accident (MSLBA) in the turbine building reveals that any high-energy or moderate-energy line failure outside the primary containment will not result in radiation exposures to MCR personnel or the general public exceeding allowable limits.

In case 2, the high-pressure turbine packings are under a negative pressure; consequently, the packings will also draw cool air into the turbine casing, as in the case of the low-pressure turbine packings.

15.4.15.3.3.2 Loss of Vacuum in the Gland-Seal Condenser. During normal operation, one of two gland-seal condenser blowers removes noncondensables from the gland-seal condenser. In the event one blower malfunctions, the backup blower automatically assumes the gas-removal requirements. Assuming the loss of both blowers, the vacuum in the gland-seal condenser is lost. The pressure in the steam-seal exhaust header increases to a pressure greater than atmospheric, causing sealing steam to leak into the turbine building through the turbine glands.

15.4.15.3.4 Analysis of Effects and Consequences

15.4.15.3.4.1 Realistic (Conservative Engineering) Evaluation Methods. The analytical methods and associated assumptions used

in evaluating the consequences of a malfunction of the turbine gland-sealing system are considered to provide a realistic, yet conservative, assessment of the consequences.

15.4.15.3.4.1.1 Conditions and Assumptions. In the event sealing steam is lost, the action of cool air being drawn into the sealing glands and the resultant shaft vibration will cause tripping of the turbine-generator by the excessive shaft vibration trip. This tripping mechanism is independent of operator action and, consequently, produces a rapid and safe shutdown of the turbine-generator.

15.4.15.3.4.1.2 Results and Consequences. The results and consequences of the malfunction of the turbine gland-sealing system are provided below:

Fuel Damage

No cladding perforations result from a malfunction of the turbine gland-sealing system.

Fission Product Released from the Fuel

No fission product released from the fuel results from a malfunction of the turbine gland-sealing system.

Fission Product Released to the Environment

Failure of the gland-sealing system results in the release of radioactive steam to the turbine building. Due to the above hypothesized events, the amount of steam released to the turbine building is small because of the close clearances in the turbine shaft sealing glands. Any release will be well below the release used for the failure of the SJAE lines (paragraph 15.4.15.2), as well as far below that of the MSLBA discussed in subsection 15.3.4.

Radiological Effects

The radiological effects are inconsequential, since any release will be well below the releases used for the failure of the SJAE lines (paragraph 15.4.15.2).

15.4.16 SBO (EVENT 56)

The SBO evaluations are provided to demonstrate compliance with 10 CFR 50.63. SBO is defined in 10 CFR 50.2 as the complete loss

TABLE OF CONTENTS

Supplement 15A DESIGN AGAINST HIGH-ENERGY PIPE BREAKS OUTSIDE THE PRIMARY CONTAINMENT

15A.1 Purpose
15A.2 Introduction
15A.3 General Design Evaluation

15A.3.1 Evaluation With Respect to AEC Criteria
15A.3.2 Inherent Plant Safety Features With Respect to Design Against High-Energy Pipe Failures

15A.4 Methods of Analysis and Assumptions

15A.4.1 Identification of High-Energy Fluid Systems

15A.4.1.1 High-Energy Lines Identified
15A.4.1.2 Moderate-Energy Lines Identified

15A.4.2 High-Energy Piping System Failure Assumptions

15A.4.2.1 High-Energy Line Breaks
15A.4.2.2 High-Energy and Moderate-Energy Line Cracks
15A.4.2.3 Other Failure Assumptions
15A.4.2.4 Piping Penetration Containment

15A.4.3 Jet Impingement and Pipe Whip Analysis
15A.4.4 Compartment Pressure-Temperature Analysis

15A.4.4.1 General Approach and Assumptions

TABLE OF CONTENTS (CONTINUED)

15A.4.4.2 The Mathematical Model
15A.4.4.3 COPATTA

15A.5 Detailed System Analyses

15A.5.1 Main Steam Line Break

15A.5.1.1 MSLB in Main Steam Pipe Chase
15A.5.1.2 MSLB in Turbine Building
15A.5.1.3 Analysis of Shutdown Capability

15A.5.2 Feedwater Line Break

15A.5.2.1 Feedwater Line Break in Main Steam Pipe Chase
15A.5.2.2 Feedwater Line Break in Turbine Building
15A.5.2.3 Analysis of Shutdown Capability

15A.5.3 HPCI Steam Line Break

15A.5.3.1 Pressure-Temperature Analysis
15A.5.3.2 Analysis of Shutdown Capability

15A.5.4 RCIC Steam Line Break

15A.5.4.1 Pressure-Temperature Analysis
15A.5.4.2 Analysis of Shutdown Capability

15A.5.5 RWC Line Break

15A.5.5.1 Pressure-Temperature Analysis

TABLE OF CONTENTS (CONTINUED)

15A.5.5.2 Analysis of Shutdown Capability

15A.5.6 Moderate-Energy Line Cracks

15A.5.6.1 CRD Return Line Cracks
15A.5.6.2 Auxiliary Steam Line Cracks
15A.5.6.3 RHRSW Line Cracks
15A.5.6.4 Sampling Lines

15A.5.7 Radiological Considerations

15A.6 Summary of Plant Modifications

15A.6.1 Modifications as a Result of Pressure-Temperature
15A.6.2 Barriers Provided to Protect Against Jet Impingement

15A.7 Conclusions

LIST OF TABLES

Table No.	Table Title
15A-1	Moderate- and High-Energy Lines
15A-2	Blowdown Data for High-Energy Line Breaks
15A-3	Equipment Required and/or Preferred for Use in Reactor Shutdown Following a High-Energy Line Break Outside Primary Containment

LIST OF FIGURES

Figure No.	Figure Title
15A-1	MSLB Accident - Mass of Coolant Loss Through Break With 5-s MSIV Closing Time
15A-2	Location of Main Control Room With Respect to Main Lines (Looking East)
15A-3	Main Steam and Feedwater Lines in Main Steam Pipe Chase, Reactor Building, Elevation View Looking South
15A-4	Main Steam and Feedwater Lines, Main Steam Pipe Chase - Reactor Building - Plan View
15A-5	(Sheet 1 of 2) Reactor Feedpump Discharge Turbine Building
15A-5	(Sheet 2 of 2) Main Steam and Feedwater Lines Turbine Building
15A-6	Main Steam Line Isometric Diagram, Reactor and Turbine Buildings
15A-7	HPCI Steam and RHR Lines, Pipe Penetration Room, Reactor Building el 130 ft - Plan View
15A-8	HPCI Steam Line and Plant Service Water Lines - Torus Room, Reactor Building - Plan View
15A-9	RHR Lines, Torus and East Corner Rooms - Reactor Bldg Below el 130 ft Plan View
15A-10	RCIC Steam Line and Plant Service Water, Northwest Corner Room, Reactor Building, Below el 130 ft - Plan View
15A-11	RWC - Reactor Building el 158 ft Plan View
15A-12	Auxiliary Steam System Piping Arrangement
15A-13	RHR and Plant Service Water Piping Intake Structure
15A-14	Main Steam and Feedwater Anchor Frame Details Main Steam Pipe Chase
15A-15	Flow Model - MSLB in Pipe Chase Room
15A-16	Flow Model - HPCI Steam Line Break in Torus Room
15A-17	Flow Model - HPCI Steam Line Break in Pipe Penetration Room
15A-18	Flow Model - RWCU Line Break in Pump Room - Reactor Building
15A-19	Vent Room el 164 ft and Vent Area Addition From Main Steam Pipe Chase to Vent Room to Turbine Building - Reactor Building
15A-20	Vent Area Addition to Turbine Building From Main Steam Pipe Chase, Reactor Building
15A-21	Vent Area From Pipe Penetration Room, Reactor Building Floor el 130 ft, to Torus Room

LIST OF FIGURES (CONTINUED)

Figure No.	Figure Title
15A-22	Vent Area Restrictors Around Drywell Penetrations
15A-23	Feedwater From Reactor Feed Pump Discharge to Pipe Chase Anchor Piping Isometric
15A-24	HPCI Steam Supply to Turbine and RHR Heat Exchangers-Piping Isometric
15A-25	RCIC Steam Supply to Turbine Piping Isometric
15A-26	(Sheet 1 of 2) RWC From Reactor Recirculation Loop to Nonregenerative Heat Exchanger-Piping Isometric
15A-26	(Sheet 2 of 2) RWC From Regenerative Heat Exchanger to Feedwater Line-Piping Isometric
15A-27	RCIC Pump Discharge to Feedwater-Piping Isometric
15A-28	Stress Summary and Breakpoint Locations

TABLE OF CONTENTS

Supplement 15A.A Response to NRC Question A & PCSB-1

15A.A.1 Background
15A.A.2 Additional High-Energy Lines Analyzed

15A.A.2.1 RCIC Injection Line
15A.A.2.2 RCIC Turbine Steam Exhaust Line
15A.A.2.3 RWC System Piping in the Pipe Nest Room and Filter Demineralizer Room
15A.A.2.4 CRD Return Line to the Reactor Pressure Vessel
15A.A.2.5 Condensate System
15A.A.2.6 SJAE Off-Gas Lines

15A.A.3 (deleted)
15A.A.4 Additional Moderate-Energy Lines Needed to be Analyzed

TABLE OF CONTENTS

Supplement 15C NUCLEAR SAFETY OPERATIONAL ANAYSIS (HNP-1 and HNP-2)

15C.1 Analytical Approach

15C.1.1 NSOA Objective
15C.1.2 NSOA Relationship to Safety Analysis

15C.2 Method of Analysis

15C.2.1 Operational Criteria
15C.2.2 Analysis Assumptions/Initial Conditions

15C.2.2.1 Operating States
15C.2.2.2 Operating Modes
15C.2.2.3 Planned Operation
15C.2.2.4 Key Bounding Parameters for Planned Operation

15C.2.3 Required Actions
15C.2.4 Event Analysis Rules

15C.3 NSOA Results

15C.3.1 Event Evaluations and Diagrams
15C.3.2 Auxiliary System Evaluation and Diagrams
15C.3.3 Summary Matrices

15C.4 Event Evaluations

15C.4.1 Anticipated Operational Occurrences

15C.4.1.1 Decrease in Reactor Coolant Temperature
15C.4.1.2 Increase in Reactor Coolant Temperature
15C.4.1.3 Increase in Reactor Pressure
15C.4.1.4 Decrease in Reactor Coolant Flow Rate
15C.4.1.5 Increase in Reactor Coolant Flow Rate
15C.4.1.6 Reactivity and Power Distribution Anomalies
15C.4.1.7 Increase in Reactor Coolant Inventory

TABLE OF CONTENTS(CONTINUED)

	15C.4.1.8	Decrease in Reactor Coolant Inventory
15C.4.2	Accidents	
	15C.4.2.1	Control Rod Drop Accident (CRDA) (Event 31)
	15C.4.2.2	Loss of Coolant Accident (LOCA) (Event 32)
	15C.4.2.3	Main Steam Line Break Accident (MSLBA) (Event 33)
	15C.4.2.4	Fuel-Handling Accident (Event 34)
	15C.4.2.5	Fuel Assembly Loading Error (Event 35)
	15C.4.2.6	Recirculation Pump Seizure (Event 36)
	15C.4.2.7	Feedwater Line Break Accident (Event 37)
15C.4.3	Special Events	
	15C.4.3.1	Stability (Event 41)
	15C.4.3.2	Overpressure Protection (Event 42)
	15C.4.3.3	Shutdown Without Control Rod Insertion (SLCS Capability) (Event 43)
	15C.4.3.4	MCR Uninhabitability (Event 44)
	15C.4.3.5	Anticipated Transient Without Scram (ATWS) (Event 45)
	15C.4.3.6	Generator Load Rejection With Flux Scram and No Bypass or RPT (Event 46)
	15C.4.3.7	Turbine Trip With Flux Scram and No Bypass or RPT (Event 47)
	15C.4.3.8	Loss of One dc System (Event 48)
	15C.4.3.9	Loss of Instrument Air (Event 49)
	15C.4.3.10	Loss of Service Water System (Event 50)
	15C.4.3.11	Fire (Event 51)

TABLE OF CONTENTS(CONTINUED)

15C.4.3.12	Miscellaneous Small Releases Outside Containment (Event 52)
15C.4.3.13	Instrument Line Break (Event 53)
15C.4.3.14	Liquid Radwaste Tank Failure (Event 54)
15C.4.3.15	Gaseous Radwaste Tank Failure (Event 55)
15C.4.3.16	Station Blackout (SBO) (Event 56)

LIST OF TABLES

Table No.	Table Title
15C-1	Operational Criteria
15C-2	BWR Operating States/Operating Modes
15C-3	Events Associated with Operating States
15C-4	Key Bounding Parameters for Planned Operation
15C-5	Required Actions
15C-6	Event Analysis Rules
15C-7	NSOA System/Event Matrix
15C-8	NSOA Automatic Instrument Trip/Event Matrix
15C-9	NSOA Monitored Parameter/Event Matrix
15C-10	NSOA Auxiliary System/Event Matrix

LIST OF FIGURES

Figure No.	Figure Title
15C-1	NSOA Relationship to Safety Analysis and Design Process
15C-2	Event Diagram Format
15C-3	Auxiliary System Diagram Format
15C-4	Loss of Feedwater Heating Event Diagram
15C-5	Inadvertent Start of HPCI Pump Event Diagram
15C-6	Shutdown Cooling (RHR) Malfunction - Decreasing Temperature Event Diagram
15C-7	Loss of RHR Shutdown Cooling Event Diagram
15C-8	Generator Load Rejection with No Bypass Event Diagram
15C-9	Generator Load Rejection with Bypass Event Diagram
15C-10	Turbine Trip with No Bypass Event Diagram
15C-11	Loss of Condenser Vacuum Event Diagram
15C-12	Turbine Trip with Bypass Event Diagram
15C-13	Closure of All MSIVs Event Diagram
15C-14	Closure of One MSIV Event Diagram
15C-15	Pressure Regulator Failure - Closed Event Diagram
15C-16	Trip of One Recirculation Pump Event Diagram
15C-17	Trip of Two Recirculation Pumps Event Diagram
15C-18	Recirculation Flow Controller Failure - Decreasing Flow Event Diagram
15C-19	Recirculation Flow Controller Failure - Increasing Flow Event Diagram
15C-20	Startup of Idle Recirculation Pump Event Diagram
15C-21	Control Rod Withdrawal Error Event Diagram

LIST OF FIGURES (CONTINUED)

Figure No.	Figure Title
15C-22	Control Rod Removal Error During Refueling Event Diagram
15C-23	Fuel Assembly Insertion Error During Refueling Event Diagram
15C-24	Feedwater Controller Failure - Maximum Demand Event Diagram
15C-25	Inadvertent Opening of an SRV Event Diagram
15C-26	Pressure Regulator Failure - Open Event Diagram
15C-27	Loss of Auxiliary Power Event Diagram
15C-28	Loss of Feedwater Flow Event Diagram
15C-29	Control Rod Drop Accident Event Diagram
15C-30	Loss of Coolant Accident Event Diagram
15C-31	Main Steam Line Break Accident Event Diagram
15C-32	Fuel-Handling Accident Event Diagram
15C-33	Fuel Assembly Loading Error Event Diagram
15C-34	Recirculation Pump Seizure Event Diagram
15C-35	Feedwater Line Break Event Diagram
15C-36	Stability Event Diagram
15C-37	Overpressure Protection Event Diagram
15C-38	Shutdown Without Control Rod Insertion (SLCS Capability) Event Diagram
15C-39	MCR Uninhabitability Event Diagram
15C-40	Anticipated Transient Without Scram Event Diagram
15C-41	Generator Load Rejection with Flux Scram and No Bypass or RPT Event Diagram

LIST OF FIGURES(CONTINUED)

Figure No.	Figure Title
15C-42	Turbine Trip with Flux Scram and No Bypass or RPT Event Diagram
15C-43	Loss of One dc System Event Diagram
15C-44	Loss of Instrument Air Event Diagram
15C-45	Loss of Service Water System Event Diagram
15C-46	Fire Event Diagram
15C-47	Miscellaneous Small Releases Outside Containment Event Diagram
15C-48	Instrument Line Break Event Diagram
15C-49	Liquid Radwaste Tank Failure Event Diagram
15C-50	Gaseous Radwaste Tank Failure Event Diagram
15C-51	Station Blackout Event Diagram
15C-52	Auxiliary Systems for Front-Line Systems
15C-53	Auxiliary Systems for Other Auxiliary Systems

SUPPLEMENT 15C

NUCLEAR SAFETY OPERATIONAL ANALYSIS

15C.1 ANALYTICAL APPROACH

This supplement provides the results of the combined nuclear safety operational analysis (NSOA) for HNP-1 and HNP-2. The two units have virtually identical system designs, and similar thermal-hydraulic and transient behavior characteristics. Therefore, the NSOA results are considered applicable to HNP-1 and HNP-2.

15C.1.1 NSOA OBJECTIVE

The objective of the NSOA is to identify the system level requirements that assure the safety analysis (chapter 15) is valid for all limiting operational conditions.

To satisfy this objective, the NSOA is used to identify the system level requirements for each event considered part of the safety analysis for the entire spectrum of operational conditions in which the event is postulated to occur. Figure 15C-1 illustrates the process by which NSOA results are derived and the relationship between the NSOA and the safety analysis.

15C.1.2 NSOA RELATIONSHIP TO SAFETY ANALYSIS

The safety analysis is performed to demonstrate compliance with appropriate event acceptance limits (subsection 15.1.5) for limiting event paths. The NSOA is performed to demonstrate the systems identified in the event and auxiliary system diagrams are capable of satisfying all required actions and operational criteria for all modes of planned operation. Thus, the safety analysis is essentially consequences oriented, while the NSOA is event/system oriented.

The event paths analyzed as "limiting" in the safety analysis generally correspond to one, or a conservative representation of one, of the event paths for each event in the NSOA.

15C.2 METHOD OF ANALYSIS

15C.2.1 OPERATIONAL CRITERIA

In the NSOA process, the operational criteria are used in conjunction with the required actions to assure conformance with the safety analysis event acceptance limits (subsection 15.1.5). The operational criteria are identified in table 15C-1.

The operational criteria establish the requirements for:

- Satisfying the applicable required actions to demonstrate conformance with event acceptance limits.
- Applying the single failure criteria (subsection 15.1.6).
- Satisfying requirements unique to certain events.

Operational criteria are based upon the applicable regulatory requirements and guidance, industry codes and standards, plant-specific licensing commitments, nuclear steam supply system (NSSS) requirements, and fuel supplier design requirements.

15C.2.2 ANALYSIS ASSUMPTIONS/INITIAL CONDITIONS

15C.2.2.1 Operating States

Four boiling water reactor (BWR) operating states encompassing the entire operating envelop in which the plant can exist are defined in table 15C-2. The main objective in selecting operating states is to divide the plant operating spectrum into sets of initial conditions. This facilitates consideration of various events in each state. The events associated with each operating state are provided in table 15C-3.

Operating states are differentiated by a significant change in operational characteristics. The selection of not shutdown versus shutdown is based upon differences in reactivity control requirements. Requirements to shut down the reactor, under certain circumstances, are replaced by refueling interlock requirements. The selection of vented versus not vented is based upon differences in core cooling requirements. When the reactor pressure vessel (RPV) is vented, there is no requirement for the high pressure makeup systems (i.e., reactor core isolation cooling (RCIC) and high pressure coolant injection [HPCI]), because the reactor cannot become significantly pressurized.

Also, with the RPV vented, the loss-of-coolant accident (LOCA) is not considered credible.

Each operating state includes an allowable range of values for important plant parameters. Within each state, these parameters are considered over their entire range.

For each event, the operating states in which the event can occur are determined. An event is considered applicable within an operating state if it can be initiated from the operating envelope and operating modes that characterize the operating state.

15C.2.2.2 Operating Modes

The operating states encompass all operating modes associated with planned operation and their respective operating envelopes. The plant operating modes associated with each operating state are identified in table 15C-2.

Together, the BWR operating states and the operating modes associated with planned operations define the operating envelope from which anticipated operational occurrences (AOOs), accidents, and special events are initiated. BWR operating states define the physical condition (e.g., pressure, temperature) of the reactor. Operating modes define what the plant is doing. The separation of the physical conditions from the operation being performed is deliberate and facilitates careful consideration of all possible initial conditions from which events may be postulated to occur.

15C.2.2.3 Planned Operation

Planned operation refers to normal plant operation under planned conditions within the allowable operating envelope in the absence of significant abnormalities. Following an event (AOO, accident, or special event), planned operation is not considered to have resumed until the plant operating state is identical to a planned operating mode that could have been attained had the event not occurred. As defined, planned operation can be considered as a chronological sequence:

> Refueling outage ⇨ achieving criticality ⇨ heatup ⇨ power operation ⇨ achieving shutdown ⇨ cooldown ⇨ refueling outage

15C.2.2.4 Key Bounding Parameters for Planned Operation

For planned operation, the key bounding parameters, which assure the initial conditions assumed in the safety analysis are observed, and their implementing documents are provided in table 15C-4.

Maintaining planned operation within the bounds of the initial conditions assumed in the safety analysis assures conformance to the appropriate event acceptance limits (subsection 15.1.5). The implementing documents for the key bounding parameters (table 15C-4) indicate the method of controlling the parameter (e.g., Technical Specifications, ***Core Operating Limits Report (COLR) (incorporated by reference into the FSAR)***, and plant procedures) during plant operation.

15C.2.3 REQUIRED ACTIONS

Required actions are used in the NSOA process to assure conformance with the NSOA operational criteria and safety analysis event acceptance limits (subsection 15.1.5). The end result of the plant systems performing their design function, in a timely manner, constitutes the required action. The required actions and their relationships to the event acceptance limits are identified in table 15C-5.

Via the NSOA and safety analysis, required actions and event acceptance limits need to be considered together. The required actions demonstrate that the event path is acceptable. The event acceptance limits establish that an acceptable margin of safety is available.

15C.2.4 EVENT ANALYSIS RULES

The event analysis rules are consistent with applicable regulatory requirements and guidance, plant-specific licensing commitments, and applicable industry codes and standards. Table 15C-6 provides the event analysis rules used in performing the NSOA, along with explanations of the individual rules.

15C.3 NSOA RESULTS

15C.3.1 EVENT EVALUATIONS AND DIAGRAMS

The individual event evaluations in conjunction with their respective event diagrams document the detailed results of the NSOA. The event diagram format is shown in figure 15C-2. The event evaluations are provided in section 15C.4 and the associated event diagrams are shown in figures 15C-4 through 15C-51.

An event diagram for each event evaluated identifies the applicable operating states (for the overall event evaluation and, where applicable, for event paths that only apply to specific operating states), the required actions, the relationship of system operation and operator actions to the required actions, and the required functional redundancy. In addition, event diagrams identify each signal that initiates automatic system operation or alerts the operator to the need for action.

Each event evaluation and diagram provide all the required event paths for the specific event. Limiting system requirements for the event are derived from the NSOA to assure the limiting event evaluated in the safety analysis (chapter 15) bounds the consequences of all potential event paths. The combination of the safety analysis and NSOA assures the applicable event acceptance limits, subsection 15.1.5, are satisfied for all events considered part of the safety analysis.

15C.3.2 AUXILIARY SYSTEM EVALUATION AND DIAGRAMS

Auxiliary systems are systems required for the proper functioning of front-line or other auxiliary systems. These systems are shown on auxiliary system diagrams. The auxiliary system diagram format is shown in figure 15C-3. The specific auxiliary system diagrams are shown in figures 15C-52 and 15C-53.

Using the information on the auxiliary system diagrams together with the event diagram, the complete system requirements for each event can be determined. Each system identified on an auxiliary system diagram is necessary to provide a required system function to support a front-line or another auxiliary system. Each auxiliary system is associated with all events for which it is required through the front-line system(s) it ultimately supports.

It should be noted that, in figure 15C-53, offsite ac power is shown as an auxiliary support system to illustrate the safety analysis requirements for the standby ac power system and the

offsite ac power system. Based upon safety analysis requirements, the offsite ac power system is assumed to be available for all events, unless it is either lost as part of the event definition or assumed not to be available as part of the safety analysis requirements. The offsite ac power system is assumed to be unavailable for the following events:

- Lost as part of event definition.
  - Loss of residual heat removal (RHR) shutdown cooling (event 4).
  - Loss of auxiliary power (event 23).
  - Anticipated transient without scram (ATWS) (loss of auxiliary power only) (event 55).
  - Station blackout (SBO) (event 56).
- Not available as part of safety analysis requirements.
  - LOCA (event 32).
  - Main steam line break accident (MSLBA) (event 33).
  - Feedwater line break (event 38).
  - Fire (event 51).

The standby ac power system has the capability to provide ac power for all of the required front-line and auxiliary systems.

15C.3.3 SUMMARY MATRICES

A system, instrument trip, or operator action is considered "required" if identified on an event diagram as necessary to satisfy a required action or the operational criteria. Required auxiliary systems for each event are identified via the auxiliary system diagrams.

Based upon the event evaluations and diagrams, matrices are provided in tables 15C-7 through 15C-10 to identify the required systems, automatic instrument trips, monitored parameters (associated with required operator actions), and auxiliary systems for the events evaluated in the NSOA and the safety analysis.

15C.4 EVENT EVALUATIONS

15C.4.1 ANTICIPATED OPERATIONAL OCCURRENCES

15C.4.1.1 Decrease in Reactor Coolant Temperature

15C.4.1.1.1 Loss of Feedwater Heating (LFWH) (Event 1)

The event description and the safety analysis for the LFWH event are provided in paragraph 15.2.1.1. The event evaluation is documented in figure 15C-4.

A rapid decrease in feedwater temperature when the feedwater flow is mixed with the recirculation flow gradually increases core inlet subcooling, causing a relatively slow power increase and shift in power distribution toward the bottom of the core. The increase in power slightly increases steam flow, resulting in a small increase in RPV pressure due to the larger steam line pressure drops, assuming the pressure regulator acts to maintain constant turbine inlet pressure. A scram on high average power range monitor (APRM) simulated thermal power may occur depending upon the magnitude of the loss of feedwater heating and the resulting power increase. A conservative representation of the largest and most rapid loss of feedwater heating resulting from a single active component failure in the manual flow control mode is analyzed.

An inherent assumption in the safety analysis process is that the pressure regulation system and the turbine bypass system can accommodate the additional steam produced as a result of the power increase without significantly increasing RPV pressure.

LFWH is considered only in operating state D (figure 15C-4), because significant feedwater heating occurs only during power operation with the main turbine in operation.

Depending upon the magnitude of the power increase, the neutron monitoring system (NMS) APRMs may initiate a high simulated thermal power trip.

A. If a simulated thermal power trip does not occur, the reactor will stabilize in a new steady-state operating condition until action is taken to return the reactor to a planned operating condition.

B. If a simulated thermal power trip occurs, the NMS input into the reactor protection system (RPS) initiates a scram.

Because the feedwater control, recirculation flow control, pressure regulation, and turbine bypass systems remain in operation throughout the event, no unique requirement for pressure relief or core cooling arises. The normal operating systems fulfill these required actions.

RPV isolation is not required for event mitigation.

15C.4.1.1.2 Inadvertent Start of the HPCI Pump (Event 2)

The event description and the safety analysis for the inadvertent start of the HPCI pump are provided in paragraph 15.2.1.2. The event evaluation is documented in figure 15C-5.

The inadvertent starting of the HPCI pump results in an addition of colder water to the RPV from the condensate storage tank (CST) through the feedwater system. Increased feedwater flow at a colder temperature mixes with recirculation flow, resulting in an increase in core inlet subcooling (reduced core inlet temperature) and RPV water level. The increase in core inlet subcooling causes a relatively slow power increase and a shift in power distribution toward the bottom of the core. The power increase continues until either the feedwater control system responds to the increase in level by controlling water level or an NMS high neutron flux trip occurs.

A. If an NMS high neutron flux trip does not occur, the reactor will stabilize in a new steady-state operating condition, with feedwater available, at a higher power level until action is taken to secure the HPCI pump and return the plant to a planned operating condition.

B. If an NMS high neutron flux trip occurs, a scram is initiated.

   A high RPV water level trip initiates TSV closure (turbine trip), a trip of the HPCI system, and a trip of the feedwater system to terminate the increase in RPV inventory. The TSV closure initiates a turbine bypass valve opening signal. Depending upon the initial power level and the timing of the turbine trip, the safety relief valves (SRVs) can open to supplement the turbine bypass valves in relieving excess pressure.

An inherent assumption in the safety analysis process is that the pressure regulation system and the turbine bypass system can accommodate the additional steam produced as a result of the power increase (if a scram on NMS high neutron flux does not occur) without significantly increasing RPV pressure.

The inadvertent start of the HPCI pump is possible in operating states C and D (figure 15C-5).

In operating state D, the shutdown required action is dependent upon the magnitude of the NMS neutron flux increase.

A. If an NMS neutron flux trip does not occur, the reactor will stabilize in a new steady-state operating condition.

B. If the NMS neutron flux setpoint is reached, either the IRMs in the STARTUP mode, the APRMs (setdown) in the STARTUP mode, or the APRMs (in the RUN mode) initiate an NMS neutron flux trip signal to the RPS to initiate a scram. The scram results in a high RPV water level, which causes a feedwater system trip, TSV closure, and a HPCI system trip.

The setpoint to open the SRVs may be reached because of the pressure increase resulting from TSV closure.

A. If the SRV high pressure setpoint is not reached, the pressure regulation and turbine bypass systems control RPV pressure.

B. If the SRV high pressure setpoint is reached, the SRVs self actuate to limit the RPV pressure increase.

As a result of the continuing water boiloff following the feedwater system and HPCI system trips, a low RPV water level trip initiates the RCIC and HPCI systems to restore and maintain water level, satisfying initial core cooling requirements. The loss of RHR shutdown cooling (event 4) bounds the required action for long-term core cooling.

RPV isolation is not required for event mitigation.

15C.4.1.1.3 Shutdown Cooling (RHR) Malfunction - Decreasing Temperature (Event 3)

The event description and the safety analysis for the shutdown cooling (RHR) malfunction - decreasing temperature are provided in paragraph 15.2.1.3. The event evaluation is documented in figure 15C-6.

With the plant operating in the RHR shutdown cooling mode, a malfunction can reduce moderator temperature. A decrease in moderator temperature causes a slow insertion of positive reactivity into the core. If the reactor is either critical or near critical, a very slow increase in power level can result.

If the operator does not act to control power level, an NMS high neutron IRM flux scram will terminate the event.

The shutdown cooling malfunction - decreasing temperature event can occur in operating states A, B, and C (figure 15C-6), with RPV pressure less than the shutdown cooling pressure permissive.

If the reactor returns to critical, an NMS IRM high neutron flux signal to the RPS initiates a scram to terminate the power increase.

Because the shutdown cooling system remains in operation throughout the event, no unique requirement for pressure relief or core cooling arises. The normal operating system fulfills these required actions.

RPV isolation is not required for event mitigation.

15C.4.1.2 Increase in Reactor Coolant Temperature

15C.4.1.2.1 Loss of RHR Shutdown Cooling (Event 4)

The event description and the safety analysis for the loss of shutdown cooling are provided in paragraph 15.2.2.1. The event evaluation is documented in figure 15C-7.

The shutdown cooling mode of the RHR system is designed to remove decay heat, at low RPV pressure with the reactor shutdown, at a sufficient rate to maintain cold shutdown conditions. Typically, evaluation of the failure of the RHR shutdown cooling mode demonstrates alternative decay heat removal capability. The majority of components in the shutdown cooling system are redundant; thus, the loss of any single pump or heat exchanger does not significantly affect the continuity of core cooling, although coolant temperature can increase until a new steady-state condition is reached. However, closure of a shutdown cooling suction valve and the inability to reopen it can result in the total loss of shutdown cooling. For the total loss of shutdown cooling, RPV water temperature slowly increases until action is taken to control the temperature increase and reestablish decay heat removal using an alternate decay heat removal path.

In addition, to demonstrate the plant's capability to comply with GDC 34, an evaluation of the unavailability of the RHR shutdown cooling mode following an LOSP from normal operating conditions was performed. For this evaluation, credit is taken only for safety-related equipment. Even though these assumptions change the event frequency, the event is conservatively evaluated as an

AOO. The initial part of the event is identical to the loss of auxiliary power (paragraph 15C.4.1.8.3). Once the event is stabilized, action is taken to control the temperature increase and reestablish decay heat removal using the alternate decay heat removal path. The evaluation results provided in paragraph 15.2.2.2 demonstrate acceptability of the alternate decay heat removal path.

A loss of shutdown cooling can occur in all operating states (figure 15C-7).

The required actions are dependent upon whether or not the plant is initially operating in the shutdown cooling mode and whether or not a loss of ac power is assumed.

A. If the plant is operating in the shutdown cooling mode in operating state C and either a partial or total loss of shutdown cooling occurs, the plant continues in planned operation until a high pressure input into the primary containment and RPV (PC&RPV) isolation control system initiates closure of the shutdown cooling isolation valves. The LOSP path bounds the required action for this path. In operating states A and B, RPV isolation is not required. The extended core cooling path provides the shutdown cooling capability for all states.

B. If the plant is not operating in the shutdown cooling mode, the required actions are dependent upon whether or not an LOSP occurs.

   1. If ac power is available, the plant can continue in planned operation until the cause of the loss of shutdown cooling is repaired.

   2. If an LOSP occurs, the required actions are dependent upon whether or not a high RPV water level trip due to a recirculation pump trip (RPT), or a loss of condenser vacuum due to a loss of the circulating water pumps occurs.

In operating state B, and in operating state D if a scram is not initiated earlier, ultimately the coastdown of the RPS motor-generator (M-G) sets resulting from the loss of ac power (fail-safe design) initiates a scram.

In operating state D:

A. If a high RPV water level trip that initiates a turbine trip occurs, and the initial power level is greater than the turbine first-stage pressure permissive, the

TSV position switches initiate a scram and an end-of-cycle RPT (EOC-RPT).

B. If initial power level is less than the pressure permissive, the TSV position switch scram and the EOC-RPT are bypassed, and the required action is dependent upon the transient signature.

1. If the NMS high neutron flux setpoint is reached, the NMS input into the RPS initiates a scram.

2. If the NMS high neutron flux setpoint is not reached, a scram on high RPV pressure is initiated if the high RPV pressure scram setpoint is reached.

An alternate shutdown path can occur if a low condenser vacuum trip initiates MSIV closure. The low condenser vacuum input into the PC&RPV isolation control system initiates MSIV closure. A low condenser vacuum trip can be manually bypassed if the reactor is not in the RUN mode and the TSVs are < 90% open. In operating state D, MSIV closure in the RUN mode initiates a scram.

In operating states C and D, the SRVs self actuate to limit the RPV pressure increase if the SRV high pressure setpoint is reached.

The core cooling required action is dependent upon whether or not the normal cooling systems are available.

A. If the normal cooling systems are available, the plant continues in planned operation.

B. If the normal cooling systems are not available, a low RPV water level trip automatically initiates the RCIC and HPCI systems to restore and maintain water level, satisfying initial core cooling requirements.

Further action with respect to core cooling is not required if an emergency operating procedure (EOP) entry condition is not reached. Due to SRV, HPCI, and RCIC operation, the suppression pool temperature EOP entry condition may be reached. Consistent with EOP requirements, the suppression pool cooling mode of the RHR system is manually initiated. Depending upon initial plant conditions, suppression pool temperature and level may continue to increase and reach either the heat capacity temperature limit (which is based upon suppression pool temperature and RPV pressure), or the SRV tailpipe limit (which is based upon RPV pressure and suppression pool level). If either limit is reached, manual initiation of the automatic depressurization system (ADS) is required after confirmation of the availability

of the low pressure emergency core cooling system (ECCS) subsystems.

Based upon the RPV water level indication following depressurization and once the RPV pressure permissive is satisfied, either the CS system, in combination with RHR in suppression pool cooling mode, or RHR alternate shutdown cooling is initiated to restore and maintain level. In both of these approaches a flow path is established through an open SRV back to the suppression pool. RHR alternate shutdown cooling is defined in plant procedures as follows. Suction is taken from the suppression pool, the water is cooled via an RHR heat exchanger (residual heat removal service water (RHRSW) system supplies cooling water to the RHR heat exchangers), and the water is supplied to the RPV via the LPCI injection valve lineup. These actions complete the extended core cooling required action.

It should be noted that the extended core cooling path for the loss of RHR shutdown cooling event bounds the extended core cooling path for other events involving turbine trips, generator load rejections, and loss of feedwater or main heat sink. This includes events in which the feedwater system initially provides core cooling but is manually tripped as the result of suppression pool high water level.

15C.4.1.3 Increase in Reactor Pressure

15C.4.1.3.1 Generator Load Rejection With No Bypass (LRNBP) (Event 5)

The event description and the safety analysis for the LRNBP are provided in paragraph 15.2.3.1. The event evaluation is documented in figure 15C-8.

A generator load rejection initiates a TCV fast closure, which causes a sudden reduction in steam flow, resulting in an increase in RPV pressure. The assumed unavailability of the turbine bypass valves increases the severity of the RPV pressure increase, which causes a reduction in core voids and a subsequent increase in neutron flux and surface heat flux. A scram and an EOC-RPT occur on a TCV fast closure signal. The opening of the SRVs limits the RPV pressure increase. The feedwater control system maintains RPV water level.

An LRNBP event can only occur in operating state D, with the main turbine operating (figure 15C-8).

The shutdown required action is dependent upon the initial power level.

A. If the initial power level is greater than the turbine first-stage pressure permissive, a TCV fast closure initiates a scram and an EOC-RPT.

B. If the initial power level is less than the turbine first-stage pressure permissive, the TCV fast closure scram and EOC-RPT are bypassed.

C For initial power levels less than the first-stage pressure permissive, the RPS initiates a scram on either high RPV pressure or an NMS high APRM neutron flux signal.

The SRVs self actuate to limit the RPV pressure increase resulting from TCV closure and the assumed unavailability of the turbine bypass valves.

The feedwater system provides initial core cooling. However, the continuing operation of the SRVs can result in an increase in suppression pool temperature such that an EOP entry condition is reached. The loss of RHR shutdown cooling (event 4) bounds the required action required for long-term core cooling.

RPV isolation is not required for event mitigation.

15C.4.1.3.2 Generator Load Rejection with Bypass (LRBP) (Event 6)

The event description and the safety analysis for the LRBP are provided in paragraph 15.2.3.2. The event evaluation is documented in figure 15C-9.

A generator load rejection initiates a TCV fast closure, which causes a sudden reduction in steam flow, resulting in an increase in RPV pressure. TCV fast closure initiates the opening of the turbine bypass valves, reducing the severity of the pressure increase, which causes a reduction in core voids and a subsequent increase in neutron flux and surface heat flux. A scram and an EOC-RPT occur on a TCV fast closure signal. The combination of opening the turbine bypass valves and the SRVs limits the RPV pressure increase. The feedwater control system maintains RPV water level.

An LRBP event can only occur in operating state D (figure 15C-9), with the main turbine operating.

The shutdown required action is dependent upon the initial power level.

A. If the initial power level is greater than the turbine first-stage pressure permissive, a TCV fast closure initiates a scram and an EOC-RPT.

B. If the initial power level is less than the turbine first-stage pressure permissive, the TCV fast closure scram and EOC-RPT are bypassed, and the required action is dependent upon the transient signature.

1. If the NMS high neutron flux setpoint is reached, the RPS initiates a scram on an NMS high APRM neutron flux signal.

2. If the NMS high neutron flux setpoint is not reached, but the high RPV pressure scram setpoint is reached, the RPS initiates a scram on high RPV pressure.

3. If NMS high neutron flux and the high RPV pressure scram setpoints are not reached, the reactor will stabilize in a new steady-state operating condition until action is taken to return the reactor to a planned operating condition.

The setpoint to open the SRVs may be reached because of the pressure increase resulting from TCV fast closure.

A. If the SRV high pressure setpoint is not reached, the pressure regulation and turbine bypass systems control RPV pressure.

B. If the SRV high pressure setpoint is reached, the SRVs self actuate to limit the RPV pressure increase.

Because the feedwater control, recirculation flow control, pressure regulation, and turbine bypass systems remain in operation throughout the event, no unique requirement for core cooling arises. The normal operating systems fulfill this required action.

RPV isolation is not required for event mitigation.

15C.4.1.3.3 Turbine Trip With No Bypass (TTNBP) (Event 7)

The event description and the safety analysis for the TTNBP event are provided in paragraph 15.2.3.3. The event evaluation is documented in figure 15C-10.

A turbine trip initiates a rapid closure of the TSVs, causing a sudden reduction in steam flow, resulting in an increase in RPV

pressure. The assumed unavailability of the turbine bypass valves increases the severity of the RPV pressure increase, which results in a reduction in core voids and a subsequent increase in the NMS neutron flux and the surface heat flux. The TSV position switches initiate a scram and an EOC-RPT. The opening of the SRVs limits the RPV pressure increase. The feedwater control system maintains RPV water level.

A TTNBP event can only occur in operating state, with the main turbine operating D (figure 15C-10).

The shutdown required action is dependent upon the initial power level.

A. If the initial power level is greater than the turbine first-stage pressure permissive, the TSV position switches initiate a scram and an EOC-RPT.

B. If initial power level is less than the turbine first-stage pressure permissive, the TSV position switch scram and EOC-RPT are bypassed.

C. For initial power levels less than the first-stage pressure permissive, the RPS initiates a scram on either high RPV pressure or an NMS high APRM neutron flux signal.

The SRVs self actuate to limit the RPV pressure increase resulting from the TSV closure and the assumed unavailability of the turbine bypass valves.

The feedwater system provides initial core cooling. However, the continuing operation of the SRVs can result in an increase in suppression pool temperature such that an EOP entry condition is reached. The loss of RHR shutdown cooling (event 4) bounds the required action for long-term core cooling.

RPV isolation is not required for event mitigation.

15C.4.1.3.4 Loss of Condenser Vacuum (Event 8)

The event description and the safety analysis for the loss of condenser vacuum are provided in paragraph 15.2.3.4. The event evaluation is documented in figure 15C-11.

The loss of condenser vacuum, as the vacuum decreases (gauge pressure becomes less negative), sequentially trips the turbine (TSV closure and bypass valve opening), initiates MSIV closure, and closes the turbine bypass valves (initially opened as a result of the turbine trip). Because of the timing of the loss

of condenser vacuum, the short-term event is very similar to the TTBP event (paragraph 15C.4.1.3.5). The long-term event is very similar to the TTNBP event (paragraph 15C.4.1.3.3). The initial plant response and consequences are attributable to turbine bypass system availability. Closure of the MSIVs and turbine bypass valves later in the event affects the longer-term plant response and consequences.

A loss of condenser vacuum can occur only in operating states C and D (figure 15C-11).

In operating state D, the shutdown required action is dependent upon the initial power level.

A. If the initial power level is greater than the turbine first-stage pressure permissive, a low condenser vacuum trip sequentially trips the turbine, resulting in a TSV closure, which initiates a scram and an EOC-RPT.

B. If the initial power level is less than the turbine first-stage pressure permissive, the TSV position switch scram and EOC-RPT are bypassed, and the required action is dependent upon the transient signature.

   1. If the NMS high neutron flux setpoint is reached, either the IRMs in the STARTUP mode, the APRMs (setdown) in the STARTUP mode, or the APRMs (in the RUN mode) initiate an NMS neutron flux trip signal to the RPS to initiate a scram.

   2. If the NMS high neutron flux and the RPV high pressure scram setpoints are not reached, the reactor will stabilize in a new steady-state operating condition until action is taken to return the reactor to a planned operating condition.

   3. If the NMS high neutron flux setpoint is not reached, but the high RPV pressure scram setpoint is reached, the RPS initiates a scram on high RPV pressure.

If a low condenser vacuum trip occurs, MSIV closure isolates the RPV. The low condenser vacuum input into the PC&RPV isolation control system initiates MSIV closure. A low condenser vacuum trip can be manually bypassed if the reactor is not in the RUN mode and the TSVs are < 90% open. In operating state D, an alternate shutdown path is established by closing the MSIVs in the RUN mode to initiate a scram.

The setpoint to open the SRVs may be reached because of the pressure increase resulting from TSV closure.

A. If the SRV high pressure setpoint is not reached, the pressure regulation and turbine bypass systems control RPV pressure.

B. If the SRV high pressure setpoint is reached, the SRVs self actuate to limit the RPV pressure increase.

If the MSIVs are closed as a result of the loss of condenser vacuum, the steam supply to the turbine-driven feedwater pumps is lost. The continuing water boiloff attributable to the RPV decay heat results in a low RPV water level trip setpoint for the initiation of the RCIC and HPCI systems to restore and maintain water level, satisfying initial core cooling requirements. The loss of RHR shutdown cooling (event 4) bounds the required action for long-term core cooling.

If the MSIVs are not closed, the normal operating systems provide core cooling.

15C.4.1.3.5 Turbine Trip With Bypass (TTBP) (Event 9)

The event description and the safety analysis for the TTBP event are provided in paragraph 15.2.3.5. The event evaluation is documented in figure 15C-12.

A turbine trip initiates a rapid closure of the TSVs, causing a sudden reduction in steam flow, resulting in an increase in RPV pressure, which causes a reduction in core voids and a subsequent increase in the NMS neutron flux and the surface heat flux. The TSV position switches, which are part of the RPS, initiate a scram and an EOC-RPT. The combination of opening the turbine bypass valves and the SRVs limits the RPV pressure increase. The feedwater control system maintains RPV water level.

A TTBP event can only occur in operating state D (figure 15C-12), with the main turbine operating.

The shutdown required action is dependent upon the initial power level.

A. If the initial power level is greater than the turbine first-stage pressure permissive, the TSV position switches initiate a scram and an EOC-RPT.

B. If the initial power level is less than the turbine first-stage pressure permissive, the TSV position

switch scram and EOC-RPT are bypassed, and the required action is dependent upon the transient signature.

1. If the NMS high neutron flux setpoint is reached, the RPS initiates a scram on an NMS high APRM neutron flux signal.

2. If the NMS high neutron flux setpoint is not reached, but the high RPV pressure scram setpoint is reached, the RPS initiates a scram on high RPV pressure.

3. If the NMS high neutron flux and the high RPV pressure scram setpoints are not reached, the reactor will stabilize in a new steady-state operating condition until action is taken to return the reactor to a planned operating condition.

The setpoint to open the SRVs may be reached because of the pressure increase resulting from TSV closure.

A. If the SRV high pressure setpoint is not reached, the pressure regulation and turbine bypass systems control RPV pressure.

B. If the SRV high pressure setpoint is reached, the SRVs self actuate to limit the RPV pressure increase.

Because the feedwater control, recirculation flow control, pressure regulation, and turbine bypass systems remain in operation throughout the event, no unique requirement for core cooling arises. The normal operating systems fulfill this required action.

RPV isolation is not required for event mitigation.

15C.4.1.3.6 Closure of All MSIVs (MSIVD) (Event 10)

The event description and the safety analysis for the MSIVD event are provided in paragraph 15.2.3.6. The event evaluation is documented in figure 15C-13.

The MSIVD event causes a rapid reduction in steam flow, resulting in an increase in RPV pressure. The RPV pressure increase results in a reduction in core voids and a subsequent increase in neutron flux and, depending upon the timing of scram, an increase in surface heat flux.

The MSIVD event can only occur in operating states C and D (figure 15C-13). In operating states A and B, the MSLs are continuously isolated. Isolation of all MSLs is most severe in operating state D during power operation.

In operating state D, the shutdown required action is dependent upon the position of the mode selector switch.

A. If the mode selector switch is in the RUN mode, the MSIV position switches initiate a scram.

B. If the mode selector switch is in the STARTUP mode, and the NMS high neutron flux setpoint is reached, either the IRMs or the APRMs (setdown) initiate an NMS neutron flux trip signal to the RPS to initiate a scram.

C. If the NMS high neutron flux setpoint is not reached, but the high RPV pressure scram setpoint is reached, the RPS initiates a scram on high RPV pressure.

D. If the NMS high neutron flux and the RPV high pressure scram setpoints are not reached, the reactor will stabilize in a new steady-state operating condition until action is taken to return the reactor to a planned operating condition.

The setpoint to open the SRVs may be reached, except when the event is initiated from very low power levels.

A. If the SRV high pressure setpoint is not reached, heat losses from the system may be sufficient to limit any pressure increase.

B. If the SRV high pressure setpoint is reached, the SRVs self actuate to limit the pressure increase.

As a result of MSIV closure, the steam supply to the turbine-driven feedwater pumps is lost. The continuing water boiloff attributable to RPV decay heat results in a low RPV water level trip for the initiation of the RCIC and HPCI systems, which are automatically initiated to restore and maintain water level, satisfying initial core cooling requirements. The loss of RHR shutdown cooling (event 4) bounds the required action for long-term core cooling.

If a low RPV water level trip does not occur, the normal operating systems provide core cooling.

The MSLs are isolated as part of the event definition, and isolation of other systems is not required.

15C.4.1.3.7 Closure of One MSIV (Event 11)

The event description and the safety analysis for the closure of one MSIV are provided in paragraph 15.2.3.7. The event evaluation is documented in figure 15C-14.

Closure of a single MSIV causes a slight reduction in steam flow, resulting in a small increase in RPV pressure, which causes an increase in neutron flux attributable to the reduction in moderator voids. The plant is designed so that closure of a single MSIV does not initiate a scram from the MSIV position scram logic. This situation occurs, because the MSIV position scram trip logic is designed to accommodate single-valve operation and testability during normal reactor power operation at limited power levels. However, if the flux increase is great enough, the NMS initiates a scram on NMS high neutron flux. During this event, the pressure regulation system controls RPV pressure, and the feedwater control system maintains water level.

Closure of one MSIV can occur only in operating states C and D (figure 15C-14). In operating states A and B, the main steam lines (MSLs) are continuously isolated.

Depending upon the magnitude of the flux increase, an APRM-initiated neutron flux trip can occur.

A. If a flux trip occurs, the NMS flux trip input into the RPS initiates a scram.

B. If an NMS flux trip does not occur, the reactor will stabilize in a new steady-state operating condition until necessary action is taken to return the reactor to a planned operating condition.

Because the feedwater control, recirculation flow control, pressure regulation, and turbine bypass systems remain in operation throughout the event, no unique requirement for core cooling or pressure relief arises.

RPV isolation is not required for event mitigation.

15C.4.1.3.8 Pressure Regulator Failure - Closed (Event 12)

The event description and the safety analysis for the pressure regulator failure - closed are provided in paragraph 15.2.3.8. The event evaluation is documented in figure 15C-15.

In the plant design, two identical pressure regulators are provided for pressure control. For failure modes in the

controlling pressure regulator to the closed position, the backup pressure regulator assumes control of the TCVs.

During normal operation, both pressure regulators are assumed to be available.

A pressure regulator failure - closed event can only occur in operating state D, with the main turbine operating (figure 15C-15).

No unique required actions are necessary, because no protective system intervention is required due to the effectiveness of the backup pressure regulator. This stabilized condition will continue until action is taken to return the reactor to a planned operating condition. As a result, shutdown and RPV isolation are not required, and the normal operating systems, including feedwater control, recirculation flow control, backup pressure regulation, and turbine bypass, accomplish the pressure relief and core cooling functions.

RPV isolation is not required for event mitigation.

15C.4.1.4 Decrease in Reactor Coolant Flow Rate

15C.4.1.4.1 Trip of One Recirculation Pump (Event 13)

The event description and the safety analysis for the trip of one recirculation pump are provided in paragraph 15.2.4.1. The event evaluation is documented in figure 15C-16.

The trip of one recirculation pump causes a decrease in core flow and a subsequent decrease in power level because of the increase in core voids. RPV water level increases due to the recirculation flow reduction and subsequent increase in voids, but is not expected to reach the RPV high water level trip.

Following the trip of one recirculation pump, the reactor is expected to stabilize in a new steady-state operating condition at a lower power and flow condition (single-loop operation). It should be noted that, if a high RPV water level trip occurs, the event is similar to the trip of both recirculation pumps.

The trip of one recirculation pump is considered in operating states C and D, but is significant only in operating state D (figure 15C-16), with the reactor critical and operating at a significant power level.

No unique required actions are necessary for this event, because no protective system intervention is required. The reactor will

continue in single-loop operation until action is taken to return the reactor to a planned operating condition. As a result, reactor shutdown and RPV isolation are not required, and the normal operating systems, including feedwater control, pressure regulation, and turbine bypass, accomplish core cooling and pressure relief functions. (If the plant is initially operating in single-pump operation, see paragraph 15C.4.1.4.2 below for long-term requirements.)

15C.4.1.4.2 Trip of Two Recirculation Pumps (Event 14)

The event description and the safety analysis for the trip of two recirculation pumps are provided in paragraph 15.2.4.2. The event evaluation is documented in figure 15C-17.

Tripping the recirculation pumps causes a rapid decrease in core flow and a subsequent decrease in power level because of the increase in core voids. RPV water level swells as the result of the void generation, and may reach the RPV high water level trip setpoint. A high RPV water level trip initiates a turbine trip (TSV closure) and a trip of the feedwater system to terminate the increase in RPV water level. TSV closure also initiates a scram and turbine bypass valve opening signal, which opens the turbine bypass valves. Following the turbine trip, the NMS neutron flux increase is limited by the increase in core voids due to the lower core flow, Doppler feedback, and scram. Opening the SRVs and the turbine bypass valves limits the RPV pressure increase. Operation of the HPCI and RCIC systems maintains RPV water level.

The trip of two recirculation pumps is considered in operating states C and D, but is significant only in operating state D (figure 15C-17), with the reactor critical and operating at a significant power level.

In operating state D, the required actions are dependent upon whether or not a high RPV water level trip occurs.

A. If a high RPV water level trip does not occur, the reactor will stabilize in a new steady-state operating condition. The feedwater control, pressure regulation, and turbine bypass systems remain in operation throughout the event, and no unique requirement for pressure relief or core cooling arises. The normal operating systems fulfill these required actions. If either one or both of the pumps cannot be restarted, the Technical Specifications require a reactor shutdown.

B. If a high RPV water level trip occurs, a turbine trip and a feedwater system trip are initiated, and the

shutdown required action is dependent upon the initial power level.

1. If the initial power level is greater than the turbine first-stage pressure permissive, a TSV closure initiates a scram and an EOC-RPT.

2. If the initial power level is less than the turbine first-stage pressure permissive, the TSV position switch scram and EOC-RPT are bypassed, and the required action is dependent upon the transient signature.

   a. If the NMS high neutron flux setpoint is reached, the RPS initiates a scram on an NMS high APRM neutron flux signal.

   b. If the NMS high neutron flux setpoint is not reached, but the high pressure scram setpoint is reached, the RPS pressure switches initiate a scram on high RPV pressure.

   c. If the NMS high neutron flux and the high RPV pressure scram setpoints are not reached, the Technical Specifications require a reactor shutdown.

The setpoint to open the SRVs may be reached because of the pressure increase resulting from TSV closure.

A. If the SRV high pressure setpoint is not reached, the pressure regulation and turbine bypass systems control RPV pressure.

B. If the SRV high pressure setpoint is reached, the SRVs self actuate to limit the RPV pressure increase.

As a result of the continuing water boiloff following the feedwater system trip, a low RPV water level trip initiates the RCIC and HPCI systems to restore and maintain water level, satisfying initial core cooling requirements. The loss of RHR shutdown cooling (event 4) bounds the required action for long-term core cooling.

RPV isolation is not required for event mitigation.

15C.4.1.4.3 Recirculation Flow Control Failure - Decreasing Flow (Event 15)

The event description and the safety analysis for the recirculation flow control failure - decreasing flow are provided in paragraph 15.2.4.3. The event evaluation is documented in figure 15C-18.

A recirculation flow control failure - decreasing flow causes a decrease in power level because of the increase in core voids. RPV water level increases as the result of void generation, but is not expected to reach the RPV high water level trip. Following a recirculation flow control failure - decreasing flow, the reactor is expected to stabilize in a new steady-state operating condition at a lower power and flow condition until action is taken to return the reactor to a planned operating condition. It should be noted that, if a high RPV water level trip occurs, the event would be similar to, but less severe than, the trip of both recirculation pumps.

The recirculation flow control failure - decreasing flow event is considered only in operating state D (figure 15C-18), because the feedwater flow interlock limits the recirculation pump speed to a minimum below a preestablished value of feedwater flow that is attainable only in power operation.

No unique required actions are necessary for this event, because no protective system intervention is required. As a result, reactor shutdown and RPV isolation are not required, and the normal operating systems, including feedwater control, pressure regulation, and turbine bypass, accomplish core cooling and pressure relief functions.

15C.4.1.5 Increase in Reactor Coolant Flow Rate

15C.4.1.5.1 Recirculation Flow Controller Failure - Increasing Flow (Event 16)

The event description and the safety analysis for the recirculation flow control failure - increasing flow are provided in paragraph 15.2.5.1. The event evaluation is documented in figure 15C-19.

An increase in recirculation flow causes an increase in core flow, which in turn, results in an increase in core power and shifts the power distribution toward the top of the core. The rate and magnitude of the power increase are dependent upon the rate and magnitude of the recirculation flow increase.

Recirculation system flow controls limit the magnitude of the flow increase.

Two types of recirculation flow controller failure - increasing flow events are considered:

- The most rapid flow increase in either a single loop or both loops resulting in scram intervention on NMS high neutron flux.
- A slow recirculation flow increase that does not result in a scram.

For the rapid flow increase case, the relatively fast increase in neutron flux is terminated by a scram, which limits the energy input to the fuel, and the effect of the fuel time constant is to limit the change in surface heat flux.

An inherent assumption the safety analysis process is that there is sufficient capability in the pressure regulation or turbine bypass system to accommodate the additional steam produced as a result of the power increase without a significant increase in RPV pressure.

A recirculation flow control failure causing an increase in recirculation flow applies only in operating state D (figure 15C-19), because the feedwater flow interlock limits the recirculation pump speed to a minimum below a preestablished value of feedwater flow that is attainable only in power operation. The event evaluation is documented in figure 15C-19. for this event.

Depending upon the magnitude of the flow and subsequent power increase, an APRM-initiated neutron flux trip may initiate a scram. If a flux trip does not occur, the reactor will stabilize in a new steady-state operating condition until action is taken to restore the reactor to a planned operating condition.

Because the feedwater control, pressure regulation, and turbine bypass systems remain in operation throughout the event, no unique requirement for pressure relief or core cooling arises. The normal operating systems fulfill these required actions.

RPV isolation is not required for event mitigation.

15C.4.1.5.2 Startup of Idle Recirculation Pump (Event 17)

The event description and the safety analysis for the startup of an idle recirculation pump are provided in paragraph 15.2.5.2. The event evaluation is documented in figure 15C-20.

The startup of an idle recirculation pump is intended to represent the spectrum of AOOs that can result from the inadvertent starting of a recirculation loop within the temperature limitation of the Technical Specifications. The startup of a cold recirculation loop increases core flow and causes a decrease in core inlet subcooling. The net effect of the startup of a cold recirculation loop event is an increase in power, a power distribution shift, and a decrease in sensed water level. Following the initial transient, the reactor stabilizes in a new steady-state operating condition.

The startup of an idle recirculation pump is considered in operating states C and D, but is significant only in operating state D (figure 15C-20), with the reactor critical and operating at a significant power level.

Depending upon the magnitude of the flow and subsequent power increase, an APRM-initiated neutron flux trip may occur. If a flux trip occurs, the NMS initiates a scram. If a flux trip does not occur, the reactor will stabilize in a new steady-state operating condition until action is taken to restore the reactor to a planned operating condition.

Because the feedwater control, pressure regulation, and turbine bypass systems remain in operation throughout the event, no unique requirement for pressure relief or core cooling arises. The normal operating systems fulfill these required actions.

RPV isolation is not required for event mitigation.

15C.4.1.6 Reactivity and Power Distribution Anomalies

15C.4.1.6.1 Control Rod Withdrawal Error (All Power Levels) (Event 18)

The event description and the safety analysis for the control rod withdrawal error are provided in paragraph 15.2.6.1. The event evaluation is documented in figure 15C-21.

The RWE results in positive reactivity insertion. Both the core average power and the local power in the vicinity of the control rod increase. The core average and local power increases continue until the rod block monitor (RBM) acts to inhibit

further withdrawal, a scram occurs, or the control rod reaches its fully withdrawn position. The normal operating systems control any change to the reactor operating parameters. The two different conditions considered are the RWE at high power and the RWE in the STARTUP Mode.

Because an RWE results in an insertion of positive reactivity, it can occur under any operating condition and must be considered in all operating states (figure 15C-21).

No unique action is required in operating states A and C, because the core is more than one rod subcritical, and the complete withdrawal of the maximum-worth control rod is not sufficient to reach criticality. In operating states B and D, the required actions are dependent upon the initial power level.

In operating state B or D, in the STARTUP mode, the withdrawal of a high-worth control rod may cause a flux increase sufficient to initiate a scram on NMS high neutron flux from either the IRMs or the APRMs (setdown). If neither an IRM nor an APRM NMS high neutron flux trip occurs, the reactor will stabilize in a new steady-state operating condition until action is taken to restore the reactor to a planned operating condition.
In operating state D, with the initial power level above the low-power setpoint of the RBM, the sequence of events is dependent upon whether or not an NMS high neutron flux trip is encountered.

A. If a flux trip is encountered, the RBM initiates a control rod withdrawal block to terminate control rod withdrawal.

B. If a flux trip does not occur, the reactor will stabilize in a new steady-state operating condition.

In either case, steady-state operation continues until action is taken to restore the reactor to a planned operating condition.

Because the feedwater control, recirculation flow control, pressure regulation, and turbine bypass systems remain in operation throughout the event, no unique requirement for pressure relief or core cooling arises. The normal operating systems fulfill these required actions.

RPV isolation is not required for event mitigation.

15C.4.1.6.2 Control Rod Removal Error During Refueling (Event 19)

The event description and the safety analysis for the control rod removal error during refueling are provided in paragraph 15.2.6.2. The event evaluation is documented in figure 15C-22.

The nuclear characteristics of the core assure the reactor is subcritical in its most reactive condition with the most reactive control rod fully withdrawn during the refueling process. When the mode switch is in REFUEL, no more than one control rod can be withdrawn. Therefore, the refueling interlocks prevent any condition that could lead to an inadvertent criticality attributable to control rod removal during refueling.

The control rod removal error during refueling is applicable in operating state A (figure 15C-22).

No unique required actions are necessary for this event, because no protective system intervention is required. The reactor is shutdown and remains shutdown throughout the event. The normal operating RHR shutdown cooling system accomplishes the core cooling function.

RPV isolation and pressure relief are not required for event mitigation.

15C.4.1.6.3 Fuel Assembly Insertion Error During Refueling (Event 20)

The event description and the safety analysis for the fuel assembly insertion error during refueling are provided in paragraph 15.2.6.3. The event evaluation is documented in figure 15C-23.

The amount of reactivity in a single erroneously loaded fuel assembly during the refueling process is insufficient to cause an inadvertent criticality.

The fuel assembly insertion event is applicable in operating state A (figure 15C-23).

No unique required actions are necessary for this event, because no protective system intervention is required. The reactor is shut down and remains shutdown throughout the event. The normal operating RHR shutdown cooling system accomplishes the core cooling function.

RPV isolation and pressure relief is not required for event mitigation.

15C.4.1.7 Increase in Reactor Coolant Inventory

15C.4.1.7.1 Feedwater Controller Failure - Maximum Demand (Event 21)

The event description and the safety analysis for the feedwater controller failure - maximum demand are provided in paragraph 15.2.7.1. The event evaluation is documented in figure 15C-24.

This event represents a combination of a coolant temperature reduction event and a rapid pressurization event. As a result of the increased feedwater flow mixing with the essentially constant recirculation flow, a gradual increase in core inlet subcooling (reduced core inlet temperature) results. The increased feedwater flow also results in an increase in RPV water level because of the steam and feedwater flow mismatch.

The gradual increase in core inlet subcooling causes a relatively slow power increase and a shift in power distribution towards the bottom of the core. The power increase continues until the RPV high water level trip setpoint is reached.

RPV high water level initiates turbine trip (TSV closure) for equipment protection purposes and a trip of the feedwater system to terminate the increase in RPV inventory. The TSV closure initiates a scram and an EOC-RPT. The turbine trip initiates opening of the turbine bypass valves. Following the turbine trip, Doppler feedback, the EOC-RPT, and the scram limit the increase in neutron flux. The RPV pressure increase is limited by opening the SRVs and is controlled by the turbine bypass system. Operation of either the HPCI or the RCIC system maintains RPV water level.

Because the plant has turbine-driven feedwater pumps, a feedwater controller failure causing an excess RPV coolant inventory is only possible in operating state D (figure 15C-24).

As a result of the increase in RPV water inventory resulting from the increase in feedwater flow, a high RPV water level trip occurs, causing a turbine trip and a feedwater system trip. The required actions are dependent upon the conditions associated with these trips.

The shutdown required action is dependent upon the initial power level.

A. If the initial power level is greater than the turbine first-stage pressure permissive, the TSV position switches initiate a scram and an EOC-RPT.

B. If the initial power level is less than the turbine first-stage pressure permissive, the TSV position switch scram and EOC-RPT are bypassed, and the required action is dependent upon the transient signature.

1. If the NMS high neutron flux setpoint is reached, the RPS initiates a scram on an NMS high APRM neutron flux signal.

2. If the NMS high neutron flux setpoint is not reached, but the high RPV pressure scram setpoint is reached, the RPS initiates a scram on high RPV pressure.

3. If the NMS high neutron flux and the high RPV pressure setpoints are not reached, the reactor will stabilize in a new steady-state operating condition until action is taken to restore the reactor to a planned operating condition.

The setpoint to open the SRVs may be reached because of the pressure increase resulting from TSV closure.

A. If the SRV high pressure setpoint is not reached, the pressure regulation and turbine bypass systems control RPV pressure.

B. If the SRV high pressure setpoint is reached, the SRVs self actuate to limit the RPV pressure increase.

As a result of the continuing water boiloff following the feedwater system and HPCI system trips, a low RPV water level trip initiates the RCIC and HPCI systems to restore and maintain water level, satisfying initial core cooling requirements. The loss of RHR shutdown cooling (event 4) bounds the required action for long-term core cooling.

RPV isolation is not required for event mitigation.

15C.4.1.8 Decrease in Reactor Coolant Inventory

15C.4.1.8.1 Inadvertent Opening of an SRV (Event 22)

The event description and the safety analysis for the inadvertent opening of an SRV are provided in paragraph 15.2.8.1. The event evaluation is documented in figure 15C-25.

The opening of an SRV provides a path for steam discharge to the suppression pool. The sudden increase in steam flow from the RPV causes a mild depressurization, leading to a slight reduction in power level, and the steam discharged to the suppression pool causes a suppression pool temperature increase. The normal control systems respond to the RPV pressure and level decreases to stabilize the reactor at a new steady-state operating condition. To limit the temperature rise, the operator responds to the suppression pool temperature increase in accordance with the EOPs.

The inadvertent opening of one SRV event is considered in operating states C and D, with the reactor pressurized (figure 15-25).

For this event, planned operation continues until the EOP entry condition on suppression pool temperature is reached. The remainder of the event is dependent upon plant conditions encountered and operator response to the EOPs.

In operating state D, the suppression pool temperature continues to increase until the temperature limit is reached requiring manual initiation of a scram. Based upon the suppression pool temperature indication, the operator manually initiates a scram.

For this event, feedwater is assumed to be available to provide initial core cooling. As a result of the steam transferred to the suppression pool through the stuck-open SRV, suppression pool temperature increases until the operator manually initiates the suppression pool cooling mode of RHR. The remainder of the event is dependent upon the plant conditions encountered and operator response to the EOPs. The suppression pool temperature and level can increase and reach the heat capacity temperature limit (which is based upon RPV pressure and suppression pool temperature) or the SRV tailpipe limit (which is based upon RPV pressure and suppression pool level). If either limit is reached, manually initiated RPV depressurization is required. Manual ADS initiation can depressurize the RPV, and the core cooling required action becomes dependent upon the availability of the RHR shutdown cooling system.

A. If the shutdown cooling mode of RHR is available when the reactor is depressurized to below the shutdown cooling pressure permissive, the shutdown cooling mode of the RHR system is manually initiated in accordance with plant operating procedures.

B. If the shutdown cooling mode of the RHR system is not available, the feedwater system continues to provide the initial core cooling water supply until the increase in suppression pool level, as indicated by the suppression pool level monitors, reaches the suppression pool level limit, requiring a trip of the feedwater system. The operator trips the feedwater system, and RPV water level decreases until a low RPV water level condition is reached. Based upon the low water signal and once the RPV pressure permissive is satisfied, the operator initiates either the CS system, in combination with RHR suppression pool cooling, or RHR alternate shutdown cooling to restore and maintain water level (paragraph 15C.4.1.2.1).

Because this event results in a decrease in RPV pressure, no unique requirement for pressure relief arises. This required action is fulfilled either by the normal operating systems or through the stuck-open SRV.

RPV isolation is not required for event mitigation.

15C.4.1.8.2 Pressure Regulator Failure - Open (Event 23)

The event description and the safety analysis for the pressure regulator failure - open are provided in paragraph 15.2.8.2. The event evaluation is documented in figure 15C-26.

Failure of the controlling or backup pressure regulator causes increase in steam flow and initially results in an RPV depressurization, a level increase, and a coolant inventory decrease. During the initial depressurization, power level decreases and water level increases as a result of the additional void generation. The feedwater control system reduces feedwater flow in an attempt to limit the water level increase.

A. If the water level rise is large enough, the RPV high water level trip setpoint is reached, thereby initiating a turbine trip (TSV closure) for equipment protection purposes and a trip of the feedwater system to terminate the increase in RPV inventory. The TSV closure also initiates a scram and an EOC-RPT. The turbine trip initiates opening of the turbine bypass valves. Following the turbine trip, Doppler feedback,

the EOC-RPT, and the scram limit the NMS neutron flux increase.

B. If the steam line pressure decrease is large enough with the reactor in the RUN mode, the low MSL pressure trip setpoint is reached, thereby initiating MSIV closure. If the MSIVs close, operation of the SRVs limits the RPV pressure increase. If feedwater is lost, either HPCI or RCIC system operation maintains RPV water level.

The pressure regulator failure - open is considered in operating states C and D (figure 15-26).

Depending upon the magnitude of the level swell, a high RPV water level trip can occur. Also, depending upon the magnitude of the depressurization, if operating in the RUN mode, a low MSL pressure trip can occur. The required actions are dependent upon whether or not these trips occur.

If neither a high RPV water level nor a low MSL pressure trip in the RUN mode occurs, the reactor will stabilize in a new steady-state operating condition. Feedwater control remains in operation throughout the event, and no unique requirement for pressure relief or core cooling arises. The normal operating systems fulfill these required actions. Reactor shutdown and RPV isolation are not required.

In operating state D, the shutdown required action is dependent upon the specific trips encountered.

A. If a high RPV water level trip occurs during the event, the effects are expected to precede MSIV closure and the shutdown required action is dependent upon the initial power level.

1. If the initial power level is greater than the turbine first-stage pressure permissive, the TSV position switches initiate a scram and an EOC-RPT.

2. If the initial power level is less than the turbine first-stage pressure permissive, the TSV position switch scram and EOC-RPT are bypassed, and the required action is dependent upon the transient signature.

a. If the NMS high neutron flux setpoint is reached, the RPS initiates a scram on an NMS high APRM neutron flux signal.

b. If the NMS high neutron flux setpoint is not reached, but the high RPV pressure scram setpoint is reached, the RPS initiates a scram on high RPV pressure.

c. If the NMS high neutron flux and the high RPV pressure scram setpoints are not reached, the reactor will stabilize in a new steady-state operating condition until action is taken to return the reactor to a planned operating condition.

B. If a low MSL pressure trip in the RUN mode occurs, the MSIV position switches initiate a scram if one has not occurred and isolation of other systems is not required.

C. If low pressure in the RUN mode does not occur during the event, RPV isolation is not required.

The setpoint to open the SRVs may be reached because of the pressure increase resulting from either TSV or MSIV closure.

A. If the SRV high pressure setpoint is not reached, the pressure regulation and turbine bypass systems control RPV pressure.

B. If the SRV high pressure setpoint is reached, the SRVs self actuate to limit the RPV pressure increase.

If the turbine-driven feedwater pumps are lost due to either a high RPV water level trip or MSIV closure, resulting in the continuing water boiloff following a loss of the feedwater system, a low RPV water level trip setpoint for RCIC and HPCI initiation is reached. The RCIC and HPCI systems are automatically initiated to restore and maintain water level, satisfying initial core cooling requirements. The loss of RHR shutdown cooling (event 4) bounds the required action for long-term core cooling.

15C.4.1.8.3 Loss of Auxiliary Power (Event 24)

The event description and the safety analysis for the loss of auxiliary power are provided in paragraph 15.2.8.3. The event evaluation is documented in figure 15C-27.

The loss of auxiliary power covers both the loss of all auxiliary power and the loss of all grid connections.

A. The loss of all auxiliary power during power operation results in MSIV closure, a trip of the recirculation pumps, and the loss of condenser cooling water with a subsequent loss of condenser vacuum. The event is very similar to the loss of condenser vacuum event (paragraph 15C.4.1.3.4), but somewhat less severe from the challenge to event limits because of the initial trip of the recirculation pumps. The differences in system requirements are attributable to:

- The potential for a high RPV water level trip resulting from the level swell following the trip of the recirculation pumps.
- The loss of feedwater flow (LOFW).
- The reactor scram following the high RPV water level trip or MSIV closure.

Following MSIV closure, operation of the SRVs limits the pressure increase, and operation of the HPCI and RCIC systems maintains RPV water level.

B. The loss of all grid connections is identical to the generator load rejection with bypass (LRBP) event (paragraph 15C.4.1.3.2).

A loss of auxiliary power can occur in all operating states (figure 15-27). It should be noted that the loss of RHR shutdown cooling (event 4) bounds the loss of auxiliary power in the shutdown cooling mode and the required actions for the shutdown cooling mode are not shown on figure 15C-27.

In operating state D, the shutdown required action is highly dependent upon the event signature.

A. If the plant is operating at a significant power level and loss of auxiliary power resulting from a loss of the offsite grid, generator load rejection occurs.

B. If the initial power level is greater than the turbine first-stage pressure permissive, a TCV fast closure initiates a scram and an EOC-RPT.

C. If a generator load rejection does not occur or the initial power level is less than the turbine first-stage pressure permissive, the required action is dependent upon whether or not a high RPV water level trip occurs.

1. If a high RPV water level trip occurs, the shutdown required action is also dependent upon the initial power level.

   a. If the initial power level is greater than the turbine first-stage pressure permissive, the TSV position switches initiate a scram and an EOC-RPT.

   b. If power level is less than the turbine first-stage pressure permissive, the TSV position switch scram is bypassed, and the required action is dependent upon the transient signature.

      1) If the NMS high neutron flux setpoint is reached, the RPS initiates a scram on an NMS high APRM neutron flux signal.

      2) If the NMS high neutron flux setpoint is not reached, but the high RPV pressure setpoint is reached, a scram is initiated.

2. If either the high RPV pressure scram setpoint is not reached or a high RPV water level trip does not occur, and the low RPV water level scram setpoint is reached, a scram is initiated on low RPV water level.

3. If no scram trip setpoint is reached, a scram (fail-safe design) is initiated following loss of the RPS power supply (coastdown of the RPS M-G set).

An alternate shutdown path on either low condenser vacuum or a loss of power (RPS power supply) can occur. The low condenser vacuum input into the PC&RPV isolation control system initiates MSIV closure. A low condenser vacuum trip can be manually bypassed if the reactor is not in the RUN mode and the TSVs are < 90% open. In operating state D, an alternate shutdown path is established by closing the MSIVs in the RUN mode to initiate a scram.

If a low condenser vacuum trip does not occur, the loss of the RPS power supply results in the fail-safe MSIV closure.

The setpoint to open the SRVs may be reached because of the pressure increase resulting from either TSV or MSIV closure.

A. If the SRV high pressure setpoint is not reached, pressure relief is not required.

B. If the SRV high pressure setpoint is reached, the SRVs self actuate to limit the RPV pressure increase.

As a result of the LOFW event, the low RPV water level trip setpoint for the initiation of the HPCI and RCIC systems is reached. The RCIC and HPCI systems are automatically initiated to restore and maintain water level, satisfying initial core cooling requirements. The loss of RHR shutdown cooling (event 4) bounds the required action for long-term core cooling.

15C.4.1.8.4 Loss of Feedwater Flow (LOFW) (Event 25)

The event description and the safety analysis for the LOFW event are provided in paragraph 15.2.8.4. The event evaluation is documented in figure 15C-28.

The LOFW event initially is a mild depressurization event with a level decrease. The continuing level decrease causes a scram and the initiation of the RCIC and HPCI systems to restore and maintain water level. The event consequences are primarily dependent upon initial operating conditions.

Because the plant has turbine-driven feedwater pumps, an LOFW is possible only in operating state D (figure 15-28).

A scram on low RPV water level is initiated.

As a result of the continuing decrease in water level resulting from the LOFW, the low RPV water level trip setpoint for the initiation of the HPCI and RCIC systems is reached. Because of continued HPCI or RCIC system operation and continued suppression pool heating and level increase, the reactor may require operator initiated depressurization in accordance with the EOPs to assure continuity of long-term core cooling. The loss of RHR shutdown cooling (event 4) bounds this part of the required action for long-term core cooling.

Because the pressure regulation and turbine bypass systems remain in operation throughout the event, no unique requirement for pressure relief arises. The normal operating systems fulfill this required action.

RPV isolation is not required for event mitigation.

15C.4.2 ACCIDENTS

15C.4.2.1 Control Rod Drop Accident (CRDA) (Event 31)

The event description and the safety analysis for the CRDA are provided in subsection 15.3.2. The event evaluation is documented in figure 15C-29.

The dropping of a high-worth control rod results in a high local reactivity increase in a small region of the core and, for a large, loosely coupled core, significant shifts in spatial power generation. Doppler, void, and moderator reactivity limit the initial rapid power increase. Final shutdown is achieved by an NMS high neutron flux-initiated scram of all control rods, except for the dropped control rod. For the limiting case, fuel failure is predicted to occur as a consequence of this accident.

The CRDA, initiated from a critical condition at a very low power level with the banked position withdrawal sequence (BPWS) limiting control rod pattern represents the most severe challenge to the event acceptance limits. Core design, BPWS implementation, and the control rod velocity limiter limit the rate of reactivity addition. The rod worth minimizer, which is a normal operating system that restricts control rod withdrawal at low power levels, enforces adherence to the BPWS. For postulated failures of the CRD housing, the CRD housing supports stop rod ejection.

For the limiting case, the reactor is assumed to be at a low power level discharging steam to the main condenser, with the mechanical vacuum pump in operation. The mechanical vacuum pump is assumed to be tripped due to high MSL radiation, and the radiological exposure is based on leakage from the main condenser. However, for the evaluation of the event in the cold condition, reactor conditions are consistent with shutdown cooling being in operation.

The CRDA is significant only in operating states B and D, with the reactor critical (figure 15-29).

No required actions are necessary in operating states A and C, because the reactor is more than one rod subcritical.

For any significant control rod drop, a flux trip occurs, and the NMS flux trip signal to the RPS initiates a scram.

The high pressure setpoint to open the SRVs may be reached because of the pressure increase.

A. If the SRV high pressure setpoint is not reached, either the pressure regulation and turbine bypass systems, or the shutdown cooling system control RPV pressure.

B. If the SRV high pressure setpoint is reached, the SRVs self actuate to limit the RPV pressure increase.

The core cooling required action is dependent upon whether or not low RPV water level is reached.

A. If a low RPV water level trip is reached, the low RPV water level trip initiates the HPCI and RCIC systems to maintain water level and provide initial core cooling. Because the potential exists for continued heating and an increase suppression pool level, the reactor may require operator-initiated depressurization in accordance with the EOPs to assure continuity of long-term core cooling. The loss of RHR shutdown cooling (event 4) bounds the required action for long-term cooling.

B. If a low RPV water level trip does not occur, the event is relatively slow and is controlled by the normal operating systems. There is no unique requirement for core cooling.

If the reactor is vented (operating state B), or as a result of operation of the SRVs (operating state D), a primary containment high radiation trip that initiates closure of the primary containment isolation valves (PCIVs) may occur.

As a result of the postulated fission product release to the environment, a high radiation condition may be experienced in the air inlet to the MCR. If this condition exists, a high radiation signal from the MCR air intake radiation monitors initiates the filtration and pressurization mode of the MCR environmental control (MCREC) system.

RPV isolation and secondary containment are not required for event mitigation.

15C.4.2.2 Loss of Coolant Accident (LOCA) (Event 32)

The event description and the safety analysis for the LOCA are provided in subsection 15.3.3 and sections 6.2 and 6.3. The event evaluation is documented in figure 15C-30.

The LOCA is the postulated loss of coolant from pipe breaks in the RCPB up to and including a double-ended rupture of the

largest pipe in the reactor coolant system (RCS). This leads to the requirement to evaluate the entire break spectrum and a number of possible single failures.

The response to a LOCA can be separated into the blowdown and core cooling phases.

A. During the blowdown phase, a net loss of coolant inventory and RPV water level occurs.

B. In the core cooling phase, the ECCS is functioning, and the heat transfer to the coolant limits the cladding temperature rise. The relative duration of each phase is dependent upon break size, location, and available ECCS components.

The LOCA is frequently separated into three break size ranges:

1. Small - The HPCI system provides sufficient inventory to prevent the core from becoming uncovered. If the HPCI system is not available, the ADS depressurizes the RPV to enable operation of the low pressure ECCS (CS and the LPCI mode of RHR).

2. Intermediate - The HPCI system performs a dual function by providing makeup water as well as supplementing the break in depressurizing the RPV. In this range, the combination of the HPCI system and break flow is sufficient to depressurize the RPV to allow the combination of the CS system and the LPCI mode of RHR to perform the core cooling function. If the HPCI system is not available, the ADS provides the RPV depressurization function.

3. Large - For large breaks, the RPV is depressurized through the break, and the CS system and the LPCI mode of RHR perform the core cooling function.

The complete, very rapid, circumferential failure of a reactor recirculation pipe represents the most severe challenge to the ECCS performance limits. However, the entire spectrum of break sizes and break locations, and single failures is considered in the LOCA analysis. The following breaks are included in the postulated break size and locations:

- Small, intermediate, and large liquid breaks.
- Small and large steam line breaks inside containment.
- Breaks in ECCS discharge lines inside containment.

- Breaks in feedwater lines inside containment.

The event is required to be evaluated assuming that offsite power is available and is not available. The most limiting analysis results are obtained for the assumption that offsite power is not available; however, the required actions may be different from the case where offsite power is available.

The LOCA is postulated to only occur in operating states C and D, with RPV pressure greater than the shutdown cooling pressure permissive (figure 15-30). For pressures less than the shutdown pressure permissive, the piping in the RCPB in not pressurized to a significant fraction of the piping system design pressure, and the probability of a pipe break is acceptably low.

In operating state D, a scram is initiated on either drywell high pressure or low RPV water level.

For small breaks, RPV pressure increases and the high pressure setpoint to open the SRVs may be reached because of the pressure increase resulting from closure of the isolation valves. The SRVs self actuate to limit the RPV pressure increase. If the high pressure setpoint is not reached, the break is of sufficient size for removing decay heat to limit the pressure increase.

The system requirements for core cooling are dependent upon break size. ECCS operation is required to provide the core cooling function. In some cases, the normal operating systems can supplement the ECCS if they are available. Because the plant has turbine-driven feedwater pumps, the feedwater system is not available for large breaks. Depending upon the analysis assumptions, it may be available for small and intermediate breaks.

A. For large breaks, the RPV depressurizes as a result of the break, and the CS system and the LPCI mode of the RHR system are initiated on either drywell high pressure or low RPV water level. Flow to the RPV begins once the RPV pressure permissive is satisfied, which allows the injection valve to open.

B. For intermediate breaks, there are two paths, depending upon the availability of the HPCI system. If the HPCI system is available, the HPCI system is initiated on either drywell high pressure or low RPV water level. For this break size range, the HPCI system is capable of acting as a depressurizer to enable the CS and the LPCI mode of RHR to perform effectively. The CS system and the LPCI mode of RHR are initiated on either drywell high pressure or low RPV water level, and the injection valves open on low RPV pressure. If the HPCI

system is assumed to fail, the RPV is depressurized through actuation of ADS, which is initiated by a low RPV water level and drywell high pressure signal after a time delay and with confirmation of a low RPV water level condition and the availability of a low pressure ECCS pump (ECCS pump discharge pressure permissive). If the feedwater system is available, the system requirements are essentially the same as for a small break with feedwater available.

C. For small breaks, the core cooling sequence is dependent upon the availability of the feedwater system.

1. If feedwater is available, a low RPV water level condition may not be reached and feedwater is used to provide core cooling consistent with the requirements of the EOPs, which are entered based upon a drywell high pressure condition. As a result of the steam and water transferred to the suppression pool through either the break or operation of the SRVs, suppression pool temperature and level may increase and reach either the heat capacity temperature limit (which is based upon suppression pool temperature and RPV pressure) or the SRV tailpipe limit (which is based upon suppression pool level and RPV pressure), and manually initiated depressurization of the RPV is required. Manual initiation of the ADS can depressurize the RPV. Based upon the increase in suppression pool level the operator trips the feedwater system. Following the trip of the feedwater pumps, a low RPV water level trip will initiate the CS system and the LPCI mode of the RHR system, once the RPV pressure permissive is satisfied, to restore and maintain water level.

2. If the feedwater system is not available, the core cooling sequence is dependent upon the availability of the HPCI system. If the HPCI system is available, it is initiated on either drywell high pressure or low RPV water level. For this break size range, the HPCI system is capable of maintaining RPV water level and performing the core cooling function. If the HPCI system is not available, the CS system and the LPCI mode of RHR are initiated on either drywell high pressure or low RPV water level, and the injection valves are opened when low RPV pressure is reached. To enable the low pressure systems to perform their function, ADS actuation depressurizes the RPV.

The ADS is initiated by a low RPV water level and a drywell high pressure signal after a time delay, with confirmation of a low RPV water level condition and the availability of a low pressure ECCS pump (ECCS pump discharge pressure permissive).

The primary containment is required to mitigate the consequences of the LOCA. To achieve containment isolation for the LOCA, both the PCIVs and the reactor isolation valves must be closed. A trip on drywell high pressure or low RPV water level initiates PCIV closure. Depending upon break size, operating mode, and system performance, a low RPV water level trip, a low MSL pressure trip in the RUN mode, or a low condenser vacuum trip initiates MSIV closure and other isolation valve closure. To limit the suppression pool temperature increase as the result of a LOCA, the suppression pool cooling mode of the RHR system may be required. As a result of the energy transferred to the suppression pool resulting from the loss of coolant, the EOP entry condition on suppression pool temperature is reached. Due to the continuing mass and energy transfer to the suppression pool, a suppression pool high temperature condition is reached, requiring the operator to initiate the suppression pool cooling mode of the RHR system. If a high differential pressure occurs between the suppression chamber and the drywell, the vacuum breaker system self actuates.

The secondary containment is required to mitigate the consequences of the LOCA. A trip on either drywell high pressure or low RPV water level initiates closure of the isolation dampers in the secondary containment. The same signals initiate the standby gas treatment system (SGTS) to filter and maintain a negative pressure within the secondary containment.

As a result of the postulated fission product release, a high radiation condition in the air inlet to the MCR room can be experienced. If this condition exists, a high radiation signal from the MCR air intake radiation monitors initiates the filtration and pressurization mode of the MCREC system. RPV isolation occurs as part of the containment isolation process.

15C.4.2.3 Main Steam Line Break Accident (MSLBA) (Event 33)

The event description and the safety analysis for the MSLBA are provided in subsection 15.3.4. The event evaluation is documented in figure 15C-31.

The spectrum of postulated breaks in an NSSS pipe outside primary containment that result in the direct discharge of reactor

coolant to the environment until the break is isolated is evaluated. The complete severance of an MSL leads to the most severe challenge to the event acceptance limits associated with the release of radioactive material to the environment. For this reason, the complete severance of the MSL, with the MSL flow restrictors limiting flow, is a DBA that bounds the consequences of the spectrum of pipe breaks outside primary containment.

The event is generally evaluated assuming offsite power is not available, however, the availability of offsite power can lead to different system requirements. For most considerations, the maximum power conditions lead to the most conservative results; however, low power and high flow conditions may be more limiting when considering the potential differential pressure loads on the reactor internals and reactor fuel.

Because an MSLBA is only postulated to occur when the reactor is significantly pressurized, it can only occur in operating states C and D, with the reactor pressurized to a significant fraction of the piping system design pressure (figure 15-31).

Figure 15-31 documents the event paths associated with the complete severance of the MSL, with the MSL flow restrictors limiting flow, the DBA. In addition, the other major pipe breaks outside primary containment, RCIC, HPCI, RWC and RHR shutdown cooling, that result in a direct release to the environment, are considered. In particular, the mechanism by which the pipe break is isolated varies depending upon the break size and location.

In operating state D, and depending upon the initial operating parameters, break size and location, and availability of offsite power and other normal operating systems, a scram can be initiated by:

- Low RPV water level.
- MSIV position switches following initiation of MSIV closure.
- TSV position switches if a turbine trip occurs.
- TCV fast closure if a generator load rejection occurs.

If an automatic scram does not occur, the break size is very small, and operator action in accordance with the EOPs can control the event. The EOP entry conditions used to initiate operator action are maximum normal:

- Area radiation level.
- Area temperature.

- Area differential temperature.
- Area water level.

Based upon the EOPs and the maximum safe values for these parameters, the operator may be required to manually initiate a scram.

The pipe break is isolated by various mechanisms, depending upon break size and location.

A. For large breaks, low RPV water level, high system flow, high area temperature, high differential temperature, or low RPV pressure in the RUN mode initiates closure of the isolation valves as required.

B. For small breaks, the RPV isolation setpoints may not be reached, because the rate of inventory loss is too slow to ensure the automatic RPV isolation. Furthermore, the feedwater system, if available, has sufficient capacity to prevent low RPV water level isolation. If RPV isolation does not automatically occur, action is taken to isolate the broken line by closing the appropriate isolation valves in accordance with the EOPs. The EOP entry conditions used to initiate operator action are maximum normal:

   - Area radiation level.
   - Area temperature.
   - Area differential temperature.
   - Area water level.

   Based upon the EOPs and the maximum normal values for these parameters, the operator manually closes the appropriate isolation valves.

The high pressure setpoint to open the SRVs may be reached because of the pressure increase.

A. If the high pressure setpoint is not reached, the pressure regulation and turbine bypass systems control RPV pressure.

B. The SRVs self actuate to limit the RPV pressure increase resulting from the MSIV closure.

The required action for core cooling is dependent upon the availability of the feedwater system.

A. If the feedwater system is available, a low RPV water level condition may not be reached, and feedwater is used to provide core cooling consistent with the EOP requirements. If the main condenser is not available; e.g., as the result of postulated failures, suppression pool temperature may increase as the result of steam transferred to the pool through the SRVs until the EOP entry condition on suppression pool temperature is reached. If the SRVs are not cycling, planned operation continues with feedwater maintaining RPV water level. If an SRV is cycling, a suppression pool high temperature condition is reached, requiring the operator to initiate the RHR system in the suppression pool cooling mode to remove decay heat. Depending upon the effectiveness of the RHR system and the continued operation of the feedwater system, either the suppression pool temperature may reach the heat capacity temperature limit (which is based upon suppression pool temperature and RPV pressure) or the suppression pool level may reach the SRV tailpipe limit (which is based upon RPV pressure and suppression pool level), and manually initiated depressurization of the RPV is required. Manual initiation of the ADS depressurizes the RPV. For this path, the continuing operation of the feedwater system may result in a high water level condition in the suppression pool that requires the operator to trip the feedwater system. Following the trip of the feedwater system, a low RPV water level trip will initiate either the CS system or the LPCI mode of the RHR system to restore and maintain water level.

B. If the feedwater system is not available, a low RPV water level condition is reached. The required action depends upon the availability of the HPCI system. It should be noted that the HPCI system may be lost as a result of the event (a break in the HPCI system).

1. If available, the HPCI system is initiated on low RPV water level. As a result of either continued HPCI operation or the cycling of an SRV, a high suppression pool temperature condition is reached requiring the operator to initiate the RHR system in the suppression pool cooling mode. Depending upon the effectiveness of the RHR system, either the suppression pool temperature may reach the heat capacity temperature limit (which is based upon suppression pool temperature and RPV pressure) or the suppression pool level may reach the SRV tailpipe limit(which is based upon suppression pool level and RPV pressure), and

suppression pool level and RPV pressure), and manually initiated depressurization of the RPV is required. Manual initiation of the ADS can depressurize the RPV. Following depressurization and satisfying the RPV pressure permissive, a low RPV water level trip initiates the CS system and the LPCI mode of the RHR system to restore and maintain water level.

2. If the HPCI system is not available, the CS system and the LPCI mode of RHR are initiated on low RPV water level. Flow into the RPV to restore and maintain water level begins once the RPV pressure permissive is satisfied. To enable the low pressure systems to perform their function, ADS actuation depressurizes the RPV. A low RPV water level trip, which bypasses the drywell high pressure initiation requirement after a time delay, initiates the ADS and after another time delay and with confirmation of a low RPV water level condition and the availability of a low pressure ECCS pump (ECCS pump discharge pressure permissive). As a result of the transfer of energy to the suppression pool resulting from operation of the SRVs and depressurization, an EOP entry condition on suppression pool temperature is reached. Based upon the suppression pool temperature indication, the operator manually initiates the suppression pool cooling mode of RHR to limit the suppression pool temperature rise.

As a result of the postulated fission product release, a high radiation condition in the air inlet to the MCR may be experienced. If this condition exists, a high radiation signal from the MCR air intake radiation monitors initiates filtration and pressurization mode of the MCREC system.

The primary containment and the secondary containment are not required for event mitigation.

15C.4.2.4 Fuel-Handling Accident (Event 34)

The event description and the safety analysis for the fuel-handling accident are provided in subsection 15.3.5. The event evaluation is documented in figure 15C-32.

The dropping of a fuel assembly can cause fuel rod failures in both the dropped assembly and any assemblies that are impacted. The fission products released from the fuel and directly escaping

from the water surface enter the secondary containment atmosphere.

Because a fuel-handling accident can potentially occur any time when fuel assemblies are being manipulated either over the core (operating state A only) or in the spent fuel pool, this accident is considered in all operating states (figure 15-32).

No unique required actions relative to reactor shutdown, pressure relief, core cooling, and RPV isolation are required. A scram is not required because a fuel assembly dropped onto the core can only occur with all the control rods inserted, and the reactor continues in planned operation if the fuel assembly drop occurs in the spent fuel storage pool. The normal operating systems are not challenged and are assumed to remain operable throughout the event; therefore, feedwater control, recirculation flow control, pressure regulation, and turbine bypass or shutdown cooling accomplish the pressure relief and core cooling functions. RPV isolation is not required for event mitigation.

As a result of the postulated fission product release, a high radiation trip in the building exhaust radiation monitors is predicted. The high radiation trip initiates closure of the building isolation dampers to isolate the secondary containment and initiate the SGTS. The SGTS filters and exhausts the secondary containment atmosphere to maintain a negative pressure within the secondary containment.

If a high radiation condition in the air inlet to the MCR occurs as a result of the postulated fission product release, a high radiation signal from the MCR air intake radiation monitors initiates the filtration and pressurization mode of the MCREC system.

The primary containment is not required for event mitigation.

15C.4.2.5 Fuel Assembly Loading Error (Event 35)

The event description and the safety analysis for the fuel assembly loading error are provided in subsection 15.3.6. The event evaluation is documented in figure 15C-33.

The fuel assembly loading error accident is the postulated loading of one fuel assembly either in an improper location (mislocated) or in an improper orientation (rotated). Furthermore, it is assumed the improper loading of a fuel assembly is not discovered and corrected as a result of the core verification program, and the plant is operated throughout the operating cycle. An improper fuel insertion discovered and

corrected as part of the core verification program is discussed in paragraph 15C.4.1.6.3.

A. Mislocated Fuel Assembly - Fuel Assembly Loading Error

The mislocated fuel assembly - fuel assembly loading error causes a discrepancy between the design core configuration and the actual core configuration. The consequences of the mislocated fuel assembly are dependent upon the exposure, enrichment, and burnable poison differences between the fuel assembly that was incorrectly loaded and the fuel assembly that was designed to be in that location. Because of the low probability of this event, it is considered an accident. No other event or equipment failure is assumed to occur while the plant is operating with a mislocated fuel assembly loading error.

B. Rotated Fuel Assembly - Fuel Assembly Loading Error.

The rotated fuel assembly - fuel assembly loading error causes a discrepancy between the design core configuration and the actual core configuration. The consequences of the rotated fuel assembly fuel assembly loading error are dependent upon the lattice design. In D-lattice plants, the water gaps between fuel assemblies are not uniform. In addition, the design of the spacer buttons at the top of the channel causes a rotated fuel assembly to be slightly tilted, causing axial variation of the water gap thickness outside the channel, and therefore, the local power distribution within the fuel assembly. The consequences of a rotated fuel assembly as a function of exposure throughout the operating cycle are considered. Because of the low probability of this event, it is also considered an accident.

Because the fuel assembly loading error is applicable to all modes of planned operation, it is considered in all operating states (figure 15-33).

No unique required actions are necessary for this event, because no protective system intervention is required for event mitigation. As a result, reactor shutdown, RPV isolation, primary containment, secondary containment, and MCR habitability systems are not required. The normal operating systems, including feedwater control, recirculation flow control, pressure regulation, and turbine bypass or shutdown cooling, accomplish the core cooling and pressure relief functions.

15C.4.2.6 Recirculation Pump Seizure (Event 36)

The event description and the safety analysis for the recirculation pump seizure are provided in subsection 15.3.7. The event evaluation is documented in figure 15C-34.

The instantaneous stoppage of the recirculation pump produces a very rapid decrease in core flow. The reduction in core flow causes a rapid decrease in power level because of the increase in core voids. RPV water level swells as the result of generation of additional voids and may reach the RPV high water level trip. If the RPV high water level trip occurs, it initiates a turbine trip (TSV closure) and a trip of the feedwater system. TSV closure initiates a scram and an EOC-RPT. The turbine trip initiates a turbine bypass valve opening signal. Following the turbine trip, the increase in core voids resulting from the lower core flow, Doppler feedback, and scram limits the NMS neutron flux increase. RPV pressure is limited by the SRVs and controlled by the turbine bypass system. Operation of either the HPCI or the RCIC system maintains RPV water level. If a high level trip does not occur, the plant will stabilize into a new steady-state operating condition at a lower power level. The normal operating systems control the plant.

The recirculation pump seizure is considered in operating states C and D (figure 15-34), but is significant only in operating state D, with the reactor critical and operating at a significant power level.

Depending upon the magnitude of the level swell, a high RPV water level trip can occur. The required actions are dependent upon whether or not a high RPV water level trip occurs.

A. If a high RPV water level trip does not occur, the reactor will stabilize in a new steady-state operating condition (single-loop operation). The feedwater control, pressure regulation, and turbine bypass systems remain in operation throughout the event, and no unique requirement for pressure relief or core cooling arises. The normal operating systems fulfill these required actions. Reactor shutdown and RPV isolation are not required.

B. If a high RPV water level trip occurs, a turbine trip and a feedwater system trip occur. The required actions are dependent upon the conditions associated with these trips.

   If a high water level trip occurs in operating state D, the shutdown required action is dependent upon the initial power level.

1. If the initial power level is greater than the turbine first-stage pressure permissive, the TSV position switches initiate a scram and an EOC-RPT (trip of the operating recirculation pump).

2. If power level is less than the turbine first-stage pressure permissive, the TSV position switch scram and EOC-RPT are bypassed.

3. For the initial power levels less than the pressure permissive, the required action is dependent upon the transient signature.

   a. If the NMS high neutron flux setpoint is reached, the RPS initiates a scram on NMS high APRM neutron flux signal.

   b. If the NMS high neutron flux setpoint is not reached, but the high RPV pressure scram setpoint is reached, a scram on high RPV pressure is initiated.

   c. If the high pressure scram setpoint is not reached, a scram is not required, and the reactor will stabilize in a new steady-state operating condition until action is taken to restore the reactor to a planned operating condition.

The setpoint to open the SRVs may be reached because of the pressure increase resulting from TSV closure.

A. If the SRV high pressure setpoint is not reached, the pressure regulation and turbine bypass systems control RPV pressure.

B. If the SRV high pressure setpoint is reached, the SRVs self actuate to limit the RPV pressure increase.

As a result of the continuing water boiloff following these trips, a low RPV water level trip setpoint for the initiation of the RCIC and HPCI systems is reached. The RCIC and HPCI systems are automatically initiated to restore and maintain water level, satisfying initial core cooling requirements. The loss of RHR shutdown cooling (event 4) bounds the required actions for long-term core cooling.

RPV isolation is not required for event mitigation.

15C.4.2.7 Feedwater Line Break Accident (Event 37)

The event description and the safety analysis for the feedwater break accident are provided in subsection 15.3.8. The event evaluation is documented in figure 15C-35.

A postulated break in a feedwater system pipe outside the primary containment results in the direct discharge of feedwater and its entrained radioactivity to the environment. This event, depending upon the location of the pipe break, can result in a significant change in the operating environment for equipment and instrumentation external to the primary containment relied upon in the development of the event diagrams.
The feedwater line break accident is considered in operating states C and D (figure 15-35).

In operating state D and depending upon the initial operating parameters and break size and location, a trip on low RPV water level can initiate a scram. If an automatic scram does not occur, the break size is very small, and the event can be controlled by operator action in accordance with the EOPs. The EOP entry conditions used to initiate operator action are maximum normal:

- Radiation level.
- Area temperature.
- Area water level.

Based upon the EOPs and the maximum safe values for these parameters, the operator may be required to manually initiate a scram.

The self actuation feature of the feedwater check valves isolates the pipe break. Depending upon the break location, the MSIVs can be closed on a low RPV water level, high temperature, or high differential temperature. For some break sizes, an automatic MSIV isolation may not occur. If MSIV closure does not automatically occur, action is taken to close the valves in accordance with the EOPs. The EOP entry conditions used to initiate operator action are:

- Area radiation level.
- Area temperature.
- Area water level.

Based upon the EOPs and the values for these parameters, the operator manually closes the appropriate isolation valves.

The setpoint to open the SRVs may be reached because of the pressure increase resulting from MSIV closure.

A. If the SRV high pressure setpoint is not reached, the pressure regulation and turbine bypass systems control RPV pressure.

B. If the SRV high pressure setpoint is reached, the SRVs self actuate to limit the RPV pressure increase.

Feedwater is assumed to be lost as a result of the postulated break. A low RPV water level condition is reached and the core cooling required action depends upon the availability of the HPCI system.

A. If the HPCI system is available, it is initiated on a low RPV water level. The HPCI system restores and maintains level. As a result of continued operation of the HPCI system or cycling of an SRV, a high suppression pool temperature condition is reached requiring the operator to initiate the RHR system in the suppression pool cooling mode. Depending upon the effectiveness of the RHR system, the suppression pool temperature may reach the heat capacity temperature limit (which is based upon suppression pool temperature and RPV pressure) or the suppression pool level may reach the SRV tailpipe limit (which is based upon RPV pressure and suppression pool level), and manually initiated depressurization of the RPV is required. Manual initiation of the ADS depressurizes the RPV. Following depressurization and satisfying the RPV pressure permissive, a low RPV water level trip initiates the CS system and the LPCI mode of the RHR system to restore and maintain water level.

B. If the HPCI system is not available, the CS system and the LPCI mode of RHR are initiated on low RPV water level, and flow into the RPV begins once the RPV pressure permissive is satisfied to open the injection valves. To enable the low pressure systems to perform their function, ADS actuation depressurizes the RPV. A low RPV water level trip, which bypasses the drywell high pressure initiation requirement after a time delay initiates the ADS and after another time delay and with confirmation of a low RPV water level condition and the availability of a low pressure ECCS pump (ECCS pump discharge pressure permissive). As a result of the transfer of energy to the suppression pool resulting from SRV operation and depressurization, an EOP entry condition on suppression pool temperature is reached. Based upon the suppression pool temperature indication,

the operator manually initiates the RHR system in the suppression pool cooling mode to limit the suppression pool temperature rise.

As a result of the postulated fission product release, a high radiation condition in the air inlet to the MCR may occur. If this condition exists, a high radiation signal from the MCR air intake radiation monitors initiates the filtration and pressurization mode of the MCREC system.

The primary and secondary containments are not required for event mitigation.

15C.4.3 SPECIAL EVENTS

15C.4.3.1 Stability (Event 41)

The event description and the safety analysis for stability are provided in subsection 15.4.1. The event evaluation is documented in figure 15C-36.

Significant power or flow oscillations can only occur when the reactor is in power operation. Therefore, this event is considered only in operating state D (figure 15-36).

Depending upon core and fuel design, and the operating region entered on the power-to-flow map, reactor power and flow oscillations can occur. The required actions are dependent upon whether or not a scram is required.

A. If a scram is required, a trip of the NMS due to high oscillation power range monitor (OPRM) growth rate, amplitude, or period algorithm initiates a scram.

B. If a scram is not required, planned operation continues with the feedwater control, recirculation flow control, and pressure regulation systems available.

15C.4.3.2 Overpressure Protection (Event 42)

The event description and the safety analysis for overpressure protection are provided in subsections 15.4.2 and 5.2.2. The event evaluation is documented in figure 15C-37.

This event can only occur when the reactor is in power operation in operating state D (figure 15-37).

The most severe pressurization event is the closure of all MSIVs at their fastest design closure time.

Based upon the event definition, an NMS high neutron flux scram is assumed in the analysis. The direct scram initiated by the MSIV position switches is conservatively ignored. Based upon this assumption, an APRM NMS high neutron flux trip initiates a scram.

Based upon the event definition, the event results in a significant pressurization, and the SRVs are actuated to limit the pressure increase.

15C.4.3.3 Shutdown Without Control Rod Insertion (SLCS Capability)(Event 43)

The event description and the safety analysis for shutdown without control rod insertion (SLCS capability) are provided in subsection 15.4.3. The event evaluation is documented in figure 15C-38.

This event can only occur when the reactor is not shutdown. Therefore, this event is considered only in operating states B and D (figure 15-38).

For the shutdown without control rod insertion (SLCS capability) event, it is assumed the operator initiates the SLCS to inject sufficient sodium pentaborate into the reactor to enable a cold shutdown condition to be attained. To ensure the effectiveness of the SLCS, initiation of the SLCS generates a trip, closing the reactor water cleanup (RWC) system isolation valves, thereby completing the shutdown without control rod insertion.

15C.4.3.4 MCR Uninhabitability (Event 44)

The event description and the safety analysis for MCR uninhabitability are provided in subsection 15.4.4. The event evaluation is documented in figure 15C-39.

The MCR is designed to be continuously occupied at all times. The MCR uninhabitability (shutdown from outside the MCR) event is evaluated to demonstrate compliance with GDC 19, which requires that equipment at appropriate locations outside the MCR be provided with the following capabilities:

- A design capability for prompt hot shutdown of the reactor, including necessary instrumentation and controls to maintain the unit in a safe condition during hot shutdown.

- A potential capability for subsequent cold shutdown of the reactor through the use of suitable procedures.

A shutdown outside the MCR can be postulated to occur under any operating condition. As a result, the event is considered in all operating states (figure 15-39).

All actions are based upon plant procedures developed assuming the MCR becomes uninhabitable. All operator actions occur external to the MCR. No other failures are assumed to occur.

In operating state B or D, the operator can initiate a scram by opening the power supply breakers to the RPS. The remainder of the actions are dependent upon the initial operating state and whether or not a reactor isolation occurs following a shutdown.

A. If the reactor is initially operating in the shutdown cooling mode of RHR, planned operation in the shutdown cooling mode is continued.

B. If the reactor is not initially operating the shutdown cooling mode of RHR and the reactor does not isolate following a shutdown, planned operation continues with the feedwater, pressure regulation, and turbine bypass systems available.

C. If the reactor is not initially operating the shutdown cooling mode of RHR and the reactor is isolated following a shutdown, the SRVs self actuate to limit the RPV pressure increase resulting from the isolation.

   As a result of the isolation, the steam supply to the turbine-driven feedwater pumps and the main condenser (heat sink) is lost. Following isolation, the continuing water boiloff resulting from RPV decay heat results in a low RPV water level trip that initiates the RCIC. Consistent with plant procedures, the operator takes the following actions:

   - Confirms RCIC system initiation and controls the RCIC system to maintain water level.
   - Initiates the suppression pool cooling mode of RHR to limit the temperature rise in the suppression pool.
   - Opens the SRVs from the remote shutdown panel to depressurize the RPV until the shutdown cooling pressure permissive is reached.

- Following depressurization, initiates planned operation of the RHR system in the shutdown cooling mode.

15C.4.3.5 Anticipated Transient Without Scram (ATWS) (Event 45)

The event description and the safety analysis for ATWS are provided in subsection 15.4.5. The event evaluation is documented in figure 15C-40.

Any AOO that has a high frequency of occurrence and is terminated by an automatic or manually initiated scram can be postulated as an initiating event for ATWS. Because a failure to scram requires multiple failures, no specific causes are identified. However, postulated potential sources of failure include:

- Failure of the protective instrumentation to generate a scram signal when RPS setpoints are exceeded.
- Multiple failures in electrical components within the RPS.
- Failure of the CRD hydraulic (CRDH) system.
- Failure within individual control rods.

Plant design is such that, for AOOs requiring an automatic scram, a minimum of two, and in some cases three or four, diverse and redundant RPS instrument setpoints are predicted to be exceeded during a significant ATWS event.

This event can only occur when the reactor is in operating state D (figure 15-40). The event consequences are significant only when the plant is in power operation at a significant power level.

In all ATWS cases considered, shutdown is required. For ATWS events, shutdown is considered in two phases:

A. Initial Negative Reactivity Insertion

Tripping the recirculation pumps through the ATWS-RPT circuitry accomplishes initial negative reactivity insertion. Automatic tripping of the ATWS-RPT occurs on either high RPV pressure or low RPV water level. For cases in which a shutdown is required but does not automatically occur, an EOP entry condition on scram required and power level > 5% is reached. The EOPs require that a manual scram be initiated before the suppression pool temperature limit is reached. This

scram is assumed to fail. Furthermore, on scram required and power level > 5%, the EOPs require manual initiation of ATWS-RPT if all control rods are not fully inserted.

B. Capability to Reach Cold Shutdown Condition

To reach a cold shutdown condition, operator action is necessary to ensure sufficient negative reactivity insertion is accomplished so that a cold subcritical condition can be attained. The ARI system is also assumed to fail to insert the control rods. Therefore, it is not included in the required action for this event. This leads to a requirement that operator action be taken to initiate SLCS operation. If an automatic RPT occurs, the EOP entry condition on scram required and power level > 5% can result. At this point, the same system conditions exist, regardless of the path. Manual SLCS initiation is required if the suppression pool temperature is predicted to reach the SLCS initiation limit prior to shutdown. The SLCS injects sufficient sodium pentaborate into the reactor to enable a cold shutdown condition to be attained. These actions complete the shutdown path.

The setpoint to open the SRVs may be reached if the event results in a significant pressurization.

A. If the SRV high pressure setpoint is not reached, the pressure regulation and turbine bypass systems control RPV pressure.

B. If the SRV high pressure setpoint is reached, the SRVs self actuate to limit the RPV pressure increase.

The required action for core cooling is dependent upon the availability of the feedwater system. If feedwater is not available, a low RPV water level trip initiates the HPCI and RCIC systems to maintain water level. Due to the continuing SRV operation, suppression pool temperature can increase until the EOP entry condition on suppression pool temperature is reached. For most ATWS scenarios, a suppression pool high temperature condition is reached, requiring the operator to initiate the RHR system in the suppression pool cooling mode to remove heat and, following shutdown, limit the pool temperature increase. Depending upon the effectiveness of suppression pool cooling, either the suppression pool temperature can reach the heat capacity temperature limit (which is based upon suppression pool temperature and RPV pressure) or the suppression pool level may reach the SRV tailpipe limit (which is based upon suppression pool level and RPV pressure), and manually initiated

depressurization of the RPV is required in accordance with the EOPs. Manual initiation of the ADS depressurizes the RPV. Following the depressurization of the system and in accordance with the EOPs, the RHR system can be manually initiated in the shutdown cooling mode to remove decay heat.

For some initiating events considered, the low RPV water level trip initiates MSIV other reactor isolation valve closure. If the low RPV water level setpoints are not reached, RPV isolation is not required.

As a result of the postulated ATWS events, a low RPV water level trip initiating PCIV closure is expected to be reached. If the low RPV water level trip setpoints are not reached, containment isolation is not required.

15C.4.3.6 Generator Load Rejection With Flux Scram and No Bypass or RPT (Event 46)

The event description and the safety analysis for generator load rejection with flux scram and no bypass or RPT are provided in subsection 15.4.6. The event evaluation is documented in figure 15C-41.

A generator load rejection with flux scram and no bypass or RPT can only occur in operating state D (figure 15-41), with the main turbine operating.

NMS high neutron flux inputs into the RPS initiate a scram.

The SRVs self actuate to limit the RPV pressure increase resulting from TCV closure, assuming the unavailability of the turbine bypass valves.

The normally operating feedwater system provides initial core cooling. However, the continuing operation of the SRVs may result in an increase in suppression pool temperature such that an EOP entry condition is reached. The loss of RHR shutdown cooling (event 4) bounds the required actions for long-term cooling.

RPV isolation is not required for event mitigation.

15C.4.3.7 Turbine Trip With Flux Scram and No Bypass or RPT (Event 47)

The event description and the safety analysis for turbine trip with flux scram and no bypass or RPT are provided in

subsection 15.4.7. The event evaluation is documented in figure 15C-42.

A turbine trip with flux scram and no bypass or RPT can only occur in operating state D (figure 15-42), with the main turbine operating.

NMS high neutron flux inputs into the RPS initiate a scram. The SRVs self actuate to limit the pressure increase resulting from TCV fast closure and the assumed unavailability of the turbine bypass valves.

The normally operating feedwater system provides initial core cooling. However, the continuing SRV operation can result in an increase in suppression pool temperature such that an EOP entry condition is reached. The loss of RHR shutdown cooling (event 4) bounds the required actions for long-term core cooling.

RPV isolation is not required for event mitigation.

15C.4.3.8 Loss of One dc System (Event 48)

The event description and the safety analysis for the loss of one dc system are provided in subsection 15.4.8. The event evaluation is documented in figure 15C-43.

Because the loss of one dc system is applicable to all modes of planned operation, it is considered in all operating states (figure 15-43). The loss of one dc system can initiate a turbine trip. For these cases, the evaluation of the TTBP event (paragraph 15C.4.1.3.5) is applicable. The required actions for this event are dependent upon whether or not a turbine trip occurs.

A. If a turbine trip does not occur, the reactor continues in normal operation consistent with the Technical Specifications. The feedwater control, recirculation flow control, pressure regulation, and turbine bypass systems remain in operation throughout the event, and no unique requirement for either pressure relief or core cooling arises. The normal operating systems fulfill these required actions. Reactor shutdown and RPV isolation are not required.

B. If a turbine trip occurs, the shutdown required action is dependent upon the initial power level.

   1. If the initial power level is greater than the turbine first-stage pressure permissive, the TSV position switches initiate a scram and an EOC-RPT.

2. If the initial power level is less than the turbine first-stage pressure permissive, the TSV position switch scram and EOC-RPT are bypassed, and the required action is dependent upon the transient signature.

   a. If the NMS high neutron flux setpoint is reached, the RPS initiates a scram on an NMS high APRM neutron flux signal.

   b. If the NMS high neutron flux setpoint is not reached, but the high RPV pressure scram setpoint is reached, the RPS initiates a scram on high RPV pressure.

   c. If the NMS high neutron flux and the high RPV pressure scram setpoints are not reached, the reactor will stabilize in a new steady-state operating condition until action is taken to return the reactor to a planned operating condition.

The setpoint to open the SRVs may be reached, except when the event is initiated from very low power levels.

A. If the SRV high pressure setpoint is not reached, heat losses from the system may be sufficient to limit any pressure increase.

B. If the SRV high pressure setpoint is reached, the SRVs self actuate to limit the pressure increase.

Because the feedwater control, recirculation flow control, pressure regulation, and turbine bypass systems remain in operation throughout the event, no unique requirement for core cooling arises. The normal operating systems fulfill this required action.

RPV isolation is not required for event mitigation.

It should be noted that the single-failure requirements identified on the event diagrams for the other events considered in the NSOA cover the loss of one dc system relative to the specific event.

15C.4.3.9 Loss of Instrument Air (Event 49)

The event description and the safety analysis for the loss of instrument air are provided in subsection 15.4.9. The event evaluation is documented in figure 15C-44.

Because the loss of the instrument air system is applicable to all modes of planned operation, it is considered in all operating states (figure 15-44).

The required actions are dependent upon whether or not a loss of condenser vacuum occurs. The loss of condenser vacuum sequentially trips the TSVs closed, which in turn opens the turbine bypass valves, initiates MSIV closure, and closes the turbine bypass valves (initially opened as a result of the turbine trip).

A. If a loss of condenser vacuum does not occur, the reactor continues in normal operation. The feedwater control, pressure regulation, and turbine bypass systems remain in operation throughout the event, and no unique requirement for pressure relief or core cooling arises. The normal operating systems fulfill these required actions. Shutdown is not required unless a loss of air to the backup scram valves occurs. If a loss of air to the backup scram valves occurs, the fail-safe design of the CRD system inserts the control rods.

B. If a loss of condenser vacuum trip occurs, MSIV closure isolates the RPV. The low condenser vacuum input into the PC&RPV isolation control system initiates MSIV closure. A low condenser vacuum trip can be manually bypassed if the reactor is not in the RUN mode and the TSVs are < 90% open. If a loss of condenser vacuum trip does not occur, RPV isolation is not required.

The required action for shutdown is dependent upon two factors:

- Loss of condenser vacuum that results in a turbine trip and an MSIV closure.
- Loss of the air supply to the backup scram valves.

A. If the initial power level is greater than the turbine first-stage pressure permissive, a low condenser vacuum trip sequentially trips the turbine, resulting in a TSV closure, which initiates a scram and an EOC-RPT.

B. If power level is less than the turbine first-stage pressure permissive, the TSV position switch scram and

EOC-RPT are bypassed, and the required action is dependent upon the transient signature.

1. If the NMS high neutron flux setpoint is reached, either the IRMs in the STARTUP mode, the APRMs (setdown) in the STARTUP mode, or the APRMs (in the RUN mode) initiate an NMS neutron flux trip signal to the RPS to initiate a scram.

2. If the NMS high neutron flux setpoint is not reached, but the high RPV pressure scram setpoint is reached, the RPS initiates a scram on high RPV pressure.

C. An alternate shutdown path occurs as the result of the possibility the air supply to the backup scram valves is lost because of an instrument air failure. As described above, a loss of air to the backup scram valves inserts the control rods.

D. If either a scram setpoint is not reached or the air supply to the backup scram valves is not lost, shutdown is not required.

E. Another alternate shutdown path can occur if a low condenser vacuum trip initiates MSIV closure. In operating state D, MSIV closure in the RUN mode initiates a scram.

The setpoint to open the SRVs may be reached because of the pressure increase resulting from either MSIV closure or a turbine trip.

A. If the SRV high pressure setpoint is not reached, the normal operating systems controls RPV pressure.

B. If the SRV high pressure setpoint is reached, the SRVs self actuate to limit the RPV pressure increase.

If the MSIVs are closed as a result of the loss of condenser vacuum, the steam supply to the turbine-driven feedwater pumps is lost. The continuing water boiloff attributable to RPV decay heat results in a low RPV water level trip setpoint for the initiation of the RCIC and HPCI systems being reached. The RCIC and HPCI systems are automatically initiated to restore and maintain water level, satisfying initial core cooling requirements. The loss of RHR shutdown cooling (event 4) bounds the required action for long-term core cooling.

15C.4.3.10 Loss of Service Water System (Event 50)

The event description and the safety analysis for the loss of service water system are provided in subsection 15.4.10. The event evaluation is documented in figure 15C-45.

One division of RHRSW and PSW is arbitrarily assumed to fail. Based upon this evaluation, it is concluded that, considering all AOOs and accidents that require the service water system as an auxiliary support system, a single failure does not result in unacceptable consequences. The single-failure requirements identified on the event diagrams for the other events considered in the NSOA cover the loss of a service water system relative to the specific event.

Considering a failure of the RHRSW and PSW systems, the plant will continue in planned operation, consistent with plant procedures and the Technical Specifications. Because the loss of one division of the service water system is applicable to all modes of planned operation, it is considered in all operating states. No unique required actions are necessary, because no protective system intervention is required.

15C.4.3.11 Fire (Event 51)

The event description and the safety analysis for fire are provided in subsection 15.4.11. The event evaluation is documented in figure 15C-46.

For postulated fire events, it is necessary to demonstrate that fire protection features are capable of limiting fire damage so that:

A. One train of systems necessary to achieve and maintain hot shutdown conditions from either the MCR or emergency control station(s) is free of fire damage.

B. Systems necessary to achieve and maintain cold shutdown from either the MCR or the emergency control station(s) can be repaired within 72 hours.

Because fire can be postulated to occur under any operating condition, it is considered in all operating states (figure 15-46). All actions are based upon plant procedures developed for safe shutdown for postulated fire locations.

In operating state B or D, the required actions are dependent upon whether or not an automatic scram occurs.

A. Depending upon the failures or equipment actuations that occur as a result of the fire, a scram can occur as a result of low RPV water level, MSIV position switches following initiation of MSIV closure, TSV position switches following a turbine trip, or on a TCV fast closure following a load rejection.

B. If an automatic scram does not occur, the operator can initiate a scram.

RPV isolation can occur on low RPV water level, low MSL pressure in the RUN mode, loss of ac power to the RPS power supply, or other fire-induced trips associated with the PC&RPV isolation control system. Any automatic trip that occurs initiates closure of the MSIVs. If an automatic RPV isolation does not occur, it is not required.

The setpoint to open the SRVs may be reached because of the pressure increase associated with the postulated fire-induced failures or isolation of the RPV.

A. If the SRV high pressure setpoint is not reached, the pressure regulation, turbine bypass, and shutdown cooling systems control RPV pressure.

B. If the SRV high pressure setpoint is reached, the SRVs self actuate to limit the RPV pressure increase.

The required action for core cooling is dependent upon the operability of the normal operating systems or the various standby systems.

A. If the normal operating systems are available, the initially operating feedwater control system or shutdown cooling system continues in planned operation and performs the core cooling requirements.

B. If the normal operating systems are not available, at least one of three acceptable pathways is available.

1. Pathway 1

Pathway 1 uses primarily Division 1 equipment. The core cooling path depends upon whether or not spurious operation of the ADS occurs as a result of the fire.

For the most likely case, spurious operation of the ADS is not expected. For this case, a low RPV water level trip setpoint for the initiation of the RCIC system is reached. The RCIC system is

automatically initiated to restore and maintain water level. As a result of continued operation of the RCIC system, the suppression pool temperature may reach the EOP entry condition. Either the suppression pool temperature may reach the heat capacity temperature limit (which is based upon suppression pool temperature or RPV pressure) or the suppression pool level may reach the SRV tailpipe limit (which is based upon the suppression pool level and RPV pressure) and manual initiation of RPV depressurization is then required. Once the reactor is depressurized to below the RPV pressure permissive, the operator initiates RHR alternate shutdown cooling to restore inventory and remove decay heat (paragraph 15C.4.1.2.1).

If spurious operation of the ADS occurs, a low RPV water level trip for the initiation of the CS system is reached. The CS system is automatically initiated to restore and maintain water level. Following the initial refill of the core, the operator initiates RHR alternate shutdown cooling to maintain inventory and remove decay heat.

2. Pathway 2

Pathway 2 is the same as Pathway 1 except that it uses primarily Division 2 equipment. In Pathway 2, the HPCI system replaces the function of the RCIC system. All other functions remain the same.

3. Pathway 3

Pathway 3 utilizes the RCIC system, SRVs, and shutdown cooling mode of RHR. For Pathway 3, a low RPV water level trip setpoint for the RCIC system initiation is reached. The RCIC system is automatically initiated to restore and maintain water level. Continued RCIC system operation can result in the suppression pool temperature reaching the EOP entry condition. Either the suppression pool temperature may reach the heat capacity temperature limit (which is based upon suppression pool temperature and RPV pressure) or suppression pool level may reach the SRV tailpipe limit (which is based upon suppression pool level and RPV pressure), and manual initiation of RPV depressurization is then required. Once the reactor is depressurized to below the RHR shutdown

cooling permissive, the operator resumes planned operation by initiating the shutdown cooling mode of RHR to remove decay heat.

15C.4.3.12 Miscellaneous Small Releases Outside Containment (Event 52)

The event description and the safety analysis for miscellaneous small releases outside of containment are provided in subsection 15.4.12. The event evaluation is documented in figure 15C-47.

Since the miscellaneous small releases outside containment event is applicable to all modes of planned operation, it is considered in all operating states (figure 15-47).

No unique required actions are necessary for this event, because no protective system intervention is required. Therefore, for miscellaneous small releases outside containment during normal plant operation, the plant continues in planned operation.

15C.4.3.13 Instrument Line Break (Event 53)

The event description and the safety analysis for an instrument line break are provided in subsection 15.4.13. The event evaluation is documented in figure 15C-48.

An instrument line break results in a release of reactor coolant to the reactor building until the reactor is depressurized. Because an instrument line break is only postulated to occur when the reactor is significantly pressurized, it can only occur in operating states C and D (figure 15-48), with the reactor pressurized to a significant fraction of the piping system design pressure.

Only the secondary containment is required. As a result of the postulated radioactivity release from the postulated break, a high radiation trip of the reactor building ventilation exhaust radiation monitors is predicted. The high radiation trip initiates closure of the building isolation dampers to isolate the secondary containment and initiate the SGTS, which filters and exhausts the secondary containment atmosphere to maintain a negative pressure within the secondary containment. These actions are necessary to establish and maintain the secondary containment.

Automatic shutdown and RPV isolation are not required for event mitigation. If required, operator action can accomplish these functions. The normal operating systems, including feedwater

control, pressure regulation, and turbine bypass, accomplish core the cooling and pressure relief functions. The MCR habitability systems are not required.

15C.4.3.14 Liquid Radwaste Tank Failure (Event 54)

The event description and the safety analysis for liquid radwaste tank failure are provided in subsection 15.4.14. The event evaluation is documented in figure 15C-49.

Because the liquid radwaste tank failure event is applicable to all modes of planned operation, it is considered in all operating states (figure 15-49).

No unique required actions are necessary for this event, because no protective system intervention is required. As a result, reactor shutdown, RPV isolation, primary containment, secondary containment, and MCR habitability systems are not required. The normal operating systems, including feedwater control, recirculation flow control, pressure regulation, and turbine bypass or shutdown cooling, accomplish the core cooling and pressure relief functions.

15C.4.3.15 Gaseous Radwaste Tank Failure (Event 55)

The event description and the safety analysis for gaseous radwaste tank failure are provided in subsection 15.4.15. The event evaluation is documented in figure 15C-50.

The limiting failure of components in the offgas system, SJAEs, and turbine gland-sealing system bound the consequences of the various types of gaseous radwaste system failures.

The gaseous radwaste system is only operable in operating state D (figure 15-50). The required actions are dependent upon whether or not a loss of condenser vacuum occurs as a result of the event.

A. If a loss of condenser vacuum does not occur, the reactor continues in planned operation.

B. If a low condenser vacuum trip occurs, the required action for shutdown is dependent upon the initial power level.

In operating state D, the shutdown required action is dependent upon the initial power level.

A. If the initial power level is greater than the turbine first-stage pressure permissive, a low condenser vacuum trip sequentially trips the turbine, resulting in a TSV closure, which initiates a scram and an EOC-RPT.

B. If the initial power level is less than the turbine first-stage pressure permissive, the TSV position switch scram and EOC-RPT are bypassed, and the required action is dependent upon the transient signature.

1. If the NMS high neutron flux setpoint is reached, the high APRM neutron flux initiates an NMS neutron flux trip signal to the RPS to initiate a scram.

2. If the NMS high neutron flux setpoint is not reached, but the high RPV pressure scram setpoint is reached, the RPS initiates a scram on high RPV pressure.

3. If the NMS high neutron flux and the RPV high pressure scram setpoints are not reached, the reactor will stabilize in a new steady-state operating condition until action is taken to return the reactor to a planned operating condition.

An alternate shutdown path can occur if a low condenser vacuum trip initiates MSIV closure. The low condenser vacuum input into the PC&RPV isolation control system initiates MSIV closure. A low condenser vacuum trip can be manually bypassed if the reactor is not in the RUN mode and the TSVs are < 90% open. In operating state D, MSIV closure in the RUN mode initiates a scram.

The setpoint to open the SRVs may be reached, except when the event is initiated from very low power levels.

A. If the SRV high pressure setpoint is not reached, heat losses from the system may be sufficient to limit any pressure increase.

B. If the SRV high pressure setpoint is reached, the SRVs self actuate to limit the pressure increase.

If the MSIVs are closed as a result of the loss of condenser vacuum, the steam supply to the turbine-driven feedwater pumps is lost. The continuing water boiloff due to RPV decay heat results in a low RPV water level trip setpoint for the initiation of the RCIC and HPCI systems being reached. The HPCI and RCIC systems are automatically initiated to restore and maintain water level, satisfying initial core cooling requirements. The loss of RHR

shutdown cooling (event 4) bounds the required action for long-term core cooling.

If the MSIVs are not closed, the normal operating systems provide core cooling.

Primary containment, secondary containment and MCR habitability systems are not required.

15C.4.3.16 Station Blackout (SBO) (Event 56)

The event description and the safety analysis for SBO are provided in subsection 15.4.16. The event evaluation is documented in figure 15C-51.

SBO demonstrates compliance with the SBO coping capability requirements of 10 CFR 50.63. For postulated SBO events, it is necessary to demonstrate the plant is capable of coping with SBO having a duration of 4 h. In the coping capability evaluation, an alternate ac power source (standby onsite power supply) is assumed to be available within 1 h to the blacked-out unit. After the 4-h coping period, it is assumed station operators either restore offsite power or start an additional emergency diesel generator to bring the plant to a cold shutdown condition.

Because SBO can be postulated to occur under any operating condition, it is considered in all operating states (figure 15-51). All actions are based upon plant procedures developed for SBO.

In operating state D, the required action for shutdown is highly dependent upon the event signature.

A. If a generator load rejection occurs and the initial power level is greater than the turbine first-stage pressure permissive, the TCV fast closure initiates a scram and an EOC-RPT.

B. If a generator load rejection does not occur or the initial power level is less than the turbine first-stage pressure permissive, the required action is dependent upon whether or not a turbine trip occurs.

C. If a turbine trip occurs and initial power level is greater than the turbine first-stage pressure permissive, TSV position switches and EOC-RPT initiate a reactor scram.

D. If a turbine trip occurs and initial power level is less than the turbine first-stage pressure permissive,

the TSV position switches scram are bypassed, and the required action is dependent upon the transient signature.

1. If the NMS high neutron flux setpoint is reached, the RPS initiates a scram on an NMS high APRM neutron flux signal.

2. If the NMS high neutron flux is not reached, the RPS initiates a scram on high RPV pressure if the high RPV pressure scram setpoint is reached.

3. If the NMS high neutron flux and the RPV high pressure scram setpoints are not reached, the RPS initiates a scram on low RPV water level if the RPV low water level scram setpoint is reached.

E. A scram (fail-safe design) is initiated following loss of the RPS power supply (coastdown of the RPS M-G set).

RPV isolation occurs either on loss of condenser vacuum or loss of power (RPS power supply). The low condenser vacuum input into the PC&RPV isolation control system initiates MSIV closure. A low condenser vacuum trip can be manually bypassed if the reactor is not in the RUN mode and the TSVs are < 90% open. If a low condenser vacuum trip does not occur, the loss of the RPS power supply results in the fail-safe closure of the MSIVs. In operating state D, an alternate shutdown path is established by closing the MSIVs in the RUN mode to initiate a scram.

The setpoint to open the SRVs may be reached because of the pressure increase resulting from closure of the TCVs, TSVs, or MSIVs.

A. If the SRV high pressure setpoint is not reached, the pressure regulation and turbine bypass systems control RPV pressure.

B. If the SRV high pressure setpoint is reached, the SRVs self actuate to limit the RPV pressure increase.

As a result of the LOFW, the low RPV water level trip setpoint for the initiation of the RCIC system is reached. The RCIC system is automatically initiated to restore and maintain water level, satisfying initial core cooling requirements. The loss of RHR shutdown cooling (event 4) bounds the required action for long-term core cooling following the 4-h coping period.

DOCUMENTS INCORPORATED BY REFERENCE INTO THE FSAR

"GESTAR II - General Electric Standard Application for Reactor Fuel," NEDE-24011-P-A.

Unit 1 and Unit 2 Core Operating Limits Reports (located in each unit's Technical Requirements Manual, Appendix A).

TABLE 15C-1

OPERATIONAL CRITERIA

	Applicability	Criteria
1.	Planned operation	The plant shall be operated observing operating state monitoring requirements identified to preserve safety analysis assumptions and establish initial conditions for event analyses. Normal plant operating procedures are followed as applicable.
2.	AOOs, accidents, and special events	All required actions shall be satisfied to assure conformance to applicable event acceptance limits.
3.	AOOs, accidents, and special events	EOPs and AOPs are followed when applicable.
4.	AOOs	The plant shall be designed and operated such that no single failure in mitigation systems can prevent required actions from being satisfied.[a]
5.	Accidents	The plant shall be designed and operated to satisfy required actions, considering limiting single failure as defined by applicable regulatory requirements and licensing commitments.[a]
6.	AOOs and accidents	Single-failure criterion is not applicable during periods of system or component testing required by Technical Specifications (TS) or when operating under limiting conditions for operation required by Technical Specifications.[a]
7.	Special events	The plant shall be designed and operated consistent with applicable regulatory requirements and licensing commitments.

a. Single-failure is described more completely in subsection 15.1.6.

TABLE 15C-2 (SHEET 1 OF 2)

BWR OPERATING STATES/OPERATING MODES

STATE A - RPV VENTED and REACTOR SHUTDOWN[a]

Allowable Mode Switch Positions:
SHUTDOWN
REFUEL

Pressure Considerations:
Atmospheric Pressure

Power Considerations:
Decay Heat Only

STATE B - RPV VENTED and REACTOR NOT SHUTDOWN[a][b]

Allowable Mode Switch Positions:
SHUTDOWN
REFUEL
STARTUP

Pressure Considerations:
Atmospheric Pressure

Power Considerations:
Decay Heat Only

STATE C - REACTOR HEAD ON (RPV NOT VENTED) and REACTOR SHUTDOWN[a]

Allowable Mode Switch Positions:
SHUTDOWN
REFUEL
STARTUP

Pressure Considerations:
Hot Shutdown ≥ Reactor Pressure ≥ Shutdown Cooling Permissive
Shutdown Cooling Permissive ≥ Reactor Pressure ≥ Atmospheric

Power Considerations:
Decay Heat Only

TABLE 15C-2 (SHEET 2 OF 2)

STATE D - REACTOR HEAD ON (RPV NOT VENTED)
and
REACTOR NOT SHUTDOWN[a]

Allowable Mode Switch Positions:
- STARTUP
- RUN

Pressure Considerations:
- Normal Operation ≥ Reactor Pressure ≥ Shutdown Cooling Permissive
- Shutdown Cooling Permissive ≥ Reactor Pressure ≥ Atmospheric

Power Considerations:
- Licensed Power Level ≥ Reactor Power ≥ Scram Bypass on Turbine First-Stage Pressure
- Scram Bypass on Turbine First-Stage Pressure ≥ Reactor Power ≥ Recirculation Flow Runback
- Recirculation Flow Runback ≥ Reactor Power ≥ RWM Bypass
- RWM Bypass ≥ Reactor Power ≥ APRM Setdown
- APRM Setdown ≥ Reactor Power ≥ Subcritical

a. Reactor shutdown is defined as subcritical by more than the worth of the highest-worth rod.
b. Plant procedures only allow operation in operating state B for a short period of time to achieve criticality and begin heatup following an outage. Per plant procedures, operating state B can only occur with the primary containment intact (i.e., RPV vented to the primary containment).

TABLE 15C-3 (SHEET 1 OF 2)

EVENTS ASSOCIATED WITH OPERATING STATES

Event Title	Operating State A	B	C	D
AOOs				
• LFWH				x
• Inadvertent start of the HPCI pump			x	x
• Shutdown cooling (RHR) malfunction - decreasing temperature	x	x	x	
• Loss of RHR shutdown cooling	x	x	x	x
• LRNBP				x
• LRBP				x
• TTNBP				x
• Loss of condenser vacuum			x	x
• TTBP				x
• Closure of all MSIVs			x	x
• Closure of one MSIV			x	x
• Pressure regulator failure - closed				x
• Trip of one recirculation pump			x	x
• Trip of two recirculation pumps			x	x
• Recirculation flow controller failure - decreasing flow				x
• Recirculation flow controller failure - increasing flow				x
• Startup of idle recirculation pump			x	x
• RWE	x	x	x	x
• Control rod removal error during refueling	x			
• Fuel assembly insertion error during refueling	x			
• FWCF				x
• Inadvertent opening of an SRV			x	x
• Pressure regulator failure - open			x	x
• Loss of auxiliary power	x	x	x	x
• LOFW				x
ACCIDENTS				
• CRDA	x	x	x	x
• LOCA			x	x
• MSLBA			x	x
• Fuel-handling accident	x	x	x	x
• Fuel assembly loading error	x	x	x	x
• Recirculation pump seizure			x	x
• Feedwater line break			x	x

TABLE 15C-3 (SHEET 2 OF 2)

Event Title	Operating State A	B	C	D
SPECIAL EVENTS				
• Stability				x
• Overpressure protection				x
• Shutdown without control rod insertion (SLCS capability)		x		x
• MCR uninhabitability	x	x	x	x
• ATWS				x
• Generator load rejection with flux scram and no bypass or RPT				x
• Turbine trip with flux scram and no bypass or RPT				x
• Loss of one dc system	x	x	x	x
• Loss of instrument air	x	x	x	x
• Loss of service water system	x	x	x	x
• Fire	x	x	x	x
• Miscellaneous small releases outside containment	x	x	x	x
• Instrument line break			x	x
• Liquid radwaste tank failure	x	x	x	x
• Gaseous radwaste tank failure				x
• SBO	x	x	x	x

TABLE 15C-4 (SHEET 1 OF 2)

KEY BOUNDING PARAMETERS FOR PLANNED OPERATION

Parameter	Implementing Document
Maximum thermal power level	Operating license
Allowable power-to-flow map	Plant procedures
Minimum water level	Plant procedures/Technical Specifications
Maximum reactor steam dome pressure	Technical Specifications
Maximum feedwater temperature	Plant procedures/Technical Specifications
SAFDLs	***COLR***
Minimum shutdown margin	Technical Specifications
Core configuration	***GESTAR***
Allowable control rod withdrawal sequences	Technical Specifications
Water quality limits	Technical Requirements Manual
Coolant activity limits	Technical Specifications
Gaseous radwaste release limits	Offsite Dose Calculation Manual (ODCM)
Liquid radwaste release limits	ODCM
Solid radwaste release limits	ODCM/Process Control Program
RPV rate of temperature change limit	Technical Specifications
Maximum ΔT between recirculation loops limit	Technical Specifications
RPV pressure and temperature limits	Technical Specifications
RPV head boltup limits	Technical Specifications
RCS leakage limit	Technical Specifications
Shutdown cooling maximum pressure	Technical Specifications
Primary containment pressure limit	Technical Specifications
Primary containment temperature limit	Technical Specifications
Primary containment oxygen limit	Technical Specifications

TABLE 15C-4 (SHEET 2 OF 2)

Parameter	Implementing Document
Suppression pool temperature limit	Technical Specifications
Suppression pool volume limit	Technical Specifications
Spent fuel storage limits	Technical Specifications
New fuel storage limits	Technical Specifications
Fuel-handling restrictions	Technical Specifications
Control rod housing supports installed	FSAR section 4.5
Normal operating procedures followed	Plant procedures

TABLE 15C-5 (SHEET 1 OF 3)

REQUIRED ACTIONS

Event Category	Required Actions	Relationship to Event Acceptance Limits[a]
AOOs	Reactor shutdown (scram)	Satisfy TS limits for release of radioactive effluents, SAFDLs, and RPV safety limit.
	Pressure relief	Satisfy RPV safety limit.
	Core cooling	Satisfy TS limits for release of radioactive effluents, SAFDLs, and primary containment design limits.
	RPV isolation	Satisfy TS limits for release of radioactive effluents and SAFDLs.
	Rod movement block	Satisfy TS limits for release of radioactive effluents and SAFDLs.
ACCIDENTS	Reactor shutdown (scram)	Satisfy fuel and nuclear system design limits applicable to accidents.
	Pressure relief	Satisfy nuclear system design limits applicable to accidents.
	Core cooling	Satisfy fuel limits, including ECCS limits, applicable to accidents.
	RPV isolation	Satisfy guideline dose values for accidents and radiation exposure limits for plant personnel.
	Establish and maintain primary containment	Satisfy guideline dose values for accidents and radiation exposure limits for plant personnel.
	Establish and maintain secondary containment	Satisfy guideline dose values for accidents and radiation exposure limits for plant personnel.
	MCR habitability	Satisfy radiation exposure limits for plant personnel.

TABLE 15C-5 (SHEET 2 OF 3)

Event Category	Required Actions	Relationship to Event Acceptance Limits[a]
SPECIAL EVENTS		
• Stability	Reactor shutdown	Demonstrate conformance to SAFDLs.
• Overpressure protection	Reactor shutdown; pressure relief	Demonstrate conformance to ASME Code limits.
• Shutdown without control rod insertion (SLCS capability)	Reactor shutdown; RPV isolation	Demonstrate ability to reach shutdown independent of control rods.
• MCR uninhabitability	Reactor shutdown; pressure relief; core cooling	Demonstrate ability to reach cold shutdown condition.
• ATWS	Reactor shutdown; pressure relief; core cooling; RPV isolation	Demonstrate conformance to limits associated with requirements of 10 CFR 50.62.
	Establish and maintain primary containment	
• Generator load rejection with flux scram and no bypass or RPT	Reactor shutdown; pressure relief; core cooling	Demonstrate acceptable radiological consequences.
• Turbine trip with flux scram and no bypass or RPT	Reactor shutdown; pressure relief; core cooling	Demonstrate acceptable radiological consequences
• Loss of one dc system	Reactor shutdown; pressure relief	Demonstrate acceptable radiological consequences.

TABLE 15C-5 (SHEET 3 OF 3)

Event Category	Required Actions	Relationship to Event Acceptance Limits[a]
• Loss of instrument air	Reactor shutdown; pressure relief; core cooling; RPV isolation	Demonstrate acceptable radiological consequences.
• Loss of service water system	NA	Demonstrate acceptable radiological consequences.
• Fire	Reactor shutdown; pressure relief; core cooling; RPV isolation	Demonstrate conformance to limits associated with requirements of 10 CFR 50.48.
• Miscellaneous small releases outside containment	NA	Demonstrate acceptable radiological consequences.
• Instrument line break	Establish and maintain secondary containment	Demonstrate acceptable radiological consequences.
• Liquid radwaste tank failure	NA	Demonstrate acceptable radiological consequences.
• Gaseous radwaste tank failure	Reactor shutdown; pressure relief; core cooling; RPV isolation	Demonstrate acceptable radiological consequences.
• SBO	Reactor shutdown; pressure relief; core cooling; RPV isolation	Demonstrate conformance to limits associated with requirements of 10 CFR 50.63.

a. A complete description of safety analysis event acceptance limits is provided in subsection 15.1.5.

TABLE 15C-6 (SHEET 1 OF 4)

EVENT ANALYSIS RULES

A. General Rules		Explanation
A.1	Include all events that are part of the plant safety analysis.	All events considered in the plant safety analysis are included in the NSOA, consistent with NSOA goals and objectives.
A.2	Identify on event diagrams all required systems, automatic trips, and operator actions necessary to either satisfy operational criteria or perform required actions.	Systems, automatic trips, and operator actions are identified only if they are uniquely necessary to either accomplish required actions or satisfy operational criteria.
A.3	Identify all support or auxiliary systems on auxiliary system diagrams.	Auxiliary systems are systems required to enable front-line systems (systems identified on event diagrams) or other auxiliary systems to perform their required functions.
A.4	Consider all plant systems, including passive plant features required in the mitigation of events.	The functions of passive plant features (e.g., MSL flow restrictors and CRD housing supports) used to mitigate the consequences of events are identified.
A.5	Consider hardware restrictions included in the plant design to prevent operation outside the operating envelope.	Hardware restrictions (e.g., control rod withdrawal restrictions and refueling interlocks) are included in the plant design to constrain plant operation to within the allowable operating envelope.

TABLE 15C-6 (SHEET 2 OF 4)

B.	Planned Operation Rules	Explanation
B.1	Consider only systems, limits, and restrictions necessary to attain planned operation and satisfy operational criteria (as opposed to AOOs, accidents, and special events that are followed through to completion).	Consideration of planned operation is limited and not followed through to completion, because planned operation is constrained by normal plant operating procedures. During planned operation, the plant is operated within the allowable operating envelope for the specific operating mode.
B.2	Limit initial conditions for AOOs, accidents, and special events to operating modes and envelopes allowed during planned operation in the applicable operating state.	All events in the safety analysis are initiated from an operating mode within the allowable operating envelope.
B.3	Consider the full range of initial conditions for each event analyzed.	This rule assures all event paths are identified. Different initial conditions can lead to different paths that may establish unique system requirements.
B.4	Apply hardware restrictions only to planned operation.	Restrictions are hardware-implemented constraints on normal plant operation to limit the consequences of postulated events.
B.5	Identify normal operating systems considered for a planned operation function during an event as "Planned Operation - Specific System Available."	Normal operating systems are considered if the system is employed in the same manner during the event as it was prior to the event or if continued operation can significantly change the event path.

TABLE 15C-6 (SHEET 3 OF 4)

C.	Event Diagram Rules	Explanation
C.1	Consider the entire duration of the event from the spectrum of possible initial conditions and aftermath until either some mode of planned operation is resumed or the plant is in a safe, stable condition with continuity of core cooling.	Planned operation is considered "resumed" when normal operating procedures are being followed and plant operation is identical to that used in any operating state consistent with allowable operating modes and envelopes. A stable operating condition is defined as the completion of all required actions and the stabilization of plant parameters.
C.2	Identify systems, automatic trips, and operator actions if there is a unique requirement as a result of the event. If a normal operating system that was operating prior to the event will be employed in the same manner during the event and if the event did not affect system operation, the system does not appear as a unique requirement on the event diagram.	Systems, limits, and operator actions are identified as "required" only if a unique requirement to satisfy either required actions or operational criteria is established. When normal operating systems are considered, specific systems assumed to be available are identified.
C.3	Credit operator action only if the operator can reasonably be expected to accomplish the required action under existing conditions and has availability of necessary information to implement required plant procedures.	Operator action may be necessary to either attain planned operation or a stable condition.

TABLE 15C-6 (SHEET 4 OF 4)

C. Event Diagram Rules	Explanation
C.4 Identify two types of parameters: • Parameters that initiate an automatic trip or system actuation. • Monitored parameters (available to the operator) that require action.	Parameter are instrument setpoints at which either an automatic trip or system initiation or operator action is assumed to occur. Where either an automatic action or operator action accomplishes the same function, the automatic action is identified.
C.5 Consider a system that plays a unique role in response to an AOO, accident, or special event "required" unless system effects are not included in the event analysis.	Systems that have a unique role in an event are considered "required" unless the safety analysis for the event provides a basis that operation of the system is not required.
C.6 Identify operating states in which the event is applicable.	Because of plant operational considerations and the definition of operating states, not all events can occur in all operating states.
C.7 Identify the essential paths that include: • Required actions. • Front-line systems. • Automatic trips. • Monitored parameters. • Normal operating systems evaluated in analysis.	Event diagrams are the primary source of documentation of NSOA results. Notes identify required actions that are not applicable and required actions satisfied by the normal operating systems.
C.8 Identify passive plant features necessary at the system level.	Passive plant features are associated with system level requirements but are not included on the event diagrams, because they add unnecessary complexity.

HNP-2-FSAR-15C

TABLE 15C-7

NSOA SYSTEM/EVENT MATRIX

	ANTICIPATED OPERATIONAL OCCURRENCES	Loss of Feedwater Heating	Inadvertent Start of HPCI Pump	Shutdown Cooling (RHR) Malfunction Decreasing Temperature	Loss of RHR Shutdown Cooling	Generator Load Rejection with No Bypass (LRNBP)	Generator Load Rejection with Bypass (LRBP)	Turbine Trip with No Bypass (TTNBP)	Loss of Condenser Vacuum	Turbine Trip with Bypass (TTBP)	Closure of All MSIVs (MSIVD)	Closure of One MSIV	Pressure Regulator Failure - Closed	Trip of One Recirculation Pump	Trip of Two Recirculation Pumps	Recirculation Flow Controller Failure - Decreasing Flow	Recirculation Flow Controller Failure - Increasing Flow	Startup of Idle Recirculation Pump	RWE During Power Operation	Control Rod Removal Error During Refueling	Fuel Assembly Insertion Error During Refueling	Feedwater Controller Failure - Maximum Demand (FWCF)	Inadvertent Opening of an SRV	Pressure Regulator Failure - Open	Loss of Auxiliary Power	Loss of Feedwater Flow (LOFW)	ACCIDENTS	Control Rod Drop Accident (CRDA)	Loss of Coolant Accident (LOCA)	Main Steam Line Break Accident (MSLBA)	Fuel-Handling Accident	Fuel Assembly Loading Error	Recirculation Pump Seizure	Feedwater Line Break	SPECIAL EVENTS	Stability	Overpressure Protection	Shutdown without Control Rod Insertion (SLCS Capability)	MCR Uninhabitability	Anticipated Transients without Scram (ATWS)	Generator Load Rejection with Flux Scram and No Bypass or RPT	Turbine Trip with Flux Scram and No Bypass or RPT	Loss of One dc System	Loss of Instrument Air	Loss of Service Water System	Fire	Miscellaneous Small Releases Outside Containment	Instrument Line Break	Liquid Radwaste Tank Failure	Gaseous Radwaste Tank Failure	Station Blackout (SBO) (including coping period)
System		1	2	3	4	5	6	7	8	9	10	11	12	13	14	15	16	17	18	19	20	21	22	23	24	25		31	32	33	34	35	36	37		41	42	43	44	45	46	47	48	49	50	51	52	53	54	55	56
NMS		X	X	X	X	X	X	X	X	X	X	X			X		X	X	X			X		X	X			X					X			X	X				X	X	X	X						X	X
RPS		X	X	X	X	X	X	X	X	X	X	X			X		X	X	X			X	X	X	X	X		X	X	X			X	X		X	X		X		X	X	X	X		X				X	X
CRD System		X	X	X	X	X	X	X	X	X	X	X			X		X	X	X			X	X	X	X	X		X	X	X			X	X		X	X		X		X	X	X	X		X				X	X
SRVs			X		X	X	X	X	X	X	X				X							X		X	X			X	X	X			X	X			X		X	X	X	X	X	X		X				X	X
RCIC			X		X				X		X				X							X		X	X	X		X					X						X	X				X		X				X	X
HPCI			X		X				X		X				X							X		X	X	X		X	X	X			X	X						X				X		X				X	
ADS			X		X	X		X	X		X				X							X	X	X	X	X		X	X	X			X	X						X	X	X		X		X				X	X
Core Spray System			X		X	X		X	X		X				X							X	X	X	X	X		X	X	X			X	X							X	X		X		X				X	X
RHR-LPCI Mode																													X	X				X																	
RHR-Suppression Pool Cooling Mode			X		X	X		X	X		X				X							X	X	X	X	X		X	X	X			X	X					X	X	X	X		X						X	X
RHR-Alternate Shutdown Cooling			X		X	X		X	X		X				X							X	X	X	X	X		X					X								X	X		X		X				X	X
EOC-RPT					X	X	X	X	X	X					X							X		X	X								X										X	X						X	X
ATWS-RPT																																								X											
PC&RPV Isolation Control System					X				X															X	X			X	X	X	X			X				X		X				X		X		X		X	X
MSIVs					X				X															X	X				X	X				X						X				X		X				X	X
RPV Isolation Valves					X																								X	X								X		X											
RBM System																			X																																
Containment Isolation Valves																												X	X											X											
Vacuum Breaker System																													X																						
Reactor Building Isolation Dampers																													X		X																	X			
SGTS																													X		X																	X			
MCREC System																												X	X	X	X			X																	
SLCS																																						X		X											

X ← System Required

☐ ← System Not Required

TABLE 15C-8 (SHEET 1 OF 2)

NSOA AUTOMATIC INSTRUMENT TRIP/EVENT MATRIX

Automatic Instrument Trip	ANTICIPATED OPERATIONAL OCCURRENCES	1 Loss of Feedwater Heating	2 Inadvertent Start of HPCI Pump	3 Shutdown Cooling (RHR) Malfunction - Decreasing Temperature	4 Loss of RHR Shutdown Cooling	5 Generator Load Rejection with No Bypass (LRNBP)	6 Generator Load Rejection with Bypass (LRBP)	7 Turbine Trip with No Bypass (TTNBP)	8 Loss of Condenser Vacuum	9 Turbine Trip with Bypass (TTBP)	10 Closure of All MSIVs (MSIVD)	11 Closure of One MSIV	12 Pressure Regulator Failure - Closed	13 Trip of One Recirculation Pump	14 Trip of Two Recirculation Pumps	15 Recirculation Flow Controller Failure - Decreasing Flow	16 Recirculation Flow Controller Failure - Increasing Flow	17 Startup of Idle Recirculation Pump	18 RWE During Power Operation	19 Control Rod Removal Error During Refueling	20 Fuel Assembly Insertion Error During Refueling	21 Feedwater Controller Failure - Maximum Demand (FWCF)	22 Inadvertent Opening of an SRV	23 Pressure Regulator Failure - Open	24 Loss of Auxiliary Power	25 Loss of Feedwater Flow (LOFW)	ACCIDENTS	31 Control Rod Drop Accident (CRDA)	32 Loss of Coolant Accident (LOCA)	33 Main Steam Line Break Accident (MSLBA)	34 Fuel-Handling Accident	35 Fuel Assembly Loading Error	36 Recirculation Pump Seizure	37 Feedwater Line Break	SPECIAL EVENTS	41 Stability	42 Overpressure Protection	43 Shutdown without Control Rod Insertion (SLCS Capability)	44 MCR Uninhabitability	45 Anticipated Transients without Scram (ATWS)	46 Generator Load Rejection with Flux Scram and No Bypass or RPT	47 Turbine Trip with Flux Scram and No Bypass or RPT	48 Loss of One dc System	49 Loss of Instrument Air	50 Loss of Service Water System	51 Fire	52 Miscellaneous Small Releases Outside Containment	53 Instrument Line Break	54 Liquid Radwaste Tank Failure	55 Gaseous Radwaste Tank Failure	56 Station Blackout (SBO) (including coping period)
Trip on Low Water Level - Scram																									X	X			X	X				X																					X
Trip on Low Water Level - RCIC Initiation			X		X				X		X				X							X		X	X	X		X					X							X	X				X		X				X	X
Trip on Low Water Level - HPCI Initiation			X		X				X		X				X							X		X	X	X		X	X	X			X	X							X				X		X				X	
Trip on Low Water Level - Core Spray Initiation																													X	X				X																X				
Trip on Low Water Level - RHR-LPCI Mode Initiation																													X	X				X																				
Trip on Low Water Level - ADS Inputs																													X	X				X																				
Trip on Low Water Level - RPV Isolation																													X	X				X									X								X				
Trip on Low Water Level - Primary Containment																													X														X												
Trip on Low Water Level - Secondary Containment																													X																										
Trip on Low Water Level - ATWS-RPT																																											X												
Trip on High Drywell Pressure Scram																													X																										
Trip on High Drywell Pressure HPCI Initiation																													X																										
Trip on High Drywell Pressure Core Spray Initiation																													X																										
Trip on High Drywell Pressure RHR-LPCI Mode Initiation																													X																										
Trip on High Drywell Pressure ADS Input																													X																										
Trip on High Drywell Pressure Primary Containment																													X																										
Trip on High Drywell Pressure Secondary Containment																													X																										
Trip on High Pressure - Scram					X	X	X	X	X	X	X				X							X		X	X								X												X	X					X	X
Trip on High Pressure - ATWS-RPT																																											X												
Trip on High Pressure - Shutdown Cooling Isolation					X																																																		
High Pressure Setpoint - SRV Opening			X		X	X	X	X	X	X	X				X							X		X	X			X	X	X			X	X			X		X	X	X	X	X	X	X		X				X	X
Trip on High APRM Neutron Flux - Scram			X		X	X	X	X	X	X	X	X			X		X	X	X			X		X	X			X					X				X				X	X	X	X	X						X	X
Trip on IRM High Neutron Flux - Scram			X	X					X		X								X																										X									
Trip on High Simulated Thermal Power - Scram		X																																																				
Trip on RBM High Neutron Flux - Rod Block																			X																																			
Trip on High OPRM Gr. Rate, Amp., or Period Algo. - Scram																																					X																		

X ← System Required

☐ ← System Not Required

TABLE 15C-8 (SHEET 2 OF 2)

ANTICIPATED OPERATIONAL OCCURRENCES	Loss of Feedwater Heating	Inadvertent Start of HPCI Pump	Shutdown Cooling (RHR) Malfunction - Decreasing Temperature	Loss of RHR Shutdown Cooling	Generator Load Rejection with No Bypass (LRNBP)	Generator Load Rejection with Bypass (LRBP)	Turbine Trip with No Bypass (TTNBP)	Loss of Condenser Vacuum	Turbine Trip with Bypass (TTBP)	Closure of All MSIVs (MSIVC)	Closure of One MSIV	Pressure Regulator Failure - Closed	Trip of One Recirculation Pump	Trip of Two Recirculation Pumps	Recirculation Flow Controller Failure - Decreasing Flow	Recirculation Flow Controller Failure - Increasing Flow	Startup of Idle Recirculation Pump	RWE During Power Operation	Control Rod Removal Error During Refueling	Fuel Assembly Insertion Error During Refueling	Feedwater Controller Failure - Maximum Demand (FWCF)	Inadvertent Opening of an SRV	Pressure Regulator Failure - Open	Loss of Auxiliary Power	Loss of Feedwater Flow (LOFW)
Automatic Instrument Trip	1	2	3	4	5	6	7	8	9	10	11	12	13	14	15	16	17	18	19	20	21	22	23	24	25
Trip on TSV Position - Scram				X			X	X	X					X							X		X	X	
Trip on TSV Position - EOC-RPT				X			X	X	X					X							X		X	X	
Trip on TCV Fast Closure - Scram					X	X																		X	
Trip on TCV Fast Closure - EOC-RPT					X	X																		X	
Turbine First-Stage Pressure Permissive				X	X	X	X	X	X					X							X		X	X	
Trip on MSIV Position Switches - Scram				X				X		X													X	X	
Trip on Low Condenser Vacuum - MSIV Closure				X				X																X	
Trip on Low MSL Pressure in RUN Mode - MSIV Closure																							X		
Trip on High Area Temp - RPV Isolation																									
Trip on High Area ΔT - RPV Isolation																									
Trip on High Flow - RPV Isolation																									
Trip on SLCS Initiation - RWC Isolation																									
Trip on High Radiation - Primary Containment																									
Trip on High Radiation - Secondary Containment																									
Trip on High Radiation - MCR Environment																									
ECCS (LPCI & CS) Pump Disch Press Permissive - ADS Input																									
RPV Pressure Permissive - Core Spray		X		X	X		X	X		X				X							X	X	X	X	X
RPV Pressure Permissive - RHR LPCI Mode																									
RPV Pressure Permissive - RHR Alt Shutdown Cooling		X		X	X		X	X		X				X							X	X	X	X	X

ACCIDENTS	Control Rod Drop Accident (CRDA)	Loss of Coolant Accident (LOCA)	Main Steam Line Break Accident (MSLBA)	Fuel-Handling Accident	Fuel Assembly Loading Error	Recirculation Pump Seizure	Feedwater Line Break	SPECIAL EVENTS	Stability	Overpressure Protection	Shutdown without Control Rod Insertion (SLCS Capability)	MCR Uninhabitability	Anticipated Transients without Scram (ATWS)	Generator Load Rejection with Flux Scram and No Bypass or RPT	Turbine Trip with Flux Scram and No Bypass or RPT	Loss of One dc System	Loss of Instrument Air	Loss of Service Water System	Fire	Miscellaneous Small Releases Outside Containment	Instrument Line Break	Liquid Radwaste Tank Failure	Gaseous Radwaste Tank Failure	Station Blackout (SBO) (including coping period)
Automatic Instrument Trip	31	32	33	34	35	36	37		41	42	43	44	45	46	47	48	49	50	51	52	53	54	55	56
Trip on TSV Position - Scram			X			X										X	X		X				X	X
Trip on TSV Position - EOC-RPT						X										X	X						X	X
Trip on TCV Fast Closure - Scram			X																X					X
Trip on TCV Fast Closure - EOC-RPT																								X
Turbine First-Stage Pressure Permissive						X										X	X						X	X
Trip on MSIV Position Switches - Scram			X														X		X				X	X
Trip on Low Condenser Vacuum - MSIV Closure		X															X						X	X
Trip on Low MSL Pressure in RUN Mode - MSIV Closure		X	X																X					
Trip on High Area Temp - RPV Isolation			X				X																	
Trip on High Area ΔT - RPV Isolation			X																					
Trip on High Flow - RPV Isolation			X																					
Trip on SLCS Initiation - RWC Isolation											X		X											
Trip on High Radiation - Primary Containment	X																							
Trip on High Radiation - Secondary Containment				X																	X			
Trip on High Radiation - MCR Environment	X	X	X	X			X																	
ECCS (LPCI & CS) Pump Disch Press Permissive - ADS Input		X	X				X																	
RPV Pressure Permissive - Core Spray	X	X	X			X	X							X	X		X		X				X	X
RPV Pressure Permissive - RHR LPCI Mode		X	X				X																	
RPV Pressure Permissive - RHR Alt Shutdown Cooling	X					X								X	X		X		X				X	X

X ← System Required

□ ← System Not Required

TABLE 15C-9

NSOA MONITORED PARAMETER/EVENT MATRIX

Monitored Parameter	ANTICIPATED OPERATIONAL OCCURRENCES:	1 Loss of Feedwater Heating	2 Inadvertent Start of HPCI Pump	3 Shutdown Cooling (RHR) Malfunction - Decreasing Temperature	4 Loss of RHR Shutdown Cooling	5 Generator Load Rejection with No Bypass	6 Generator Load Rejection with Bypass (LRBP)	7 Turbine Trip with No Bypass (TTNBP)	8 Loss of Condenser Vacuum	9 Turbine Trip with Bypass (TTBP)	10 Closure of All MSIVs (MSIVC)	11 Closure of One MSIV	12 Pressure Regulator Failure - Closed	13 Trip of One Recirculation Pump	14 Trip of Two Recirculation Pumps	15 Recirculation Flow Controller Failure - Decreasing Flow	16 Recirculation Flow Controller Failure - Increasing Flow	17 Startup of Idle Recirculation Pump	18 RWE During Power Operation	19 Control Rod Removal Error During Refueling	20 Fuel Assembly Insertion Error During Refueling	21 Feedwater Controller Failure - Maximum Demand (FWCF)	22 Inadvertent Opening of an SRV	23 Pressure Regulator Failure - Open	24 Loss of Auxiliary Power	25 Loss of Feedwater Flow (LOFW)	ACCIDENTS:	31 Control Rod Drop Accident (CRDA)	32 Loss of Coolant Accident (LOCA)	33 Main Steam Line Break Accident (MSLBA)	34 Fuel-Handling Accident	35 Fuel Assembly Loading Error	36 Recirculation Pump Seizure	37 Feedwater Line Break	SPECIAL EVENTS:	41 Stability	42 Overpressure Protection	43 Shutdown without Control Rod Insertion (SLCS Capability)	44 MCR Uninhabitability	45 Anticipated Transients without Scram (ATWS)	46 Generator Load Rejection with Flux Scram and No Bypass or RPT	47 Turbine Trip with Flux Scram and No Bypass or RPT	48 Loss of One dc System	49 Loss of Instrument Air	50 Loss of Service Water System	51 Fire	52 Miscellaneous Small Releases Outside Containment	53 Instrument Line Break	54 Liquid Radwaste Tank Failure	55 Gaseous Radwaste Tank Failure	56 Station Blackout (SBO) (including coping period)
Suppression Pool Temp - EOP Entry Condition			X		X	X		X	X		X				X							X	X	X	X	X		X	X	X			X	X						X	X	X		X		X				X	X
Suppression Pool Temp - Manual Scram																							X																													
Suppression Pool Temp - Suppression Pool Cooling			X		X	X		X	X		X				X							X	X	X	X	X		X	X	X			X	X						X	X	X		X		X				X	X
Suppression Pool Temp - RHR Alternate Shutdown Cooling																																														X					
Heat Capacity Temp Limit - RPV Depressurization			X		X	X		X	X		X				X							X	X	X	X	X		X	X	X			X	X						X	X	X		X		X				X	X
SRV Tailpipe Limit - RPV Depressurization			X		X	X		X	X		X				X							X	X	X	X	X		X	X	X			X	X						X	X	X		X		X				X	X
Suppression Pool Level - Feedwater Pump Trip						X		X															X						X	X											X	X								X	X
Low RPV Water Level - Low Pressure ECCS Initiation			X		X	X		X	X		X				X							X	X	X	X	X		X					X							X	X			X		X				X	X
Drywell Pressure - EOP Entry Condition																													X																						
Maximum Normal Area Water Level - EOP Entry Condition																														X					X																
Maximum Safe Area Water Level - Manual Scram																														X					X																
Maximum Normal Area Water Level - RPV Isolation																														X					X																
Maximum Normal Radiation Level - EOP Entry Condition																														X					X																
Maximum Safe Radiation Level - Manual Scram																														X					X																
Maximum Normal Radiation Level - RPV Isolation																														X					X																
Maximum Normal Area Temp - EOP Entry Condition																														X					X																
Maximum Safe Area Temp - Manual Scram																														X					X																
Maximum Normal Area Temp - RPV Isolation																														X					X																
Maximum Normal Area ΔT - EOP Entry Condition																														X					X																
Maximum Safe Area ΔT- Manual Scram																														X					X																
Maximum Normal Area ΔT- RPV Isolation																														X					X																
Scram Required and Reactor Power > 5% - EOP Entry Condition																																									X										
Reactor Power - ATWS-RPT Initiation																																									X										
Suppression Pool Temp - SLCS Initiation																																									X										
Shutdown Cooling Pressure Permissive - Shutdown Cooling																																									X										

X ← System Required

☐ ← System Not Required

TABLE 15C-10

NSOA AUXILIARY SYSTEM/EVENT MATRIX

Auxiliary System	ANTICIPATED OPERATIONAL OCCURRENCES	1 Loss of Feedwater Heating	2 Inadvertent Start of HPCI Pump	3 Shutdown Cooling (RHR) Malfunction - Decreasing Temperature	4 Loss of RHR Shutdown Cooling	5 Generator Load Rejection with No Bypass (LRNBP)	6 Generator Load Rejection with Bypass (LRBP)	7 Turbine Trip with No Bypass (TTNBP)	8 Loss of Condenser Vacuum	9 Turbine Trip with Bypass (TTBP)	10 Closure of All MSIVs (MSIVD)	11 Closure of One MSIV	12 Pressure Regulator Failure - Closed	13 Trip of One Recirculation Pump	14 Trip of Two Recirculation Pumps	15 Recirculation Flow Controller Failure - Decreasing Flow	16 Recirculation Flow Controller Failure - Increasing Flow	17 Startup of Idle Recirculation Pump	18 RWE During Power Operation	19 Control Rod Removal Error During Refueling	20 Fuel Assembly Insertion Error During Refueling	21 Feedwater Controller Failure - Maximum Demand (FWCF)	22 Inadvertent Opening of an SRV	23 Pressure Regulator Failure - Open	24 Loss of Auxiliary Power	25 Loss of Feedwater Flow (LOFW)
dc Power System			X		X	X		X	X		X				X							X	X	X	X	X
Auxiliary ac Power			X		X	X		X	X		X				X							X	X	X	X	X
Standby ac Power					X																				X	
Offsite ac Power System			X		X	X		X	X		X				X							X	X	X	X	X
Equipment Area Cooling System			X		X	X		X	X		X				X							X	X	X	X	X
RHRSW System			X		X	X		X	X		X				X							X	X	X	X	X
PSW System			X		X	X		X	X		X				X							X	X	X	X	X
Suppression Pool Storage			X		X	X	X	X	X	X	X				X							X	X	X	X	X
Ultimate Heat Sink			X		X	X		X	X		X				X							X	X	X	X	X
Alternate ac Power																										

Auxiliary System	ACCIDENTS	31 Control Rod Drop Accident (CRDA)	32 Loss of Coolant Accident (LOCA)	33 Main Steam Line Break Accident (MSLBA)	34 Fuel-Handling Accident	35 Fuel Assembly Loading Error	36 Recirculation Pump Seizure	37 Feedwater Line Break	SPECIAL EVENTS	41 Stability	42 Overpressure Protection	43 Shutdown without Control Rod Insertion (SLCS Capability)	44 MCR Uninhabitability	45 Anticipated Transients without Scram (ATWS)	46 Generator Load Rejection with Flux Scram and No Bypass or RPT	47 Turbine Trip with Flux Scram and No Bypass or RPT	48 Loss of One dc System	49 Loss of Instrument Air	50 Loss of Service Water System	51 Fire	52 Miscellaneous Small Releases Outside Containment	53 Instrument Line Break	54 Liquid Radwaste Tank Failure	55 Gaseous Radwaste Tank Failure	56 Station Blackout (SBO)(including coping period)
dc Power System		X	X	X	X		X	X				X	X	X	X	X		X		X		X		X	X
Auxiliary ac Power		X	X	X	X		X	X				X	X	X	X	X		X		X		X		X	X
Standby ac Power			X	X				X						X						X					X
Offsite ac Power System		X	X	X	X		X	X				X	X	X	X	X		X		X		X		X	X
Equipment Area Cooling System		X	X	X			X	X					X	X	X	X		X		X				X	X
RHRSW System		X	X	X			X	X					X	X	X	X		X		X				X	X
PSW System		X	X	X			X	X					X	X	X	X		X		X				X	X
Suppression Pool Storage		X	X	X			X	X			X		X	X	X	X	X	X		X				X	X
Ultimate Heat Sink		X	X	X			X	X					X	X	X	X		X		X				X	X
Alternate ac Power																									X

☒ ← System Required   ☐ ← System Not Required

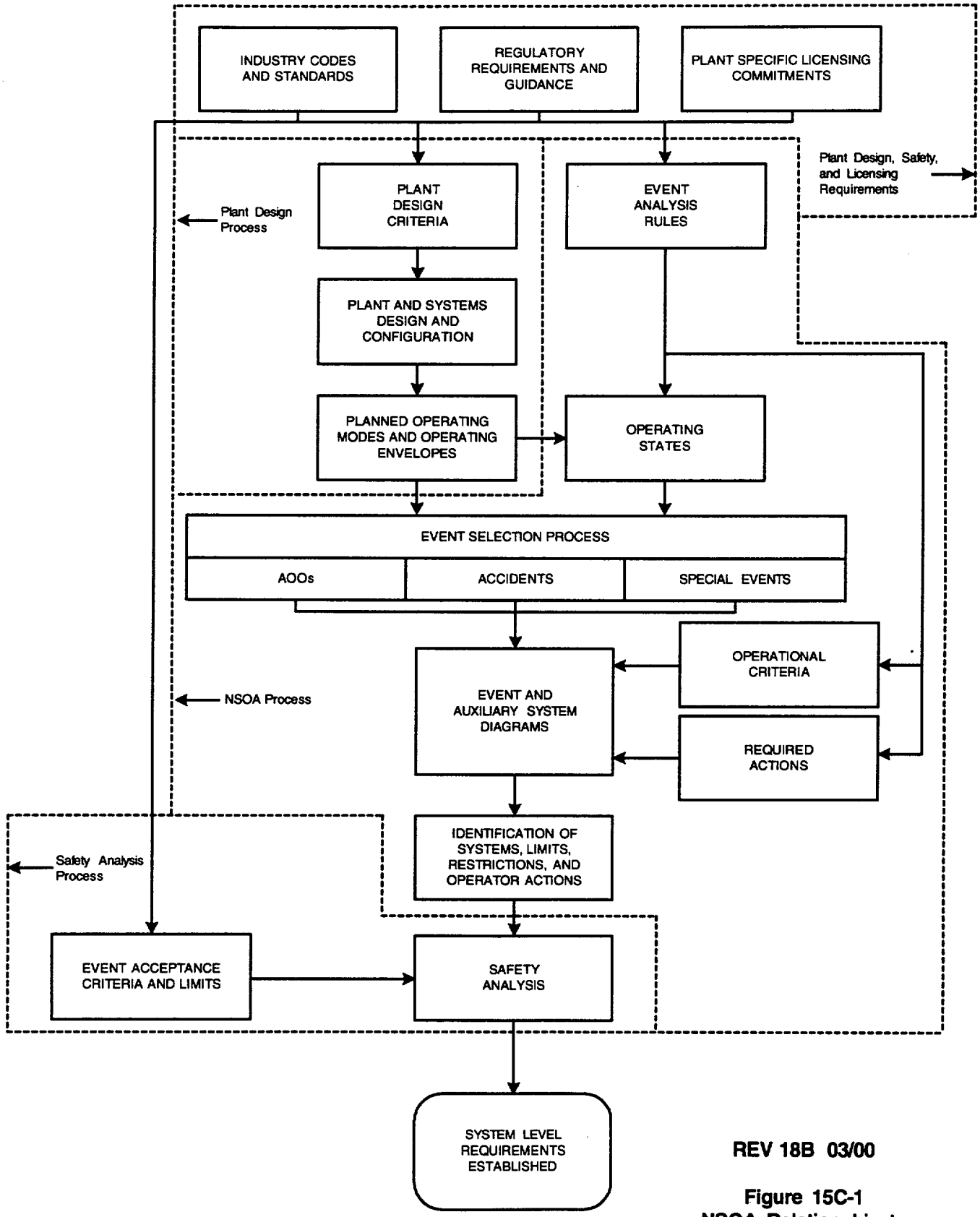

REV 18B 03/00

Figure 15C-1
NSOA Relationship to Safety Analysis and Design Process

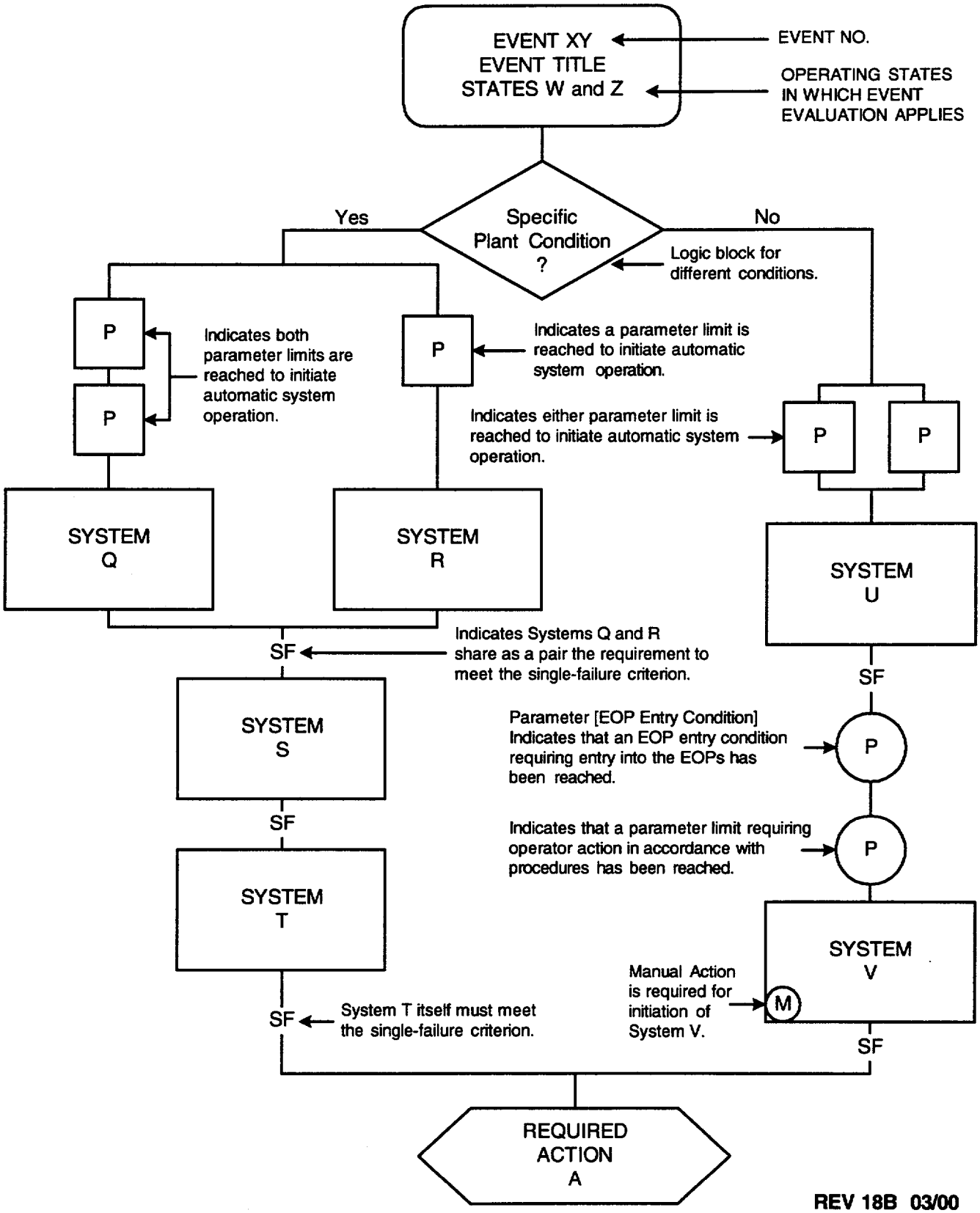

Figure 15C-2
Event Diagram Format

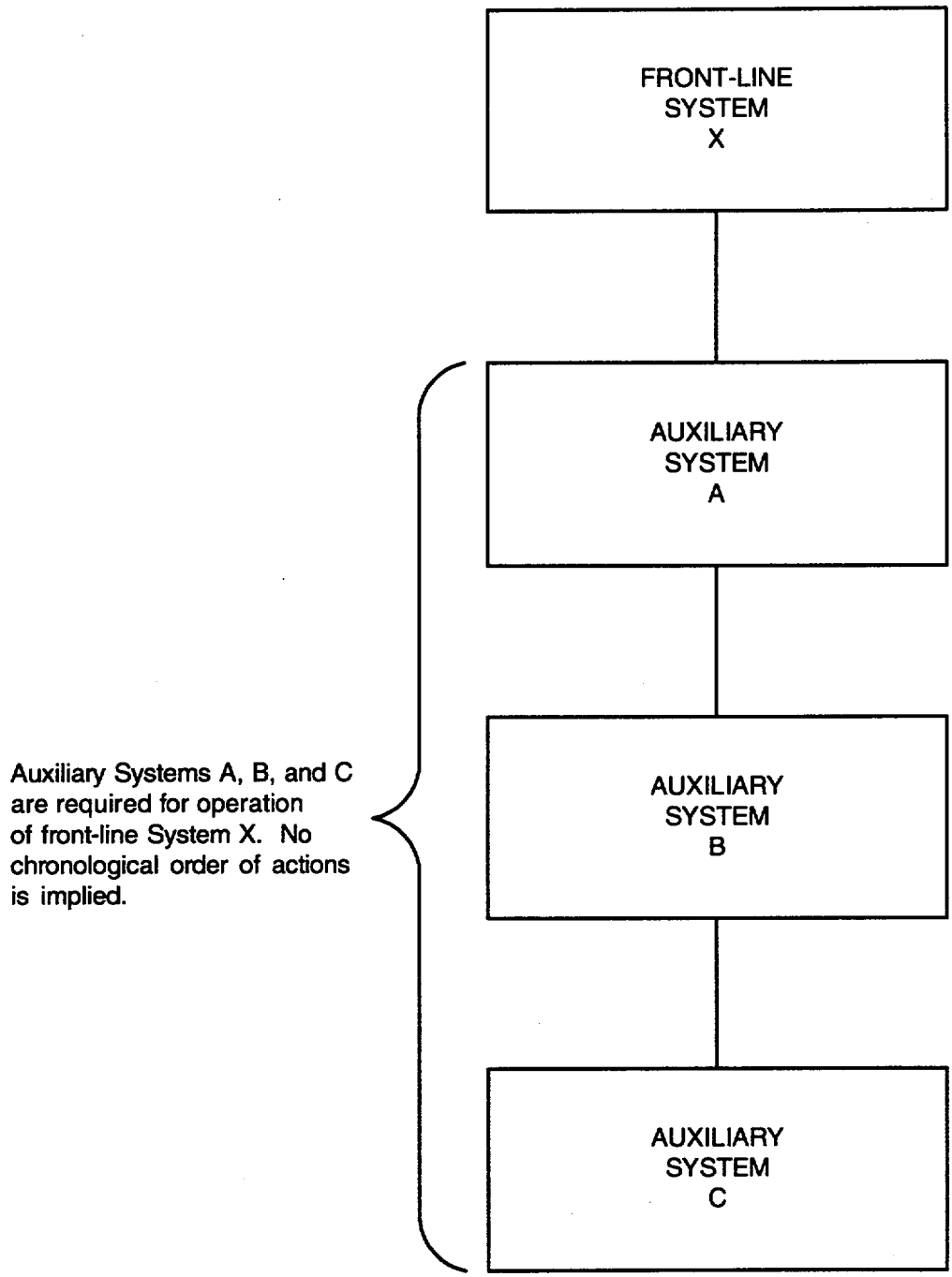

Figure 15C-3
Auxiliary System Diagram Format

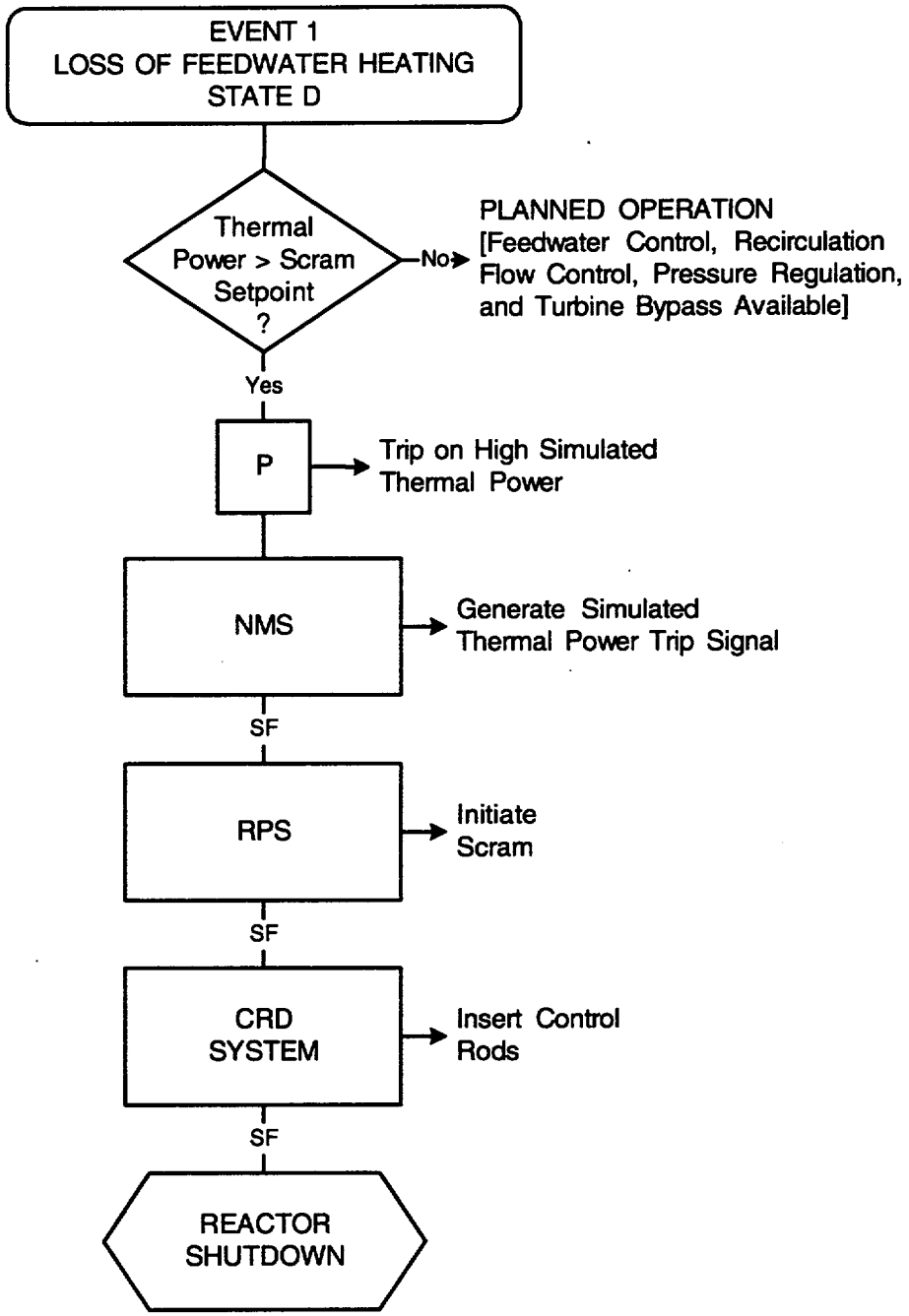

NOTES:

1. RPV isolation is not required for event mitigation.
2. Normal operating systems accomplish core cooling and pressure relief functions.
3. Event is described in 15C.4.1.1.1.

REV 18B 03/00

Figure 15C-4
Event Diagram
Loss of Feedwater Heating

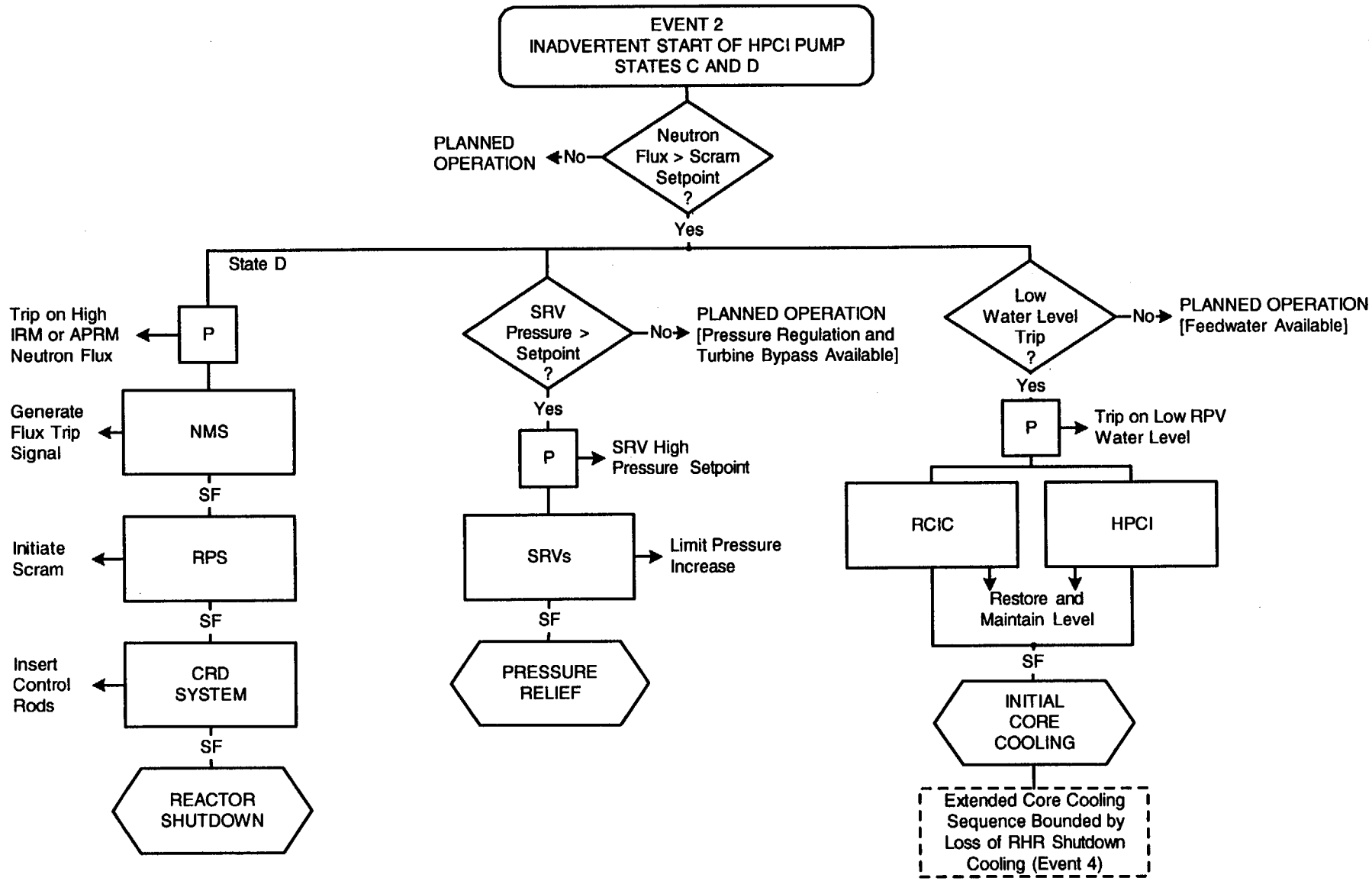

NOTES:

1. RPV isolation is not required for event mitigation.
2. Pressure relief is not required if SRV setpoint is not reached.
3. Normal operating systems accomplish core cooling if level remains above low water level trip.
4. Event is decribed in 15C.4.1.1.2.

REV 18B 03/00

Figure 15C-5
Event Diagram
Inadvertent Start of HPCI Pump

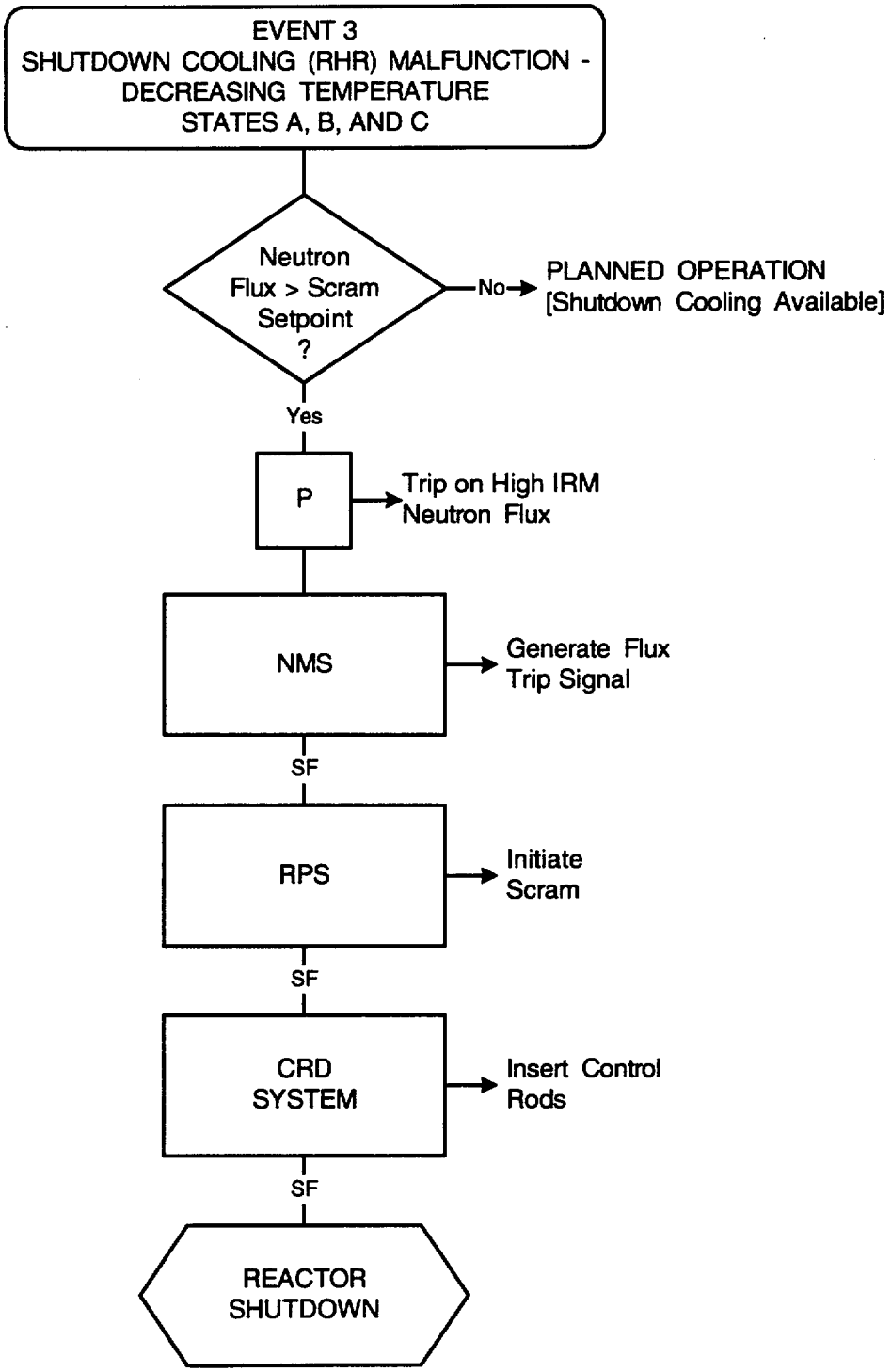

REV 18B 03/00

NOTES:

1. RPV isolation and pressure relief are not required for event mitigation.
2. Normal operating systems accomplish core cooling function.
3. Event is described in 15C.4.1.1.3.

Figure 15C-6
Event Diagram
Shutdown Cooling (RHR) Malfunction - Decreasing Temperature

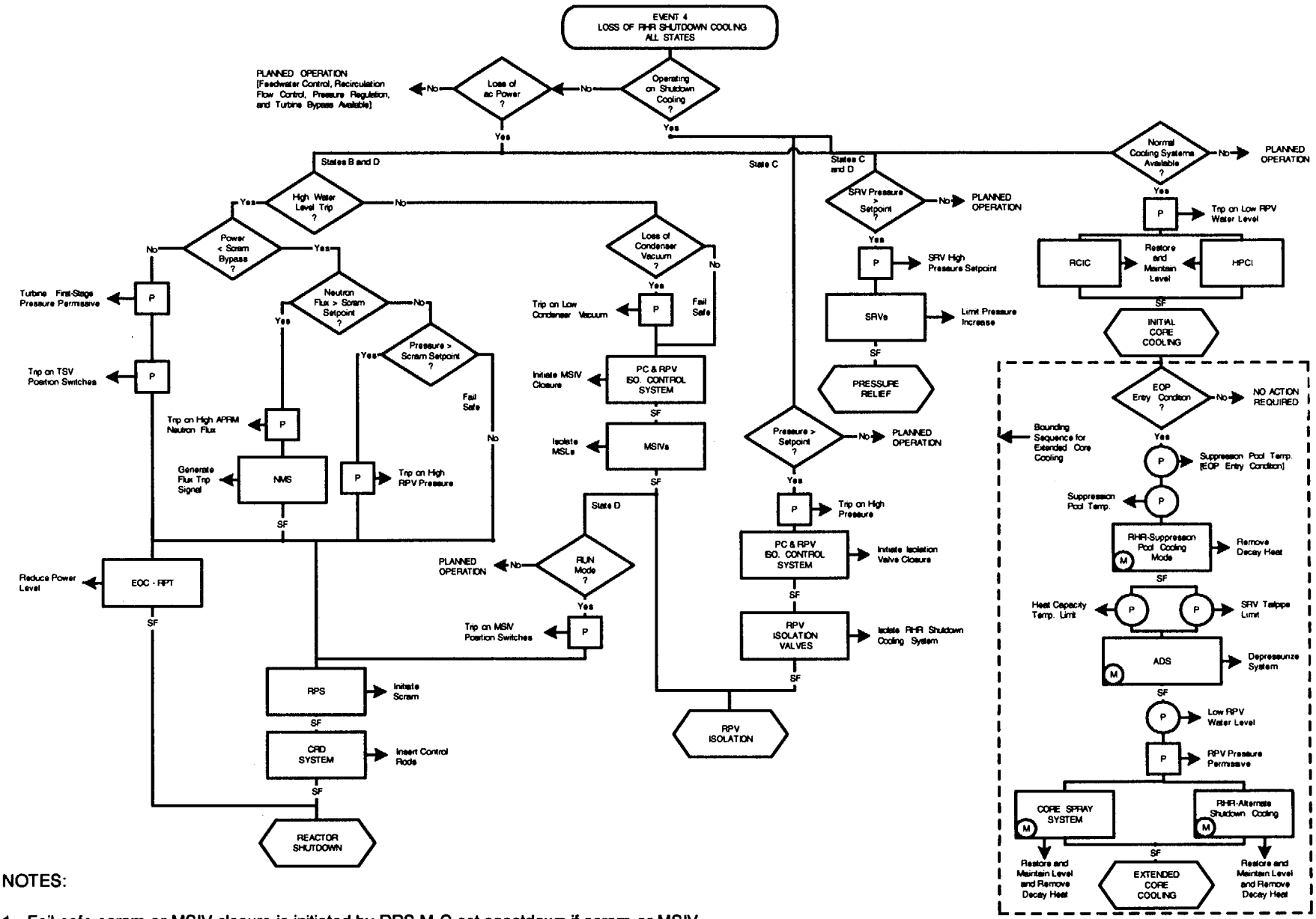

NOTES:

1. Fail-safe scram or MSIV closure is initiated by RPS M-G set coastdown if scram or MSIV closure has not been initiated.
2. Pressure relief is not required if SRV setpoint is not reached.
3. Normal operating systems accomplish core cooling if level remains above low water level trip.
4. Event is described in 15C.4.1.2.1.

REV 18B 03/00

Figure 15C-7
Event Diagram
Loss of RHR Shutdown Cooling

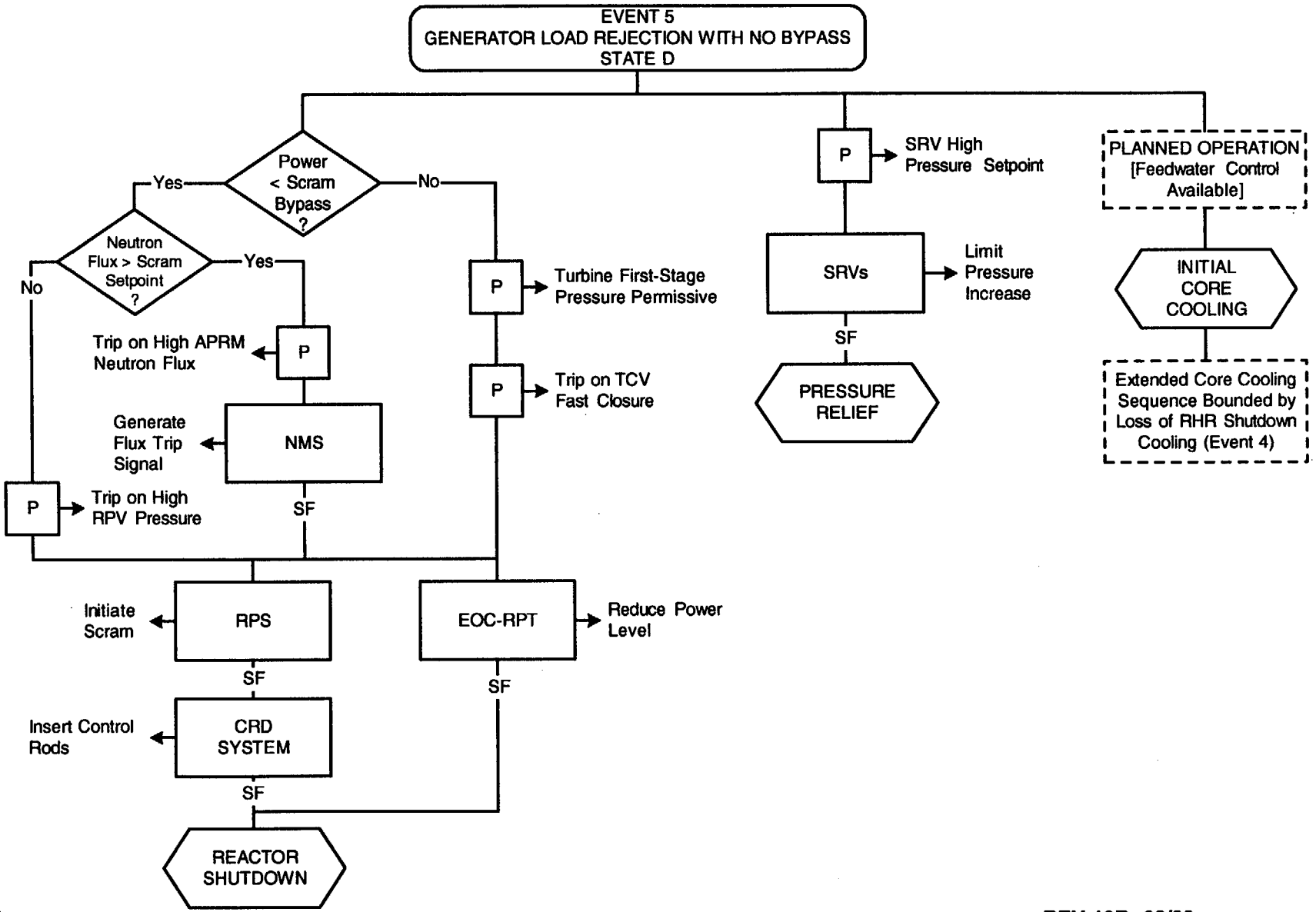

NOTES:

1. Normal operating systems accomplish initial core cooling; feedwater trip may be required due to high suppression pool level.
2. RPV isolation is not required for event mitigation.
3. Reactor shutdown is not required if scram setpoint is not reached.
4. Event is described in 15C.4.1.3.1.

Figure 15C-8
Event Diagram
Generator Load Rejection with No Bypass

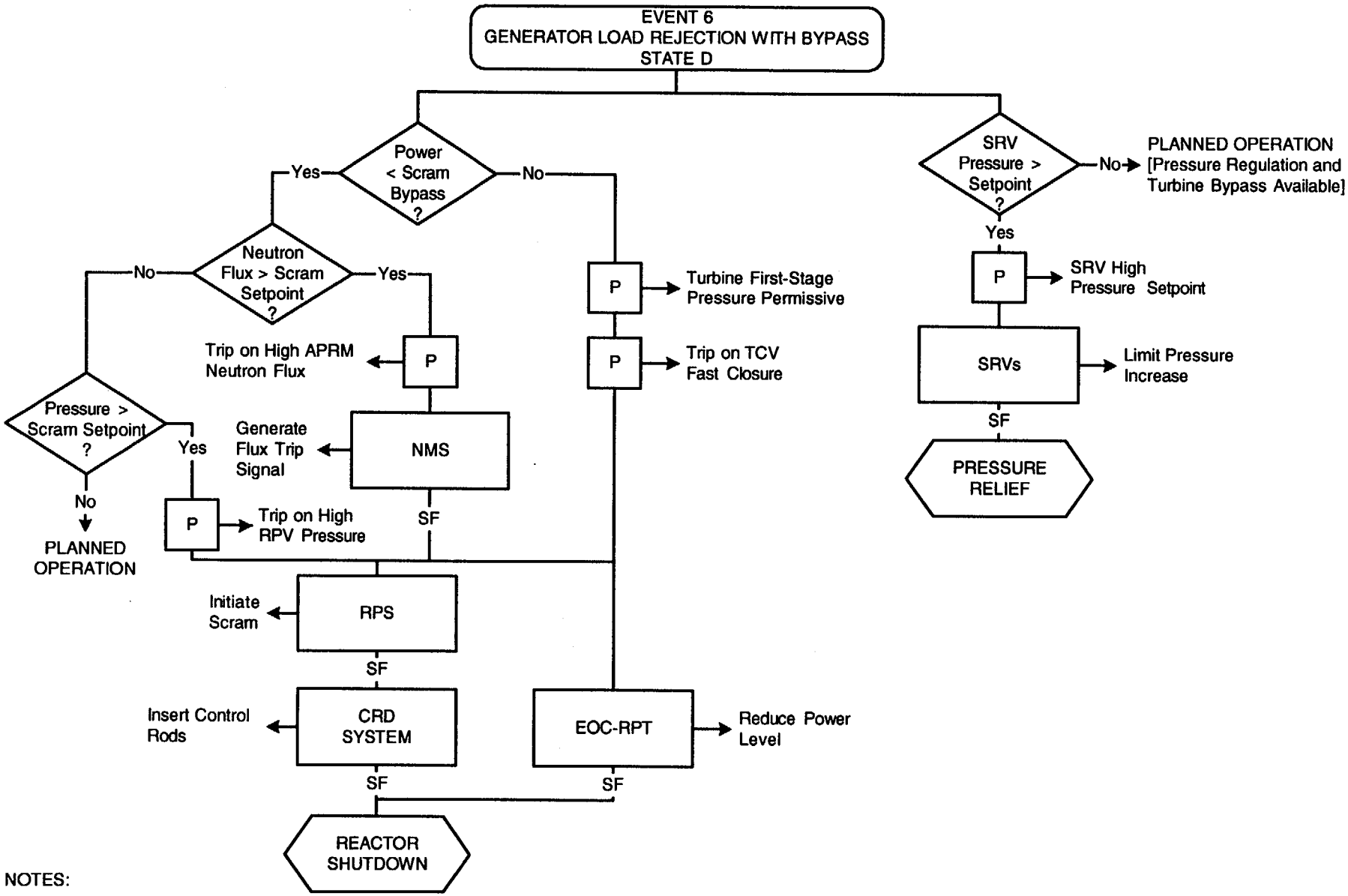

NOTES:

1. Normal operating systems accomplish core cooling function.
2. RPV isolation is not required for event mitigation.
3. Reactor shutdown is not required if scram setpoint is not reached.
4. Pressure relief is not required if SRV setpoint is not reached.
5. Event is described in 15C.4.1.3.2.

Figure 15C-9
Event Diagram
Generator Load Rejection with Bypass

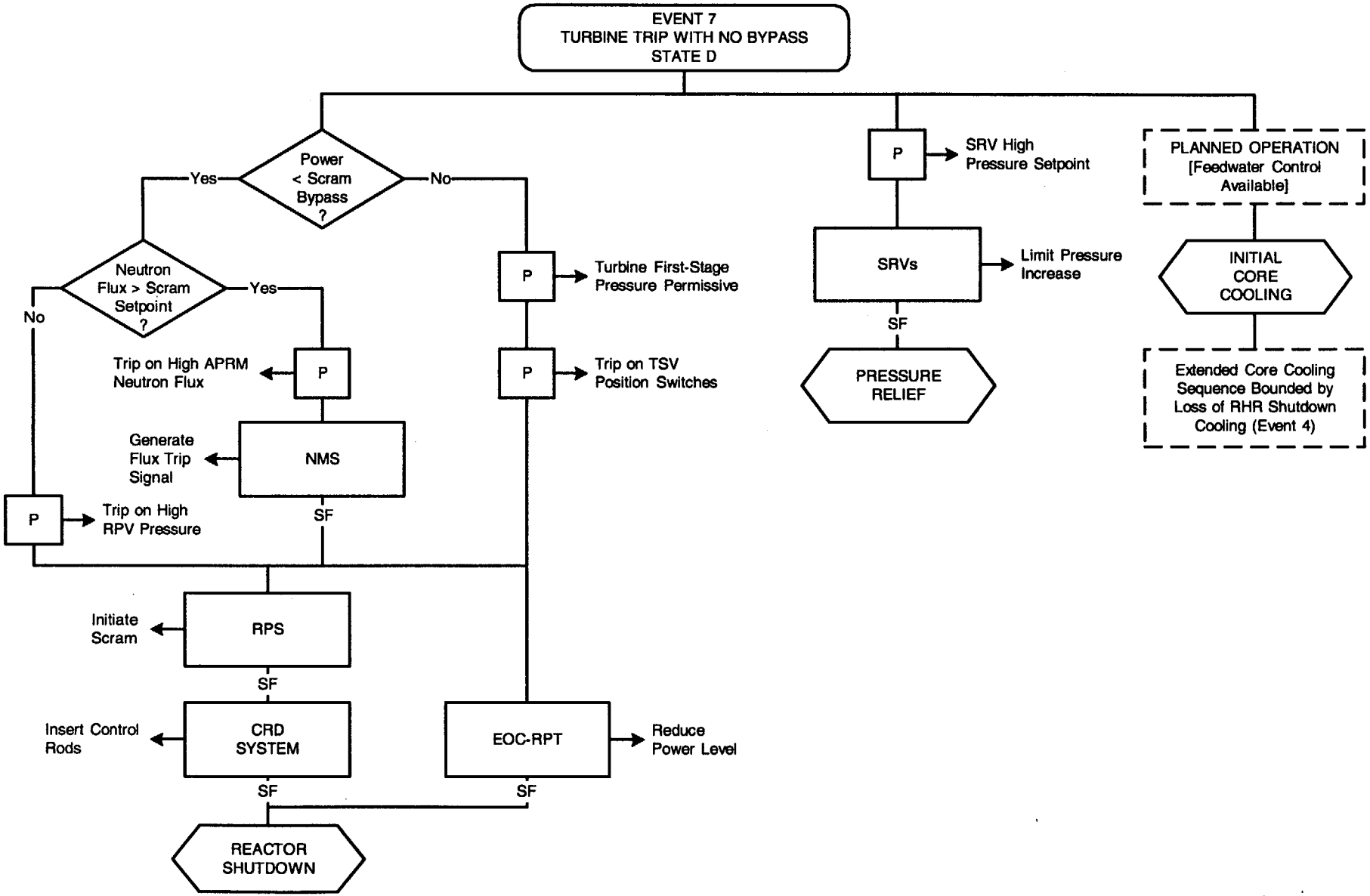

NOTES:

1. Normal operating systems accomplish initial core cooling; feedwater trip may be required due to high suppression pool level.
2. RPV isolation is not required for event mitigation.
3. Reactor shutdown is not required if scram setpoint is not reached.
4. Event is described in 15C.4.1.3.3.

Figure 15C-10
Event Diagram
Turbine Trip with No Bypass

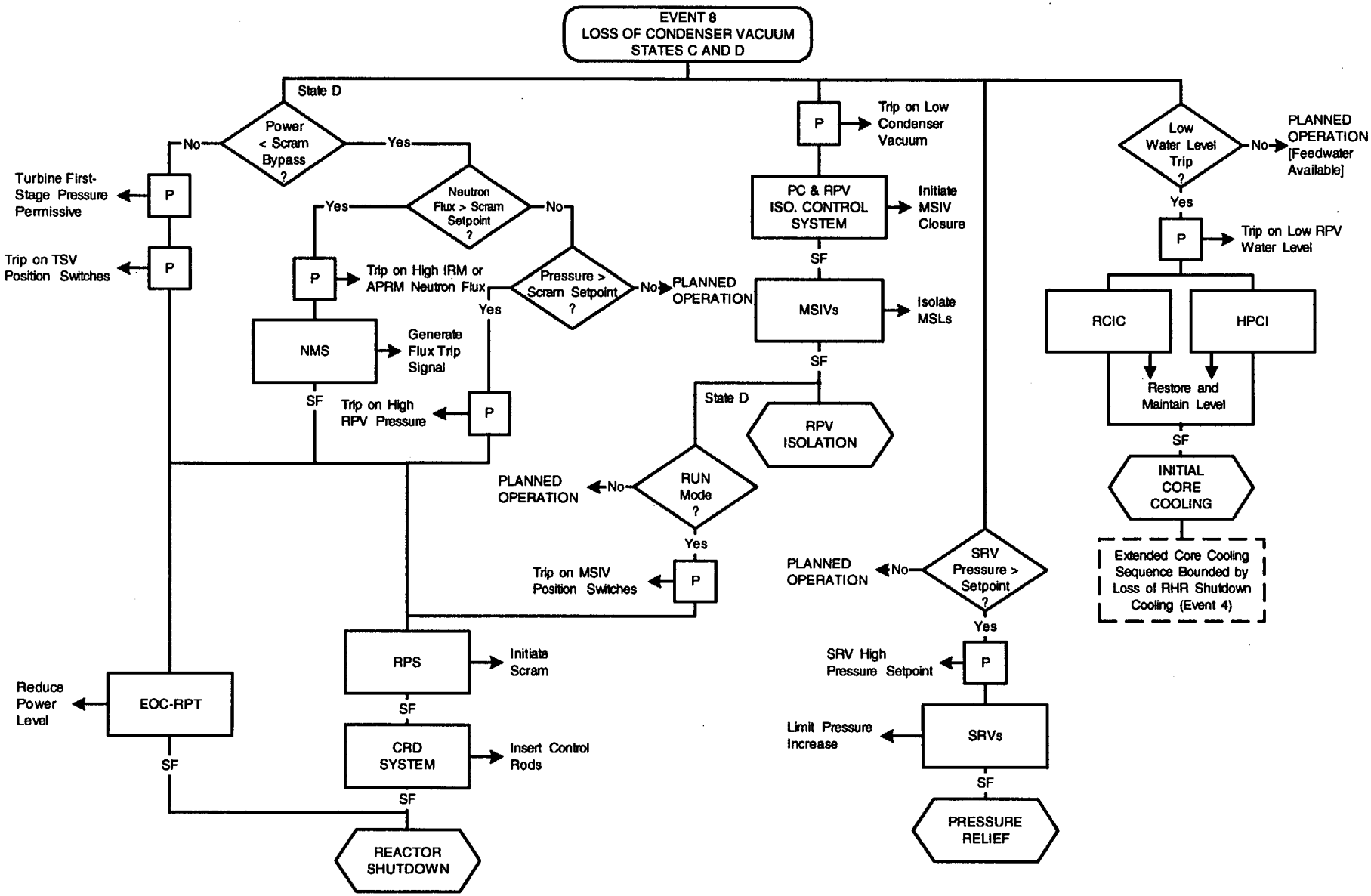

NOTES:

1. Reactor shutdown is not required if RPV pressure permissive to bypass scram is not reached.
2. Pressure relief is not required if SRV setpoint is not reached.
3. RPV isolation is not required if reactor is not in RUN mode.
4. Event is described in 15C.4.1.3.4.

Figure 15C-11
Event Diagram
Loss of Condenser Vacuum

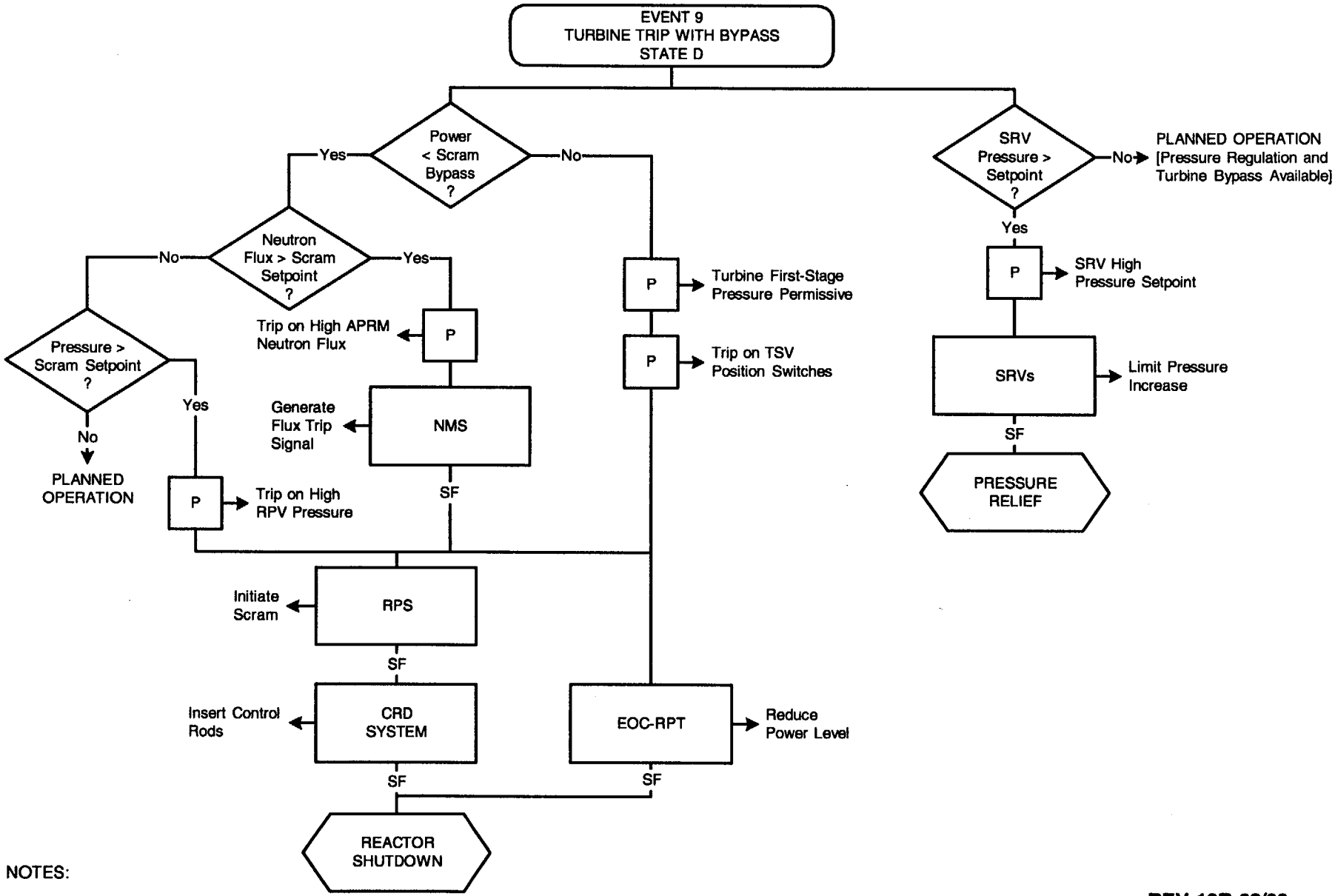

NOTES:

1. Normal operating systems accomplish core cooling function.
2. RPV isolation is not required for event mitigation.
3. Reactor shutdown is not required if scram setpoint is not reached.
4. Pressure relief is not required if SRV setpoint is not reached.
5. Event is described in 15C.4.1.3.5.

Figure 15C-12
Event Diagram
Turbine Trip with Bypass

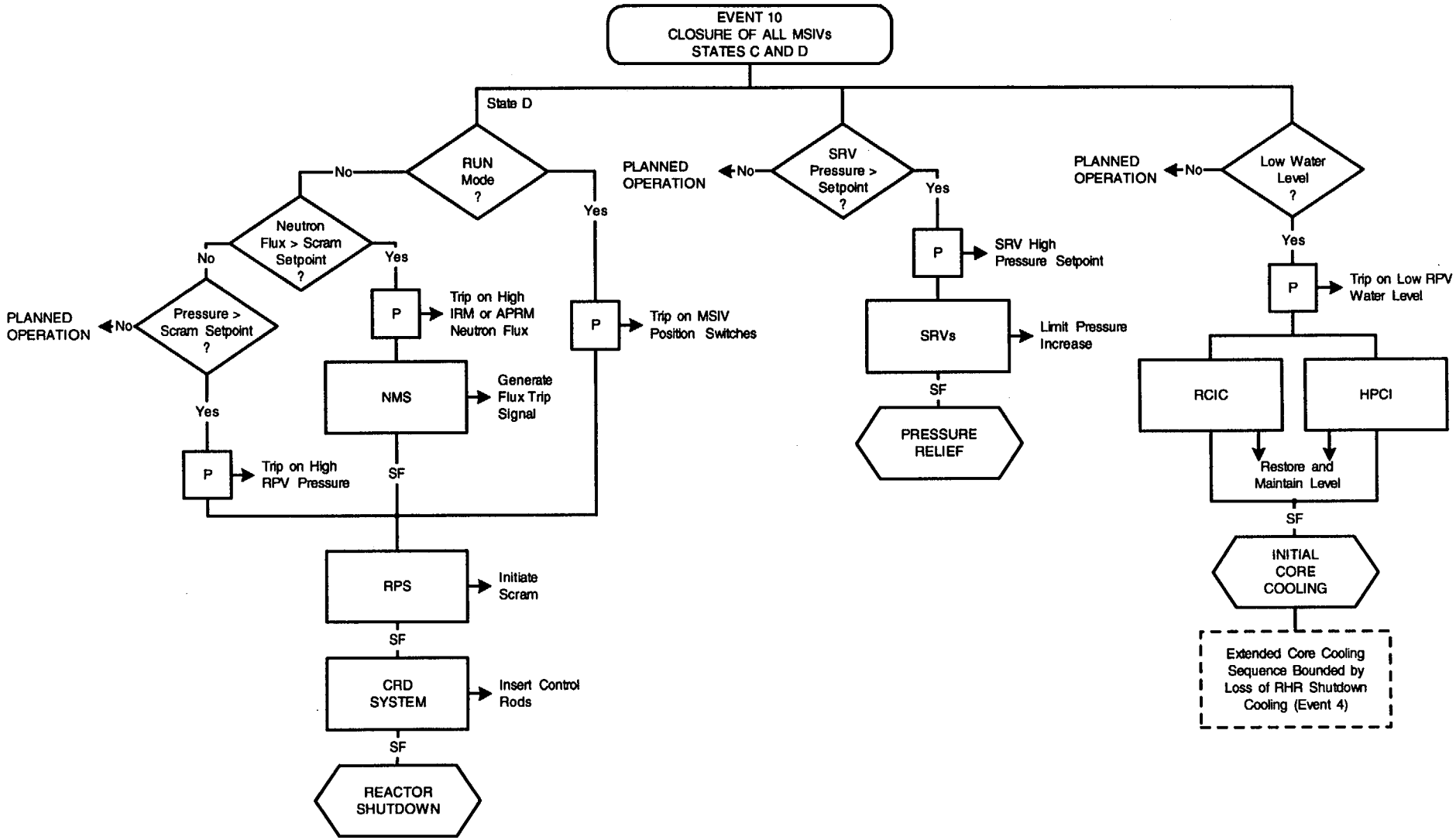

NOTES:

1. Reactor shutdown is not required if scram setpoint is not reached.
2. Pressure relief is not required if SRV setpoint is not reached.
3. Normal operating systems accomplish core cooling function if low water level does not occur.
4. Initiating event accomplishes RPV isolation.
5. Event is described in 15C.4.1.3.6.

Figure 15C-13
Event Diagram
Closure of All MSIVs

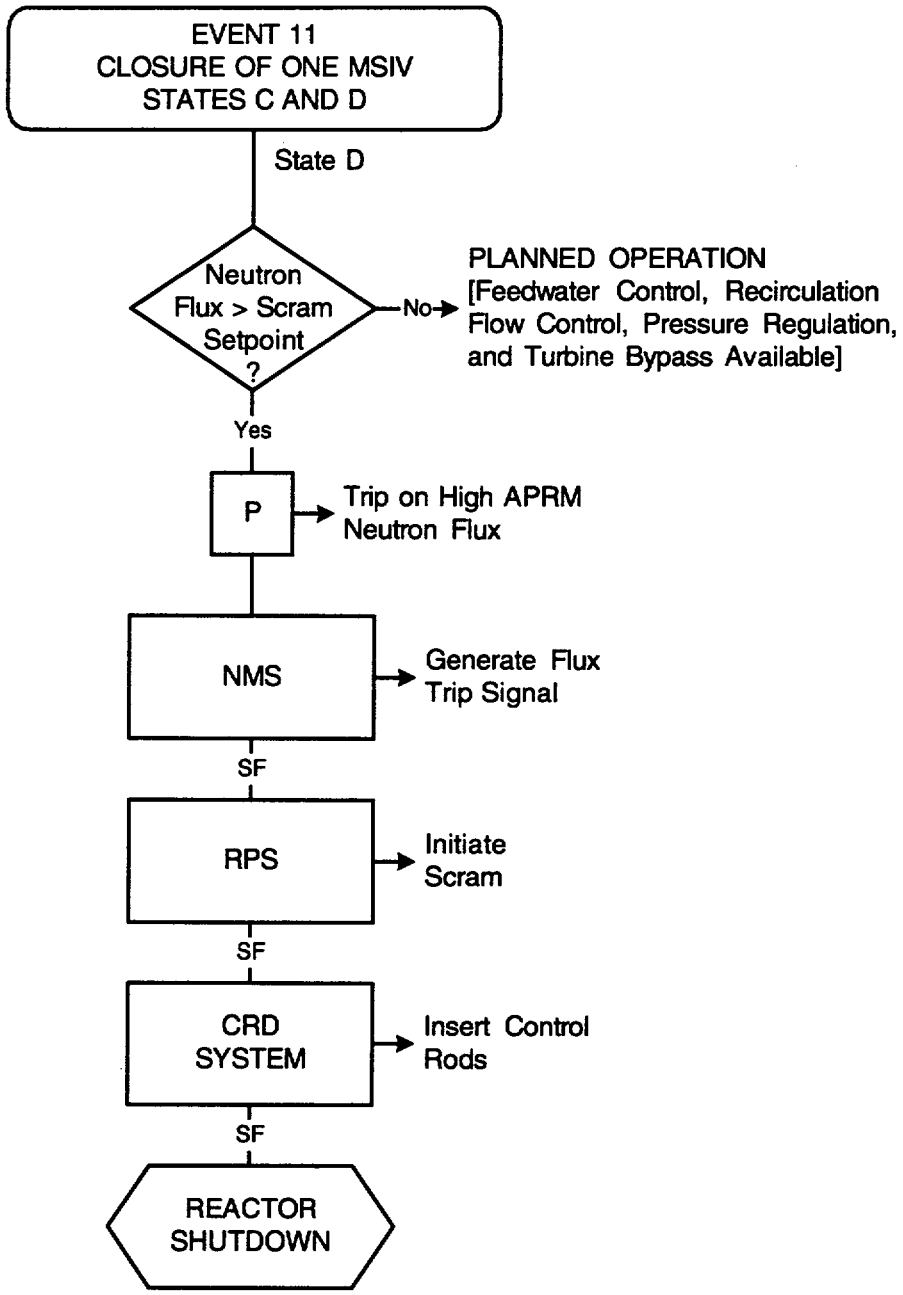

NOTES:

1. RPV isolation is not required for event mitigation.
2. Normal operating systems accomplish core cooling and pressure relief functions.
3. Event is described in 15C.4.1.3.7.

REV 18B 03/00

Figure 15C-14
Event Diagram
Closure of One MSIV

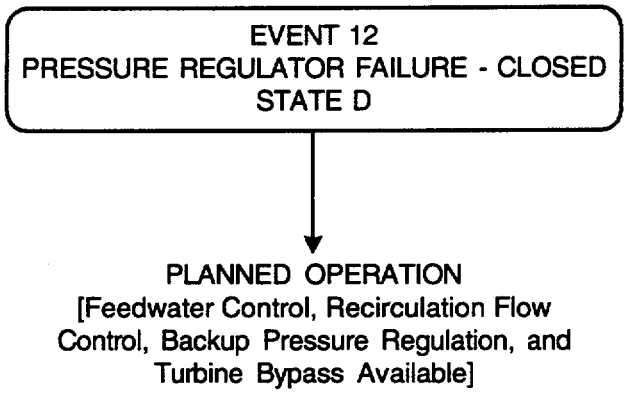

NOTES:

1. Reactor shutdown and RPV isolation are not required for event mitigation.
2. Normal operating systems accomplish core cooling and pressure relief functions.
3. Event is described in 15C.4.1.3.8.

Figure 15C-15
Event Diagram
Pressure Regulator Failure - Closed

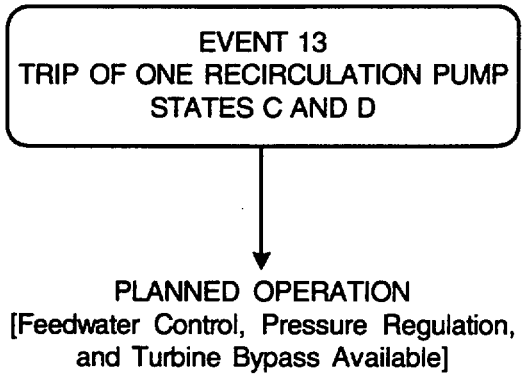

NOTES:

1. Reactor shutdown and RPV isolation are not required for event mitigation.
2. Normal operating systems accomplish core cooling and pressure relief functions.
3. Event is described in 15C.4.1.4.1.

REV 18B 03/00

Figure 15C-16
Event Diagram
Trip of One Recirculation Pump

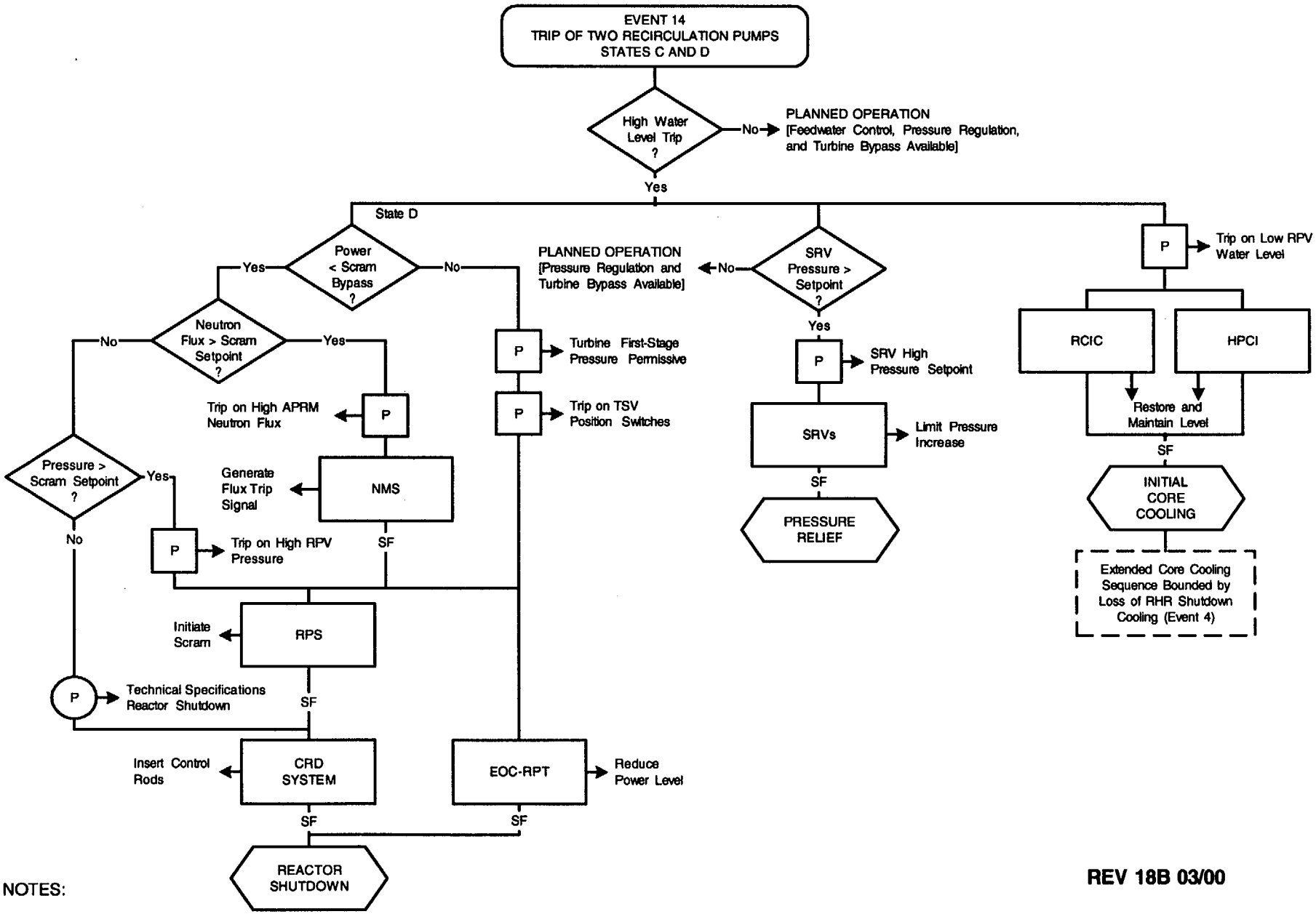

NOTES:

1. RPV isolation is not required for event mitigation.
2. Pressure relief is not required if SRV setpoint is not reached.
3. Technical Specifications require shutdown if recirculation pumps cannot be restarted.
4. Event is described in 15C.4.1.4.2.

Figure 15C-17
Event Diagram
Trip of Two Recirculation Pumps

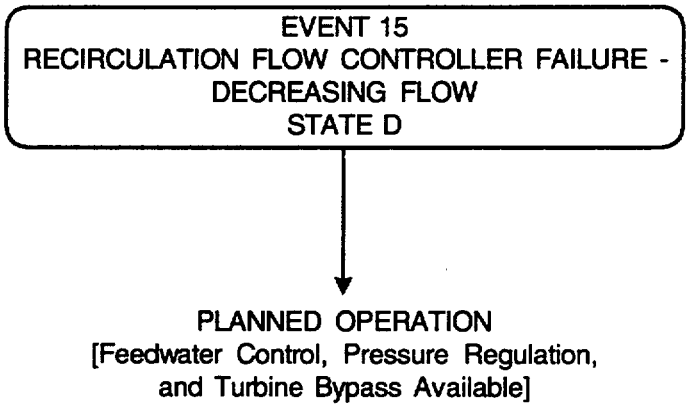

NOTES:

1. Reactor shutdown and RPV isolation are not required for event mitigation.
2. Normal operating systems accomplish core cooling and pressure relief functions.
3. Event is described in 15C.4.1.4.3.

REV 18B 03/00

Figure 15C-18
Event Diagram
Recirculation Flow Controller Failure - Decreasing Flow

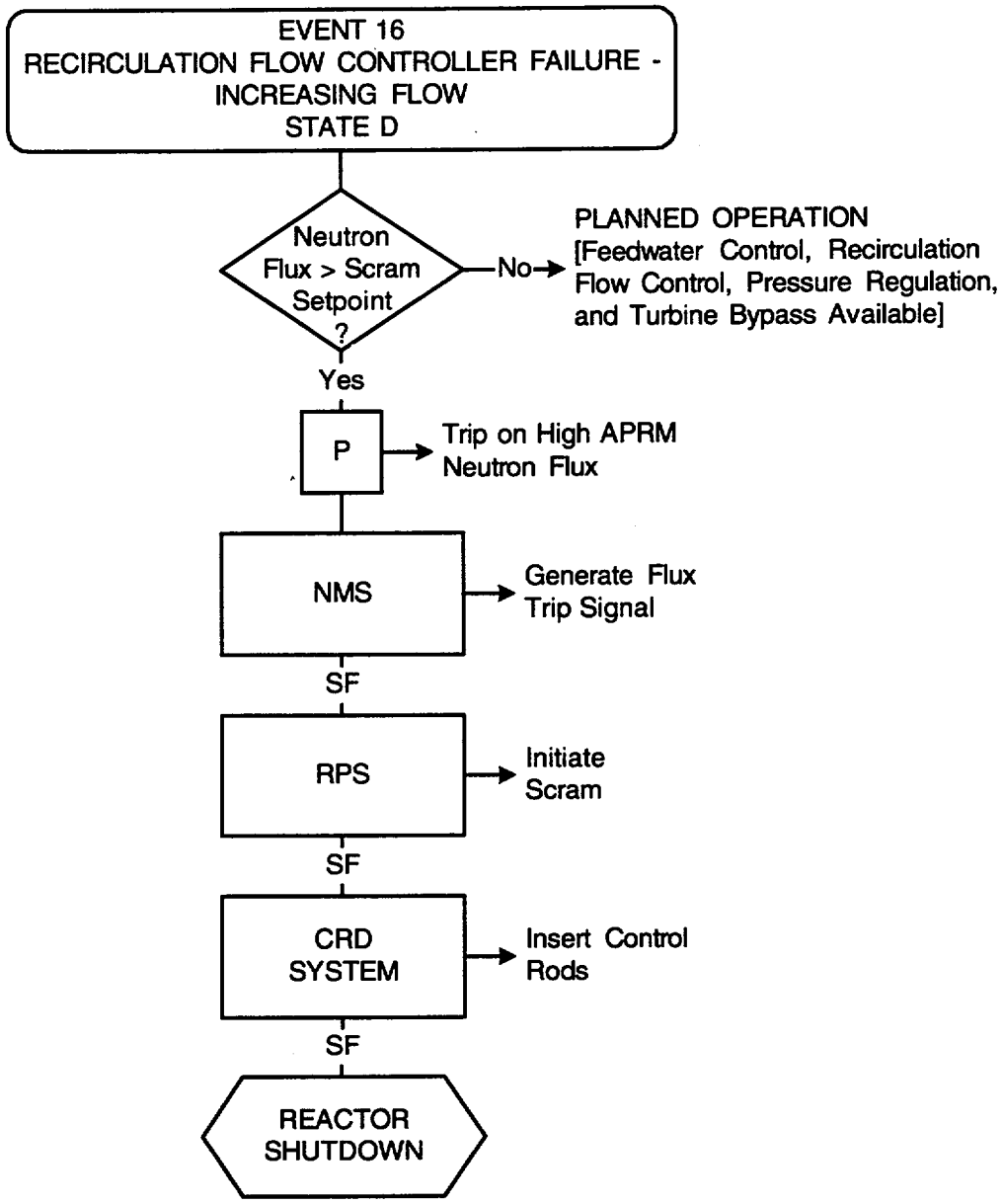

REV 18B 03/00

NOTES:

1. RPV isolation is not required for event mitigation.
2. Normal operating systems accomplish core cooling and pressure relief functions.
3. Event is described in 15C.4.1.5.1.

Figure 15C-19
Event Diagram
Recirculation Flow Controller Failure - Increasing Flow

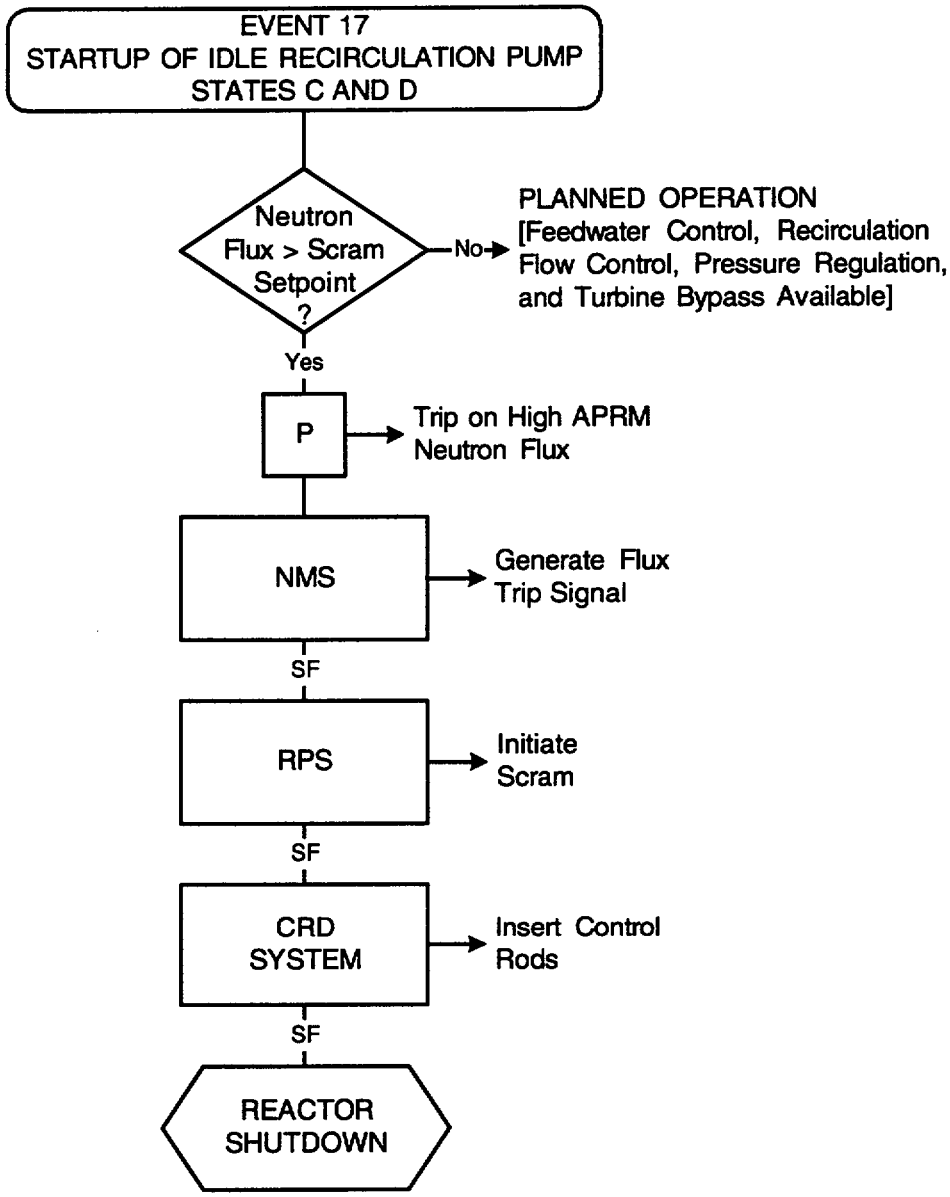

NOTES:

1. RPV isolation is not required for event mitigation.
2. Normal operating systems accomplish core cooling and pressure relief functions.
3. Event is described in 15C.4.1.5.2.

REV 18B 03/00

Figure 15C-20
Event Diagram
Startup of Idle Recirculation Pump

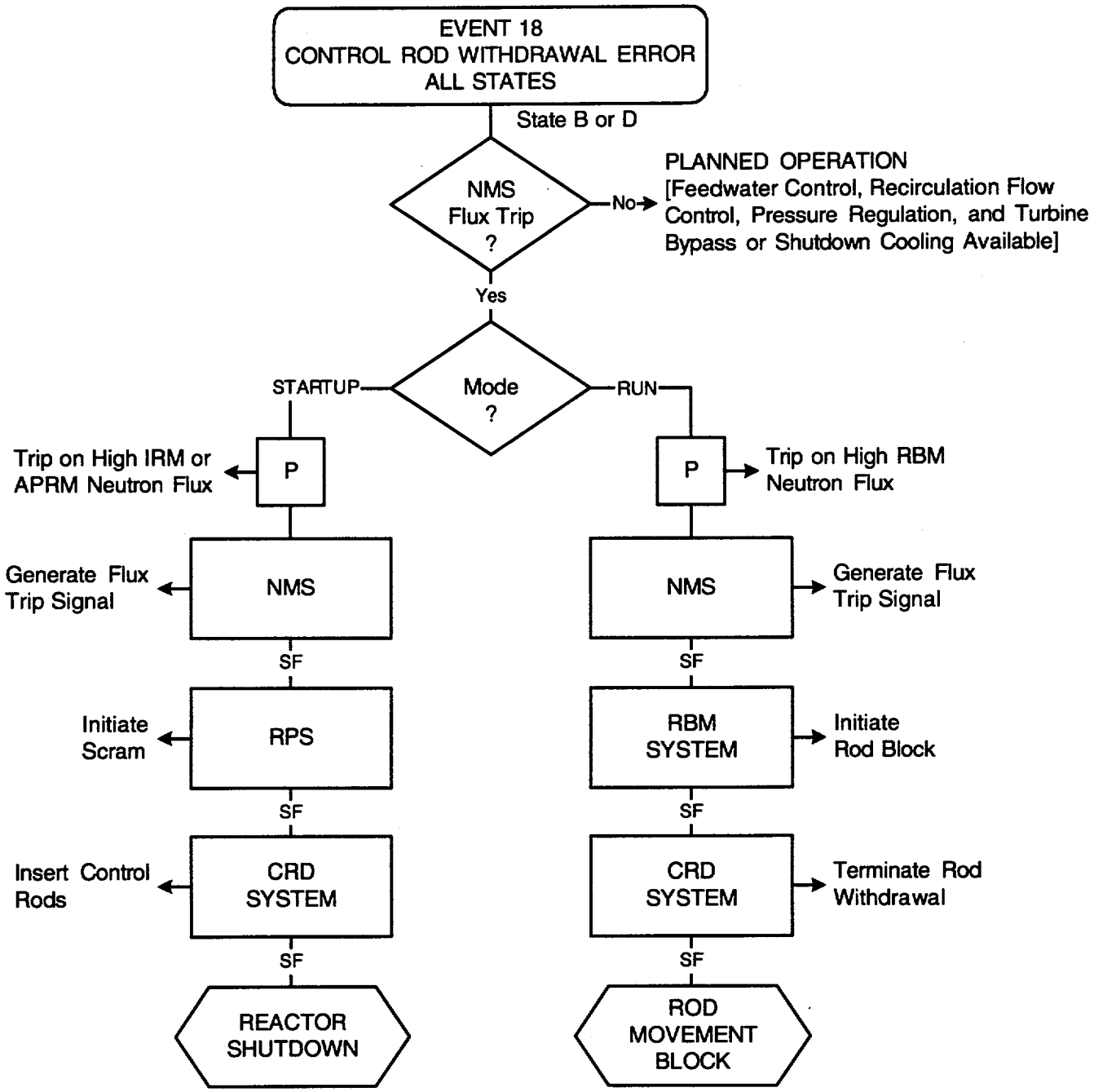

NOTES:

1. RPV isolation is not required for event mitigation.
2. Normal operating systems accomplish core cooling and pressure relief functions.
3. Event is described in 15C.4.1.6.1.

REV 18B 03/00

Figure 15C-21
Event Diagram
Control Rod Withdrawal Error

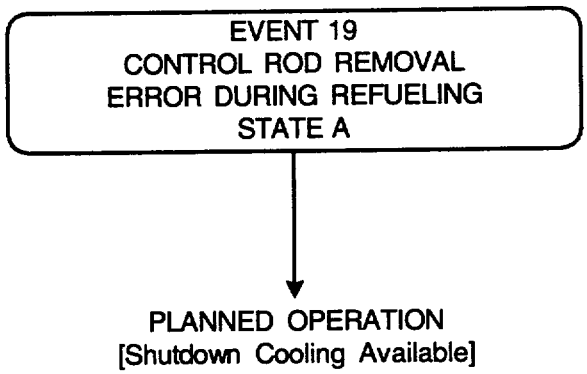

REV 18B 03/00

NOTES:

1. Reactor shutdown, RPV isolation, and pressure relief are not required for event mitigation.
2. Normal operating systems accomplish core cooling function.
3. Event is described in 15C.4.1.6.2.

Figure 15C-22
Event Diagram
Control Rod Removal
Error During Refueling

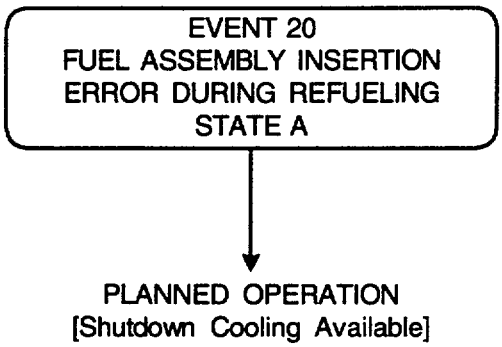

NOTES:

1. Reactor shutdown, RPV isolation, and pressure relief are not required for event mitigation.
2. Normal operating systems accomplish core cooling function.
3. Event is described in 15C.4.1.6.3

REV 18B 03/00

Figure 15C-23
Event Diagram
Fuel Assembly Insertion
Error During Refueling

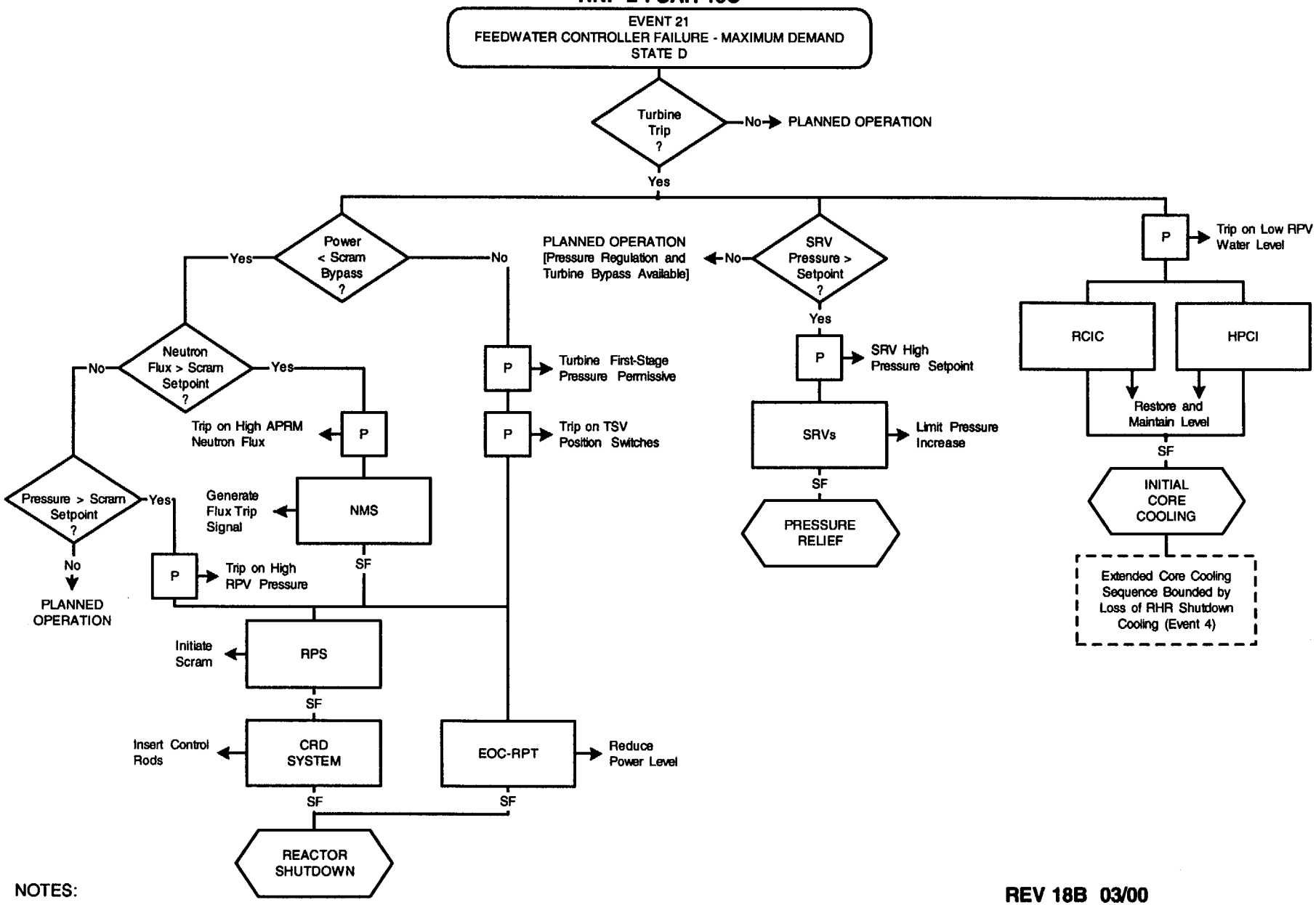

NOTES:

1. RPV isolation is not required for event mitigation.
2. Reactor shutdown is not required if scram setpoint is not reached.
3. Pressure relief is not required if SRV setpoint is not reached.
4. Event is described in 15C.4.1.7.1.

Figure 15C-24
Event Diagram
Feedwater Controller Failure - Maximum Demand

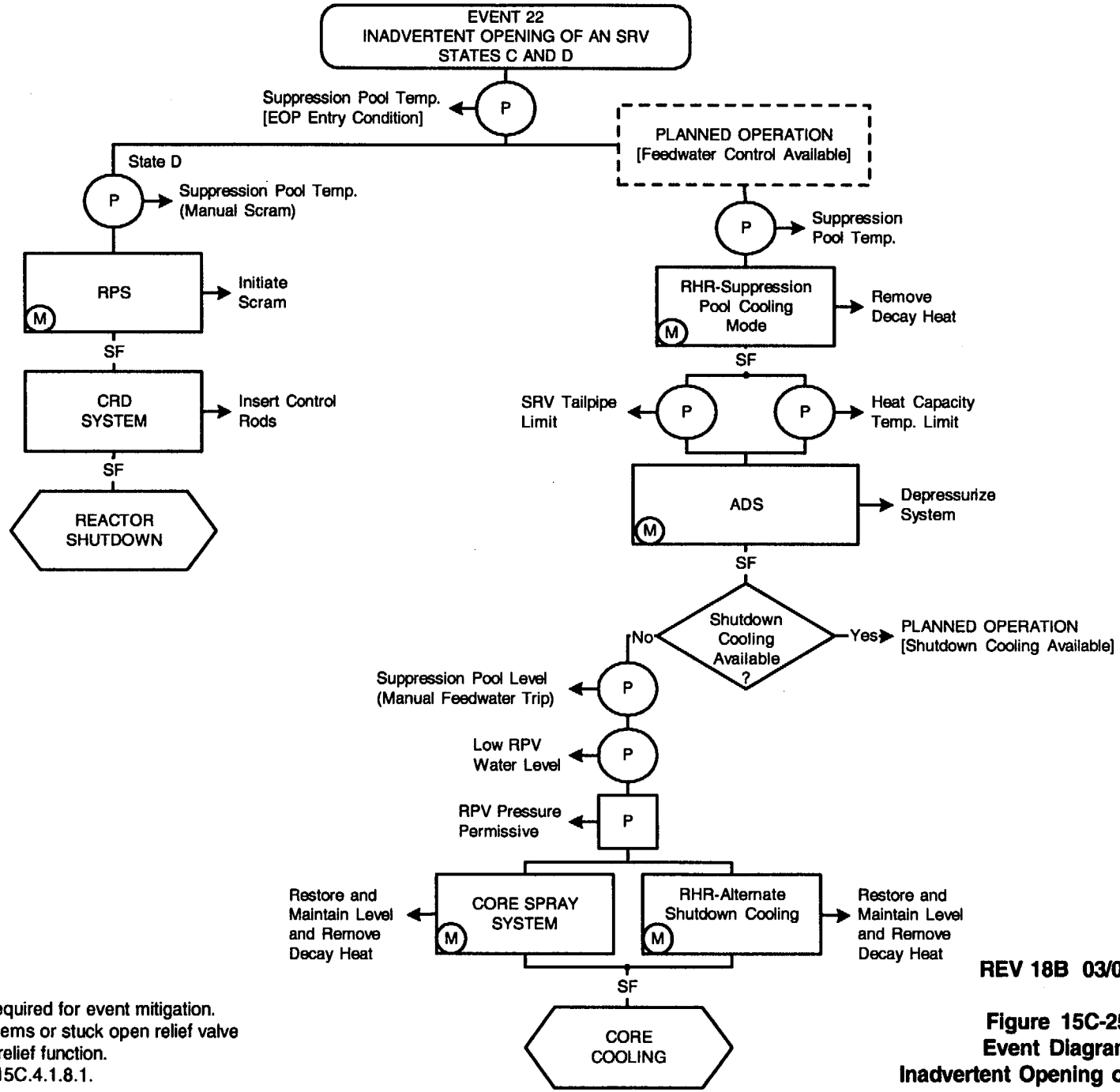

NOTES:

1. RPV isolation is not required for event mitigation.
2. Normal operating systems or stuck open relief valve accomplish pressure relief function.
3. Event is described in 15C.4.1.8.1.

REV 18B 03/00

Figure 15C-25
Event Diagram
Inadvertent Opening of an SRV

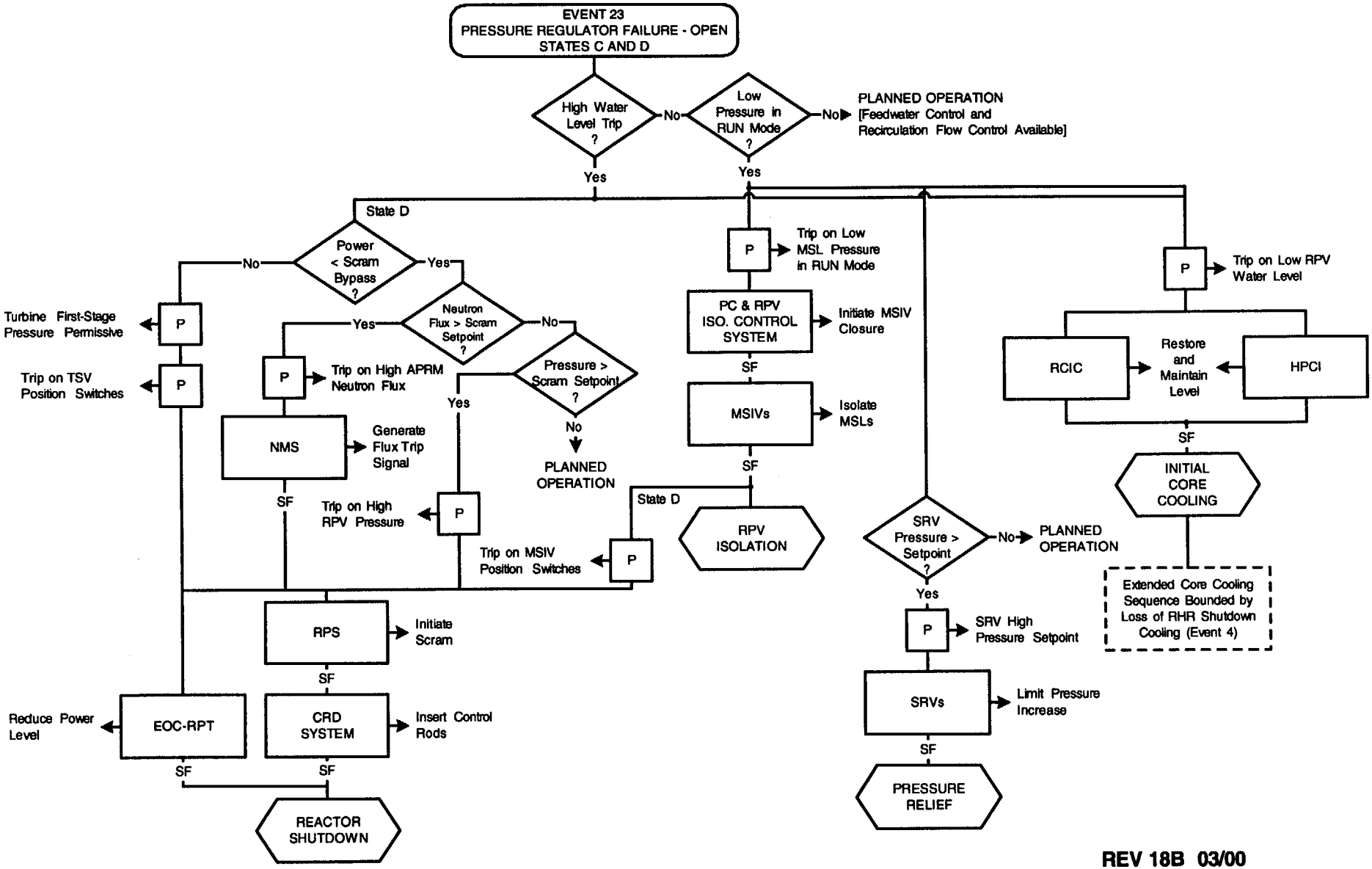

REV 18B 03/00

NOTES:

1. Pressure relief is not required unless SRV setpoint is reached.
2. Event is described in 15C.4.1.8.2.

Figure 15C-26
Event Diagram
Pressure Regulator Failure - Open

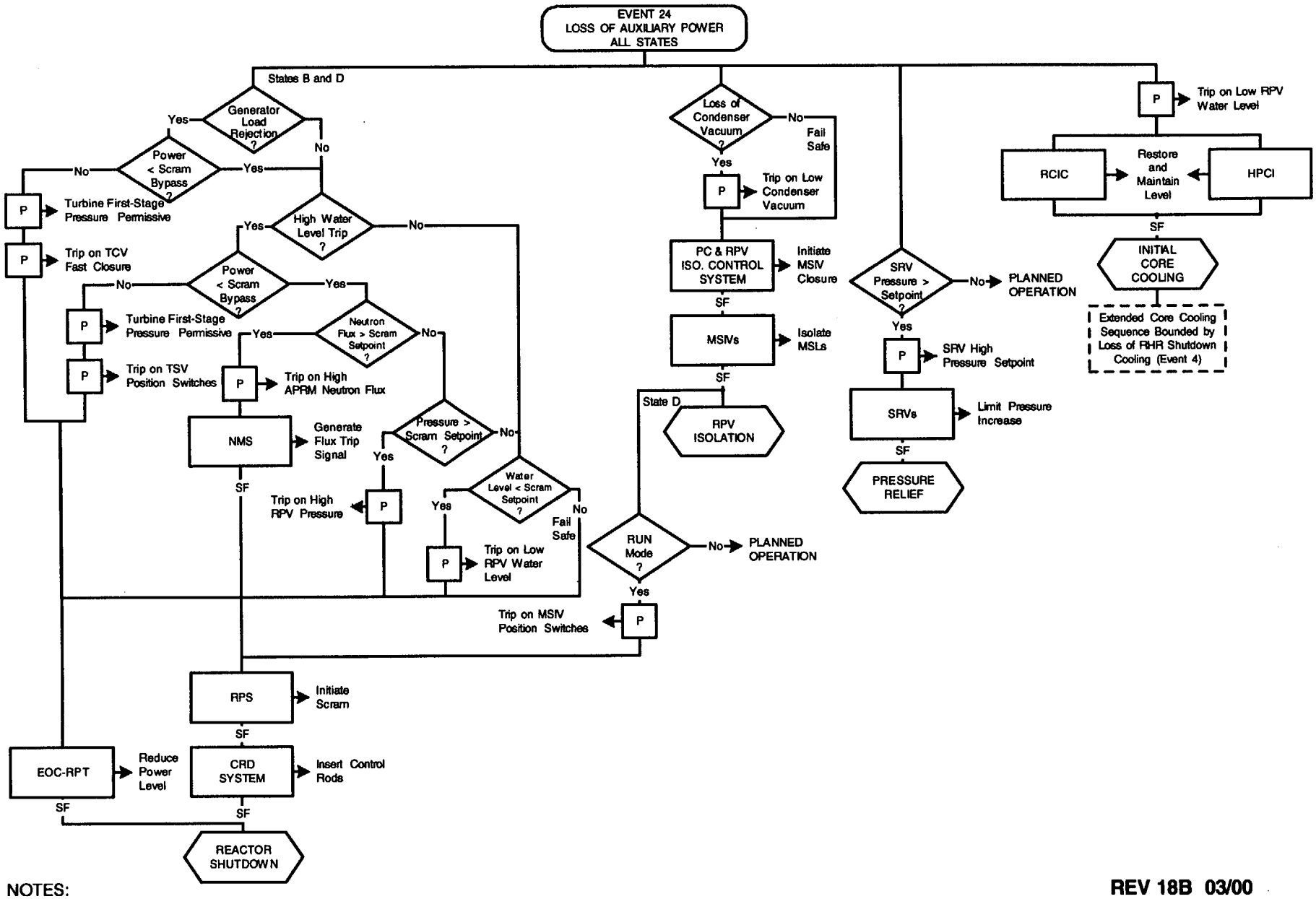

NOTES:

1. RPS M-G set coastdown initiates fail-safe scram or MSIV closure if not previously initiated.
2. Pressure relief is not required if SRV setpoint is not reached.
3. Event 4, Loss of Shutdown Cooling, bounds loss of auxiliary power when operating in RHR shutdown cooling mode.
4. Event is described in 15C.4.1.8.3.

Figure 15C-27
Event Diagram
Loss of Auxiliary Power

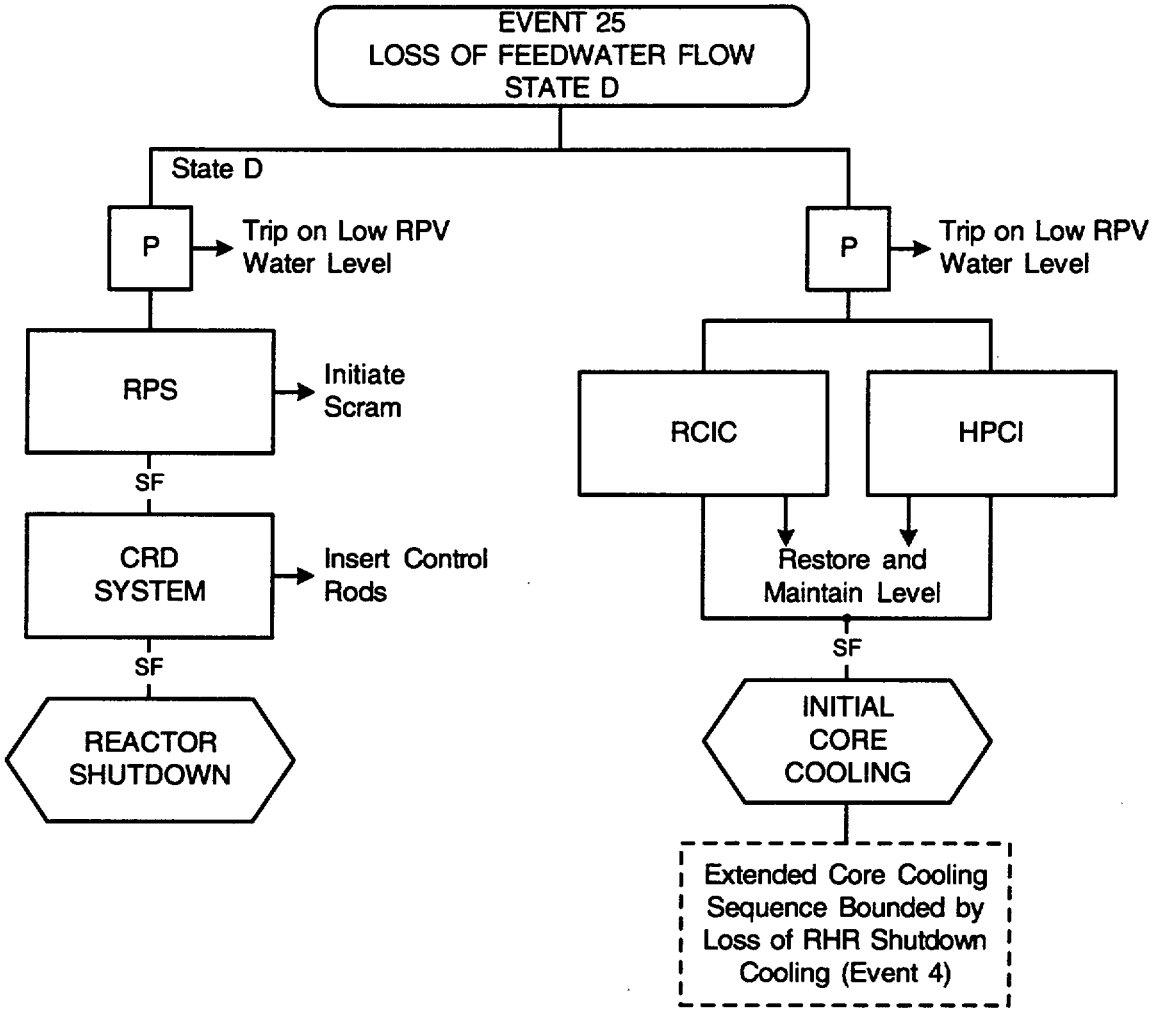

NOTES:

1. RPV isolation is not required for event mitigation.
2. Normal operating systems accomplish pressure relief function.
3. Event is described in 15C.4.1.8.4.

Figure 15C-28
Event Diagram
Loss of Feedwater Flow

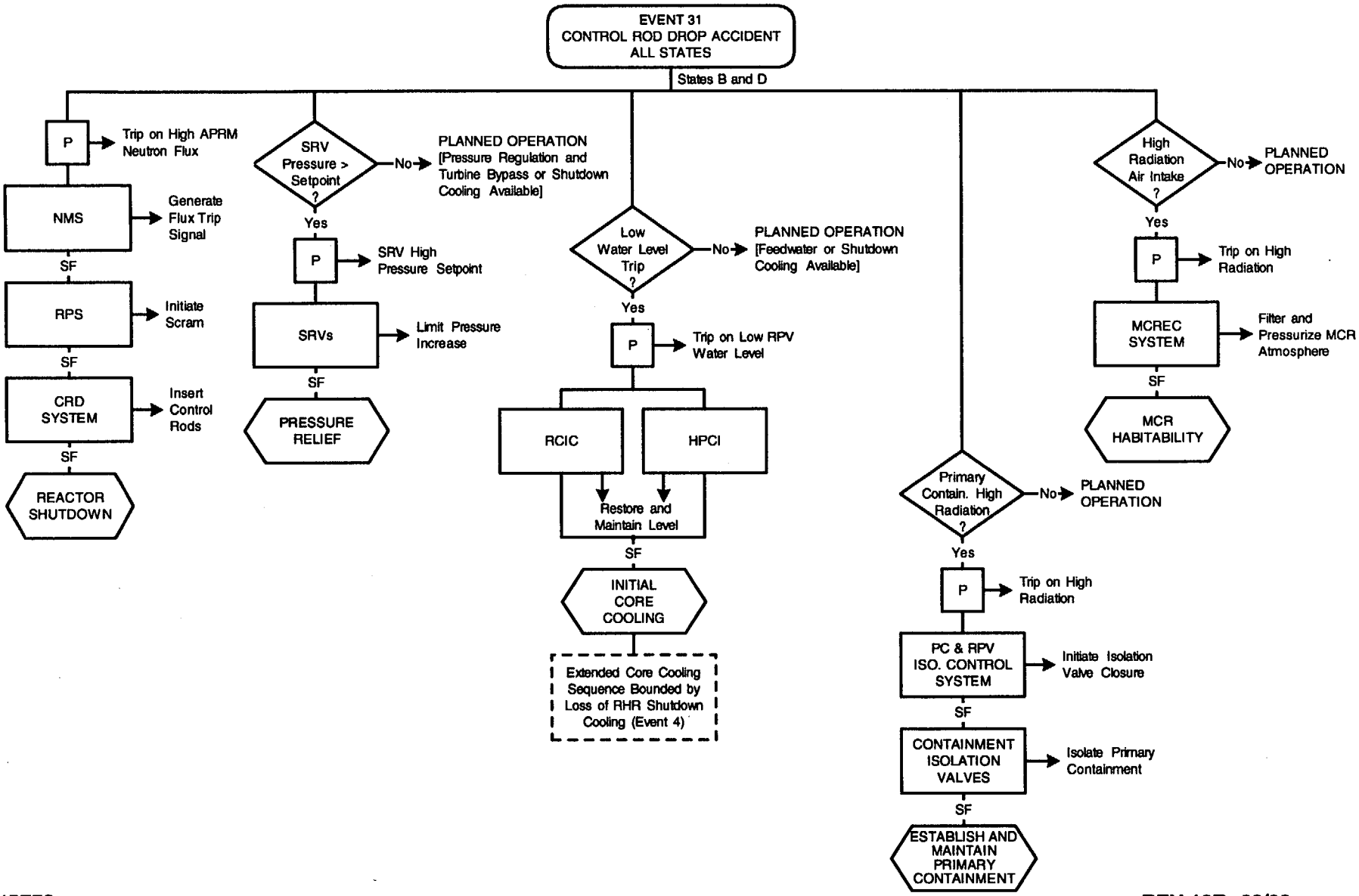

NOTES:

1. RPV isolation is not required for event mitigation.
2. MCR habitability is not required if high radiation in MCR air intake does not occur.
3. Primary containment isolation is not required if radiation trip setpoint is not reached.
4. Event is described in 15C.4.2.1.

Figure 15C-29
Event Diagram
Control Rod Drop Accident

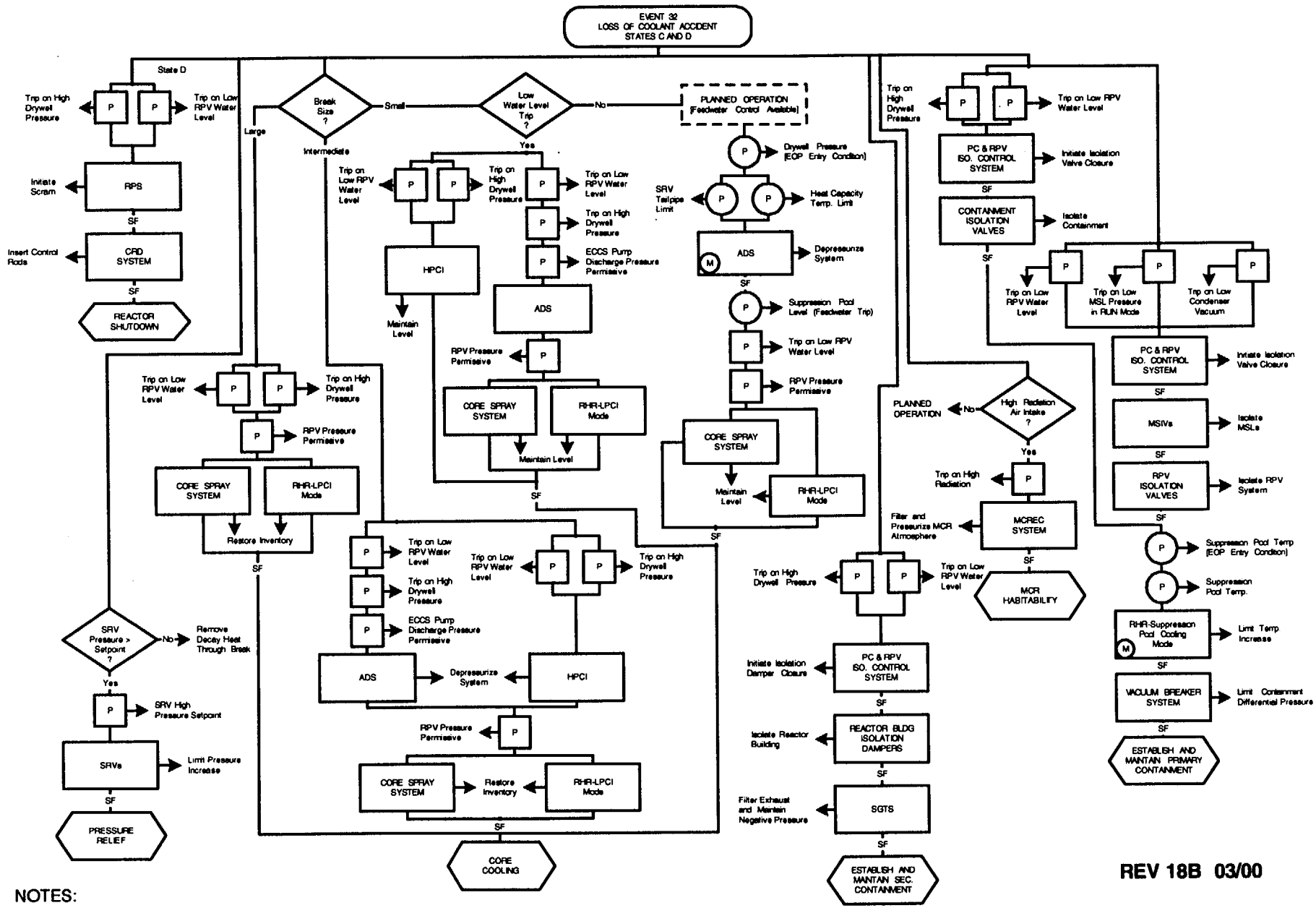

NOTES:

1. MCR habitability is not required if high radiation in MCR air intake does not occur.
2. RPV isolation occurs as a part of the containment isolation process.
3. Event is described in 15C.4.2.2.

REV 18B 03/00

Figure 15C-30
Event Diagram
Loss of Coolant Accident

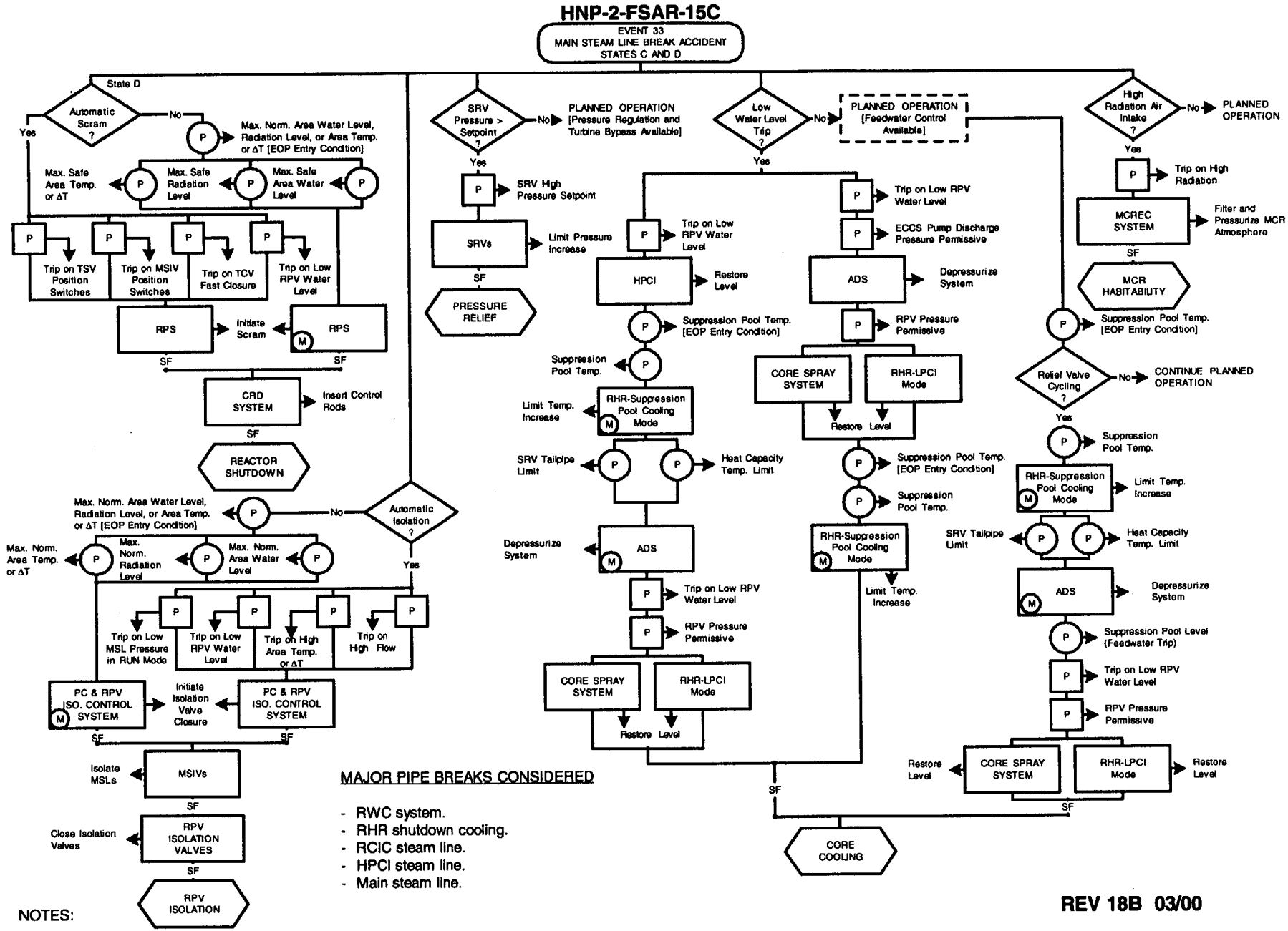

MAJOR PIPE BREAKS CONSIDERED

- RWC system.
- RHR shutdown cooling.
- RCIC steam line.
- HPCI steam line.
- Main steam line.

NOTES:

1. Primary and secondary containments are not required for event mitigation.
2. MCR habitability is not required if high radiation in MCR air intake does not occur.
3. Major pipe breaks considered by event are listed above.
4. Event is described in 15C.4.2.3.

REV 18B 03/00

Figure 15C-31
Event Diagram
Main Steam Line Break Accident

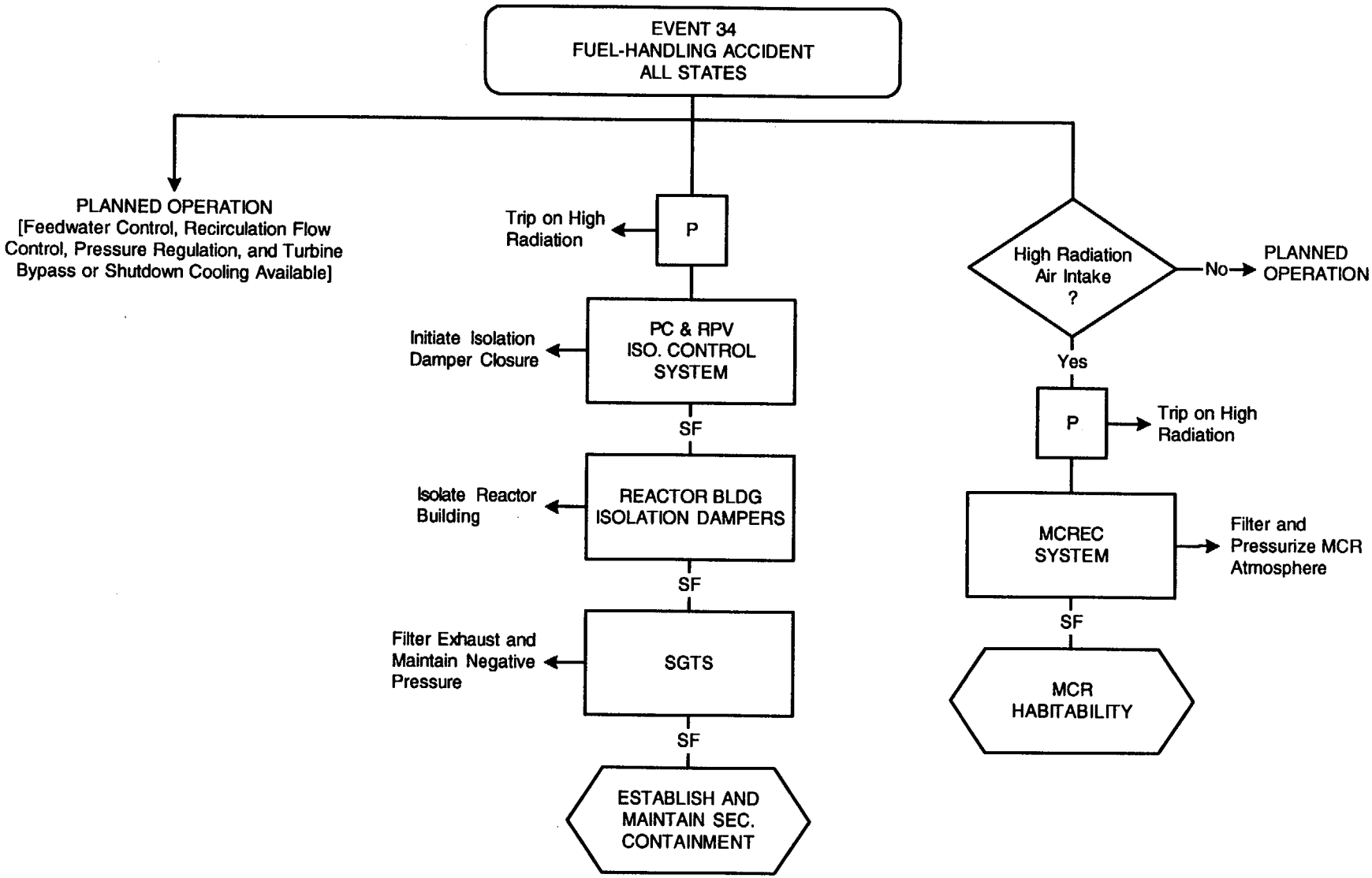

NOTES:

1. Scram, RPV isolation, and primary containment isolation are not required for event mitigation.
2. Normal operating systems accomplish core cooling and pressure relief functions.
3. MCR habitability is not required if high radiation in MCR air intake does not occur.
4. Event is described in 15C.4.2.4.

Figure 15C-32
Event Diagram
Fuel-Handling Accident

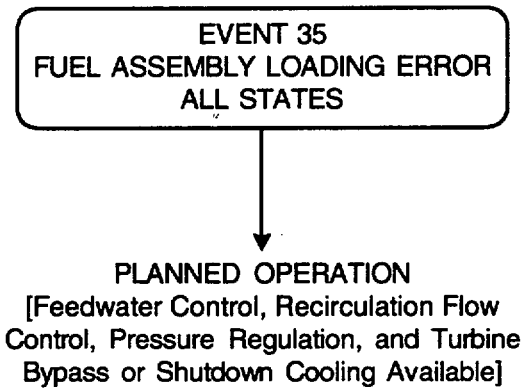

NOTES:

1. Reactor shutdown, RPV isolation, primary containment, secondary containment, and MCR habitability are not required for event mitigation.
2. Normal operating systems accomplish core cooling and pressure relief functions.
3. Event is described in 15C.4.2.5.

REV 18B 03/00

Figure 15C-33
Event Diagram
Fuel Assembly Loading Error

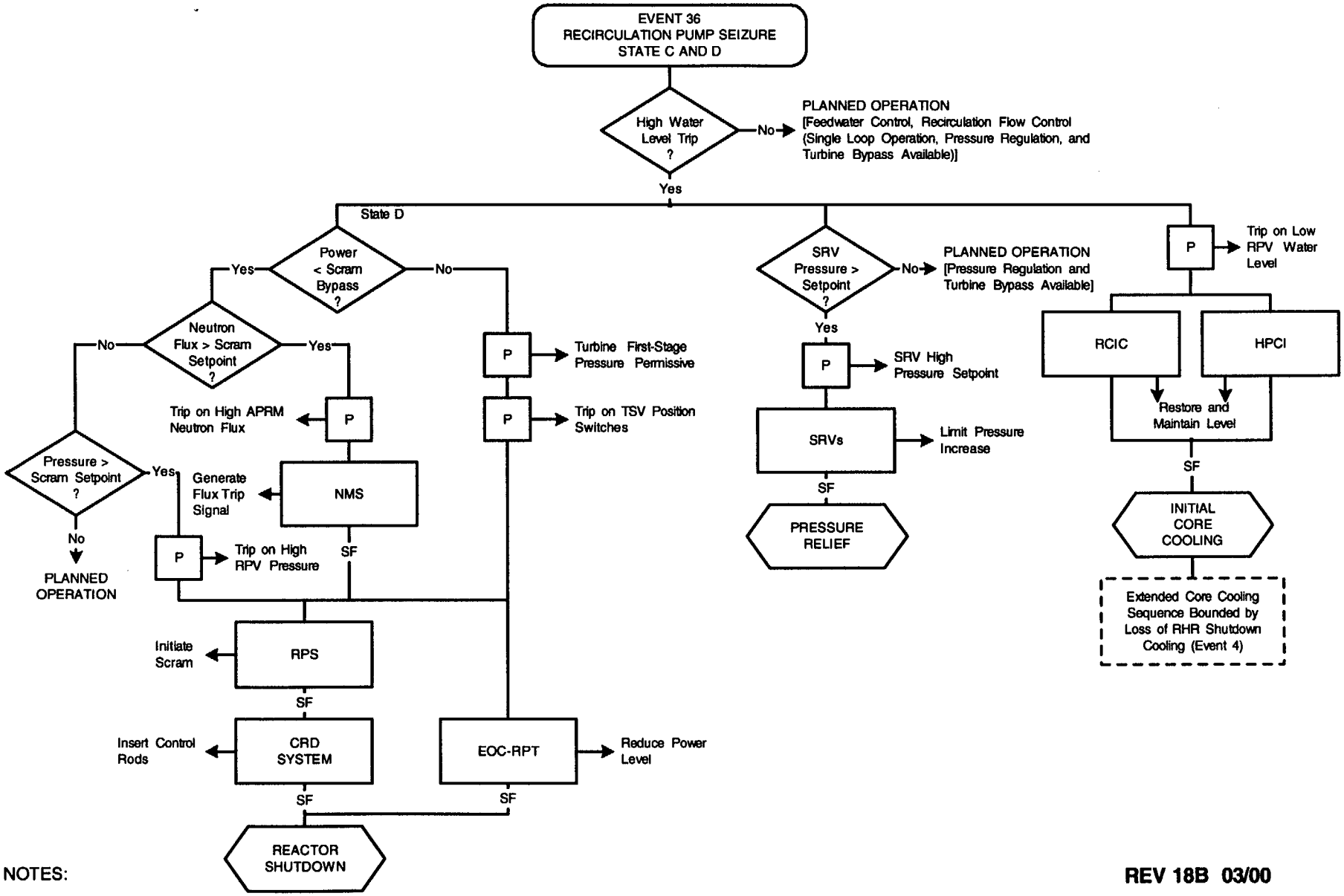

NOTES:

1. RPV isolation, primary containment, secondary containment, and MCR habitability are not required for event mitigation.
2. Reactor shutdown is not required if scram setpoint is not reached.
3. Pressure relief is not required if SRV setpoint is not reached.
4. Event is described in 15C.4.2.6.

Figure 15C-34
Event Diagram
Recirculation Pump Seizure

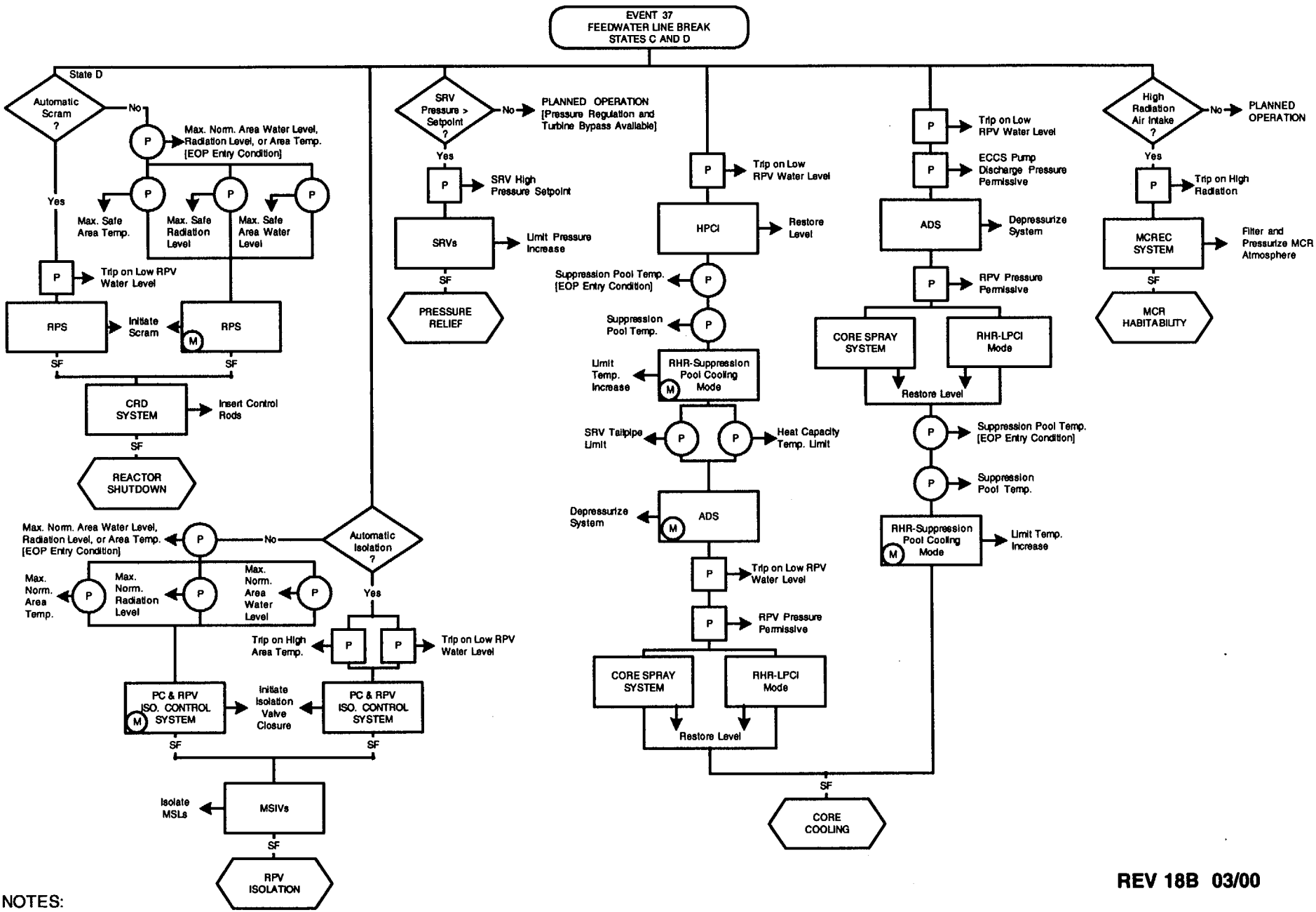

NOTES:

1. Primary and secondary containments are not required for event mitigation.
2. MCR habitability is not required if high radiation in MCR air intake does not cccur.
3. Event is described in 15C.4.2.7.

REV 18B 03/00

Figure 15C-35
Event Diagram
Feedwater Line Break

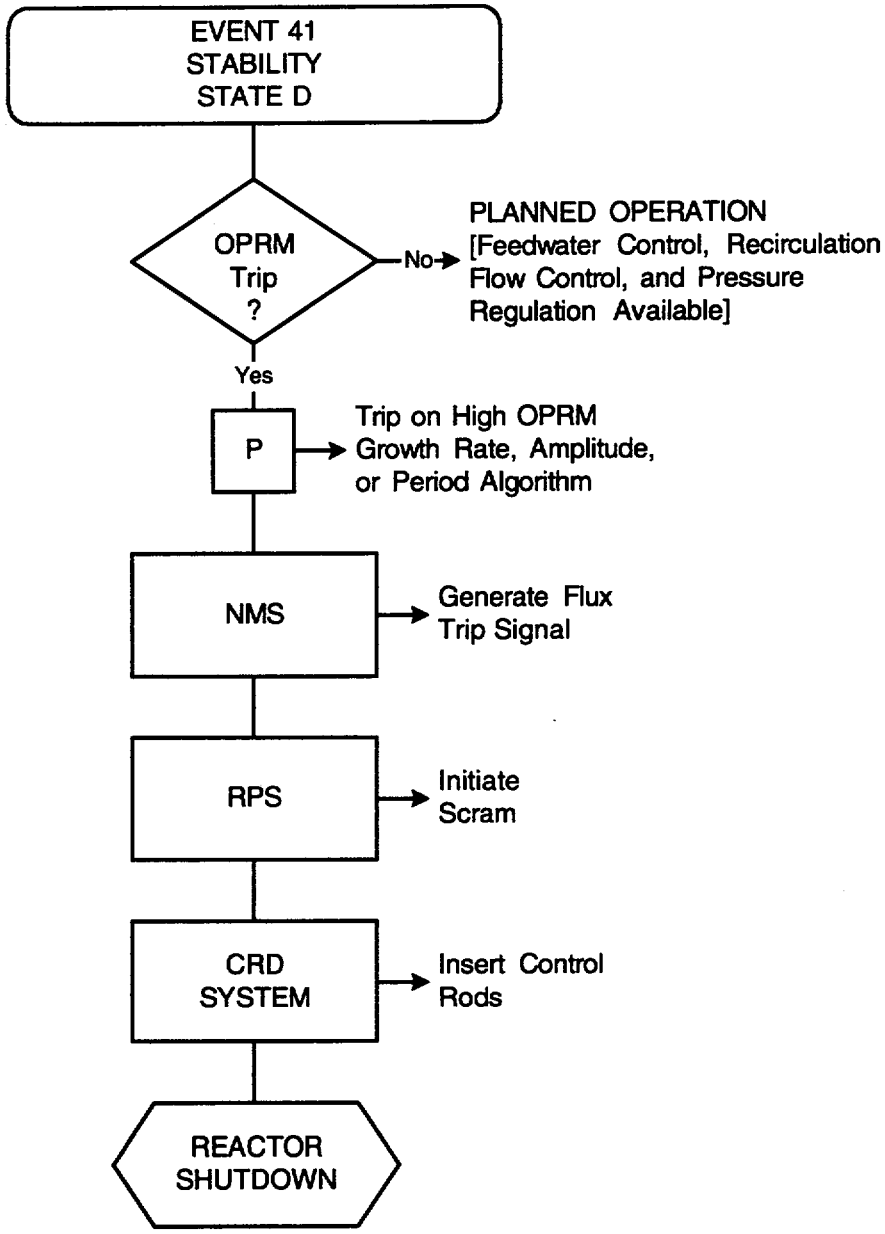

NOTES:

1. RPV isolation is not required for event mitigation.
2. Normal operating systems accomplish core cooling and pressure relief functions.
3. Event is described in 15C.4.3.1.

Figure 15C-36
Event Diagram
Stability

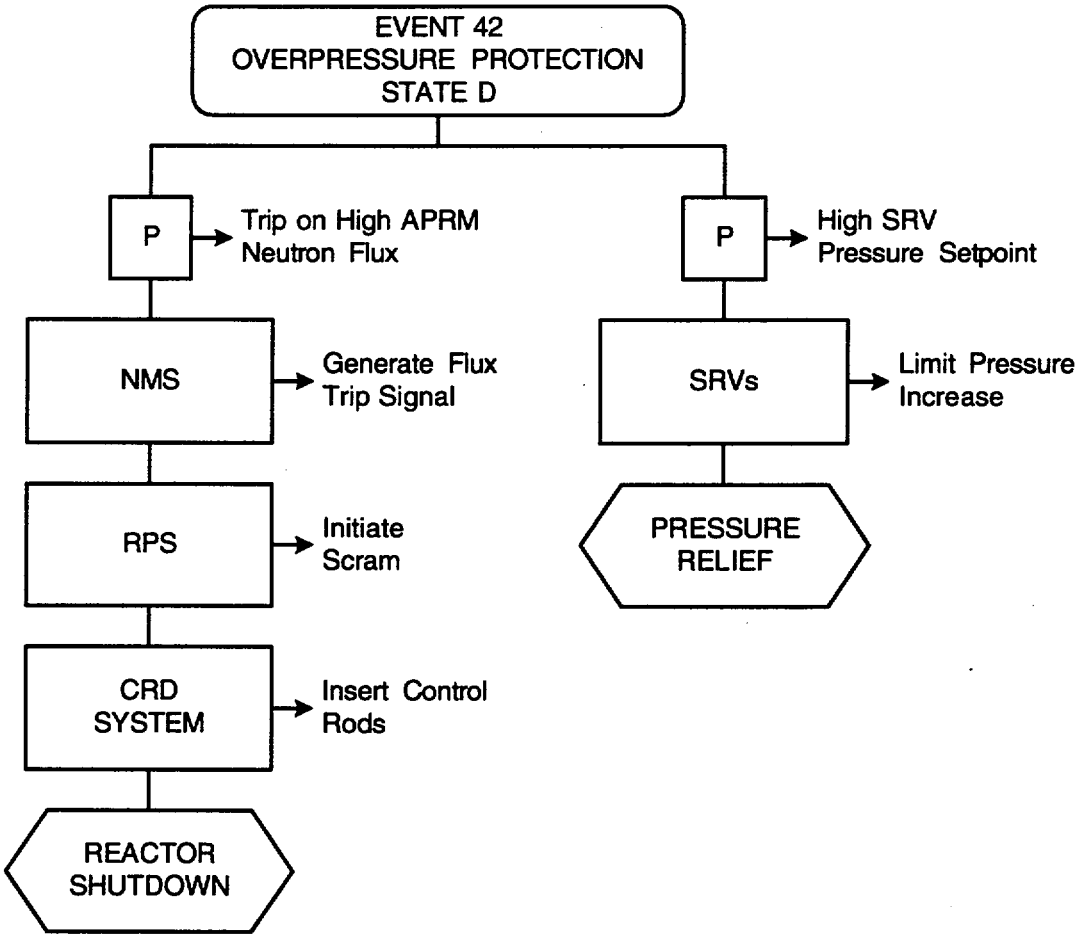

NOTES:

1. Event is closure of all MSIVs with flux scram.
2. Event is described in 15C.4.3.2.

REV 18B 03/00

Figure 15C-37
Event Diagram
Overpressure Protection

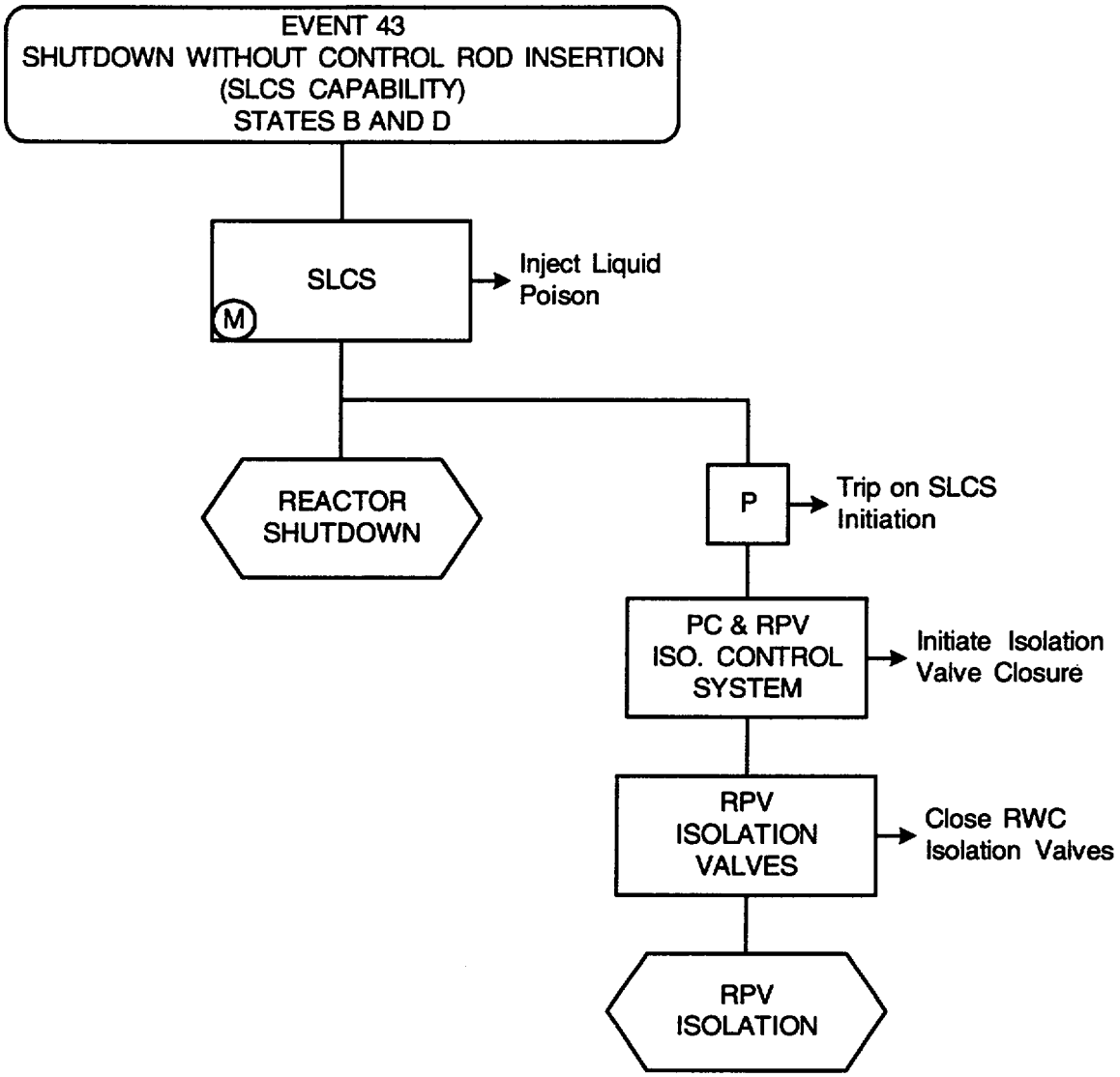

NOTES:

1. Normal operating systems accomplish core cooling and pressure relief functions.
2. Event is described in 15C.4.3.3.

REV 18B 03/00

Figure 15C-38
Event Diagram
Shutdown Without Control Rod Insertion
(SLCS Capability)

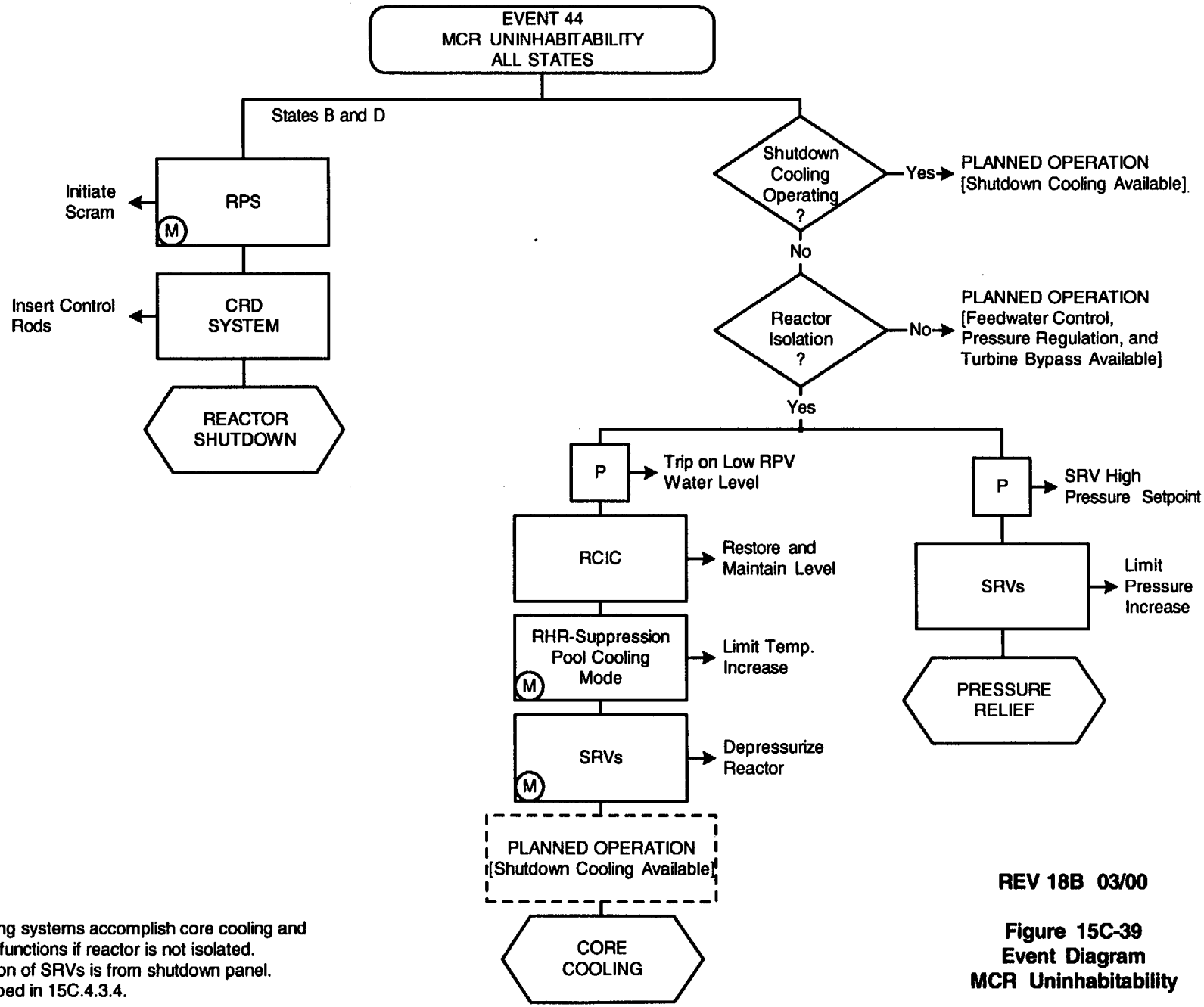

NOTES:

1. Normal operating systems accomplish core cooling and pressure relief functions if reactor is not isolated.
2. Manual operation of SRVs is from shutdown panel.
3. Event is described in 15C.4.3.4.

REV 18B 03/00

Figure 15C-39
Event Diagram
MCR Uninhabitability

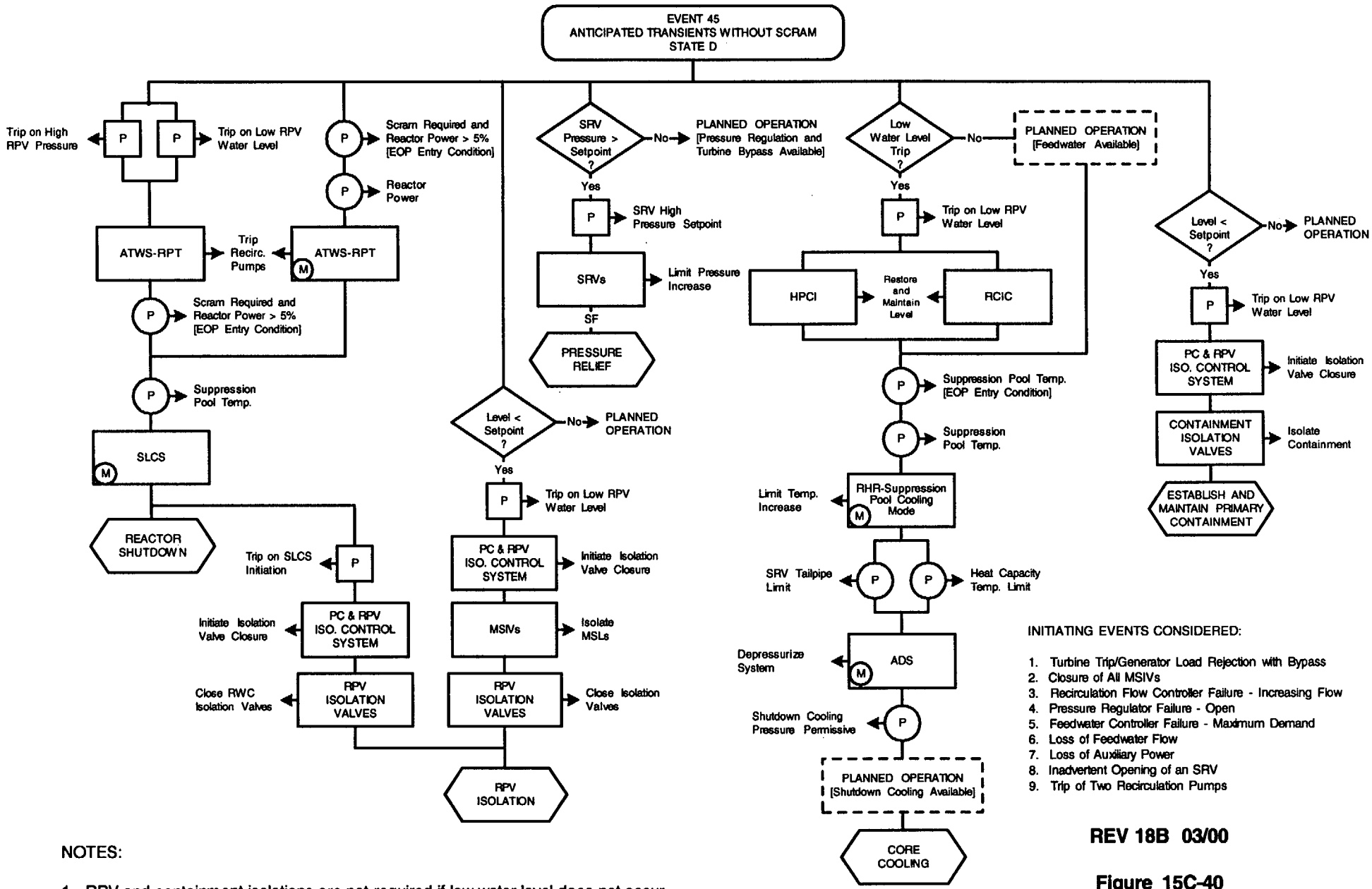

INITIATING EVENTS CONSIDERED:

1. Turbine Trip/Generator Load Rejection with Bypass
2. Closure of All MSIVs
3. Recirculation Flow Controller Failure - Increasing Flow
4. Pressure Regulator Failure - Open
5. Feedwater Controller Failure - Maximum Demand
6. Loss of Feedwater Flow
7. Loss of Auxiliary Power
8. Inadvertent Opening of an SRV
9. Trip of Two Recirculation Pumps

NOTES:

1. RPV and containment isolations are not required if low water level does not occur.
2. Pressure relief is not required if SRV setpoint is not reached.
3. Event is described in 15C.4.3.5.

REV 18B 03/00

Figure 15C-40
Event Diagram
Anticipated Transient Without Scram

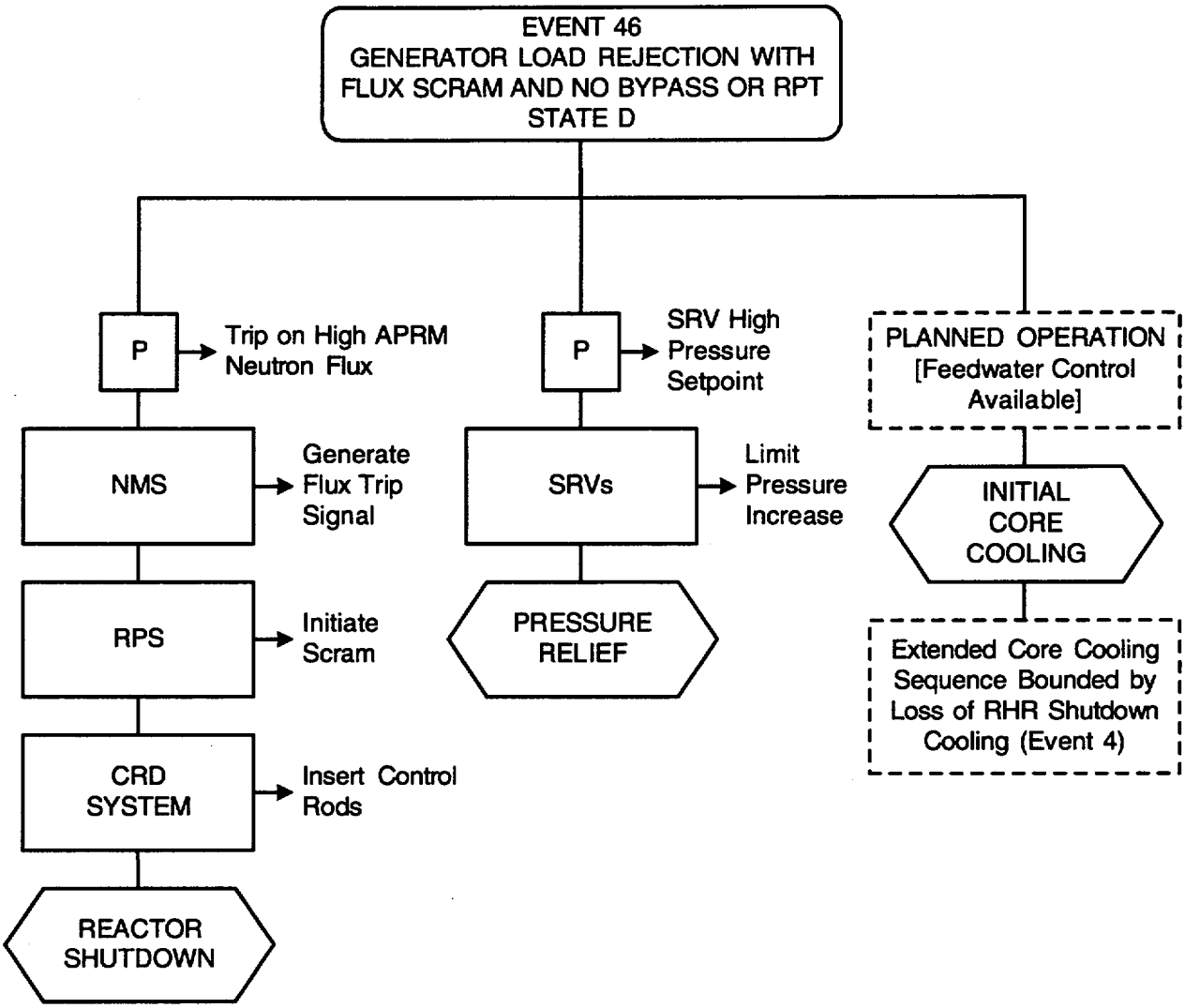

NOTES:

1. Normal operating systems accomplish initial core cooling; feedwater trip may be required due to high suppression pool level.
2. RPV isolation is not required for event mitigation.
3. Event is described in 15C.4.3.6.

REV 18B 03/00

Figure 15C-41
Event Diagram
Generator Load Rejection with Flux Scram and No Bypass or RPT

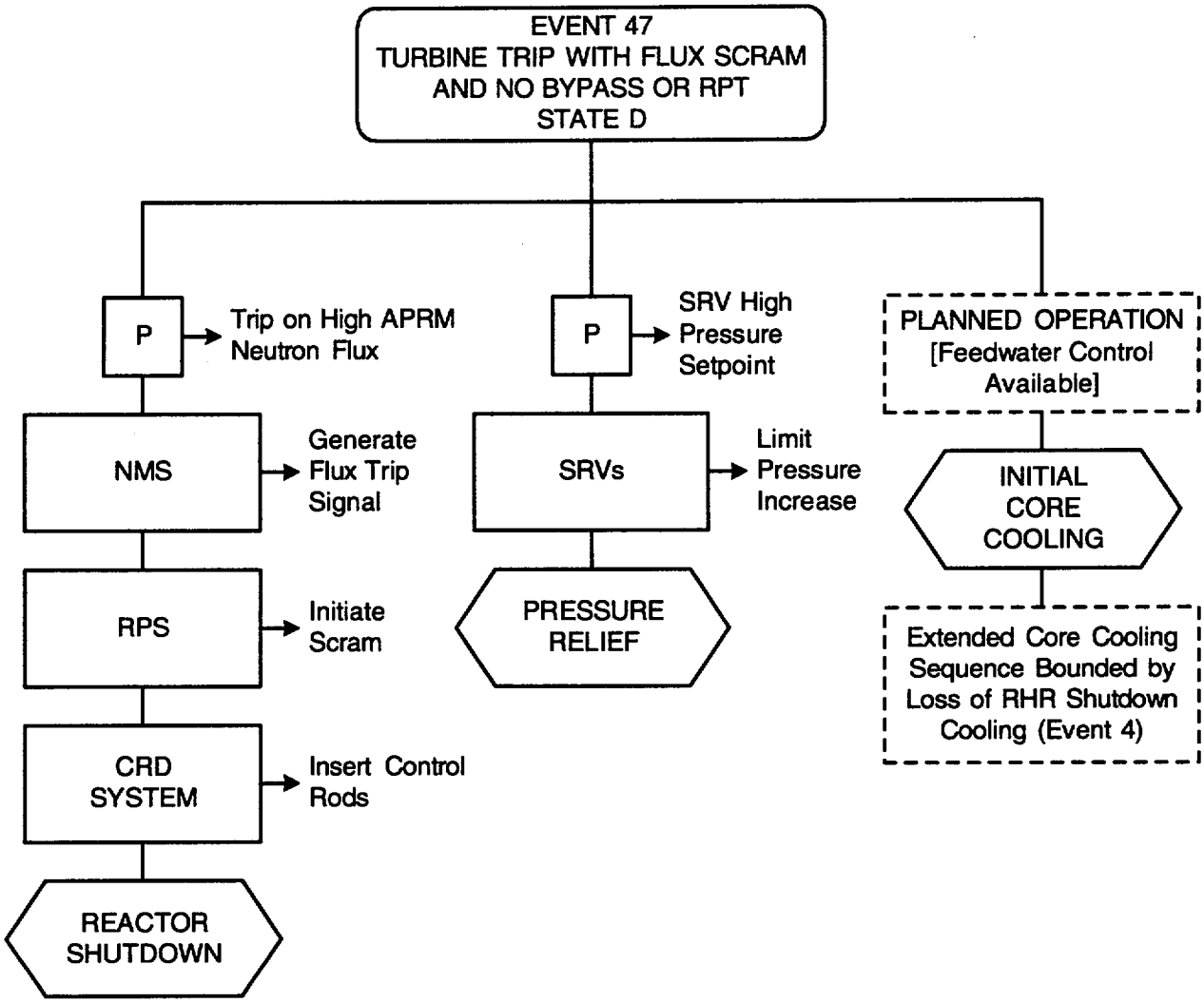

NOTES:

1. Normal operating systems accomplish initial core cooling; feedwater trip may be required due to high suppression pool level.
2. RPV isolation is not required for event mitigation.
3. Event is described for 15C.4.3.7.

Figure 15C-42
Event Diagram
Turbine Trip with Flux Scram and No Bypass or RPT

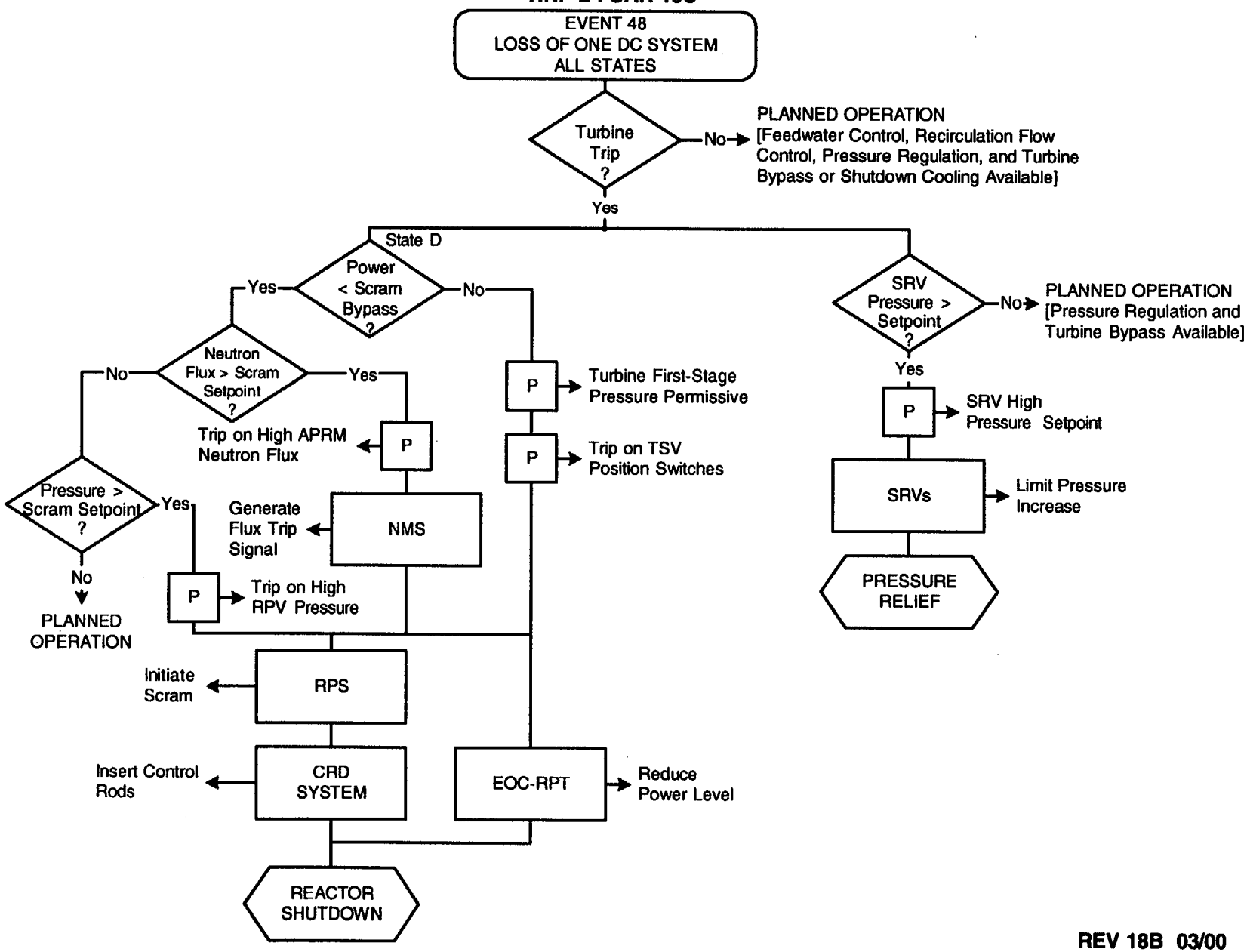

NOTES:

1. Normal operating systems accomplish core cooling function.
2. RPV isolation is not required for event mitigation.
3. Reactor shutdown is not required if scram setpoint is not reached.
4. Pressure relief is not required if SRV setpoint is not reached.
5. Event is described in 15C4.3.8.

Figure 15C-43
Event Diagram
Loss of One dc System

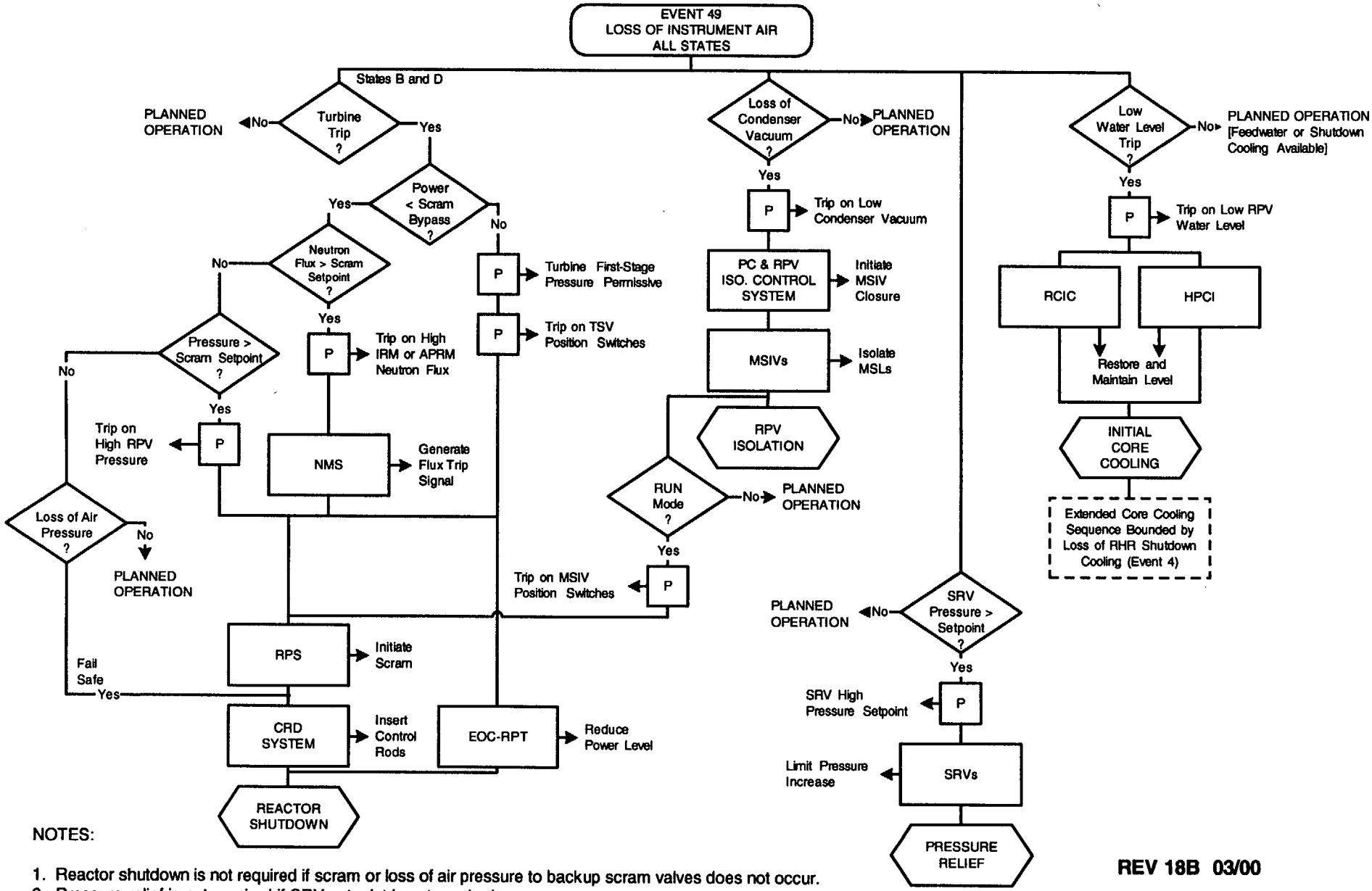

NOTES:

1. Reactor shutdown is not required if scram or loss of air pressure to backup scram valves does not occur.
2. Pressure relief is not required if SRV setpoint is not reached.
3. Scram will occur on MSIV closure in RUN Mode.
4. Turbine trip can occur on either high RPV water level due to feedwater controller failure or loss of condenser vacuum.
5. Event is described in 15C.4.3.9.

REV 18B 03/00

Figure 15C-44
Event Diagram
Loss of Instrument Air

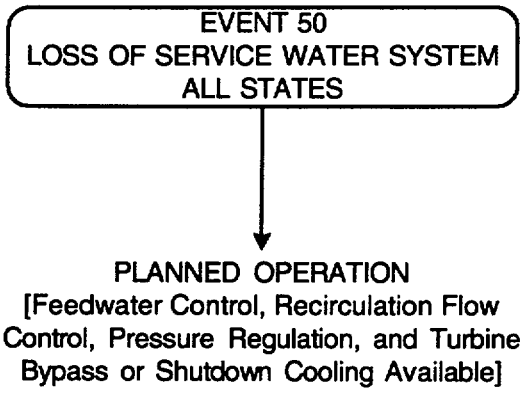

NOTES:

1. Reactor shutdown and RPV isolation are not required for event mitigation.
2. Normal operating systems accomplish core cooling and pressure relief functions.
3. Event is described in 15C.4.3.10.

REV 18B 03/00

Figure 15C-45
Event Diagram
Loss of Service Water System

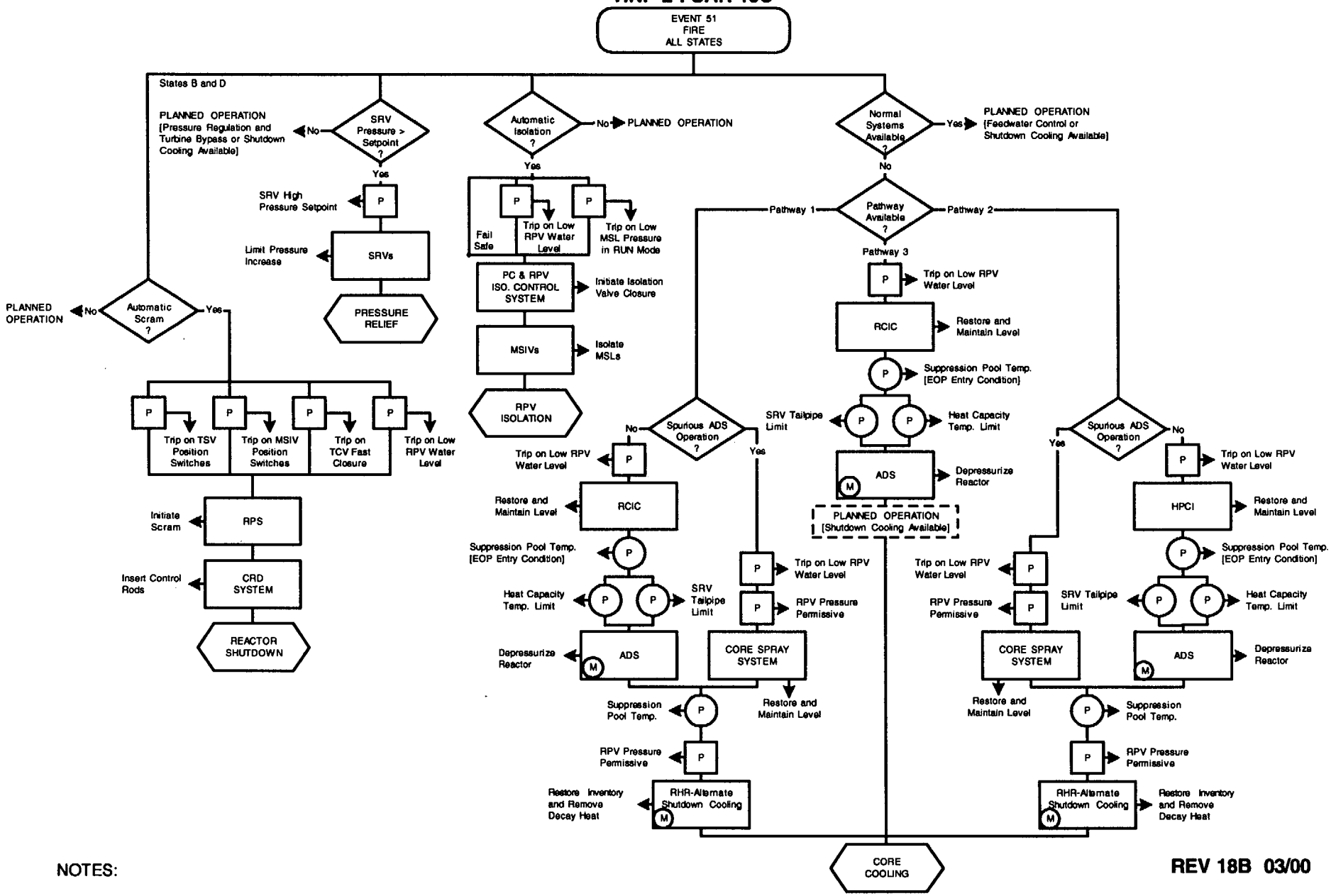

NOTES:

1. Normal operating systems accomplish core cooling and pressure relief functions.
2. Normal operating systems are feedwater or shutdown cooling depending on the operating mode.
3. RPV isolation is not required if not automatically initiated.
4. Event is described in 15C.4.3.11.

REV 18B 03/00

Figure 15C-46
Event Diagram
Fire

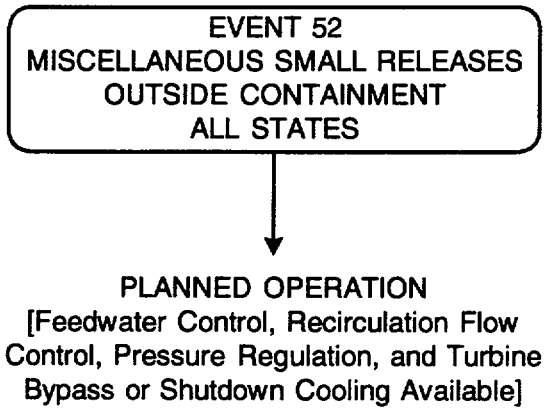

REV 18B 03/00

TES:

1. Reactor shutdown and RPV isolation are not required for event mitigation.
2. Normal operating systems accomplish core cooling and pressure relief functions.
3. Event is described in 15C.4.3.12.

Figure 15C-47
Event Diagram
Miscellaneous Small Releases
Outside Containment

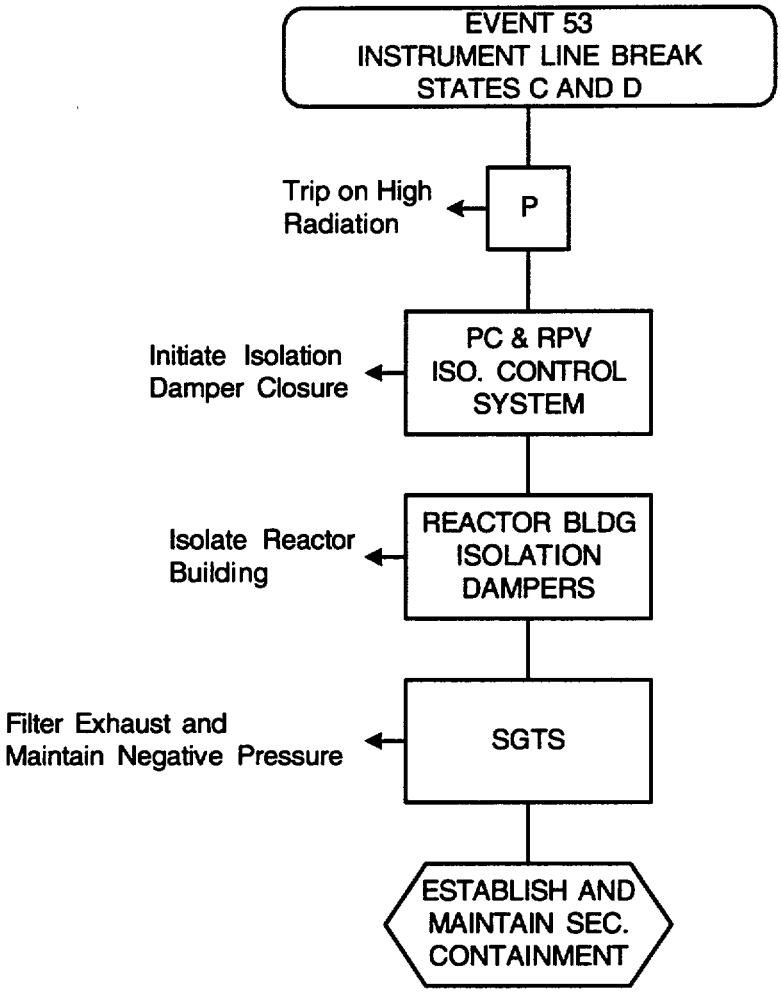

NOTES:

1. Reactor shutdown, RPV isolation, primary containment, and MCR habitability are not required for event mitigation.
2. Normal operating systems accomplish core cooling and pressure relief functions.
3. Event is described in 15C.4.3.13.

REV 18B 03/00

Figure 15C-48
Event Diagram
Instrument Line Break

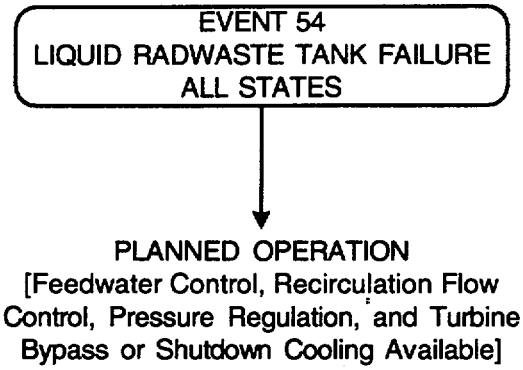

NOTES:

1. Reactor shutdown, RPV isolation, primary containment, secondary containment, and MCR habitability are not required for event mitigation.
2. Normal operating systems accomplish core cooling and pressure relief functions.
3. Event is described in 15C.4.3.14.

REV 18B 03/00

Figure 15C-49
Event Diagram
Liquid Radwaste Tank Failure

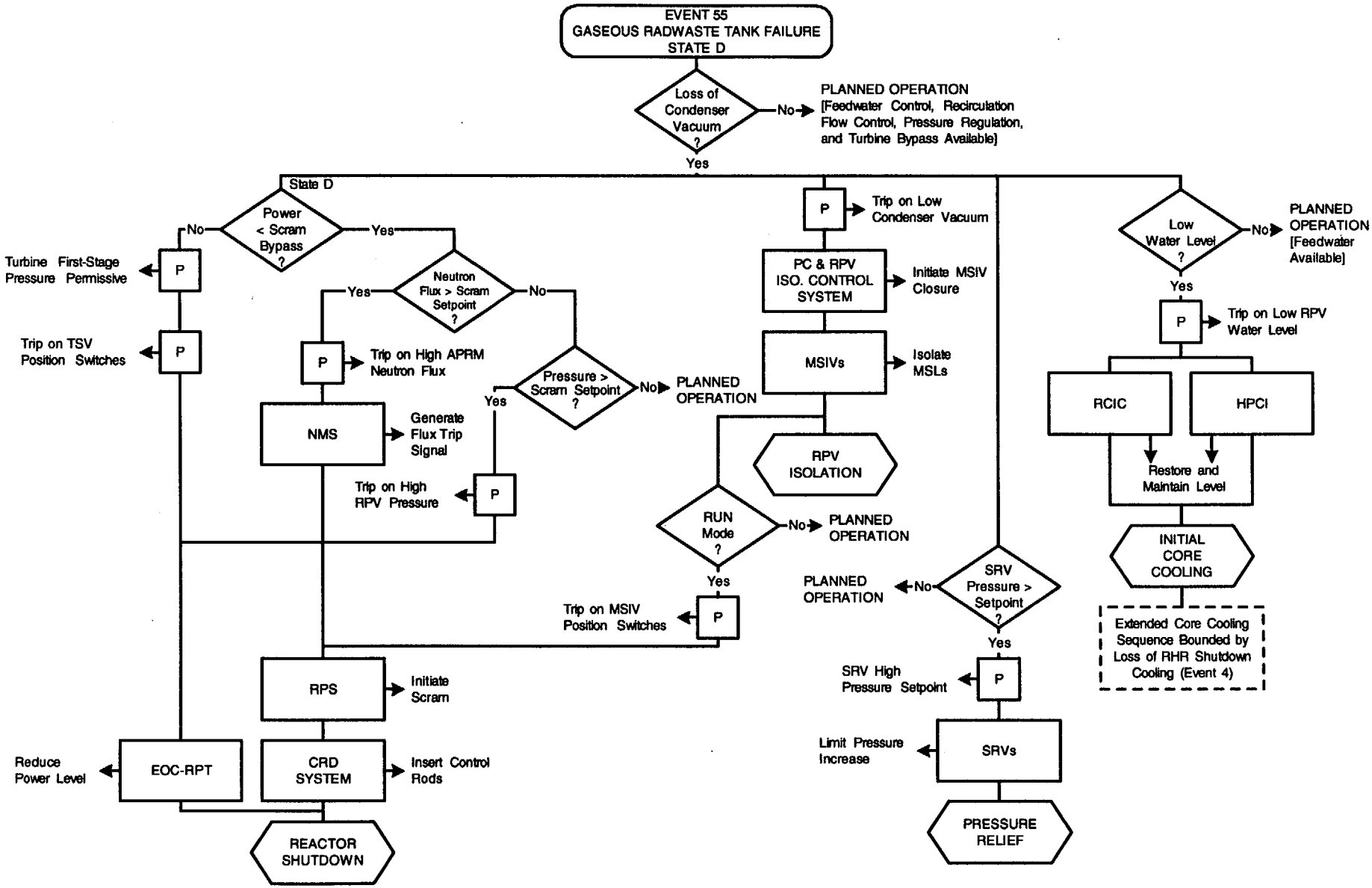

NOTES:

1. Reactor shutdown is not required if RPV pressure permissive to bypass scram is not reached.
2. Pressure relief is not required if SRV setpoint is not reached.
3. RPV isolation is not required if reactor is not in RUN mode.
4. Event is described in 15C.4.3.15.

REV 18B 03/00

Figure 15C-50
Event Diagram
Gaseous Radwaste Tank Failure

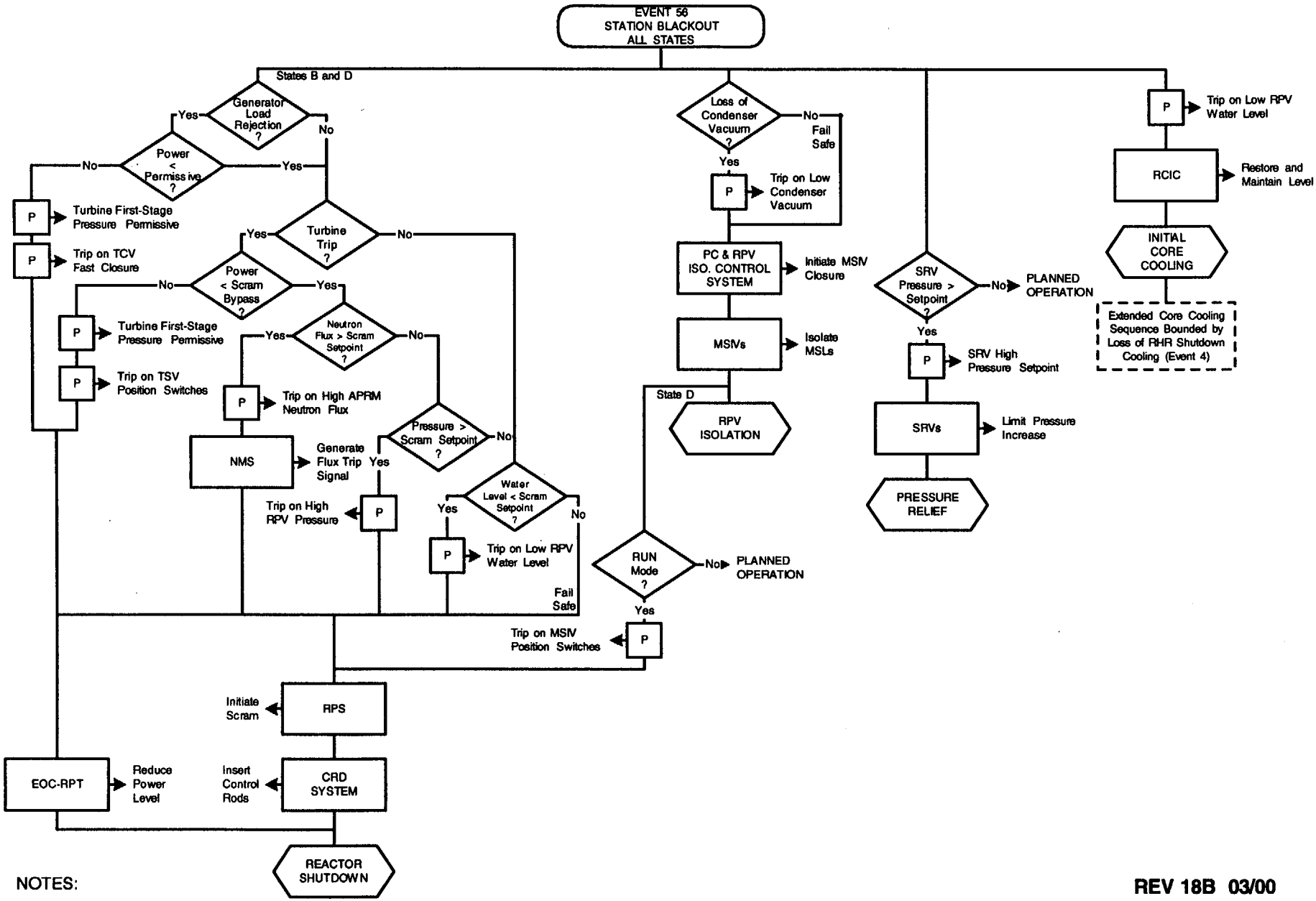

NOTES:

1. RPS M-G set coastdown initiates fail-safe scram or MSIV closure if not previously initiated.
2. Pressure relief is not required if SRV setpoint is not reached.
3. Event 4, Loss of Shutdown Cooling, bounds loss of power when operating in RHR-shutdown cooling mode.
4. Event is described in 15C.4.3.16.

Figure 15C-51
Event Diagram
Station Blackout

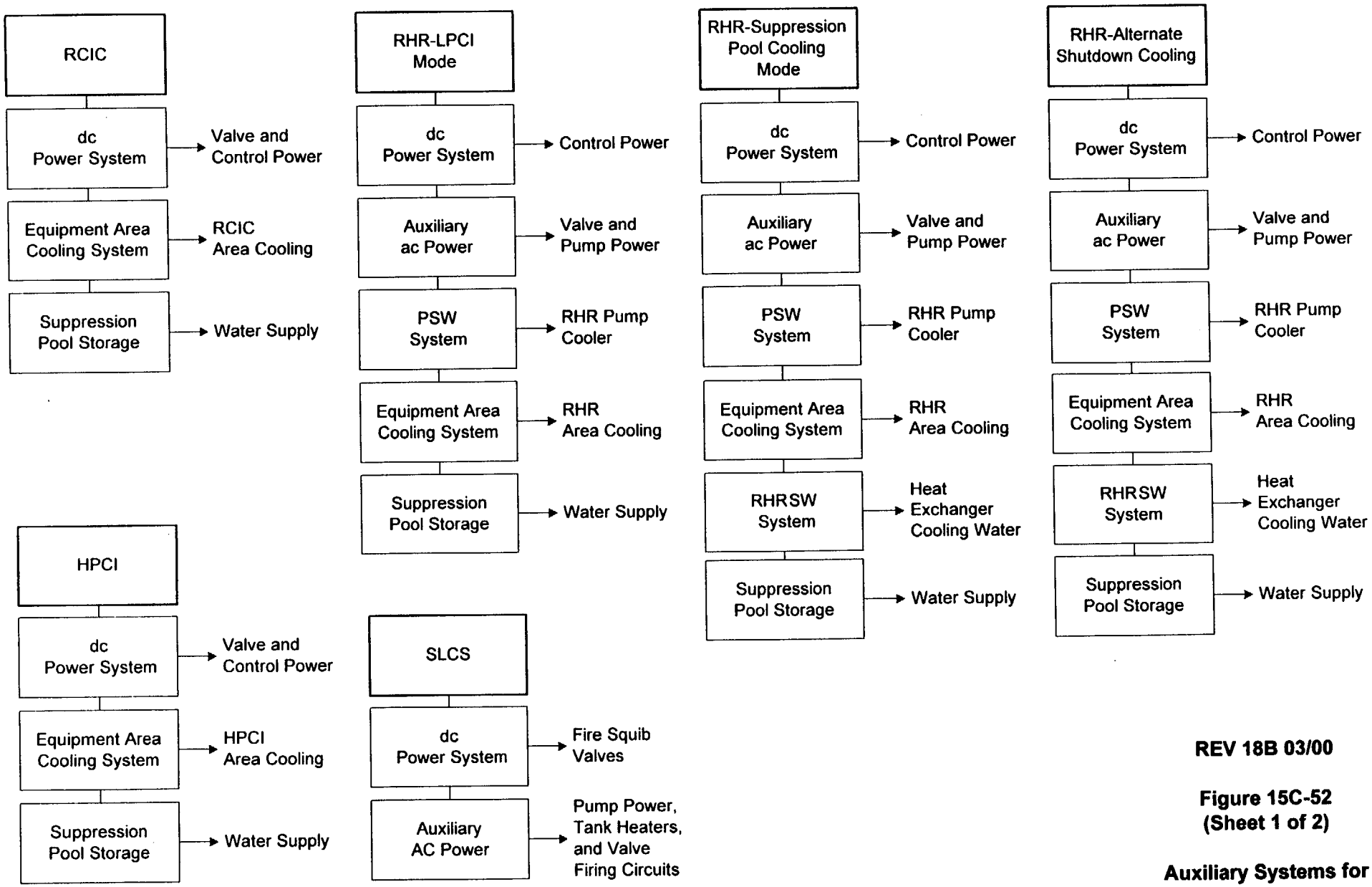

REV 18B 03/00

Figure 15C-52
(Sheet 1 of 2)

Auxiliary Systems for Front-Line Systems

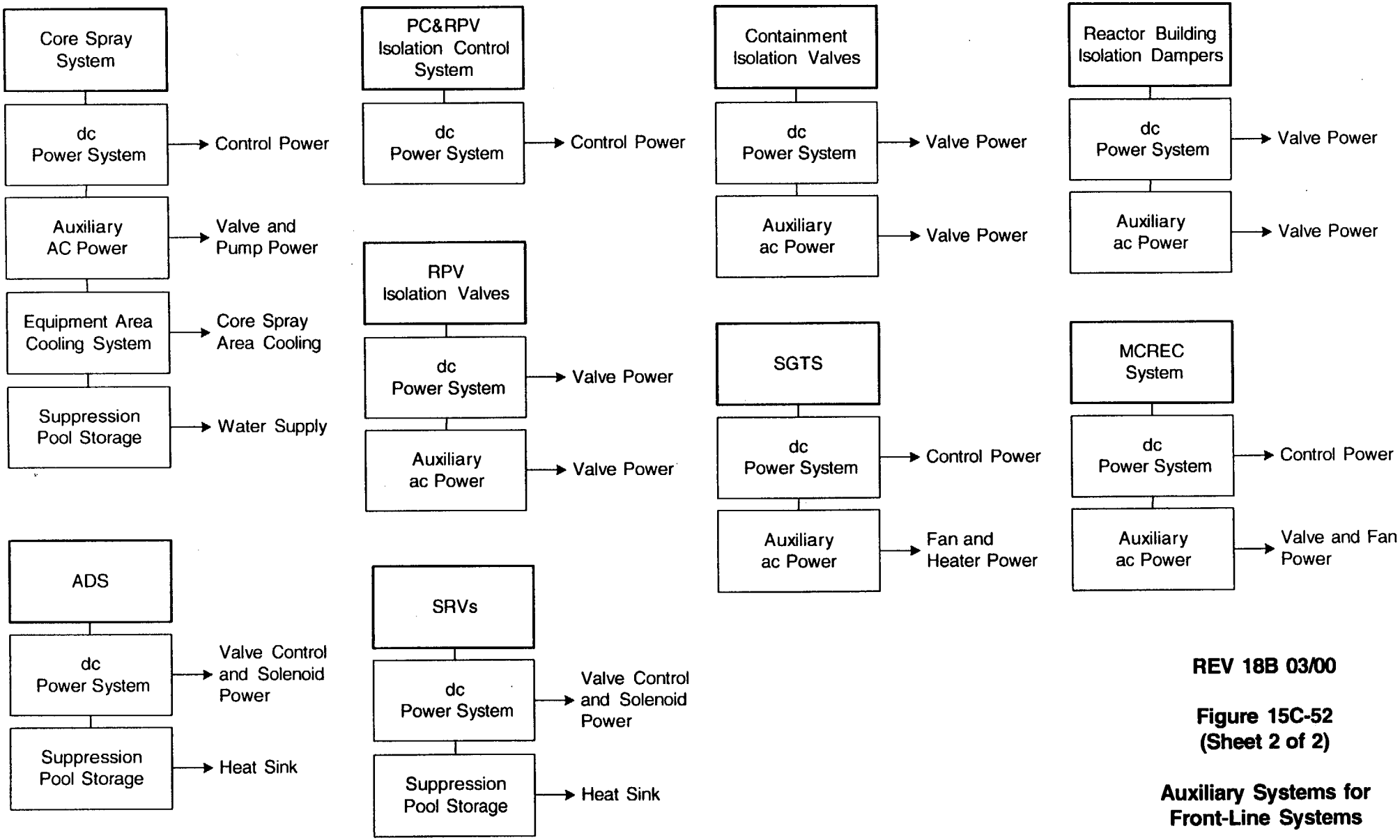

REV 18B 03/00

Figure 15C-52 (Sheet 2 of 2)

Auxiliary Systems for Front-Line Systems

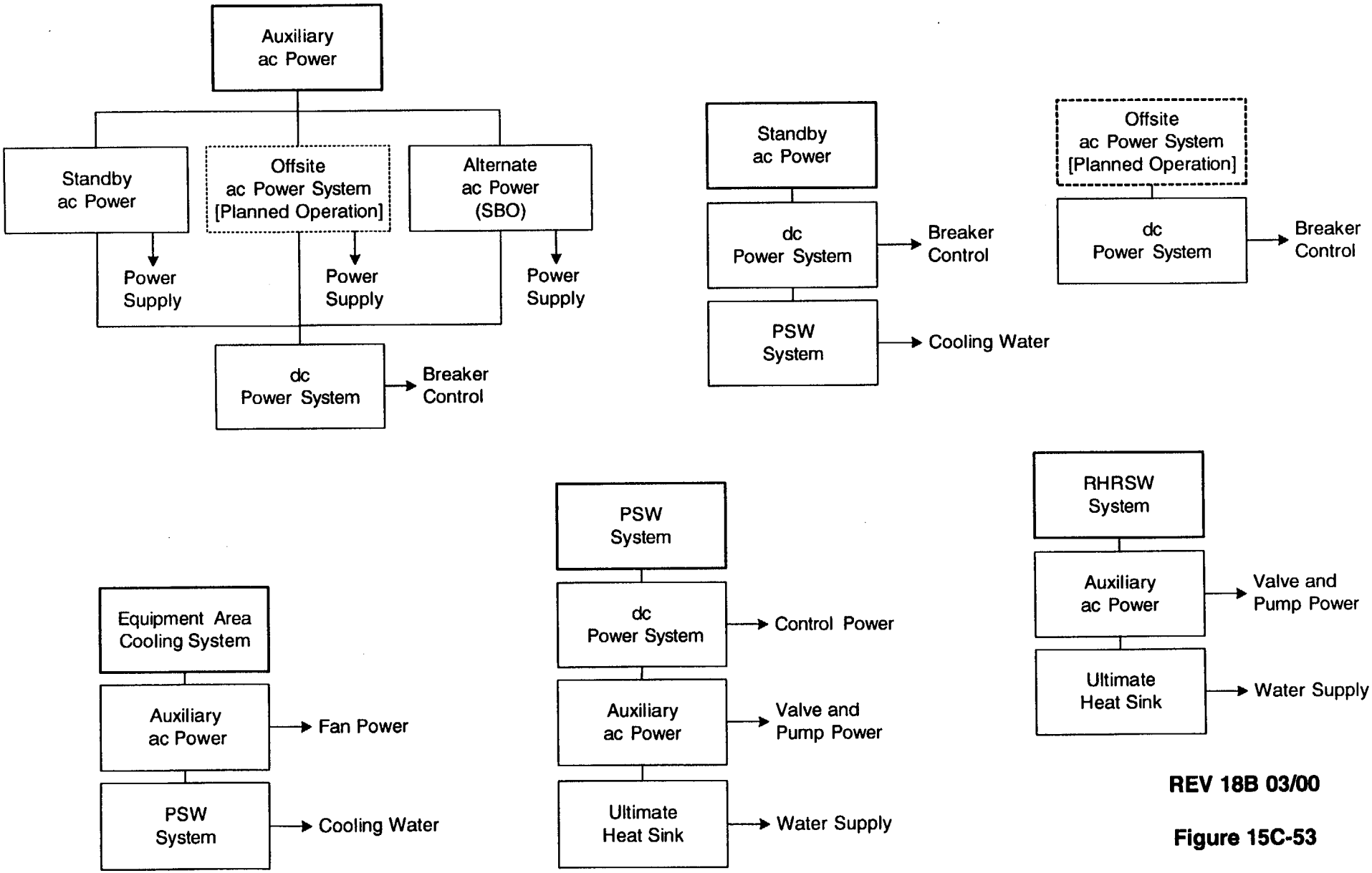

REV 18B 03/00

Figure 15C-53

Auxiliary Systems for Other Auxiliary Systems

SUPPLEMENT 17.2A

QUALITY ASSURANCE OF THE INDEPENDENT SPENT FUEL STORAGE INSTALLATION

This Supplement describes the administrative controls and the quality assurance (QA) program applied to important-to-safety (ITS) structures, systems, and components associated with the Edwin I. Hatch Nuclear Plant (HNP) onsite independent spent fuel storage installation (ISFSI) to assure conformance to regulatory requirements and the design bases. This program is an extension of the OA program described in section 17.2, modified to address 10 CFR 72 Subpart G items specific to ISFSI and related support activities.

The QA program described in section 17.2 is applicable to ISFSI items classified as ITS Category A and ITS Category B. Specific aspects of the QA program are applied to ITS Category C items as specified in the individual subsections.

The following definitions are applicable to the HNP ISFSI QA program:

ITS structures, systems, and components are those features of an ISFSI whose function is to:

- Maintain the conditions required to store spent fuel safely,
- Prevent damage to the spent fuel container during handling and storage, or
- Provide reasonable assurance that spent fuel can be received, handled, packaged, stored, and retrieved without undue risk to the health and safety of the public.

The definition of ITS safety categories below are taken from NUREG/CR-6407, "Classification of Transportation Packaging and Dry Spent Fuel Storage System Components According to Importance to Safety."

1. Category A - ITS Category A items include structures, components, and systems whose failure could directly result in a condition adversely affecting public health and safety. The failure of a single item could cause loss of primary containment leading to release of radioactive material, loss of shielding, or unsafe geometry compromising criticality control.

2. Category B - ITS Category B items include structures, components, and systems whose failure or malfunction could indirectly result in a condition adversely affecting public health and safety. The failure of a Category B item, in conjunction with the failure of an additional item, could result in an unsafe condition.

3. Category C - ITS Category C items include structures, components, and systems whose failure or malfunction would not significantly reduce the packaging effectiveness and would not be likely to create a situation adversely affecting public health and safety.

The QA program, as described in the following identified FSAR subsections, is applied to ITS Category A, B, and C items, unless modified by the description below:

- 17.2.1 Organization

  The corporate organization established to support operation of the HNP also functions to support operation of the HNP ISFSI.

  Additional offsite support is provided by the cask vendor.

  Those HNP organizations with responsibilities related to 10 CFR 50.59 safety evaluation reviews also perform the corresponding ISFSI safety evaluation reviews under 10 CFR 72.48.

- 17.2.2 QA Program

  QA program requirements are applied to the ISFSI and support structures, systems, and components using a graded approach based on the ISFSI item classification. ITS Category A, B, and C items are identified in table 17.2A-1. Items identified as not important to safety in table 17.2A-1 are excluded from the QA program.

  The HNP organization has the same responsibilities as described in subsection 17.2.2 for ITS Category A and Category B items.

- 17.2.3 Design Change Control

  Design control measures for ITS Category A and Category B items are applied where appropriate per the controls in subsection 17.2.3. Additional review concerns that are specific to the ISFSI are criticality physics, shielding, and features to facilitate decontamination.

Replace existing FHA Figure H-11850 with the attached Figure H-11850 Revision 15A.

H-11850

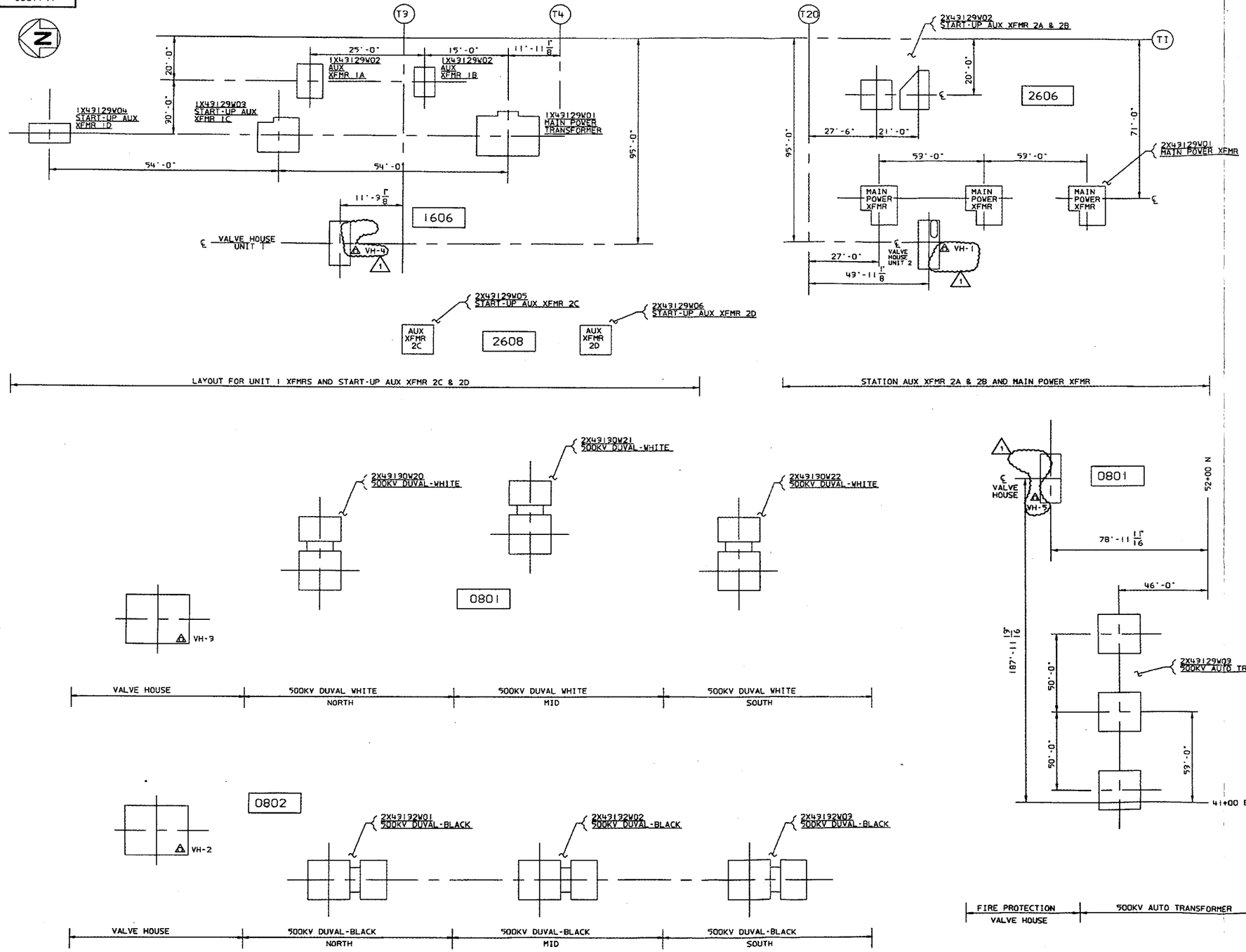

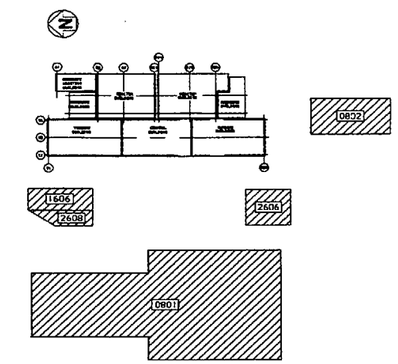

KEY PLAN

NOTES:

1. SEE DRAWING H-11802 FOR FIRE AREA BOUNDARIES AND GENERAL NOTES.
2. FOR LEGEND SEE DWG. H-11801.

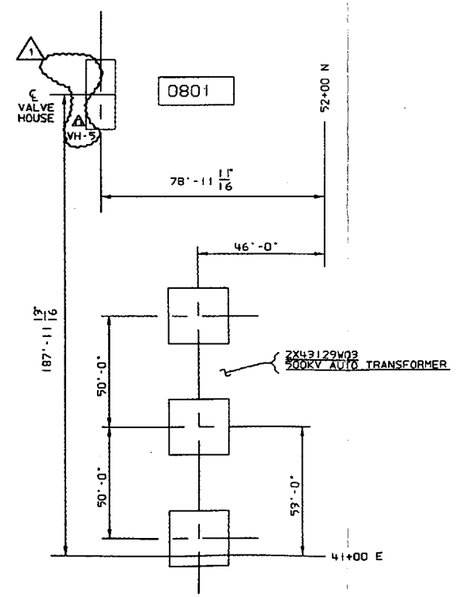

FHA DOCUMENT

ACAD14 H1185001

Revision: 1	Date: 9-30-99
REVISED PER ABN 99-0374.	

BY	CHKD	APPR.1	
ARK	CMM	JCV	SEE MICROFILM FOR PREVIOUS REV. SIGNATURES.

SOUTHERN COMPANY

"This document contains proprietary, confidential, and/or trade secret information of the subsidiaries of Southern Company or of third parties. It is intended for use only by employees of, or authorized contractors of, the subsidiaries of Southern Company. Unauthorized possession, use, distribution, copying, dissemination, or disclosure of any portion hereof is prohibited."

EDWIN I. HATCH NUCLEAR PLANT UNIT No. 1 & 2
FIRE HAZARDS ANALYSIS
TRANSFORMER SWITCH YARD

DRAWN	DESIGNED	LOCATION	DRAWING NUMBER	REVISION
JRC	CMM	10-502	H-11850	1
DATE	SCALE			
12-14-89	N.T.S.			

REV 15A 01/00