EPA Form 3510-2C

Please print or type in the unshaded areas only.

EPA I.D. NUMBER *(copy from Item 1 of Form 1)*
VAD065376279

Form Approved
OMB No. 2040-0086
Approval expires 5-31-92

North Anna

FORM 2C NPDES

EPA

U.S. ENVIRONMENTAL PROTECTION AGENCY
APPLICATION FOR PERMIT TO DISCHARGE WASTEWATER
EXISTING MANUFACTURING, COMMERCIAL, MINING AND SILVICULTURAL OPERATIONS
Consolidated Permits Program

I. OUTFALL LOCATION

For each outfall, list the latitude and longitude of its location to the nearest 15 seconds and the name of the receiving water.

A. OUTFALL NUMBER *(list)*	B. LATITUDE 1. DEG.	2. MIN.	3. SEC.	C. LONGITUDE 1. DEG.	2. MIN.	3. SEC.	D. RECEIVING WATER *(name)*
103	38	03	47	77	47	56	DISCHARGE CANAL
104	38	03	47	77	47	56	DISCHARGE CANAL
105	38	03	47	77	47	56	DISCHARGE CANAL
107	38	03	47	77	47	56	DISCHARGE CANAL
108	38	03	47	77	47	56	DISCHARGE CANAL

II. FLOWS, SOURCES OF POLLUTION, AND TREATMENT TECHNOLOGIES

A. Attach a line drawing showing the water flow through the facility. Indicate sources of intake water, operations contributing wastewater to the effluent, and treatment units labeled to correspond to the more detailed descriptions in Item B. Construct a water balance on the line drawing by showing average flows between intakes, operations, treatment units, and outfalls. If a water balance cannot be determined *(e.g., for certain mining activities)*, provide a pictorial description of the nature and amount of any sources of water and any collection or treatment measures.

B. For each outfall, provide a description of: (1) All operations contributing wastewater to the effluent, including process wastewater, sanitary wastewater, cooling water, and storm water runoff; (2) The average flow contributed by each operation; and (3) The treatment received by the wastewater. Continue on additional sheets if necessary.

AVERAGE FLOW DATA FOR 1999, UNLESS OTHERWISE NOTED.

1. OUTFALLING *(list)*	2. OPERATION(S) CONTRIBUTING FLOW a. OPERATION *(list)* * New contributing flows	b. AVERAGE FLOW *(include units)*	3. TREATMENT a. DESCRIPTION	b. LIST CODES FROM TABLE 2C-1	
	Process Waste Clarifier	0.259 mgd	Ion Exchange, Discharge to discharge canal.	2-J	1-O
	Steam Generator Blowdown,	0.52 mgd (proposed)			
	Package Boiler Blowdown,				
103	Mat Sump System, Service Water				
	Reservoir, Ion Exchange Waste				
	*Service Water System Blowdown (continuous)				
	Oil/Water Separator	0.264 mgd	Flotation	1-H	
	Storm Water, Turbine Building Sumps,		Discharge to discharge canal.	1-O	
	Service Water Reservoir Line Drains				
104					
	Bearing Cooling Tower Blowdown	0.09 mgd	Discharge to discharge canal.	1-O	
	*Continuous Blowdown	0.30 mgd (proposed)			
	*Lake to Lake Operation for BCS (intermittent)	17.3 mgd (proposed)			
105					
	Bearing Cooling System Discharge	0 mgd	Discharge to discharge canal.	1-O	
	*Lake to Lake Operation for BCS (intermittent)	17.3 mgd (proposed)			
	*Continuous Blowdown	0.30 mgd (proposed)			
107	Strainer Blowdown	unknown (insignificant)			
	Service Water Overboard	0.025 mgd	Discharge to discharge canal	1-O	
	Overflow *Batch Blowdown (intermittent)	unknown quantity 13 mgd (proposed)			
	*Straight-through cooling water (intermit.)	14.1 mgd (proposed)	emergency only		
108	Header maintenance	0.15 mgd			

OFFICIAL USE ONLY *(effluent guidelines sub-categories)*

CONTINUE ON REVERSE

STF ENV441F.1

Please print or type in the unshaded areas only.

EPA I.D. NUMBER *(copy from Item 1 of Form 1)*
VAD065376279

Form Approved
OMB No. 2040-0086
Approval expires 5-31-92

North Anna

FORM 2C NPDES

EPA

U.S. ENVIRONMENTAL PROTECTION AGENCY
APPLICATION FOR PERMIT TO DISCHARGE WASTEWATER
EXISTING MANUFACTURING, COMMERCIAL, MINING AND SILVICULTURAL OPERATIONS
Consolidated Permits Program

I. OUTFALL LOCATION

For each outfall, list the latitude and longitude of its location to the nearest 15 seconds and the name of the receiving water.

A. OUTFALL NUMBER *(list)*	B. LATITUDE			C. LONGITUDE			D. RECEIVING WATER *(name)*
	1. DEG.	2. MIN.	3. SEC.	1. DEG.	2. MIN.	3. SEC.	
109	38	03	47	77	47	56	DISCHARGE CANAL
110	38	03	47	77	47	56	DISCHARGE CANAL
111	38	03	47	77	47	56	DISCHARGE CANAL
112	38	03	47	77	47	56	DISCHARGE CANAL
113	38	03	47	77	47	56	DISCHARGE CANAL
114 (New)	38	03	47	77	47	56	DISCHARGE CANAL

II. FLOWS, SOURCES OF POLLUTION, AND TREATMENT TECHNOLOGIES

A. Attach a line drawing showing the water flow through the facility. Indicate sources of intake water, operations contributing wastewater to the effluent, and treatment units labeled to correspond to the more detailed descriptions in Item B. Construct a water balance on the line drawing by showing average flows between intakes, operations, treatment units, and outfalls. If a water balance cannot be determined *(e.g., for certain mining activities)*, provide a pictorial description of the nature and amount of any sources of water and any collection or treatment measures.

B. For each outfall, provide a description of: (1) All operations contributing wastewater to the effluent, including process wastewater, sanitary wastewater, cooling water, and storm water runoff; (2) The average flow contributed by each operation; and (3) The treatment received by the wastewater. Continue on additional sheets if necessary.

1. OUTFALLING *(list)*	2. OPERATION(S) CONTRIBUTING FLOW		3. TREATMENT		
	a. OPERATION *(list)*	b. AVERAGE FLOW *(include units)*	a. DESCRIPTION	b. LIST CODES FROM TABLE 2C-1	
109	Hot Well Drain - Unit 1	0.032 MGD	Discharge to discharge canal.	1-O	
	Secondary System Condensate	Intermittent.			
110	Hot Well Drain - Unit 2	0.032 MGD	Discharge to discharge canal.	1-O	
	Secondary System Condensate	Intermittent			
111	Main Sewage Treatment Plant	0.009 mgd	Activated sludge, Disinfection	1-T	1-L
	30,000 gpd Design.	See Form 2E	Discharge to discharge canal.	3-A	5-A
				2-F	1-O
112	Steam Generator Blowdown - Unit 1	0.206 MGD	Discharge to discharge canal.	1-O	
113	Steam Generator Blowdown - Unit 2	0.194 MGD	Discharge to discharge canal.	1-O	
114	Service Water Tie-In Vault Drain	0.01 MGD	Discharge to discharge canal.	1-O	
		(proposed)			
		(intermittent)			

OFFICIAL USE ONLY *(effluent guidelines sub-categories)*

CONTINUE ON REVERSE

STF ENV441F.1

Please print or type in the unshaded areas only.

EPA I.D. NUMBER *(copy from Item 1 of Form 1)* VAD065376279

Form Approved
OMB No. 2040-0086
Approval expires 5-31-92

North Anna

FORM 2C NPDES

EPA

U.S. ENVIRONMENTAL PROTECTION AGENCY

APPLICATION FOR PERMIT TO DISCHARGE WASTEWATER
EXISTING MANUFACTURING, COMMERCIAL, MINING AND SILVICULTURAL OPERATIONS

Consolidated Permits Program

I. OUTFALL LOCATION

For each outfall, list the latitude and longitude of its location to the nearest 15 seconds and the name of the receiving water.

A. OUTFALL NUMBER *(list)*	B. LATITUDE			C. LONGITUDE			D. RECEIVING WATER *(name)*
	1. DEG.	2. MIN.	3. SEC.	1. DEG.	2. MIN.	3. SEC.	
115 (new)	38	03	47	77	47	56	DISCHARGE CANAL
001	38	03	47	77	47	56	LAKE ANNA
009	38	03	47	77	47	56	LAKE ANNA
013	38	03	47	77	47	56	LAKE ANNA
014	38	03	47	77	47	56	LAKE ANNA

II. FLOWS, SOURCES OF POLLUTION, AND TREATMENT TECHNOLOGIES

A. Attach a line drawing showing the water flow through the facility. Indicate sources of intake water, operations contributing wastewater to the effluent, and treatment units labeled to correspond to the more detailed descriptions in Item B. Construct a water balance on the line drawing by showing average flows between intakes, operations, treatment units, and outfalls. If a water balance cannot be determined *(e.g., for certain mining activities)*, provide a pictorial description of the nature and amount of any sources of water and any collection or treatment measures.

B. For each outfall, provide a description of: (1) All operations contributing wastewater to the effluent, including process wastewater, sanitary wastewater, cooling water, and storm water runoff; (2) The average flow contributed by each operation; and (3) The treatment received by the wastewater. Continue on additional sheets if necessary.

1. OUTFALLING *(list)*	2. OPERATION(S) CONTRIBUTING FLOW		3. TREATMENT		
	a. OPERATION *(list)*	b. AVERAGE FLOW *(include units)*	a. DESCRIPTION	b. LIST CODES FROM TABLE 2C-1	
115	Service Water System Blowdown	13 MGD	Discharge to discharge canal.	1-O	
	Continuous Blowdown	0.72 mgd			
		(Estimated Future)			
001	Discharge of Condenser Cooling	2160 MGD	Discharge to Lake Anna	4-A	
	Water from WHTF at Dike 3				
009	Settling Pond	0.198 MGD	Discharge to Lake Anna	4-A	
	Ground Water, Storm Water and	Intermittent			
	Backwash from Sand Filters and	0.204 mgd (proposed)			
	Reverse Osmosis Units				
	Ionics Emergency shower wash after				
	neutralization in holding tank				
013	Turbine Building Sump #1	0.0 MGD	Discharge to Lake Anna	4-A	
	Stormwater - emergency only				
014	Turbine Building Sump #2 and	0.0 MGD	Discharge to Lake Anna	4-A	
	Storm Water - emergency only.				

OFFICIAL USE ONLY *(effluent guidelines sub-categories)*

CONTINUE ON REVERSE

STF ENV441F.1

Please print or type in the unshaded areas only.

EPA I.D. NUMBER *(copy from Item 1 of Form 1)*
VAD065376279

Form Approved
OMB No. 2040-0086
Approval expires 5-31-92

North Anna

FORM 2C NPDES

EPA

U.S. ENVIRONMENTAL PROTECTION AGENCY
APPLICATION FOR PERMIT TO DISCHARGE WASTEWATER
EXISTING MANUFACTURING, COMMERCIAL, MINING AND SILVICULTURAL OPERATIONS
Consolidated Permits Program

I. OUTFALL LOCATION

For each outfall, list the latitude and longitude of its location to the nearest 15 seconds and the name of the receiving water.

A. OUTFALL NUMBER *(list)*	B. LATITUDE			C. LONGITUDE			D. RECEIVING WATER *(name)*
	1. DEG.	2. MIN.	3. SEC.	1. DEG.	2. MIN.	3. SEC.	
016	38	03	47	77	47	56	LAKE ANNA
019	38	03	47	77	47	56	LAKE ANNA
020	38	03	47	77	47	56	LAKE ANNA
021	38	03	47	77	47	56	LAKE ANNA
022	38	03	47	77	47	56	LAKE ANNA
023	38	03	47	77	47	56	LAKE ANNA

II. FLOWS, SOURCES OF POLLUTION, AND TREATMENT TECHNOLOGIES

A. Attach a line drawing showing the water flow through the facility. Indicate sources of intake water, operations contributing wastewater to the effluent, and treatment units labeled to correspond to the more detailed descriptions in Item B. Construct a water balance on the line drawing by showing average flows between intakes, operations, treatment units, and outfalls. If a water balance cannot be determined *(e.g., for certain mining activities)*, provide a pictorial description of the nature and amount of any sources of water and any collection or treatment measures.

B. For each outfall, provide a description of: (1) All operations contributing wastewater to the effluent, including process wastewater, sanitary wastewater, cooling water, and storm water runoff; (2) The average flow contributed by each operation; and (3) The treatment received by the wastewater. Continue on additional sheets if necessary.

1. OUTFALLING *(list)*	2. OPERATION(S) CONTRIBUTING FLOW		3. TREATMENT		
	a. OPERATION *(list)*	b. AVERAGE FLOW *(include units)*	a. DESCRIPTION	b. LIST CODES FROM TABLE 2C-1	
016	Intake Screen Wash Water	0.14 mgd	Discharge to Lake Anna	4-A	
019	Domestic Water Overflow	0.0 mgd	Discharge to Lake Anna	4-A	
	(samples were collected, requested	Intermittent			
	this outfall be deleted from permit)				
020	Reverse Osmosis Reject	0.32 mgd	Discharge to Lake Anna	4-A	
021	Reverse Osmosis Drain Line	0 mgd	Discharge to Lake Anna	4-A	
		Intermittent			
		(has never discharged)			
022	Drainage Area #2A	See Form 2F	Discharge to Lake Anna	4-A	
	(storm water only)				
023	Drainage Area #2B	See Form 2F	Discharge to Lake Anna	4-A	
	(storm water only)				

OFFICIAL USE ONLY *(effluent guidelines sub-categories)*

CONTINUE ON REVERSE

STF ENV441F.1

Please print or type in the unshaded areas only.

EPA I.D. NUMBER *(copy from Item 1 of Form 1)*
VAD065376279

Form Approved
OMB No. 2040-0086
Approval expires 5-31-92

North Anna

FORM 2C NPDES

EPA

U.S. ENVIRONMENTAL PROTECTION AGENCY

APPLICATION FOR PERMIT TO DISCHARGE WASTEWATER
EXISTING MANUFACTURING, COMMERCIAL, MINING AND SILVICULTURAL OPERATIONS

Consolidated Permits Program

I. OUTFALL LOCATION

For each outfall, list the latitude and longitude of its location to the nearest 15 seconds and the name of the receiving water.

A. OUTFALL NUMBER *(list)*	B. LATITUDE			C. LONGITUDE			D. RECEIVING WATER *(name)*
	1. DEG.	2. MIN.	3. SEC.	1. DEG.	2. MIN.	3. SEC.	
024	38	03	47	77	47	56	LAKE ANNA
025	38	03	47	77	47	56	WASTE HEAT TREATMENT FACILITY (WHTF)
026	38	03	47	77	47	56	Lake Anna

II. FLOWS, SOURCES OF POLLUTION, AND TREATMENT TECHNOLOGIES

A. Attach a line drawing showing the water flow through the facility. Indicate sources of intake water, operations contributing wastewater to the effluent, and treatment units labeled to correspond to the more detailed descriptions in Item B. Construct a water balance on the line drawing by showing average flows between intakes, operations, treatment units, and outfalls. If a water balance cannot be determined *(e.g., for certain mining activities)*, provide a pictorial description of the nature and amount of any sources of water and any collection or treatment measures.

B. For each outfall, provide a description of: (1) All operations contributing wastewater to the effluent, including process wastewater, sanitary wastewater, cooling water, and storm water runoff; (2) The average flow contributed by each operation; and (3) The treatment received by the wastewater. Continue on additional sheets if necessary.

1. OUTFALLING *(list)*	2. OPERATION(S) CONTRIBUTING FLOW		3. TREATMENT		
	a. OPERATION *(list)*	b. AVERAGE FLOW *(include units)*	a. DESCRIPTION	b. LIST CODES FROM TABLE 2C-1	
024	Discharge Area #3	See Form 2F	Discharge to Lake Anna	4-A	
	(storm water only)				
025	Discharge Area #18	See Form 2F	Discharge to WHTF	4-A	
	(storm water only)				
026	Discharge Area #25	See Form 2F	Discharge to Lake Anna	4-A	
	(storm water only)				

OFFICIAL USE ONLY *(effluent guidelines sub-categories)*

CONTINUE ON REVERSE

STF ENV441F.1

C. Except for storm runoff, leaks, or spills, are any of the discharges described in Items II-A or B intermittent or seasonal?

[x] YES *(complete the following table)* [ ] NO *(go to Section III)*

1. OUTFALL NUMBER *(list)*	2. OPERATION(s) CONTRIBUTING FLOW *(list)*	3. FREQUENCY a. DAYS PER WEEK *(specify average)*	3. FREQUENCY b. MONTHS PER YEAR *(specify average)*	4. FLOW a. FLOW RATE *(in mgd)* 1. LONG TERM AVERAGE	4. FLOW a. FLOW RATE *(in mgd)* 2. MAXIMUM DAILY	4. FLOW b. TOTAL VOLUME *(specify with units)* 1. LONG TERM AVERAGE	4. FLOW b. TOTAL VOLUME *(specify with units)* 2. MAXIMUM DAILY	4. FLOW c. DURATION *(in days)*
105	Bearing Cooling Tower Blowdown	varies	varies	0.09mgd	17.3 mgd			approx 30
107	Bearing Cooling System Discharge	varies	varies	0 mgd	17.3 mgd			approx 30
108	Service Water Overboard	varies	varies	0.025 mgd	14.1 mgd			1
109, 110	Hot Well Drains-Unit 1, Unit 2	once/outage	1/18 mos	0.032 mgd	0.281 mgd			1
009	GW, SW, Backwash (SF and RO)	7	12	0.198 mgd	0.216 mgd			varies
013	Turbine Bldg Sump #1 & SW	varies	varies	emergency only				—
014	Turbine Bldg Sump #2 & SW	varies	varies	emergency only				—
019	Domestic Water Overflow (delete requested)				undetermined and infrequent			
021	Reverse Osmosis Drain Line		infrequent	0 mgd				1

III. PRODUCTION

A. Does an effluent guideline limitation promulgated by EPA under Section 304 of the Clean Water Act apply to your facility?

[x] YES *(complete Item III-B)* [ ] NO *(go to Section IV)*

B. Are the limitations in the applicable effluent guideline expressed in terms of production *(or other measure of operation)*?

[ ] YES *(complete Item III-C)* [x] NO *(go to Section IV)*

C. If you answered "yes" to Item III-B, list the quantity which represents an actual measurement of your level of production, expressed in the terms and units used in the applicable effluent guideline, and indicate the affected outfalls.

1. AVERAGE DAILY PRODUCTION a. QUANTITY PER DAY	b. UNITS OF MEASURE	c. OPERATION, PRODUCT, MATERIAL, ETC. *(specify)*	2. AFFECTED OUTFALLS *(list outfall numbers)*
N/A	N/A	N/A	N/A

IV. IMPROVEMENTS

A. Are you now required by any Federal, State or local authority to meet any implementation schedule for the construction, upgrading or operation of wastewater treatment equipment or practices or any other environmental programs which may affect the discharges described in this application? This includes, but is not limited to, permit conditions, administrative or enforcement orders, enforcement compliance schedule letters, stipulations, court orders, and grant or loan conditions.

[ ] YES *(complete the following table)* [x] NO *(go to Item IV-B)*

1. IDENTIFICATION OF CONDITION, AGREEMENT, ETC.	2. AFFECTED OUTFALLS a. NO.	2. AFFECTED OUTFALLS b. SOURCE OF DISCHARGE	3. BRIEF DESCRIPTION OF PROJECT	4. FINAL COMPLIANCE DATE a. REQUIRED	4. FINAL COMPLIANCE DATE b. PROJECTED

B. OPTIONAL: You may attach additional sheets describing any additional water pollution control programs *(or other environmental projects which may affect your discharges)* you now have underway or which you plan. Indicate whether each program is now underway or planned, and indicate your actual or planned schedules for construction. [ ] MARK "X" IF DESCRIPTION OF ADDITIONAL CONTROL PROGRAMS IS ATTACHED

EPA I.D. NUMBER *(copy from Item 1 of Form 1)*
VAD065376279

North Anna

V. INTAKE AND EFFLUENT CHARACTERISTICS

A, B, & C: See instructions before proceeding — Complete one set of tables for each outfall — Annotate the outfall number in the space provided. NOTE: Tables V-A, V-B, and V-C are included on separate sheets numbered V-1 through V-9.

D. Use the space below to list any of the pollutants listed in Table 2c-3 of the instructions, which you know or have reason to believe is discharged or may be discharged from any outfall. For every pollutant you list, briefly describe the reasons you believe it to be present and report any analytical data in your possession.

1. POLLUTANT	2. SOURCE	1.POLLUTANT	2. SOURCE
	NO 2C-3 POLLUTANTS. SEE ADDENDUM AND ATTACHMENTS FOR IDENTIFICATION OF OTHER POTENTIAL POLLUTANTS.		

VI. POTENTIAL DISCHARGES NOT COVERED BY ANALYSIS

Is any pollutant listed in Item V-C a substance or a component of a substance which you currently use or manufacture as an intermediate or final product or byproduct?

☒ YES *(list all such pollutants below)* ☐ NO *(go to Item VI-B)*

NONE WITH THE POSSIBLE EXCEPTION OF RADIOACTIVE SPECIES.
RADIOACTIVE RELEASES ARE REGULATED BY THE NUCLEAR REGULATORY COMMISSION AT THIS FACILITY AND ARE THEREFORE NOT LISTED HERE.

SEE ADDENDUM AND ATTACHMENTS FOR IDENTIFICATION OF OTHER POTENTIAL POLLUTANTS.

CONTINUE ON REVERSE

VII. BIOLOGICAL TOXICITY TESTING DATA

Do you have any knowledge or reason to believe that any biological test for acute or chronic toxicity has been made on any of your discharges or on a receiving water in relation to your discharge within the last 3 years?

[X] YES *(identify the test(s) and describe their purposes below)* [ ] NO *(go to Section VIII)*

TESTING AND REPORTING HAVE BEEN CONDUCTED IN ACCORDANCE WITH THE REQUIREMENTS OF THE TOXICS MANAGEMENT PROGRAM CONTAINED IN THE CURRENT VPDES PERMIT FOR OUTFALL 001. A SUMMARY IS ATTACHED.

VIII. CONTRACT ANALYSIS INFORMATION

Were any of the analyses reported in Item V performed by a contract laboratory or consulting firm?

[X] YES *(list the name, address, and telephone number of, and pollutants analyzed by, each such laboratory or firm below)* [ ] NO *(go to Section IX)*

A. NAME	B. ADDRESS	C. TELEPHONE *(area code & no.)*	D. POLLUTANTS ANALYZED (list)
CONTROLS FOR ENVIRONMENTAL POLLUTION, INC.	P.O. BOX 5351 SANTA FE, NM 87502	(800)545-2188	RADIUM
B & W NUCLEAR ENVIRONMENTAL SERVICES, INC.	P.O. BOX 11165 LYNCHBURG, VA 24506 - 1165	(804)522-6000	ALL OUTFALL 103 PARAMETERS
PRIMARY LABORATORIES, INC	2087 DABNEY ROAD RICHMOND, VA 23230	(804)213-0831	FECAL COLIFORM

IX. CERTIFICATION

I certify under penalty of law that this document and all attachments were prepared under my direction or supervision in accordance with a system designed to assure that qualified personnel properly gather and evaluate the information submitted. Based on my inquiry of the person or persons who manage the system or those persons directly responsible for gathering the information, the information submitted is, to the best of my knowledge and belief, true, accurate, and complete. I am aware that there are significant penalties for submitting false information, including the possibility of fine and imprisonment for knowing violations.

A. NAME & OFFICIAL TITLE *(type or print)*	B. PHONE NO. *(area code & no.)*
W.R.MATTHEWS, VICE PRESIDENT - STATION MANAGER	(540) 894-2101
C. SIGNATURE: WRMatthews	D. DATE SIGNED: 3/30/00

PLEASE PRINT OR TYPE IN THE UNSHADED AREAS ONLY. You may report some or all of this information on separate sheets *(use the same format)* instead of completing these pages. SEE INSTRUCTIONS.

NORTH ANNA POWER STATION

EPA I.D. NUMBER *(copy from Item 1 of Form 1)*

VAD065376279

Representing Outfalls 016, 021, 107

V. INTAKE AND EFFLUENT CHARACTERISTICS *(continued from page 3 of Form 2-C)*

SEE ADDENDUM FOR MORE INFO.

OUTFALL NO. **Intake**

PART A - You must provide the results of at least one analysis for every pollutant in this table. Complete one table for each outfall. See instructions for additional details.

1. POLLUTANT	2. EFFLUENT a. MAXIMUM DAILY VALUE (1) CONCENTRATION	2. EFFLUENT a. MAXIMUM DAILY VALUE (2) MASS	2. EFFLUENT b. MAXIMUM 30 DAY VALUE (if available) (1) CONCENTRATION	2. EFFLUENT b. MAXIMUM 30 DAY VALUE (if available) (2) MASS	2. EFFLUENT c. LONG TERM AVRG. VALUE (if available) (1) CONCENTRATION	2. EFFLUENT c. LONG TERM AVRG. VALUE (if available) (2) MASS	2. EFFLUENT d. NO. OF ANALYSES	3. UNITS (specify if blank) a. CONCENTRATION	3. UNITS (specify if blank) b. MASS	4. INTAKE (optional) a. LONG TERM AVERAGE VALUE (1) CONCENTRATION	4. INTAKE (optional) a. LONG TERM AVERAGE VALUE (2) MASS	4. INTAKE (optional) b. NO. OF ANALYSES
a. Biochemical Oxygen Demand *(BOD)*	NA	NA	NA	NA	NA	NA	NA	ppm	kg/d	ND	NA	1
b. Chemical Oxygen Demand *(COD)*	NA	NA	NA	NA	NA	NA	NA	ppm	kg/d	ND	NA	1
c. Total Organic Carbon *(TOC)*	NA	NA	NA	NA	NA	NA	NA	ppm	kg/d	3.2	NA	1
d. Total Suspended Solids *(TSS)*	NA	NA	NA	NA	NA	NA	NA	ppm	kg/d	ND	NA	1
e. Ammonia *(as N)*	NA	NA	NA	NA	NA	NA	NA	ppm	kg/d	0.04	NA	1
f. Flow	VALUE NA		VALUE NA		VALUE NA		NA	MGD	NA	VALUE NA		1
g. Temperature *(winter)*	VALUE NA		VALUE NA		VALUE NA		NA	°C		VALUE NA		1
h. Temperature *(summer)*	VALUE NA		VALUE NA		VALUE NA		NA	°C		VALUE 26.2		1
i. pH	MINIMUM NA	MAXIMUM NA	MINIMUM NA	MAXIMUM NA			NA	STANDARD UNITS		pH = 6.6 (1 analyses)		

PART B - Mark "X" in column 2-a for each pollutant you know or have reason to believe is present. Mark "X" in column 2-b for each pollutant you believe to be absent. If you mark column 2a for any pollutant which is limited either directly, or indirectly but expressly, in an effluent limitations guideline, you must provide the results of at least one analysis for that pollutant. For other pollutants for which you mark column 2a, you must provide quantitative data or an explanation of their presence in your discharge. Complete one table for each outfall. See the instructions for additional details and requirements.

1. POLLUTANT AND CAS NO. *(if available)*	2. MARK 'X' a. BELIEVED PRESENT	2. MARK 'X' b. BELIEVED ABSENT	3. EFFLUENT a. MAXIMUM DAILY VALUE (1) CONCENTRATION	3. EFFLUENT a. MAXIMUM DAILY VALUE (2) MASS	3. EFFLUENT b. MAXIMUM 30 DAY VALUE (if available) (1) CONCENTRATION	3. EFFLUENT b. MAXIMUM 30 DAY VALUE (if available) (2) MASS	3. EFFLUENT c. LONG TERM AVRG. VALUE (if available) (1) CONCENTRATION	3. EFFLUENT c. LONG TERM AVRG. VALUE (if available) (2) MASS	3. EFFLUENT d. NO. OF ANALYSES	4. UNITS a. CONCENTRATION	4. UNITS b. MASS	5. INTAKE (optional) a. LONG TERM AVERAGE VALUE (1) CONCENTRATION	5. INTAKE (optional) a. LONG TERM AVERAGE VALUE (2) MASS	5. INTAKE (optional) b. NO. OF ANALYSES
a. Bromide (24959-67-9)		x	NA	NA	NA	NA	NA	NA	NA	ppm	kg/d	0.29	NA	1
b. Chlorine, Total Residual		x	NA	NA	NA	NA	NA	NA	NA	ppm	kg/d	ND	NA	1
c. Color		x	NA	NA	NA	NA	NA	NA	NA	color units	NA	20	NA	1
d. Fecal Coliform		x	NA	NA	NA	NA	NA	NA	NA	col/100ml	NA	NA	NA	NA
e. Fluoride (16984-48-8)		x	NA	NA	NA	NA	NA	NA	NA	ppm	kg/d	0.052	NA	1
f. Nitrate—Nitrite *(as N)*		x	NA	NA	NA	NA	NA	NA	NA	ppm	kg/d	0.13	NA	1

ITEM V-B CONTINUED FROM FRONT VAD065376279 NORTH ANNA POWER STATION INTAKE Representing Outfalls 016, 021, 107

1. POLLUTANT AND CAS NO. (if available)	2. MARK 'X'		3. EFFLUENT							4. UNITS		5. INTAKE (optional)		
	a. BELIEVED PRESENT	b. BELIEVED ABSENT	a. MAXIMUM DAILY VALUE		b. MAXIMUM 30 DAY VALUE (if available)		c. LONG TERM AVRG. VALUE (if available)		d. NO. OF ANALYSES	a. CONCENTRATION	b. MASS	a. LONG TERM AVERAGE VALUE		b. NO. OF ANALYSES
			(1) CONCENTRATION	(2) MASS	(1) CONCENTRATION	(2) MASS	(1) CONCENTRATION	(2) MASS				(1) CONCENTRATION	(2) MASS	
g. Nitrogen, Total Organic (as N)		x	NA	NA	NA	NA	NA	NA	1	ppm	kg/d	0.90	NA	1
h. Oil and Grease		x	NA	NA	NA	NA	NA	NA	1	ppm	kg/d	ND	NA	1
i. Phosphorus (as P), Total (7723-14-0)		x	NA	NA	NA	NA	NA	NA	1	ppm	kg/d	0.02	NA	1
j. Radioactivity														
(1) Alpha, Total		x	NA	NA	NA	NA	NA	NA	1	pCi/L	NA	1.00	NA	1
(2) Beta, Total		x	NA	NA	NA	NA	NA	NA	1	pCi/L	NA	2.40	NA	1
(3) Radium, Total		x	NA	NA	NA	NA	NA	NA	NA	NA	NA	NA	NA	NA
(4) Radium 226, Total		x	NA	NA	NA	NA	NA	NA	NA	NA	NA	NA	NA	NA
k. Sulfate (as SO_4) (14808-79-8)		x	NA	NA	NA	NA	NA	NA	1	ppm	kg/d	7.45	NA	1
l. Sulfide (as S)		x	NA	NA	NA	NA	NA	NA	1	ppm	kg/d	0.03	NA	1
m. Sulfite (as SO_3) (14265-45-3)		x	NA	NA	NA	NA	NA	NA	NA	ppm	kg/d	NA	NA	NA
n. Surfactants		x	NA	NA	NA	NA	NA	NA	1	ppm	kg/d	ND	NA	1
o. Aluminum, Total (7429-90-5)		x	NA	NA	NA	NA	NA	NA	1	ppm	kg/d	0.094	NA	1
p. Barium, Total (7440-39-3)		x	NA	NA	NA	NA	NA	NA	1	ppm	kg/d	0.027	NA	1
q. Boron, Total (7440-42-8)		x	NA	NA	NA	NA	NA	NA	1	ppm	kg/d	ND	NA	1
r. Cobalt, Total (7440-48-4)		x	NA	NA	NA	NA	NA	NA	1	ppm	kg/d	ND	NA	1
s. Iron, Total (7439-89-6)		x	NA	NA	NA	NA	NA	NA	1	ppm	kg/d	0.14	NA	1
t. Magnesium, Total (7439-95-4)		x	NA	NA	NA	NA	NA	NA	1	ppm	kg/d	1.78	NA	1
u. Molybdenum, Total (7439-98-7)		x	NA	NA	NA	NA	NA	NA	1	ppm	kg/d	ND	NA	1
v. Manganese, Total (7439-96-5)		x	NA	NA	NA	NA	NA	NA	1	ppm	kg/d	0.22	NA	1
w. Tin, Total (7440-31-5)		x	NA	NA	NA	NA	NA	NA	1	ppm	kg/d	ND	NA	1
x. Titanium, Total (7440-32-6)		x	NA	NA	NA	NA	NA	NA	1	ppm	kg/d	ND	NA	1

CONTINUE ON PAGE V-3

NORTH ANNA POWER STATION

EPA I.D. NUMBER (copy from Item 1 of Form 1)	OUTFALL NUMBER
VAD065376279	INTAKE

CONTINUED FROM PAGE 3 OF FORM 2-C

Representing Outfalls 016, 021, 107

PART C - If you are a primary industry and this outfall contains process wastewater, refer to Table 2c-2 in the instructions to determine which of the GC/MS fractions you must test for. Mark "X" in column 2-a for all such GC/MS fractions that apply to your industry and for ALL toxic metals, cyanides, and total phenols. If you are not required to mark column 2-a *(secondary industries, nonprocess wastewater outfalls, and nonrequired GC/MS fractions)*, mark "X" in column 2-b for each pollutant you know or have reason to believe is present. Mark "X" in column 2-c for each pollutant you believe is absent. If you mark column 2a for any pollutant, you must provide the results of at least one analysis for that pollutant. If you mark column 2b for any pollutant, you must provide the results of at least one analysis for that pollutant if you know or have reason to believe it will be discharged in concentrations of 10 ppb or greater. If you mark column 2b for acrolein, acrylonitrile, 2,4 dinitrophenol, or 2-methyl-4, 6 dinitrophenol, you must provide the results of at least one analysis for each of these pollutants which you know or have reason to believe that you discharge in concentrations of 100 ppb or greater. Otherwise, for pollutants for which you mark column 2b, you must either submit at least one analysis or briefly describe the reasons the pollutant is expected to be discharged. Note that there are 7 pages to this part; please review each carefully. Complete one table *(all 7 pages)* for each outfall. See instructions for additional details and requirements.

1. POLLUTANT AND CAS NUMBER (if available)	2. MARK 'X'			3. EFFLUENT							4. UNITS		5. INTAKE (optional)		
	a. TESTING REQUIRED	b. BELIEVED PRESENT	c. BELIEVED ABSENT	a. MAXIMUM DAILY VALUE		b. MAXIMUM 30 DAY VALUE (if available)		c. LONG TERM AVRG. VALUE (if available)		d. NO. OF ANALYSES	a. CONCENTRATION	b. MASS	a. LONG TERM AVERAGE VALUE		b. NO. OF ANALYSES
				(1) CONCENTRATION	(2) MASS	(1) CONCENTRATION	(2) MASS	(1) CONCENTRATION	(2) MASS				(1) CONCENTRATION	(2) MASS	
METALS, CYANIDE, AND TOTAL PHENOLS															
1M. Antimony, Total (7440-36-0)			x	ND	NA	NA	NA	NA	NA	1	ppm	kg/d	ND	NA	1
2M. Arsenic, Total (7440-38-2)			x	ND	NA	NA	NA	NA	NA	1	ppm	kg/d	ND	NA	1
3M. Beryllium, Total, 7440-41-7)			x	ND	NA	NA	NA	NA	NA	1	ppm	kg/d	ND	NA	1
4M. Cadmium, Total (7440-43-9)			x	ND	NA	NA	NA	NA	NA	1	ppm	kg/d	ND	NA	1
5M. Chromium, Total (7440-47-3)			x	ND	NA	NA	NA	NA	NA	1	ppm	kg/d	ND	NA	1
6M. Copper, Total (7440-50-8)			x	ND	NA	NA	NA	NA	NA	1	ppm	kg/d	ND	NA	1
7M. Lead, Total (7439-92-1)			x	ND	NA	NA	NA	NA	NA	1	ppm	kg/d	0.003	NA	1
8M. Mercury, Total (7439-97-6)			x	ND	NA	NA	NA	NA	NA	1	ppm	kg/d	0.002	NA	1
9M. Nickel, Total (7440-02-0)			x	ND	NA	NA	NA	NA	NA	1	ppm	kg/d	ND	NA	1
10M. Selenium, Total (7782-49-2)			x	ND	NA	NA	NA	NA	NA	1	ppm	kg/d	ND	NA	1
11M. Silver, Total (7440-22-4)			x	ND	NA	NA	NA	NA	NA	1	ppm	kg/d	ND	NA	1
12M. Thallium, Total (7440-28-0)			x	ND	NA	NA	NA	NA	NA	1	ppm	kg/d	ND	NA	1
13M. Zinc, Total (7440-66-6)			x	ND	NA	NA	NA	NA	NA	1	ppm	kg/d	ND	NA	1
14M. Cyanide, Total (57-12-5)			x	ND	NA	NA	NA	NA	NA	1	ppm	kg/d	ND	NA	1
15M. Phenols, Total			x	ND	NA	NA	NA	NA	NA	1	ppm	kg/d	0.06	NA	1
DIOXIN															
2,3,7,8 Tetrachlorodibenzo-P-Dioxin (1764-01-6)			x	DESCRIBE RESULTS NA											

CONTINUE ON REVERSE

STF ENV441F 7

CONTINUED FROM THE FRONT

VAD065376279 NORTH ANNA POWER STATION INTAKE Representing Outfalls 016, 021, 107

1. POLLUTANT AND CAS NUMBER (if available)	2. MARK 'X' a. TESTING REQUIRED	b. BELIEVED PRESENT	c. BELIEVED ABSENT	3. EFFLUENT a. MAXIMUM DAILY VALUE (1) CONCENTRATION	(2) MASS	b. MAXIMUM 30 DAY VALUE (if available) (1) CONCENTRATION	(2) MASS	c. LONG TERM AVRG. VALUE (if available) (1) CONCENTRATION	(2) MASS	d. NO. OF ANALYSES	4. UNITS a. CONCENTRATION	b. MASS	5. INTAKE (optional) a. LONG TERM AVERAGE VALUE (1) CONCENTRATION	(2) MASS	b. NO. OF ANALYSES
GC/MS FRACTION — VOLATILE COMPOUNDS															
1V. Acrolein (107-02-8)			x	ND	NA	NA	NA	NA	NA	1	ppm	kg/d	ND	NA	1
2V. Acrylonitrile (107-13-1)			x	ND	NA	NA	NA	NA	NA	1	ppm	kg/d	ND	NA	1
3V. Benzene (71-43-2)			x	ND	NA	NA	NA	NA	NA	1	ppm	kg/d	ND	NA	1
4V. Bis (*Chloromethyl*) Ether (542-88-1)			NA	not	required	not	required	not	required	NA	NA	NA	NA	NA	NA
5V. Bromoform (75-25-2)			x	ND	NA	NA	NA	NA	NA	1	ppm	kg/d	ND	NA	1
6V. Carbon Tetrachloride (56-23-5)			x	ND	NA	NA	NA	NA	NA	1	ppm	kg/d	ND	NA	1
7V. Chlorobenzene (108-90-7)			x	ND	NA	NA	NA	NA	NA	1	ppm	kg/d	ND	NA	1
8V. Chlorodibromomethane (124-48-1)			x	ND	NA	NA	NA	NA	NA	1	ppm	kg/d	ND	NA	1
9V. Chloroethane (75-00-3)			x	ND	NA	NA	NA	NA	NA	1	ppm	kg/d	ND	NA	1
10V. 2-Chloroethylvinyl Ether (110-75-8)			x	ND	NA	NA	NA	NA	NA	1	ppm	kg/d	ND	NA	1
11V. Chloroform (67-66-3)			x	ND	NA	NA	NA	NA	NA	1	ppm	kg/d	ND	NA	1
12V. Dichlorobromomethane (75-27-4)			x	ND	NA	NA	NA	NA	NA	1	ppm	kg/d	ND	NA	1
13V. Dichlorodifluoromethane (75-71-8)			NA	not	required	not	required	not	required	NA	NA	NA	NA	NA	NA
14V. 1,1-Dichloroethane (75-34-3)			x	ND	NA	NA	NA	NA	NA	1	ppm	kg/d	ND	NA	1
15V. 1,2-Dichloroethane (107-06-2)			x	ND	NA	NA	NA	NA	NA	1	ppm	kg/d	ND	NA	1
16V. 1,1-Dichloroethylene (75-35-4)			x	ND	NA	NA	NA	NA	NA	1	ppm	kg/d	ND	NA	1
17V. 1,2-Dichloropropane (78-87-5)			x	ND	NA	NA	NA	NA	NA	1	ppm	kg/d	ND	NA	1
18V. 1,3-Dichloropropylene (542-75-6)			x	ND	NA	NA	NA	NA	NA	1	ppm	kg/d	ND	NA	1
19V. Ethylbenzene (100-41-4)			x	ND	NA	NA	NA	NA	NA	1	ppm	kg/d	ND	NA	1
20V. Methyl Bromide (74-83-9)			x	ND	NA	NA	NA	NA	NA	1	ppm	kg/d	ND	NA	1
21V. Methyl Chloride (74-87-3)			x	ND	NA	NA	NA	NA	NA	1	ppm	kg/d	ND	NA	1

CONTINUE ON PAGE V-5

NORTH ANNA POWER STATION

EPA I.D. NUMBER (copy from Item 1 of Form 1)	OUTFALL NUMBER
VAD065376279	INTAKE

Representing Outfalls 016, 021, 107

CONTINUED FROM PAGE V-4

1. POLLUTANT AND CAS NUMBER (if available)	2. MARK 'X'			3. EFFLUENT							4. UNITS		5. INTAKE (optional)		
	a. TESTING REQUIRED	b. BELIEVED PRESENT	c. BELIEVED ABSENT	a. MAXIMUM DAILY VALUE		b. MAXIMUM 30 DAY VALUE (if available)		c. LONG TERM AVRG. VALUE (if available)		d. NO. OF ANALYSES	a. CONCENTRATION	b. MASS	a. LONG TERM AVERAGE VALUE		b. NO. OF ANALYSES
				(1) CONCENTRATION	(2) MASS	(1) CONCENTRATION	(2) MASS	(1) CONCENTRATION	(2) MASS				(1) CONCENTRATION	(2) MASS	
GC/MS FRACTION — VOLATILE COMPOUNDS *(continued)*															
22V. Methylene Chloride (75-09-2)			x	ND	NA	NA	NA	NA	NA	1	ppm	kg/d	ND	NA	1
23V. 1,1,2,2-Tetrachloroethane (79-34-5)			x	ND	NA	NA	NA	NA	NA	1	ppm	kg/d	ND	NA	1
24V. Tetrachloroethylene (127-18-4)			x	ND	NA	NA	NA	NA	NA	1	ppm	kg/d	ND	NA	1
25V. Toluene (108-88-3)			x	ND	NA	NA	NA	NA	NA	1	ppm	kg/d	ND	NA	1
26V. 1,2-Trans-Dichloroethylene (156-60-5)			x	ND	NA	NA	NA	NA	NA	1	ppm	kg/d	ND	NA	1
27V. 1,1,1-Trichloroethane (71-55-6)			x	ND	NA	NA	NA	NA	NA	1	ppm	kg/d	ND	NA	1
28V. 1,1,2-Trichloroethane (79-00-5)			x	ND	NA	NA	NA	NA	NA	1	ppm	kg/d	ND	NA	1
29V. Trichloroethylene (79-01-6)			x	ND	NA	NA	NA	NA	NA	1	ppm	kg/d	ND	NA	1
30V. Trichlorofluoromethane (75-69-4)			NA	not	required	not	required	not	required	NA	NA	NA	NA	NA	NA
31V. Vinyl Chloride (75-01-4)			x	ND	NA	NA	NA	NA	NA	1	ppm	kg/d	ND	NA	1
GC/MS FRACTION — ACID COMPOUNDS															
1A. 2-Chlorophenol (95-57-8)			x	ND	NA	NA	NA	NA	NA	1	ppm	kg/d	ND	NA	1
2A. 2,4-Dichlorophenol (120-83-2)			x	ND	NA	NA	NA	NA	NA	1	ppm	kg/d	ND	NA	1
3A. 2,4-Dimethylphenol (105-67-9)			x	ND	NA	NA	NA	NA	NA	1	ppm	kg/d	ND	NA	1
4A. 4,6-Dinitro-O-Cresol (534-52-1)			x	ND	NA	NA	NA	NA	NA	1	ppm	kg/d	ND	NA	1
5A. 2,4-Dinitrophenol (51-28-5)			x	ND	NA	NA	NA	NA	NA	1	ppm	kg/d	ND	NA	1
6A. 2-Nitrophenol (88-75-5)			x	ND	NA	NA	NA	NA	NA	1	ppm	kg/d	ND	NA	1
7A. 4-Nitrophenol (100-02-7)			x	ND	NA	NA	NA	NA	NA	1	ppm	kg/d	ND	NA	1
8A. P-Chloro-M-Cresol (59-50-7)			x	ND	NA	NA	NA	NA	NA	1	ppm	kg/d	ND	NA	1
9A. Pentachlorophenol (87-86-5)			x	ND	NA	NA	NA	NA	NA	1	ppm	kg/d	ND	NA	1
10A. Phenol (108-95-2)			x	ND	NA	NA	NA	NA	NA	1	ppm	kg/d	ND	NA	1
11A. 2,4,6-Trichlorophenol (88-06-2)			x	ND	NA	NA	NA	NA	NA	1	ppm	kg/d	ND	NA	1

CONTINUE ON REVERSE

STF ENV441F.9

VAD065376279 NORTH ANNA POWER STATION INTAKE Representing Outfalls 016, 021, 107

1. POLLUTANT AND CAS NUMBER (if available)	2. MARK 'X' a. TESTING REQUIRED	b. BELIEVED PRESENT	c. BELIEVED ABSENT	3. EFFLUENT a. MAXIMUM DAILY VALUE (1) CONCENTRATION	(2) MASS	b. MAXIMUM 30 DAY VALUE (if available) (1) CONCENTRATION	(2) MASS	c. LONG TERM AVRG. VALUE (if available) (1) CONCENTRATION	(2) MASS	d. NO. OF ANALYSES	4. UNITS a. CONCENTRATION	b. MASS	5. INTAKE (optional) a. LONG TERM AVERAGE VALUE (1) CONCENTRATION	(2) MASS	b. NO. OF ANALYSES
GC/MS FRACTION — BASE/NEUTRAL COMPOUNDS															
1B. Acenaphthene (83-32-9)			x	ND	NA	NA	NA	NA	NA	1	ppm	kg/d	ND	NA	1
2B. Acenaphtylene (208-96-8)			x	ND	NA	NA	NA	NA	NA	1	ppm	kg/d	ND	NA	1
3B. Anthracene (120-12-7)			x	ND	NA	NA	NA	NA	NA	1	ppm	kg/d	ND	NA	1
4B. Benzidine (92-87-5)			x	ND	NA	NA	NA	NA	NA	1	ppm	kg/d	ND	NA	1
5B. Benzo *(a)* Anthracene (56-55-3)			x	ND	NA	NA	NA	NA	NA	1	ppm	kg/d	ND	NA	1
6B. Benzo *(a)* Pyrene (50-32-8)			x	ND	NA	NA	NA	NA	NA	1	ppm	kg/d	ND	NA	1
7B. 3,4-Benzo-fluoranthene (205-99-2)			x	ND	NA	NA	NA	NA	NA	1	ppm	kg/d	ND	NA	1
8B. Benzo *(ghi)* Perylene (191-24-2)			x	ND	NA	NA	NA	NA	NA	1	ppm	kg/d	ND	NA	1
9B. Benzo *(k)* Fluoranthene (207-08-9)			x	ND	NA	NA	NA	NA	NA	1	ppm	kg/d	ND	NA	1
10B. Bis *(2-Chloro-ethoxy)* Methane (111-91-1)			x	ND	NA	NA	NA	NA	NA	1	ppm	kg/d	ND	NA	1
11B. Bis *(2-Chloro-ethyl)* Ether (111-44-4)			x	ND	NA	NA	NA	NA	NA	1	ppm	kg/d	ND	NA	1
12B. Bis *(2-Chloroiso-propyl)* Ether (102-60-1)			x	ND	NA	NA	NA	NA	NA	1	ppm	kg/d	ND	NA	1
13B. Bis *(2-Ethyl-hexyl)* Phthalate (117-81-7)			x	ND	NA	NA	NA	NA	NA	1	ppm	kg/d	ND	NA	1
14B. 4-Bromo-phenyl Phenyl Ether (101-55-3)			x	ND	NA	NA	NA	NA	NA	1	ppm	kg/d	ND	NA	1
15B. Butyl Benzyl Phthalate (85-68-7)			x	ND	NA	NA	NA	NA	NA	1	ppm	kg/d	ND	NA	1
16B. 2-Chloro-naphthalene (91-58-7)			x	ND	NA	NA	NA	NA	NA	1	ppm	kg/d	ND	NA	1
17B. 4-Chloro-phenyl Phenyl Ether (7005-72-3)			x	ND	NA	NA	NA	NA	NA	1	ppm	kg/d	ND	NA	1
18B. Chrysene (218-01-9)			x	ND	NA	NA	NA	NA	NA	1	ppm	kg/d	ND	NA	1
19B. Dibenzo *(a, h)* Anthracene (53-70-3)			x	ND	NA	NA	NA	NA	NA	1	ppm	kg/d	ND	NA	1
20B. 1,2-Dichloro-benzene (95-50-1)			x	ND	NA	NA	NA	NA	NA	1	ppm	kg/d	ND	NA	1
21B. 1,3-Dichloro-benzene (541-73-1)			x	ND	NA	NA	NA	NA	NA	1	ppm	kg/d	ND	NA	1

CONTINUE ON PAGE V-7

NORTH ANNA POWER STATION

EPA I.D. NUMBER (copy from Item 1 of Form 1)	OUTFALL NUMBER
VAD065376279	INTAKE

CONTINUED FROM PAGE V-6

Representing Outfalls 016, 021, 107

1. POLLUTANT AND CAS NUMBER (if available)	2. MARK 'X'			3. EFFLUENT							4. UNITS		5. INTAKE (optional)		
	a. TESTING REQUIRED	b. BELIEVED PRESENT	c. BELIEVED ABSENT	a. MAXIMUM DAILY VALUE		b. MAXIMUM 30 DAY VALUE (if available)		c. LONG TERM AVRG. VALUE (if available)		d. NO. OF ANALYSES	a. CONCENTRATION	b. MASS	a. LONG TERM AVERAGE VALUE		b. NO. OF ANALYSES
				(1) CONCENTRATION	(2) MASS	(1) CONCENTRATION	(2) MASS	(1) CONCENTRATION	(2) MASS				(1) CONCENTRATION	(2) MASS	
GC/MS FRACTION — BASE/NEUTRAL COMPOUNDS *(continued)*															
22B. 1,4-Dichlorobenzene (106-46-7)			x	ND	NA	NA	NA	NA	NA	1	ppm	kg/d	ND	NA	1
23B. 3,3'-Dichlorobenzidine (91-94-1)			x	ND	NA	NA	NA	NA	NA	1	ppm	kg/d	ND	NA	1
24B. Diethyl Phthalate (84-66-2)			x	ND	NA	NA	NA	NA	NA	1	ppm	kg/d	ND	NA	1
25B. Dimethyl Phthalate (131-11-3)			x	ND	NA	NA	NA	NA	NA	1	ppm	kg/d	ND	NA	1
26B. Di-N-Butyl Phthalate (84-74-2)			x	ND	NA	NA	NA	NA	NA	1	ppm	kg/d	ND	NA	1
27B. 2,4-Dinitrotoluene (121-14-2)			x	ND	NA	NA	NA	NA	NA	1	ppm	kg/d	ND	NA	1
28B. 2,6-Dinitrotoluene (606-20-2)			x	ND	NA	NA	NA	NA	NA	1	ppm	kg/d	ND	NA	1
29B. Di-N-Octyl Phthalate (117-84-0)			x	ND	NA	NA	NA	NA	NA	1	ppm	kg/d	ND	NA	1
30B. 1,2-Diphenylhydrazine *(as Azobenzene)* (122-66-7)			x	ND	NA	NA	NA	NA	NA	1	ppm	kg/d	ND	NA	1
31B. Fluoranthene (206-44-0)			x	ND	NA	NA	NA	NA	NA	1	ppm	kg/d	ND	NA	1
32B. Fluorene (86-73-7)			x	ND	NA	NA	NA	NA	NA	1	ppm	kg/d	ND	NA	1
33B. Hexachlorobenzene (118-74-1)			x	ND	NA	NA	NA	NA	NA	1	ppm	kg/d	ND	NA	1
34B. Hexachlorobutadiene (87-68-3)			x	ND	NA	NA	NA	NA	NA	1	ppm	kg/d	ND	NA	1
35B. Hexachlorocyclopentadiene (77-47-4)			x	ND	NA	NA	NA	NA	NA	1	ppm	kg/d	ND	NA	1
36B. Hexachloroethane (67-72-1)			x	ND	NA	NA	NA	NA	NA	1	ppm	kg/d	ND	NA	1
37B. Indeno *(1,2,3-cd)* Pyrene (193-39-5)			x	ND	NA	NA	NA	NA	NA	1	ppm	kg/d	ND	NA	1
38B. Isophorone (78-59-1)			x	ND	NA	NA	NA	NA	NA	1	ppm	kg/d	ND	NA	1
39B. Naphthalene (91-20-3)			x	ND	NA	NA	NA	NA	NA	1	ppm	kg/d	ND	NA	1
40B. Nitrobenzene (98-95-3)			x	ND	NA	NA	NA	NA	NA	1	ppm	kg/d	ND	NA	1
41B. N-Nitrosodimethylamine (62-75-9)			x	ND	NA	NA	NA	NA	NA	1	ppm	kg/d	ND	NA	1
42B. N-Nitrosodi-N-Propylamine (621-64-7)			x	ND	NA	NA	NA	NA	NA	1	ppm	kg/d	ND	NA	1

CONTINUE ON REVERSE

STF ENV441F 11

1. POLLUTANT AND CAS NUMBER (if available)	2. MARK 'X'			3. EFFLUENT							4. UNITS		5. INTAKE (optional)		
	a. TESTING REQUIRED	b. BELIEVED PRESENT	c. BELIEVED ABSENT	a. MAXIMUM DAILY VALUE		b. MAXIMUM 30 DAY VALUE (if available)		c. LONG TERM AVRG. VALUE (if available)		d. NO. OF ANALYSES	a. CONCENTRATION	b. MASS	a. LONG TERM AVERAGE VALUE		b. NO. OF ANALYSES
				(1) CONCENTRATION	(2) MASS	(1) CONCENTRATION	(2) MASS	(1) CONCENTRATION	(2) MASS				(1) CONCENTRATION	(2) MASS	
GC/MS FRACTION — BASE/NEUTRAL COMPOUNDS *(continued)*															
43B. N-Nitrosodiphenylamine (86-30-6)			x	ND	NA	NA	NA	NA	NA	1	ppm	kg/d	ND	NA	1
44B. Phenanthrene (85-01-8)			x	ND	NA	NA	NA	NA	NA	1	ppm	kg/d	ND	NA	1
45B. Pyrene (129-00-0)			x	ND	NA	NA	NA	NA	NA	1	PPM	kg/d	ND	NA	1
46B. 1,2,4-Trichlorobenzene (120-82-1)			x	ND	NA	NA	NA	NA	NA	1	ppm	kg/d	ND	NA	1
GC/MS FRACTION — PESTICIDES															
1P. Aldrin (309-00-2)			x	ND	NA	NA	NA	NA	NA	1	ppm	kg/d	ND	NA	1
2P. α-BHC (319-84-6)			x	ND	NA	NA	NA	NA	NA	1	ppm	kg/d	ND	NA	1
3P. β-BHC (319-85-7)			x	ND	NA	NA	NA	NA	NA	1	ppm	kg/d	ND	NA	1
4P. γ-BHC (58-89-9)			x	ND	NA	NA	NA	NA	NA	1	ppm	kg/d	ND	NA	1
5P. δ-BHC (319-86-8)			x	ND	NA	NA	NA	NA	NA	1	ppm	kg/d	ND	NA	1
6P. Chlordane (57-74-9)			x	ND	NA	NA	NA	NA	NA	1	ppm	kg/d	ND	NA	1
7P. 4,4'-DDT (50-29-3)			x	ND	NA	NA	NA	NA	NA	1	ppm	kg/d	ND	NA	1
8P. 4,4'-DDE (72-55-9)			x	ND	NA	NA	NA	NA	NA	1	ppm	kg/d	ND	NA	1
9P. 4,4'-DDD (72-54-8)			x	ND	NA	NA	NA	NA	NA	1	ppm	kg/d	ND	NA	1
10P. Dieldrin (60-57-1)			x	ND	NA	NA	NA	NA	NA	1	ppm	kg/d	ND	NA	1
11P. α-Endosulfan (115-29-7)			x	ND	NA	NA	NA	NA	NA	1	ppm	kg/d	ND	NA	1
12P. β-Endosulfan (115-29-7)			x	ND	NA	NA	NA	NA	NA	1	ppm	kg/d	ND	NA	1
13P. Endosulfan Sulfate (1031-07-8)			x	ND	NA	NA	NA	NA	NA	1	ppm	kg/d	ND	NA	1
14P. Endrin (72-20-8)			x	ND	NA	NA	NA	NA	NA	1	ppm	kg/d	ND	NA	1
15P. Endrin Aldehyde (7421-93-4)			x	ND	NA	NA	NA	NA	NA	1	ppm	kg/d	ND	NA	1
16P. Heptachlor (76-44-8)			x	ND	NA	NA	NA	NA	NA	1	ppm	kg/d	ND	NA	1

CONTINUE ON PAGE V-9

NORTH ANNA POWER STATION

EPA I.D. NUMBER (copy from Item 1 of Form 1)	OUTFALL NUMBER
VAD065376279	INTAKE

CONTINUED FROM PAGE V-8

Representing Outfalls 016, 021, 107

1. POLLUTANT AND CAS NUMBER (if available)	2. MARK 'X'			3. EFFLUENT							4. UNITS		5. INTAKE (optional)		
	a. TESTING REQUIRED	b. BELIEVED PRESENT	c. BELIEVED ABSENT	a. MAXIMUM DAILY VALUE		b. MAXIMUM 30 DAY VALUE (if available)		c. LONG TERM AVRG. VALUE (if available)		d. NO. OF ANALYSES	a. CONCENTRATION	b. MASS	a. LONG TERM AVERAGE VALUE		b. NO. OF ANALYSES
				(1) CONCENTRATION	(2) MASS	(1) CONCENTRATION	(2) MASS	(1) CONCENTRATION	(2) MASS				(1) CONCENTRATION	(2) MASS	
GC/MS FRACTION — PESTICIDES (continued)															
17P. Heptachlor Epoxide (1024-57-3)			x	ND	NA	NA	NA	NA	NA	1	ppm	kg/d	ND	NA	1
18P. PCB-1242 (53469-21-9)			x	ND	NA	NA	NA	NA	NA	1	ppm	kg/d	ND	NA	1
19P. PCB-1254 (11097-69-1)			x	ND	NA	NA	NA	NA	NA	1	ppm	kg/d	ND	NA	1
20P. PCB-1221 (11104-28-2)			x	ND	NA	NA	NA	NA	NA	1	ppm	kg/d	ND	NA	1
21P. PCB-1232 (11141-16-5)			x	ND	NA	NA	NA	NA	NA	1	ppm	kg/d	ND	NA	1
22P. PCB-1248 (12672-29-6)			x	ND	NA	NA	NA	NA	NA	1	ppm	kg/d	ND	NA	1
23P. PCB-1260 (11096-82-5)			x	ND	NA	NA	NA	NA	NA	1	ppm	kg/d	ND	NA	1
24P. PCB-1016 (12674-11-2)			x	ND	NA	NA	NA	NA	NA	1	ppm	kg/d	ND	NA	1
25P. Toxaphene (8001-35-2)			x	ND	NA	NA	NA	NA	NA	1	ppm	kg/d	ND	NA	1

PLEASE PRINT OR TYPE IN THE UNSHADED AREAS ONLY. You may report some or all of this information on separate sheets *(use the same format)* instead of completing these pages. SEE INSTRUCTIONS.

NORTH ANNA POWER STATION

EPA I.D. NUMBER *(copy from Item 1 of Form 1)*

VAD065376279

Discharge of Condenser Cooling Water from WHTF at Dike 3

V. INTAKE AND EFFLUENT CHARACTERISTICS *(continued from page 3 of Form 2-C)*

SEE ADDENDUM FOR MORE INFO.

OUTFALL NO. 001

PART A - You must provide the results of at least one analysis for every pollutant in this table. Complete one table for each outfall. See instructions for additional details.

1. POLLUTANT	2. EFFLUENT a. MAXIMUM DAILY VALUE (1) CONCENTRATION	a. MAXIMUM DAILY VALUE (2) MASS	b. MAXIMUM 30 DAY VALUE *(if available)* (1) CONCENTRATION	b. MAXIMUM 30 DAY VALUE (2) MASS	c. LONG TERM AVRG. VALUE *(if available)* (1) CONCENTRATION	c. LONG TERM AVRG. VALUE (2) MASS	d. NO. OF ANALYSES	3. UNITS *(specify if blank)* a. CONCENTRATION	3. UNITS b. MASS	4. INTAKE *(optional)* a. LONG TERM AVERAGE VALUE (1) CONCENTRATION	4. INTAKE a. LONG TERM AVERAGE VALUE (2) MASS	b. NO. OF ANALYSES
a. Biochemical Oxygen Demand *(BOD)*	ND	ND	NA	NA	NA	NA	1	ppm	kg/d	NA	NA	NA
b. Chemical Oxygen Demand *(COD)*	ND	ND	NA	NA	NA	NA	1	ppm	kg/d	NA	NA	NA
c. Total Organic Carbon *(TOC)*	3.2	26,162	NA	NA	NA	NA	1	ppm	kg/d	NA	NA	NA
d. Total Suspended Solids *(TSS)*	ND	ND	NA	NA	NA	NA	1	ppm	kg/d	NA	NA	NA
e. Ammonia *(as N)*	0.06	490	NA	NA	NA	NA	1	ppm	kg/d	NA	NA	NA
f. Flow	VALUE 2,708		VALUE 2,708		VALUE *2 160		12	MGD	NA	VALUE NA		NA
g. Temperature *(winter)*	VALUE NA		VALUE NA		VALUE NA		NA	°C		VALUE NA		NA
h. Temperature *(summer)*	VALUE 26.9		VALUE NA		VALUE NA		1	°C		VALUE NA		NA
i. pH	MINIMUM 6.97	MAXIMUM 6.97	MINIMUM NA	MAXIMUM NA			1	STANDARD UNITS				

PART B - Mark "X" in column 2-a for each pollutant you know or have reason to believe is present. Mark "X" in column 2-b for each pollutant you believe to be absent. If you mark column 2a for any pollutant which is limited either directly, or indirectly but expressly, in an effluent limitations guideline, you must provide the results of at least one analysis for that pollutant. For other pollutants for which you mark column 2a, you must provide quantitative data or an explanation of their presence in your discharge. Complete one table for each outfall. See the instructions for additional details and requirements.

1. POLLUTANT AND CAS NO. *(if available)*	2. MARK 'X' a. BELIEVED PRESENT	2. MARK 'X' b. BELIEVED ABSENT	3. EFFLUENT a. MAXIMUM DAILY VALUE (1) CONCENTRATION	a. MAXIMUM DAILY VALUE (2) MASS	b. MAXIMUM 30 DAY VALUE *(if available)* (1) CONCENTRATION	b. MAXIMUM 30 DAY VALUE (2) MASS	c. LONG TERM AVRG. VALUE *(if available)* (1) CONCENTRATION	c. LONG TERM AVRG. VALUE (2) MASS	d. NO. OF ANALYSES	4. UNITS a. CONCENTRATION	4. UNITS b. MASS	5. INTAKE *(optional)* a. LONG TERM AVERAGE VALUE (1) CONCENTRATION	5. INTAKE a. LONG TERM AVERAGE VALUE (2) MASS	b. NO. OF ANALYSES
a. Bromide (24959-67-9)	x		0.28	2,289	NA	NA	NA	NA	1	ppm	kg/d	NA	NA	NA
b. Chlorine, Total Residual		x	ND	NA	NA	NA	NA	NA	1	ppm	kg/d	NA	NA	NA
c. Color		x	NA	NA	NA	NA	NA	NA	NA	color units	NA	NA	NA	NA
d. Fecal Coliform		x	NA	NA	NA	NA	NA	NA	NA	col/100ml	NA	NA	NA	NA
e. Fluoride (16984-48-8)		x	0.039	319	NA	NA	NA	NA	1	ppm	kg/d	NA	NA	NA
f. Nitrate—Nitrite *(as N)*		x	0.15	1,226	NA	NA	NA	NA	1	ppm	kg/d	NA	NA	NA

CONTINUE ON REVERSE

*** Long term average flow (1999) used to calculate all mass values.**

1. POLLUTANT AND CAS NO. (if available)	2. MARK 'X'		3. EFFLUENT							4. UNITS		5. INTAKE (optional)		
	a. BELIEVED PRESENT	b. BELIEVED ABSENT	a. MAXIMUM DAILY VALUE		b. MAXIMUM 30 DAY VALUE (if available)		c. LONG TERM AVRG. VALUE (if available)		d. NO. OF ANALYSES	a. CONCENTRATION	b. MASS	a. LONG TERM AVERAGE VALUE		b. NO. OF ANALYSES
			(1) CONCENTRATION	(2) MASS	(1) CONCENTRATION	(2) MASS	(1) CONCENTRATION	(2) MASS				(1) CONCENTRATION	(2) MASS	
g. Nitrogen, Total Organic (as N)	x		0.92	7,522	NA	NA	NA	NA	1	ppm	kg/d	NA	NA	NA
h. Oil and Grease		x	ND	NA	NA	NA	NA	NA	1	ppm	kg/d	NA	NA	NA
i. Phosphorus (as P), Total (7723-14-0)	x		0.02	163	NA	NA	NA	NA	1	ppm	kg/d	NA	NA	NA
j. Radioactivity														
(1) Alpha, Total	x		1.00	NA	NA	NA	NA	NA	1	pCi/L	NA	NA	NA	NA
(2) Beta, Total	x		2.80	NA	NA	NA	NA	NA	1	pCi/L	NA	NA	NA	NA
(3) Radium, Total		x	NA	NA	NA	NA	NA	NA	NA	NA	NA	NA	NA	NA
(4) Radium 226, Total		x	NA	NA	NA	NA	NA	NA	NA	NA	NA	NA	NA	NA
k. Sulfate (as SO_4) (14808-79-8)	x		5.53	45,211	NA	NA	NA	NA	1	ppm	kg/d	NA	NA	NA
l. Sulfide (as S)	x		0.02	163	NA	NA	NA	NA	1	ppm	kg/d	NA	NA	NA
m. Sulfite (as SO_3) (14265-45-3)		x	NA	NA	NA	NA	NA	NA	NA	ppm	kg/d	NA	NA	NA
n. Surfactants		x	NA	NA	NA	NA	NA	NA	NA	ppm	kg/d	NA	NA	NA
o. Aluminum, Total (7429-90-5)	x		0.252	2,060	NA	NA	NA	NA	1	ppm	kg/d	NA	NA	NA
p. Barium, Total (7440-39-3)	x		0.030	245	NA	NA	NA	NA	1	ppm	kg/d	NA	NA	NA
q. Boron, Total (7440-42-8)	x		0.02	163	NA	NA	NA	NA	1	ppm	kg/d	NA	NA	NA
r. Cobalt, Total (7440-48-4)		x	ND	NA	NA	NA	NA	NA	1	ppm	kg/d	NA	NA	NA
s. Iron, Total (7439-89-6)	x		0.27	2,207	NA	NA	NA	NA	1	ppm	kg/d	NA	NA	NA
t. Magnesium, Total (7439-95-4)	x		1.70	13,898	NA	NA	NA	NA	1	ppm	kg/d	NA	NA	NA
u. Molybdenum, Total (7439-98-7)		x	ND	NA	NA	NA	NA	NA	1	ppm	kg/d	NA	NA	NA
v. Manganese, Total (7439-96-5)	X		0.162	1,324	NA	NA	NA	NA	1	ppm	kg/d	NA	NA	NA
w. Tin, Total (7440-31-5)		x	ND	NA	NA	NA	NA	NA	1	ppm	kg/d	NA	NA	NA
x. Titanium, Total (7440-32-6)	X		0.013	106	NA	NA	NA	NA	1	ppm	kg/d	NA	NA	NA

CONTINUE ON PAGE V-3

NORTH ANNA POWER STATION

EPA I.D. NUMBER (copy from Item 1 of Form 1)	OUTFALL NUMBER
VAD065376279	001

Condenser Cooling Water

CONTINUED FROM PAGE 3 OF FORM 2-C

PART C - If you are a primary industry and this outfall contains process wastewater, refer to Table 2c-2 in the instructions to determine which of the GC/MS fractions you must test for. Mark "X" in column 2-a for all such GC/MS fractions that apply to your industry and for ALL toxic metals, cyanides, and total phenols. If you are not required to mark column 2-a *(secondary industries, nonprocess wastewater outfalls, and nonrequired GC/MS fractions)*, mark "X" in column 2-b for each pollutant you know or have reason to believe is present. Mark "X" in column 2-c for each pollutant you believe is absent. If you mark column 2a for any pollutant, you must provide the results of at least one analysis for that pollutant. If you mark column 2b for any pollutant, you must provide the results of at least one analysis for that pollutant if you know or have reason to believe it will be discharged in concentrations of 10 ppb or greater. If you mark column 2b for acrolein, acrylonitrile, 2,4 dinitrophenol, or 2-methyl-4, 6 dinitrophenol, you must provide the results of at least one analysis for each of these pollutants which you know or have reason to believe that you discharge in concentrations of 100 ppb or greater. Otherwise, for pollutants for which you mark column 2b, you must either submit at least one analysis or briefly describe the reasons the pollutant is expected to be discharged. Note that there are 7 pages to this part; please review each carefully. Complete one table *(all 7 pages)* for each outfall. See instructions for additional details and requirements.

1. POLLUTANT AND CAS NUMBER (if available)	2. MARK 'X'			3. EFFLUENT							4. UNITS		5. INTAKE (optional)		
	a. TESTING REQUIRED	b. BELIEVED PRESENT	c. BELIEVED ABSENT	a. MAXIMUM DAILY VALUE (1) CONCENTRATION	a. MAXIMUM DAILY VALUE (2) MASS	b. MAXIMUM 30 DAY VALUE (if available) (1) CONCENTRATION	b. MAXIMUM 30 DAY VALUE (if available) (2) MASS	c. LONG TERM AVRG. VALUE (if available) (1) CONCENTRATION	c. LONG TERM AVRG. VALUE (if available) (2) MASS	d. NO. OF ANALYSES	a. CONCENTRATION	b. MASS	a. LONG TERM AVERAGE VALUE (1) CONCENTRATION	a. LONG TERM AVERAGE VALUE (2) MASS	b. NO. OF ANALYSES
METALS, CYANIDE, AND TOTAL PHENOLS															
1M. Antimony, Total (7440-36-0)			x	ND	NA	NA	NA	NA	NA	1	ppm	kg/d	NA	NA	NA
2M. Arsenic, Total (7440-38-2)			x	ND	NA	NA	NA	NA	NA	1	ppm	kg/d	NA	NA	NA
3M. Beryllium, Total, 7440-41-7)			x	ND	NA	NA	NA	NA	NA	1	ppm	kg/d	NA	NA	NA
4M. Cadmium, Total (7440-43-9)			x	ND	NA	NA	NA	NA	NA	1	ppm	kg/d	NA	NA	NA
5M. Chromium, Total (7440-47-3)		x		0.002	16.4	NA	NA	NA	NA	1	ppm	kg/d	NA	NA	NA
6M. Copper, Total (7440-50-8)		x		0.004	32.7	NA	NA	NA	NA	1	ppm	kg/d	NA	NA	NA
7M. Lead, Total (7439-92-1)		x		0.001	8.4	NA	NA	NA	NA	1	ppm	kg/d	NA	NA	NA
8M. Mercury, Total (7439-97-6)			x	ND	NA	NA	NA	NA	NA	1	ppm	kg/d	NA	NA	NA
9M. Nickel, Total (7440-02-0)			x	ND	NA	NA	NA	NA	NA	1	ppm	kg/d	NA	NA	NA
10M. Selenium, Total (7782-49-2)			x	ND	NA	NA	NA	NA	NA	1	ppm	kg/d	NA	NA	NA
11M. Silver, Total (7440-22-4)			x	ND	NA	NA	NA	NA	NA	1	ppm	kg/d	NA	NA	NA
12M. Thallium, Total (7440-28-0)			x	ND	NA	NA	NA	NA	NA	1	ppm	kg/d	NA	NA	NA
13M. Zinc, Total (7440-66-6)			x	ND	NA	NA	NA	NA	NA	1	ppm	kg/d	NA	NA	NA
14M. Cyanide, Total (57-12-5)			x	ND	NA	NA	NA	NA	NA	1	ppm	kg/d	NA	NA	NA
15M. Phenols, Total			x	ND	NA	NA	NA	NA	NA	1	ppm	kg/d	NA	NA	NA
DIOXIN															
2,3,7,8 Tetrachlorodibenzo-P-Dioxin (1764-01-6)			x	DESCRIBE RESULTS NA											

CONTINUE ON REVERSE

STF ENV441F 7

VAD065376279 NORTH ANNA POWER STATION OUTFALL 001 Condenser Cooling Water

1. POLLUTANT AND CAS NUMBER (if available)	2. MARK 'X'			3. EFFLUENT							4. UNITS		5. INTAKE (optional)		
	a. TESTING REQUIRED	b. BELIEVED PRESENT	c. BELIEVED ABSENT	a. MAXIMUM DAILY VALUE		b. MAXIMUM 30 DAY VALUE (if available)		c. LONG TERM AVRG. VALUE (if available)		d. NO. OF ANALYSES	a. CONCENTRATION	b. MASS	a. LONG TERM AVERAGE VALUE		b. NO. OF ANALYSES
				(1) CONCENTRATION	(2) MASS	(1) CONCENTRATION	(2) MASS	(1) CONCENTRATION	(2) MASS				(1) CONCENTRATION	(2) MASS	
GC/MS FRACTION — VOLATILE COMPOUNDS															
1V. Acrolein (107-02-8)			x	ND	NA	NA	NA	NA	NA	1	ppm	kg/d	NA	NA	NA
2V. Acrylonitrile (107-13-1)			x	ND	NA	NA	NA	NA	NA	1	ppm	kg/d	NA	NA	NA
3V. Benzene (71-43-2)			x	ND	NA	NA	NA	NA	NA	1	ppm	kg/d	NA	NA	NA
4V. Bis (*Chloromethyl*) Ether (542-88-1)			NA	not	required	not	required	not	required	NA	NA	NA	NA	NA	NA
5V. Bromoform (75-25-2)			x	ND	NA	NA	NA	NA	NA	1	ppm	kg/d	NA	NA	NA
6V. Carbon Tetrachloride (56-23-5)			x	ND	NA	NA	NA	NA	NA	1	ppm	kg/d	NA	NA	NA
7V. Chlorobenzene (108-90-7)			x	ND	NA	NA	NA	NA	NA	1	ppm	kg/d	NA	NA	NA
8V. Chlorodibromomethane (124-48-1)			x	ND	NA	NA	NA	NA	NA	1	ppm	kg/d	NA	NA	NA
9V. Chloroethane (75-00-3)			x	ND	NA	NA	NA	NA	NA	1	ppm	kg/d	NA	NA	NA
10V. 2-Chloroethylvinyl Ether (110-75-8)			x	ND	NA	NA	NA	NA	NA	1	ppm	kg/d	NA	NA	NA
11V. Chloroform (67-66-3)			x	ND	NA	NA	NA	NA	NA	1	ppm	kg/d	NA	NA	NA
12V. Dichlorobromomethane (75-27-4)			x	ND	NA	NA	NA	NA	NA	1	ppm	kg/d	NA	NA	NA
13V. Dichlorodifluoromethane (75-71-8)			NA	not	required	not	required	not	required	NA	NA	NA	NA	NA	NA
14V. 1,1-Dichloroethane (75-34-3)			x	ND	NA	NA	NA	NA	NA	1	ppm	kg/d	NA	NA	NA
15V. 1,2-Dichloroethane (107-06-2)			x	ND	NA	NA	NA	NA	NA	1	ppm	kg/d	NA	NA	NA
16V. 1,1-Dichloroethylene (75-35-4)			x	ND	NA	NA	NA	NA	NA	1	ppm	kg/d	NA	NA	NA
17V. 1,2-Dichloropropane (78-87-5)			x	ND	NA	NA	NA	NA	NA	1	ppm	kg/d	NA	NA	NA
18V. 1,3-Dichloropropylene (542-75-6)			x	ND	NA	NA	NA	NA	NA	1	ppm	kg/d	NA	NA	NA
19V. Ethylbenzene (100-41-4)			x	ND	NA	NA	NA	NA	NA	1	ppm	kg/d	NA	NA	NA
20V. Methyl Bromide (74-83-9)			x	ND	NA	NA	NA	NA	NA	1	ppm	kg/d	NA	NA	NA
21V. Methyl Chloride (74-87-3)			x	ND	NA	NA	NA	NA	NA	1	ppm	kg/d	NA	NA	NA

CONTINUE ON PAGE V-5

NORTH ANNA POWER STATION

EPA I.D. NUMBER (copy from Item 1 of Form 1)	OUTFALL NUMBER
VAD065376279	001

Condenser Cooling Water

CONTINUED FROM PAGE V-4

1. POLLUTANT AND CAS NUMBER (if available)	2. MARK 'X'			3. EFFLUENT							4. UNITS		5. INTAKE (optional)		
	a. TESTING REQUIRED	b. BELIEVED PRESENT	c. BELIEVED ABSENT	a. MAXIMUM DAILY VALUE		b. MAXIMUM 30 DAY VALUE (if available)		c. LONG TERM AVRG. VALUE (if available)		d. NO. OF ANALYSES	a. CONCENTRATION	b. MASS	a. LONG TERM AVERAGE VALUE		b. NO. OF ANALYSES
				(1) CONCENTRATION	(2) MASS	(1) CONCENTRATION	(2) MASS	(1) CONCENTRATION	(2) MASS				(1) CONCENTRATION	(2) MASS	
GC/MS FRACTION — VOLATILE COMPOUNDS *(continued)*															
22V. Methylene Chloride (75-09-2)			x	ND	NA	NA	NA	NA	NA	1	ppm	kg/d	NA	NA	NA
23V. 1,1,2,2-Tetrachloroethane (79-34-5)			x	ND	NA	NA	NA	NA	NA	1	ppm	kg/d	NA	NA	NA
24V. Tetrachloroethylene (127-18-4)			x	ND	NA	NA	NA	NA	NA	1	ppm	kg/d	NA	NA	NA
25V. Toluene (108-88-3)			x	ND	NA	NA	NA	NA	NA	1	ppm	kg/d	NA	NA	NA
26V. 1,2-Trans-Dichloroethylene (156-60-5)			x	ND	NA	NA	NA	NA	NA	1	ppm	kg/d	NA	NA	NA
27V. 1,1,1-Trichloroethane (71-55-6)			x	ND	NA	NA	NA	NA	NA	1	ppm	kg/d	NA	NA	NA
28V. 1;1,2-Trichloroethane (79-00-5)			x	ND	NA	NA	NA	NA	NA	1	ppm	kg/d	NA	NA	NA
29V. Trichloroethylene (79-01-6)			x	ND	NA	NA	NA	NA	NA	1	ppm	kg/d	NA	NA	NA
30V. Trichlorofluoromethane (75-69-4)			NA	not	required	not	required	not	required	NA	NA	NA	NA	NA	NA
31V. Vinyl Chloride (75-01-4)			x	ND	NA	NA	NA	NA	NA	1	ppm	kg/d	NA	NA	NA
GC/MS FRACTION — ACID COMPOUNDS															
1A. 2-Chlorophenol (95-57-8)			x	ND	NA	NA	NA	NA	NA	1	ppm	kg/d	NA	NA	NA
2A. 2,4-Dichlorophenol (120-83-2)			x	ND	NA	NA	NA	NA	NA	1	ppm	kg/d	NA	NA	NA
3A. 2,4-Dimethylphenol (105-67-9)			x	ND	NA	NA	NA	NA	NA	1	ppm	kg/d	NA	NA	NA
4A. 4,6-Dinitro-O-Cresol (534-52-1)			x	ND	NA	NA	NA	NA	NA	1	ppm	kg/d	NA	NA	NA
5A. 2,4-Dinitrophenol (51-28-5)			x	ND	NA	NA	NA	NA	NA	1	ppm	kg/d	NA	NA	NA
6A. 2-Nitrophenol (88-75-5)			x	ND	NA	NA	NA	NA	NA	1	ppm	kg/d	NA	NA	NA
7A. 4-Nitrophenol (100-02-7)			x	ND	NA	NA	NA	NA	NA	1	ppm	kg/d	NA	NA	NA
8A. P-Chloro-M-Cresol (59-50-7)			x	ND	NA	NA	NA	NA	NA	1	ppm	kg/d	NA	NA	NA
9A. Pentachlorophenol (87-86-5)			x	ND	NA	NA	NA	NA	NA	1	ppm	kg/d	NA	NA	NA
10A. Phenol (108-95-2)			x	ND	NA	NA	NA	NA	NA	1	ppm	kg/d	NA	NA	NA
11A. 2,4,6-Trichlorophenol (88-06-2)			x	ND	NA	NA	NA	NA	NA	1	ppm	kg/d	NA	NA	NA

CONTINUE ON REVERSE

CONTINUED FROM THE FRONT

VAD065376279 NORTH ANNA POWER STATION OUTFALL 001 Condenser Cooling Water

1. POLLUTANT AND CAS NUMBER (if available)	2. MARK 'X' a. TESTING REQUIRED	b. BELIEVED PRESENT	c. BELIEVED ABSENT	3. EFFLUENT a. MAXIMUM DAILY VALUE (1) CONCENTRATION	(2) MASS	b. MAXIMUM 30 DAY VALUE (if available) (1) CONCENTRATION	(2) MASS	c. LONG TERM AVRG. VALUE (if available) (1) CONCENTRATION	(2) MASS	d. NO. OF ANALYSES	4. UNITS a. CONCENTRATION	b. MASS	5. INTAKE (optional) a. LONG TERM AVERAGE VALUE (1) CONCENTRATION	(2) MASS	b. NO. OF ANALYSES
GC/MS FRACTION — BASE/NEUTRAL COMPOUNDS															
1B. Acenaphthene (83-32-9)			x	ND	NA	NA	NA	NA	NA	1	ppm	kg/d	NA	NA	NA
2B. Acenaphtylene (208-96-8)			x	ND	NA	NA	NA	NA	NA	1	ppm	kg/d	NA	NA	NA
3B. Anthracene (120-12-7)			x	ND	NA	NA	NA	NA	NA	1	ppm	kg/d	NA	NA	NA
4B. Benzidine (92-87-5)			x	ND	NA	NA	NA	NA	NA	1	ppm	kg/d	NA	NA	NA
5B. Benzo *(a)* Anthracene (56-55-3)			x	ND	NA	NA	NA	NA	NA	1	ppm	kg/d	NA	NA	NA
6B. Benzo *(a)* Pyrene (50-32-8)			x	ND	NA	NA	NA	NA	NA	1	ppm	kg/d	NA	NA	NA
7B. 3,4-Benzo-fluoranthene (205-99-2)			x	ND	NA	NA	NA	NA	NA	1	ppm	kg/d	NA	NA	NA
8B. Benzo *(ghi)* Perylene (191-24-2)			x	ND	NA	NA	NA	NA	NA	1	ppm	kg/d	NA	NA	NA
9B. Benzo *(k)* Fluoranthene (207-08-9)			x	ND	NA	NA	NA	NA	NA	1	ppm	kg/d	NA	NA	NA
10B. Bis *(2-Chloro-ethoxy)* Methane (111-91-1)			x	ND	NA	NA	NA	NA	NA	1	ppm	kg/d	NA	NA	NA
11B. Bis *(2-Chloro-ethyl)* Ether (111-44-4)			x	ND	NA	NA	NA	NA	NA	1	ppm	kg/d	NA	NA	NA
12B. Bis *(2-Chloroiso-propyl)* Ether (102-60-1)			x	ND	NA	NA	NA	NA	NA	1	ppm	kg/d	NA	NA	NA
13B. Bis *(2-Ethyl-hexyl)* Phthalate (117-81-7)			x	ND	NA	NA	NA	NA	NA	1	ppm	kg/d	NA	NA	NA
14B. 4-Bromo-phenyl Phenyl Ether (101-55-3)			x	ND	NA	NA	NA	NA	NA	1	ppm	kg/d	NA	NA	NA
15B. Butyl Benzyl Phthalate (85-68-7)			x	ND	NA	NA	NA	NA	NA	1	ppm	kg/d	NA	NA	NA
16B. 2-Chloro-naphthalene (91-58-7)			x	ND	NA	NA	NA	NA	NA	1	ppm	kg/d	NA	NA	NA
17B. 4-Chloro-phenyl Phenyl Ether (7005-72-3)			x	ND	NA	NA	NA	NA	NA	1	ppm	kg/d	NA	NA	NA
18B. Chrysene (218-01-9)			x	ND	NA	NA	NA	NA	NA	1	ppm	kg/d	NA	NA	NA
19B. Dibenzo *(a, h)* Anthracene (53-70-3)			x	ND	NA	NA	NA	NA	NA	1	ppm	kg/d	NA	NA	NA
20B. 1,2-Dichloro-benzene (95-50-1)			x	ND	NA	NA	NA	NA	NA	1	ppm	kg/d	NA	NA	NA
21B. 1,3-Dichloro-benzene (541-73-1)			x	ND	NA	NA	NA	NA	NA	1	ppm	kg/d	NA	NA	NA

CONTINUE ON PAGE V-7

NORTH ANNA POWER STATION

EPA I.D. NUMBER (copy from Item 1 of Form 1)	OUTFALL NUMBER
VAD065376279	001

Condenser Cooling Water

CONTINUED FROM PAGE V-6

1. POLLUTANT AND CAS NUMBER (if available)	2. MARK 'X'			3. EFFLUENT							4. UNITS		5. INTAKE (optional)		
	a. TESTING REQUIRED	b. BELIEVED PRESENT	c. BELIEVED ABSENT	a. MAXIMUM DAILY VALUE		b. MAXIMUM 30 DAY VALUE (if available)		c. LONG TERM AVRG. VALUE (if available)		d. NO. OF ANALYSES	a. CONCENTRATION	b. MASS	a. LONG TERM AVERAGE VALUE		b. NO. OF ANALYSES
				(1) CONCENTRATION	(2) MASS	(1) CONCENTRATION	(2) MASS	(1) CONCENTRATION	(2) MASS				(1) CONCENTRATION	(2) MASS	
GC/MS FRACTION — BASE/NEUTRAL COMPOUNDS *(continued)*															
22B. 1,4-Dichlorobenzene (106-46-7)			x	ND	NA	NA	NA	NA	NA	1	ppm	kg/d	NA	NA	NA
23B. 3,3'-Dichlorobenzidine (91-94-1)			x	ND	NA	NA	NA	NA	NA	1	ppm	kg/d	NA	NA	NA
24B. Diethyl Phthalate (84-66-2)			x	ND	NA	NA	NA	NA	NA	1	ppm	kg/d	NA	NA	NA
25B. Dimethyl Phthalate (131-11-3)			x	ND	NA	NA	NA	NA	NA	1	ppm	kg/d	NA	NA	NA
26B. Di-N-Butyl Phthalate (84-74-2)			x	ND	NA	NA	NA	NA	NA	1	ppm	kg/d	NA	NA	NA
27B. 2,4-Dinitrotoluene (121-14-2)			x	ND	NA	NA	NA	NA	NA	1	ppm	kg/d	NA	NA	NA
28B. 2,6-Dinitrotoluene (606-20-2)			x	ND	NA	NA	NA	NA	NA	1	ppm	kg/d	NA	NA	NA
29B. Di-N-Octyl Phthalate (117-84-0)			x	ND	NA	NA	NA	NA	NA	1	ppm	kg/d	NA	NA	NA
30B. 1,2-Diphenylhydrazine *(as Azobenzene)* (122-66-7)			x	ND	NA	NA	NA	NA	NA	1	ppm	kg/d	NA	NA	NA
31B. Fluoranthene (206-44-0)			x	ND	NA	NA	NA	NA	NA	1	ppm	kg/d	NA	NA	NA
32B. Fluorene (86-73-7)			x	ND	NA	NA	NA	NA	NA	1	ppm	kg/d	NA	NA	NA
33B. Hexachlorobenzene (118-74-1)			x	ND	NA	NA	NA	NA	NA	1	ppm	kg/d	NA	NA	NA
34B. Hexachlorobutadiene (87-68-3)			x	ND	NA	NA	NA	NA	NA	1	ppm	kg/d	NA	NA	NA
35B. Hexachlorocyclopentadiene (77-47-4)			x	ND	NA	NA	NA	NA	NA	1	ppm	kg/d	NA	NA	NA
36B. Hexachloroethane (67-72-1)			x	ND	NA	NA	NA	NA	NA	1	ppm	kg/d	NA	NA	NA
37B. Indeno *(1,2,3-cd)* Pyrene (193-39-5)			x	ND	NA	NA	NA	NA	NA	1	ppm	kg/d	NA	NA	NA
38B. Isophorone (78-59-1)			x	ND	NA	NA	NA	NA	NA	1	ppm	kg/d	NA	NA	NA
39B. Naphthalene (91-20-3)			x	ND	NA	NA	NA	NA	NA	1	ppm	kg/d	NA	NA	NA
40B. Nitrobenzene (98-95-3)			x	ND	NA	NA	NA	NA	NA	1	ppm	kg/d	NA	NA	NA
41B. N-Nitrosodimethylamine (62-75-9)			x	ND	NA	NA	NA	NA	NA	1	ppm	kg/d	NA	NA	NA
42B. N-Nitrosodi-N-Propylamine (621-64-7)			x	ND	NA	NA	NA	NA	NA	1	ppm	kg/d	NA	NA	NA

CONTINUE ON REVERSE

1. POLLUTANT AND CAS NUMBER (if available)	2. MARK 'X'			3. EFFLUENT							4. UNITS		5. INTAKE (optional)		
	a. TESTING REQUIRED	b. BELIEVED PRESENT	c. BELIEVED ABSENT	a. MAXIMUM DAILY VALUE		b. MAXIMUM 30 DAY VALUE (if available)		c. LONG TERM AVRG. VALUE (if available)		d. NO. OF ANALYSES	a. CONCENTRATION	b. MASS	a. LONG TERM AVERAGE VALUE		b. NO. OF ANALYSES
				(1) CONCENTRATION	(2) MASS	(1) CONCENTRATION	(2) MASS	(1) CONCENTRATION	(2) MASS				(1) CONCENTRATION	(2) MASS	
GC/MS FRACTION — BASE/NEUTRAL COMPOUNDS *(continued)*															
43B. N-Nitrosodiphenylamine (86-30-6)			x	ND	NA	NA	NA	NA	NA	1	ppm	kg/d	NA	NA	NA
44B. Phenanthrene (85-01-8)			x	ND	NA	NA	NA	NA	NA	1	ppm	kg/d	NA	NA	NA
45B. Pyrene (129-00-0)			x	ND	NA	NA	NA	NA	NA	1		kg/d	NA	NA	NA
46B. 1,2,4-Trichlorobenzene (120-82-1)			x	ND	NA	NA	NA	NA	NA	1	ppm	kg/d	NA	NA	NA
GC/MS FRACTION — PESTICIDES															
1P. Aldrin (309-00-2)			x	ND	NA	NA	NA	NA	NA	1	ppm	kg/d	NA	NA	NA
2P. α-BHC (319-84-6)			x	ND	NA	NA	NA	NA	NA	1	ppm	kg/d	NA	NA	NA
3P. β-BHC (319-85-7)			x	ND	NA	NA	NA	NA	NA	1	ppm	kg/d	NA	NA	NA
4P. γ-BHC (58-89-9)			x	ND	NA	NA	NA	NA	NA	1	ppm	kg/d	NA	NA	NA
5P. δ-BHC (319-86-8)			x	ND	NA	NA	NA	NA	NA	1	ppm	kg/d	NA	NA	NA
6P. Chlordane (57-74-9)			x	ND	NA	NA	NA	NA	NA	1	ppm	kg/d	NA	NA	NA
7P. 4,4'-DDT (50-29-3)			x	ND	NA	NA	NA	NA	NA	1	ppm	kg/d	NA	NA	NA
8P. 4,4'-DDE (72-55-9)			x	ND	NA	NA	NA	NA	NA	1	ppm	kg/d	NA	NA	NA
9P. 4,4'-DDD (72-54-8)			x	ND	NA	NA	NA	NA	NA	1	ppm	kg/d	NA	NA	NA
10P. Dieldrin (60-57-1)			x	ND	NA	NA	NA	NA	NA	1	ppm	kg/d	NA	NA	NA
11P. α-Endosulfan (115-29-7)			x	ND	NA	NA	NA	NA	NA	1	ppm	kg/d	NA	NA	NA
12P. β-Endosulfan (115-29-7)			x	ND	NA	NA	NA	NA	NA	1	ppm	kg/d	NA	NA	NA
13P. Endosulfan Sulfate (1031-07-8)			x	ND	NA	NA	NA	NA	NA	1	ppm	kg/d	NA	NA	NA
14P. Endrin (72-20-8)			x	ND	NA	NA	NA	NA	NA	1	ppm	kg/d	NA	NA	NA
15P. Endrin Aldehyde (7421-93-4)			x	ND	NA	NA	NA	NA	NA	1	ppm	kg/d	NA	NA	NA
16P. Heptachlor (76-44-8)			x	ND	NA	NA	NA	NA	NA	1	ppm	kg/d	NA	NA	NA

CONTINUE ON PAGE V-9

NORTH ANNA POWER STATION

EPA I.D. NUMBER (copy from Item 1 of Form 1)	OUTFALL NUMBER
VAD065376279	001

CONTINUED FROM PAGE V-8

Condenser Cooling Water

1. POLLUTANT AND CAS NUMBER (if available)	2. MARK 'X'			3. EFFLUENT							4. UNITS		5. INTAKE (optional)		
	a. TESTING REQUIRED	b. BELIEVED PRESENT	c. BELIEVED ABSENT	a. MAXIMUM DAILY VALUE		b. MAXIMUM 30 DAY VALUE (if available)		c. LONG TERM AVRG. VALUE (if available)		d. NO. OF ANALYSES	a. CONCENTRATION	b. MASS	a. LONG TERM AVERAGE VALUE		b. NO. OF ANALYSES
				(1) CONCENTRATION	(2) MASS	(1) CONCENTRATION	(2) MASS	(1) CONCENTRATION	(2) MASS				(1) CONCENTRATION	(2) MASS	
GC/MS FRACTION — PESTICIDES *(continued)*															
17P. Heptachlor Epoxide (1024-57-3)			x	ND	NA	NA	NA	NA	NA	1	ppm	kg/d	NA	NA	NA
18P. PCB-1242 (53469-21-9)			x	ND	NA	NA	NA	NA	NA	1	ppm	kg/d	NA	NA	NA
19P. PCB-1254 (11097-69-1)			x	ND	NA	NA	NA	NA	NA	1	ppm	kg/d	NA	NA	NA
20P. PCB-1221 (11104-28-2)			x	ND	NA	NA	NA	NA	NA	1	ppm	kg/d	NA	NA	NA
21P. PCB-1232 (11141-16-5)			x	ND	NA	NA	NA	NA	NA	1	ppm	kg/d	NA	NA	NA
22P. PCB-1248 (12672-29-6)			x	ND	NA	NA	NA	NA	NA	1	ppm	kg/d	NA	NA	NA
23P. PCB-1260 (11096-82-5)			x	ND	NA	NA	NA	NA	NA	1	ppm	kg/d	NA	NA	NA
24P. PCB-1016 (12674-11-2)			x	ND	NA	NA	NA	NA	NA	1	ppm	kg/d	NA	NA	NA
25P. Toxaphene (8001-35-2)			x	ND	NA	NA	NA	NA	NA	1	ppm	kg/d	NA	NA	NA

PLEASE PRINT OR TYPE IN THE UNSHADED AREAS ONLY. You may report some or all of this information on separate sheets *(use the same format)* instead of completing these pages. SEE INSTRUCTIONS.

NORTH ANNA POWER STATION

EPA I.D. NUMBER *(copy from Item 1 of Form 1)*

VAD065376279

Settling Pond

V. INTAKE AND EFFLUENT CHARACTERISTICS *(continued from page 3 of Form 2-C)*

SEE ADDENDUM FOR MORE INFO.

OUTFALL NO. 009

PART A - You must provide the results of at least one analysis for every pollutant in this table. Complete one table for each outfall. See instructions for additional details.

1. POLLUTANT	2. EFFLUENT a. MAXIMUM DAILY VALUE (1) CONCENTRATION	a. MAXIMUM DAILY VALUE (2) MASS	b. MAXIMUM 30 DAY VALUE *(if available)* (1) CONCENTRATION	b. MAXIMUM 30 DAY VALUE (2) MASS	c. LONG TERM AVRG. VALUE *(if available)* (1) CONCENTRATION	c. LONG TERM AVRG. VALUE (2) MASS	d. NO. OF ANALYSES	3. UNITS *(specify if blank)* a. CONCENTRATION	3. UNITS b. MASS	4. INTAKE *(optional)* a. LONG TERM AVERAGE VALUE (1) CONCENTRATION	4. INTAKE a. LONG TERM AVERAGE VALUE (2) MASS	b. NO. OF ANALYSES
a. Biochemical Oxygen Demand *(BOD)*	2.36	1.8	NA	NA	NA	NA	1	ppm	kg/d	NA	NA	NA
b. Chemical Oxygen Demand *(COD)*	ND	NA	NA	NA	NA	NA	1	ppm	kg/d	NA	NA	NA
c. Total Organic Carbon *(TOC)*	4.2	3.1	NA	NA	NA	NA	1	ppm	kg/d	NA	NA	NA
d. Total Suspended Solids *(TSS)*	7.3	5.5	5.5	4.1	<2.5	<1.9	24	ppm	kg/d	NA	NA	NA
e. Ammonia *(as N)*	0.05	.04	NA	NA	NA	NA	1	ppm	kg/d	NA	NA	NA
f. Flow	VALUE 0.216		VALUE 0.216		VALUE * 0.198		12	MGD	NA	VALUE NA		NA
g. Temperature *(winter)*	VALUE NA		VALUE NA		VALUE NA		NA	°C		VALUE NA		NA
h. Temperature *(summer)*	VALUE 25.2		VALUE NA		VALUE NA		1	°C		VALUE NA		NA
i. pH	MINIMUM 6.75	MAXIMUM 8.3	MINIMUM 6.75	MAXIMUM 8.3			25	STANDARD UNITS				

PART B - Mark "X" in column 2-a for each pollutant you know or have reason to believe is present. Mark "X" in column 2-b for each pollutant you believe to be absent. If you mark column 2a for any pollutant which is limited either directly, or indirectly but expressly, in an effluent limitations guideline, you must provide the results of at least one analysis for that pollutant. For other pollutants for which you mark column 2a, you must provide quantitative data or an explanation of their presence in your discharge. Complete one table for each outfall. See the instructions for additional details and requirements.

1. POLLUTANT AND CAS NO. *(if available)*	2. MARK 'X' a. BELIEVED PRESENT	2. MARK 'X' b. BELIEVED ABSENT	3. EFFLUENT a. MAXIMUM DAILY VALUE (1) CONCENTRATION	a. MAXIMUM DAILY VALUE (2) MASS	b. MAXIMUM 30 DAY VALUE *(if available)* (1) CONCENTRATION	b. MAXIMUM 30 DAY VALUE (2) MASS	c. LONG TERM AVRG. VALUE *(if available)* (1) CONCENTRATION	c. LONG TERM AVRG. VALUE (2) MASS	d. NO. OF ANALYSES	4. UNITS a. CONCENTRATION	4. UNITS b. MASS	5. INTAKE *(optional)* a. LONG TERM AVERAGE VALUE (1) CONCENTRATION	5. INTAKE a. LONG TERM AVERAGE VALUE (2) MASS	b. NO. OF ANALYSES
a. Bromide (24959-67-9)	X		1.17	0.9	NA	NA	NA	NA	1	ppm	kg/d	NA	NA	NA
b. Chlorine, Total Residual		x	ND	NA	NA	NA	NA	NA	1	ppm	kg/d	NA	NA	NA
c. Color	X		40	NA	NA	NA	NA	NA	1	color units	NA	NA	NA	NA
d. Fecal Coliform		X	NA	NA	NA	NA	NA	NA	NA	col/100ml	NA	NA	NA	NA
e. Fluoride (16984-48-8)	X		0.80	0.6	NA	NA	NA	NA	1	ppm	kg/d	NA	NA	NA
f. Nitrate—Nitrite *(as N)*		x	ND	NA	NA	NA	NA	NA	1	ppm	kg/d	NA	NA	NA

*** Long term average flow (1999) used to calculate all mass values.**

ITEM V-B CONTINUED FROM FRONT

VAD065376279 NORTH ANNA POWER STATION **OUTFALL 009** **Settling Pond**

1. POLLUTANT AND CAS NO. (if available)	2. MARK 'X'		3. EFFLUENT							4. UNITS		5. INTAKE (optional)		
	a. BELIEVED PRESENT	b. BELIEVED ABSENT	a. MAXIMUM DAILY VALUE		b. MAXIMUM 30 DAY VALUE (if available)		c. LONG TERM AVRG. VALUE (if available)		d. NO. OF ANALYSES	a. CONCENTRATION	b. MASS	a. LONG TERM AVERAGE VALUE		b. NO. OF ANALYSES
			(1) CONCENTRATION	(2) MASS	(1) CONCENTRATION	(2) MASS	(1) CONCENTRATION	(2) MASS				(1) CONCENTRATION	(2) MASS	
g. Nitrogen, Total Organic (as N)	x		1.00	0.7	NA	NA	NA	NA	1	ppm	kg/d	NA	NA	NA
h. Oil and Grease		x	ND	NA	NA	NA	NA	NA	1	ppm	kg/d	NA	NA	NA
i. Phosphorus (as P), Total (7723-14-0)	x		0.07	0.05	NA	NA	NA	NA	1	ppm	kg/d	NA	NA	NA
j. Radioactivity														
(1) Alpha, Total	x		1.50	NA	NA	NA	NA	NA	1	pCi/L	NA	NA	NA	NA
(2) Beta, Total	x		2.70	NA	NA	NA	NA	NA	1	pCi/L	NA	NA	NA	NA
(3) Radium, Total		x	NA	NA	NA	NA	NA	NA	NA	NA	NA	NA	NA	NA
(4) Radium 226, Total		x	NA	NA	NA	NA	NA	NA	NA	NA	NA	NA	NA	NA
k. Sulfate (as SO_4) (14808-79-8)	x		6.36	4.8	NA	NA	NA	NA	1	ppm	kg/d	NA	NA	NA
l. Sulfide (as S)		x	ND	NA	NA	NA	NA	NA	1	ppm	kg/d	NA	NA	NA
m. Sulfite (as SO_3) (14265-45-3)		x	NA	NA	NA	NA	NA	NA	NA	ppm	kg/d	NA	NA	NA
n. Surfactants		x	ND	NA	NA	NA	NA	NA	1	ppm	kg/d	NA	NA	NA
o. Aluminum, Total (7429-90-5)	x		0.048	0.04	NA	NA	NA	NA	1	ppm	kg/d	NA	NA	NA
p. Barium, Total (7440-39-3)	x		0.081	0.06	NA	NA	NA	NA	1	ppm	kg/d	NA	NA	NA
q. Boron, Total (7440-42-8)	x		0.03	0.02	NA	NA	NA	NA	1	ppm	kg/d	NA	NA	NA
r. Cobalt, Total (7440-48-4)		x	ND	NA	NA	NA	NA	NA	1	ppm	kg/d	NA	NA	NA
s. Iron, Total (7439-89-6)	x		0.76	0.6	NA	NA	NA	NA	1	ppm	kg/d	NA	NA	NA
t. Magnesium, Total (7439-95-4)	x		4.49	3.4	NA	NA	NA	NA	1	ppm	kg/d	NA	NA	NA
u. Molybdenum, Total (7439-98-7)		x	ND	NA	NA	NA	NA	NA	1	ppm	kg/d	NA	NA	NA
v. Manganese, Total (7439-96-5)	x		0.261	0.2	NA	NA	NA	NA	1	ppm	kg/d	NA	NA	NA
w. Tin, Total (7440-31-5)		x	ND	NA	NA	NA	NA	NA	1	ppm	kg/d	NA	NA	NA
x. Titanium, Total (7440-32-6)		x	ND	NA	NA	NA	NA	NA	1	ppm	kg/d	NA	NA	NA

CONTINUE ON PAGE V-3

NORTH ANNA POWER STATION

EPA I.D. NUMBER (copy from Item 1 of Form 1)	OUTFALL NUMBER
VAD065376279	009

Settling Pond

CONTINUED FROM PAGE 3 OF FORM 2-C

PART C - If you are a primary industry and this outfall contains process wastewater, refer to Table 2c-2 in the instructions to determine which of the GC/MS fractions you must test for. Mark "X" in column 2-a for all such GC/MS fractions that apply to your industry and for ALL toxic metals, cyanides, and total phenols. If you are not required to mark column 2-a *(secondary industries, nonprocess wastewater outfalls, and nonrequired GC/MS fractions)*, mark "X" in column 2-b for each pollutant you know or have reason to believe is present. Mark "X" in column 2-c for each pollutant you believe is absent. If you mark column 2a for any pollutant, you must provide the results of at least one analysis for that pollutant. If you mark column 2b for any pollutant, you must provide the results of at least one analysis for that pollutant if you know or have reason to believe it will be discharged in concentrations of 10 ppb or greater. If you mark column 2b for acrolein, acrylonitrile, 2,4 dinitrophenol, or 2-methyl-4, 6 dinitrophenol, you must provide the results of at least one analysis for each of these pollutants which you know or have reason to believe that you discharge in concentrations of 100 ppb or greater. Otherwise, for pollutants for which you mark column 2b, you must either submit at least one analysis or briefly describe the reasons the pollutant is expected to be discharged. Note that there are 7 pages to this part; please review each carefully. Complete one table *(all 7 pages)* for each outfall. See instructions for additional details and requirements.

1. POLLUTANT AND CAS NUMBER (if available)	2. MARK 'X'			3. EFFLUENT							4. UNITS		5. INTAKE (optional)		
	a. TESTING REQUIRED	b. BELIEVED PRESENT	c. BELIEVED ABSENT	a. MAXIMUM DAILY VALUE		b. MAXIMUM 30 DAY VALUE (if available)		c. LONG TERM AVRG. VALUE (if available)		d. NO. OF ANALYSES	a. CONCENTRATION	b. MASS	a. LONG TERM AVERAGE VALUE		b. NO. OF ANALYSES
				(1) CONCENTRATION	(2) MASS	(1) CONCENTRATION	(2) MASS	(1) CONCENTRATION	(2) MASS				(1) CONCENTRATION	(2) MASS	
METALS, CYANIDE, AND TOTAL PHENOLS															
1M. Antimony, Total (7440-36-0)			x	ND	NA	NA	NA	NA	NA	1	ppm	kg/d	NA	NA	NA
2M. Arsenic, Total (7440-38-2)			x	ND	NA	NA	NA	NA	NA	1	ppm	kg/d	NA	NA	NA
3M. Beryllium, Total, 7440-41-7)			x	ND	NA	NA	NA	NA	NA	1	ppm	kg/d	NA	NA	NA
4M. Cadmium, Total (7440-43-9)			x	ND	NA	NA	NA	NA	NA	1	ppm	kg/d	NA	NA	NA
5M. Chromium, Total (7440-47-3)			x	ND	NA	NA	NA	NA	NA	1	ppm	kg/d	NA	NA	NA
6M. Copper, Total (7440-50-8)		x		0.002	0.001	NA	NA	NA	NA	1	ppm	kg/d	NA	NA	NA
7M. Lead, Total (7439-92-1)		x		0.002	0.001	NA	NA	NA	NA	1	ppm	kg/d	NA	NA	NA
8M. Mercury, Total (7439-97-6)			x	ND	NA	NA	NA	NA	NA	1	ppm	kg/d	NA	NA	NA
9M. Nickel, Total (7440-02-0)			x	ND	NA	NA	NA	NA	NA	1	ppm	kg/d	NA	NA	NA
10M. Selenium, Total (7782-49-2)			x	ND	NA	NA	NA	NA	NA	1	ppm	kg/d	NA	NA	NA
11M. Silver, Total (7440-22-4)			x	ND	NA	NA	NA	NA	NA	1	ppm	kg/d	NA	NA	NA
12M. Thallium, Total (7440-28-0)			x	ND	NA	NA	NA	NA	NA	1	ppm	kg/d	NA	NA	NA
13M. Zinc, Total (7440-66-6)			x	ND	NA	NA	NA	NA	NA	1	ppm	kg/d	NA	NA	NA
14M. Cyanide, Total (57-12-5)			x	ND	NA	NA	NA	NA	NA	1	ppm	kg/d	NA	NA	NA
15M. Phenols, Total			x	0.23	0.17	NA	NA	NA	NA	1	ppm	kg/d	NA	NA	NA
DIOXIN															
2,3,7,8 Tetrachlorodibenzo-P-Dioxin (1764-01-6)			x	DESCRIBE RESULTS NA											

VAD065376279 NORTH ANNA POWER STATION OUTFALL 009 Settling Pond

1. POLLUTANT AND CAS NUMBER (if available)	2. MARK 'X' a. TESTING REQUIRED	b. BELIEVED PRESENT	c. BELIEVED ABSENT	3. EFFLUENT a. MAXIMUM DAILY VALUE (1) CONCENTRATION	(2) MASS	b. MAXIMUM 30 DAY VALUE (if available) (1) CONCENTRATION	(2) MASS	c. LONG TERM AVRG. VALUE (if available) (1) CONCENTRATION	(2) MASS	d. NO. OF ANALYSES	4. UNITS a. CONCENTRATION	b. MASS	5. INTAKE (optional) a. LONG TERM AVERAGE VALUE (1) CONCENTRATION	(2) MASS	b. NO. OF ANALYSES
GC/MS FRACTION — VOLATILE COMPOUNDS															
1V. Acrolein (107-02-8)			x	ND	NA	NA	NA	NA	NA	1	ppm	kg/d	NA	NA	NA
2V. Acrylonitrile (107-13-1)			x	ND	NA	NA	NA	NA	NA	1	ppm	kg/d	NA	NA	NA
3V. Benzene (71-43-2)			x	ND	NA	NA	NA	NA	NA	1	ppm	kg/d	NA	NA	NA
4V. Bis (*Chloromethyl*) Ether (542-88-1)			NA	not	required	not	required	not	required	NA	NA	NA	NA	NA	NA
5V. Bromoform (75-25-2)			x	ND	NA	NA	NA	NA	NA	1	ppm	kg/d	NA	NA	NA
6V. Carbon Tetrachloride (56-23-5)			x	ND	NA	NA	NA	NA	NA	1	ppm	kg/d	NA	NA	NA
7V. Chlorobenzene (108-90-7)			x	ND	NA	NA	NA	NA	NA	1	ppm	kg/d	NA	NA	NA
8V. Chlorodibromomethane (124-48-1)			x	ND	NA	NA	NA	NA	NA	1	ppm	kg/d	NA	NA	NA
9V. Chloroethane (75-00-3)			x	ND	NA	NA	NA	NA	NA	1	ppm	kg/d	NA	NA	NA
10V. 2-Chloroethylvinyl Ether (110-75-8)			x	ND	NA	NA	NA	NA	NA	1	ppm	kg/d	NA	NA	NA
11V. Chloroform (67-66-3)			x	ND	NA	NA	NA	NA	NA	1	ppm	kg/d	NA	NA	NA
12V. Dichlorobromomethane (75-27-4)			x	ND	NA	NA	NA	NA	NA	1	ppm	kg/d	NA	NA	NA
13V. Dichlorodifluoromethane (75-71-8)			NA	not	required	not	required	not	required	NA	NA	NA	NA	NA	NA
14V. 1,1-Dichloroethane (75-34-3)			x	ND	NA	NA	NA	NA	NA	1	ppm	kg/d	NA	NA	NA
15V. 1,2-Dichloroethane (107-06-2)			x	ND	NA	NA	NA	NA	NA	1	ppm	kg/d	NA	NA	NA
16V. 1,1-Dichloroethylene (75-35-4)			x	ND	NA	NA	NA	NA	NA	1	ppm	kg/d	NA	NA	NA
17V. 1,2-Dichloropropane (78-87-5)			x	ND	NA	NA	NA	NA	NA	1	ppm	kg/d	NA	NA	NA
18V. 1,3-Dichloropropylene (542-75-6)			x	ND	NA	NA	NA	NA	NA	1	ppm	kg/d	NA	NA	NA
19V. Ethylbenzene (100-41-4)			x	ND	NA	NA	NA	NA	NA	1	ppm	kg/d	NA	NA	NA
20V. Methyl Bromide (74-83-9)			x	ND	NA	NA	NA	NA	NA	1	ppm	kg/d	NA	NA	NA
21V. Methyl Chloride (74-87-3)			x	ND	NA	NA	NA	NA	NA	1	ppm	kg/d	NA	NA	NA

CONTINUE ON PAGE V-5

NORTH ANNA POWER STATION

EPA I.D. NUMBER (copy from Item 1 of Form 1)	OUTFALL NUMBER
VAD065376279	009

Settling Pond

CONTINUED FROM PAGE V-4

1. POLLUTANT AND CAS NUMBER (if available)	2. MARK 'X'			3. EFFLUENT							4. UNITS		5. INTAKE (optional)		
	a. TESTING REQUIRED	b. BELIEVED PRESENT	c. BELIEVED ABSENT	a. MAXIMUM DAILY VALUE		b. MAXIMUM 30 DAY VALUE (if available)		c. LONG TERM AVRG. VALUE (if available)		d. NO. OF ANALYSES	a. CONCENTRATION	b. MASS	a. LONG TERM AVERAGE VALUE		b. NO. OF ANALYSES
				(1) CONCENTRATION	(2) MASS	(1) CONCENTRATION	(2) MASS	(1) CONCENTRATION	(2) MASS				(1) CONCENTRATION	(2) MASS	
GC/MS FRACTION — VOLATILE COMPOUNDS *(continued)*															
22V. Methylene Chloride (75-09-2)			x	ND	NA	NA	NA	NA	NA	1	ppm	kg/d	NA	NA	NA
23V. 1,1,2,2-Tetrachloroethane (79-34-5)			x	ND	NA	NA	NA	NA	NA	1	ppm	kg/d	NA	NA	NA
24V. Tetrachloroethylene (127-18-4)			x	ND	NA	NA	NA	NA	NA	1	ppm	kg/d	NA	NA	NA
25V. Toluene (108-88-3)			x	ND	NA	NA	NA	NA	NA	1	ppm	kg/d	NA	NA	NA
26V. 1,2-Trans-Dichloroethylene (156-60-5)			x	ND	NA	NA	NA	NA	NA	1	ppm	kg/d	NA	NA	NA
27V. 1,1,1-Trichloroethane (71-55-6)			x	ND	NA	NA	NA	NA	NA	1	ppm	kg/d	NA	NA	NA
28V. 1,1,2-Trichloroethane (79-00-5)			x	ND	NA	NA	NA	NA	NA	1	ppm	kg/d	NA	NA	NA
29V. Trichloroethylene (79-01-6)			x	ND	NA	NA	NA	NA	NA	1	ppm	kg/d	NA	NA	NA
30V. Trichlorofluoromethane (75-69-4)			NA	not	required	not	required	not	required	NA	NA	NA	NA	NA	NA
31V. Vinyl Chloride (75-01-4)			x	ND	NA	NA	NA	NA	NA	1	ppm	kg/d	NA	NA	NA
GC/MS FRACTION — ACID COMPOUNDS															
1A. 2-Chlorophenol (95-57-8)			x	ND	NA	NA	NA	NA	NA	1	ppm	kg/d	NA	NA	NA
2A. 2,4-Dichlorophenol (120-83-2)			x	ND	NA	NA	NA	NA	NA	1	ppm	kg/d	NA	NA	NA
3A. 2,4-Dimethylphenol (105-67-9)			x	ND	NA	NA	NA	NA	NA	1	ppm	kg/d	NA	NA	NA
4A. 4,6-Dinitro-O-Cresol (534-52-1)			x	ND	NA	NA	NA	NA	NA	1	ppm	kg/d	NA	NA	NA
5A. 2,4-Dinitrophenol (51-28-5)			x	ND	NA	NA	NA	NA	NA	1	ppm	kg/d	NA	NA	NA
6A. 2-Nitrophenol (88-75-5)			x	ND	NA	NA	NA	NA	NA	1	ppm	kg/d	NA	NA	NA
7A. 4-Nitrophenol (100-02-7)			x	ND	NA	NA	NA	NA	NA	1	ppm	kg/d	NA	NA	NA
8A. P-Chloro-M-Cresol (59-50-7)			x	ND	NA	NA	NA	NA	NA	1	ppm	kg/d	NA	NA	NA
9A. Pentachlorophenol (87-86-5)			x	ND	NA	NA	NA	NA	NA	1	ppm	kg/d	NA	NA	NA
10A. Phenol (108-95-2)			x	ND	NA	NA	NA	NA	NA	1	ppm	kg/d	NA	NA	NA
11A. 2,4,6-Trichlorophenol (88-06-2)			x	ND	NA	NA	NA	NA	NA	1	ppm	kg/d	NA	NA	NA

CONTINUE ON REVERSE

VAD065376279 NORTH ANNA POWER STATION OUTFALL 009 Settling Pond

1. POLLUTANT AND CAS NUMBER (if available)	2. MARK 'X'			3. EFFLUENT							4. UNITS		5. INTAKE (optional)		
	a. TESTING REQUIRED	b. BELIEVED PRESENT	c. BELIEVED ABSENT	a. MAXIMUM DAILY VALUE		b. MAXIMUM 30 DAY VALUE (if available)		c. LONG TERM AVRG. VALUE (if available)		d. NO. OF ANALYSES	a. CONCENTRATION	b. MASS	a. LONG TERM AVERAGE VALUE		b. NO. OF ANALYSES
				(1) CONCENTRATION	(2) MASS	(1) CONCENTRATION	(2) MASS	(1) CONCENTRATION	(2) MASS				(1) CONCENTRATION	(2) MASS	
GC/MS FRACTION — BASE/NEUTRAL COMPOUNDS															
1B. Acenaphthene (83-32-9)			x	ND	NA	NA	NA	NA	NA	1	ppm	kg/d	NA	NA	NA
2B. Acenaphtylene (208-96-8)			x	ND	NA	NA	NA	NA	NA	1	ppm	kg/d	NA	NA	NA
3B. Anthracene (120-12-7)			x	ND	NA	NA	NA	NA	NA	1	ppm	kg/d	NA	NA	NA
4B. Benzidine (92-87-5)			x	ND	NA	NA	NA	NA	NA	1	ppm	kg/d	NA	NA	NA
5B. Benzo *(a)* Anthracene (56-55-3)			x	ND	NA	NA	NA	NA	NA	1	ppm	kg/d	NA	NA	NA
6B. Benzo *(a)* Pyrene (50-32-8)			x	ND	NA	NA	NA	NA	NA	1	ppm	kg/d	NA	NA	NA
7B. 3,4-Benzo-fluoranthene (205-99-2)			x	ND	NA	NA	NA	NA	NA	1	ppm	kg/d	NA	NA	NA
8B. Benzo *(ghi)* Perylene (191-24-2)			x	ND	NA	NA	NA	NA	NA	1	ppm	kg/d	NA	NA	NA
9B. Benzo *(k)* Fluoranthene (207-08-9)			x	ND	NA	NA	NA	NA	NA	1	ppm	kg/d	NA	NA	NA
10B. Bis *(2-Chloro-ethoxy)* Methane (111-91-1)			x	ND	NA	NA	NA	NA	NA	1	ppm	kg/d	NA	NA	NA
11B. Bis *(2-Chloro-ethyl)* Ether (111-44-4)			x	ND	NA	NA	NA	NA	NA	1	ppm	kg/d	NA	NA	NA
12B. Bis *(2-Chloroiso-propyl)* Ether (102-60-1)			x	ND	NA	NA	NA	NA	NA	1	ppm	kg/d	NA	NA	NA
13B. Bis *(2-Ethyl-hexyl)* Phthalate (117-81-7)			x	ND	NA	NA	NA	NA	NA	1	ppm	kg/d	NA	NA	NA
14B. 4-Bromo-phenyl Phenyl Ether (101-55-3)			x	ND	NA	NA	NA	NA	NA	1	ppm	kg/d	NA	NA	NA
15B. Butyl Benzyl Phthalate (85-68-7)			x	ND	NA	NA	NA	NA	NA	1	ppm	kg/d	NA	NA	NA
16B. 2-Chloro-naphthalene (91-58-7)			x	ND	NA	NA	NA	NA	NA	1	ppm	kg/d	NA	NA	NA
17B. 4-Chloro-phenyl Phenyl Ether (7005-72-3)			x	ND	NA	NA	NA	NA	NA	1	ppm	kg/d	NA	NA	NA
18B. Chrysene (218-01-9)			x	ND	NA	NA	NA	NA	NA	1	ppm	kg/d	NA	NA	NA
19B. Dibenzo *(a, h)* Anthracene (53-70-3)			x	ND	NA	NA	NA	NA	NA	1	ppm	kg/d	NA	NA	NA
20B. 1,2-Dichloro-benzene (95-50-1)			x	ND	NA	NA	NA	NA	NA	1	ppm	kg/d	NA	NA	NA
21B. 1,3-Dichloro-benzene (541-73-1)			x	ND	NA	NA	NA	NA	NA	1	ppm	kg/d	NA	NA	NA

CONTINUE ON PAGE V-7

NORTH ANNA POWER STATION

EPA I.D. NUMBER (copy from Item 1 of Form 1)	OUTFALL NUMBER
VAD065376279	009

Settling Pond

CONTINUED FROM PAGE V-6

1. POLLUTANT AND CAS NUMBER (if available)	2. MARK 'X'			3. EFFLUENT							4. UNITS		5. INTAKE (optional)		
	a. TESTING REQUIRED	b. BELIEVED PRESENT	c. BELIEVED ABSENT	a. MAXIMUM DAILY VALUE		b. MAXIMUM 30 DAY VALUE (if available)		c. LONG TERM AVRG. VALUE (if available)		d. NO. OF ANALYSES	a. CONCENTRATION	b. MASS	a. LONG TERM AVERAGE VALUE		b. NO. OF ANALYSES
				(1) CONCENTRATION	(2) MASS	(1) CONCENTRATION	(2) MASS	(1) CONCENTRATION	(2) MASS				(1) CONCENTRATION	(2) MASS	
GC/MS FRACTION — BASE/NEUTRAL COMPOUNDS (continued)															
22B. 1,4-Dichlorobenzene (106-46-7)			x	ND	NA	NA	NA	NA	NA	1	ppm	kg/d	NA	NA	NA
23B. 3,3'-Dichlorobenzidine (91-94-1)			x	ND	NA	NA	NA	NA	NA	1	ppm	kg/d	NA	NA	NA
24B. Diethyl Phthalate (84-66-2)			x	ND	NA	NA	NA	NA	NA	1	ppm	kg/d	NA	NA	NA
25B. Dimethyl Phthalate (131-11-3)			x	ND	NA	NA	NA	NA	NA	1	ppm	kg/d	NA	NA	NA
26B. Di-N-Butyl Phthalate (84-74-2)			x	ND	NA	NA	NA	NA	NA	1	ppm	kg/d	NA	NA	NA
27B. 2,4-Dinitrotoluene (121-14-2)			x	ND	NA	NA	NA	NA	NA	1	ppm	kg/d	NA	NA	NA
28B. 2,6-Dinitrotoluene (606-20-2)			x	ND	NA	NA	NA	NA	NA	1	ppm	kg/d	NA	NA	NA
29B. Di-N-Octyl Phthalate (117-84-0)			x	ND	NA	NA	NA	NA	NA	1	ppm	kg/d	NA	NA	NA
30B. 1,2-Diphenylhydrazine *(as Azobenzene)* (122-66-7)			x	ND	NA	NA	NA	NA	NA	1	ppm	kg/d	NA	NA	NA
31B. Fluoranthene (206-44-0)			x	ND	NA	NA	NA	NA	NA	1	ppm	kg/d	NA	NA	NA
32B. Fluorene (86-73-7)			x	ND	NA	NA	NA	NA	NA	1	ppm	kg/d	NA	NA	NA
33B. Hexachlorobenzene (118-74-1)			x	ND	NA	NA	NA	NA	NA	1	ppm	kg/d	NA	NA	NA
34B. Hexachlorobutadiene (87-68-3)			x	ND	NA	NA	NA	NA	NA	1	ppm	kg/d	NA	NA	NA
35B. Hexachlorocyclopentadiene (77-47-4)			x	ND	NA	NA	NA	NA	NA	1	ppm	kg/d	NA	NA	NA
36B. Hexachloroethane (67-72-1)			x	ND	NA	NA	NA	NA	NA	1	ppm	kg/d	NA	NA	NA
37B. Indeno *(1,2,3-cd)* Pyrene (193-39-5)			x	ND	NA	NA	NA	NA	NA	1	ppm	kg/d	NA	NA	NA
38B. Isophorone (78-59-1)			x	ND	NA	NA	NA	NA	NA	1	ppm	kg/d	NA	NA	NA
39B. Naphthalene (91-20-3)			x	ND	NA	NA	NA	NA	NA	1	ppm	kg/d	NA	NA	NA
40B. Nitrobenzene (98-95-3)			x	ND	NA	NA	NA	NA	NA	1	ppm	kg/d	NA	NA	NA
41B. N-Nitrosodimethylamine (62-75-9)			x	ND	NA	NA	NA	NA	NA	1	ppm	kg/d	NA	NA	NA
42B. N-Nitrosodi-N-Propylamine (621-64-7)			x	ND	NA	NA	NA	NA	NA	1	ppm	kg/d	NA	NA	NA

CONTINUE ON REVERSE

1. POLLUTANT AND CAS NUMBER (if available)	2. MARK 'X'			3. EFFLUENT							4. UNITS		5. INTAKE (optional)		
	a. TESTING REQUIRED	b. BELIEVED PRESENT	c. BELIEVED ABSENT	a. MAXIMUM DAILY VALUE		b. MAXIMUM 30 DAY VALUE (if available)		c. LONG TERM AVRG. VALUE (if available)		d. NO. OF ANALYSES	a. CONCENTRATION	b. MASS	a. LONG TERM AVERAGE VALUE		b. NO. OF ANALYSES
				(1) CONCENTRATION	(2) MASS	(1) CONCENTRATION	(2) MASS	(1) CONCENTRATION	(2) MASS				(1) CONCENTRATION	(2) MASS	
GC/MS FRACTION — BASE/NEUTRAL COMPOUNDS *(continued)*															
43B. N-Nitrosodiphenylamine (86-30-6)			x	ND	NA	NA	NA	NA	NA	1	ppm	kg/d	NA	NA	NA
44B. Phenanthrene (85-01-8)			x	ND	NA	NA	NA	NA	NA	1	ppm	kg/d	NA	NA	NA
45B. Pyrene (129-00-0)			x	ND	NA	NA	NA	NA	NA	1		kg/d	NA	NA	NA
46B. 1,2,4-Trichlorobenzene (120-82-1)			x	ND	NA	NA	NA	NA	NA	1	ppm	kg/d	NA	NA	NA
GC/MS FRACTION — PESTICIDES															
1P. Aldrin (309-00-2)			x	NA	NA	NA	NA	NA	NA	NA	ppm	kg/d	NA	NA	NA
2P. α-BHC (319-84-6)			x	NA	NA	NA	NA	NA	NA	NA	ppm	kg/d	NA	NA	NA
3P. β-BHC (319-85-7)			x	NA	NA	NA	NA	NA	NA	NA	ppm	kg/d	NA	NA	NA
4P. γ-BHC (58-89-9)			x	NA	NA	NA	NA	NA	NA	NA	ppm	kg/d	NA	NA	NA
5P. δ-BHC (319-86-8)			x	NA	NA	NA	NA	NA	NA	NA	ppm	kg/d	NA	NA	NA
6P. Chlordane (57-74-9)			x	NA	NA	NA	NA	NA	NA	NA	ppm	kg/d	NA	NA	NA
7P. 4,4'-DDT (50-29-3)			x	NA	NA	NA	NA	NA	NA	NA	ppm	kg/d	NA	NA	NA
8P. 4,4'-DDE (72-55-9)			x	NA	NA	NA	NA	NA	NA	NA	ppm	kg/d	NA	NA	NA
9P. 4,4'-DDD (72-54-8)			x	NA	NA	NA	NA	NA	NA	NA	ppm	kg/d	NA	NA	NA
10P. Dieldrin (60-57-1)			x	NA	NA	NA	NA	NA	NA	NA	ppm	kg/d	NA	NA	NA
11P. α-Endosulfan (115-29-7)			x	NA	NA	NA	NA	NA	NA	NA	ppm	kg/d	NA	NA	NA
12P. β-Endosulfan (115-29-7)			x	NA	NA	NA	NA	NA	NA	NA	ppm	kg/d	NA	NA	NA
13P. Endosulfan Sulfate (1031-07-8)			x	NA	NA	NA	NA	NA	NA	NA	ppm	kg/d	NA	NA	NA
14P. Endrin (72-20-8)			x	NA	NA	NA	NA	NA	NA	NA	ppm	kg/d	NA	NA	NA
15P. Endrin Aldehyde (7421-93-4)			x	NA	NA	NA	NA	NA	NA	NA	ppm	kg/d	NA	NA	NA
16P. Heptachlor (76-44-8)			x	NA	NA	NA	NA	NA	NA	NA	ppm	kg/d	NA	NA	NA

NORTH ANNA POWER STATION

EPA I.D. NUMBER (copy from Item 1 of Form 1)	OUTFALL NUMBER
VAD065376279	009

Settling Pond

CONTINUED FROM PAGE V-8

1. POLLUTANT AND CAS NUMBER (if available)	2. MARK 'X'			3. EFFLUENT							4. UNITS		5. INTAKE (optional)		
	a. TESTING REQUIRED	b. BELIEVED PRESENT	c. BELIEVED ABSENT	a. MAXIMUM DAILY VALUE		b. MAXIMUM 30 DAY VALUE (if available)		c. LONG TERM AVRG. VALUE (if available)		d. NO. OF ANALYSES	a. CONCENTRATION	b. MASS	a. LONG TERM AVERAGE VALUE		b. NO. OF ANALYSES
				(1) CONCENTRATION	(2) MASS	(1) CONCENTRATION	(2) MASS	(1) CONCENTRATION	(2) MASS				(1) CONCENTRATION	(2) MASS	
GC/MS FRACTION — PESTICIDES (continued)															
17P. Heptachlor Epoxide (1024-57-3)			x	NA	NA	NA	NA	NA	NA	NA	ppm	kg/d	NA	NA	NA
18P. PCB-1242 (53469-21-9)			x	NA	NA	NA	NA	NA	NA	NA	ppm	kg/d	NA	NA	NA
19P. PCB-1254 (11097-69-1)			x	NA	NA	NA	NA	NA	NA	NA	ppm	kg/d	NA	NA	NA
20P. PCB-1221 (11104-28-2)			x	NA	NA	NA	NA	NA	NA	NA	ppm	kg/d	NA	NA	NA
21P. PCB-1232 (11141-16-5)			x	NA	NA	NA	NA	NA	NA	NA	ppm	kg/d	NA	NA	NA
22P. PCB-1248 (12672-29-6)			x	NA	NA	NA	NA	NA	NA	NA	ppm	kg/d	NA	NA	NA
23P. PCB-1260 (11096-82-5)			x	NA	NA	NA	NA	NA	NA	NA	ppm	kg/d	NA	NA	NA
24P. PCB-1016 (12674-11-2)			x	NA	NA	NA	NA	NA	NA	NA	ppm	kg/d	NA	NA	NA
25P. Toxaphene (8001-35-2)			x	NA	NA	NA	NA	NA	NA	NA	ppm	kg/d	NA	NA	NA

PLEASE PRINT OR TYPE IN THE UNSHADED AREAS ONLY. You may report some or all of this information on separate sheets *(use the same format)* instead of completing these pages. SEE INSTRUCTIONS.

NORTH ANNA POWER STATION

EPA I.D. NUMBER *(copy from Item 1 of Form 1)*

VAD065376279

Domestic Water Overflow

V. INTAKE AND EFFLUENT CHARACTERISTICS *(continued from page 3 of Form 2-C)*

SEE ADDENDUM FOR MORE INFO.

OUTFALL NO. 019

PART A - You must provide the results of at least one analysis for every pollutant in this table. Complete one table for each outfall. See instructions for additional details.

1. POLLUTANT	2. EFFLUENT a. MAXIMUM DAILY VALUE (1) CONCENTRATION	a. MAXIMUM DAILY VALUE (2) MASS	b. MAXIMUM 30 DAY VALUE (if available) (1) CONCENTRATION	b. MAXIMUM 30 DAY VALUE (2) MASS	c. LONG TERM AVRG. VALUE (if available) (1) CONCENTRATION	c. LONG TERM AVRG. VALUE (2) MASS	d. NO. OF ANALYSES	3. UNITS (specify if blank) a. CONCENTRATION	b. MASS	4. INTAKE (optional) a. LONG TERM AVERAGE VALUE (1) CONCENTRATION	a. LONG TERM AVERAGE VALUE (2) MASS	b. NO. OF ANALYSES
a. Biochemical Oxygen Demand *(BOD)*	ND	NA	NA	NA	NA	NA	1	ppm	kg/d	NA	NA	NA
b. Chemical Oxygen Demand *(COD)*	ND	NA	NA	NA	NA	NA	1	ppm	kg/d	NA	NA	NA
c. Total Organic Carbon *(TOC)*	6.3	NA	NA	NA	NA	NA	1	ppm	kg/d	NA	NA	NA
d. Total Suspended Solids *(TSS)*	ND	NA	NA	NA	NA	NA	1	ppm	kg/d	NA	NA	NA
e. Ammonia *(as N)*	0.02	NA	NA	NA	NA	NA	1	ppm	kg/d	NA	NA	NA
f. Flow	VALUE 0		VALUE 0		VALUE * 0		12	MGD	NA	VALUE NA		NA
g. Temperature *(winter)*	VALUE NA		VALUE NA		VALUE NA		NA	°C		VALUE NA		NA
h. Temperature *(summer)*	VALUE 23.8		VALUE NA		VALUE NA		1	°C		VALUE NA		NA
i. pH	MINIMUM 7.0	MAXIMUM 7.0	MINIMUM NA	MAXIMUM NA			1	STANDARD UNITS				

PART B - Mark "X" in column 2-a for each pollutant you know or have reason to believe is present. Mark "X" in column 2-b for each pollutant you believe to be absent. If you mark column 2a for any pollutant which is limited either directly, or indirectly but expressly, in an effluent limitations guideline, you must provide the results of at least one analysis for that pollutant. For other pollutants for which you mark column 2a, you must provide quantitative data or an explanation of their presence in your discharge. Complete one table for each outfall. See the instructions for additional details and requirements.

1. POLLUTANT AND CAS NO. *(if available)*	2. MARK 'X' a. BELIEVED PRESENT	b. BELIEVED ABSENT	3. EFFLUENT a. MAXIMUM DAILY VALUE (1) CONCENTRATION	a. MAXIMUM DAILY VALUE (2) MASS	b. MAXIMUM 30 DAY VALUE (if available) (1) CONCENTRATION	b. MAXIMUM 30 DAY VALUE (2) MASS	c. LONG TERM AVRG. VALUE (if available) (1) CONCENTRATION	c. LONG TERM AVRG. VALUE (2) MASS	d. NO. OF ANALYSES	4. UNITS a. CONCENTRATION	b. MASS	5. INTAKE (optional) a. LONG TERM AVERAGE VALUE (1) CONCENTRATION	a. LONG TERM AVERAGE VALUE (2) MASS	b. NO. OF ANALYSES
a. Bromide (24959-67-9)	X		0.27	NA	NA	NA	NA	NA	1	ppm	kg/d	NA	NA	NA
b. Chlorine, Total Residual		X	ND	NA	NA	NA	NA	NA	1	ppm	kg/d	NA	NA	NA
c. Color	X		10	NA	NA	NA	NA	NA	1	color units	NA	NA	NA	NA
d. Fecal Coliform		X	NA	NA	NA	NA	NA	NA	NA	col/100ml	NA	NA	NA	NA
e. Fluoride (16984-48-8)	X		0.061	NA	NA	NA	NA	NA	1	ppm	kg/d	NA	NA	NA
f. Nitrate—Nitrite *(as N)*	X		0.08	NA	NA	NA	NA	NA	1	ppm	kg/d	NA	NA	NA

CONTINUE ON REVERSE

*** No flow data, mass values not available.**

ITEM V-B CONTINUED FROM FRONT

VAD065376279 NORTH ANNA POWER STATION **OUTFALL 019** **Domestic Water Overflow**

1. POLLUTANT AND CAS NO. (if available)	2. MARK 'X'		3. EFFLUENT							4. UNITS		5. INTAKE (optional)		
	a. BELIEVED PRESENT	b. BELIEVED ABSENT	a. MAXIMUM DAILY VALUE		b. MAXIMUM 30 DAY VALUE (if available)		c. LONG TERM AVRG. VALUE (if available)		d. NO. OF ANALYSES	a. CONCENTRATION	b. MASS	a. LONG TERM AVERAGE VALUE		b. NO. OF ANALYSES
			(1) CONCENTRATION	(2) MASS	(1) CONCENTRATION	(2) MASS	(1) CONCENTRATION	(2) MASS				(1) CONCENTRATION	(2) MASS	
g. Nitrogen, Total Organic (as N)	x		0.71	NA	NA	NA	NA	NA	1	ppm	kg/d	NA	NA	NA
h. Oil and Grease		x	ND	NA	NA	NA	NA	NA	1	ppm	kg/d	NA	NA	NA
i. Phosphorus (as P), Total (7723-14-0)	x		0.03	NA	NA	NA	NA	NA	1	ppm	kg/d	NA	NA	NA
j. Radioactivity														
(1) Alpha, Total	x		2.20	NA	NA	NA	NA	NA	1	pCi/L	NA	NA	NA	NA
(2) Beta, Total	x		8.80	NA	NA	NA	NA	NA	1	pCi/L	NA	NA	NA	NA
(3) Radium, Total		x	NA	NA	NA	NA	NA	NA	NA	NA	NA	NA	NA	NA
(4) Radium 226, Total		x	NA	NA	NA	NA	NA	NA	NA	NA	NA	NA	NA	NA
k. Sulfate (as SO_4) (14808-79-8)	x		4.83	NA	NA	NA	NA	NA	1	ppm	kg/d	NA	NA	NA
l. Sulfide (as S)	x		0.03	NA	NA	NA	NA	NA	1	ppm	kg/d	NA	NA	NA
m. Sulfite (as SO_3) (14265-45-3)		x	NA	NA	NA	NA	NA	NA	NA	ppm	kg/d	NA	NA	NA
n. Surfactants		x	NA	NA	NA	NA	NA	NA	NA	ppm	kg/d	NA	NA	NA
o. Aluminum, Total (7429-90-5)	x		0.032	NA	NA	NA	NA	NA	1	ppm	kg/d	NA	NA	NA
p. Barium, Total (7440-39-3)	x		0.029	NA	NA	NA	NA	NA	1	ppm	kg/d	NA	NA	NA
q. Boron, Total (7440-42-8)		x	ND	NA	NA	NA	NA	NA	1	ppm	kg/d	NA	NA	NA
r. Cobalt, Total (7440-48-4)		x	ND	NA	NA	NA	NA	NA	1	ppm	kg/d	NA	NA	NA
s. Iron, Total (7439-89-6)	x		0.12	NA	NA	NA	NA	NA	1	ppm	kg/d	NA	NA	NA
t. Magnesium, Total (7439-95-4)	x		5.85	NA	NA	NA	NA	NA	1	ppm	kg/d	NA	NA	NA
u. Molybdenum, Total (7439-98-7)		x	ND	NA	NA	NA	NA	NA	1	ppm	kg/d	NA	NA	NA
v. Manganese, Total (7439-96-5)	x		0.022	NA	NA	NA	NA	NA	1	ppm	kg/d	NA	NA	NA
w. Tin, Total (7440-31-5)		x	ND	NA	NA	NA	NA	NA	1	ppm	kg/d	NA	NA	NA
x. Titanium, Total (7440-32-6)		x	ND	NA	NA	NA	NA	NA	1	ppm	kg/d	NA	NA	NA

CONTINUE ON PAGE V-3

NORTH ANNA POWER STATION

EPA I.D. NUMBER (copy from Item 1 of Form 1)	OUTFALL NUMBER
VAD065376279	019

Domestic Water Overflow

CONTINUED FROM PAGE 3 OF FORM 2-C

PART C - If you are a primary industry and this outfall contains process wastewater, refer to Table 2c-2 in the instructions to determine which of the GC/MS fractions you must test for. Mark "X" in column 2-a for all such GC/MS fractions that apply to your industry and for ALL toxic metals, cyanides, and total phenols. If you are not required to mark column 2-a *(secondary industries, nonprocess wastewater outfalls, and nonrequired GC/MS fractions)*, mark "X" in column 2-b for each pollutant you know or have reason to believe is present. Mark "X" in column 2-c for each pollutant you believe is absent. If you mark column 2a for any pollutant, you must provide the results of at least one analysis for that pollutant. If you mark column 2b for any pollutant, you must provide the results of at least one analysis for that pollutant if you know or have reason to believe it will be discharged in concentrations of 10 ppb or greater. If you mark column 2b for acrolein, acrylonitrile, 2,4 dinitrophenol, or 2-methyl-4, 6 dinitrophenol, you must provide the results of at least one analysis for each of these pollutants which you know or have reason to believe that you discharge in concentrations of 100 ppb or greater. Otherwise, for pollutants for which you mark column 2b, you must either submit at least one analysis or briefly describe the reasons the pollutant is expected to be discharged. Note that there are 7 pages to this part; please review each carefully. Complete one table *(all 7 pages)* for each outfall. See instructions for additional details and requirements.

1. POLLUTANT AND CAS NUMBER (if available)	2. MARK 'X'			3. EFFLUENT							4. UNITS		5. INTAKE (optional)		
	a. TESTING REQUIRED	b. BELIEVED PRESENT	c. BELIEVED ABSENT	a. MAXIMUM DAILY VALUE		b. MAXIMUM 30 DAY VALUE (if available)		c. LONG TERM AVRG. VALUE (if available)		d. NO. OF ANALYSES	a. CONCENTRATION	b. MASS	a. LONG TERM AVERAGE VALUE		b. NO. OF ANALYSES
				(1) CONCENTRATION	(2) MASS	(1) CONCENTRATION	(2) MASS	(1) CONCENTRATION	(2) MASS				(1) CONCENTRATION	(2) MASS	
METALS, CYANIDE, AND TOTAL PHENOLS															
1M. Antimony, Total (7440-36-0)			x	ND	NA	NA	NA	NA	NA	1	ppm	kg/d	NA	NA	NA
2M. Arsenic, Total (7440-38-2)			x	ND	NA	NA	NA	NA	NA	1	ppm	kg/d	NA	NA	NA
3M. Beryllium, Total, 7440-41-7)			x	ND	NA	NA	NA	NA	NA	1	ppm	kg/d	NA	NA	NA
4M. Cadmium, Total (7440-43-9)			x	ND	NA	NA	NA	NA	NA	1	ppm	kg/d	NA	NA	NA
5M. Chromium, Total (7440-47-3)			x	ND	NA	NA	NA	NA	NA	1	ppm	kg/d	NA	NA	NA
6M. Copper, Total (7440-50-8)		x		0.066	NA	NA	NA	NA	NA	1	ppm	kg/d	NA	NA	NA
7M. Lead, Total (7439-92-1)		x		0.002	NA	NA	NA	NA	NA	1	ppm	kg/d	NA	NA	NA
8M. Mercury, Total (7439-97-6)			x	ND	NA	NA	NA	NA	NA	1	ppm	kg/d	NA	NA	NA
9M. Nickel, Total (7440-02-0)			x	ND	NA	NA	NA	NA	NA	1	ppm	kg/d	NA	NA	NA
10M. Selenium, Total (7782-49-2)			x	ND	NA	NA	NA	NA	NA	1	ppm	kg/d	NA	NA	NA
11M. Silver, Total (7440-22-4)			x	ND	NA	NA	NA	NA	NA	1	ppm	kg/d	NA	NA	NA
12M. Thallium, Total (7440-28-0)			x	ND	NA	NA	NA	NA	NA	1	ppm	kg/d	NA	NA	NA
13M. Zinc, Total (7440-66-6)		x		0.050	NA	NA	NA	NA	NA	1	ppm	kg/d	NA	NA	NA
14M. Cyanide, Total (57-12-5)			x	ND	NA	NA	NA	NA	NA	1	ppm	kg/d	NA	NA	NA
15M. Phenols, Total		x		0.01	NA	NA	NA	NA	NA	1	ppm	kg/d	NA	NA	NA
DIOXIN															
2,3,7,8 Tetrachlorodibenzo-P-Dioxin (1764-01-6)			x	DESCRIBE RESULTS NA											

CONTINUE ON REVERSE

STF ENV441F.7

VAD065376279 NORTH ANNA POWER STATION OUTFALL 019 Domestic Water Overflow

1. POLLUTANT AND CAS NUMBER (if available)	2. MARK 'X'			3. EFFLUENT							4. UNITS		5. INTAKE (optional)		
	a. TESTING REQUIRED	b. BELIEVED PRESENT	c. BELIEVED ABSENT	a. MAXIMUM DAILY VALUE		b. MAXIMUM 30 DAY VALUE (if available)		c. LONG TERM AVRG. VALUE (if available)		d. NO. OF ANALYSES	a. CONCENTRATION	b. MASS	a. LONG TERM AVERAGE VALUE		b. NO. OF ANALYSES
				(1) CONCENTRATION	(2) MASS	(1) CONCENTRATION	(2) MASS	(1) CONCENTRATION	(2) MASS				(1) CONCENTRATION	(2) MASS	
GC/MS FRACTION — VOLATILE COMPOUNDS															
1V. Acrolein (107-02-8)			x	ND	NA	NA	NA	NA	NA	1	ppm	kg/d	NA	NA	NA
2V. Acrylonitrile (107-13-1)			x	ND	NA	NA	NA	NA	NA	1	ppm	kg/d	NA	NA	NA
3V. Benzene (71-43-2)			x	ND	NA	NA	NA	NA	NA	1	ppm	kg/d	NA	NA	NA
4V. Bis (*Chloromethyl*) Ether (542-88-1)			NA	not	required	not	required	not	required	NA	NA	NA	NA	NA	NA
5V. Bromoform (75-25-2)			x	ND	NA	NA	NA	NA	NA	1	ppm	kg/d	NA	NA	NA
6V. Carbon Tetrachloride (56-23-5)			x	ND	NA	NA	NA	NA	NA	1	ppm	kg/d	NA	NA	NA
7V. Chlorobenzene (108-90-7)			x	ND	NA	NA	NA	NA	NA	1	ppm	kg/d	NA	NA	NA
8V. Chlorodibromomethane (124-48-1)			x	ND	NA	NA	NA	NA	NA	1	ppm	kg/d	NA	NA	NA
9V. Chloroethane (75-00-3)			x	ND	NA	NA	NA	NA	NA	1	ppm	kg/d	NA	NA	NA
10V. 2-Chloroethylvinyl Ether (110-75-8)			x	ND	NA	NA	NA	NA	NA	1	ppm	kg/d	NA	NA	NA
11V. Chloroform (67-66-3)			x	ND	NA	NA	NA	NA	NA	1	ppm	kg/d	NA	NA	NA
12V. Dichlorobromomethane (75-27-4)			x	ND	NA	NA	NA	NA	NA	1	ppm	kg/d	NA	NA	NA
13V. Dichlorodifluoromethane (75-71-8)			NA	not	required	not	required	not	required	NA	NA	NA	NA	NA	NA
14V. 1,1-Dichloroethane (75-34-3)			x	ND	NA	NA	NA	NA	NA	1	ppm	kg/d	NA	NA	NA
15V. 1,2-Dichloroethane (107-06-2)			x	ND	NA	NA	NA	NA	NA	1	ppm	kg/d	NA	NA	NA
16V. 1,1-Dichloroethylene (75-35-4)			x	ND	NA	NA	NA	NA	NA	1	ppm	kg/d	NA	NA	NA
17V. 1,2-Dichloropropane (78-87-5)			x	ND	NA	NA	NA	NA	NA	1	ppm	kg/d	NA	NA	NA
18V. 1,3-Dichloropropylene (542-75-6)			x	ND	NA	NA	NA	NA	NA	1	ppm	kg/d	NA	NA	NA
19V. Ethylbenzene (100-41-4)			x	ND	NA	NA	NA	NA	NA	1	ppm	kg/d	NA	NA	NA
20V. Methyl Bromide (74-83-9)			x	ND	NA	NA	NA	NA	NA	1	ppm	kg/d	NA	NA	NA
21V. Methyl Chloride (74-87-3)			x	ND	NA	NA	NA	NA	NA	1	ppm	kg/d	NA	NA	NA

CONTINUE ON PAGE V-5

NORTH ANNA POWER STATION

EPA I.D. NUMBER (copy from Item 1 of Form 1)	OUTFALL NUMBER
VAD065376279	019

Domestic Water Overflow

CONTINUED FROM PAGE V-4

1. POLLUTANT AND CAS NUMBER (if available)	2. MARK 'X'			3. EFFLUENT							4. UNITS		5. INTAKE (optional)		
	a. TESTING REQUIRED	b. BELIEVED PRESENT	c. BELIEVED ABSENT	a. MAXIMUM DAILY VALUE		b. MAXIMUM 30 DAY VALUE (if available)		c. LONG TERM AVRG. VALUE (if available)		d. NO. OF ANALYSES	a. CONCENTRATION	b. MASS	a. LONG TERM AVERAGE VALUE		b. NO. OF ANALYSES
				(1) CONCENTRATION	(2) MASS	(1) CONCENTRATION	(2) MASS	(1) CONCENTRATION	(2) MASS				(1) CONCENTRATION	(2) MASS	
GC/MS FRACTION — VOLATILE COMPOUNDS *(continued)*															
22V. Methylene Chloride (75-09-2)			x	ND	NA	NA	NA	NA	NA	1	ppm	kg/d	NA	NA	NA
23V. 1,1,2,2-Tetrachloroethane (79-34-5)			x	ND	NA	NA	NA	NA	NA	1	ppm	kg/d	NA	NA	NA
24V. Tetrachloroethylene (127-18-4)			x	ND	NA	NA	NA	NA	NA	1	ppm	kg/d	NA	NA	NA
25V. Toluene (108-88-3)			x	ND	NA	NA	NA	NA	NA	1	ppm	kg/d	NA	NA	NA
26V. 1,2-Trans-Dichloroethylene (156-60-5)			x	ND	NA	NA	NA	NA	NA	1	ppm	kg/d	NA	NA	NA
27V. 1,1,1-Trichloroethane (71-55-6)			x	ND	NA	NA	NA	NA	NA	1	ppm	kg/d	NA	NA	NA
28V. 1,1,2-Trichloroethane (79-00-5)			x	ND	NA	NA	NA	NA	NA	1	ppm	kg/d	NA	NA	NA
29V. Trichloroethylene (79-01-6)			x	ND	NA	NA	NA	NA	NA	1	ppm	kg/d	NA	NA	NA
30V. Trichlorofluoromethane (75-69-4)			NA	not	required	not	required	not	required	NA	NA	NA	NA	NA	NA
31V. Vinyl Chloride (75-01-4)			x	ND	NA	NA	NA	NA	NA	1	ppm	kg/d	NA	NA	NA
GC/MS FRACTION — ACID COMPOUNDS															
1A. 2-Chlorophenol (95-57-8)			x	ND	NA	NA	NA	NA	NA	1	ppm	kg/d	NA	NA	NA
2A. 2,4-Dichlorophenol (120-83-2)			x	ND	NA	NA	NA	NA	NA	1	ppm	kg/d	NA	NA	NA
3A. 2,4-Dimethylphenol (105-67-9)			x	ND	NA	NA	NA	NA	NA	1	ppm	kg/d	NA	NA	NA
4A. 4,6-Dinitro-O-Cresol (534-52-1)			x	ND	NA	NA	NA	NA	NA	1	ppm	kg/d	NA	NA	NA
5A. 2,4-Dinitrophenol (51-28-5)			x	ND	NA	NA	NA	NA	NA	1	ppm	kg/d	NA	NA	NA
6A. 2-Nitrophenol (88-75-5)			x	ND	NA	NA	NA	NA	NA	1	ppm	kg/d	NA	NA	NA
7A. 4-Nitrophenol (100-02-7)			x	ND	NA	NA	NA	NA	NA	1	ppm	kg/d	NA	NA	NA
8A. P-Chloro-M-Cresol (59-50-7)			x	ND	NA	NA	NA	NA	NA	1	ppm	kg/d	NA	NA	NA
9A. Pentachlorophenol (87-86-5)			x	ND	NA	NA	NA	NA	NA	1	ppm	kg/d	NA	NA	NA
10A. Phenol (108-95-2)			x	ND	NA	NA	NA	NA	NA	1	ppm	kg/d	NA	NA	NA
11A. 2,4,6-Trichlorophenol (88-06-2)			x	ND	NA	NA	NA	NA	NA	1	ppm	kg/d	NA	NA	NA

CONTINUE ON REVERSE

STF ENV441F.9

CONTINUED FROM THE FRONT

VAD065376279 NORTH ANNA POWER STATION OUTFALL 019 Domestic Water Overflow

1. POLLUTANT AND CAS NUMBER (if available)	2. MARK 'X' a. TESTING REQUIRED	b. BELIEVED PRESENT	c. BELIEVED ABSENT	3. EFFLUENT a. MAXIMUM DAILY VALUE (1) CONCENTRATION	(2) MASS	b. MAXIMUM 30 DAY VALUE (if available) (1) CONCENTRATION	(2) MASS	c. LONG TERM AVRG. VALUE (if available) (1) CONCENTRATION	(2) MASS	d. NO. OF ANALYSES	4. UNITS a. CONCENTRATION	b. MASS	5. INTAKE (optional) a. LONG TERM AVERAGE VALUE (1) CONCENTRATION	(2) MASS	b. NO. OF ANALYSES
GC/MS FRACTION — BASE/NEUTRAL COMPOUNDS															
1B. Acenaphthene (83-32-9)			x	ND	NA	NA	NA	NA	NA	1	ppm	kg/d	NA	NA	NA
2B. Acenaphtylene (208-96-8)			x	ND	NA	NA	NA	NA	NA	1	ppm	kg/d	NA	NA	NA
3B. Anthracene (120-12-7)			x	ND	NA	NA	NA	NA	NA	1	ppm	kg/d	NA	NA	NA
4B. Benzidine (92-87-5)			x	ND	NA	NA	NA	NA	NA	1	ppm	kg/d	NA	NA	NA
5B. Benzo *(a)* Anthracene (56-55-3)			x	ND	NA	NA	NA	NA	NA	1	ppm	kg/d	NA	NA	NA
6B. Benzo *(a)* Pyrene (50-32-8)			x	ND	NA	NA	NA	NA	NA	1	ppm	kg/d	NA	NA	NA
7B. 3,4-Benzo-fluoranthene (205-99-2)			x	ND	NA	NA	NA	NA	NA	1	ppm	kg/d	NA	NA	NA
8B. Benzo *(ghi)* Perylene (191-24-2)			x	ND	NA	NA	NA	NA	NA	1	ppm	kg/d	NA	NA	NA
9B. Benzo *(k)* Fluoranthene (207-08-9)			x	ND	NA	NA	NA	NA	NA	1	ppm	kg/d	NA	NA	NA
10B. Bis *(2-Chloro-ethoxy)* Methane (111-91-1)			x	ND	NA	NA	NA	NA	NA	1	ppm	kg/d	NA	NA	NA
11B. Bis *(2-Chloro-ethyl)* Ether (111-44-4)			x	ND	NA	NA	NA	NA	NA	1	ppm	kg/d	NA	NA	NA
12B. Bis *(2-Chloroiso-propyl)* Ether (102-60-1)			x	ND	NA	NA	NA	NA	NA	1	ppm	kg/d	NA	NA	NA
13B. Bis *(2-Ethyl-hexyl)* Phthalate (117-81-7)			x	ND	NA	NA	NA	NA	NA	1	ppm	kg/d	NA	NA	NA
14B. 4-Bromo-phenyl Phenyl Ether (101-55-3)			x	ND	NA	NA	NA	NA	NA	1	ppm	kg/d	NA	NA	NA
15B. Butyl Benzyl Phthalate (85-68-7)			x	ND	NA	NA	NA	NA	NA	1	ppm	kg/d	NA	NA	NA
16B. 2-Chloro-naphthalene (91-58-7)			x	ND	NA	NA	NA	NA	NA	1	ppm	kg/d	NA	NA	NA
17B. 4-Chloro-phenyl Phenyl Ether (7005-72-3)			x	ND	NA	NA	NA	NA	NA	1	ppm	kg/d	NA	NA	NA
18B. Chrysene (218-01-9)			x	ND	NA	NA	NA	NA	NA	1	ppm	kg/d	NA	NA	NA
19B. Dibenzo *(a, h)* Anthracene (53-70-3)			x	ND	NA	NA	NA	NA	NA	1	ppm	kg/d	NA	NA	NA
20B. 1,2-Dichloro-benzene (95-50-1)			x	ND	NA	NA	NA	NA	NA	1	ppm	kg/d	NA	NA	NA
21B. 1,3-Dichloro-benzene (541-73-1)			x	ND	NA	NA	NA	NA	NA	1	ppm	kg/d	NA	NA	NA

CONTINUE ON PAGE V-7

NORTH ANNA POWER STATION

EPA I.D. NUMBER (copy from Item 1 of Form 1)	OUTFALL NUMBER
VAD065376279	019

Domestic Water Overflow

CONTINUED FROM PAGE V-6

1. POLLUTANT AND CAS NUMBER (if available)	2. MARK 'X'			3. EFFLUENT							4. UNITS		5. INTAKE (optional)		
	a. TESTING REQUIRED	b. BELIEVED PRESENT	c. BELIEVED ABSENT	a. MAXIMUM DAILY VALUE		b. MAXIMUM 30 DAY VALUE (if available)		c. LONG TERM AVRG. VALUE (if available)		d. NO. OF ANALYSES	a. CONCENTRATION	b. MASS	a. LONG TERM AVERAGE VALUE		b. NO. OF ANALYSES
				(1) CONCENTRATION	(2) MASS	(1) CONCENTRATION	(2) MASS	(1) CONCENTRATION	(2) MASS				(1) CONCENTRATION	(2) MASS	
GC/MS FRACTION — BASE/NEUTRAL COMPOUNDS *(continued)*															
22B. 1,4-Dichlorobenzene (106-46-7)			x	ND	NA	NA	NA	NA	NA	1	ppm	kg/d	NA	NA	NA
23B. 3,3'-Dichlorobenzidine (91-94-1)			x	ND	NA	NA	NA	NA	NA	1	ppm	kg/d	NA	NA	NA
24B. Diethyl Phthalate (84-66-2)			x	ND	NA	NA	NA	NA	NA	1	ppm	kg/d	NA	NA	NA
25B. Dimethyl Phthalate (131-11-3)			x	ND	NA	NA	NA	NA	NA	1	ppm	kg/d	NA	NA	NA
26B. Di-N-Butyl Phthalate (84-74-2)			x	ND	NA	NA	NA	NA	NA	1	ppm	kg/d	NA	NA	NA
27B. 2,4-Dinitrotoluene (121-14-2)			x	ND	NA	NA	NA	NA	NA	1	ppm	kg/d	NA	NA	NA
28B. 2,6-Dinitrotoluene (606-20-2)			x	ND	NA	NA	NA	NA	NA	1	ppm	kg/d	NA	NA	NA
29B. Di-N-Octyl Phthalate (117-84-0)			x	ND	NA	NA	NA	NA	NA	1	ppm	kg/d	NA	NA	NA
30B. 1,2-Diphenylhydrazine *(as Azobenzene)* (122-66-7)			x	ND	NA	NA	NA	NA	NA	1	ppm	kg/d	NA	NA	NA
31B. Fluoranthene (206-44-0)			x	ND	NA	NA	NA	NA	NA	1	ppm	kg/d	NA	NA	NA
32B. Fluorene (86-73-7)			x	ND	NA	NA	NA	NA	NA	1	ppm	kg/d	NA	NA	NA
33B. Hexachlorobenzene (118-74-1)			x	ND	NA	NA	NA	NA	NA	1	ppm	kg/d	NA	NA	NA
34B. Hexachlorobutadiene (87-68-3)			x	ND	NA	NA	NA	NA	NA	1	ppm	kg/d	NA	NA	NA
35B. Hexachlorocyclopentadiene (77-47-4)			x	ND	NA	NA	NA	NA	NA	1	ppm	kg/d	NA	NA	NA
36B. Hexachloroethane (67-72-1)			x	ND	NA	NA	NA	NA	NA	1	ppm	kg/d	NA	NA	NA
37B. Indeno *(1,2,3-cd)* Pyrene (193-39-5)			x	ND	NA	NA	NA	NA	NA	1	ppm	kg/d	NA	NA	NA
38B. Isophorone (78-59-1)			x	ND	NA	NA	NA	NA	NA	1	ppm	kg/d	NA	NA	NA
39B. Naphthalene (91-20-3)			x	ND	NA	NA	NA	NA	NA	1	ppm	kg/d	NA	NA	NA
40B. Nitrobenzene (98-95-3)			x	ND	NA	NA	NA	NA	NA	1	ppm	kg/d	NA	NA	NA
41B. N-Nitrosodimethylamine (62-75-9)			x	ND	NA	NA	NA	NA	NA	1	ppm	kg/d	NA	NA	NA
42B. N-Nitrosodi-N-Propylamine (621-64-7)			x	ND	NA	NA	NA	NA	NA	1	ppm	kg/d	NA	NA	NA

CONTINUE ON REVERSE

STF ENV441F.11

1. POLLUTANT AND CAS NUMBER (if available)	2. MARK 'X'			3. EFFLUENT							4. UNITS		5. INTAKE (optional)		
	a. TESTING REQUIRED	b. BELIEVED PRESENT	c. BELIEVED ABSENT	a. MAXIMUM DAILY VALUE		b. MAXIMUM 30 DAY VALUE (if available)		c. LONG TERM AVRG. VALUE (if available)		d. NO. OF ANALYSES	a. CONCENTRATION	b. MASS	a. LONG TERM AVERAGE VALUE		b. NO. OF ANALYSES
				(1) CONCENTRATION	(2) MASS	(1) CONCENTRATION	(2) MASS	(1) CONCENTRATION	(2) MASS				(1) CONCENTRATION	(2) MASS	
GC/MS FRACTION — BASE/NEUTRAL COMPOUNDS *(continued)*															
43B. N-Nitrosodiphenylamine (86-30-6)			x	ND	NA	NA	NA	NA	NA	1	ppm	kg/d	NA	NA	NA
44B. Phenanthrene (85-01-8)			x	ND	NA	NA	NA	NA	NA	1	ppm	kg/d	NA	NA	NA
45B. Pyrene (129-00-0)			x	ND	NA	NA	NA	NA	NA	1		kg/d	NA	NA	NA
46B. 1,2,4-Trichlorobenzene (120-82-1)			x	ND	NA	NA	NA	NA	NA	1	ppm	kg/d	NA	NA	NA
GC/MS FRACTION — PESTICIDES															
1P. Aldrin (309-00-2)			x	NA	NA	NA	NA	NA	NA	NA	ppm	kg/d	NA	NA	NA
2P. α-BHC (319-84-6)			x	NA	NA	NA	NA	NA	NA	NA	ppm	kg/d	NA	NA	NA
3P. β-BHC (319-85-7)			x	NA	NA	NA	NA	NA	NA	NA	ppm	kg/d	NA	NA	NA
4P. γ-BHC (58-89-9)			x	NA	NA	NA	NA	NA	NA	NA	ppm	kg/d	NA	NA	NA
5P. δ-BHC (319-86-8)			x	NA	NA	NA	NA	NA	NA	NA	ppm	kg/d	NA	NA	NA
6P. Chlordane (57-74-9)			x	NA	NA	NA	NA	NA	NA	NA	ppm	kg/d	NA	NA	NA
7P. 4,4'-DDT (50-29-3)			x	NA	NA	NA	NA	NA	NA	NA	ppm	kg/d	NA	NA	NA
8P. 4,4'-DDE (72-55-9)			x	NA	NA	NA	NA	NA	NA	NA	ppm	kg/d	NA	NA	NA
9P. 4,4'-DDD (72-54-8)			x	NA	NA	NA	NA	NA	NA	NA	ppm	kg/d	NA	NA	NA
10P. Dieldrin (60-57-1)			x	NA	NA	NA	NA	NA	NA	NA	ppm	kg/d	NA	NA	NA
11P. α-Endosulfan (115-29-7)			x	NA	NA	NA	NA	NA	NA	NA	ppm	kg/d	NA	NA	NA
12P. β-Endosulfan (115-29-7)			x	NA	NA	NA	NA	NA	NA	NA	ppm	kg/d	NA	NA	NA
13P. Endosulfan Sulfate (1031-07-8)			x	NA	NA	NA	NA	NA	NA	NA	ppm	kg/d	NA	NA	NA
14P. Endrin (72-20-8)			x	NA	NA	NA	NA	NA	NA	NA	ppm	kg/d	NA	NA	NA
15P. Endrin Aldehyde (7421-93-4)			x	NA	NA	NA	NA	NA	NA	NA	ppm	kg/d	NA	NA	NA
16P. Heptachlor (76-44-8)			x	NA	NA	NA	NA	NA	NA	NA	ppm	kg/d	NA	NA	NA

CONTINUE ON PAGE V-9

NORTH ANNA POWER STATION

EPA I.D. NUMBER (copy from Item 1 of Form 1)	OUTFALL NUMBER
VAD065376279	019

Domestic Water Overflow

CONTINUED FROM PAGE V-8

1. POLLUTANT AND CAS NUMBER (if available)	2. MARK 'X'			3. EFFLUENT							4. UNITS		5. INTAKE (optional)		
	a. TESTING REQUIRED	b. BELIEVED PRESENT	c. BELIEVED ABSENT	a. MAXIMUM DAILY VALUE		b. MAXIMUM 30 DAY VALUE (if available)		c. LONG TERM AVRG. VALUE (if available)		d. NO. OF ANALYSES	a. CONCENTRATION	b. MASS	a. LONG TERM AVERAGE VALUE		b. NO. OF ANALYSES
				(1) CONCENTRATION	(2) MASS	(1) CONCENTRATION	(2) MASS	(1) CONCENTRATION	(2) MASS				(1) CONCENTRATION	(2) MASS	
GC/MS FRACTION — PESTICIDES *(continued)*															
17P. Heptachlor Epoxide (1024-57-3)			x	NA	NA	NA	NA	NA	NA	NA	ppm	kg/d	NA	NA	NA
18P. PCB-1242 (53469-21-9)			x	NA	NA	NA	NA	NA	NA	NA	ppm	kg/d	NA	NA	NA
19P. PCB-1254 (11097-69-1)			x	NA	NA	NA	NA	NA	NA	NA	ppm	kg/d	NA	NA	NA
20P. PCB-1221 (11104-28-2)			x	NA	NA	NA	NA	NA	NA	NA	ppm	kg/d	NA	NA	NA
21P. PCB-1232 (11141-16-5)			x	NA	NA	NA	NA	NA	NA	NA	ppm	kg/d	NA	NA	NA
22P. PCB-1248 (12672-29-6)			x	NA	NA	NA	NA	NA	NA	NA	ppm	kg/d	NA	NA	NA
23P. PCB-1260 (11096-82-5)			x	NA	NA	NA	NA	NA	NA	NA	ppm	kg/d	NA	NA	NA
24P. PCB-1016 (12674-11-2)			x	NA	NA	NA	NA	NA	NA	NA	ppm	kg/d	NA	NA	NA
25P. Toxaphene (8001-35-2)			x	NA	NA	NA	NA	NA	NA	NA	ppm	kg/d	NA	NA	NA

PLEASE PRINT OR TYPE IN THE UNSHADED AREAS ONLY. You may report some or all of this information on separate sheets *(use the same format)* instead of completing these pages. SEE INSTRUCTIONS.

NORTH ANNA POWER STATION

EPA I.D. NUMBER *(copy from Item 1 of Form 1)*

VAD065376279

Reverse Osmosis Reject

V. INTAKE AND EFFLUENT CHARACTERISTICS *(continued from page 3 of Form 2-C)*

SEE ADDENDUM FOR MORE INFO.

OUTFALL NO. 020

PART A - You must provide the results of at least one analysis for every pollutant in this table. Complete one table for each outfall. See instructions for additional details.

1. POLLUTANT	2. EFFLUENT a. MAXIMUM DAILY VALUE (1) CONCENTRATION	2. EFFLUENT a. MAXIMUM DAILY VALUE (2) MASS	2. EFFLUENT b. MAXIMUM 30 DAY VALUE *(if available)* (1) CONCENTRATION	2. EFFLUENT b. MAXIMUM 30 DAY VALUE *(if available)* (2) MASS	2. EFFLUENT c. LONG TERM AVRG. VALUE *(if available)* (1) CONCENTRATION	2. EFFLUENT c. LONG TERM AVRG. VALUE *(if available)* (2) MASS	2. EFFLUENT d. NO. OF ANALYSES	3. UNITS *(specify if blank)* a. CONCENTRATION	3. UNITS *(specify if blank)* b. MASS	4. INTAKE *(optional)* a. LONG TERM AVERAGE VALUE (1) CONCENTRATION	4. INTAKE *(optional)* a. LONG TERM AVERAGE VALUE (2) MASS	4. INTAKE *(optional)* b. NO. OF ANALYSES
a. Biochemical Oxygen Demand *(BOD)*	ND	ND	NA	NA	NA	NA	1	ppm	kg/d	NA	NA	NA
b. Chemical Oxygen Demand *(COD)*	6.00	7.3	NA	NA	NA	NA	1	ppm	kg/d	NA	NA	NA
c. Total Organic Carbon *(TOC)*	7.2	8.7	NA	NA	NA	NA	1	ppm	kg/d	NA	NA	NA
d. Total Suspended Solids *(TSS)*	3.4	4.1	1.95	2.4	<0.86	<1.0	24	ppm	kg/d	NA	NA	NA
e. Ammonia *(as N)*	0.04	0.05	NA	NA	NA	NA	1	ppm	kg/d	NA	NA	NA
f. Flow	VALUE 0.65		VALUE 0.49		VALUE * 0.32		24	MGD	NA	VALUE NA		NA
g. Temperature *(winter)*	VALUE NA		VALUE NA		VALUE NA		NA	°C		VALUE NA		NA
h. Temperature *(summer)*	VALUE 27		VALUE NA		VALUE NA		1	°C		VALUE NA		NA
i. pH	MINIMUM 6.56	MAXIMUM 7.62	MINIMUM 6.56	MAXIMUM 7.62			24	STANDARD UNITS				

PART B - Mark "X" in column 2-a for each pollutant you know or have reason to believe is present. Mark "X" in column 2-b for each pollutant you believe to be absent. If you mark column 2a for any pollutant which is limited either directly, or indirectly but expressly, in an effluent limitations guideline, you must provide the results of at least one analysis for that pollutant. For other pollutants for which you mark column 2a, you must provide quantitative data or an explanation of their presence in your discharge. Complete one table for each outfall. See the instructions for additional details and requirements.

1. POLLUTANT AND CAS NO. *(if available)*	2. MARK 'X' a. BELIEVED PRESENT	2. MARK 'X' b. BELIEVED ABSENT	3. EFFLUENT a. MAXIMUM DAILY VALUE (1) CONCENTRATION	3. EFFLUENT a. MAXIMUM DAILY VALUE (2) MASS	3. EFFLUENT b. MAXIMUM 30 DAY VALUE *(if available)* (1) CONCENTRATION	3. EFFLUENT b. MAXIMUM 30 DAY VALUE *(if available)* (2) MASS	3. EFFLUENT c. LONG TERM AVRG. VALUE *(if available)* (1) CONCENTRATION	3. EFFLUENT c. LONG TERM AVRG. VALUE *(if available)* (2) MASS	3. EFFLUENT d. NO. OF ANALYSES	4. UNITS a. CONCENTRATION	4. UNITS b. MASS	5. INTAKE *(optional)* a. LONG TERM AVERAGE VALUE (1) CONCENTRATION	5. INTAKE *(optional)* a. LONG TERM AVERAGE VALUE (2) MASS	5. INTAKE *(optional)* b. NO. OF ANALYSES
a. Bromide (24959-67-9)	x		0.59	0.7	NA	NA	NA	NA	1	ppm	kg/d	NA	NA	NA
b. Chlorine, Total Residual	x		1.1	1.3	0.58	0.7	0.22	0.3	24	ppm	kg/d	NA	NA	NA
c. Color	x		30	NA	NA	NA	NA	NA	1	color units	NA	NA	NA	NA
d. Fecal Coliform		x	NA	NA	NA	NA	NA	NA	NA	col/100ml	NA	NA	NA	NA
e. Fluoride (16984-48-8)	x		0.050	0.1	NA	NA	NA	NA	1	ppm	kg/d	NA	NA	NA
f. Nitrate—Nitrite *(as N)*	x		0.39	0.47	NA	NA	NA	NA	1	ppm	kg/d	NA	NA	NA

*** Long term average flow (1999) used to calculate all mass values.**

ITEM V-B CONTINUED FROM FRONT

VAD065376279 NORTH ANNA POWER STATION **OUTFALL 020** **Reverse Osmosis Reject**

1. POLLUTANT AND CAS NO. (if available)	2. MARK 'X' a. BELIEVED PRESENT	2. MARK 'X' b. BELIEVED ABSENT	3. EFFLUENT a. MAXIMUM DAILY VALUE (1) CONCENTRATION	a. MAXIMUM DAILY VALUE (2) MASS	b. MAXIMUM 30 DAY VALUE (if available) (1) CONCENTRATION	b. MAXIMUM 30 DAY VALUE (2) MASS	c. LONG TERM AVRG. VALUE (if available) (1) CONCENTRATION	c. LONG TERM AVRG. VALUE (2) MASS	d. NO. OF ANALYSES	4. UNITS a. CONCENTRATION	4. UNITS b. MASS	5. INTAKE (optional) a. LONG TERM AVERAGE VALUE (1) CONCENTRATION	a. LONG TERM AVERAGE VALUE (2) MASS	b. NO. OF ANALYSES
g. Nitrogen, Total Organic (as N)	x		1.06	1.3	NA	NA	NA	NA	1	ppm	kg/d	NA	NA	NA
h. Oil and Grease		x	ND	NA	NA	NA	NA	NA	1	ppm	kg/d	NA	NA	NA
i. Phosphorus (as P), Total (7723-14-0)	x		0.03	0.04	NA	NA	NA	NA	1	ppm	kg/d	NA	NA	NA
j. Radioactivity														
(1) Alpha, Total	x		1.10	NA	NA	NA	NA	NA	1	pCi/L	NA	NA	NA	NA
(2) Beta, Total	x		6.80	NA	NA	NA	NA	NA	1	pCi/L	NA	NA	NA	NA
(3) Radium, Total		x	NA	NA	NA	NA	NA	NA	NA	NA	NA	NA	NA	NA
(4) Radium 226, Total		x	NA	NA	NA	NA	NA	NA	NA	NA	NA	NA	NA	NA
k. Sulfate (as SO_4) (14808-79-8)	x		10.05	12.2	NA	NA	NA	NA	1	ppm	kg/d	NA	NA	NA
l. Sulfide (as S)		x	ND	NA	NA	NA	NA	NA	1	ppm	kg/d	NA	NA	NA
m. Sulfite (as SO_3) (14265-45-3)		x	NA	NA	NA	NA	NA	NA	NA	ppm	kg/d	NA	NA	NA
n. Surfactants		x	ND	NA	NA	NA	NA	NA	1	ppm	kg/d	NA	NA	NA
o. Aluminum, Total (7429-90-5)	x		0.071	0.1	NA	NA	NA	NA	1	ppm	kg/d	NA	NA	NA
p. Barium, Total (7440-39-3)	x		0.058	0.1	NA	NA	NA	NA	1	ppm	kg/d	NA	NA	NA
q. Boron, Total (7440-42-8)	x		0.04	0.05	NA	NA	NA	NA	1	ppm	kg/d	NA	NA	NA
r. Cobalt, Total (7440-48-4)		x	ND	NA	NA	NA	NA	NA	1	ppm	kg/d	NA	NA	NA
s. Iron, Total (7439-89-6)	x		0.09	0.1	NA	NA	NA	NA	1	ppm	kg/d	NA	NA	NA
t. Magnesium, Total (7439-95-4)	x		4.90	5.9	NA	NA	NA	NA	1	ppm	kg/d	NA	NA	NA
u. Molybdenum, Total (7439-98-7)		x	ND	NA	NA	NA	NA	NA	1	ppm	kg/d	NA	NA	NA
v. Manganese, Total (7439-96-5)	x		0.007	0.01	NA	NA	NA	NA	1	ppm	kg/d	NA	NA	NA
w. Tin, Total (7440-31-5)		x	ND	NA	NA	NA	NA	NA	1	ppm	kg/d	NA	NA	NA
x. Titanium, Total (7440-32-6)		x	ND	NA	NA	NA	NA	NA	1	ppm	kg/d	NA	NA	NA

CONTINUE ON PAGE V-3

NORTH ANNA POWER STATION

EPA I.D. NUMBER (copy from Item 1 of Form 1)	OUTFALL NUMBER
VAD065376279	020

Reverse Osmosis Reject

CONTINUED FROM PAGE 3 OF FORM 2-C

PART C - If you are a primary industry and this outfall contains process wastewater, refer to Table 2c-2 in the instructions to determine which of the GC/MS fractions you must test for. Mark "X" in column 2-a for all such GC/MS fractions that apply to your industry and for ALL toxic metals, cyanides, and total phenols. If you are not required to mark column 2-a *(secondary industries, nonprocess wastewater outfalls, and nonrequired GC/MS fractions)*, mark "X" in column 2-b for each pollutant you know or have reason to believe is present. Mark "X" in column 2-c for each pollutant you believe is absent. If you mark column 2a for any pollutant, you must provide the results of at least one analysis for that pollutant. If you mark column 2b for any pollutant, you must provide the results of at least one analysis for that pollutant if you know or have reason to believe it will be discharged in concentrations of 10 ppb or greater. If you mark column 2b for acrolein, acrylonitrile, 2,4 dinitrophenol, or 2-methyl-4, 6 dinitrophenol, you must provide the results of at least one analysis for each of these pollutants which you know or have reason to believe that you discharge in concentrations of 100 ppb or greater. Otherwise, for pollutants for which you mark column 2b, you must either submit at least one analysis or briefly describe the reasons the pollutant is expected to be discharged. Note that there are 7 pages to this part; please review each carefully. Complete one table *(all 7 pages)* for each outfall. See instructions for additional details and requirements.

1. POLLUTANT AND CAS NUMBER (if available)	2. MARK 'X'			3. EFFLUENT							4. UNITS		5. INTAKE (optional)		
	a. TESTING REQUIRED	b. BELIEVED PRESENT	c. BELIEVED ABSENT	a. MAXIMUM DAILY VALUE		b. MAXIMUM 30 DAY VALUE (if available)		c. LONG TERM AVRG. VALUE (if available)		d. NO. OF ANALYSES	a. CONCENTRATION	b. MASS	a. LONG TERM AVERAGE VALUE		b. NO. OF ANALYSES
				(1) CONCENTRATION	(2) MASS	(1) CONCENTRATION	(2) MASS	(1) CONCENTRATION	(2) MASS				(1) CONCENTRATION	(2) MASS	
METALS, CYANIDE, AND TOTAL PHENOLS															
1M. Antimony, Total (7440-36-0)			x	ND	NA	NA	NA	NA	NA	1	ppm	kg/d	NA	NA	NA
2M. Arsenic, Total (7440-38-2)			x	ND	NA	NA	NA	NA	NA	1	ppm	kg/d	NA	NA	NA
3M. Beryllium, Total, 7440-41-7)			x	ND	NA	NA	NA	NA	NA	1	ppm	kg/d	NA	NA	NA
4M. Cadmium, Total (7440-43-9)			x	ND	NA	NA	NA	NA	NA	1	ppm	kg/d	NA	NA	NA
5M. Chromium, Total (7440-47-3)			x	ND	NA	NA	NA	NA	NA	1	ppm	kg/d	NA	NA	NA
6M. Copper, Total (7440-50-8)		x		0.005	0.01	NA	NA	NA	NA	1	ppm	kg/d	NA	NA	NA
7M. Lead, Total (7439-92-1)			x	ND	NA	NA	NA	NA	NA	1	ppm	kg/d	NA	NA	NA
8M. Mercury, Total (7439-97-6)			x	ND	NA	NA	NA	NA	NA	1	ppm	kg/d	NA	NA	NA
9M. Nickel, Total (7440-02-0)			x	ND	NA	NA	NA	NA	NA	1	ppm	kg/d	NA	NA	NA
10M. Selenium, Total (7782-49-2)			x	ND	NA	NA	NA	NA	NA	1	ppm	kg/d	NA	NA	NA
11M. Silver, Total (7440-22-4)			x	ND	NA	NA	NA	NA	NA	1	ppm	kg/d	NA	NA	NA
12M. Thallium, Total (7440-28-0)			x	ND	NA	NA	NA	NA	NA	1	ppm	kg/d	NA	NA	NA
13M. Zinc, Total (7440-66-6)			x	ND	NA	NA	NA	NA	NA	1	ppm	kg/d	NA	NA	NA
14M. Cyanide, Total (57-12-5)			x	ND	NA	NA	NA	NA	NA	1	ppm	kg/d	NA	NA	NA
15M. Phenols, Total			x	ND	NA	NA	NA	NA	NA	1	ppm	kg/d	NA	NA	NA
DIOXIN															
2,3,7,8 Tetrachlorodibenzo-P-Dioxin (1764-01-6)			x	DESCRIBE RESULTS NA											

CONTINUE ON REVERSE

STF ENV441F.7

CONTINUED FROM THE FRONT

VAD065376279 NORTH ANNA POWER STATION OUTFALL 020 Reverse Osmosis Reject

1. POLLUTANT AND CAS NUMBER (if available)	2. MARK 'X'			3. EFFLUENT							4. UNITS		5. INTAKE (optional)		
	a. TESTING REQUIRED	b. BELIEVED PRESENT	c. BELIEVED ABSENT	a. MAXIMUM DAILY VALUE		b. MAXIMUM 30 DAY VALUE (if available)		c. LONG TERM AVRG. VALUE (if available)		d. NO. OF ANALYSES	a. CONCENTRATION	b. MASS	a. LONG TERM AVERAGE VALUE		b. NO. OF ANALYSES
				(1) CONCENTRATION	(2) MASS	(1) CONCENTRATION	(2) MASS	(1) CONCENTRATION	(2) MASS				(1) CONCENTRATION	(2) MASS	
GC/MS FRACTION — VOLATILE COMPOUNDS															
1V. Acrolein (107-02-8)			x	ND	NA	NA	NA	NA	NA	1	ppm	kg/d	NA	NA	NA
2V. Acrylonitrile (107-13-1)			x	ND	NA	NA	NA	NA	NA	1	ppm	kg/d	NA	NA	NA
3V. Benzene (71-43-2)			x	ND	NA	NA	NA	NA	NA	1	ppm	kg/d	NA	NA	NA
4V. Bis (Chloromethyl) Ether (542-88-1)			NA	not	required	not	required	not	required	NA	NA	NA	NA	NA	NA
5V. Bromoform (75-25-2)			x	ND	NA	NA	NA	NA	NA	1	ppm	kg/d	NA	NA	NA
6V. Carbon Tetrachloride (56-23-5)			x	ND	NA	NA	NA	NA	NA	1	ppm	kg/d	NA	NA	NA
7V. Chlorobenzene (108-90-7)			x	ND	NA	NA	NA	NA	NA	1	ppm	kg/d	NA	NA	NA
8V. Chlorodibromomethane (124-48-1)			x	ND	NA	NA	NA	NA	NA	1	ppm	kg/d	NA	NA	NA
9V. Chloroethane (75-00-3)			x	ND	NA	NA	NA	NA	NA	1	ppm	kg/d	NA	NA	NA
10V. 2-Chloroethylvinyl Ether (110-75-8)			x	ND	NA	NA	NA	NA	NA	1	ppm	kg/d	NA	NA	NA
11V. Chloroform (67-66-3)		x		0.0141	0.017	NA	NA	NA	NA	1	ppm	kg/d	NA	NA	NA
12V. Dichlorobromomethane (75-27-4)			x	ND	NA	NA	NA	NA	NA	1	ppm	kg/d	NA	NA	NA
13V. Dichlorodifluoromethane (75-71-8)			NA	not	required	not	required	not	required	NA	NA	NA	NA	NA	NA
14V. 1,1-Dichloroethane (75-34-3)			x	ND	NA	NA	NA	NA	NA	1	ppm	kg/d	NA	NA	NA
15V. 1,2-Dichloroethane (107-06-2)			x	ND	NA	NA	NA	NA	NA	1	ppm	kg/d	NA	NA	NA
16V. 1,1-Dichloroethylene (75-35-4)			x	ND	NA	NA	NA	NA	NA	1	ppm	kg/d	NA	NA	NA
17V. 1,2-Dichloropropane (78-87-5)			x	ND	NA	NA	NA	NA	NA	1	ppm	kg/d	NA	NA	NA
18V. 1,3-Dichloropropylene (542-75-6)			x	ND	NA	NA	NA	NA	NA	1	ppm	kg/d	NA	NA	NA
19V. Ethylbenzene (100-41-4)			x	ND	NA	NA	NA	NA	NA	1	ppm	kg/d	NA	NA	NA
20V. Methyl Bromide (74-83-9)			x	ND	NA	NA	NA	NA	NA	1	ppm	kg/d	NA	NA	NA
21V. Methyl Chloride (74-87-3)			x	ND	NA	NA	NA	NA	NA	1	ppm	kg/d	NA	NA	NA

CONTINUE ON PAGE V-5

NORTH ANNA POWER STATION

EPA I.D. NUMBER (copy from Item 1 of Form 1)	OUTFALL NUMBER
VAD065376279	020

CONTINUED FROM PAGE V-4

Reverse Osmosis Reject

1. POLLUTANT AND CAS NUMBER (if available)	2. MARK 'X'			3. EFFLUENT							4. UNITS		5. INTAKE (optional)		
	a. TESTING REQUIRED	b. BELIEVED PRESENT	c. BELIEVED ABSENT	a. MAXIMUM DAILY VALUE		b. MAXIMUM 30 DAY VALUE (if available)		c. LONG TERM AVRG. VALUE (if available)		d. NO. OF ANALYSES	a. CONCENTRATION	b. MASS	a. LONG TERM AVERAGE VALUE		b. NO. OF ANALYSES
				(1) CONCENTRATION	(2) MASS	(1) CONCENTRATION	(2) MASS	(1) CONCENTRATION	(2) MASS				(1) CONCENTRATION	(2) MASS	
GC/MS FRACTION — VOLATILE COMPOUNDS *(continued)*															
22V. Methylene Chloride (75-09-2)			x	ND	NA	NA	NA	NA	NA	1	ppm	kg/d	NA	NA	NA
23V. 1,1,2,2-Tetrachloroethane (79-34-5)			x	ND	NA	NA	NA	NA	NA	1	ppm	kg/d	NA	NA	NA
24V. Tetrachloroethylene (127-18-4)			x	ND	NA	NA	NA	NA	NA	1	ppm	kg/d	NA	NA	NA
25V. Toluene (108-88-3)			x	ND	NA	NA	NA	NA	NA	1	ppm	kg/d	NA	NA	NA
26V. 1,2-Trans-Dichloroethylene (156-60-5)			x	ND	NA	NA	NA	NA	NA	1	ppm	kg/d	NA	NA	NA
27V. 1,1,1-Trichloroethane (71-55-6)			x	ND	NA	NA	NA	NA	NA	1	ppm	kg/d	NA	NA	NA
28V. 1,1,2-Trichloroethane (79-00-5)			x	ND	NA	NA	NA	NA	NA	1	ppm	kg/d	NA	NA	NA
29V. Trichloroethylene (79-01-6)			x	ND	NA	NA	NA	NA	NA	1	ppm	kg/d	NA	NA	NA
30V. Trichlorofluoromethane (75-69-4)			NA	not	required	not	required	not	required	NA	NA	NA	NA	NA	NA
31V. Vinyl Chloride (75-01-4)			x	ND	NA	NA	NA	NA	NA	1	ppm	kg/d	NA	NA	NA
GC/MS FRACTION — ACID COMPOUNDS															
1A. 2-Chlorophenol (95-57-8)			x	ND	NA	NA	NA	NA	NA	1	ppm	kg/d	NA	NA	NA
2A. 2,4-Dichlorophenol (120-83-2)			x	ND	NA	NA	NA	NA	NA	1	ppm	kg/d	NA	NA	NA
3A. 2,4-Dimethylphenol (105-67-9)			x	ND	NA	NA	NA	NA	NA	1	ppm	kg/d	NA	NA	NA
4A. 4,6-Dinitro-O-Cresol (534-52-1)			x	ND	NA	NA	NA	NA	NA	1	ppm	kg/d	NA	NA	NA
5A. 2,4-Dinitrophenol (51-28-5)			x	ND	NA	NA	NA	NA	NA	1	ppm	kg/d	NA	NA	NA
6A. 2-Nitrophenol (88-75-5)			x	ND	NA	NA	NA	NA	NA	1	ppm	kg/d	NA	NA	NA
7A. 4-Nitrophenol (100-02-7)			x	ND	NA	NA	NA	NA	NA	1	ppm	kg/d	NA	NA	NA
8A. P-Chloro-M-Cresol (59-50-7)			x	ND	NA	NA	NA	NA	NA	1	ppm	kg/d	NA	NA	NA
9A. Pentachlorophenol (87-86-5)			x	ND	NA	NA	NA	NA	NA	1	ppm	kg/d	NA	NA	NA
10A. Phenol (108-95-2)			x	ND	NA	NA	NA	NA	NA	1	ppm	kg/d	NA	NA	NA
11A. 2,4,6-Trichlorophenol (88-06-2)			x	ND	NA	NA	NA	NA	NA	1	ppm	kg/d	NA	NA	NA

CONTINUE ON REVERSE

STF ENV441F.9

VAD065376279 NORTH ANNA POWER STATION OUTFALL 020 Reverse Osmosis Reject

1. POLLUTANT AND CAS NUMBER (if available)	2. MARK 'X' a. TESTING REQUIRED	b. BELIEVED PRESENT	c. BELIEVED ABSENT	3. EFFLUENT a. MAXIMUM DAILY VALUE (1) CONCENTRATION	(2) MASS	b. MAXIMUM 30 DAY VALUE (if available) (1) CONCENTRATION	(2) MASS	c. LONG TERM AVRG. VALUE (if available) (1) CONCENTRATION	(2) MASS	d. NO. OF ANALYSES	4. UNITS a. CONCENTRATION	b. MASS	5. INTAKE (optional) a. LONG TERM AVERAGE VALUE (1) CONCENTRATION	(2) MASS	b. NO. OF ANALYSES
GC/MS FRACTION — BASE/NEUTRAL COMPOUNDS															
1B. Acenaphthene (83-32-9)			x	ND	NA	NA	NA	NA	NA	1	ppm	kg/d	NA	NA	NA
2B. Acenaphtylene (208-96-8)			x	ND	NA	NA	NA	NA	NA	1	ppm	kg/d	NA	NA	NA
3B. Anthracene (120-12-7)			x	ND	NA	NA	NA	NA	NA	1	ppm	kg/d	NA	NA	NA
4B. Benzidine (92-87-5)			x	ND	NA	NA	NA	NA	NA	1	ppm	kg/d	NA	NA	NA
5B. Benzo *(a)* Anthracene (56-55-3)			x	ND	NA	NA	NA	NA	NA	1	ppm	kg/d	NA	NA	NA
6B. Benzo *(a)* Pyrene (50-32-8)			x	ND	NA	NA	NA	NA	NA	1	ppm	kg/d	NA	NA	NA
7B. 3,4-Benzo-fluoranthene (205-99-2)			x	ND	NA	NA	NA	NA	NA	1	ppm	kg/d	NA	NA	NA
8B. Benzo *(ghi)* Perylene (191-24-2)			x	ND	NA	NA	NA	NA	NA	1	ppm	kg/d	NA	NA	NA
9B. Benzo *(k)* Fluoranthene (207-08-9)			x	ND	NA	NA	NA	NA	NA	1	ppm	kg/d	NA	NA	NA
10B. Bis *(2-Chloro-ethoxy)* Methane (111-91-1)			x	ND	NA	NA	NA	NA	NA	1	ppm	kg/d	NA	NA	NA
11B. Bis *(2-Chloro-ethyl)* Ether (111-44-4)			x	ND	NA	NA	NA	NA	NA	1	ppm	kg/d	NA	NA	NA
12B. Bis *(2-Chloroiso-propyl)* Ether (102-60-1)			x	ND	NA	NA	NA	NA	NA	1	ppm	kg/d	NA	NA	NA
13B. Bis *(2-Ethyl-hexyl)* Phthalate (117-81-7)			x	ND	NA	NA	NA	NA	NA	1	ppm	kg/d	NA	NA	NA
14B. 4-Bromo-phenyl Phenyl Ether (101-55-3)			x	ND	NA	NA	NA	NA	NA	1	ppm	kg/d	NA	NA	NA
15B. Butyl Benzyl Phthalate (85-68-7)			x	ND	NA	NA	NA	NA	NA	1	ppm	kg/d	NA	NA	NA
16B. 2-Chloro-naphthalene (91-58-7)			x	ND	NA	NA	NA	NA	NA	1	ppm	kg/d	NA	NA	NA
17B. 4-Chloro-phenyl Phenyl Ether (7005-72-3)			x	ND	NA	NA	NA	NA	NA	1	ppm	kg/d	NA	NA	NA
18B. Chrysene (218-01-9)			x	ND	NA	NA	NA	NA	NA	1	ppm	kg/d	NA	NA	NA
19B. Dibenzo *(a, h)* Anthracene (53-70-3)			x	ND	NA	NA	NA	NA	NA	1	ppm	kg/d	NA	NA	NA
20B. 1,2-Dichloro-benzene (95-50-1)			x	ND	NA	NA	NA	NA	NA	1	ppm	kg/d	NA	NA	NA
21B. 1,3-Dichloro-benzene (541-73-1)			x	ND	NA	NA	NA	NA	NA	1	ppm	kg/d	NA	NA	NA

CONTINUE ON PAGE V-7

NORTH ANNA POWER STATION

EPA I.D. NUMBER (copy from Item 1 of Form 1)	OUTFALL NUMBER
VAD065376279	020

Reverse Osmosis Reject

CONTINUED FROM PAGE V-6

1. POLLUTANT AND CAS NUMBER (if available)	2. MARK 'X'			3. EFFLUENT							4. UNITS		5. INTAKE (optional)		
	a. TESTING REQUIRED	b. BELIEVED PRESENT	c. BELIEVED ABSENT	a. MAXIMUM DAILY VALUE		b. MAXIMUM 30 DAY VALUE (if available)		c. LONG TERM AVRG. VALUE (if available)		d. NO. OF ANALYSES	a. CONCENTRATION	b. MASS	a. LONG TERM AVERAGE VALUE		b. NO. OF ANALYSES
				(1) CONCENTRATION	(2) MASS	(1) CONCENTRATION	(2) MASS	(1) CONCENTRATION	(2) MASS				(1) CONCENTRATION	(2) MASS	
GC/MS FRACTION — BASE/NEUTRAL COMPOUNDS *(continued)*															
22B. 1,4-Dichlorobenzene (106-46-7)			x	ND	NA	NA	NA	NA	NA	1	ppm	kg/d	NA	NA	NA
23B. 3,3'-Dichlorobenzidine (91-94-1)			x	ND	NA	NA	NA	NA	NA	1	ppm	kg/d	NA	NA	NA
24B. Diethyl Phthalate (84-66-2)			x	ND	NA	NA	NA	NA	NA	1	ppm	kg/d	NA	NA	NA
25B. Dimethyl Phthalate (131-11-3)			x	ND	NA	NA	NA	NA	NA	1	ppm	kg/d	NA	NA	NA
26B. Di-N-Butyl Phthalate (84-74-2)			x	ND	NA	NA	NA	NA	NA	1	ppm	kg/d	NA	NA	NA
27B. 2,4-Dinitrotoluene (121-14-2)			x	ND	NA	NA	NA	NA	NA	1	ppm	kg/d	NA	NA	NA
28B. 2,6-Dinitrotoluene (606-20-2)			x	ND	NA	NA	NA	NA	NA	1	ppm	kg/d	NA	NA	NA
29B. Di-N-Octyl Phthalate (117-84-0)			x	ND	NA	NA	NA	NA	NA	1	ppm	kg/d	NA	NA	NA
30B. 1,2-Diphenylhydrazine *(as Azobenzene)* (122-66-7)			x	ND	NA	NA	NA	NA	NA	1	ppm	kg/d	NA	NA	NA
31B. Fluoranthene (206-44-0)			x	ND	NA	NA	NA	NA	NA	1	ppm	kg/d	NA	NA	NA
32B. Fluorene (86-73-7)			x	ND	NA	NA	NA	NA	NA	1	ppm	kg/d	NA	NA	NA
33B. Hexachlorobenzene (118-74-1)			x	ND	NA	NA	NA	NA	NA	1	ppm	kg/d	NA	NA	NA
34B. Hexachlorobutadiene (87-68-3)			x	ND	NA	NA	NA	NA	NA	1	ppm	kg/d	NA	NA	NA
35B. Hexachlorocyclopentadiene (77-47-4)			x	ND	NA	NA	NA	NA	NA	1	ppm	kg/d	NA	NA	NA
36B. Hexachloroethane (67-72-1)			x	ND	NA	NA	NA	NA	NA	1	ppm	kg/d	NA	NA	NA
37B. Indeno *(1,2,3-cd)* Pyrene (193-39-5)			x	ND	NA	NA	NA	NA	NA	1	ppm	kg/d	NA	NA	NA
38B. Isophorone (78-59-1)			x	ND	NA	NA	NA	NA	NA	1	ppm	kg/d	NA	NA	NA
39B. Naphthalene (91-20-3)			x	ND	NA	NA	NA	NA	NA	1	ppm	kg/d	NA	NA	NA
40B. Nitrobenzene (98-95-3)			x	ND	NA	NA	NA	NA	NA	1	ppm	kg/d	NA	NA	NA
41B. N-Nitrosodimethylamine (62-75-9)			x	ND	NA	NA	NA	NA	NA	1	ppm	kg/d	NA	NA	NA
42B. N-Nitrosodi-N-Propylamine (621-64-7)			x	ND	NA	NA	NA	NA	NA	1	ppm	kg/d	NA	NA	NA

CONTINUE ON REVERSE

STF ENV441F 11

1. POLLUTANT AND CAS NUMBER (if available)	2. MARK 'X' a. TESTING REQUIRED	b. BELIEVED PRESENT	c. BELIEVED ABSENT	3. EFFLUENT a. MAXIMUM DAILY VALUE (1) CONCENTRATION	(2) MASS	b. MAXIMUM 30 DAY VALUE (if available) (1) CONCENTRATION	(2) MASS	c. LONG TERM AVRG. VALUE (if available) (1) CONCENTRATION	(2) MASS	d. NO. OF ANALYSES	4. UNITS a. CONCENTRATION	b. MASS	5. INTAKE (optional) a. LONG TERM AVERAGE VALUE (1) CONCENTRATION	(2) MASS	b. NO. OF ANALYSES
GC/MS FRACTION — BASE/NEUTRAL COMPOUNDS *(continued)*															
43B. N-Nitrosodiphenylamine (86-30-6)			x	ND	NA	NA	NA	NA	NA	1	ppm	kg/d	NA	NA	NA
44B. Phenanthrene (85-01-8)			x	ND	NA	NA	NA	NA	NA	1	ppm	kg/d	NA	NA	NA
45B. Pyrene (129-00-0)			x	ND	NA	NA	NA	NA	NA	1		kg/d	NA	NA	NA
46B. 1,2,4-Trichlorobenzene (120-82-1)			x	ND	NA	NA	NA	NA	NA	1	ppm	kg/d	NA	NA	NA
GC/MS FRACTION — PESTICIDES															
1P. Aldrin (309-00-2)			x	NA	NA	NA	NA	NA	NA	NA	ppm	kg/d	NA	NA	NA
2P. α-BHC (319-84-6)			x	NA	NA	NA	NA	NA	NA	NA	ppm	kg/d	NA	NA	NA
3P. β-BHC (319-85-7)			x	NA	NA	NA	NA	NA	NA	NA	ppm	kg/d	NA	NA	NA
4P. γ-BHC (58-89-9)			x	NA	NA	NA	NA	NA	NA	NA	ppm	kg/d	NA	NA	NA
5P. δ-BHC (319-86-8)			x	NA	NA	NA	NA	NA	NA	NA	ppm	kg/d	NA	NA	NA
6P. Chlordane (57-74-9)			x	NA	NA	NA	NA	NA	NA	NA	ppm	kg/d	NA	NA	NA
7P. 4,4'-DDT (50-29-3)			x	NA	NA	NA	NA	NA	NA	NA	ppm	kg/d	NA	NA	NA
8P. 4,4'-DDE (72-55-9)			x	NA	NA	NA	NA	NA	NA	NA	ppm	kg/d	NA	NA	NA
9P. 4,4'-DDD (72-54-8)			x	NA	NA	NA	NA	NA	NA	NA	ppm	kg/d	NA	NA	NA
10P. Dieldrin (60-57-1)			x	NA	NA	NA	NA	NA	NA	NA	ppm	kg/d	NA	NA	NA
11P. α-Endosulfan (115-29-7)			x	NA	NA	NA	NA	NA	NA	NA	ppm	kg/d	NA	NA	NA
12P. β-Endosulfan (115-29-7)			x	NA	NA	NA	NA	NA	NA	NA	ppm	kg/d	NA	NA	NA
13P. Endosulfan Sulfate (1031-07-8)			x	NA	NA	NA	NA	NA	NA	NA1	ppm	kg/d	NA	NA	NA
14P. Endrin (72-20-8)			x	NA	NA	NA	NA	NA	NA	NA	ppm	kg/d	NA	NA	NA
15P. Endrin Aldehyde (7421-93-4)			x	NA	NA	NA	NA	NA	NA	NA	ppm	kg/d	NA	NA	NA
16P. Heptachlor (76-44-8)			x	NA	NA	NA	NA	NA	NA	NA	ppm	kg/d	NA	NA	NA

CONTINUE ON PAGE V-9

NORTH ANNA POWER STATION

EPA I.D. NUMBER (copy from Item 1 of Form 1)	OUTFALL NUMBER
VAD065376279	020

CONTINUED FROM PAGE V-8

Reverse Osmosis Reject

1. POLLUTANT AND CAS NUMBER (if available)	2. MARK 'X'			3. EFFLUENT							4. UNITS		5. INTAKE (optional)		
	a. TESTING REQUIRED	b. BELIEVED PRESENT	c. BELIEVED ABSENT	a. MAXIMUM DAILY VALUE		b. MAXIMUM 30 DAY VALUE (if available)		c. LONG TERM AVRG. VALUE (if available)		d. NO. OF ANALYSES	a. CONCENTRATION	b. MASS	a. LONG TERM AVERAGE VALUE		b. NO. OF ANALYSES
				(1) CONCENTRATION	(2) MASS	(1) CONCENTRATION	(2) MASS	(1) CONCENTRATION	(2) MASS				(1) CONCENTRATION	(2) MASS	
GC/MS FRACTION — PESTICIDES *(continued)*															
17P. Heptachlor Epoxide (1024-57-3)			x	NA	NA	NA	NA	NA	NA	NA	ppm	kg/d	NA	NA	NA
18P. PCB-1242 (53469-21-9)			x	NA	NA	NA	NA	NA	NA	NA	ppm	kg/d	NA	NA	NA
19P. PCB-1254 (11097-69-1)			x	NA	NA	NA	NA	NA	NA	NA	ppm	kg/d	NA	NA	NA
20P. PCB-1221 (11104-28-2)			x	NA	NA	NA	NA	NA	NA	NA	ppm	kg/d	NA	NA	NA
21P. PCB-1232 (11141-16-5)			x	NA	NA	NA	NA	NA	NA	NA	ppm	kg/d	NA	NA	NA
22P. PCB-1248 (12672-29-6)			x	NA	NA	NA	NA	NA	NA	NA	ppm	kg/d	NA	NA	NA
23P. PCB-1260 (11096-82-5)			x	NA	NA	NA	NA	NA	NA	NA	ppm	kg/d	NA	NA	NA
24P. PCB-1016 (12674-11-2)			x	NA	NA	NA	NA	NA	NA	NA	ppm	kg/d	NA	NA	NA
25P. Toxaphene (8001-35-2)			x	NA	NA	NA	NA	NA	NA	NA	ppm	kg/d	NA	NA	NA

PLEASE PRINT OR TYPE IN THE UNSHADED AREAS ONLY. You may report some or all of this information on separate sheets *(use the same format)* instead of completing these pages. SEE INSTRUCTIONS.

NORTH ANNA POWER STATION

EPA I.D. NUMBER *(copy from Item 1 of Form 1)*

VAD065376279

Process Waste Clarifier

V. INTAKE AND EFFLUENT CHARACTERISTICS *(continued from page 3 of Form 2-C)*

SEE ADDENDUM FOR MORE INFO.

OUTFALL NO. 103

PART A - You must provide the results of at least one analysis for every pollutant in this table. Complete one table for each outfall. See instructions for additional details.

1. POLLUTANT	2. EFFLUENT a. MAXIMUM DAILY VALUE (1) CONCENTRATION	2. EFFLUENT a. MAXIMUM DAILY VALUE (2) MASS	2. EFFLUENT b. MAXIMUM 30 DAY VALUE (if available) (1) CONCENTRATION	2. EFFLUENT b. MAXIMUM 30 DAY VALUE (if available) (2) MASS	2. EFFLUENT c. LONG TERM AVRG. VALUE (if available) (1) CONCENTRATION	2. EFFLUENT c. LONG TERM AVRG. VALUE (if available) (2) MASS	2. EFFLUENT d. NO. OF ANALYSES	3. UNITS (specify if blank) a. CONCENTRATION	3. UNITS (specify if blank) b. MASS	4. INTAKE (optional) a. LONG TERM AVERAGE VALUE (1) CONCENTRATION	4. INTAKE (optional) a. LONG TERM AVERAGE VALUE (2) MASS	4. INTAKE (optional) b. NO. OF ANALYSES
a. Biochemical Oxygen Demand *(BOD)*	ND	NA	NA	NA	NA	NA	1	ppm	kg/d	NA	NA	NA
b. Chemical Oxygen Demand *(COD)*	7.50	7.4	NA	NA	NA	NA	1	ppm	kg/d	NA	NA	NA
c. Total Organic Carbon *(TOC)*	5.08	5.0	NA	NA	NA	NA	1	ppm	kg/d	NA	NA	NA
d. Total Suspended Solids *(TSS)*	5.3	5.2	4.3	4.2	<1.57	<1.5	25	ppm	kg/d	NA	NA	NA
e. Ammonia *(as N)*	0.9	0.9	NA	NA	NA	NA	1	ppm	kg/d	NA	NA	NA
f. Flow	VALUE 0.30		VALUE 0.29		VALUE * 0.259		24	MGD	NA	VALUE NA		NA
g. Temperature *(winter)*	VALUE NA		VALUE NA		VALUE NA		NA	°C		VALUE NA		NA
h. Temperature *(summer)*	VALUE 27.0		VALUE NA		VALUE NA		1	°C		VALUE NA		NA
i. pH	MINIMUM 6.8	MAXIMUM 7.45	MINIMUM 6.8	MAXIMUM 7.45			24	STANDARD UNITS				

PART B - Mark "X" in column 2-a for each pollutant you know or have reason to believe is present. Mark "X" in column 2-b for each pollutant you believe to be absent. If you mark column 2a for any pollutant which is limited either directly, or indirectly but expressly, in an effluent limitations guideline, you must provide the results of at least one analysis for that pollutant. For other pollutants for which you mark column 2a, you must provide quantitative data or an explanation of their presence in your discharge. Complete one table for each outfall. See the instructions for additional details and requirements.

1. POLLUTANT AND CAS NO. *(if available)*	2. MARK 'X' a. BELIEVED PRESENT	2. MARK 'X' b. BELIEVED ABSENT	3. EFFLUENT a. MAXIMUM DAILY VALUE (1) CONCENTRATION	3. EFFLUENT a. MAXIMUM DAILY VALUE (2) MASS	3. EFFLUENT b. MAXIMUM 30 DAY VALUE (if available) (1) CONCENTRATION	3. EFFLUENT b. MAXIMUM 30 DAY VALUE (if available) (2) MASS	3. EFFLUENT c. LONG TERM AVRG. VALUE (if available) (1) CONCENTRATION	3. EFFLUENT c. LONG TERM AVRG. VALUE (if available) (2) MASS	3. EFFLUENT d. NO. OF ANALYSES	4. UNITS a. CONCENTRATION	4. UNITS b. MASS	5. INTAKE (optional) a. LONG TERM AVERAGE VALUE (1) CONCENTRATION	5. INTAKE (optional) a. LONG TERM AVERAGE VALUE (2) MASS	5. INTAKE (optional) b. NO. OF ANALYSES
a. Bromide (24959-67-9)		X	NA	NA	NA	NA	NA	NA	NA	ppm	kg/d	NA	NA	NA
b. Chlorine, Total Residual	X		0.03	0.03	NA	NA	NA	NA	1	ppm	kg/d	NA	NA	NA
c. Color	X		5	NA	NA	NA	NA	NA	1	color units	NA	NA	NA	NA
d. Fecal Coliform		X	NA	NA	NA	NA	NA	NA	NA	col/100ml	NA	NA	NA	NA
e. Fluoride (16984-48-8)		X	NA	NA	NA	NA	NA	NA	NA	ppm	kg/d	NA	NA	NA
f. Nitrate—Nitrite *(as N)*	X		6.73	6.6	NA	NA	NA	NA	1	ppm	kg/d	NA	NA	NA

CONTINUE ON REVERSE

*** Long term average flow (1999) used to calculate all mass values.**

1. POLLUTANT AND CAS NO. (if available)	2. MARK 'X' a. BELIEVED PRESENT	2. MARK 'X' b. BELIEVED ABSENT	3. EFFLUENT a. MAXIMUM DAILY VALUE (1) CONCENTRATION	a. MAXIMUM DAILY VALUE (2) MASS	b. MAXIMUM 30 DAY VALUE (if available) (1) CONCENTRATION	b. MAXIMUM 30 DAY VALUE (2) MASS	c. LONG TERM AVRG. VALUE (if available) (1) CONCENTRATION	c. LONG TERM AVRG. VALUE (2) MASS	d. NO. OF ANALYSES	4. UNITS a. CONCENTRATION	4. UNITS b. MASS	5. INTAKE (optional) a. LONG TERM AVERAGE VALUE (1) CONCENTRATION	5. INTAKE (optional) a. LONG TERM AVERAGE VALUE (2) MASS	5. INTAKE (optional) b. NO. OF ANALYSES
g. Nitrogen, Total Organic (as N)	x		1.1	1.1	NA	NA	NA	NA	1	ppm	kg/d	NA	NA	NA
h. Oil and Grease		x	6.0	5.9	6.0	5.9	<6	<5.9	24	ppm	kg/d	NA	NA	NA
i. Phosphorus (as P), Total (7723-14-0)	x		2.62	2.57	NA	NA	NA	NA	1	ppm	kg/d	NA	NA	NA
j. Radioactivity														
(1) Alpha, Total	x		6.08	NA	NA	NA	NA	NA	1	pCi/L	NA	NA	NA	NA
(2) Beta, Total	x		255.7	NA	NA	NA	NA	NA	1	pCi/L	NA	NA	NA	NA
(3) Radium, Total		x	<0.48	NA	NA	NA	NA	NA	1	NA	NA	NA	NA	NA
(4) Radium 226, Total		x	<0.82	NA	NA	NA	NA	NA	1	NA	NA	NA	NA	NA
k. Sulfate (as SO_4) (14808-79-8)		x	NA	NA	NA	NA	NA	NA	NA	ppm	kg/d	NA	NA	NA
l. Sulfide (as S)		x	NA	NA	NA	NA	NA	NA	NA	ppm	kg/d	NA	NA	NA
m. Sulfite (as SO_3) (14265-45-3)		x	NA	NA	NA	NA	NA	NA	NA	ppm	kg/d	NA	NA	NA
n. Surfactants	x		0.148	0.1	NA	NA	NA	NA	1	ppm	kg/d	NA	NA	NA
o. Aluminum, Total (7429-90-5)		x	0.0959 B	0.1 B	NA	NA	NA	NA	1	ppm	kg/d	NA	NA	NA
p. Barium, Total (7440-39-3)		x	0.021	0.02	NA	NA	NA	NA	1	ppm	kg/d	NA	NA	NA
q. Boron, Total (7440-42-8)		x	120	117.6	NA	NA	NA	NA	1	ppm	kg/d	NA	NA	NA
r. Cobalt, Total (7440-48-4)		x	0.0111 B	0.01 B	NA	NA	NA	NA	1	ppm	kg/d	NA	NA	NA
s. Iron, Total (7439-89-6)		x	0.136 B	0.1 B	NA	NA	NA	NA	1	ppm	kg/d	NA	NA	NA
t. Magnesium, Total (7439-95-4)		x	1.44	1.4	NA	NA	NA	NA	1	ppm	kg/d	NA	NA	NA
u. Molybdenum, Total (7439-98-7)		x	0.0614 B	0.1 B	NA	NA	NA	NA	1	ppm	kg/d	NA	NA	NA
v. Manganese, Total (7439-96-5)		x	0.0511	0.1	NA	NA	NA	NA	1	ppm	kg/d	NA	NA	NA
w. Tin, Total (7440-31-5)		x	<0.0439	<0.04	NA	NA	NA	NA	1	ppm	kg/d	NA	NA	NA
x. Titanium, Total (7440-32-6)		x	<0.0258	<0.025	NA	NA	NA	NA	1	ppm	kg/d	NA	NA	NA

B - See Footnote on page V-9

CONTINUE ON PAGE V-3

NORTH ANNA POWER STATION

EPA I.D. NUMBER (copy from Item 1 of Form 1)	OUTFALL NUMBER
VAD065376279	103

CONTINUED FROM PAGE 3 OF FORM 2-C

Process Waste Clarifier

PART C - If you are a primary industry and this outfall contains process wastewater, refer to Table 2c-2 in the instructions to determine which of the GC/MS fractions you must test for. Mark "X" in column 2-a for all such GC/MS fractions that apply to your industry and for ALL toxic metals, cyanides, and total phenols. If you are not required to mark column 2-a *(secondary industries, nonprocess wastewater outfalls, and nonrequired GC/MS fractions)*, mark "X" in column 2-b for each pollutant you know or have reason to believe is present. Mark "X" in column 2-c for each pollutant you believe is absent. If you mark column 2a for any pollutant, you must provide the results of at least one analysis for that pollutant. If you mark column 2b for any pollutant, you must provide the results of at least one analysis for that pollutant if you know or have reason to believe it will be discharged in concentrations of 10 ppb or greater. If you mark column 2b for acrolein, acrylonitrile, 2,4 dinitrophenol, or 2-methyl-4, 6 dinitrophenol, you must provide the results of at least one analysis for each of these pollutants which you know or have reason to believe that you discharge in concentrations of 100 ppb or greater. Otherwise, for pollutants for which you mark column 2b, you must either submit at least one analysis or briefly describe the reasons the pollutant is expected to be discharged. Note that there are 7 pages to this part; please review each carefully. Complete one table *(all 7 pages)* for each outfall. See instructions for additional details and requirements.

1. POLLUTANT AND CAS NUMBER (if available)	2. MARK 'X'			3. EFFLUENT							4. UNITS		5. INTAKE (optional)		
	a. TESTING REQUIRED	b. BELIEVED PRESENT	c. BELIEVED ABSENT	a. MAXIMUM DAILY VALUE		b. MAXIMUM 30 DAY VALUE (if available)		c. LONG TERM AVRG. VALUE (if available)		d. NO. OF ANALYSES	a. CONCENTRATION	b. MASS	a. LONG TERM AVERAGE VALUE		b. NO. OF ANALYSES
				(1) CONCENTRATION	(2) MASS	(1) CONCENTRATION	(2) MASS	(1) CONCENTRATION	(2) MASS				(1) CONCENTRATION	(2) MASS	
METALS, CYANIDE, AND TOTAL PHENOLS															
1M. Antimony, Total (7440-36-0)			x	<0.0364	<0.036	NA	NA	NA	NA	1	ppm	kg/d	NA	NA	NA
2M. Arsenic, Total (7440-38-2)			x	0.0135 B	0.01 B	NA	NA	NA	NA	1	ppm	kg/d	NA	NA	NA
3M. Beryllium, Total, 7440-41-7)			x	<0.00023	<0.0002	NA	NA	NA	NA	1	ppm	kg/d	NA	NA	NA
4M. Cadmium, Total (7440-43-9)			x	<0.0019	<0.002	NA	NA	NA	NA	1	ppm	kg/d	NA	NA	NA
5M. Chromium, Total (7440-47-3)			x	<0.0043	<0.004	NA	NA	NA	NA	1	ppm	kg/d	NA	NA	NA
6M. Copper, Total (7440-50-8)			x	0.0442	0.04	NA	NA	NA	NA	1	ppm	kg/d	NA	NA	NA
7M. Lead, Total (7439-92-1)			x	<0.0365	<0.04	NA	NA	NA	NA	1	ppm	kg/d	NA	NA	NA
8M. Mercury, Total (7439-97-6)			x	<0.0002	<0.0002	NA	NA	NA	NA	1	ppm	kg/d	NA	NA	NA
9M. Nickel, Total (7440-02-0)			x	0.0068 B	0.01 B	NA	NA	NA	NA	1	ppm	kg/d	NA	NA	NA
10M. Selenium, Total (7782-49-2)			x	0.0332 B	0.03 B	NA	NA	NA	NA	1	ppm	kg/d	NA	NA	NA
11M. Silver, Total (7440-22-4)			x	<0.005	<0.005	NA	NA	NA	NA	1	ppm	kg/d	NA	NA	NA
12M. Thallium, Total (7440-28-0)			x	<0.06	<0.06	NA	NA	NA	NA	1	ppm	kg/d	NA	NA	NA
13M. Zinc, Total (7440-66-6)			x	0.02 B	0.02 B	NA	NA	NA	NA	1	ppm	kg/d	NA	NA	NA
14M. Cyanide, Total (57-12-5)			x	<0.005	<0.005	NA	NA	NA	NA	1	ppm	kg/d	NA	NA	NA
15M. Phenols, Total			x	<0.05	<0.05	NA	NA	NA	NA	1	ppm	kg/d	NA	NA	NA
DIOXIN															
2,3,7,8 Tetrachlorodibenzo-P-Dioxin (1764-01-6)			x	DESCRIBE RESULTS NA											

B - See Footnote on page V-9

CONTINUE ON REVERSE

1. POLLUTANT AND CAS NUMBER (if available)	2. MARK 'X'			3. EFFLUENT							4. UNITS		5. INTAKE (optional)		
	a. TESTING REQUIRED	b. BELIEVED PRESENT	c. BELIEVED ABSENT	a. MAXIMUM DAILY VALUE		b. MAXIMUM 30 DAY VALUE (if available)		c. LONG TERM AVRG. VALUE (if available)		d. NO. OF ANALYSES	a. CONCENTRATION	b. MASS	a. LONG TERM AVERAGE VALUE		b. NO. OF ANALYSES
				(1) CONCENTRATION	(2) MASS	(1) CONCENTRATION	(2) MASS	(1) CONCENTRATION	(2) MASS				(1) CONCENTRATION	(2) MASS	
GC/MS FRACTION — VOLATILE COMPOUNDS															
1V. Acrolein (107-02-8)			x	ND	NA	NA	NA	NA	NA	1	ppm	kg/d	NA	NA	NA
2V. Acrylonitrile (107-13-1)			x	ND	NA	NA	NA	NA	NA	1	ppm	kg/d	NA	NA	NA
3V. Benzene (71-43-2)			x	ND	NA	NA	NA	NA	NA	1	ppm	kg/d	NA	NA	NA
4V. Bis (Chloromethyl) Ether (542-88-1)			NA	not	required	not	required	not	required	NA	NA	NA	NA	NA	NA
5V. Bromoform (75-25-2)			x	ND	NA	NA	NA	NA	NA	1	ppm	kg/d	NA	NA	NA
6V. Carbon Tetrachloride (56-23-5)			x	ND	NA	NA	NA	NA	NA	1	ppm	kg/d	NA	NA	NA
7V. Chlorobenzene (108-90-7)			x	ND	NA	NA	NA	NA	NA	1	ppm	kg/d	NA	NA	NA
8V. Chlorodibromomethane (124-48-1)			x	ND	NA	NA	NA	NA	NA	1	ppm	kg/d	NA	NA	NA
9V. Chloroethane (75-00-3)			x	ND	NA	NA	NA	NA	NA	1	ppm	kg/d	NA	NA	NA
10V. 2-Chloroethylvinyl Ether (110-75-8)			x	ND	NA	NA	NA	NA	NA	1	ppm	kg/d	NA	NA	NA
11V. Chloroform (67-66-3)			x	ND	NA	NA	NA	NA	NA	1	ppm	kg/d	NA	NA	NA
12V. Dichlorobromomethane (75-27-4)			x	ND	NA	NA	NA	NA	NA	1	ppm	kg/d	NA	NA	NA
13V. Dichlorodifluoromethane (75-71-8)			x	ND	NA	NA	NA	NA	NA	1	ppm	kg/d	NA	NA	NA
14V. 1,1-Dichloroethane (75-34-3)			x	ND	NA	NA	NA	NA	NA	1	ppm	kg/d	NA	NA	NA
15V. 1,2-Dichloroethane (107-06-2)			x	ND	NA	NA	NA	NA	NA	1	ppm	kg/d	NA	NA	NA
16V. 1,1-Dichloroethylene (75-35-4)			x	ND	NA	NA	NA	NA	NA	1	ppm	kg/d	NA	NA	NA
17V. 1,2-Dichloropropane (78-87-5)			x	ND	NA	NA	NA	NA	NA	1	ppm	kg/d	NA	NA	NA
18V. 1,3-Dichloropropylene (542-75-6)			x	*C ND	NA	NA	NA	NA	NA	1	ppm	kg/d	NA	NA	NA
19V. Ethylbenzene (100-41-4)			x	ND	NA	NA	NA	NA	NA	1	ppm	kg/d	NA	NA	NA
20V. Methyl Bromide (74-83-9)			x	ND	NA	NA	NA	NA	NA	1	ppm	kg/d	NA	NA	NA
21V. Methyl Chloride (74-87-3)			x	ND	NA	NA	NA	NA	NA	1	ppm	kg/d	NA	NA	NA

*C - See footnote on page V-9

CONTINUE ON PAGE V-5

NORTH ANNA POWER STATION

EPA I.D. NUMBER (copy from Item 1 of Form 1)	OUTFALL NUMBER
VAD065376279	103

Process Waste Clarifier

CONTINUED FROM PAGE V-4

1. POLLUTANT AND CAS NUMBER (if available)	2. MARK 'X'			3. EFFLUENT							4. UNITS		5. INTAKE (optional)		
	a. TESTING REQUIRED	b. BELIEVED PRESENT	c. BELIEVED ABSENT	a. MAXIMUM DAILY VALUE		b. MAXIMUM 30 DAY VALUE (if available)		c. LONG TERM AVRG. VALUE (if available)		d. NO. OF ANALYSES	a. CONCENTRATION	b. MASS	a. LONG TERM AVERAGE VALUE		b. NO. OF ANALYSES
				(1) CONCENTRATION	(2) MASS	(1) CONCENTRATION	(2) MASS	(1) CONCENTRATION	(2) MASS				(1) CONCENTRATION	(2) MASS	
GC/MS FRACTION — VOLATILE COMPOUNDS *(continued)*															
22V. Methylene Chloride (75-09-2)			x	ND	NA	NA	NA	NA	NA	1	ppm	kg/d	NA	NA	NA
23V. 1,1,2,2-Tetrachloroethane (79-34-5)			x	ND	NA	NA	NA	NA	NA	1	ppm	kg/d	NA	NA	NA
24V. Tetrachloroethylene (127-18-4)			x	ND	NA	NA	NA	NA	NA	1	ppm	kg/d	NA	NA	NA
25V. Toluene (108-88-3)			x	ND	NA	NA	NA	NA	NA	1	ppm	kg/d	NA	NA	NA
26V. 1,2-Trans-Dichloroethylene (156-60-5)			x	ND	NA	NA	NA	NA	NA	1	ppm	kg/d	NA	NA	NA
27V. 1,1,1-Trichloroethane (71-55-6)			x	ND	NA	NA	NA	NA	NA	1	ppm	kg/d	NA	NA	NA
28V. 1,1,2-Trichloroethane (79-00-5)			x	ND	NA	NA	NA	NA	NA	1	ppm	kg/d	NA	NA	NA
29V. Trichloroethylene (79-01-6)			x	ND	NA	NA	NA	NA	NA	1	ppm	kg/d	NA	NA	NA
30V. Trichlorofluoromethane (75-69-4)			x	ND	NA	NA	NA	NA	NA	1	PPM	kg/d	NA	NA	NA
31V. Vinyl Chloride (75-01-4)			x	ND	NA	NA	NA	NA	NA	1	ppm	kg/d	NA	NA	NA
GC/MS FRACTION — ACID COMPOUNDS															
1A. 2-Chlorophenol (95-57-8)			x	ND	NA	NA	NA	NA	NA	1	ppm	kg/d	NA	NA	NA
2A. 2,4-Dichlorophenol (120-83-2)			x	ND	NA	NA	NA	NA	NA	1	ppm	kg/d	NA	NA	NA
3A. 2,4-Dimethylphenol (105-67-9)			x	ND	NA	NA	NA	NA	NA	1	ppm	kg/d	NA	NA	NA
4A. 4,6-Dinitro-O-Cresol (534-52-1)			x	ND	NA	NA	NA	NA	NA	1	ppm	kg/d	NA	NA	NA
5A. 2,4-Dinitrophenol (51-28-5)			x	ND	NA	NA	NA	NA	NA	1	ppm	kg/d	NA	NA	NA
6A. 2-Nitrophenol (88-75-5)			x	ND	NA	NA	NA	NA	NA	1	ppm	kg/d	NA	NA	NA
7A. 4-Nitrophenol (100-02-7)			x	ND	NA	NA	NA	NA	NA	1	ppm	kg/d	NA	NA	NA
8A. P-Chloro-M-Cresol (59-50-7)			x	ND	NA	NA	NA	NA	NA	1	ppm	kg/d	NA	NA	NA
9A. Pentachlorophenol (87-86-5)			x	ND	NA	NA	NA	NA	NA	1	ppm	kg/d	NA	NA	NA
10A. Phenol (108-95-2)			x	ND	NA	NA	NA	NA	NA	1	ppm	kg/d	NA	NA	NA
11A. 2,4,6-Trichlorophenol (88-06-2)			x	ND	NA	NA	NA	NA	NA	1	ppm	kg/d	NA	NA	NA

CONTINUE ON REVERSE

STF ENV441F.9

1. POLLUTANT AND CAS NUMBER (if available)	2. MARK 'X' a. TESTING REQUIRED	b. BELIEVED PRESENT	c. BELIEVED ABSENT	3. EFFLUENT a. MAXIMUM DAILY VALUE (1) CONCENTRATION	(2) MASS	b. MAXIMUM 30 DAY VALUE (if available) (1) CONCENTRATION	(2) MASS	c. LONG TERM AVRG. VALUE (if available) (1) CONCENTRATION	(2) MASS	d. NO. OF ANALYSES	4. UNITS a. CONCENTRATION	b. MASS	5. INTAKE (optional) a. LONG TERM AVERAGE VALUE (1) CONCENTRATION	(2) MASS	b. NO. OF ANALYSES
GC/MS FRACTION — BASE/NEUTRAL COMPOUNDS															
1B. Acenaphthene (83-32-9)			x	ND	NA	NA	NA	NA	NA	1	ppm	kg/d	NA	NA	NA
2B. Acenaphtylene (208-96-8)			x	ND	NA	NA	NA	NA	NA	1	ppm	kg/d	NA	NA	NA
3B. Anthracene (120-12-7)			x	ND	NA	NA	NA	NA	NA	1	ppm	kg/d	NA	NA	NA
4B. Benzidine (92-87-5)			x	ND	NA	NA	NA	NA	NA	1	ppm	kg/d	NA	NA	NA
5B. Benzo *(a)* Anthracene (56-55-3)			x	ND	NA	NA	NA	NA	NA	1	ppm	kg/d	NA	NA	NA
6B. Benzo *(a)* Pyrene (50-32-8)			x	ND	NA	NA	NA	NA	NA	1	ppm	kg/d	NA	NA	NA
7B. 3,4-Benzo-fluoranthene (205-99-2)			x	ND	NA	NA	NA	NA	NA	1	ppm	kg/d	NA	NA	NA
8B. Benzo *(ghi)* Perylene (191-24-2)			x	ND	NA	NA	NA	NA	NA	1	ppm	kg/d	NA	NA	NA
9B. Benzo *(k)* Fluoranthene (207-08-9)			x	ND	NA	NA	NA	NA	NA	1	ppm	kg/d	NA	NA	NA
10B. Bis *(2-Chloro-ethoxy)* Methane (111-91-1)			x	ND	NA	NA	NA	NA	NA	1	ppm	kg/d	NA	NA	NA
11B. Bis *(2-Chloro-ethyl)* Ether (111-44-4)			x	ND	NA	NA	NA	NA	NA	1	ppm	kg/d	NA	NA	NA
12B. Bis *(2-Chloroiso-propyl)* Ether (102-60-1)			x	*D ND	NA	NA	NA	NA	NA	1	ppm	kg/d	NA	NA	NA
13B. Bis *(2-Ethyl-hexyl)* Phthalate (117-81-7)			x	ND	NA	NA	NA	NA	NA	1	ppm	kg/d	NA	NA	NA
14B. 4-Bromo-phenyl Phenyl Ether (101-55-3)			x	ND	NA	NA	NA	NA	NA	1	ppm	kg/d	NA	NA	NA
15B. Butyl Benzyl Phthalate (85-68-7)			x	ND	NA	NA	NA	NA	NA	1	ppm	kg/d	NA	NA	NA
16B. 2-Chloro-naphthalene (91-58-7)			x	ND	NA	NA	NA	NA	NA	1	ppm	kg/d	NA	NA	NA
17B. 4-Chloro-phenyl Phenyl Ether (7005-72-3)			x	ND	NA	NA	NA	NA	NA	1	ppm	kg/d	NA	NA	NA
18B. Chrysene (218-01-9)			x	ND	NA	NA	NA	NA	NA	1	ppm	kg/d	NA	NA	NA
19B. Dibenzo *(a, h)* Anthracene (53-70-3)			x	ND	NA	NA	NA	NA	NA	1	ppm	kg/d	NA	NA	NA
20B. 1,2-Dichloro-benzene (95-50-1)			x	ND	NA	NA	NA	NA	NA	1	ppm	kg/d	NA	NA	NA
21B. 1,3-Dichloro-benzene (541-73-1)			x	ND	NA	NA	NA	NA	NA	1	ppm	kg/d	NA	NA	NA

*D - See footnote on page V-9

CONTINUE ON PAGE V-7

NORTH ANNA POWER STATION

EPA I.D. NUMBER (copy from Item 1 of Form 1)	OUTFALL NUMBER
VAD065376279	103

CONTINUED FROM PAGE V-6

Process Waste Clarifier

1. POLLUTANT AND CAS NUMBER (if available)	2. MARK 'X'			3. EFFLUENT							4. UNITS		5. INTAKE (optional)		
	a. TESTING REQUIRED	b. BELIEVED PRESENT	c. BELIEVED ABSENT	a. MAXIMUM DAILY VALUE		b. MAXIMUM 30 DAY VALUE (if available)		c. LONG TERM AVRG. VALUE (if available)		d. NO. OF ANALYSES	a. CONCENTRATION	b. MASS	a. LONG TERM AVERAGE VALUE		b. NO. OF ANALYSES
				(1) CONCENTRATION	(2) MASS	(1) CONCENTRATION	(2) MASS	(1) CONCENTRATION	(2) MASS				(1) CONCENTRATION	(2) MASS	
GC/MS FRACTION — BASE/NEUTRAL COMPOUNDS (continued)															
22B. 1,4-Dichlorobenzene (106-46-7)			x	ND	NA	NA	NA	NA	NA	1	ppm	kg/d	NA	NA	NA
23B. 3,3'-Dichlorobenzidine (91-94-1)			x	ND	NA	NA	NA	NA	NA	1	ppm	kg/d	NA	NA	NA
24B. Diethyl Phthalate (84-66-2)			x	ND	NA	NA	NA	NA	NA	1	ppm	kg/d	NA	NA	NA
25B. Dimethyl Phthalate (131-11-3)			x	ND	NA	NA	NA	NA	NA	1	ppm	kg/d	NA	NA	NA
26B. Di-N-Butyl Phthalate (84-74-2)			x	ND	NA	NA	NA	NA	NA	1	ppm	kg/d	NA	NA	NA
27B. 2,4-Dinitrotoluene (121-14-2)			x	ND	NA	NA	NA	NA	NA	1	ppm	kg/d	NA	NA	NA
28B. 2,6-Dinitrotoluene (606-20-2)			x	ND	NA	NA	NA	NA	NA	1	ppm	kg/d	NA	NA	NA
29B. Di-N-Octyl Phthalate (117-84-0)			x	ND	NA	NA	NA	NA	NA	1	ppm	kg/d	NA	NA	NA
30B. 1,2-Diphenylhydrazine *(as Azobenzene)* (122-66-7)			x	ND	NA	NA	NA	NA	NA	1	ppm	kg/d	NA	NA	NA
31B. Fluoranthene (206-44-0)			x	ND	NA	NA	NA	NA	NA	1	ppm	kg/d	NA	NA	NA
32B. Fluorene (86-73-7)			x	ND	NA	NA	NA	NA	NA	1	ppm	kg/d	NA	NA	NA
33B. Hexachlorobenzene (118-74-1)			x	ND	NA	NA	NA	NA	NA	1	ppm	kg/d	NA	NA	NA
34B. Hexachlorobutadiene (87-68-3)			x	ND	NA	NA	NA	NA	NA	1	ppm	kg/d	NA	NA	NA
35B. Hexachlorocyclopentadiene (77-47-4)			x	ND	NA	NA	NA	NA	NA	1	ppm	kg/d	NA	NA	NA
36B. Hexachloroethane (67-72-1)			x	ND	NA	NA	NA	NA	NA	1	ppm	kg/d	NA	NA	NA
37B. Indeno *(1,2,3-cd)* Pyrene (193-39-5)			x	ND	NA	NA	NA	NA	NA	1	ppm	kg/d	NA	NA	NA
38B. Isophorone (78-59-1)			x	ND	NA	NA	NA	NA	NA	1	ppm	kg/d	NA	NA	NA
39B. Naphthalene (91-20-3)			x	ND	NA	NA	NA	NA	NA	1	ppm	kg/d	NA	NA	NA
40B. Nitrobenzene (98-95-3)			x	ND	NA	NA	NA	NA	NA	1	ppm	kg/d	NA	NA	NA
41B. N-Nitrosodimethylamine (62-75-9)			x	ND	NA	NA	NA	NA	NA	1	ppm	kg/d	NA	NA	NA
42B. N-Nitrosodi-N-Propylamine (621-64-7)			x	ND	NA	NA	NA	NA	NA	1	ppm	kg/d	NA	NA	NA

CONTINUE ON REVERSE

STF FNV441F 11

1. POLLUTANT AND CAS NUMBER (if available)	2. MARK 'X' a. TESTING REQUIRED	b. BELIEVED PRESENT	c. BELIEVED ABSENT	3. EFFLUENT a. MAXIMUM DAILY VALUE (1) CONCENTRATION	(2) MASS	b. MAXIMUM 30 DAY VALUE (if available) (1) CONCENTRATION	(2) MASS	c. LONG TERM AVRG. VALUE (if available) (1) CONCENTRATION	(2) MASS	d. NO. OF ANALYSES	4. UNITS a. CONCENTRATION	b. MASS	5. INTAKE (optional) a. LONG TERM AVERAGE VALUE (1) CONCENTRATION	(2) MASS	b. NO. OF ANALYSES
GC/MS FRACTION — BASE/NEUTRAL COMPOUNDS *(continued)*															
43B. N-Nitrosodiphenylamine (86-30-6)			x	ND	NA	NA	NA	NA	NA	1	ppm	kg/d	NA	NA	NA
44B. Phenanthrene (85-01-8)			x	ND	NA	NA	NA	NA	NA	1	ppm	kg/d	NA	NA	NA
45B. Pyrene (129-00-0)			x	ND	NA	NA	NA	NA	NA	1	ppm	kg/d	NA	NA	NA
46B. 1,2,4-Trichlorobenzene (120-82-1)			x	ND	NA	NA	NA	NA	NA	1	ppm	kg/d	NA	NA	NA
GC/MS FRACTION — PESTICIDES															
1P. Aldrin (309-00-2)			x	NA	NA	NA	NA	NA	NA	NA	ppm	kg/d	NA	NA	NA
2P. α-BHC (319-84-6)			x	NA	NA	NA	NA	NA	NA	NA	ppm	kg/d	NA	NA	NA
3P. β-BHC (319-85-7)			x	NA	NA	NA	NA	NA	NA	NA	ppm	kg/d	NA	NA	NA
4P. γ-BHC (58-89-9)			x	NA	NA	NA	NA	NA	NA	NA	ppm	kg/d	NA	NA	NA
5P. δ-BHC (319-86-8)			x	NA	NA	NA	NA	NA	NA	NA	ppm	kg/d	NA	NA	NA
6P. Chlordane (57-74-9)			x	NA	NA	NA	NA	NA	NA	NA	ppm	kg/d	NA	NA	NA
7P. 4,4'-DDT (50-29-3)			x	NA	NA	NA	NA	NA	NA	NA	ppm	kg/d	NA	NA	NA
8P. 4,4'-DDE (72-55-9)			x	NA	NA	NA	NA	NA	NA	NA	ppm	kg/d	NA	NA	NA
9P. 4,4'-DDD (72-54-8)			x	NA	NA	NA	NA	NA	NA	NA	ppm	kg/d	NA	NA	NA
10P. Dieldrin (60-57-1)			x	NA	NA	NA	NA	NA	NA	NA	ppm	kg/d	NA	NA	NA
11P. α-Endosulfan (115-29-7)			x	NA	NA	NA	NA	NA	NA	NA	ppm	kg/d	NA	NA	NA
12P. β-Endosulfan (115-29-7)			x	NA	NA	NA	NA	NA	NA	NA	ppm	kg/d	NA	NA	NA
13P. Endosulfan Sulfate (1031-07-8)			x	NA	NA	NA	NA	NA	NA	NA	ppm	kg/d	NA	NA	NA
14P. Endrin (72-20-8)			x	NA	NA	NA	NA	NA	NA	NA	ppm	kg/d	NA	NA	NA
15P. Endrin Aldehyde (7421-93-4)			x	NA	NA	NA	NA	NA	NA	NA	ppm	kg/d	NA	NA	NA
16P. Heptachlor (76-44-8)			x	NA	NA	NA	NA	NA	NA	NA	ppm	kg/d	NA	NA	NA

CONTINUE ON PAGE V-9

NORTH ANNA POWER STATION

EPA I.D. NUMBER (copy from Item 1 of Form 1)	OUTFALL NUMBER
VAD065376279	103

Process Waste Clarifier

CONTINUED FROM PAGE V-8

1. POLLUTANT AND CAS NUMBER (if available)	2. MARK 'X'			3. EFFLUENT							4. UNITS		5. INTAKE (optional)		
	a. TESTING REQUIRED	b. BELIEVED PRESENT	c. BELIEVED ABSENT	a. MAXIMUM DAILY VALUE		b. MAXIMUM 30 DAY VALUE (if available)		c. LONG TERM AVRG. VALUE (if available)		d. NO. OF ANALYSES	a. CONCENTRATION	b. MASS	a. LONG TERM AVERAGE VALUE		b. NO. OF ANALYSES
				(1) CONCENTRATION	(2) MASS	(1) CONCENTRATION	(2) MASS	(1) CONCENTRATION	(2) MASS				(1) CONCENTRATION	(2) MASS	
GC/MS FRACTION — PESTICIDES (continued)															
17P. Heptachlor Epoxide (1024-57-3)			x	NA	NA	NA	NA	NA	NA	NA	ppm	kg/d	NA	NA	NA
18P. PCB-1242 (53469-21-9)			x	NA	NA	NA	NA	NA	NA	NA	ppm	kg/d	NA	NA	NA
19P. PCB-1254 (11097-69-1)			x	NA	NA	NA	NA	NA	NA	NA	ppm	kg/d	NA	NA	NA
20P. PCB-1221 (11104-28-2)			x	NA	NA	NA	NA	NA	NA	NA	ppm	kg/d	NA	NA	NA
21P. PCB-1232 (11141-16-5)			x	NA	NA	NA	NA	NA	NA	NA	ppm	kg/d	NA	NA	NA
22P. PCB-1248 (12672-29-6)			x	NA	NA	NA	NA	NA	NA	NA	ppm	kg/d	NA	NA	NA
23P. PCB-1260 (11096-82-5)			x	NA	NA	NA	NA	NA	NA	NA	ppm	kg/d	NA	NA	NA
24P. PCB-1016 (12674-11-2)			x	NA	NA	NA	NA	NA	NA	NA	ppm	kg/d	NA	NA	NA
25P. Toxaphene (8001-35-2)			x	NA	NA	NA	NA	NA	NA	NA	ppm	kg/d	NA	NA	NA

FOOTNOTES

B - The "B" qualifier is an EPA CPL qualifier used in the case that "the reported value was obtained from a reading the was less than the Contract Required Detection Limit (CRDL) but greater than or equal to the Instrument Detection Limit (IDL)" [ILM04.0]. This was not a CPL report, so the CRDLs are not defined. BWX Technologies (this contract laboratory) uses a quantitation llimit that is 10 times the method detection limit (MDL) for all metals except mercury. For mercury, BWX uses a value that is 3 times the MDL.

C - 1,3-dichloropropylene [542-75-6] was not reported. 1,3-dichloropropylene consists of cis and trans isomers. BWX reported the isomer cis-1,3-dichloropropene [10061-01-5] and the trans-1,3-dichloropropene [10061-01-6] isomer. Both were non-detectable.

D - Bis (2-chloroisopropyl) ether (102-60-1) was not reported. No compound with CAS number 102-61-1 exists in the NIST database of registry numbers. Entering the name "bis (2-chloroisopropyl) ether" in the NIST webbook resulted in "2,2'-oxybis(1-chloropropane) [108-60-1]", which was reported.

PLEASE PRINT OR TYPE IN THE UNSHADED AREAS ONLY. You may report some or all of this information on separate sheets *(use the same format)* instead of completing these pages. SEE INSTRUCTIONS.

NORTH ANNA POWER STATION

EPA I.D. NUMBER *(copy from Item 1 of Form 1)*

VAD065376279

Oil / Water Separator

V. INTAKE AND EFFLUENT CHARACTERISTICS *(continued from page 3 of Form 2-C)*

SEE ADDENDUM FOR MORE INFO.

OUTFALL NO. 104 (013, 014)

PART A - You must provide the results of at least one analysis for every pollutant in this table. Complete one table for each outfall. See instructions for additional details.

1. POLLUTANT	2. EFFLUENT a. MAXIMUM DAILY VALUE (1) CONCENTRATION	a. MAXIMUM DAILY VALUE (2) MASS	b. MAXIMUM 30 DAY VALUE *(if available)* (1) CONCENTRATION	b. MAXIMUM 30 DAY VALUE (2) MASS	c. LONG TERM AVRG. VALUE *(if available)* (1) CONCENTRATION	c. LONG TERM AVRG. VALUE (2) MASS	d. NO. OF ANALYSES	3. UNITS *(specify if blank)* a. CONCENTRATION	3. UNITS b. MASS	4. INTAKE *(optional)* a. LONG TERM AVERAGE VALUE (1) CONCENTRATION	4. INTAKE a. LONG TERM AVERAGE VALUE (2) MASS	b. NO. OF ANALYSES
a. Biochemical Oxygen Demand *(BOD)*	16.92	16.9	NA	NA	NA	NA	1	ppm	kg/d	NA	NA	NA
b. Chemical Oxygen Demand *(COD)*	44.00	44	NA	NA	NA	NA	1	ppm	kg/d	NA	NA	NA
c. Total Organic Carbon *(TOC)*	24.8	24.8	NA	NA	NA	NA	1	ppm	kg/d	NA	NA	NA
d. Total Suspended Solids *(TSS)*	18.2	18.2	12.2	12.2	6.4	6.4	24	ppm	kg/d	NA	NA	NA
e. Ammonia *(as N)*	37.48	37.5	NA	NA	NA	NA	1	ppm	kg/d	NA	NA	NA
f. Flow	VALUE 0.432		VALUE 0.36		VALUE * 0.264		24	MGD	NA	VALUE NA		NA
g. Temperature *(winter)*	VALUE NA		VALUE NA		VALUE NA		NA	°C		VALUE NA		NA
h. Temperature *(summer)*	VALUE 31.7		VALUE NA		VALUE NA		1	°C		VALUE NA		NA
i. pH	MINIMUM 6.8	MAXIMUM 7.45	MINIMUM 6.8	MAXIMUM 7.45			24	STANDARD UNITS				

PART B - Mark "X" in column 2-a for each pollutant you know or have reason to believe is present. Mark "X" in column 2-b for each pollutant you believe to be absent. If you mark column 2a for any pollutant which is limited either directly, or indirectly but expressly, in an effluent limitations guideline, you must provide the results of at least one analysis for that pollutant. For other pollutants for which you mark column 2a, you must provide quantitative data or an explanation of their presence in your discharge. Complete one table for each outfall. See the instructions for additional details and requirements.

1. POLLUTANT AND CAS NO. *(if available)*	2. MARK 'X' a. BELIEVED PRESENT	2. MARK 'X' b. BELIEVED ABSENT	3. EFFLUENT a. MAXIMUM DAILY VALUE (1) CONCENTRATION	a. MAXIMUM DAILY VALUE (2) MASS	b. MAXIMUM 30 DAY VALUE *(if available)* (1) CONCENTRATION	b. MAXIMUM 30 DAY VALUE (2) MASS	c. LONG TERM AVRG. VALUE *(if available)* (1) CONCENTRATION	c. LONG TERM AVRG. VALUE (2) MASS	d. NO. OF ANALYSES	4. UNITS a. CONCENTRATION	4. UNITS b. MASS	5. INTAKE *(optional)* a. LONG TERM AVERAGE VALUE (1) CONCENTRATION	5. INTAKE a. LONG TERM AVERAGE VALUE (2) MASS	b. NO. OF ANALYSES
a. Bromide (24959-67-9)	x		8.08	8.1	NA	NA	NA	NA	1	ppm	kg/d	NA	NA	NA
b. Chlorine, Total Residual		x	ND	NA	NA	NA	NA	NA	1	ppm	kg/d	NA	NA	NA
c. Color	x		60	NA	NA	NA	NA	NA	1	color units	NA	NA	NA	NA
d. Fecal Coliform		x	NA	NA	NA	NA	NA	NA	NA	col/100ml	NA	NA	NA	NA
e. Fluoride (16984-48-8)	x		0.218	0.2	NA	NA	NA	NA	1	ppm	kg/d	NA	NA	NA
f. Nitrate—Nitrite *(as N)*	x		3.29	3.3	NA	NA	NA	NA	1	ppm	kg/d	NA	NA	NA

CONTINUE ON REVERSE

*** Long term average flow (1999) used to calculate all mass values.**

ITEM V-B CONTINUED FROM FRONT

VAD065376279 NORTH ANNA POWER STATION OUTFALL 104 (013, 014) Oil / Water Separator

1. POLLUTANT AND CAS NO. (if available)	2. MARK 'X' a. BELIEVED PRESENT	2. MARK 'X' b. BELIEVED ABSENT	3. EFFLUENT a. MAXIMUM DAILY VALUE (1) CONCENTRATION	a. MAXIMUM DAILY VALUE (2) MASS	b. MAXIMUM 30 DAY VALUE (if available) (1) CONCENTRATION	b. MAXIMUM 30 DAY VALUE (2) MASS	c. LONG TERM AVRG. VALUE (if available) (1) CONCENTRATION	c. LONG TERM AVRG. VALUE (2) MASS	d. NO. OF ANALYSES	4. UNITS a. CONCENTRATION	4. UNITS b. MASS	5. INTAKE (optional) a. LONG TERM AVERAGE VALUE (1) CONCENTRATION	5. INTAKE (optional) a. LONG TERM AVERAGE VALUE (2) MASS	5. INTAKE (optional) b. NO. OF ANALYSES
g. Nitrogen, Total Organic (as N)	X		41.56	41.5	NA	NA	NA	NA	1	ppm	kg/d	NA	NA	NA
h. Oil and Grease	X		17.1	17.1	<11.05	<11.0	<6.2	<6.2	24	ppm	kg/d	NA	NA	NA
i. Phosphorus (as P), Total (7723-14-0)	X		1.39	14	NA	NA	NA	NA	1	ppm	kg/d	NA	NA	NA
j. Radioactivity														
(1) Alpha, Total	X		11.40	NA	NA	NA	NA	NA	1	pCi/L	NA	NA	NA	NA
(2) Beta, Total	X		19.50	NA	NA	NA	NA	NA	1	pCi/L	NA	NA	NA	NA
(3) Radium, Total 228	X		1.80	NA	NA	NA	NA	NA	1	NA	NA	NA	NA	NA
(4) Radium 226, Total	X		2.50	NA	NA	NA	NA	NA	NA	NA	NA	NA	NA	NA
k. Sulfate (as SO_4) (14808-79-8)	X		5.94	5.9	NA	NA	NA	NA	1	ppm	kg/d	NA	NA	NA
l. Sulfide (as S)		X	ND	NA	NA	NA	NA	NA	1	ppm	kg/d	NA	NA	NA
m. Sulfite (as SO_3) (14265-45-3)		X	NA	NA	NA	NA	NA	NA	NA	ppm	kg/d	NA	NA	NA
n. Surfactants		X	ND	NA	NA	NA	NA	NA	1	ppm	kg/d	NA	NA	NA
o. Aluminum, Total (7429-90-5)	X		19.47	19.5	NA	NA	NA	NA	1	ppm	kg/d	NA	NA	NA
p. Barium, Total (7440-39-3)	X		0.072	0.1	NA	NA	NA	NA	1	ppm	kg/d	NA	NA	NA
q. Boron, Total (7440-42-8)	X	X	0.04	0.04	NA	NA	NA	NA	1	ppm	kg/d	NA	NA	NA
r. Cobalt, Total (7440-48-4)		X	ND	NA	NA	NA	NA	NA	1	ppm	kg/d	NA	NA	NA
s. Iron, Total (7439-89-6)	X		0.82	0.8	NA	NA	NA	NA	1	ppm	kg/d	NA	NA	NA
t. Magnesium, Total (7439-95-4)	X		5.30	5.3	NA	NA	NA	NA	1	ppm	kg/d	NA	NA	NA
u. Molybdenum, Total (7439-98-7)	X		0.525	0.525	NA	NA	NA	NA	1	ppm	kg/d	NA	NA	NA
v. Manganese, Total (7439-96-5)	X		0.097	0.097	NA	NA	NA	NA	1	ppm	kg/d	NA	NA	NA
w. Tin, Total (7440-31-5)		X	ND	NA	NA	NA	NA	NA	1	ppm	kg/d	NA	NA	NA
x. Titanium, Total (7440-32-6)	X		0.034	0.03	NA	NA	NA	NA	1	ppm	kg/d	NA	NA	NA

CONTINUE ON PAGE V-3

NORTH ANNA POWER STATION

EPA I.D. NUMBER (copy from Item 1 of Form 1)	OUTFALL NUMBER
VAD065376279	104 (013, 014)

Oil / Water Separator

CONTINUED FROM PAGE 3 OF FORM 2-C

PART C - If you are a primary industry and this outfall contains process wastewater, refer to Table 2c-2 in the instructions to determine which of the GC/MS fractions you must test for. Mark "X" in column 2-a for all such GC/MS fractions that apply to your industry and for ALL toxic metals, cyanides, and total phenols. If you are not required to mark column 2-a *(secondary industries, nonprocess wastewater outfalls, and nonrequired GC/MS fractions)*, mark "X" in column 2-b for each pollutant you know or have reason to believe is present. Mark "X" in column 2-c for each pollutant you believe is absent. If you mark column 2a for any pollutant, you must provide the results of at least one analysis for that pollutant. If you mark column 2b for any pollutant, you must provide the results of at least one analysis for that pollutant if you know or have reason to believe it will be discharged in concentrations of 10 ppb or greater. If you mark column 2b for acrolein, acrylonitrile, 2,4 dinitrophenol, or 2-methyl-4, 6 dinitrophenol, you must provide the results of at least one analysis for each of these pollutants which you know or have reason to believe that you discharge in concentrations of 100 ppb or greater. Otherwise, for pollutants for which you mark column 2b, you must either submit at least one analysis or briefly describe the reasons the pollutant is expected to be discharged. Note that there are 7 pages to this part; please review each carefully. Complete one table *(all 7 pages)* for each outfall. See instructions for additional details and requirements.

1. POLLUTANT AND CAS NUMBER (if available)	2. MARK 'X'			3. EFFLUENT							4. UNITS		5. INTAKE (optional)		
	a. TESTING REQUIRED	b. BELIEVED PRESENT	c. BELIEVED ABSENT	a. MAXIMUM DAILY VALUE		b. MAXIMUM 30 DAY VALUE (if available)		c. LONG TERM AVRG. VALUE (if available)		d. NO. OF ANALYSES	a. CONCENTRATION	b. MASS	a. LONG TERM AVERAGE VALUE		b. NO. OF ANALYSES
				(1) CONCENTRATION	(2) MASS	(1) CONCENTRATION	(2) MASS	(1) CONCENTRATION	(2) MASS				(1) CONCENTRATION	(2) MASS	
METALS, CYANIDE, AND TOTAL PHENOLS															
1M. Antimony, Total (7440-36-0)			x	ND	NA	NA	NA	NA	NA	1	ppm	kg/d	NA	NA	NA
2M. Arsenic, Total (7440-38-2)		x		0.008	0.008	NA	NA	NA	NA	1	ppm	kg/d	NA	NA	NA
3M. Beryllium, Total, 7440-41-7)		x		0.0003	0.0003	NA	NA	NA	NA	1	ppm	kg/d	NA	NA	NA
4M. Cadmium, Total (7440-43-9)			x	ND	ND	NA	NA	NA	NA	1	ppm	kg/d	NA	NA	NA
5M. Chromium, Total (7440-47-3)		x		0.008	0.01	NA	NA	NA	NA	1	ppm	kg/d	NA	NA	NA
6M. Copper, Total (7440-50-8)		x		0.111	0.11	NA	NA	NA	NA	1	ppm	kg/d	NA	NA	NA
7M. Lead, Total (7439-92-1)		x		0.015	0.01	NA	NA	NA	NA	1	ppm	kg/d	NA	NA	NA
8M. Mercury, Total (7439-97-6)			x	ND	NA	NA	NA	NA	NA	1	ppm	kg/d	NA	NA	NA
9M. Nickel, Total (7440-02-0)		x		0.005	0.005	NA	NA	NA	NA	1	ppm	kg/d	NA	NA	NA
10M. Selenium, Total (7782-49-2)			x	ND	NA	NA	NA	NA	NA	1	ppm	kg/d	NA	NA	NA
11M. Silver, Total (7440-22-4)		x		0.0002	0.0002	NA	NA	NA	NA	1	ppm	kg/d	NA	NA	NA
12M. Thallium, Total (7440-28-0)			x	ND	NA	NA	NA	NA	NA	1	ppm	kg/d	NA	NA	NA
13M. Zinc, Total (7440-66-6)		x		0.556	0.56	NA	NA	NA	NA	1	ppm	kg/d	NA	NA	NA
14M. Cyanide, Total (57-12-5)			x	ND	NA	NA	NA	NA	NA	1	ppm	kg/d	NA	NA	NA
15M. Phenols, Total		x		0.84	0.84	NA	NA	NA	NA	1	ppm	kg/d	NA	NA	NA
DIOXIN															
2,3,7,8 Tetrachlorodibenzo-P-Dioxin (1764-01-6)			x	DESCRIBE RESULTS NA											

CONTINUE ON REVERSE

STF ENV441F.7

CONTINUED FROM THE FRONT

VAD065376279 NORTH ANNA POWER STATION Outfall 104 (013, 014) Oil / Water Separator

1. POLLUTANT AND CAS NUMBER (if available)	2. MARK 'X'			3. EFFLUENT							4. UNITS		5. INTAKE (optional)		
	a. TESTING REQUIRED	b. BELIEVED PRESENT	c. BELIEVED ABSENT	a. MAXIMUM DAILY VALUE		b. MAXIMUM 30 DAY VALUE (if available)		c. LONG TERM AVRG. VALUE (if available)		d. NO. OF ANALYSES	a. CONCENTRATION	b. MASS	a. LONG TERM AVERAGE VALUE		b. NO. OF ANALYSES
				(1) CONCENTRATION	(2) MASS	(1) CONCENTRATION	(2) MASS	(1) CONCENTRATION	(2) MASS				(1) CONCENTRATION	(2) MASS	
GC/MS FRACTION — VOLATILE COMPOUNDS															
1V. Acrolein (107-02-8)			x	NA	NA	NA	NA	NA	NA	NA	ppm	kg/d	NA	NA	NA
2V. Acrylonitrile (107-13-1)			x	NA	NA	NA	NA	NA	NA	NA	ppm	kg/d	NA	NA	NA
3V. Benzene (71-43-2)			x	NA	NA	NA	NA	NA	NA	NA	ppm	kg/d	NA	NA	NA
4V. Bis *(Chloromethyl)* Ether (542-88-1)			NA	not	required	not	required	not	required	NA	NA	NA	NA	NA	NA
5V. Bromoform (75-25-2)			x	NA	NA	NA	NA	NA	NA	NA	ppm	kg/d	NA	NA	NA
6V. Carbon Tetrachloride (56-23-5)			x	NA	NA	NA	NA	NA	NA	NA	ppm	kg/d	NA	NA	NA
7V. Chlorobenzene (108-90-7)			x	NA	NA	NA	NA	NA	NA	NA	ppm	kg/d	NA	NA	NA
8V. Chlorodibromomethane (124-48-1)			x	NA	NA	NA	NA	NA	NA	NA	ppm	kg/d	NA	NA	NA
9V. Chloroethane (75-00-3)			x	NA	NA	NA	NA	NA	NA	NA	ppm	kg/d	NA	NA	NA
10V. 2-Chloroethylvinyl Ether (110-75-8)			x	NA	NA	NA	NA	NA	NA	NA	ppm	kg/d	NA	NA	NA
11V. Chloroform (67-66-3)			x	NA	NA	NA	NA	NA	NA	NA	ppm	kg/d	NA	NA	NA
12V. Dichlorobromomethane (75-27-4)			x	NA	NA	NA	NA	NA	NA	NA	ppm	kg/d	NA	NA	NA
13V. Dichlorodifluoromethane (75-71-8)			NA	not	required	not	required	not	required	NA	NA	NA	NA	NA	NA
14V. 1,1-Dichloroethane (75-34-3)			x	NA	NA	NA	NA	NA	NA	NA	ppm	kg/d	NA	NA	NA
15V. 1,2-Dichloroethane (107-06-2)			x	NA	NA	NA	NA	NA	NA	NA	ppm	kg/d	NA	NA	NA
16V. 1,1-Dichloroethylene (75-35-4)			x	NA	NA	NA	NA	NA	NA	NA	ppm	kg/d	NA	NA	NA
17V. 1,2-Dichloropropane (78-87-5)			x	NA	NA	NA	NA	NA	NA	NA	ppm	kg/d	NA	NA	NA
18V. 1,3-Dichloropropylene (542-75-6)			x	NA	NA	NA	NA	NA	NA	NA	ppm	kg/d	NA	NA	NA
19V. Ethylbenzene (100-41-4)			x	NA	NA	NA	NA	NA	NA	NA	ppm	kg/d	NA	NA	NA
20V. Methyl Bromide (74-83-9)			x	NA	NA	NA	NA	NA	NA	NA	ppm	kg/d	NA	NA	NA
21V. Methyl Chloride (74-87-3)			x	NA	NA	NA	NA	NA	NA	NA	ppm	kg/d	NA	NA	NA

CONTINUE ON PAGE V-5

NORTH ANNA POWER STATION

EPA I.D. NUMBER (copy from Item 1 of Form 1)	OUTFALL NUMBER
VAD065376279	104 (013, 014)

Oil / Water Separator

CONTINUED FROM PAGE V-4

1. POLLUTANT AND CAS NUMBER (if available)	2. MARK 'X'			3. EFFLUENT							4. UNITS		5. INTAKE (optional)		
	a. TESTING REQUIRED	b. BELIEVED PRESENT	c. BELIEVED ABSENT	a. MAXIMUM DAILY VALUE		b. MAXIMUM 30 DAY VALUE (if available)		c. LONG TERM AVRG. VALUE (if available)		d. NO. OF ANALYSES	a. CONCENTRATION	b. MASS	a. LONG TERM AVERAGE VALUE		b. NO. OF ANALYSES
				(1) CONCENTRATION	(2) MASS	(1) CONCENTRATION	(2) MASS	(1) CONCENTRATION	(2) MASS				(1) CONCENTRATION	(2) MASS	
GC/MS FRACTION — VOLATILE COMPOUNDS *(continued)*															
22V. Methylene Chloride (75-09-2)			x	NA	NA	NA	NA	NA	NA	NA	ppm	kg/d	NA	NA	NA
23V. 1,1,2,2-Tetrachloroethane (79-34-5)			x	NA	NA	NA	NA	NA	NA	NA	ppm	kg/d	NA	NA	NA
24V. Tetrachloroethylene (127-18-4)			x	NA	NA	NA	NA	NA	NA	NA	ppm	kg/d	NA	NA	NA
25V. Toluene (108-88-3)			x	NA	NA	NA	NA	NA	NA	NA	ppm	kg/d	NA	NA	NA
26V. 1,2-Trans-Dichloroethylene (156-60-5)			x	NA	NA	NA	NA	NA	NA	NA	ppm	kg/d	NA	NA	NA
27V. 1,1,1-Trichloroethane (71-55-6)			x	NA	NA	NA	NA	NA	NA	NA	ppm	kg/d	NA	NA	NA
28V. 1,1,2-Trichloroethane (79-00-5)			x	NA	NA	NA	NA	NA	NA	NA	ppm	kg/d	NA	NA	NA
29V. Trichloroethylene (79-01-6)			x	NA	NA	NA	NA	NA	NA	NA	ppm	kg/d	NA	NA	NA
30V. Trichlorofluoromethane (75-69-4)			NA	not	required	not	required	not	required	NA	NA	NA	NA	NA	NA
31V. Vinyl Chloride (75-01-4)			x	NA	NA	NA	NA	NA	NA	NA	ppm	kg/d	NA	NA	NA
GC/MS FRACTION — ACID COMPOUNDS															
1A. 2-Chlorophenol (95-57-8)			x	NA	NA	NA	NA	NA	NA	NA	ppm	kg/d	NA	NA	NA
2A. 2,4-Dichlorophenol (120-83-2)			x	NA	NA	NA	NA	NA	NA	NA	ppm	kg/d	NA	NA	NA
3A. 2,4-Dimethylphenol (105-67-9)			x	NA	NA	NA	NA	NA	NA	NA	ppm	kg/d	NA	NA	NA
4A. 4,6-Dinitro-O-Cresol (534-52-1)			x	NA	NA	NA	NA	NA	NA	NA	ppm	kg/d	NA	NA	NA
5A. 2,4-Dinitrophenol (51-28-5)			x	NA	NA	NA	NA	NA	NA	NA	ppm	kg/d	NA	NA	NA
6A. 2-Nitrophenol (88-75-5)			x	NA	NA	NA	NA	NA	NA	NA	ppm	kg/d	NA	NA	NA
7A. 4-Nitrophenol (100-02-7)			x	NA	NA	NA	NA	NA	NA	NA	ppm	kg/d	NA	NA	NA
8A. P-Chloro-M-Cresol (59-50-7)			x	NA	NA	NA	NA	NA	NA	NA	ppm	kg/d	NA	NA	NA
9A. Pentachlorophenol (87-86-5)			x	NA	NA	NA	NA	NA	NA	NA	ppm	kg/d	NA	NA	NA
10A. Phenol (108-95-2)			x	NA	NA	NA	NA	NA	NA	NA	ppm	kg/d	NA	NA	NA
11A. 2,4,6-Trichlorophenol (88-06-2)			x	NA	NA	NA	NA	NA	NA	NA	ppm	kg/d	NA	NA	NA

CONTINUE ON REVERSE

STF ENV441F.9

VAD065376279 NORTH ANNA POWER STATION Outfall 104 (013, 014) Oil / Water Separator

1. POLLUTANT AND CAS NUMBER (if available)	2. MARK 'X' a. TESTING REQUIRED	b. BELIEVED PRESENT	c. BELIEVED ABSENT	3. EFFLUENT a. MAXIMUM DAILY VALUE (1) CONCENTRATION	(2) MASS	b. MAXIMUM 30 DAY VALUE (if available) (1) CONCENTRATION	(2) MASS	c. LONG TERM AVRG. VALUE (if available) (1) CONCENTRATION	(2) MASS	d. NO. OF ANALYSES	4. UNITS a. CONCENTRATION	b. MASS	5. INTAKE (optional) a. LONG TERM AVERAGE VALUE (1) CONCENTRATION	(2) MASS	b. NO. OF ANALYSES
GC/MS FRACTION — BASE/NEUTRAL COMPOUNDS															
1B. Acenaphthene (83-32-9)			x	NA	NA	NA	NA	NA	NA	NA	ppm	kg/d	NA	NA	NA
2B. Acenaphtylene (208-96-8)			x	NA	NA	NA	NA	NA	NA	NA	ppm	kg/d	NA	NA	NA
3B. Anthracene (120-12-7)			x	NA	NA	NA	NA	NA	NA	NA	ppm	kg/d	NA	NA	NA
4B. Benzidine (92-87-5)			x	NA	NA	NA	NA	NA	NA	NA	ppm	kg/d	NA	NA	NA
5B. Benzo *(a)* Anthracene (56-55-3)			x	NA	NA	NA	NA	NA	NA	NA	ppm	kg/d	NA	NA	NA
6B. Benzo *(a)* Pyrene (50-32-8)			x	NA	NA	NA	NA	NA	NA	NA	ppm	kg/d	NA	NA	NA
7B. 3,4-Benzo-fluoranthene (205-99-2)			x	NA	NA	NA	NA	NA	NA	NA	ppm	kg/d	NA	NA	NA
8B. Benzo *(ghi)* Perylene (191-24-2)			x	NA	NA	NA	NA	NA	NA	NA	ppm	kg/d	NA	NA	NA
9B. Benzo *(k)* Fluoranthene (207-08-9)			x	NA	NA	NA	NA	NA	NA	NA	ppm	kg/d	NA	NA	NA
10B. Bis *(2-Chloro-ethoxy)* Methane (111-91-1)			x	NA	NA	NA	NA	NA	NA	NA	ppm	kg/d	NA	NA	NA
11B. Bis *(2-Chloro-ethyl)* Ether (111-44-4)			x	NA	NA	NA	NA	NA	NA	NA	ppm	kg/d	NA	NA	NA
12B. Bis *(2-Chloroiso-propyl)* Ether (102-60-1)			x	NA	NA	NA	NA	NA	NA	NA	ppm	kg/d	NA	NA	NA
13B. Bis *(2-Ethyl-hexyl)* Phthalate (117-81-7)			x	NA	NA	NA	NA	NA	NA	NA	ppm	kg/d	NA	NA	NA
14B. 4-Bromo-phenyl Phenyl Ether (101-55-3)			x	NA	NA	NA	NA	NA	NA	NA	ppm	kg/d	NA	NA	NA
15B. Butyl Benzyl Phthalate (85-68-7)			x	NA	NA	NA	NA	NA	NA	NA	ppm	kg/d	NA	NA	NA
16B. 2-Chloro-naphthalene (91-58-7)			x	NA	NA	NA	NA	NA	NA	NA	ppm	kg/d	NA	NA	NA
17B. 4-Chloro-phenyl Phenyl Ether (7005-72-3)			x	NA	NA	NA	NA	NA	NA	NA	ppm	kg/d	NA	NA	NA
18B. Chrysene (218-01-9)			x	NA	NA	NA	NA	NA	NA	NA	ppm	kg/d	NA	NA	NA
19B. Dibenzo *(a, h)* Anthracene (53-70-3)			x	NA	NA	NA	NA	NA	NA	NA	ppm	kg/d	NA	NA	NA
20B. 1,2-Dichloro-benzene (95-50-1)			x	NA	NA	NA	NA	NA	NA	NA	ppm	kg/d	NA	NA	NA
21B. 1,3-Dichloro-benzene (541-73-1)			x	NA	NA	NA	NA	NA	NA	NA	ppm	kg/d	NA	NA	NA

CONTINUE ON PAGE V-7

NORTH ANNA POWER STATION

EPA I.D. NUMBER (copy from Item 1 of Form 1)	OUTFALL NUMBER
VAD065376279	104 (013, 014)

Oil / Water Separator

CONTINUED FROM PAGE V-6

1. POLLUTANT AND CAS NUMBER (if available)	2. MARK 'X'			3. EFFLUENT							4. UNITS		5. INTAKE (optional)		
	a. TESTING REQUIRED	b. BELIEVED PRESENT	c. BELIEVED ABSENT	a. MAXIMUM DAILY VALUE		b. MAXIMUM 30 DAY VALUE (if available)		c. LONG TERM AVRG. VALUE (if available)		d. NO. OF ANALYSES	a. CONCENTRATION	b. MASS	a. LONG TERM AVERAGE VALUE		b. NO. OF ANALYSES
				(1) CONCENTRATION	(2) MASS	(1) CONCENTRATION	(2) MASS	(1) CONCENTRATION	(2) MASS				(1) CONCENTRATION	(2) MASS	
GC/MS FRACTION — BASE/NEUTRAL COMPOUNDS *(continued)*															
22B. 1,4-Dichlorobenzene (106-46-7)			x	NA	NA	NA	NA	NA	NA	NA	ppm	kg/d	NA	NA	NA
23B. 3,3'-Dichlorobenzidine (91-94-1)			x	NA	NA	NA	NA	NA	NA	NA	ppm	kg/d	NA	NA	NA
24B. Diethyl Phthalate (84-66-2)			x	NA	NA	NA	NA	NA	NA	NA	ppm	kg/d	NA	NA	NA
25B. Dimethyl Phthalate (131-11-3)			x	NA	NA	NA	NA	NA	NA	NA	ppm	kg/d	NA	NA	NA
26B. Di-N-Butyl Phthalate (84-74-2)			x	NA	NA	NA	NA	NA	NA	NA	ppm	kg/d	NA	NA	NA
27B. 2,4-Dinitrotoluene (121-14-2)			x	NA	NA	NA	NA	NA	NA	NA	ppm	kg/d	NA	NA	NA
28B. 2,6-Dinitrotoluene (606-20-2)			x	NA	NA	NA	NA	NA	NA	NA	ppm	kg/d	NA	NA	NA
29B. Di-N-Octyl Phthalate (117-84-0)			x	NA	NA	NA	NA	NA	NA	NA	ppm	kg/d	NA	NA	NA
30B. 1,2-Diphenylhydrazine *(as Azobenzene)* (122-66-7)			x	NA	NA	NA	NA	NA	NA	NA	ppm	kg/d	NA	NA	NA
31B. Fluoranthene (206-44-0)			x	NA	NA	NA	NA	NA	NA	NA	ppm	kg/d	NA	NA	NA
32B. Fluorene (86-73-7)			x	NA	NA	NA	NA	NA	NA	NA	ppm	kg/d	NA	NA	NA
33B. Hexachlorobenzene (118-74-1)			x	NA	NA	NA	NA	NA	NA	NA	ppm	kg/d	NA	NA	NA
34B. Hexachlorobutadiene (87-68-3)			x	NA	NA	NA	NA	NA	NA	NA	ppm	kg/d	NA	NA	NA
35B. Hexachlorocyclopentadiene (77-47-4)			x	NA	NA	NA	NA	NA	NA	NA	ppm	kg/d	NA	NA	NA
36B. Hexachloroethane (67-72-1)			x	NA	NA	NA	NA	NA	NA	NA	ppm	kg/d	NA	NA	NA
37B. Indeno *(1,2,3-cd)* Pyrene (193-39-5)			x	NA	NA	NA	NA	NA	NA	NA	ppm	kg/d	NA	NA	NA
38B. Isophorone (78-59-1)			x	NA	NA	NA	NA	NA	NA	NA	ppm	kg/d	NA	NA	NA
39B. Naphthalene (91-20-3)			x	NA	NA	NA	NA	NA	NA	NA	ppm	kg/d	NA	NA	NA
40B. Nitrobenzene (98-95-3)			x	NA	NA	NA	NA	NA	NA	NA	ppm	kg/d	NA	NA	NA
41B. N-Nitrosodimethylamine (62-75-9)			x	NA	NA	NA	NA	NA	NA	NA	ppm	kg/d	NA	NA	NA
42B. N-Nitrosodi-N-Propylamine (621-64-7)			x	NA	NA	NA	NA	NA	NA	NA	ppm	kg/d	NA	NA	NA

CONTINUE ON REVERSE

VAD065376279 NORTH ANNA POWER STATION Outfall 104 (013, 014) Oil / Water Separator

1. POLLUTANT AND CAS NUMBER (if available)	2. MARK 'X'			3. EFFLUENT							4. UNITS		5. INTAKE (optional)		
	a. TESTING REQUIRED	b. BELIEVED PRESENT	c. BELIEVED ABSENT	a. MAXIMUM DAILY VALUE		b. MAXIMUM 30 DAY VALUE (if available)		c. LONG TERM AVRG. VALUE (if available)		d. NO. OF ANALYSES	a. CONCENTRATION	b. MASS	a. LONG TERM AVERAGE VALUE		b. NO. OF ANALYSES
				(1) CONCENTRATION	(2) MASS	(1) CONCENTRATION	(2) MASS	(1) CONCENTRATION	(2) MASS				(1) CONCENTRATION	(2) MASS	
GC/MS FRACTION — BASE/NEUTRAL COMPOUNDS *(continued)*															
43B. N-Nitrosodiphenylamine (86-30-6)			x	NA	NA	NA	NA	NA	NA	NA	ppm	kg/d	NA	NA	NA
44B. Phenanthrene (85-01-8)			x	NA	NA	NA	NA	NA	NA	NA	ppm	kg/d	NA	NA	NA
45B. Pyrene (129-00-0)			x	NA	NA	NA	NA	NA	NA	NA	ppm	kg/d	NA	NA	NA
46B. 1,2,4-Trichlorobenzene (120-82-1)			x	NA	NA	NA	NA	NA	NA	NA	ppm	kg/d	NA	NA	NA
GC/MS FRACTION — PESTICIDES															
1P. Aldrin (309-00-2)			x	NA	NA	NA	NA	NA	NA	NA	ppm	kg/d	NA	NA	NA
2P. α-BHC (319-84-6)			x	NA	NA	NA	NA	NA	NA	NA	ppm	kg/d	NA	NA	NA
3P. β-BHC (319-85-7)			x	NA	NA	NA	NA	NA	NA	NA	ppm	kg/d	NA	NA	NA
4P. γ-BHC (58-89-9)			x	NA	NA	NA	NA	NA	NA	NA	ppm	kg/d	NA	NA	NA
5P. δ-BHC (319-86-8)			x	NA	NA	NA	NA	NA	NA	NA	ppm	kg/d	NA	NA	NA
6P. Chlordane (57-74-9)			x	NA	NA	NA	NA	NA	NA	NA	ppm	kg/d	NA	NA	NA
7P. 4,4'-DDT (50-29-3)			x	NA	NA	NA	NA	NA	NA	NA	ppm	kg/d	NA	NA	NA
8P. 4,4'-DDE (72-55-9)			x	NA	NA	NA	NA	NA	NA	NA	ppm	kg/d	NA	NA	NA
9P. 4,4'-DDD (72-54-8)			x	NA	NA	NA	NA	NA	NA	NA	ppm	kg/d	NA	NA	NA
10P. Dieldrin (60-57-1)			x	NA	NA	NA	NA	NA	NA	NA	ppm	kg/d	NA	NA	NA
11P. α-Endosulfan (115-29-7)			x	NA	NA	NA	NA	NA	NA	NA	ppm	kg/d	NA	NA	NA
12P. β-Endosulfan (115-29-7)			x	NA	NA	NA	NA	NA	NA	NA	ppm	kg/d	NA	NA	NA
13P. Endosulfan Sulfate (1031-07-8)			x	NA	NA	NA	NA	NA	NA	NA	ppm	kg/d	NA	NA	NA
14P. Endrin (72-20-8)			x	NA	NA	NA	NA	NA	NA	NA	ppm	kg/d	NA	NA	NA
15P. Endrin Aldehyde (7421-93-4)			x	NA	NA	NA	NA	NA	NA	NA	ppm	kg/d	NA	NA	NA
16P. Heptachlor (76-44-8)			x	NA	NA	NA	NA	NA	NA	NA	ppm	kg/d	NA	NA	NA

CONTINUE ON PAGE V-9

NORTH ANNA POWER STATION

EPA I.D. NUMBER (copy from Item 1 of Form 1)	OUTFALL NUMBER
VAD065376279	104 (013, 014)

CONTINUED FROM PAGE V-8

Oil / Water Separator

1. POLLUTANT AND CAS NUMBER (if available)	2. MARK 'X'			3. EFFLUENT							4. UNITS		5. INTAKE (optional)		
	a. TESTING REQUIRED	b. BELIEVED PRESENT	c. BELIEVED ABSENT	a. MAXIMUM DAILY VALUE		b. MAXIMUM 30 DAY VALUE (if available)		c. LONG TERM AVRG. VALUE (if available)		d. NO. OF ANALYSES	a. CONCENTRATION	b. MASS	a. LONG TERM AVERAGE VALUE		b. NO. OF ANALYSES
				(1) CONCENTRATION	(2) MASS	(1) CONCENTRATION	(2) MASS	(1) CONCENTRATION	(2) MASS				(1) CONCENTRATION	(2) MASS	
GC/MS FRACTION — PESTICIDES *(continued)*															
17P. Heptachlor Epoxide (1024-57-3)			x	NA	NA	NA	NA	NA	NA	NA	ppm	kg/d	NA	NA	NA
18P. PCB-1242 (53469-21-9)			x	NA	NA	NA	NA	NA	NA	NA	ppm	kg/d	NA	NA	NA
19P. PCB-1254 (11097-69-1)			x	NA	NA	NA	NA	NA	NA	NA	ppm	kg/d	NA	NA	NA
20P. PCB-1221 (11104-28-2)			x	NA	NA	NA	NA	NA	NA	NA	ppm	kg/d	NA	NA	NA
21P. PCB-1232 (11141-16-5)			x	NA	NA	NA	NA	NA	NA	NA	ppm	kg/d	NA	NA	NA
22P. PCB-1248 (12672-29-6)			x	NA	NA	NA	NA	NA	NA	NA	ppm	kg/d	NA	NA	NA
23P. PCB-1260 (11096-82-5)			x	NA	NA	NA	NA	NA	NA	NA	ppm	kg/d	NA	NA	NA
24P. PCB-1016 (12674-11-2)			x	NA	NA	NA	NA	NA	NA	NA	ppm	kg/d	NA	NA	NA
25P. Toxaphene (8001-35-2)			x	NA	NA	NA	NA	NA	NA	NA	ppm	kg/d	NA	NA	NA

PLEASE PRINT OR TYPE IN THE UNSHADED AREAS ONLY. You may report some or all of this information on separate sheets *(use the same format)* instead of completing these pages. SEE INSTRUCTIONS.

NORTH ANNA POWER STATION

EPA I.D. NUMBER *(copy from Item 1 of Form 1)*

VAD065376279

Bearing Cooling Water

V. INTAKE AND EFFLUENT CHARACTERISTICS *(continued from page 3 of Form 2-C)*

SEE ADDENDUM FOR MORE INFO.

OUTFALL NO. 105

PART A - You must provide the results of at least one analysis for every pollutant in this table. Complete one table for each outfall. See instructions for additional details.

1. POLLUTANT	2. EFFLUENT a. MAXIMUM DAILY VALUE (1) CONCENTRATION	2. EFFLUENT a. MAXIMUM DAILY VALUE (2) MASS	2. EFFLUENT b. MAXIMUM 30 DAY VALUE (if available) (1) CONCENTRATION	2. EFFLUENT b. MAXIMUM 30 DAY VALUE (if available) (2) MASS	2. EFFLUENT c. LONG TERM AVRG. VALUE (if available) (1) CONCENTRATION	2. EFFLUENT c. LONG TERM AVRG. VALUE (if available) (2) MASS	2. EFFLUENT d. NO. OF ANALYSES	3. UNITS (specify if blank) a. CONCENTRATION	3. UNITS (specify if blank) b. MASS	4. INTAKE (optional) a. LONG TERM AVERAGE VALUE (1) CONCENTRATION	4. INTAKE (optional) a. LONG TERM AVERAGE VALUE (2) MASS	4. INTAKE (optional) b. NO. OF ANALYSES
a. Biochemical Oxygen Demand *(BOD)*	3.02	1.0	NA	NA	NA	NA	1	ppm	kg/d	NA	NA	NA
b. Chemical Oxygen Demand *(COD)*	40.00	13.6	NA	NA	NA	NA	1	ppm	kg/d	NA	NA	NA
c. Total Organic Carbon *(TOC)*	21.80	7.4	NA	NA	NA	NA	1	ppm	kg/d	NA	NA	NA
d. Total Suspended Solids *(TSS)*	ND	NA	NA	NA	NA	NA	1	ppm	kg/d	NA	NA	NA
e. Ammonia *(as N)*	0.09	0.3	NA	NA	NA	NA	1	ppm	kg/d	NA	NA	NA
f. Flow	VALUE 0.288		VALUE 0.288		VALUE * 0.09		4	MGD	NA	VALUE NA		NA
g. Temperature *(winter)*	VALUE NA		VALUE NA		VALUE NA		NA	°C		VALUE NA		NA
h. Temperature *(summer)*	VALUE 24.5		VALUE NA		VALUE NA		1	°C		VALUE NA		NA
i. pH	MINIMUM 6.89	MAXIMUM 7.60	MINIMUM 6.89	MAXIMUM 7.60			2	STANDARD UNITS				

PART B - Mark "X" in column 2-a for each pollutant you know or have reason to believe is present. Mark "X" in column 2-b for each pollutant you believe to be absent. If you mark column 2a for any pollutant which is limited either directly, or indirectly but expressly, in an effluent limitations guideline, you must provide the results of at least one analysis for that pollutant. For other pollutants for which you mark column 2a, you must provide quantitative data or an explanation of their presence in your discharge. Complete one table for each outfall. See the instructions for additional details and requirements.

1. POLLUTANT AND CAS NO. *(if available)*	2. MARK 'X' a. BELIEVED PRESENT	2. MARK 'X' b. BELIEVED ABSENT	3. EFFLUENT a. MAXIMUM DAILY VALUE (1) CONCENTRATION	3. EFFLUENT a. MAXIMUM DAILY VALUE (2) MASS	3. EFFLUENT b. MAXIMUM 30 DAY VALUE (if available) (1) CONCENTRATION	3. EFFLUENT b. MAXIMUM 30 DAY VALUE (if available) (2) MASS	3. EFFLUENT c. LONG TERM AVRG. VALUE (if available) (1) CONCENTRATION	3. EFFLUENT c. LONG TERM AVRG. VALUE (if available) (2) MASS	3. EFFLUENT d. NO. OF ANALYSES	4. UNITS a. CONCENTRATION	4. UNITS b. MASS	5. INTAKE (optional) a. LONG TERM AVERAGE VALUE (1) CONCENTRATION	5. INTAKE (optional) a. LONG TERM AVERAGE VALUE (2) MASS	5. INTAKE (optional) b. NO. OF ANALYSES
a. Bromide (24959-67-9)	x		21.00	7.1	NA	NA	NA	NA	1	ppm	kg/d	NA	NA	NA
b. Chlorine, Total Residual	x		0.19	0.06	0.19	0.06	<0.13	<0.04	4	ppm	kg/d	NA	NA	NA
c. Color	x		50	NA	NA	NA	NA	NA	1	color units	NA	NA	NA	NA
d. Fecal Coliform		x	NA	NA	NA	NA	NA	NA	NA	col/100ml	NA	NA	NA	NA
e. Fluoride (16984-48-8)	x		0.611	0.21	NA	NA	NA	NA	1	ppm	kg/d	NA	NA	NA
f. Nitrate—Nitrite *(as N)*	x		6.76	2.3	NA	NA	NA	NA	1	ppm	kg/d	NA	NA	NA

CONTINUE ON REVERSE

*** Long term average flow (1999) used to calculate all mass values.**

ITEM V-B CONTINUED FROM FRONT

VAD065376279 NORTH ANNA POWER STATION OUTFALL 105 Bearing Cooling Water

1. POLLUTANT AND CAS NO. (if available)	2. MARK 'X'		3. EFFLUENT							4. UNITS		5. INTAKE (optional)		
	a. BELIEVED PRESENT	b. BELIEVED ABSENT	a. MAXIMUM DAILY VALUE		b. MAXIMUM 30 DAY VALUE (if available)		c. LONG TERM AVRG. VALUE (if available)		d. NO. OF ANALYSES	a. CONCENTRATION	b. MASS	a. LONG TERM AVERAGE VALUE		b. NO. OF ANALYSES
			(1) CONCENTRATION	(2) MASS	(1) CONCENTRATION	(2) MASS	(1) CONCENTRATION	(2) MASS				(1) CONCENTRATION	(2) MASS	
g. Nitrogen, Total Organic (as N)	x		4.70	1.6	NA	NA	NA	NA	1	ppm	kg/d	NA	NA	NA
h. Oil and Grease		x	ND	NA	NA	NA	NA	NA	1	ppm	kg/d	NA	NA	NA
i. Phosphorus (as P), Total (7723-14-0)	x		8.32	2.8	NA	NA	NA	NA	1	ppm	kg/d	NA	NA	NA
j. Radioactivity														
(1) Alpha, Total	x		2.00	NA	NA	NA	NA	NA	1	pCi/L	NA	NA	NA	NA
(2) Beta, Total	x		16.60	NA	NA	NA	NA	NA	1	pCi/L	NA	NA	NA	NA
(3) Radium, Total		x	NA	NA	NA	NA	NA	NA	NA	NA	NA	NA	NA	NA
(4) Radium 226, Total		x	NA	NA	NA	NA	NA	NA	NA	NA	NA	NA	NA	NA
k. Sulfate (as SO_4) (14808-79-8)	x		98.81	33.7	NA	NA	NA	NA	1	ppm	kg/d	NA	NA	NA
l. Sulfide (as S)	x		0.03	0.01	NA	NA	NA	NA	1	ppm	kg/d	NA	NA	NA
m. Sulfite (as SO_3) (14265-45-3)		x	NA	NA	NA	NA	NA	NA	NA	ppm	kg/d	NA	NA	NA
n. Surfactants		x	ND	NA	NA	NA	NA	NA	1	ppm	kg/d	NA	NA	NA
o. Aluminum, Total (7429-90-5)	x		0.900	0.31	NA	NA	NA	NA	1	ppm	kg/d	NA	NA	NA
p. Barium, Total (7440-39-3)	x		0.151	0.05	NA	NA	NA	NA	1	ppm	kg/d	NA	NA	NA
q. Boron, Total (7440-42-8)	x		0.17	0.06	NA	NA	NA	NA	1	ppm	kg/d	NA	NA	NA
r. Cobalt, Total (7440-48-4)		x	ND	NA	NA	NA	NA	NA	1	ppm	kg/d	NA	NA	NA
s. Iron, Total (7439-89-6)	x		0.94	0.32	NA	NA	NA	NA	1	ppm	kg/d	NA	NA	NA
t. Magnesium, Total (7439-95-4)	x		14.41	4.82	NA	NA	NA	NA	1	ppm	kg/d	NA	NA	NA
u. Molybdenum, Total (7439-98-7)	x		0.013	0.004	NA	NA	NA	NA	1	ppm	kg/d	NA	NA	NA
v. Manganese, Total (7439-96-5)	x		0.214	0.07	NA	NA	NA	NA	1	ppm	kg/d	NA	NA	NA
w. Tin, Total (7440-31-5)		x	ND	NA	NA	NA	NA	NA	1	ppm	kg/d	NA	NA	NA
x. Titanium, Total (7440-32-6)	x		0.022	0.007	NA	NA	NA	NA	1	ppm	kg/d	NA	NA	NA

CONTINUE ON PAGE V-3

NORTH ANNA POWER STATION

EPA I.D. NUMBER (copy from Item 1 of Form 1)	OUTFALL NUMBER
VAD065376279	105

Bearing Cooling Water

CONTINUED FROM PAGE 3 OF FORM 2-C

PART C - If you are a primary industry and this outfall contains process wastewater, refer to Table 2c-2 in the instructions to determine which of the GC/MS fractions you must test for. Mark "X" in column 2-a for all such GC/MS fractions that apply to your industry and for ALL toxic metals, cyanides, and total phenols. If you are not required to mark column 2-a *(secondary industries, nonprocess wastewater outfalls, and nonrequired GC/MS fractions)*, mark "X" in column 2-b for each pollutant you know or have reason to believe is present. Mark "X" in column 2-c for each pollutant you believe is absent. If you mark column 2a for any pollutant, you must provide the results of at least one analysis for that pollutant. If you mark column 2b for any pollutant, you must provide the results of at least one analysis for that pollutant if you know or have reason to believe it will be discharged in concentrations of 10 ppb or greater. If you mark column 2b for acrolein, acrylonitrile, 2,4 dinitrophenol, or 2-methyl-4, 6 dinitrophenol, you must provide the results of at least one analysis for each of these pollutants which you know or have reason to believe that you discharge in concentrations of 100 ppb or greater. Otherwise, for pollutants for which you mark column 2b, you must either submit at least one analysis or briefly describe the reasons the pollutant is expected to be discharged. Note that there are 7 pages to this part; please review each carefully. Complete one table *(all 7 pages)* for each outfall. See instructions for additional details and requirements.

1. POLLUTANT AND CAS NUMBER (if available)	2. MARK 'X'			3. EFFLUENT							4. UNITS		5. INTAKE (optional)		
	a. TESTING REQUIRED	b. BELIEVED PRESENT	c. BELIEVED ABSENT	a. MAXIMUM DAILY VALUE		b. MAXIMUM 30 DAY VALUE (if available)		c. LONG TERM AVRG. VALUE (if available)		d. NO. OF ANALYSES	a. CONCENTRATION	b. MASS	a. LONG TERM AVERAGE VALUE		b. NO. OF ANALYSES
				(1) CONCENTRATION	(2) MASS	(1) CONCENTRATION	(2) MASS	(1) CONCENTRATION	(2) MASS				(1) CONCENTRATION	(2) MASS	
METALS, CYANIDE, AND TOTAL PHENOLS															
1M. Antimony, Total (7440-36-0)			x	ND	NA	NA	NA	NA	NA	1	ppm	kg/d	NA	NA	NA
2M. Arsenic, Total (7440-38-2)		x		0.008	0.003	NA	NA	NA	NA	1	ppm	kg/d	NA	NA	NA
3M. Beryllium, Total, 7440-41-7)		x		0.0004	0.0001	NA	NA	NA	NA	1	ppm	kg/d	NA	NA	NA
4M. Cadmium, Total (7440-43-9)			x	ND	NA	NA	NA	NA	NA	1	ppm	kg/d	NA	NA	NA
5M. Chromium, Total (7440-47-3)			x	0.009	0.003	0.009	0.003	<0.103	<0.03	3	ppm	kg/d	NA	NA	NA
6M. Copper, Total (7440-50-8)		x		0.092	0.031	NA	NA	NA	NA	1	ppm	kg/d	NA	NA	NA
7M. Lead, Total (7439-92-1)		x		0.004	0.001	NA	NA	NA	NA	1	ppm	kg/d	NA	NA	NA
8M. Mercury, Total (7439-97-6)			x	ND	NA	NA	NA	NA	NA	1	ppm	kg/d	NA	NA	NA
9M. Nickel, Total (7440-02-0)		x		0.007	0.002	NA	NA	NA	NA	1	ppm	kg/d	NA	NA	NA
10M. Selenium, Total (7782-49-2)			x	ND	NA	NA	NA	NA	NA	1	ppm	kg/d	NA	NA	NA
11M. Silver, Total (7440-22-4)			x	ND	NA	NA	NA	NA	NA	1	ppm	kg/d	NA	NA	NA
12M. Thallium, Total (7440-28-0)			x	ND	NA	NA	NA	NA	NA	1	ppm	kg/d	NA	NA	NA
13M. Zinc, Total (7440-66-6)		x		0.928	0.32	0.928	0.32	0.76	0.26	3	ppm	kg/d	NA	NA	NA
14M. Cyanide, Total (57-12-5)			x	ND	NA	NA	NA	NA	NA	1	ppm	kg/d	NA	NA	NA
15M. Phenols, Total		x		0.01	0.003	NA	NA	NA	NA	1	ppm	kg/d	NA	NA	NA
DIOXIN															
2,3,7,8 Tetrachlorodibenzo-P-Dioxin (1764-01-6)			x	DESCRIBE RESULTS NA											

CONTINUE ON REVERSE

STF ENV441F.7

VAD065376279 NORTH ANNA POWER STATION OUTFALL 105 Bearing Cooling Water

1. POLLUTANT AND CAS NUMBER (if available)	2. MARK 'X' a. TESTING REQUIRED	b. BELIEVED PRESENT	c. BELIEVED ABSENT	3. EFFLUENT a. MAXIMUM DAILY VALUE (1) CONCENTRATION	(2) MASS	b. MAXIMUM 30 DAY VALUE (if available) (1) CONCENTRATION	(2) MASS	c. LONG TERM AVRG. VALUE (if available) (1) CONCENTRATION	(2) MASS	d. NO. OF ANALYSES	4. UNITS a. CONCENTRATION	b. MASS	5. INTAKE (optional) a. LONG TERM AVERAGE VALUE (1) CONCENTRATION	(2) MASS	b. NO. OF ANALYSES
GC/MS FRACTION — VOLATILE COMPOUNDS															
1V. Acrolein (107-02-8)			x	ND	NA	NA	NA	NA	NA	1	ppm	kg/d	NA	NA	NA
2V. Acrylonitrile (107-13-1)			x	ND	NA	NA	NA	NA	NA	1	ppm	kg/d	NA	NA	NA
3V. Benzene (71-43-2)			x	ND	NA	NA	NA	NA	NA	1	ppm	kg/d	NA	NA	NA
4V. Bis (*Chloromethyl*) Ether (542-88-1)			NA	not	required	not	required	not	required	NA	NA	NA	NA	NA	NA
5V. Bromoform (75-25-2)			x	ND	NA	NA	NA	NA	NA	1	ppm	kg/d	NA	NA	NA
6V. Carbon Tetrachloride (56-23-5)			x	ND	NA	NA	NA	NA	NA	1	ppm	kg/d	NA	NA	NA
7V. Chlorobenzene (108-90-7)			x	ND	NA	NA	NA	NA	NA	1	ppm	kg/d	NA	NA	NA
8V. Chlorodibromomethane (124-48-1)			x	ND	NA	NA	NA	NA	NA	1	ppm	kg/d	NA	NA	NA
9V. Chloroethane (75-00-3)			x	ND	NA	NA	NA	NA	NA	1	ppm	kg/d	NA	NA	NA
10V. 2-Chloroethylvinyl Ether (110-75-8)			x	ND	NA	NA	NA	NA	NA	1	ppm	kg/d	NA	NA	NA
11V. Chloroform (67-66-3)			x	ND	NA	NA	NA	NA	NA	1	ppm	kg/d	NA	NA	NA
12V. Dichlorobromomethane (75-27-4)			x	ND	NA	NA	NA	NA	NA	1	ppm	kg/d	NA	NA	NA
13V. Dichlorodifluoromethane (75-71-8)			NA	not	required	not	required	not	required	NA	NA	NA	NA	NA	NA
14V. 1,1-Dichloroethane (75-34-3)			x	ND	NA	NA	NA	NA	NA	1	ppm	kg/d	NA	NA	NA
15V. 1,2-Dichloroethane (107-06-2)			x	ND	NA	NA	NA	NA	NA	1	ppm	kg/d	NA	NA	NA
16V. 1,1-Dichloroethylene (75-35-4)			x	ND	NA	NA	NA	NA	NA	1	ppm	kg/d	NA	NA	NA
17V. 1,2-Dichloropropane (78-87-5)			x	ND	NA	NA	NA	NA	NA	1	ppm	kg/d	NA	NA	NA
18V. 1,3-Dichloropropylene (542-75-6)			x	ND	NA	NA	NA	NA	NA	1	ppm	kg/d	NA	NA	NA
19V. Ethylbenzene (100-41-4)			x	ND	NA	NA	NA	NA	NA	1	ppm	kg/d	NA	NA	NA
20V. Methyl Bromide (74-83-9)			x	ND	NA	NA	NA	NA	NA	1	ppm	kg/d	NA	NA	NA
21V. Methyl Chloride (74-87-3)			x	ND	NA	NA	NA	NA	NA	1	ppm	kg/d	NA	NA	NA

CONTINUE ON PAGE V-5

NORTH ANNA POWER STATION

EPA I.D. NUMBER (copy from Item 1 of Form 1)	OUTFALL NUMBER
VAD065376279	105

Bearing Cooling Water

CONTINUED FROM PAGE V-4

1. POLLUTANT AND CAS NUMBER (if available)	2. MARK 'X'			3. EFFLUENT							4. UNITS		5. INTAKE (optional)		
	a. TESTING REQUIRED	b. BELIEVED PRESENT	c. BELIEVED ABSENT	a. MAXIMUM DAILY VALUE		b. MAXIMUM 30 DAY VALUE (if available)		c. LONG TERM AVRG. VALUE (if available)		d. NO. OF ANALYSES	a. CONCENTRATION	b. MASS	a. LONG TERM AVERAGE VALUE		b. NO. OF ANALYSES
				(1) CONCENTRATION	(2) MASS	(1) CONCENTRATION	(2) MASS	(1) CONCENTRATION	(2) MASS				(1) CONCENTRATION	(2) MASS	
GC/MS FRACTION — VOLATILE COMPOUNDS *(continued)*															
22V. Methylene Chloride (75-09-2)			x	ND	NA	NA	NA	NA	NA	1	ppm	kg/d	NA	NA	NA
23V. 1,1,2,2-Tetrachloroethane (79-34-5)			x	ND	NA	NA	NA	NA	NA	1	ppm	kg/d	NA	NA	NA
24V. Tetrachloroethylene (127-18-4)			x	ND	NA	NA	NA	NA	NA	1	ppm	kg/d	NA	NA	NA
25V. Toluene (108-88-3)			x	ND	NA	NA	NA	NA	NA	1	ppm	kg/d	NA	NA	NA
26V. 1,2-Trans-Dichloroethylene (156-60-5)			x	ND	NA	NA	NA	NA	NA	1	ppm	kg/d	NA	NA	NA
27V. 1,1,1-Trichloroethane (71-55-6)			x	ND	NA	NA	NA	NA	NA	1	ppm	kg/d	NA	NA	NA
28V. 1,1,2-Trichloroethane (79-00-5)			x	ND	NA	NA	NA	NA	NA	1	ppm	kg/d	NA	NA	NA
29V. Trichloroethylene (79-01-6)			x	ND	NA	NA	NA	NA	NA	1	ppm	kg/d	NA	NA	NA
30V. Trichlorofluoromethane (75-69-4)			NA	not	required	not	required	not	required	NA	NA	NA	NA	NA	NA
31V. Vinyl Chloride (75-01-4)			x	ND	NA	NA	NA	NA	NA	1	ppm	kg/d	NA	NA	NA
GC/MS FRACTION — ACID COMPOUNDS															
1A. 2-Chlorophenol (95-57-8)			x	ND	NA	NA	NA	NA	NA	1	ppm	kg/d	NA	NA	NA
2A. 2,4-Dichlorophenol (120-83-2)			x	ND	NA	NA	NA	NA	NA	1	ppm	kg/d	NA	NA	NA
3A. 2,4-Dimethylphenol (105-67-9)			x	ND	NA	NA	NA	NA	NA	1	ppm	kg/d	NA	NA	NA
4A. 4,6-Dinitro-O-Cresol (534-52-1)			x	ND	NA	NA	NA	NA	NA	1	ppm	kg/d	NA	NA	NA
5A. 2,4-Dinitrophenol (51-28-5)			x	ND	NA	NA	NA	NA	NA	1	ppm	kg/d	NA	NA	NA
6A. 2-Nitrophenol (88-75-5)			x	ND	NA	NA	NA	NA	NA	1	ppm	kg/d	NA	NA	NA
7A. 4-Nitrophenol (100-02-7)			x	ND	NA	NA	NA	NA	NA	1	ppm	kg/d	NA	NA	NA
8A. P-Chloro-M-Cresol (59-50-7)			x	ND	NA	NA	NA	NA	NA	1	ppm	kg/d	NA	NA	NA
9A. Pentachlorophenol (87-86-5)			x	ND	NA	NA	NA	NA	NA	1	ppm	kg/d	NA	NA	NA
10A. Phenol (108-95-2)			x	ND	NA	NA	NA	NA	NA	1	ppm	kg/d	NA	NA	NA
11A. 2,4,6-Trichlorophenol (88-06-2)			x	ND	NA	NA	NA	NA	NA	1	ppm	kg/d	NA	NA	NA

CONTINUE ON REVERSE

STF ENV441F.9

VAD065376279 NORTH ANNA POWER STATION OUTFALL 105 Bearing Cooling Water

1. POLLUTANT AND CAS NUMBER (if available)	2. MARK 'X' a. TESTING REQUIRED	b. BELIEVED PRESENT	c. BELIEVED ABSENT	3. EFFLUENT a. MAXIMUM DAILY VALUE (1) CONCENTRATION	(2) MASS	b. MAXIMUM 30 DAY VALUE (if available) (1) CONCENTRATION	(2) MASS	c. LONG TERM AVRG. VALUE (if available) (1) CONCENTRATION	(2) MASS	d. NO. OF ANALYSES	4. UNITS a. CONCENTRATION	b. MASS	5. INTAKE (optional) a. LONG TERM AVERAGE VALUE (1) CONCENTRATION	(2) MASS	b. NO. OF ANALYSES
GC/MS FRACTION — BASE/NEUTRAL COMPOUNDS															
1B. Acenaphthene (83-32-9)			x	ND	NA	NA	NA	NA	NA	1	ppm	kg/d	NA	NA	NA
2B. Acenaphtylene (208-96-8)			x	ND	NA	NA	NA	NA	NA	1	ppm	kg/d	NA	NA	NA
3B. Anthracene (120-12-7)			x	ND	NA	NA	NA	NA	NA	1	ppm	kg/d	NA	NA	NA
4B. Benzidine (92-87-5)			x	ND	NA	NA	NA	NA	NA	1	ppm	kg/d	NA	NA	NA
5B. Benzo *(a)* Anthracene (56-55-3)			x	ND	NA	NA	NA	NA	NA	1	ppm	kg/d	NA	NA	NA
6B. Benzo *(a)* Pyrene (50-32-8)			x	ND	NA	NA	NA	NA	NA	1	ppm	kg/d	NA	NA	NA
7B. 3,4-Benzo-fluoranthene (205-99-2)			x	ND	NA	NA	NA	NA	NA	1	ppm	kg/d	NA	NA	NA
8B. Benzo *(ghi)* Perylene (191-24-2)			x	ND	NA	NA	NA	NA	NA	1	ppm	kg/d	NA	NA	NA
9B. Benzo *(k)* Fluoranthene (207-08-9)			x	ND	NA	NA	NA	NA	NA	1	ppm	kg/d	NA	NA	NA
10B. Bis *(2-Chloro-ethoxy)* Methane (111-91-1)			x	ND	NA	NA	NA	NA	NA	1	ppm	kg/d	NA	NA	NA
11B. Bis *(2-Chloro-ethyl)* Ether (111-44-4)			x	ND	NA	NA	NA	NA	NA	1	ppm	kg/d	NA	NA	NA
12B. Bis *(2-Chloroiso-propyl)* Ether (102-60-1)			x	ND	NA	NA	NA	NA	NA	1	ppm	kg/d	NA	NA	NA
13B. Bis *(2-Ethyl-hexyl)* Phthalate (117-81-7)			x	ND	NA	NA	NA	NA	NA	1	ppm	kg/d	NA	NA	NA
14B. 4-Bromo-phenyl Phenyl Ether (101-55-3)			x	ND	NA	NA	NA	NA	NA	1	ppm	kg/d	NA	NA	NA
15B. Butyl Benzyl Phthalate (85-68-7)			x	ND	NA	NA	NA	NA	NA	1	ppm	kg/d	NA	NA	NA
16B. 2-Chloro-naphthalene (91-58-7)			x	ND	NA	NA	NA	NA	NA	1	ppm	kg/d	NA	NA	NA
17B. 4-Chloro-phenyl Phenyl Ether (7005-72-3)			x	ND	NA	NA	NA	NA	NA	1	ppm	kg/d	NA	NA	NA
18B. Chrysene (218-01-9)			x	ND	NA	NA	NA	NA	NA	1	ppm	kg/d	NA	NA	NA
19B. Dibenzo *(a, h)* Anthracene (53-70-3)			x	ND	NA	NA	NA	NA	NA	1	ppm	kg/d	NA	NA	NA
20B. 1,2-Dichloro-benzene (95-50-1)			x	ND	NA	NA	NA	NA	NA	1	ppm	kg/d	NA	NA	NA
21B. 1,3-Dichloro-benzene (541-73-1)			x	ND	NA	NA	NA	NA	NA	1	ppm	kg/d	NA	NA	NA

CONTINUE ON PAGE V-7

NORTH ANNA POWER STATION

EPA I.D. NUMBER (copy from Item 1 of Form 1)	OUTFALL NUMBER
VAD065376279	105

Bearing Cooling Water

CONTINUED FROM PAGE V-6

1. POLLUTANT AND CAS NUMBER (if available)	2. MARK 'X'			3. EFFLUENT							4. UNITS		5. INTAKE (optional)		
	a. TESTING REQUIRED	b. BELIEVED PRESENT	c. BELIEVED ABSENT	a. MAXIMUM DAILY VALUE		b. MAXIMUM 30 DAY VALUE (if available)		c. LONG TERM AVRG. VALUE (if available)		d. NO. OF ANALYSES	a. CONCENTRATION	b. MASS	a. LONG TERM AVERAGE VALUE		b. NO. OF ANALYSES
				(1) CONCENTRATION	(2) MASS	(1) CONCENTRATION	(2) MASS	(1) CONCENTRATION	(2) MASS				(1) CONCENTRATION	(2) MASS	
GC/MS FRACTION — BASE/NEUTRAL COMPOUNDS *(continued)*															
22B. 1,4-Dichlorobenzene (106-46-7)			x	ND	NA	NA	NA	NA	NA	1	ppm	kg/d	NA	NA	NA
23B. 3,3'-Dichlorobenzidine (91-94-1)			x	ND	NA	NA	NA	NA	NA	1	ppm	kg/d	NA	NA	NA
24B. Diethyl Phthalate (84-66-2)			x	ND	NA	NA	NA	NA	NA	1	ppm	kg/d	NA	NA	NA
25B. Dimethyl Phthalate (131-11-3)			x	ND	NA	NA	NA	NA	NA	1	ppm	kg/d	NA	NA	NA
26B. Di-N-Butyl Phthalate (84-74-2)			x	ND	NA	NA	NA	NA	NA	1	ppm	kg/d	NA	NA	NA
27B. 2,4-Dinitrotoluene (121-14-2)			x	ND	NA	NA	NA	NA	NA	1	ppm	kg/d	NA	NA	NA
28B. 2,6-Dinitrotoluene (606-20-2)			x	ND	NA	NA	NA	NA	NA	1	ppm	kg/d	NA	NA	NA
29B. Di-N-Octyl Phthalate (117-84-0)			x	ND	NA	NA	NA	NA	NA	1	ppm	kg/d	NA	NA	NA
30B. 1,2-Diphenylhydrazine *(as Azobenzene)* (122-66-7)			x	ND	NA	NA	NA	NA	NA	1	ppm	kg/d	NA	NA	NA
31B. Fluoranthene (206-44-0)			x	ND	NA	NA	NA	NA	NA	1	ppm	kg/d	NA	NA	NA
32B. Fluorene (86-73-7)			x	ND	NA	NA	NA	NA	NA	1	ppm	kg/d	NA	NA	NA
33B. Hexachlorobenzene (118-74-1)			x	ND	NA	NA	NA	NA	NA	1	ppm	kg/d	NA	NA	NA
34B. Hexachlorobutadiene (87-68-3)			x	ND	NA	NA	NA	NA	NA	1	ppm	kg/d	NA	NA	NA
35B. Hexachlorocyclopentadiene (77-47-4)			x	ND	NA	NA	NA	NA	NA	1	ppm	kg/d	NA	NA	NA
36B. Hexachloroethane (67-72-1)			x	ND	NA	NA	NA	NA	NA	1	ppm	kg/d	NA	NA	NA
37B. Indeno *(1,2,3-cd)* Pyrene (193-39-5)			x	ND	NA	NA	NA	NA	NA	1	ppm	kg/d	NA	NA	NA
38B. Isophorone (78-59-1)			x	ND	NA	NA	NA	NA	NA	1	ppm	kg/d	NA	NA	NA
39B. Naphthalene (91-20-3)			x	ND	NA	NA	NA	NA	NA	1	ppm	kg/d	NA	NA	NA
40B. Nitrobenzene (98-95-3)			x	ND	NA	NA	NA	NA	NA	1	ppm	kg/d	NA	NA	NA
41B. N-Nitrosodimethylamine (62-75-9)			x	ND	NA	NA	NA	NA	NA	1	ppm	kg/d	NA	NA	NA
42B. N-Nitrosodi-N-Propylamine (621-64-7)			x	ND	NA	NA	NA	NA	NA	1	ppm	kg/d	NA	NA	NA

CONTINUE ON REVERSE

STF ENV441F.11

1. POLLUTANT AND CAS NUMBER (if available)	2. MARK 'X' a. TESTING REQUIRED	b. BELIEVED PRESENT	c. BELIEVED ABSENT	3. EFFLUENT a. MAXIMUM DAILY VALUE (1) CONCENTRATION	(2) MASS	b. MAXIMUM 30 DAY VALUE (if available) (1) CONCENTRATION	(2) MASS	c. LONG TERM AVRG. VALUE (if available) (1) CONCENTRATION	(2) MASS	d. NO. OF ANALYSES	4. UNITS a. CONCENTRATION	b. MASS	5. INTAKE (optional) a. LONG TERM AVERAGE VALUE (1) CONCENTRATION	(2) MASS	b. NO. OF ANALYSES
GC/MS FRACTION — BASE/NEUTRAL COMPOUNDS *(continued)*															
43B. N-Nitrosodiphenylamine (86-30-6)			x	ND	NA	NA	NA	NA	NA	1	ppm	kg/d	NA	NA	NA
44B. Phenanthrene (85-01-8)			x	ND	NA	NA	NA	NA	NA	1	ppm	kg/d	NA	NA	NA
45B. Pyrene (129-00-0)			x	ND	NA	NA	NA	NA	NA	1		kg/d	NA	NA	NA
46B. 1,2,4-Trichlorobenzene (120-82-1)			x	ND	NA	NA	NA	NA	NA	1	ppm	kg/d	NA	NA	NA
GC/MS FRACTION — PESTICIDES															
1P. Aldrin (309-00-2)			x	ND	NA	NA	NA	NA	NA	1	ppm	kg/d	NA	NA	NA
2P. α-BHC (319-84-6)			x	ND	NA	NA	NA	NA	NA	1	ppm	kg/d	NA	NA	NA
3P. β-BHC (319-85-7)			x	ND	NA	NA	NA	NA	NA	1	ppm	kg/d	NA	NA	NA
4P. γ-BHC (58-89-9)			x	ND	NA	NA	NA	NA	NA	1	ppm	kg/d	NA	NA	NA
5P. δ-BHC (319-86-8)			x	ND	NA	NA	NA	NA	NA	1	ppm	kg/d	NA	NA	NA
6P. Chlordane (57-74-9)			x	ND	NA	NA	NA	NA	NA	1	ppm	kg/d	NA	NA	NA
7P. 4,4'-DDT (50-29-3)			x	ND	NA	NA	NA	NA	NA	1	ppm	kg/d	NA	NA	NA
8P. 4,4'-DDE (72-55-9)			x	ND	NA	NA	NA	NA	NA	1	ppm	kg/d	NA	NA	NA
9P. 4,4'-DDD (72-54-8)			x	ND	NA	NA	NA	NA	NA	1	ppm	kg/d	NA	NA	NA
10P. Dieldrin (60-57-1)			x	ND	NA	NA	NA	NA	NA	1	ppm	kg/d	NA	NA	NA
11P. α-Endosulfan (115-29-7)			x	ND	NA	NA	NA	NA	NA	1	ppm	kg/d	NA	NA	NA
12P. β-Endosulfan (115-29-7)			x	ND	NA	NA	NA	NA	NA	1	ppm	kg/d	NA	NA	NA
13P. Endosulfan Sulfate (1031-07-8)			x	ND	NA	NA	NA	NA	NA	1	ppm	kg/d	NA	NA	NA
14P. Endrin (72-20-8)			x	ND	NA	NA	NA	NA	NA	1	ppm	kg/d	NA	NA	NA
15P. Endrin Aldehyde (7421-93-4)			x	ND	NA	NA	NA	NA	NA	1	ppm	kg/d	NA	NA	NA
16P. Heptachlor (76-44-8)			x	ND	NA	NA	NA	NA	NA	1	ppm	kg/d	NA	NA	NA

NORTH ANNA POWER STATION

EPA I.D. NUMBER (copy from Item 1 of Form 1)	OUTFALL NUMBER
VAD065376279	105

Bearing Cooling Water

CONTINUED FROM PAGE V-8

1. POLLUTANT AND CAS NUMBER (if available)	2. MARK 'X'			3. EFFLUENT							4. UNITS		5. INTAKE (optional)		
	a. TESTING REQUIRED	b. BELIEVED PRESENT	c. BELIEVED ABSENT	a. MAXIMUM DAILY VALUE		b. MAXIMUM 30 DAY VALUE (if available)		c. LONG TERM AVRG. VALUE (if available)		d. NO. OF ANALYSES	a. CONCENTRATION	b. MASS	a. LONG TERM AVERAGE VALUE		b. NO. OF ANALYSES
				(1) CONCENTRATION	(2) MASS	(1) CONCENTRATION	(2) MASS	(1) CONCENTRATION	(2) MASS				(1) CONCENTRATION	(2) MASS	
GC/MS FRACTION — PESTICIDES *(continued)*															
17P. Heptachlor Epoxide (1024-57-3)			x	ND	NA	NA	NA	NA	NA	1	ppm	kg/d	NA	NA	NA
18P. PCB-1242 (53469-21-9)			x	ND	NA	NA	NA	NA	NA	1	ppm	kg/d	NA	NA	NA
19P. PCB-1254 (11097-69-1)			x	ND	NA	NA	NA	NA	NA	1	ppm	kg/d	NA	NA	NA
20P. PCB-1221 (11104-28-2)			x	ND	NA	NA	NA	NA	NA	1	ppm	kg/d	NA	NA	NA
21P. PCB-1232 (11141-16-5)			x	ND	NA	NA	NA	NA	NA	1	ppm	kg/d	NA	NA	NA
22P. PCB-1248 (12672-29-6)			x	ND	NA	NA	NA	NA	NA	1	ppm	kg/d	NA	NA	NA
23P. PCB-1260 (11096-82-5)			x	ND	NA	NA	NA	NA	NA	1	ppm	kg/d	NA	NA	NA
24P. PCB-1016 (12674-11-2)			x	ND	NA	NA	NA	NA	NA	1	ppm	kg/d	NA	NA	NA
25P. Toxaphene (8001-35-2)			x	ND	NA	NA	NA	NA	NA	1	ppm	kg/d	NA	NA	NA

PLEASE PRINT OR TYPE IN THE UNSHADED AREAS ONLY. You may report some or all of this information on separate sheets *(use the same format)* instead of completing these pages. SEE INSTRUCTIONS.

NORTH ANNA POWER STATION

EPA I.D. NUMBER *(copy from Item 1 of Form 1)*

VAD065376279

Service Water Overboard

V. INTAKE AND EFFLUENT CHARACTERISTICS *(continued from page 3 of Form 2-C)*

SEE ADDENDUM FOR MORE INFO.

OUTFALL NO. 108 (114, 115)

PART A - You must provide the results of at least one analysis for every pollutant in this table. Complete one table for each outfall. See instructions for additional details.

1. POLLUTANT	2. EFFLUENT a. MAXIMUM DAILY VALUE (1) CONCENTRATION	a. MAXIMUM DAILY VALUE (2) MASS	b. MAXIMUM 30 DAY VALUE *(if available)* (1) CONCENTRATION	b. MAXIMUM 30 DAY VALUE (2) MASS	c. LONG TERM AVRG. VALUE *(if available)* (1) CONCENTRATION	c. LONG TERM AVRG. VALUE (2) MASS	d. NO. OF ANALYSES	3. UNITS *(specify if blank)* a. CONCENTRATION	3. UNITS b. MASS	4. INTAKE *(optional)* a. LONG TERM AVERAGE VALUE (1) CONCENTRATION	4. INTAKE a. LONG TERM AVERAGE VALUE (2) MASS	b. NO. OF ANALYSES
a. Biochemical Oxygen Demand *(BOD)*	3.43	0.32	NA	NA	NA	NA	1	ppm	kg/d	NA	NA	NA
b. Chemical Oxygen Demand *(COD)*	36.00	3.4	NA	NA	NA	NA	1	ppm	kg/d	NA	NA	NA
c. Total Organic Carbon *(TOC)*	18.1	1.7	NA	NA	NA	NA	1	ppm	kg/d	NA	NA	NA
d. Total Suspended Solids *(TSS)*	ND	NA	NA	NA	NA	NA	1	ppm	kg/d	NA	NA	NA
e. Ammonia *(as N)*	0.20	0.02	NA	NA	NA	NA	1	ppm	kg/d	NA	NA	NA
f. Flow	VALUE 0.150		VALUE 0.150		VALUE * 0.025		2	MGD	NA	VALUE NA		NA
g. Temperature *(winter)*	VALUE NA		VALUE NA		VALUE NA		NA	°C		VALUE NA		NA
h. Temperature *(summer)*	VALUE 24.6		VALUE NA		VALUE NA		1	°C		VALUE NA		NA
i. pH	MINIMUM 7.06	MAXIMUM 8.5	MINIMUM 7.06	MAXIMUM 8.5			5	STANDARD UNITS				

PART B - Mark "X" in column 2-a for each pollutant you know or have reason to believe is present. Mark "X" in column 2-b for each pollutant you believe to be absent. If you mark column 2a for any pollutant which is limited either directly, or indirectly but expressly, in an effluent limitations guideline, you must provide the results of at least one analysis for that pollutant. For other pollutants for which you mark column 2a, you must provide quantitative data or an explanation of their presence in your discharge. Complete one table for each outfall. See the instructions for additional details and requirements.

1. POLLUTANT AND CAS NO. *(if available)*	2. MARK 'X' a. BELIEVED PRESENT	2. MARK 'X' b. BELIEVED ABSENT	3. EFFLUENT a. MAXIMUM DAILY VALUE (1) CONCENTRATION	a. MAXIMUM DAILY VALUE (2) MASS	b. MAXIMUM 30 DAY VALUE *(if available)* (1) CONCENTRATION	b. MAXIMUM 30 DAY VALUE (2) MASS	c. LONG TERM AVRG. VALUE *(if available)* (1) CONCENTRATION	c. LONG TERM AVRG. VALUE (2) MASS	d. NO. OF ANALYSES	4. UNITS a. CONCENTRATION	4. UNITS b. MASS	5. INTAKE *(optional)* a. LONG TERM AVERAGE VALUE (1) CONCENTRATION	5. INTAKE a. LONG TERM AVERAGE VALUE (2) MASS	b. NO. OF ANALYSES
a. Bromide (24959-67-9)	x		61.10	5.8	NA	NA	NA	NA	1	ppm	kg/d	NA	NA	NA
b. Chlorine, Total Residual		x	ND	NA	NA	NA	NA	NA	1	ppm	kg/d	NA	NA	NA
c. Color	x		40	NA	NA	NA	NA	NA	1	color units	NA	NA	NA	NA
d. Fecal Coliform		x	NA	NA	NA	NA	NA	NA	NA	col/100ml	NA	NA	NA	NA
e. Fluoride (16984-48-8)	x		0.706	0.1	NA	NA	NA	NA	1	ppm	kg/d	NA	NA	NA
f. Nitrate—Nitrite *(as N)*	x		0.17	0.02	NA	NA	NA	NA	1	ppm	kg/d	NA	NA	NA

CONTINUE ON REVERSE

*** Long term average flow (1999) used to calculate all mass values.**

VAD065376279 NORTH ANNA POWER STATION OUTFALL 108 (114,115) Service Water Overboard

1. POLLUTANT AND CAS NO. (if available)	2. MARK 'X' a. BELIEVED PRESENT	2. MARK 'X' b. BELIEVED ABSENT	3. EFFLUENT a. MAXIMUM DAILY VALUE (1) CONCENTRATION	a. MAXIMUM DAILY VALUE (2) MASS	b. MAXIMUM 30 DAY VALUE (if available) (1) CONCENTRATION	b. MAXIMUM 30 DAY VALUE (2) MASS	c. LONG TERM AVRG. VALUE (if available) (1) CONCENTRATION	c. LONG TERM AVRG. VALUE (2) MASS	d. NO. OF ANALYSES	4. UNITS a. CONCENTRATION	4. UNITS b. MASS	5. INTAKE (optional) a. LONG TERM AVERAGE VALUE (1) CONCENTRATION	a. LONG TERM AVERAGE VALUE (2) MASS	b. NO. OF ANALYSES
g. Nitrogen, Total Organic (as N)	x		2.56	0.2	NA	NA	NA	NA	1	ppm	kg/d	NA	NA	NA
h. Oil and Grease		x	ND	NA	NA	NA	NA	NA	1	ppm	kg/d	NA	NA	NA
i. Phosphorus (as P), Total (7723-14-0)	x		0.30	0.03	NA	NA	NA	NA	1	ppm	kg/d	NA	NA	NA
j. Radioactivity														
(1) Alpha, Total	x		2.90	NA	NA	NA	NA	NA	1	pCi/L	NA	NA	NA	NA
(2) Beta, Total	x		25.00	NA	NA	NA	NA	NA	1	pCi/L	NA	NA	NA	NA
(3) Radium, Total		x	NA	NA	NA	NA	NA	NA	NA	NA	NA	NA	NA	NA
(4) Radium 226, Total		x	NA	NA	NA	NA	NA	NA	NA	NA	NA	NA	NA	NA
k. Sulfate (as SO_4) (14808-79-8)	x		67.35	6.4	NA	NA	NA	NA	1	ppm	kg/d	NA	NA	NA
l. Sulfide (as S)		x	ND	NA	NA	NA	NA	NA	1	ppm	kg/d	NA	NA	NA
m. Sulfite (as SO_3) (14265-45-3)		x	NA	NA	NA	NA	NA	NA	NA	ppm	kg/d	NA	NA	NA
n. Surfactants		x	ND	NA	NA	NA	NA	NA	1	ppm	kg/d	NA	NA	NA
o. Aluminum, Total (7429-90-5)	x		0.061	0.01	NA	NA	NA	NA	1	ppm	kg/d	NA	NA	NA
p. Barium, Total (7440-39-3)	x		0.094	0.01	NA	NA	NA	NA	1	ppm	kg/d	NA	NA	NA
q. Boron, Total (7440-42-8)	x		2.10	0.2	NA	NA	NA	NA	1	ppm	kg/d	NA	NA	NA
r. Cobalt, Total (7440-48-4)		x	ND	NA	NA	NA	NA	NA	1	ppm	kg/d	NA	NA	NA
s. Iron, Total (7439-89-6)	x		0.27	0.03	NA	NA	NA	NA	1	ppm	kg/d	NA	NA	NA
t. Magnesium, Total (7439-95-4)	x		19.12	1.8	NA	NA	NA	NA	1	ppm	kg/d	NA	NA	NA
u. Molybdenum, Total (7439-98-7)	x		106.9	10.1	NA	NA	NA	NA	1	ppm	kg/d	NA	NA	NA
v. Manganese, Total (7439-96-5)	x		0.192	0.02	NA	NA	NA	NA	1	ppm	kg/d	NA	NA	NA
w. Tin, Total (7440-31-5)		x	ND	NA	NA	NA	NA	NA	1	ppm	kg/d	NA	NA	NA
x. Titanium, Total (7440-32-6)		x	ND	NA	NA	NA	NA	NA	1	ppm	kg/d	NA	NA	NA

CONTINUE ON PAGE V-3

NORTH ANNA POWER STATION

EPA I.D. NUMBER (copy from Item 1 of Form 1)	OUTFALL NUMBER
VAD065376279	108 (114, 115)

Service Water Overboard

CONTINUED FROM PAGE 3 OF FORM 2-C

PART C - If you are a primary industry and this outfall contains process wastewater, refer to Table 2c-2 in the instructions to determine which of the GC/MS fractions you must test for. Mark "X" in column 2-a for all such GC/MS fractions that apply to your industry and for ALL toxic metals, cyanides, and total phenols. If you are not required to mark column 2-a *(secondary industries, nonprocess wastewater outfalls, and nonrequired GC/MS fractions)*, mark "X" in column 2-b for each pollutant you know or have reason to believe is present. Mark "X" in column 2-c for each pollutant you believe is absent. If you mark column 2a for any pollutant, you must provide the results of at least one analysis for that pollutant. If you mark column 2b for any pollutant, you must provide the results of at least one analysis for that pollutant if you know or have reason to believe it will be discharged in concentrations of 10 ppb or greater. If you mark column 2b for acrolein, acrylonitrile, 2,4 dinitrophenol, or 2-methyl-4, 6 dinitrophenol, you must provide the results of at least one analysis for each of these pollutants which you know or have reason to believe that you discharge in concentrations of 100 ppb or greater. Otherwise, for pollutants for which you mark column 2b, you must either submit at least one analysis or briefly describe the reasons the pollutant is expected to be discharged. Note that there are 7 pages to this part; please review each carefully. Complete one table *(all 7 pages)* for each outfall. See instructions for additional details and requirements.

1. POLLUTANT AND CAS NUMBER (if available)	2. MARK 'X'			3. EFFLUENT							4. UNITS		5. INTAKE (optional)		
	a. TESTING REQUIRED	b. BELIEVED PRESENT	c. BELIEVED ABSENT	a. MAXIMUM DAILY VALUE		b. MAXIMUM 30 DAY VALUE (if available)		c. LONG TERM AVRG. VALUE (if available)		d. NO. OF ANALYSES	a. CONCENTRATION	b. MASS	a. LONG TERM AVERAGE VALUE		b. NO. OF ANALYSES
				(1) CONCENTRATION	(2) MASS	(1) CONCENTRATION	(2) MASS	(1) CONCENTRATION	(2) MASS				(1) CONCENTRATION	(2) MASS	
METALS, CYANIDE, AND TOTAL PHENOLS															
1M. Antimony, Total (7440-36-0)			x	ND	NA	NA	NA	NA	NA	1	ppm	kg/d	NA	NA	NA
2M. Arsenic, Total (7440-38-2)			x	ND	NA	NA	NA	NA	NA	1	ppm	kg/d	NA	NA	NA
3M. Beryllium, Total, 7440-41-7)			x	ND	NA	NA	NA	NA	NA	1	ppm	kg/d	NA	NA	NA
4M. Cadmium, Total (7440-43-9)			x	ND	NA	NA	NA	NA	NA	1	ppm	kg/d	NA	NA	NA
5M. Chromium, Total (7440-47-3)			x	ND	NA	NA	NA	NA	NA	1	ppm	kg/d	NA	NA	NA
6M. Copper, Total (7440-50-8)		x		0.004	0.0004	NA	NA	NA	NA	1	ppm	kg/d	NA	NA	NA
7M. Lead, Total (7439-92-1)		x		0.001	0.0001	NA	NA	NA	NA	1	ppm	kg/d	NA	NA	NA
8M. Mercury, Total (7439-97-6)			x	ND	NA	NA	NA	NA	NA	1	ppm	kg/d	NA	NA	NA
9M. Nickel, Total (7440-02-0)			x	ND	NA	NA	NA	NA	NA	1	ppm	kg/d	NA	NA	NA
10M. Selenium, Total (7782-49-2)			x	ND	NA	NA	NA	NA	NA	1	ppm	kg/d	NA	NA	NA
11M. Silver, Total (7440-22-4)			x	ND	NA	NA	NA	NA	NA	1	ppm	kg/d	NA	NA	NA
12M. Thallium, Total (7440-28-0)			x	ND	NA	NA	NA	NA	NA	1	ppm	kg/d	NA	NA	NA
13M. Zinc, Total (7440-66-6)		x		0.015	0.0014	NA	NA	NA	NA	1	ppm	kg/d	NA	NA	NA
14M. Cyanide, Total (57-12-5)			x	ND	NA	NA	NA	NA	NA	1	ppm	kg/d	NA	NA	NA
15M. Phenols, Total		x		0.22	0.02	NA	NA	NA	NA	1	ppm	kg/d	NA	NA	NA
DIOXIN															
2,3,7,8 Tetrachlorodibenzo-P-Dioxin (1764-01-6)			x	DESCRIBE RESULTS NA											

CONTINUE ON REVERSE

STF ENV441F.7

CONTINUED FROM THE FRONT

VAD065376279 NORTH ANNA POWER STATION OUTFALL 108 (114,115) Service Water Overboard

1. POLLUTANT AND CAS NUMBER (if available)	2. MARK 'X' a. TESTING REQUIRED	b. BELIEVED PRESENT	c. BELIEVED ABSENT	3. EFFLUENT a. MAXIMUM DAILY VALUE (1) CONCENTRATION	(2) MASS	b. MAXIMUM 30 DAY VALUE (if available) (1) CONCENTRATION	(2) MASS	c. LONG TERM AVRG. VALUE (if available) (1) CONCENTRATION	(2) MASS	d. NO. OF ANALYSES	4. UNITS a. CONCENTRATION	b. MASS	5. INTAKE (optional) a. LONG TERM AVERAGE VALUE (1) CONCENTRATION	(2) MASS	b. NO. OF ANALYSES
GC/MS FRACTION — VOLATILE COMPOUNDS															
1V. Acrolein (107-02-8)			x	ND	NA	NA	NA	NA	NA	1	ppm	kg/d	NA	NA	NA
2V. Acrylonitrile (107-13-1)			x	ND	NA	NA	NA	NA	NA	1	ppm	kg/d	NA	NA	NA
3V. Benzene (71-43-2)			x	ND	NA	NA	NA	NA	NA	1	ppm	kg/d	NA	NA	NA
4V. Bis (*Chloromethyl*) Ether (542-88-1)			NA	not	required	not	required	not	required	NA	NA	NA	NA	NA	NA
5V. Bromoform (75-25-2)			x	ND	NA	NA	NA	NA	NA	1	ppm	kg/d	NA	NA	NA
6V. Carbon Tetrachloride (56-23-5)			x	ND	NA	NA	NA	NA	NA	1	ppm	kg/d	NA	NA	NA
7V. Chlorobenzene (108-90-7)			x	ND	NA	NA	NA	NA	NA	1	ppm	kg/d	NA	NA	NA
8V. Chlorodibromomethane (124-48-1)			x	ND	NA	NA	NA	NA	NA	1	ppm	kg/d	NA	NA	NA
9V. Chloroethane (75-00-3)			x	ND	NA	NA	NA	NA	NA	1	ppm	kg/d	NA	NA	NA
10V. 2-Chloroethylvinyl Ether (110-75-8)			x	ND	NA	NA	NA	NA	NA	1	ppm	kg/d	NA	NA	NA
11V. Chloroform (67-66-3)			x	ND	NA	NA	NA	NA	NA	1	ppm	kg/d	NA	NA	NA
12V. Dichlorobromomethane (75-27-4)			x	ND	NA	NA	NA	NA	NA	1	ppm	kg/d	NA	NA	NA
13V. Dichlorodifluoromethane (75-71-8)			NA	not	required	not	required	not	required	NA	NA	NA	NA	NA	NA
14V. 1,1-Dichloroethane (75-34-3)			x	ND	NA	NA	NA	NA	NA	1	ppm	kg/d	NA	NA	NA
15V. 1,2-Dichloroethane (107-06-2)			x	ND	NA	NA	NA	NA	NA	1	ppm	kg/d	NA	NA	NA
16V. 1,1-Dichloroethylene (75-35-4)			x	ND	NA	NA	NA	NA	NA	1	ppm	kg/d	NA	NA	NA
17V. 1,2-Dichloropropane (78-87-5)			x	ND	NA	NA	NA	NA	NA	1	ppm	kg/d	NA	NA	NA
18V. 1,3-Dichloropropylene (542-75-6)			x	ND	NA	NA	NA	NA	NA	1	ppm	kg/d	NA	NA	NA
19V. Ethylbenzene (100-41-4)			x	ND	NA	NA	NA	NA	NA	1	ppm	kg/d	NA	NA	NA
20V. Methyl Bromide (74-83-9)			x	ND	NA	NA	NA	NA	NA	1	ppm	kg/d	NA	NA	NA
21V. Methyl Chloride (74-87-3)			x	ND	NA	NA	NA	NA	NA	1	ppm	kg/d	NA	NA	NA

CONTINUE ON PAGE V-5

NORTH ANNA POWER STATION

EPA I.D. NUMBER (copy from Item 1 of Form 1)	OUTFALL NUMBER
VAD065376279	108 (114, 115)

CONTINUED FROM PAGE V-4

Service Water Overboard

1. POLLUTANT AND CAS NUMBER (if available)	2. MARK 'X'			3. EFFLUENT							4. UNITS		5. INTAKE (optional)		
	a. TESTING REQUIRED	b. BELIEVED PRESENT	c. BELIEVED ABSENT	a. MAXIMUM DAILY VALUE		b. MAXIMUM 30 DAY VALUE (if available)		c. LONG TERM AVRG. VALUE (if available)		d. NO. OF ANALYSES	a. CONCENTRATION	b. MASS	a. LONG TERM AVERAGE VALUE		b. NO. OF ANALYSES
				(1) CONCENTRATION	(2) MASS	(1) CONCENTRATION	(2) MASS	(1) CONCENTRATION	(2) MASS				(1) CONCENTRATION	(2) MASS	
GC/MS FRACTION — VOLATILE COMPOUNDS *(continued)*															
22V. Methylene Chloride (75-09-2)			x	ND	NA	NA	NA	NA	NA	1	ppm	kg/d	NA	NA	NA
23V. 1,1,2,2-Tetrachloroethane (79-34-5)			x	ND	NA	NA	NA	NA	NA	1	ppm	kg/d	NA	NA	NA
24V. Tetrachloroethylene (127-18-4)			x	ND	NA	NA	NA	NA	NA	1	ppm	kg/d	NA	NA	NA
25V. Toluene (108-88-3)			x	ND	NA	NA	NA	NA	NA	1	ppm	kg/d	NA	NA	NA
26V. 1,2-Trans-Dichloroethylene (156-60-5)			x	ND	NA	NA	NA	NA	NA	1	ppm	kg/d	NA	NA	NA
27V. 1,1,1-Trichloroethane (71-55-6)			x	ND	NA	NA	NA	NA	NA	1	ppm	kg/d	NA	NA	NA
28V. 1,1,2-Trichloroethane (79-00-5)			x	ND	NA	NA	NA	NA	NA	1	ppm	kg/d	NA	NA	NA
29V. Trichloroethylene (79-01-6)			x	ND	NA	NA	NA	NA	NA	1	ppm	kg/d	NA	NA	NA
30V. Trichlorofluoromethane (75-69-4)			NA	not	required	not	required	not	required	NA	NA	NA	NA	NA	NA
31V. Vinyl Chloride (75-01-4)			x	ND	NA	NA	NA	NA	NA	1	ppm	kg/d	NA	NA	NA
GC/MS FRACTION — ACID COMPOUNDS															
1A. 2-Chlorophenol (95-57-8)			x	ND	NA	NA	NA	NA	NA	1	ppm	kg/d	NA	NA	NA
2A. 2,4-Dichlorophenol (120-83-2)			x	ND	NA	NA	NA	NA	NA	1	ppm	kg/d	NA	NA	NA
3A. 2,4-Dimethylphenol (105-67-9)			x	ND	NA	NA	NA	NA	NA	1	ppm	kg/d	NA	NA	NA
4A. 4,6-Dinitro-O-Cresol (534-52-1)			x	ND	NA	NA	NA	NA	NA	1	ppm	kg/d	NA	NA	NA
5A. 2,4-Dinitrophenol (51-28-5)			x	ND	NA	NA	NA	NA	NA	1	ppm	kg/d	NA	NA	NA
6A. 2-Nitrophenol (88-75-5)			x	ND	NA	NA	NA	NA	NA	1	ppm	kg/d	NA	NA	NA
7A. 4-Nitrophenol (100-02-7)			x	ND	NA	NA	NA	NA	NA	1	ppm	kg/d	NA	NA	NA
8A. P-Chloro-M-Cresol (59-50-7)			x	ND	NA	NA	NA	NA	NA	1	ppm	kg/d	NA	NA	NA
9A. Pentachlorophenol (87-86-5)			x	ND	NA	NA	NA	NA	NA	1	ppm	kg/d	NA	NA	NA
10A. Phenol (108-95-2)			x	ND	NA	NA	NA	NA	NA	1	ppm	kg/d	NA	NA	NA
11A. 2,4,6-Trichlorophenol (88-06-2)			x	ND	NA	NA	NA	NA	NA	1	ppm	kg/d	NA	NA	NA

CONTINUE ON REVERSE

STF ENV441F.9

VAD065376279 NORTH ANNA POWER STATION OUTFALL 108 (114,115) Service Water Overboard

1. POLLUTANT AND CAS NUMBER (if available)	2. MARK 'X' a. TESTING REQUIRED	b. BELIEVED PRESENT	c. BELIEVED ABSENT	3. EFFLUENT a. MAXIMUM DAILY VALUE (1) CONCENTRATION	(2) MASS	b. MAXIMUM 30 DAY VALUE (if available) (1) CONCENTRATION	(2) MASS	c. LONG TERM AVRG. VALUE (if available) (1) CONCENTRATION	(2) MASS	d. NO. OF ANALYSES	4. UNITS a. CONCENTRATION	b. MASS	5. INTAKE (optional) a. LONG TERM AVERAGE VALUE (1) CONCENTRATION	(2) MASS	b. NO. OF ANALYSES
GC/MS FRACTION — BASE/NEUTRAL COMPOUNDS															
1B. Acenaphthene (83-32-9)			x	ND	NA	NA	NA	NA	NA	1	ppm	kg/d	NA	NA	NA
2B. Acenaphtylene (208-96-8)			x	ND	NA	NA	NA	NA	NA	1	ppm	kg/d	NA	NA	NA
3B. Anthracene (120-12-7)			x	ND	NA	NA	NA	NA	NA	1	ppm	kg/d	NA	NA	NA
4B. Benzidine (92-87-5)			x	ND	NA	NA	NA	NA	NA	1	ppm	kg/d	NA	NA	NA
5B. Benzo *(a)* Anthracene (56-55-3)			x	ND	NA	NA	NA	NA	NA	1	ppm	kg/d	NA	NA	NA
6B. Benzo *(a)* Pyrene (50-32-8)			x	ND	NA	NA	NA	NA	NA	1	ppm	kg/d	NA	NA	NA
7B. 3,4-Benzo-fluoranthene (205-99-2)			x	ND	NA	NA	NA	NA	NA	1	ppm	kg/d	NA	NA	NA
8B. Benzo *(ghi)* Perylene (191-24-2)			x	ND	NA	NA	NA	NA	NA	1	ppm	kg/d	NA	NA	NA
9B. Benzo *(k)* Fluoranthene (207-08-9)			x	ND	NA	NA	NA	NA	NA	1	ppm	kg/d	NA	NA	NA
10B. Bis *(2-Chloro-ethoxy)* Methane (111-91-1)			x	ND	NA	NA	NA	NA	NA	1	ppm	kg/d	NA	NA	NA
11B. Bis *(2-Chloro-ethyl)* Ether (111-44-4)			x	ND	NA	NA	NA	NA	NA	1	ppm	kg/d	NA	NA	NA
12B. Bis *(2-Chloroiso-propyl)* Ether (102-60-1)			x	ND	NA	NA	NA	NA	NA	1	ppm	kg/d	NA	NA	NA
13B. Bis *(2-Ethyl-hexyl)* Phthalate (117-81-7)			x	ND	NA	NA	NA	NA	NA	1	ppm	kg/d	NA	NA	NA
14B. 4-Bromo-phenyl Phenyl Ether (101-55-3)			x	ND	NA	NA	NA	NA	NA	1	ppm	kg/d	NA	NA	NA
15B. Butyl Benzyl Phthalate (85-68-7)			x	ND	NA	NA	NA	NA	NA	1	ppm	kg/d	NA	NA	NA
16B. 2-Chloro-naphthalene (91-58-7)			x	ND	NA	NA	NA	NA	NA	1	ppm	kg/d	NA	NA	NA
17B. 4-Chloro-phenyl Phenyl Ether (7005-72-3)			x	ND	NA	NA	NA	NA	NA	1	ppm	kg/d	NA	NA	NA
18B. Chrysene (218-01-9)			x	ND	NA	NA	NA	NA	NA	1	ppm	kg/d	NA	NA	NA
19B. Dibenzo *(a, h)* Anthracene (53-70-3)			x	ND	NA	NA	NA	NA	NA	1	ppm	kg/d	NA	NA	NA
20B. 1,2-Dichloro-benzene (95-50-1)			x	ND	NA	NA	NA	NA	NA	1	ppm	kg/d	NA	NA	NA
21B. 1,3-Dichloro-benzene (541-73-1)			x	ND	NA	NA	NA	NA	NA	1	ppm	kg/d	NA	NA	NA

CONTINUE ON PAGE V-7

NORTH ANNA POWER STATION

EPA I.D. NUMBER (copy from Item 1 of Form 1)	OUTFALL NUMBER
VAD065376279	108 (114, 115)

Service Water Overboard

CONTINUED FROM PAGE V-6

1. POLLUTANT AND CAS NUMBER (if available)	2. MARK 'X'			3. EFFLUENT							4. UNITS		5. INTAKE (optional)		
	a. TESTING REQUIRED	b. BELIEVED PRESENT	c. BELIEVED ABSENT	a. MAXIMUM DAILY VALUE		b. MAXIMUM 30 DAY VALUE (if available)		c. LONG TERM AVRG. VALUE (if available)		d. NO. OF ANALYSES	a. CONCENTRATION	b. MASS	a. LONG TERM AVERAGE VALUE		b. NO. OF ANALYSES
				(1) CONCENTRATION	(2) MASS	(1) CONCENTRATION	(2) MASS	(1) CONCENTRATION	(2) MASS				(1) CONCENTRATION	(2) MASS	
GC/MS FRACTION — BASE/NEUTRAL COMPOUNDS *(continued)*															
22B. 1,4-Dichlorobenzene (106-46-7)			x	ND	NA	NA	NA	NA	NA	1	ppm	kg/d	NA	NA	NA
23B. 3,3'-Dichlorobenzidine (91-94-1)			x	ND	NA	NA	NA	NA	NA	1	ppm	kg/d	NA	NA	NA
24B. Diethyl Phthalate (84-66-2)			x	ND	NA	NA	NA	NA	NA	1	ppm	kg/d	NA	NA	NA
25B. Dimethyl Phthalate (131-11-3)			x	ND	NA	NA	NA	NA	NA	1	ppm	kg/d	NA	NA	NA
26B. Di-N-Butyl Phthalate (84-74-2)			x	ND	NA	NA	NA	NA	NA	1	ppm	kg/d	NA	NA	NA
27B. 2,4-Dinitrotoluene (121-14-2)			x	ND	NA	NA	NA	NA	NA	1	ppm	kg/d	NA	NA	NA
28B. 2,6-Dinitrotoluene (606-20-2)			x	ND	NA	NA	NA	NA	NA	1	ppm	kg/d	NA	NA	NA
29B. Di-N-Octyl Phthalate (117-84-0)			x	ND	NA	NA	NA	NA	NA	1	ppm	kg/d	NA	NA	NA
30B. 1,2-Diphenylhydrazine *(as Azobenzene)* (122-66-7)			x	ND	NA	NA	NA	NA	NA	1	ppm	kg/d	NA	NA	NA
31B. Fluoranthene (206-44-0)			x	ND	NA	NA	NA	NA	NA	1	ppm	kg/d	NA	NA	NA
32B. Fluorene (86-73-7)			x	ND	NA	NA	NA	NA	NA	1	ppm	kg/d	NA	NA	NA
33B. Hexachlorobenzene (118-74-1)			x	ND	NA	NA	NA	NA	NA	1	ppm	kg/d	NA	NA	NA
34B. Hexachlorobutadiene (87-68-3)			x	ND	NA	NA	NA	NA	NA	1	ppm	kg/d	NA	NA	NA
35B. Hexachlorocyclopentadiene (77-47-4)			x	ND	NA	NA	NA	NA	NA	1	ppm	kg/d	NA	NA	NA
36B. Hexachloroethane (67-72-1)			x	ND	NA	NA	NA	NA	NA	1	ppm	kg/d	NA	NA	NA
37B. Indeno *(1,2,3-cd)* Pyrene (193-39-5)			x	ND	NA	NA	NA	NA	NA	1	ppm	kg/d	NA	NA	NA
38B. Isophorone (78-59-1)			x	ND	NA	NA	NA	NA	NA	1	ppm	kg/d	NA	NA	NA
39B. Naphthalene (91-20-3)			x	ND	NA	NA	NA	NA	NA	1	ppm	kg/d	NA	NA	NA
40B. Nitrobenzene (98-95-3)			x	ND	NA	NA	NA	NA	NA	1	ppm	kg/d	NA	NA	NA
41B. N-Nitrosodimethylamine (62-75-9)			x	ND	NA	NA	NA	NA	NA	1	ppm	kg/d	NA	NA	NA
42B. N-Nitrosodi-N-Propylamine (621-64-7)			x	ND	NA	NA	NA	NA	NA	1	ppm	kg/d	NA	NA	NA

CONTINUE ON REVERSE

STF ENV441F 11

CONTINUED FROM THE FRONT

VAD065376279 NORTH ANNA POWER STATION OUTFALL 108 (114,115) Service Water Overboard

1. POLLUTANT AND CAS NUMBER (if available)	2. MARK 'X' a. TESTING REQUIRED	b. BELIEVED PRESENT	c. BELIEVED ABSENT	3. EFFLUENT a. MAXIMUM DAILY VALUE (1) CONCENTRATION	(2) MASS	b. MAXIMUM 30 DAY VALUE (if available) (1) CONCENTRATION	(2) MASS	c. LONG TERM AVRG. VALUE (if available) (1) CONCENTRATION	(2) MASS	d. NO. OF ANALYSES	4. UNITS a. CONCENTRATION	b. MASS	5. INTAKE (optional) a. LONG TERM AVERAGE VALUE (1) CONCENTRATION	(2) MASS	b. NO. OF ANALYSES
GC/MS FRACTION — BASE/NEUTRAL COMPOUNDS *(continued)*															
43B. N-Nitrosodiphenylamine (86-30-6)			x	ND	NA	NA	NA	NA	NA	1	ppm	kg/d	NA	NA	NA
44B. Phenanthrene (85-01-8)			x	ND	NA	NA	NA	NA	NA	1	ppm	kg/d	NA	NA	NA
45B. Pyrene (129-00-0)			x	ND	NA	NA	NA	NA	NA	1		kg/d	NA	NA	NA
46B. 1,2,4-Trichlorobenzene (120-82-1)			x	ND	NA	NA	NA	NA	NA	1	ppm	kg/d	NA	NA	NA
GC/MS FRACTION — PESTICIDES															
1P. Aldrin (309-00-2)			x	ND	NA	NA	NA	NA	NA	1	ppm	kg/d	NA	NA	NA
2P. α-BHC (319-84-6)			x	ND	NA	NA	NA	NA	NA	1	ppm	kg/d	NA	NA	NA
3P. β-BHC (319-85-7)			x	ND	NA	NA	NA	NA	NA	1	ppm	kg/d	NA	NA	NA
4P. γ-BHC (58-89-9)			x	ND	NA	NA	NA	NA	NA	1	ppm	kg/d	NA	NA	NA
5P. δ-BHC (319-86-8)			x	ND	NA	NA	NA	NA	NA	1	ppm	kg/d	NA	NA	NA
6P. Chlordane (57-74-9)			x	ND	NA	NA	NA	NA	NA	1	ppm	kg/d	NA	NA	NA
7P. 4,4'-DDT (50-29-3)			x	ND	NA	NA	NA	NA	NA	1	ppm	kg/d	NA	NA	NA
8P. 4,4'-DDE (72-55-9)			x	ND	NA	NA	NA	NA	NA	1	ppm	kg/d	NA	NA	NA
9P. 4,4'-DDD (72-54-8)			x	ND	NA	NA	NA	NA	NA	1	ppm	kg/d	NA	NA	NA
10P. Dieldrin (60-57-1)			x	ND	NA	NA	NA	NA	NA	1	ppm	kg/d	NA	NA	NA
11P. α-Endosulfan (115-29-7)			x	ND	NA	NA	NA	NA	NA	1	ppm	kg/d	NA	NA	NA
12P. β-Endosulfan (115-29-7)			x	ND	NA	NA	NA	NA	NA	1	ppm	kg/d	NA	NA	NA
13P. Endosulfan Sulfate (1031-07-8)			x	ND	NA	NA	NA	NA	NA	1	ppm	kg/d	NA	NA	NA
14P. Endrin (72-20-8)			x	ND	NA	NA	NA	NA	NA	1	ppm	kg/d	NA	NA	NA
15P. Endrin Aldehyde (7421-93-4)			x	ND	NA	NA	NA	NA	NA	1	ppm	kg/d	NA	NA	NA
16P. Heptachlor (76-44-8)			x	ND	NA	NA	NA	NA	NA	1	ppm	kg/d	NA	NA	NA

CONTINUE ON PAGE V-9

NORTH ANNA POWER STATIONN

EPA I.D. NUMBER (copy from Item 1 of Form 1)	OUTFALL NUMBER
VAD065376279	108 (114, 115)

Service Water Overboard

CONTINUED FROM PAGE V-8

1. POLLUTANT AND CAS NUMBER (if available)	2. MARK 'X'			3. EFFLUENT							4. UNITS		5. INTAKE (optional)		
	a. TESTING REQUIRED	b. BELIEVED PRESENT	c. BELIEVED ABSENT	a. MAXIMUM DAILY VALUE		b. MAXIMUM 30 DAY VALUE (if available)		c. LONG TERM AVRG. VALUE (if available)		d. NO. OF ANALYSES	a. CONCENTRATION	b. MASS	a. LONG TERM AVERAGE VALUE		b. NO. OF ANALYSES
				(1) CONCENTRATION	(2) MASS	(1) CONCENTRATION	(2) MASS	(1) CONCENTRATION	(2) MASS				(1) CONCENTRATION	(2) MASS	
GC/MS FRACTION — PESTICIDES *(continued)*															
17P. Heptachlor Epoxide (1024-57-3)			x	ND	NA	NA	NA	NA	NA	1	ppm	kg/d	NA	NA	NA
18P. PCB-1242 (53469-21-9)			x	ND	NA	NA	NA	NA	NA	1	ppm	kg/d	NA	NA	NA
19P. PCB-1254 (11097-69-1)			x	ND	NA	NA	NA	NA	NA	1	ppm	kg/d	NA	NA	NA
20P. PCB-1221 (11104-28-2)			x	ND	NA	NA	NA	NA	NA	1	ppm	kg/d	NA	NA	NA
21P. PCB-1232 (11141-16-5)			x	ND	NA	NA	NA	NA	NA	1	ppm	kg/d	NA	NA	NA
22P. PCB-1248 (12672-29-6)			x	ND	NA	NA	NA	NA	NA	1	ppm	kg/d	NA	NA	NA
23P. PCB-1260 (11096-82-5)			x	ND	NA	NA	NA	NA	NA	1	ppm	kg/d	NA	NA	NA
24P. PCB-1016 (12674-11-2)			x	ND	NA	NA	NA	NA	NA	1	ppm	kg/d	NA	NA	NA
25P. Toxaphene (8001-35-2)			x	ND	NA	NA	NA	NA	NA	1	ppm	kg/d	NA	NA	NA

PLEASE PRINT OR TYPE IN THE UNSHADED AREAS ONLY. You may report some or all of this information on separate sheets *(use the same format)* instead of completing these pages. SEE INSTRUCTIONS.

NORTH ANNA POWER STATION

EPA I.D. NUMBER *(copy from Item 1 of Form 1)*

VAD065376279

Hot Well Drain Unit 2

V. INTAKE AND EFFLUENT CHARACTERISTICS *(continued from page 3 of Form 2-C)*

SEE ADDENDUM FOR MORE INFO.

OUTFALL NO. 110 (109)

PART A - You must provide the results of at least one analysis for every pollutant in this table. Complete one table for each outfall. See instructions for additional details.

1. POLLUTANT	2. EFFLUENT a. MAXIMUM DAILY VALUE (1) CONCENTRATION	a. MAXIMUM DAILY VALUE (2) MASS	b. MAXIMUM 30 DAY VALUE (if available) (1) CONCENTRATION	b. MAXIMUM 30 DAY VALUE (2) MASS	c. LONG TERM AVRG. VALUE (if available) (1) CONCENTRATION	c. LONG TERM AVRG. VALUE (2) MASS	d. NO. OF ANALYSES	3. UNITS (specify if blank) a. CONCENTRATION	3. UNITS b. MASS	4. INTAKE (optional) a. LONG TERM AVERAGE VALUE (1) CONCENTRATION	4. INTAKE a. LONG TERM AVERAGE VALUE (2) MASS	4. INTAKE b. NO. OF ANALYSES
a. Biochemical Oxygen Demand *(BOD)*	ND	NA	NA	NA	NA	NA	1	ppm	kg/d	NA	NA	NA
b. Chemical Oxygen Demand *(COD)*	ND	NA	NA	NA	NA	NA	1	ppm	kg/d	NA	NA	NA
c. Total Organic Carbon *(TOC)*	1.3	0.2	NA	NA	NA	NA	1	ppm	kg/d	NA	NA	NA
d. Total Suspended Solids *(TSS)*	ND	NA	ND	NA	ND	NA	3	ppm	kg/d	NA	NA	NA
e. Ammonia *(as N)*	2.41	0.29	NA	NA	NA	NA	1	ppm	kg/d	NA	NA	NA
f. Flow	VALUE 0.281		VALUE 0.281		VALUE * 0.032		3	MGD	NA	VALUE NA		NA
g. Temperature *(winter)*	VALUE NA		VALUE NA		VALUE NA		NA	°C		VALUE NA		NA
h. Temperature *(summer)*	VALUE 54 *		VALUE NA		VALUE NA		1	°C		VALUE NA		NA
i. pH	MINIMUM 6.89	MAXIMUM 7.14	MINIMUM NA	MAXIMUM NA			4	STANDARD UNITS				

PART B - Mark "X" in column 2-a for each pollutant you know or have reason to believe is present. Mark "X" in column 2-b for each pollutant you believe to be absent. If you mark column 2a for any pollutant which is limited either directly, or indirectly but expressly, in an effluent limitations guideline, you must provide the results of at least one analysis for that pollutant. For other pollutants for which you mark column 2a, you must provide quantitative data or an explanation of their presence in your discharge. Complete one table for each outfall. See the instructions for additional details and requirements.

1. POLLUTANT AND CAS NO. *(if available)*	2. MARK 'X' a. BELIEVED PRESENT	2. MARK 'X' b. BELIEVED ABSENT	3. EFFLUENT a. MAXIMUM DAILY VALUE (1) CONCENTRATION	a. MAXIMUM DAILY VALUE (2) MASS	b. MAXIMUM 30 DAY VALUE (if available) (1) CONCENTRATION	b. MAXIMUM 30 DAY VALUE (2) MASS	c. LONG TERM AVRG. VALUE (if available) (1) CONCENTRATION	c. LONG TERM AVRG. VALUE (2) MASS	d. NO. OF ANALYSES	4. UNITS a. CONCENTRATION	4. UNITS b. MASS	5. INTAKE (optional) a. LONG TERM AVERAGE VALUE (1) CONCENTRATION	5. INTAKE a. LONG TERM AVERAGE VALUE (2) MASS	5. INTAKE b. NO. OF ANALYSES
a. Bromide (24959-67-9)		x	NA	NA	NA	NA	NA	NA	NA	ppm	kg/d	NA	NA	NA
b. Chlorine, Total Residual	x		0.06	0.01	NA	NA	NA	NA	1	ppm	kg/d	NA	NA	NA
c. Color		x	0	NA	NA	NA	NA	NA	1	color units	NA	NA	NA	NA
d. Fecal Coliform		x	NA	NA	NA	NA	NA	NA	NA	col/100ml	NA	NA	NA	NA
e. Fluoride (16984-48-8)		x	NA	NA	NA	NA	NA	NA	NA	ppm	kg/d	NA	NA	NA
f. Nitrate—Nitrite *(as N)*		x	ND	NA	NA	NA	NA	NA	NA	ppm	kg/d	NA	NA	NA

*** Long term average flow (1999) used to calculate all mass values.**

CONTINUE ON REVERSE

STF ENV441F.5

ITEM V-B CONTINUED FROM FRONT

VAD065376279 NORTH ANNA **OUTFALL 110 (109)** **Hot Well Drain Unit 2**

1. POLLUTANT AND CAS NO. (if available)	2. MARK 'X' a. BELIEVED PRESENT	2. MARK 'X' b. BELIEVED ABSENT	3. EFFLUENT a. MAXIMUM DAILY VALUE (1) CONCENTRATION	a. MAXIMUM DAILY VALUE (2) MASS	b. MAXIMUM 30 DAY VALUE (if available) (1) CONCENTRATION	b. MAXIMUM 30 DAY VALUE (if available) (2) MASS	c. LONG TERM AVRG. VALUE (if available) (1) CONCENTRATION	c. LONG TERM AVRG. VALUE (if available) (2) MASS	d. NO. OF ANALYSES	4. UNITS a. CONCENTRATION	4. UNITS b. MASS	5. INTAKE (optional) a. LONG TERM AVERAGE VALUE (1) CONCENTRATION	5. INTAKE (optional) a. LONG TERM AVERAGE VALUE (2) MASS	5. INTAKE (optional) b. NO. OF ANALYSES
g. Nitrogen, Total Organic (as N)		x	1.81	0.22	NA	NA	NA	NA	1	ppm	kg/d	NA	NA	NA
h. Oil and Grease		x	ND	NA	ND	NA	ND	NA	3	ppm	kg/d	NA	NA	NA
i. Phosphorus (as P), Total (7723-14-0)		x	0.01	0.001	NA	NA	NA	NA	1	ppm	kg/d	NA	NA	NA
j. Radioactivity														
(1) Alpha, Total		x	<0.30	NA	NA	NA	NA	NA	1	pCi/L	NA	NA	NA	NA
(2) Beta, Total		x	<0.40	NA	NA	NA	NA	NA	1	pCi/L	NA	NA	NA	NA
(3) Radium, Total		x	NA	NA	NA	NA	NA	NA	NA	NA	NA	NA	NA	NA
(4) Radium 226, Total		x	NA	NA	NA	NA	NA	NA	NA	NA	NA	NA	NA	NA
k. Sulfate (as SO_4) (14808-79-8)		x	NA	NA	NA	NA	NA	NA	NA	ppm	kg/d	NA	NA	NA
l. Sulfide (as S)		x	ND	NA	NA	NA	NA	NA	NA	ppm	kg/d	NA	NA	NA
m. Sulfite (as SO_3) (14265-45-3)		x	NA	NA	NA	NA	NA	NA	NA	ppm	kg/d	NA	NA	NA
n. Surfactants		x	NA	NA	NA	NA	NA	NA	1	ppm	kg/d	NA	NA	NA
o. Aluminum, Total (7429-90-5)		x	0.028	0.003	NA	NA	NA	NA	1	ppm	kg/d	NA	NA	NA
p. Barium, Total (7440-39-3)		x	ND	NA	NA	NA	NA	NA	1	ppm	kg/d	NA	NA	NA
q. Boron, Total (7440-42-8)		x	ND	NA	NA	NA	NA	NA	1	ppm	kg/d	NA	NA	NA
r. Cobalt, Total (7440-48-4)		x	ND	NA	NA	NA	NA	NA	1	ppm	kg/d	NA	NA	NA
s. Iron, Total (7439-89-6)		x	0.12	0.01	NA	NA	NA	NA	1	ppm	kg/d	NA	NA	NA
t. Magnesium, Total (7439-95-4)		x	0.04	0.005	NA	NA	NA	NA	1	ppm	kg/d	NA	NA	NA
u. Molybdenum, Total (7439-98-7)		x	0.001	0.0001	NA	NA	NA	NA	1	ppm	kg/d	NA	NA	NA
v. Manganese, Total (7439-96-5)		x	0.009	0.001	NA	NA	NA	NA	1	ppm	kg/d	NA	NA	NA
w. Tin, Total (7440-31-5)		x	ND	NA	NA	NA	NA	NA	1	ppm	kg/d	NA	NA	NA
x. Titanium, Total (7440-32-6)		x	ND	NA	NA	NA	NA	NA	1	ppm	kg/d	NA	NA	NA

CONTINUE ON PAGE V-3

NORTH ANNA POWER STATION

EPA I.D. NUMBER (copy from Item 1 of Form 1)	OUTFALL NUMBER
VAD065376279	110 (109)

Hot Well Drain Unit 2

CONTINUED FROM PAGE 3 OF FORM 2-C

PART C - If you are a primary industry and this outfall contains process wastewater, refer to Table 2c-2 in the instructions to determine which of the GC/MS fractions you must test for. Mark "X" in column 2-a for all such GC/MS fractions that apply to your industry and for ALL toxic metals, cyanides, and total phenols. If you are not required to mark column 2-a *(secondary industries, nonprocess wastewater outfalls, and nonrequired GC/MS fractions)*, mark "X" in column 2-b for each pollutant you know or have reason to believe is present. Mark "X" in column 2-c for each pollutant you believe is absent. If you mark column 2a for any pollutant, you must provide the results of at least one analysis for that pollutant. If you mark column 2b for any pollutant, you must provide the results of at least one analysis for that pollutant if you know or have reason to believe it will be discharged in concentrations of 10 ppb or greater. If you mark column 2b for acrolein, acrylonitrile, 2,4 dinitrophenol, or 2-methyl-4, 6 dinitrophenol, you must provide the results of at least one analysis for each of these pollutants which you know or have reason to believe that you discharge in concentrations of 100 ppb or greater. Otherwise, for pollutants for which you mark column 2b, you must either submit at least one analysis or briefly describe the reasons the pollutant is expected to be discharged. Note that there are 7 pages to this part; please review each carefully. Complete one table *(all 7 pages)* for each outfall. See instructions for additional details and requirements.

1. POLLUTANT AND CAS NUMBER (if available)	2. MARK 'X'			3. EFFLUENT							4. UNITS		5. INTAKE (optional)		
	a. TESTING REQUIRED	b. BELIEVED PRESENT	c. BELIEVED ABSENT	a. MAXIMUM DAILY VALUE		b. MAXIMUM 30 DAY VALUE (if available)		c. LONG TERM AVRG. VALUE (if available)		d. NO. OF ANALYSES	a. CONCENTRATION	b. MASS	a. LONG TERM AVERAGE VALUE		b. NO. OF ANALYSES
				(1) CONCENTRATION	(2) MASS	(1) CONCENTRATION	(2) MASS	(1) CONCENTRATION	(2) MASS				(1) CONCENTRATION	(2) MASS	
METALS, CYANIDE, AND TOTAL PHENOLS															
1M. Antimony, Total (7440-36-0)			x	ND	NA	NA	NA	NA	NA	1	ppm	kg/d	NA	NA	NA
2M. Arsenic, Total (7440-38-2)			x	ND	NA	NA	NA	NA	NA	1	ppm	kg/d	NA	NA	NA
3M. Beryllium, Total, 7440-41-7)			x	0.0008	0.0001	NA	NA	NA	NA	1	ppm	kg/d	NA	NA	NA
4M. Cadmium, Total (7440-43-9)			x	0.0003	0.00004	NA	NA	NA	NA	1	ppm	kg/d	NA	NA	NA
5M. Chromium, Total (7440-47-3)			x	0.003	0.0004	NA	NA	NA	NA	1	ppm	kg/d	NA	NA	NA
6M. Copper, Total (7440-50-8)			x	0.003	0.0004	NA	NA	NA	NA	1	ppm	kg/d	NA	NA	NA
7M. Lead, Total (7439-92-1)			x	0.002	0.0002	NA	NA	NA	NA	1	ppm	kg/d	NA	NA	NA
8M. Mercury, Total (7439-97-6)			x	ND	NA	NA	NA	NA	NA	1	ppm	kg/d	NA	NA	NA
9M. Nickel, Total (7440-02-0)			x	ND	NA	NA	NA	NA	NA	1	ppm	kg/d	NA	NA	NA
10M. Selenium, Total (7782-49-2)			x	ND	NA	NA	NA	NA	NA	1	ppm	kg/d	NA	NA	NA
11M. Silver, Total (7440-22-4)			x	ND	NA	NA	NA	NA	NA	1	ppm	kg/d	NA	NA	NA
12M. Thallium, Total (7440-28-0)			x	ND	NA	NA	NA	NA	NA	1	ppm	kg/d	NA	NA	NA
13M. Zinc, Total (7440-66-6)			x	ND	NA	NA	NA	NA	NA	1	ppm	kg/d	NA	NA	NA
14M. Cyanide, Total (57-12-5)			x	ND	NA	NA	NA	NA	NA	1	ppm	kg/d	NA	NA	NA
15M. Phenols, Total			x	ND	NA	NA	NA	NA	NA	1	ppm	kg/d	NA	NA	NA
DIOXIN															
2,3,7,8 Tetrachlorodibenzo-P-Dioxin (1764-01-6)			x	DESCRIBE RESULTS NA											

CONTINUE ON REVERSE

STF ENV441F.7

VAD065376279 NORTH ANNA

OUTFALL 110 (109) Hot Well Drain Unit 2

1. POLLUTANT AND CAS NUMBER (if available)	2. MARK 'X'			3. EFFLUENT							4. UNITS		5. INTAKE (optional)		
	a. TESTING REQUIRED	b. BELIEVED PRESENT	c. BELIEVED ABSENT	a. MAXIMUM DAILY VALUE		b. MAXIMUM 30 DAY VALUE (if available)		c. LONG TERM AVRG. VALUE (if available)		d. NO. OF ANALYSES	a. CONCENTRATION	b. MASS	a. LONG TERM AVERAGE VALUE		b. NO. OF ANALYSES
				(1) CONCENTRATION	(2) MASS	(1) CONCENTRATION	(2) MASS	(1) CONCENTRATION	(2) MASS				(1) CONCENTRATION	(2) MASS	
GC/MS FRACTION — VOLATILE COMPOUNDS															
1V. Acrolein (107-02-8)			x	ND	NA	NA	NA	NA	NA	1	ppm	kg/d	NA	NA	NA
2V. Acrylonitrile (107-13-1)			x	ND	NA	NA	NA	NA	NA	1	ppm	kg/d	NA	NA	NA
3V. Benzene (71-43-2)			x	ND	NA	NA	NA	NA	NA	1	ppm	kg/d	NA	NA	NA
4V. Bis (Chloromethyl) Ether (542-88-1)			NA	not	required	not	required	not	required	NA	NA	NA	NA	NA	NA
5V. Bromoform (75-25-2)			x	ND	NA	NA	NA	NA	NA	1	ppm	kg/d	NA	NA	NA
6V. Carbon Tetrachloride (56-23-5)			x	ND	NA	NA	NA	NA	NA	1	ppm	kg/d	NA	NA	NA
7V. Chlorobenzene (108-90-7)			x	ND	NA	NA	NA	NA	NA	1	ppm	kg/d	NA	NA	NA
8V. Chlorodibromomethane (124-48-1)			x	ND	NA	NA	NA	NA	NA	1	ppm	kg/d	NA	NA	NA
9V. Chloroethane (75-00-3)			x	ND	NA	NA	NA	NA	NA	1	ppm	kg/d	NA	NA	NA
10V. 2-Chloroethylvinyl Ether (110-75-8)			x	ND	NA	NA	NA	NA	NA	1	ppm	kg/d	NA	NA	NA
11V. Chloroform (67-66-3)			x	ND	NA	NA	NA	NA	NA	1	ppm	kg/d	NA	NA	NA
12V. Dichlorobromomethane (75-27-4)			x	ND	NA	NA	NA	NA	NA	1	ppm	kg/d	NA	NA	NA
13V. Dichlorodifluoromethane (75-71-8)			NA	not	required	not	required	not	required	NA	NA	NA	NA	NA	NA
14V. 1,1-Dichloroethane (75-34-3)			x	ND	NA	NA	NA	NA	NA	1	ppm	kg/d	NA	NA	NA
15V. 1,2-Dichloroethane (107-06-2)			x	ND	NA	NA	NA	NA	NA	1	ppm	kg/d	NA	NA	NA
16V. 1,1-Dichloroethylene (75-35-4)			x	ND	NA	NA	NA	NA	NA	1	ppm	kg/d	NA	NA	NA
17V. 1,2-Dichloropropane (78-87-5)			x	ND	NA	NA	NA	NA	NA	1	ppm	kg/d	NA	NA	NA
18V. 1,3-Dichloropropylene (542-75-6)			x	ND	NA	NA	NA	NA	NA	1	ppm	kg/d	NA	NA	NA
19V. Ethylbenzene (100-41-4)			x	ND	NA	NA	NA	NA	NA	1	ppm	kg/d	NA	NA	NA
20V. Methyl Bromide (74-83-9)			x	ND	NA	NA	NA	NA	NA	1	ppm	kg/d	NA	NA	NA
21V. Methyl Chloride (74-87-3)			x	ND	NA	NA	NA	NA	NA	1	ppm	kg/d	NA	NA	NA

CONTINUE ON PAGE V-5

NORTH ANNA POWER STATION

EPA I.D. NUMBER (copy from Item 1 of Form 1)	OUTFALL NUMBER
VAD065376279	110 (109)

Hot Well Drain Unit 2

CONTINUED FROM PAGE V-4

1. POLLUTANT AND CAS NUMBER (if available)	2. MARK 'X'			3. EFFLUENT							4. UNITS		5. INTAKE (optional)		
	a. TESTING REQUIRED	b. BELIEVED PRESENT	c. BELIEVED ABSENT	a. MAXIMUM DAILY VALUE		b. MAXIMUM 30 DAY VALUE (if available)		c. LONG TERM AVRG. VALUE (if available)		d. NO. OF ANALYSES	a. CONCENTRATION	b. MASS	a. LONG TERM AVERAGE VALUE		b. NO. OF ANALYSES
				(1) CONCENTRATION	(2) MASS	(1) CONCENTRATION	(2) MASS	(1) CONCENTRATION	(2) MASS				(1) CONCENTRATION	(2) MASS	
GC/MS FRACTION — VOLATILE COMPOUNDS *(continued)*															
22V. Methylene Chloride (75-09-2)			x	ND	NA	NA	NA	NA	NA	1	ppm	kg/d	NA	NA	NA
23V. 1,1,2,2-Tetrachloroethane (79-34-5)			x	ND	NA	NA	NA	NA	NA	1	ppm	kg/d	NA	NA	NA
24V. Tetrachloroethylene (127-18-4)			x	ND	NA	NA	NA	NA	NA	1	ppm	kg/d	NA	NA	NA
25V. Toluene (108-88-3)			x	ND	NA	NA	NA	NA	NA	1	ppm	kg/d	NA	NA	NA
26V. 1,2-Trans-Dichloroethylene (156-60-5)			x	ND	NA	NA	NA	NA	NA	1	ppm	kg/d	NA	NA	NA
27V. 1,1,1-Trichloroethane (71-55-6)			x	ND	NA	NA	NA	NA	NA	1	ppm	kg/d	NA	NA	NA
28V. 1,1,2-Trichloroethane (79-00-5)			x	ND	NA	NA	NA	NA	NA	1	ppm	kg/d	NA	NA	NA
29V. Trichloroethylene (79-01-6)			x	ND	NA	NA	NA	NA	NA	1	ppm	kg/d	NA	NA	NA
30V. Trichlorofluoromethane (75-69-4)			NA	not	required	not	required	not	required	NA	NA	NA	NA	NA	NA
31V. Vinyl Chloride (75-01-4)			x	ND	NA	NA	NA	NA	NA	1	ppm	kg/d	NA	NA	NA
GC/MS FRACTION — ACID COMPOUNDS															
1A. 2-Chlorophenol (95-57-8)			x	ND	NA	NA	NA	NA	NA	1	ppm	kg/d	NA	NA	NA
2A. 2,4-Dichlorophenol (120-83-2)			x	ND	NA	NA	NA	NA	NA	1	ppm	kg/d	NA	NA	NA
3A. 2,4-Dimethylphenol (105-67-9)			x	ND	NA	NA	NA	NA	NA	1	ppm	kg/d	NA	NA	NA
4A. 4,6-Dinitro-O-Cresol (534-52-1)			x	ND	NA	NA	NA	NA	NA	1	ppm	kg/d	NA	NA	NA
5A. 2,4-Dinitrophenol (51-28-5)			x	ND	NA	NA	NA	NA	NA	1	ppm	kg/d	NA	NA	NA
6A. 2-Nitrophenol (88-75-5)			x	ND	NA	NA	NA	NA	NA	1	ppm	kg/d	NA	NA	NA
7A. 4-Nitrophenol (100-02-7)			x	ND	NA	NA	NA	NA	NA	1	ppm	kg/d	NA	NA	NA
8A. P-Chloro-M-Cresol (59-50-7)			x	ND	NA	NA	NA	NA	NA	1	ppm	kg/d	NA	NA	NA
9A. Pentachlorophenol (87-86-5)			x	ND	NA	NA	NA	NA	NA	1	ppm	kg/d	NA	NA	NA
10A. Phenol (108-95-2)			x	ND	NA	NA	NA	NA	NA	1	ppm	kg/d	NA	NA	NA
11A. 2,4,6-Trichlorophenol (88-06-2)			x	ND	NA	NA	NA	NA	NA	1	ppm	kg/d	NA	NA	NA

CONTINUE ON REVERSE

STF ENV441F.9

VAD065376279 NORTH ANNA

OUTFALL 110 (109) Hot Well Drain Unit 2

1. POLLUTANT AND CAS NUMBER (if available)	2. MARK 'X'			3. EFFLUENT							4. UNITS		5. INTAKE (optional)		
	a. TESTING REQUIRED	b. BELIEVED PRESENT	c. BELIEVED ABSENT	a. MAXIMUM DAILY VALUE		b. MAXIMUM 30 DAY VALUE (if available)		c. LONG TERM AVRG. VALUE (if available)		d. NO. OF ANALYSES	a. CONCENTRATION	b. MASS	a. LONG TERM AVERAGE VALUE		b. NO. OF ANALYSES
				(1) CONCENTRATION	(2) MASS	(1) CONCENTRATION	(2) MASS	(1) CONCENTRATION	(2) MASS				(1) CONCENTRATION	(2) MASS	
GC/MS FRACTION — BASE/NEUTRAL COMPOUNDS															
1B. Acenaphthene (83-32-9)			x	ND	NA	NA	NA	NA	NA	1	ppm	kg/d	NA	NA	NA
2B. Acenaphtylene (208-96-8)			x	ND	NA	NA	NA	NA	NA	1	ppm	kg/d	NA	NA	NA
3B. Anthracene (120-12-7)			x	ND	NA	NA	NA	NA	NA	1	ppm	kg/d	NA	NA	NA
4B. Benzidine (92-87-5)			x	ND	NA	NA	NA	NA	NA	1	ppm	kg/d	NA	NA	NA
5B. Benzo *(a)* Anthracene (56-55-3)			x	ND	NA	NA	NA	NA	NA	1	ppm	kg/d	NA	NA	NA
6B. Benzo *(a)* Pyrene (50-32-8)			x	ND	NA	NA	NA	NA	NA	1	ppm	kg/d	NA	NA	NA
7B. 3,4-Benzo-fluoranthene (205-99-2)			x	ND	NA	NA	NA	NA	NA	1	ppm	kg/d	NA	NA	NA
8B. Benzo *(ghi)* Perylene (191-24-2)			x	ND	NA	NA	NA	NA	NA	1	ppm	kg/d	NA	NA	NA
9B. Benzo *(k)* Fluoranthene (207-08-9)			x	ND	NA	NA	NA	NA	NA	1	ppm	kg/d	NA	NA	NA
10B. Bis *(2-Chloro-ethoxy)* Methane (111-91-1)			x	ND	NA	NA	NA	NA	NA	1	ppm	kg/d	NA	NA	NA
11B. Bis *(2-Chloro-ethyl)* Ether (111-44-4)			x	ND	NA	NA	NA	NA	NA	1	ppm	kg/d	NA	NA	NA
12B. Bis *(2-Chloroiso-propyl)* Ether (102-60-1)			x	ND	NA	NA	NA	NA	NA	1	ppm	kg/d	NA	NA	NA
13B. Bis *(2-Ethyl-hexyl)* Phthalate (117-81-7)			x	ND	NA	NA	NA	NA	NA	1	ppm	kg/d	NA	NA	NA
14B. 4-Bromo-phenyl Phenyl Ether (101-55-3)			x	ND	NA	NA	NA	NA	NA	1	ppm	kg/d	NA	NA	NA
15B. Butyl Benzyl Phthalate (85-68-7)			x	ND	NA	NA	NA	NA	NA	1	ppm	kg/d	NA	NA	NA
16B. 2-Chloro-naphthalene (91-58-7)			x	ND	NA	NA	NA	NA	NA	1	ppm	kg/d	NA	NA	NA
17B. 4-Chloro-phenyl Phenyl Ether (7005-72-3)			x	ND	NA	NA	NA	NA	NA	1	ppm	kg/d	NA	NA	NA
18B. Chrysene (218-01-9)			x	ND	NA	NA	NA	NA	NA	1	ppm	kg/d	NA	NA	NA
19B. Dibenzo *(a, h)* Anthracene (53-70-3)			x	ND	NA	NA	NA	NA	NA	1	ppm	kg/d	NA	NA	NA
20B. 1,2-Dichloro-benzene (95-50-1)			x	ND	NA	NA	NA	NA	NA	1	ppm	kg/d	NA	NA	NA
21B. 1,3-Dichloro-benzene (541-73-1)			x	ND	NA	NA	NA	NA	NA	1	ppm	kg/d	NA	NA	NA

CONTINUE ON PAGE V-7

NORTH ANNA

EPA I.D. NUMBER (copy from Item 1 of Form 1)	OUTFALL NUMBER
VAD065376279	110 (109)

Hot Well Drain Unit 2

CONTINUED FROM PAGE V-6

1. POLLUTANT AND CAS NUMBER (if available)	2. MARK 'X'			3. EFFLUENT							4. UNITS		5. INTAKE (optional)		
	a. TESTING REQUIRED	b. BELIEVED PRESENT	c. BELIEVED ABSENT	a. MAXIMUM DAILY VALUE		b. MAXIMUM 30 DAY VALUE (if available)		c. LONG TERM AVRG. VALUE (if available)		d. NO. OF ANALYSES	a. CONCENTRATION	b. MASS	a. LONG TERM AVERAGE VALUE		b. NO. OF ANALYSES
				(1) CONCENTRATION	(2) MASS	(1) CONCENTRATION	(2) MASS	(1) CONCENTRATION	(2) MASS				(1) CONCENTRATION	(2) MASS	
GC/MS FRACTION — BASE/NEUTRAL COMPOUNDS *(continued)*															
22B. 1,4-Dichlorobenzene (106-46-7)			x	ND	NA	NA	NA	NA	NA	1	ppm	kg/d	NA	NA	NA
23B. 3,3'-Dichlorobenzidine (91-94-1)			x	ND	NA	NA	NA	NA	NA	1	ppm	kg/d	NA	NA	NA
24B. Diethyl Phthalate (84-66-2)			x	ND	NA	NA	NA	NA	NA	1	ppm	kg/d	NA	NA	NA
25B. Dimethyl Phthalate (131-11-3)			x	ND	NA	NA	NA	NA	NA	1	ppm	kg/d	NA	NA	NA
26B. Di-N-Butyl Phthalate (84-74-2)			x	ND	NA	NA	NA	NA	NA	1	ppm	kg/d	NA	NA	NA
27B. 2,4-Dinitrotoluene (121-14-2)			x	ND	NA	NA	NA	NA	NA	1	ppm	kg/d	NA	NA	NA
28B. 2,6-Dinitrotoluene (606-20-2)			x	ND	NA	NA	NA	NA	NA	1	ppm	kg/d	NA	NA	NA
29B. Di-N-Octyl Phthalate (117-84-0)			x	ND	NA	NA	NA	NA	NA	1	ppm	kg/d	NA	NA	NA
30B. 1,2-Diphenylhydrazine *(as Azobenzene)* (122-66-7)			x	ND	NA	NA	NA	NA	NA	1	ppm	kg/d	NA	NA	NA
31B. Fluoranthene (206-44-0)			x	ND	NA	NA	NA	NA	NA	1	ppm	kg/d	NA	NA	NA
32B. Fluorene (86-73-7)			x	ND	NA	NA	NA	NA	NA	1	ppm	kg/d	NA	NA	NA
33B. Hexachlorobenzene (118-74-1)			x	ND	NA	NA	NA	NA	NA	1	ppm	kg/d	NA	NA	NA
34B. Hexachlorobutadiene (87-68-3)			x	ND	NA	NA	NA	NA	NA	1	ppm	kg/d	NA	NA	NA
35B. Hexachlorocyclopentadiene (77-47-4)			x	ND	NA	NA	NA	NA	NA	1	ppm	kg/d	NA	NA	NA
36B. Hexachloroethane (67-72-1)			x	ND	NA	NA	NA	NA	NA	1	ppm	kg/d	NA	NA	NA
37B. Indeno *(1,2,3-cd)* Pyrene (193-39-5)			x	ND	NA	NA	NA	NA	NA	1	ppm	kg/d	NA	NA	NA
38B. Isophorone (78-59-1)			x	ND	NA	NA	NA	NA	NA	1	ppm	kg/d	NA	NA	NA
39B. Naphthalene (91-20-3)			x	ND	NA	NA	NA	NA	NA	1	ppm	kg/d	NA	NA	NA
40B. Nitrobenzene (98-95-3)			x	ND	NA	NA	NA	NA	NA	1	ppm	kg/d	NA	NA	NA
41B. N-Nitrosodimethylamine (62-75-9)			x	ND	NA	NA	NA	NA	NA	1	ppm	kg/d	NA	NA	NA
42B. N-Nitrosodi-N-Propylamine (621-64-7)			x	ND	NA	NA	NA	NA	NA	1	ppm	kg/d	NA	NA	NA

CONTINUE ON REVERSE

STF ENV441F.11

1. POLLUTANT AND CAS NUMBER (if available)	2. MARK 'X' a. TESTING REQUIRED	b. BELIEVED PRESENT	c. BELIEVED ABSENT	3. EFFLUENT a. MAXIMUM DAILY VALUE (1) CONCENTRATION	(2) MASS	b. MAXIMUM 30 DAY VALUE (if available) (1) CONCENTRATION	(2) MASS	c. LONG TERM AVRG. VALUE (if available) (1) CONCENTRATION	(2) MASS	d. NO. OF ANALYSES	4. UNITS a. CONCENTRATION	b. MASS	5. INTAKE (optional) a. LONG TERM AVERAGE VALUE (1) CONCENTRATION	(2) MASS	b. NO. OF ANALYSES
GC/MS FRACTION — BASE/NEUTRAL COMPOUNDS *(continued)*															
43B. N-Nitrosodiphenylamine (86-30-6)			x	ND	NA	NA	NA	NA	NA	1	ppm	kg/d	NA	NA	NA
44B. Phenanthrene (85-01-8)			x	ND	NA	NA	NA	NA	NA	1	ppm	kg/d	NA	NA	NA
45B. Pyrene (129-00-0)			x	ND	NA	NA	NA	NA	NA	1	ppm	kg/d	NA	NA	NA
46B. 1,2,4-Trichlorobenzene (120-82-1)			x	ND	NA	NA	NA	NA	NA	1	ppm	kg/d	NA	NA	NA
GC/MS FRACTION — PESTICIDES															
1P. Aldrin (309-00-2)			x	ND	NA	NA	NA	NA	NA	1	ppm	kg/d	NA	NA	NA
2P. α-BHC (319-84-6)			x	ND	NA	NA	NA	NA	NA	1	ppm	kg/d	NA	NA	NA
3P. β-BHC (319-85-7)			x	ND	NA	NA	NA	NA	NA	1	ppm	kg/d	NA	NA	NA
4P. γ-BHC (58-89-9)			x	ND	NA	NA	NA	NA	NA	1	ppm	kg/d	NA	NA	NA
5P. δ-BHC (319-86-8)			x	ND	NA	NA	NA	NA	NA	1	ppm	kg/d	NA	NA	NA
6P. Chlordane (57-74-9)			x	ND	NA	NA	NA	NA	NA	1	ppm	kg/d	NA	NA	NA
7P. 4,4'-DDT (50-29-3)			x	ND	NA	NA	NA	NA	NA	1	ppm	kg/d	NA	NA	NA
8P. 4,4'-DDE (72-55-9)			x	ND	NA	NA	NA	NA	NA	1	ppm	kg/d	NA	NA	NA
9P. 4,4'-DDD (72-54-8)			x	ND	NA	NA	NA	NA	NA	1	ppm	kg/d	NA	NA	NA
10P. Dieldrin (60-57-1)			x	ND	NA	NA	NA	NA	NA	1	ppm	kg/d	NA	NA	NA
11P. α-Endosulfan (115-29-7)			x	ND	NA	NA	NA	NA	NA	1	ppm	kg/d	NA	NA	NA
12P. β-Endosulfan (115-29-7)			x	ND	NA	NA	NA	NA	NA	1	ppm	kg/d	NA	NA	NA
13P. Endosulfan Sulfate (1031-07-8)			x	ND	NA	NA	NA	NA	NA	1	ppm	kg/d	NA	NA	NA
14P. Endrin (72-20-8)			x	ND	NA	NA	NA	NA	NA	1	ppm	kg/d	NA	NA	NA
15P. Endrin Aldehyde (7421-93-4)			x	ND	NA	NA	NA	NA	NA	1	ppm	kg/d	NA	NA	NA
16P. Heptachlor (76-44-8)			x	ND	NA	NA	NA	NA	NA	1	ppm	kg/d	NA	NA	NA

CONTINUE ON PAGE V-9

NORTH ANNA

EPA I.D. NUMBER (copy from Item 1 of Form 1)	OUTFALL NUMBER
VAD065376279	110 (109)

Hot Well Drain Unit 2

CONTINUED FROM PAGE V-8

1. POLLUTANT AND CAS NUMBER (if available)	2. MARK 'X'			3. EFFLUENT							4. UNITS		5. INTAKE (optional)		
	a. TESTING REQUIRED	b. BELIEVED PRESENT	c. BELIEVED ABSENT	a. MAXIMUM DAILY VALUE		b. MAXIMUM 30 DAY VALUE (if available)		c. LONG TERM AVRG. VALUE (if available)		d. NO. OF ANALYSES	a. CONCENTRATION	b. MASS	a. LONG TERM AVERAGE VALUE		b. NO. OF ANALYSES
				(1) CONCENTRATION	(2) MASS	(1) CONCENTRATION	(2) MASS	(1) CONCENTRATION	(2) MASS				(1) CONCENTRATION	(2) MASS	
GC/MS FRACTION — PESTICIDES *(continued)*															
17P. Heptachlor Epoxide (1024-57-3)			x	ND	NA	NA	NA	NA	NA	1	ppm	kg/d	NA	NA	NA
18P. PCB-1242 (53469-21-9)			x	ND	NA	NA	NA	NA	NA	1	ppm	kg/d	NA	NA	NA
19P. PCB-1254 (11097-69-1)			x	ND	NA	NA	NA	NA	NA	1	ppm	kg/d	NA	NA	NA
20P. PCB-1221 (11104-28-2)			x	ND	NA	NA	NA	NA	NA	1	ppm	kg/d	NA	NA	NA
21P. PCB-1232 (11141-16-5)			x	ND	NA	NA	NA	NA	NA	1	ppm	kg/d	NA	NA	NA
22P. PCB-1248 (12672-29-6)			x	ND	NA	NA	NA	NA	NA	1	ppm	kg/d	NA	NA	NA
23P. PCB-1260 (11096-82-5)			x	ND	NA	NA	NA	NA	NA	1	ppm	kg/d	NA	NA	NA
24P. PCB-1016 (12674-11-2)			x	ND	NA	NA	NA	NA	NA	1	ppm	kg/d	NA	NA	NA
25P. Toxaphene (8001-35-2)			x	ND	NA	NA	NA	NA	NA	1	ppm	kg/d	NA	NA	NA

NORTH ANNA POWER STATION

PLEASE PRINT OR TYPE IN THE UNSHADED AREAS ONLY. You may report some or all of this information on separate sheets *(use the same format)* instead of completing these pages. SEE INSTRUCTIONS.

EPA I.D. NUMBER *(copy from Item 1 of Form 1)*: VAD065376279

Steam Generator Blowdown

V. INTAKE AND EFFLUENT CHARACTERISTICS *(continued from page 3 of Form 2-C)*

SEE ADDENDUM FOR MORE INFO.

OUTFALL NO. 112 (113)

PART A - You must provide the results of at least one analysis for every pollutant in this table. Complete one table for each outfall. See instructions for additional details.

1. POLLUTANT	2. EFFLUENT a. MAXIMUM DAILY VALUE (1) CONCENTRATION	a. MAXIMUM DAILY VALUE (2) MASS	b. MAXIMUM 30 DAY VALUE *(if available)* (1) CONCENTRATION	b. MAXIMUM 30 DAY VALUE (2) MASS	c. LONG TERM AVRG. VALUE *(if available)* (1) CONCENTRATION	c. LONG TERM AVRG. VALUE (2) MASS	d. NO. OF ANALYSES	3. UNITS *(specify if blank)* a. CONCENTRATION	3. UNITS b. MASS	4. INTAKE *(optional)* a. LONG TERM AVERAGE VALUE (1) CONCENTRATION	4. INTAKE a. LONG TERM AVERAGE VALUE (2) MASS	b. NO. OF ANALYSES
a. Biochemical Oxygen Demand *(BOD)*	7.74	6.0	NA	NA	NA	NA	1	ppm	kg/d	NA	NA	NA
b. Chemical Oxygen Demand *(COD)*	ND	NA	NA	NA	NA	NA	1	ppm	kg/d	NA	NA	NA
c. Total Organic Carbon *(TOC)*	4.9	3.8	NA	NA	NA	NA	1	ppm	kg/d	NA	NA	NA
d. Total Suspended Solids *(TSS)*	3.3	2.6	3.3	2.6	<1.02	<0.8	12	ppm	kg/d	NA	NA	NA
e. Ammonia *(as N)*	0.46	0.4	NA	NA	NA	NA	1	ppm	kg/d	NA	NA	NA
f. Flow	VALUE 0.21		VALUE 0.21		VALUE * 0.206		12	MGD	NA	VALUE NA		NA
g. Temperature *(winter)*	VALUE NA		VALUE NA		VALUE NA		NA	°C		VALUE NA		NA
h. Temperature *(summer)*	VALUE 35.0		VALUE NA		VALUE NA		1	°C		VALUE NA		NA
i. pH	MINIMUM 6.8	MAXIMUM 7.3	MINIMUM 6.8	MAXIMUM 7.3			12	STANDARD UNITS				

PART B - Mark "X" in column 2-a for each pollutant you know or have reason to believe is present. Mark "X" in column 2-b for each pollutant you believe to be absent. If you mark column 2a for any pollutant which is limited either directly, or indirectly but expressly, in an effluent limitations guideline, you must provide the results of at least one analysis for that pollutant. For other pollutants for which you mark column 2a, you must provide quantitative data or an explanation of their presence in your discharge. Complete one table for each outfall. See the instructions for additional details and requirements.

1. POLLUTANT AND CAS NO. *(if available)*	2. MARK 'X' a. BELIEVED PRESENT	2. MARK 'X' b. BELIEVED ABSENT	3. EFFLUENT a. MAXIMUM DAILY VALUE (1) CONCENTRATION	a. MAXIMUM DAILY VALUE (2) MASS	b. MAXIMUM 30 DAY VALUE *(if available)* (1) CONCENTRATION	b. MAXIMUM 30 DAY VALUE (2) MASS	c. LONG TERM AVRG. VALUE *(if available)* (1) CONCENTRATION	c. LONG TERM AVRG. VALUE (2) MASS	d. NO. OF ANALYSES	4. UNITS a. CONCENTRATION	4. UNITS b. MASS	5. INTAKE *(optional)* a. LONG TERM AVERAGE VALUE (1) CONCENTRATION	5. INTAKE a. LONG TERM AVERAGE VALUE (2) MASS	b. NO. OF ANALYSES
a. Bromide (24959-67-9)	X		0.32	0.2	NA	NA	NA	NA	1	ppm	kg/d	NA	NA	NA
b. Chlorine, Total Residual		X	ND	NA	NA	NA	NA	NA	1	ppm	kg/d	NA	NA	NA
c. Color	X		20	NA	NA	NA	NA	NA	1	color units	NA	NA	NA	NA
d. Fecal Coliform		X	NA	NA	NA	NA	NA	NA	NA	col/100ml	NA	NA	NA	NA
e. Fluoride (16984-48-8)	X	X	0.122	0.1	NA	NA	NA	NA	1	ppm	kg/d	NA	NA	NA
f. Nitrate—Nitrite *(as N)*		X	ND	NA	NA	NA	NA	NA	1	ppm	kg/d	NA	NA	NA

CONTINUE ON REVERSE

*** Long term average flow (1999) used to calculate all mass values.**

VAD065376279 NORTH ANNA POWER STATION **OUTFALL 112 (113)** **Steam Generator Blowdown**

1. POLLUTANT AND CAS NO. (if available)	2. MARK 'X' a. BELIEVED PRESENT	2. MARK 'X' b. BELIEVED ABSENT	3. EFFLUENT a. MAXIMUM DAILY VALUE (1) CONCENTRATION	a. MAXIMUM DAILY VALUE (2) MASS	b. MAXIMUM 30 DAY VALUE (if available) (1) CONCENTRATION	b. MAXIMUM 30 DAY VALUE (2) MASS	c. LONG TERM AVRG. VALUE (if available) (1) CONCENTRATION	c. LONG TERM AVRG. VALUE (2) MASS	d. NO. OF ANALYSES	4. UNITS a. CONCENTRATION	4. UNITS b. MASS	5. INTAKE (optional) a. LONG TERM AVERAGE VALUE (1) CONCENTRATION	a. LONG TERM AVERAGE VALUE (2) MASS	b. NO. OF ANALYSES
g. Nitrogen, Total Organic (as N)	x		1.6	1.25	NA	NA	NA	NA	1	ppm	kg/d	NA	NA	NA
h. Oil and Grease		x	ND	NA	ND	NA	ND	NA	12	ppm	kg/d	NA	NA	NA
i. Phosphorus (as P), Total (7723-14-0)	x		0.01	0.01	NA	NA	NA	NA	1	ppm	kg/d	NA	NA	NA
j. Radioactivity														
(1) Alpha, Total	x		0.06	NA	NA	NA	NA	NA	1	pCi/L	NA	NA	NA	NA
(2) Beta, Total	x		<0.8	NA	NA	NA	NA	NA	1	pCi/L	NA	NA	NA	NA
(3) Radium, Total		x	NA	NA	NA	NA	NA	NA	NA	NA	NA	NA	NA	NA
(4) Radium 226, Total		x	NA	NA	NA	NA	NA	NA	NA	NA	NA	NA	NA	NA
k. Sulfate (as SO_4) (14808-79-8)		x	ND	NA	NA	NA	NA	NA	1	ppm	kg/d	NA	NA	NA
l. Sulfide (as S)	x		0.02	0.02	NA	NA	NA	NA	1	ppm	kg/d	NA	NA	NA
m. Sulfite (as SO_3) (14265-45-3)		x	NA	NA	NA	NA	NA	NA	NA	ppm	kg/d	NA	NA	NA
n. Surfactants		x	ND	NA	NA	NA	NA	NA	1	ppm	kg/d	NA	NA	NA
o. Aluminum, Total (7429-90-5)	x		0.46	0.4	NA	NA	NA	NA	1	ppm	kg/d	NA	NA	NA
p. Barium, Total (7440-39-3)	x		0.004	0.003	NA	NA	NA	NA	1	ppm	kg/d	NA	NA	NA
q. Boron, Total (7440-42-8)		x	ND	NA	NA	NA	NA	NA	1	ppm	kg/d	NA	NA	NA
r. Cobalt, Total (7440-48-4)		x	ND	NA	NA	NA	NA	NA	1	ppm	kg/d	NA	NA	NA
s. Iron, Total (7439-89-6)	x		0.48	0.4	NA	NA	NA	NA	1	ppm	kg/d	NA	NA	NA
t. Magnesium, Total (7439-95-4)		x	ND	NA	NA	NA	NA	NA	1	ppm	kg/d	NA	NA	NA
u. Molybdenum, Total (7439-98-7)		x	ND	NA	NA	NA	NA	NA	1	ppm	kg/d	NA	NA	NA
v. Manganese, Total (7439-96-5)	x		0.029	0.02	NA	NA	NA	NA	1	ppm	kg/d	NA	NA	NA
w. Tin, Total (7440-31-5)		x	ND	NA	NA	NA	NA	NA	1	ppm	kg/d	NA	NA	NA
x. Titanium, Total (7440-32-6)		x	ND	NA	NA	NA	NA	NA	1	ppm	kg/d	NA	NA	NA

CONTINUE ON PAGE V-3

NORTH ANNA POWER STATION

EPA I.D. NUMBER (copy from Item 1 of Form 1)	OUTFALL NUMBER
VAD065376279	112 (113)

Steam Generator Blowdown

CONTINUED FROM PAGE 3 OF FORM 2-C

PART C - If you are a primary industry and this outfall contains process wastewater, refer to Table 2c-2 in the instructions to determine which of the GC/MS fractions you must test for. Mark "X" in column 2-a for all such GC/MS fractions that apply to your industry and for ALL toxic metals, cyanides, and total phenols. If you are not required to mark column 2-a *(secondary industries, nonprocess wastewater outfalls, and nonrequired GC/MS fractions)*, mark "X" in column 2-b for each pollutant you know or have reason to believe is present. Mark "X" in column 2-c for each pollutant you believe is absent. If you mark column 2a for any pollutant, you must provide the results of at least one analysis for that pollutant. If you mark column 2b for any pollutant, you must provide the results of at least one analysis for that pollutant if you know or have reason to believe it will be discharged in concentrations of 10 ppb or greater. If you mark column 2b for acrolein, acrylonitrile, 2,4 dinitrophenol, or 2-methyl-4, 6 dinitrophenol, you must provide the results of at least one analysis for each of these pollutants which you know or have reason to believe that you discharge in concentrations of 100 ppb or greater. Otherwise, for pollutants for which you mark column 2b, you must either submit at least one analysis or briefly describe the reasons the pollutant is expected to be discharged. Note that there are 7 pages to this part; please review each carefully. Complete one table *(all 7 pages)* for each outfall. See instructions for additional details and requirements.

1. POLLUTANT AND CAS NUMBER (if available)	2. MARK 'X'			3. EFFLUENT							4. UNITS		5. INTAKE (optional)		
	a. TESTING REQUIRED	b. BELIEVED PRESENT	c. BELIEVED ABSENT	a. MAXIMUM DAILY VALUE (1) CONCENTRATION	a. MAXIMUM DAILY VALUE (2) MASS	b. MAXIMUM 30 DAY VALUE (if available) (1) CONCENTRATION	b. MAXIMUM 30 DAY VALUE (if available) (2) MASS	c. LONG TERM AVRG. VALUE (if available) (1) CONCENTRATION	c. LONG TERM AVRG. VALUE (if available) (2) MASS	d. NO. OF ANALYSES	a. CONCENTRATION	b. MASS	a. LONG TERM AVERAGE VALUE (1) CONCENTRATION	a. LONG TERM AVERAGE VALUE (2) MASS	b. NO. OF ANALYSES
METALS, CYANIDE, AND TOTAL PHENOLS															
1M. Antimony, Total (7440-36-0)			x	ND	NA	NA	NA	NA	NA	1	ppm	kg/d	NA	NA	NA
2M. Arsenic, Total (7440-38-2)			x	ND	NA	NA	NA	NA	NA	1	ppm	kg/d	NA	NA	NA
3M. Beryllium, Total, 7440-41-7)			x	ND	NA	NA	NA	NA	NA	1	ppm	kg/d	NA	NA	NA
4M. Cadmium, Total (7440-43-9)			x	ND	NA	NA	NA	NA	NA	1	ppm	kg/d	NA	NA	NA
5M. Chromium, Total (7440-47-3)			x	ND	NA	NA	NA	NA	NA	1	ppm	kg/d	NA	NA	NA
6M. Copper, Total (7440-50-8)		x		0.018	0.01	NA	NA	NA	NA	1	ppm	kg/d	NA	NA	NA
7M. Lead, Total (7439-92-1)		x		0.002	0.002	NA	NA	NA	NA	1	ppm	kg/d	NA	NA	NA
8M. Mercury, Total (7439-97-6)			x	ND	NA	NA	NA	NA	NA	1	ppm	kg/d	NA	NA	NA
9M. Nickel, Total (7440-02-0)			x	ND	NA	NA	NA	NA	NA	1	ppm	kg/d	NA	NA	NA
10M. Selenium, Total (7782-49-2)			x	ND	NA	NA	NA	NA	NA	1	ppm	kg/d	NA	NA	NA
11M. Silver, Total (7440-22-4)			x	ND	NA	NA	NA	NA	NA	1	ppm	kg/d	NA	NA	NA
12M. Thallium, Total (7440-28-0)			x	ND	NA	NA	NA	NA	NA	1	ppm	kg/d	NA	NA	NA
13M. Zinc, Total (7440-66-6)			x	ND	NA	NA	NA	NA	NA	1	ppm	kg/d	NA	NA	NA
14M. Cyanide, Total (57-12-5)			x	ND	NA	NA	NA	NA	NA	1	ppm	kg/d	NA	NA	NA
15M. Phenols, Total		x		0.03	0.02	NA	NA	NA	NA	1	ppm	kg/d	NA	NA	NA
DIOXIN															
2,3,7,8 Tetrachlorodibenzo-P-Dioxin (1764-01-6)			x	DESCRIBE RESULTS NA											

CONTINUE ON REVERSE

STF ENV441F 7

VAD065376279 NORTH ANNA POWER STATION

OUTFALL 112 (113) Steam Generator Blowdown

1. POLLUTANT AND CAS NUMBER (if available)	2. MARK 'X'			3. EFFLUENT							4. UNITS		5. INTAKE (optional)		
	a. TESTING REQUIRED	b. BELIEVED PRESENT	c. BELIEVED ABSENT	a. MAXIMUM DAILY VALUE		b. MAXIMUM 30 DAY VALUE (if available)		c. LONG TERM AVRG. VALUE (if available)		d. NO. OF ANALYSES	a. CONCENTRATION	b. MASS	a. LONG TERM AVERAGE VALUE		b. NO. OF ANALYSES
				(1) CONCENTRATION	(2) MASS	(1) CONCENTRATION	(2) MASS	(1) CONCENTRATION	(2) MASS				(1) CONCENTRATION	(2) MASS	
GC/MS FRACTION — VOLATILE COMPOUNDS															
1V. Acrolein (107-02-8)			x	ND	NA	NA	NA	NA	NA	1	ppm	kg/d	NA	NA	NA
2V. Acrylonitrile (107-13-1)			x	ND	NA	NA	NA	NA	NA	1	ppm	kg/d	NA	NA	NA
3V. Benzene (71-43-2)			x	ND	NA	NA	NA	NA	NA	1	ppm	kg/d	NA	NA	NA
4V. Bis (*Chloromethyl*) Ether (542-88-1)			NA	not	required	not	required	not	required	NA	NA	NA	NA	NA	NA
5V. Bromoform (75-25-2)			x	ND	NA	NA	NA	NA	NA	1	ppm	kg/d	NA	NA	NA
6V. Carbon Tetrachloride (56-23-5)			x	ND	NA	NA	NA	NA	NA	1	ppm	kg/d	NA	NA	NA
7V. Chlorobenzene (108-90-7)			x	ND	NA	NA	NA	NA	NA	1	ppm	kg/d	NA	NA	NA
8V. Chlorodibromomethane (124-48-1)			x	ND	NA	NA	NA	NA	NA	1	ppm	kg/d	NA	NA	NA
9V. Chloroethane (75-00-3)			x	ND	NA	NA	NA	NA	NA	1	ppm	kg/d	NA	NA	NA
10V. 2-Chloroethylvinyl Ether (110-75-8)			x	ND	NA	NA	NA	NA	NA	1	ppm	kg/d	NA	NA	NA
11V. Chloroform (67-66-3)			x	ND	NA	NA	NA	NA	NA	1	ppm	kg/d	NA	NA	NA
12V. Dichlorobromomethane (75-27-4)			x	ND	NA	NA	NA	NA	NA	1	ppm	kg/d	NA	NA	NA
13V. Dichlorodifluoromethane (75-71-8)			NA	not	required	not	required	not	required	NA	NA	NA	NA	NA	NA
14V. 1,1-Dichloroethane (75-34-3)			x	ND	NA	NA	NA	NA	NA	1	ppm	kg/d	NA	NA	NA
15V. 1,2-Dichloroethane (107-06-2)			x	ND	NA	NA	NA	NA	NA	1	ppm	kg/d	NA	NA	NA
16V. 1,1-Dichloroethylene (75-35-4)			x	ND	NA	NA	NA	NA	NA	1	ppm	kg/d	NA	NA	NA
17V. 1,2-Dichloropropane (78-87-5)			x	ND	NA	NA	NA	NA	NA	1	ppm	kg/d	NA	NA	NA
18V. 1,3-Dichloropropylene (542-75-6)			x	ND	NA	NA	NA	NA	NA	1	ppm	kg/d	NA	NA	NA
19V. Ethylbenzene (100-41-4)			x	ND	NA	NA	NA	NA	NA	1	ppm	kg/d	NA	NA	NA
20V. Methyl Bromide (74-83-9)			x	ND	NA	NA	NA	NA	NA	1	ppm	kg/d	NA	NA	NA
21V. Methyl Chloride (74-87-3)			x	ND	NA	NA	NA	NA	NA	1	ppm	kg/d	NA	NA	NA

CONTINUE ON PAGE V-5

NORTH ANNA POWER STATION

EPA I.D. NUMBER (copy from Item 1 of Form 1)	OUTFALL NUMBER
VAD065376279	112 (113)

Steam Generator Blowdown

CONTINUED FROM PAGE V-4

1. POLLUTANT AND CAS NUMBER (if available)	2. MARK 'X'			3. EFFLUENT							4. UNITS		5. INTAKE (optional)		
	a. TESTING REQUIRED	b. BELIEVED PRESENT	c. BELIEVED ABSENT	a. MAXIMUM DAILY VALUE		b. MAXIMUM 30 DAY VALUE (if available)		c. LONG TERM AVRG. VALUE (if available)		d. NO. OF ANALYSES	a. CONCENTRATION	b. MASS	a. LONG TERM AVERAGE VALUE		b. NO. OF ANALYSES
				(1) CONCENTRATION	(2) MASS	(1) CONCENTRATION	(2) MASS	(1) CONCENTRATION	(2) MASS				(1) CONCENTRATION	(2) MASS	
GC/MS FRACTION — VOLATILE COMPOUNDS *(continued)*															
22V. Methylene Chloride (75-09-2)			x	ND	NA	NA	NA	NA	NA	1	ppm	kg/d	NA	NA	NA
23V. 1,1,2,2-Tetrachloroethane (79-34-5)			x	ND	NA	NA	NA	NA	NA	1	ppm	kg/d	NA	NA	NA
24V. Tetrachloroethylene (127-18-4)			x	ND	NA	NA	NA	NA	NA	1	ppm	kg/d	NA	NA	NA
25V. Toluene (108-88-3)			x	ND	NA	NA	NA	NA	NA	1	ppm	kg/d	NA	NA	NA
26V. 1,2-Trans-Dichloroethylene (156-60-5)			x	ND	NA	NA	NA	NA	NA	1	ppm	kg/d	NA	NA	NA
27V. 1,1,1-Trichloroethane (71-55-6)			x	ND	NA	NA	NA	NA	NA	1	ppm	kg/d	NA	NA	NA
28V. 1,1,2-Trichloroethane (79-00-5)			x	ND	NA	NA	NA	NA	NA	1	ppm	kg/d	NA	NA	NA
29V. Trichloroethylene (79-01-6)			x	ND	NA	NA	NA	NA	NA	1	ppm	kg/d	NA	NA	NA
30V. Trichlorofluoromethane (75-69-4)			NA	not	required	not	required	not	required	NA	NA	NA	NA	NA	NA
31V. Vinyl Chloride (75-01-4)			x	ND	NA	NA	NA	NA	NA	1	ppm	kg/d	NA	NA	NA
GC/MS FRACTION — ACID COMPOUNDS															
1A. 2-Chlorophenol (95-57-8)			x	ND	NA	NA	NA	NA	NA	1	ppm	kg/d	NA	NA	NA
2A. 2,4-Dichlorophenol (120-83-2)			x	ND	NA	NA	NA	NA	NA	1	ppm	kg/d	NA	NA	NA
3A. 2,4-Dimethylphenol (105-67-9)			x	ND	NA	NA	NA	NA	NA	1	ppm	kg/d	NA	NA	NA
4A. 4,6-Dinitro-O-Cresol (534-52-1)			x	ND	NA	NA	NA	NA	NA	1	ppm	kg/d	NA	NA	NA
5A. 2,4-Dinitrophenol (51-28-5)			x	ND	NA	NA	NA	NA	NA	1	ppm	kg/d	NA	NA	NA
6A. 2-Nitrophenol (88-75-5)			x	ND	NA	NA	NA	NA	NA	1	ppm	kg/d	NA	NA	NA
7A. 4-Nitrophenol (100-02-7)			x	ND	NA	NA	NA	NA	NA	1	ppm	kg/d	NA	NA	NA
8A. P-Chloro-M-Cresol (59-50-7)			x	ND	NA	NA	NA	NA	NA	1	ppm	kg/d	NA	NA	NA
9A. Pentachlorophenol (87-86-5)			x	ND	NA	NA	NA	NA	NA	1	ppm	kg/d	NA	NA	NA
10A. Phenol (108-95-2)			x	ND	NA	NA	NA	NA	NA	1	ppm	kg/d	NA	NA	NA
11A. 2,4,6-Trichlorophenol (88-06-2)			x	ND	NA	NA	NA	NA	NA	1	ppm	kg/d	NA	NA	NA

CONTINUE ON REVERSE

STF ENV441F.9

VAD065376279 NORTH ANNA POWER STATION

OUTFALL 112 (113) Steam Generator Blowdown

1. POLLUTANT AND CAS NUMBER (if available)	2. MARK 'X'			3. EFFLUENT							4. UNITS		5. INTAKE (optional)		
	a. TESTING REQUIRED	b. BELIEVED PRESENT	c. BELIEVED ABSENT	a. MAXIMUM DAILY VALUE		b. MAXIMUM 30 DAY VALUE (if available)		c. LONG TERM AVRG. VALUE (if available)		d. NO. OF ANALYSES	a. CONCENTRATION	b. MASS	a. LONG TERM AVERAGE VALUE		b. NO. OF ANALYSES
				(1) CONCENTRATION	(2) MASS	(1) CONCENTRATION	(2) MASS	(1) CONCENTRATION	(2) MASS				(1) CONCENTRATION	(2) MASS	
GC/MS FRACTION — BASE/NEUTRAL COMPOUNDS															
1B. Acenaphthene (83-32-9)			x	ND	NA	NA	NA	NA	NA	1	ppm	kg/d	NA	NA	NA
2B. Acenaphtylene (208-96-8)			x	ND	NA	NA	NA	NA	NA	1	ppm	kg/d	NA	NA	NA
3B. Anthracene (120-12-7)			x	ND	NA	NA	NA	NA	NA	1	ppm	kg/d	NA	NA	NA
4B. Benzidine (92-87-5)			x	ND	NA	NA	NA	NA	NA	1	ppm	kg/d	NA	NA	NA
5B. Benzo *(a)* Anthracene (56-55-3)			x	ND	NA	NA	NA	NA	NA	1	ppm	kg/d	NA	NA	NA
6B. Benzo *(a)* Pyrene (50-32-8)			x	ND	NA	NA	NA	NA	NA	1	ppm	kg/d	NA	NA	NA
7B. 3,4-Benzo-fluoranthene (205-99-2)			x	ND	NA	NA	NA	NA	NA	1	ppm	kg/d	NA	NA	NA
8B. Benzo *(ghi)* Perylene (191-24-2)			x	ND	NA	NA	NA	NA	NA	1	ppm	kg/d	NA	NA	NA
9B. Benzo *(k)* Fluoranthene (207-08-9)			x	ND	NA	NA	NA	NA	NA	1	ppm	kg/d	NA	NA	NA
10B. Bis *(2-Chloro-ethoxy)* Methane (111-91-1)			x	ND	NA	NA	NA	NA	NA	1	ppm	kg/d	NA	NA	NA
11B. Bis *(2-Chloro-ethyl)* Ether (111-44-4)			x	ND	NA	NA	NA	NA	NA	1	ppm	kg/d	NA	NA	NA
12B. Bis *(2-Chloroiso-propyl)* Ether (102-60-1)			x	ND	NA	NA	NA	NA	NA	1	ppm	kg/d	NA	NA	NA
13B. Bis *(2-Ethyl-hexyl)* Phthalate (117-81-7)			x	ND	NA	NA	NA	NA	NA	1	ppm	kg/d	NA	NA	NA
14B. 4-Bromo-phenyl Phenyl Ether (101-55-3)			x	ND	NA	NA	NA	NA	NA	1	ppm	kg/d	NA	NA	NA
15B. Butyl Benzyl Phthalate (85-68-7)			x	ND	NA	NA	NA	NA	NA	1	ppm	kg/d	NA	NA	NA
16B. 2-Chloro-naphthalene (91-58-7)			x	ND	NA	NA	NA	NA	NA	1	ppm	kg/d	NA	NA	NA
17B. 4-Chloro-phenyl Phenyl Ether (7005-72-3)			x	ND	NA	NA	NA	NA	NA	1	ppm	kg/d	NA	NA	NA
18B. Chrysene (218-01-9)			x	ND	NA	NA	NA	NA	NA	1	ppm	kg/d	NA	NA	NA
19B. Dibenzo *(a, h)* Anthracene (53-70-3)			x	ND	NA	NA	NA	NA	NA	1	ppm	kg/d	NA	NA	NA
20B. 1,2-Dichloro-benzene (95-50-1)			x	ND	NA	NA	NA	NA	NA	1	ppm	kg/d	NA	NA	NA
21B. 1,3-Dichloro-benzene (541-73-1)			x	ND	NA	NA	NA	NA	NA	1	ppm	kg/d	NA	NA	NA

CONTINUE ON PAGE V-7

NORTH ANNA POWER STATION

EPA I.D. NUMBER (copy from Item 1 of Form 1)	OUTFALL NUMBER
VAD065376279	112 (113)

Steam Generator Blowdown

CONTINUED FROM PAGE V-6

1. POLLUTANT AND CAS NUMBER (if available)	2. MARK 'X'			3. EFFLUENT							4. UNITS		5. INTAKE (optional)		
	a. TESTING REQUIRED	b. BELIEVED PRESENT	c. BELIEVED ABSENT	a. MAXIMUM DAILY VALUE		b. MAXIMUM 30 DAY VALUE (if available)		c. LONG TERM AVRG. VALUE (if available)		d. NO. OF ANALYSES	a. CONCENTRATION	b. MASS	a. LONG TERM AVERAGE VALUE		b. NO. OF ANALYSES
				(1) CONCENTRATION	(2) MASS	(1) CONCENTRATION	(2) MASS	(1) CONCENTRATION	(2) MASS				(1) CONCENTRATION	(2) MASS	
GC/MS FRACTION — BASE/NEUTRAL COMPOUNDS (continued)															
22B. 1,4-Dichlorobenzene (106-46-7)			x	ND	NA	NA	NA	NA	NA	1	ppm	kg/d	NA	NA	NA
23B. 3,3'-Dichlorobenzidine (91-94-1)			x	ND	NA	NA	NA	NA	NA	1	ppm	kg/d	NA	NA	NA
24B. Diethyl Phthalate (84-66-2)			x	ND	NA	NA	NA	NA	NA	1	ppm	kg/d	NA	NA	NA
25B. Dimethyl Phthalate (131-11-3)			x	ND	NA	NA	NA	NA	NA	1	ppm	kg/d	NA	NA	NA
26B. Di-N-Butyl Phthalate (84-74-2)			x	ND	NA	NA	NA	NA	NA	1	ppm	kg/d	NA	NA	NA
27B. 2,4-Dinitrotoluene (121-14-2)			x	ND	NA	NA	NA	NA	NA	1	ppm	kg/d	NA	NA	NA
28B. 2,6-Dinitrotoluene (606-20-2)			x	ND	NA	NA	NA	NA	NA	1	ppm	kg/d	NA	NA	NA
29B. Di-N-Octyl Phthalate (117-84-0)			x	ND	NA	NA	NA	NA	NA	1	ppm	kg/d	NA	NA	NA
30B. 1,2-Diphenylhydrazine *(as Azobenzene)* (122-66-7)			x	ND	NA	NA	NA	NA	NA	1	ppm	kg/d	NA	NA	NA
31B. Fluoranthene (206-44-0)			x	ND	NA	NA	NA	NA	NA	1	ppm	kg/d	NA	NA	NA
32B. Fluorene (86-73-7)			x	ND	NA	NA	NA	NA	NA	1	ppm	kg/d	NA	NA	NA
33B. Hexachlorobenzene (118-74-1)			x	ND	NA	NA	NA	NA	NA	1	ppm	kg/d	NA	NA	NA
34B. Hexachlorobutadiene (87-68-3)			x	ND	NA	NA	NA	NA	NA	1	ppm	kg/d	NA	NA	NA
35B. Hexachlorocyclopentadiene (77-47-4)			x	ND	NA	NA	NA	NA	NA	1	ppm	kg/d	NA	NA	NA
36B. Hexachloroethane (67-72-1)			x	ND	NA	NA	NA	NA	NA	1	ppm	kg/d	NA	NA	NA
37B. Indeno *(1,2,3-cd)* Pyrene (193-39-5)			x	ND	NA	NA	NA	NA	NA	1	ppm	kg/d	NA	NA	NA
38B. Isophorone (78-59-1)			x	ND	NA	NA	NA	NA	NA	1	ppm	kg/d	NA	NA	NA
39B. Naphthalene (91-20-3)			x	ND	NA	NA	NA	NA	NA	1	ppm	kg/d	NA	NA	NA
40B. Nitrobenzene (98-95-3)			x	ND	NA	NA	NA	NA	NA	1	ppm	kg/d	NA	NA	NA
41B. N-Nitrosodimethylamine (62-75-9)			x	ND	NA	NA	NA	NA	NA	1	ppm	kg/d	NA	NA	NA
42B. N-Nitrosodi-N-Propylamine (621-64-7)			x	ND	NA	NA	NA	NA	NA	1	ppm	kg/d	NA	NA	NA

CONTINUE ON REVERSE

1. POLLUTANT AND CAS NUMBER (if available)	2. MARK 'X'			3. EFFLUENT							4. UNITS		5. INTAKE (optional)		
	a. TESTING REQUIRED	b. BELIEVED PRESENT	c. BELIEVED ABSENT	a. MAXIMUM DAILY VALUE		b. MAXIMUM 30 DAY VALUE (if available)		c. LONG TERM AVRG. VALUE (if available)		d. NO. OF ANALYSES	a. CONCENTRATION	b. MASS	a. LONG TERM AVERAGE VALUE		b. NO. OF ANALYSES
				(1) CONCENTRATION	(2) MASS	(1) CONCENTRATION	(2) MASS	(1) CONCENTRATION	(2) MASS				(1) CONCENTRATION	(2) MASS	
GC/MS FRACTION — BASE/NEUTRAL COMPOUNDS *(continued)*															
43B. N-Nitrosodiphenylamine (86-30-6)			x	ND	NA	NA	NA	NA	NA	1	ppm	kg/d	NA	NA	NA
44B. Phenanthrene (85-01-8)			x	ND	NA	NA	NA	NA	NA	1	ppm	kg/d	NA	NA	NA
45B. Pyrene (129-00-0)			x	ND	NA	NA	NA	NA	NA	1		kg/d	NA	NA	NA
46B. 1,2,4-Trichlorobenzene (120-82-1)			x	ND	NA	NA	NA	NA	NA	1	ppm	kg/d	NA	NA	NA
GC/MS FRACTION — PESTICIDES															
1P. Aldrin (309-00-2)			x	ND	NA	NA	NA	NA	NA	1	ppm	kg/d	NA	NA	NA
2P. α-BHC (319-84-6)			x	ND	NA	NA	NA	NA	NA	1	ppm	kg/d	NA	NA	NA
3P. β-BHC (319-85-7)			x	ND	NA	NA	NA	NA	NA	1	ppm	kg/d	NA	NA	NA
4P. γ-BHC (58-89-9)			x	ND	NA	NA	NA	NA	NA	1	ppm	kg/d	NA	NA	NA
5P. δ-BHC (319-86-8)			x	ND	NA	NA	NA	NA	NA	1	ppm	kg/d	NA	NA	NA
6P. Chlordane (57-74-9)			x	ND	NA	NA	NA	NA	NA	1	ppm	kg/d	NA	NA	NA
7P. 4,4'-DDT (50-29-3)			x	ND	NA	NA	NA	NA	NA	1	ppm	kg/d	NA	NA	NA
8P. 4,4'-DDE (72-55-9)			x	ND	NA	NA	NA	NA	NA	1	ppm	kg/d	NA	NA	NA
9P. 4,4'-DDD (72-54-8)			x	ND	NA	NA	NA	NA	NA	1	ppm	kg/d	NA	NA	NA
10P. Dieldrin (60-57-1)			x	ND	NA	NA	NA	NA	NA	1	ppm	kg/d	NA	NA	NA
11P. α-Endosulfan (115-29-7)			x	ND	NA	NA	NA	NA	NA	1	ppm	kg/d	NA	NA	NA
12P. β-Endosulfan (115-29-7)			x	ND	NA	NA	NA	NA	NA	1	ppm	kg/d	NA	NA	NA
13P. Endosulfan Sulfate (1031-07-8)			x	ND	NA	NA	NA	NA	NA	1	ppm	kg/d	NA	NA	NA
14P. Endrin (72-20-8)			x	ND	NA	NA	NA	NA	NA	1	ppm	kg/d	NA	NA	NA
15P. Endrin Aldehyde (7421-93-4)			x	ND	NA	NA	NA	NA	NA	1	ppm	kg/d	NA	NA	NA
16P. Heptachlor (76-44-8)			x	ND	NA	NA	NA	NA	NA	1	ppm	kg/d	NA	NA	NA

CONTINUE ON PAGE V-9

NORTH ANNA POWER STATION

EPA I.D. NUMBER (copy from Item 1 of Form 1)	OUTFALL NUMBER
VAD065376279	112 (113)

Steam Generator Blowdown

CONTINUED FROM PAGE V-8

1. POLLUTANT AND CAS NUMBER (if available)	2. MARK 'X'			3. EFFLUENT							4. UNITS		5. INTAKE (optional)		
	a. TESTING REQUIRED	b. BELIEVED PRESENT	c. BELIEVED ABSENT	a. MAXIMUM DAILY VALUE		b. MAXIMUM 30 DAY VALUE (if available)		c. LONG TERM AVRG. VALUE (if available)		d. NO. OF ANALYSES	a. CONCENTRATION	b. MASS	a. LONG TERM AVERAGE VALUE		b. NO. OF ANALYSES
				(1) CONCENTRATION	(2) MASS	(1) CONCENTRATION	(2) MASS	(1) CONCENTRATION	(2) MASS				(1) CONCENTRATION	(2) MASS	
GC/MS FRACTION — PESTICIDES *(continued)*															
17P. Heptachlor Epoxide (1024-57-3)			x	ND	NA	NA	NA	NA	NA	1	ppm	kg/d	NA	NA	NA
18P. PCB-1242 (53469-21-9)			x	ND	NA	NA	NA	NA	NA	1	ppm	kg/d	NA	NA	NA
19P. PCB-1254 (11097-69-1)			x	ND	NA	NA	NA	NA	NA	1	ppm	kg/d	NA	NA	NA
20P. PCB-1221 (11104-28-2)			x	ND	NA	NA	NA	NA	NA	1	ppm	kg/d	NA	NA	NA
21P. PCB-1232 (11141-16-5)			x	ND	NA	NA	NA	NA	NA	1	ppm	kg/d	NA	NA	NA
22P. PCB-1248 (12672-29-6)			x	ND	NA	NA	NA	NA	NA	1	ppm	kg/d	NA	NA	NA
23P. PCB-1260 (11096-82-5)			x	ND	NA	NA	NA	NA	NA	1	ppm	kg/d	NA	NA	NA
24P. PCB-1016 (12674-11-2)			x	ND	NA	NA	NA	NA	NA	1	ppm	kg/d	NA	NA	NA
25P. Toxaphene (8001-35-2)			x	ND	NA	NA	NA	NA	NA	1	ppm	kg/d	NA	NA	NA

Addendum to EPA Form 3510-2C

Addendum to Form 3510-2C, Permit No. VA0052451
North Anna Power Station

1. All chemical data are from the 1999 DMR database or were collected during 1999 specifically for this application.

2. The conversion of concentration values (mg/d) to mass values (kg/d) was calculated with the standard equation:

   concentration (mg/L) x flow (MG/d) x 3.785 kg/mg/L/MG = mass (kg/d)

   See Attached table of calculations.

March 29,2000

North Anna Power Station VPDES Application - Permit No. VA0052451

Addendum To Form 2C

The conversion of concentration values (mg/d) to mass values (kg/d) was calculated with this standard equation:

concentration (mg/L) X flow (MG/d) X 3.785 kg/mg/L/MG = mass (kg/d)

	Enter from Form 2C		Constant	Enter on Form 2C
Outfall #	conc (mg/L) X	Long term ave flow (MG/d) X	Conversion factor 3.785 kg/mg/L/MG =	mass (kg/d)
001	3.2	2160	3.785	26161.9200
001	0.06	2160	3.785	490.5360
001	0.28	2160	3.785	2289.1680
001	0.039	2160	3.785	318.8484
001	0.15	2160	3.785	1226.3400
001	0.92	2160	3.785	7521.5520
001	0.02	2160	3.785	163.5120
001	5.53	2160	3.785	45211.0680
001	0.02	2160	3.785	163.5120
001	0.252	2160	3.785	2060.2512
001	0.03	2160	3.785	245.2680
001	0.02	2160	3.785	163.5120
001	0.27	2160	3.785	2207.4120
001	1.7	2160	3.785	13898.5200
001	0.162	2160	3.785	1324.4472
001	0.013	2160	3.785	106.2828
001	0.002	2160	3.785	16.3512
001	0.004	2160	3.785	32.7024
001	0.001	2216	3.785	8.3876
009	2.36	0.198	3.785	1.7687
009	4.2	0.198	3.785	3.1476
009	7.3	0.198	3.785	5.4708
009	5.5	0.198	3.785	4.1219
009	2.5	0.198	3.785	1.8736
009	0.05	0.198	3.785	0.0375
009	1.17	0.198	3.785	0.8768
009	0.8	0.198	3.785	0.5995
009	1	0.198	3.785	0.7494
009	0.07	0.198	3.785	0.0525
009	6.36	0.198	3.785	4.7664
009	0.048	0.198	3.785	0.0360
009	0.081	0.198	3.785	0.0607
009	0.03	0.198	3.785	0.0225
009	0.76	0.198	3.785	0.5696
009	4.49	0.198	3.785	3.3649
009	0.261	0.198	3.785	0.1956
009	0.002	0.198	3.785	0.0015
009	0.002	0.198	3.785	0.0015
009	0.23	0.198	3.785	0.1724
009				

Outfall #	Enter from Form 2C conc (mg/L) X	Long term ave flow (MG/d) X	Constant Conversion factor 3.785 kg/mg/L/MG =	Enter on Form 2C mass (kg/d)
019	6.3	0	3.785	0.0000
019	0.02	0	3.785	0.0000
019	0.27	0	3.785	0.0000
019	0.061	0	3.785	0.0000
019	0.08	0	3.785	0.0000
019	0.71	0	3.785	0.0000
019	0.03	0	3.785	0.0000
019	4.83	0	3.785	0.0000
019	0.03	0	3.785	0.0000
019	0.032	0	3.785	0.0000
019	0.029	0	3.785	0.0000
019	0.12	0	3.785	0.0000
019	5.85	0	3.785	0.0000
019	0.022	0	3.785	0.0000
019	0.066	0	3.785	0.0000
019	0.002	0	3.785	0.0000
019	0.05	0	3.785	0.0000
019	0.01	0	3.785	0.0000
020	6	0.3195	3.785	7.2558
020	7.2	0.3195	3.785	8.7070
020	3.4	0.3195	3.785	4.1116
020	1.95	0.3195	3.785	2.3581
020	0.86	0.3195	3.785	1.0400
020	0.04	0.3195	3.785	0.0484
020	0.59	0.3195	3.785	0.7135
020	1.1	0.3195	3.785	1.3302
020	0.58	0.3195	3.785	0.7014
020	0.22	0.3195	3.785	0.2660
020	0.05	0.3195	3.785	0.0605
020	0.39	0.3195	3.785	0.4716
020	1.06	0.3195	3.785	1.2819
020	0.03	0.3195	3.785	0.0363
020	10.05	0.3195	3.785	12.1535
020	0.071	0.3195	3.785	0.0859
020	0.058	0.3195	3.785	0.0701
020	0.04	0.3195	3.785	0.0484
020	0.09	0.3195	3.785	0.1088
020	4.9	0.3195	3.785	5.9256
020	0.007	0.3195	3.785	0.0085
020	0.005	0.3195	3.785	0.0060
020	0.0141	0.3195	3.785	0.0171
103	7.5	0.259	3.785	7.3524
103	5.08	0.259	3.785	4.9800
103	5.3	0.259	3.785	5.1957
103	4.3	0.259	3.785	4.2154
103	1.57	0.259	3.785	1.5391

	Enter from Form 2C		Constant	Enter on Form 2C
Outfall #	conc (mg/L) X	Long term ave flow (MG/d) X	Conversion factor 3.785 kg/mg/L/MG =	mass (kg/d)
103	0.9	0.259	3.785	0.8823
103	0.03	0.259	3.785	0.0294
103	6.73	0.259	3.785	6.5975
103	1.1	0.259	3.785	1.0783
103	6	0.259	3.785	5.8819
103	2.62	0.259	3.785	2.5684
103	0.148	0.259	3.785	0.1451
103	0.096	0.259	3.785	0.0941
103	0.021	0.259	3.785	0.0206
103	120	0.259	3.785	117.6378
103	0.0111	0.259	3.785	0.0109
103	0.136	0.259	3.785	0.1333
103	1.44	0.259	3.785	1.4117
103	0.6014	0.259	3.785	0.5896
103	0.0511	0.259	3.785	0.0501
103	0.0439	0.259	3.785	0.0430
103	0.0258	0.259	3.785	0.0253
103	0.0364	0.259	3.785	0.0357
103	0.0135	0.259	3.785	0.0132
103	0.00023	0.259	3.785	0.0002
103	0.0019	0.259	3.785	0.0019
103	0.0043	0.259	3.785	0.0042
103	0.0442	0.259	3.785	0.0433
103	0.0365	0.259	3.785	0.0358
103	0.0068	0.259	3.785	0.0067
103	0.0332	0.259	3.785	0.0325
103	0.005	0.259	3.785	0.0049
103	0.06	0.259	3.785	0.0588
103	0.02	0.259	3.785	0.0196
103	0.005	0.259	3.785	0.0049
103	0.05	0.259	3.785	0.0490
104(013,014)	16.92	0.264	3.785	16.9071
104(013,014)	44	0.264	3.785	43.9666
104(013,014)	24.8	0.264	3.785	24.7812
104(013,014)	18.2	0.264	3.785	18.1862
104(013,014)	12.2	0.264	3.785	12.1907
104(013,014)	6.4	0.264	3.785	6.3951
104(013,014)	37.48	0.264	3.785	37.4515
104(013,014)	8.08	0.264	3.785	8.0739
104(013,014)	0.218	0.264	3.785	0.2178
104(013,014)	3.29	0.264	3.785	3.2875
104(013,014)	41.56	0.264	3.785	41.5284
104(013,014)	17.1	0.264	3.785	17.0870
104(013,014)	11.05	0.264	3.785	11.0416
104(013,014)	6.2	0.264	3.785	6.1953
104(013,014)	1.39	0.264	3.785	1.3889
104(013,014)	5.94	0.264	3.785	5.9355

Outfall #	Enter from Form 2C conc (mg/L) X	Long term ave flow (MG/d) X	Constant Conversion factor 3.785 kg/mg/L/MG =	Enter on Form 2C mass (kg/d)
104(013,014)	19.47	0.264	3.785	19.4552
104(013,014)	0.072	0.264	3.785	0.0719
104(013,014)	0.04	0.264	3.785	0.0400
104(013,014)	0.82	0.264	3.785	0.8194
104(013,014)	5.3	0.264	3.785	5.2960
104(013,014)	0.525	0.264	3.785	0.5246
104(013,014)	0.097	0.264	3.785	0.0969
104(013,014)	0.034	0.264	3.785	0.0340
104(013,014)	0.008	0.264	3.785	0.0080
104(013,014)	0.0003	0.264	3.785	0.0003
104(013,014)	0.008	0.264	3.785	0.0080
104(013,014)	0.111	0.264	3.785	0.1109
104(013,014)	0.015	0.264	3.785	0.0150
104(013,014)	0.005	0.264	3.785	0.0050
104(013,014)	0.0002	0.264	3.785	0.0002
104(013,014)	0.556	0.264	3.785	0.5556
104(013,014)	0.84	0.264	3.785	0.8394
105	3.02	0.09	3.785	1.0288
105	40	0.09	3.785	13.6260
105	21.8	0.09	3.785	7.4262
105	0.09	0.09	3.785	0.0307
105	21	0.09	3.785	7.1537
105	0.19	0.09	3.785	0.0647
105	0.13	0.09	3.785	0.0443
105	0.611	0.09	3.785	0.2081
105	6.76	0.09	3.785	2.3028
105	4.7	0.09	3.785	1.6011
105	8.32	0.09	3.785	2.8342
105	98.81	0.09	3.785	33.6596
105	0.03	0.09	3.785	0.0102
105	0.9	0.09	3.785	0.3066
105	0.151	0.09	3.785	0.0514
105	0.17	0.09	3.785	0.0579
105	0.94	0.09	3.785	0.3202
105	14.14	0.09	3.785	4.8168
105	0.013	0.09	3.785	0.0044
105	0.214	0.09	3.785	0.0729
105	0.022	0.09	3.785	0.0075
105	0.008	0.09	3.785	0.0027
105	0.0004	0.09	3.785	0.0001
105	0.092	0.09	3.785	0.0313
105	0.004	0.09	3.785	0.0014
105	0.007	0.09	3.785	0.0024
105	0.928	0.09	3.785	0.3161
105	0.01	0.09	3.785	0.0034
108(114, 115)	3.430	0.025	3.785	0.3246

	Enter from Form 2C		Constant	Enter on Form 2C
Outfall #	conc (mg/L) X	Long term ave flow (MG/d) X	Conversion factor 3.785 kg/mg/L/MG =	mass (kg/d)
108(114, 115)	36	0.025	3.785	3.4065
108(114, 115)	18.1	0.025	3.785	1.7127
108(114, 115)	0.2	0.025	3.785	0.0189
108(114, 115)	61.1	0.025	3.785	5.7816
108(114, 115)	0.706	0.025	3.785	0.0668
108(114, 115)	0.17	0.025	3.785	0.0161
108(114, 115)	2.56	0.025	3.785	0.2422
108(114, 115)	0.3	0.025	3.785	0.0284
108(114, 115)	67.35	0.025	3.785	6.3730
108(114, 115)	0.061	0.025	3.785	0.0058
108(114, 115)	0.094	0.025	3.785	0.0089
108(114, 115)	2.1	0.025	3.785	0.1987
108(114, 115)	0.27	0.025	3.785	0.0255
108(114, 115)	19.12	0.025	3.785	1.8092
108(114, 115)	106.9	0.025	3.785	10.1154
108(114, 115)	0.192	0.025	3.785	0.0182
108(114, 115)	0.004	0.025	3.785	0.0004
108(114, 115)	0.001	0.025	3.785	0.0001
108(114, 115)	0.015	0.025	3.785	0.0014
108(114, 115)	0.22	0.025	3.785	0.0208
110(109)	1.3	0.032	3.785	0.1575
110(109)	0.2	0.032	3.785	0.0242
110(109)	0.2	0.032	3.785	0.0242
110(109)	0.1	0.032	3.785	0.0121
110(109)	2.41	0.032	3.785	0.2919
110(109)	0.06	0.032	3.785	0.0073
110(109)	1.81	0.032	3.785	0.2192
110(109)	0.01	0.032	3.785	0.0012
110(109)	0.028	0.032	3.785	0.0034
110(109)	0.12	0.032	3.785	0.0145
110(109)	0.04	0.032	3.785	0.0048
110(109)	0.001	0.032	3.785	0.0001
110(109)	0.009	0.032	3.785	0.0011
110(109)	0.0008	0.032	3.785	0.0001
110(109)	0.0003	0.032	3.785	0.00004
110(109)	0.003	0.032	3.785	0.0004
110(109)	0.003	0.032	3.785	0.0004
110(109)	0.002	0.032	3.785	0.0002
111	13	0.009	3.785	0.44
111	7.58	0.009	3.785	0.26
111	24.9	0.009	3.785	0.85
111	12.99	0.009	3.785	0.44
111	3	0.009	3.785	0.10
111	2.34	0.009	3.785	0.08
111	4.76	0.009	3.785	0.16

Outfall #	Enter from Form 2C conc (mg/L) X	Long term ave flow (MG/d) X	Constant Conversion factor 3.785 kg/mg/L/MG =	Enter on Form 2C mass (kg/d)
112(113)	7.74	0.206	3.785	6.0350
112(113)	4.9	0.206	3.785	3.8206
112(113)	3.3	0.206	3.785	2.5730
112(113)	3.3	0.206	3.785	2.5730
112(113)	1.02	0.206	3.785	0.7953
112(113)	0.46	0.206	3.785	0.3587
112(113)	0.32	0.206	3.785	0.2495
112(113)	0.122	0.206	3.785	0.0951
112(113)	1.6	0.206	3.785	1.2475
112(113)	0.01	0.206	3.785	0.0078
112(113)	0.02	0.206	3.785	0.0156
112(113)	0.46	0.206	3.785	0.3587
112(113)	0.004	0.206	3.785	0.0031
112(113)	0.48	0.206	3.785	0.3743
112(113)	0.029	0.206	3.785	0.0226
112(113)	0.018	0.206	3.785	0.0140
112(113)	0.002	0.206	3.785	0.0016
112(113)	0.03	0.206	3.785	0.0234

Virginia Power Detection Levels
For EPA Form 3510-2C Data

CENSORING POINT FOR FORM 2C DATA

FORM 2C Order	POLLUTANT	VIRGINIA POWER DETECTION LEVEL (ug/L)
	Biological Oxygen Demand (BOD)	2000
	Chemical Oxygen Demand	5000
	Total Organic Carbon	
	Total Suspended Solids	1000
1	Ammonia	10
2	Bromide	200
3	Chlorine (TRC)	
4	Fluoride	20
5	Nitrate-Nitrite	10
6	Nitrogen (Total Organic)	50
7	Oil & Grease	5000
8	Phosphorous	10
9	Sulfate	500
10	Sulfide	10
11	Sulfite	
12	Surfactants	25
13	Aluminum	200
14	Barium	3
15	Boron	20
16	Cobalt	3
17	Iron	50
18	Magnesium	10
19	Molybdenum	1
20	Mangaese	20
21	Tin	5
22	Titanium	10
23		
24	**METALS, CYANIDE, TOTAL PHENOLS**	
25	Antimony	2
26	Arsenic	3
27	Berylliyum	0.2
28	Cadmium	0.3
29	Chromium 3	1
30	Chromium 6	10
31	Copper	1

CENSORING POINT FOR FORM 2C DATA

FORM 2C Order	POLLUTANT	VIRGINIA POWER DETECTION LEVEL (ug/L)	DEQ QUANTITATION LEVEL (ug/L)
32	Lead	1	5
33	Mercury	0.2	0.3
34	Nickel	5	40
35	Selenium	3	5
36	Silver	0.1	2
37	Thallium	2	
38	Zinc	10	20
39	Cyanide	5	10
40	Phenols, Total	2.7	10
41			
42	**DIOXIN**	625 Screen	0.00001
43			
44	**VOLATILE COMPOUNDS**		
45	Acrolein	40.8	
46	Acrylonitrile	1.5	
47	Benzene	4.4	10
48	Bis (chloromethyl) ether	NA	NA
49	Bromoform	4.7	10
50	Carbon Tetrachloride	2.8	10
51	Chlorobenzene (monochlorobenzene)	6	50
52	Chlorodibromomethane	3.1	10
53	Chloroethane	1.1	
54	2-Chloroethylvinyl Ether	1.2	
55	Chloroform	1.6	10
56	Chloromethane (same as methy chloride)	1.1	
56	Methly Chloride (same as chloromethane)	1.1	
58	Dichlorobromomethane	2.2	10
59	Dichlorodifluoromethane	NA	NA
60	1,1-Dichloroethane	4.7	
61	1,2-Dichloroethane	2.8	
62	1,1,-Dichloroethylene	2.8	
63	1,2-Dichloropropane	6	
64	trans 1,3-Dichloropropylene	0.9	
64	cis 1,3-Dichloropropylene	5.9	
65	Ethylbenzene	7.2	10
66	Monochlorobenzene (Chlorobenzene)	6	
67	Methyl Bromide	1.4	
69	Dichloromethane (methylene chloride)	2.8	

^

CENSORING POINT FOR FORM 2C DATA

FORM 2C Order	POLLUTANT	VIRGINIA POWER DETECTION LEVEL (ug/L)	DEQ QUANTITATION LEVEL (ug/L)
69	Methylene Chloride (same as dichloromethan	2.8	
70	1,1,2,2-Tetrachloroethane	6.9	
71	Tetrachloroethylene	4.1	10
72	Toluene	6	10
73	1,2-TransDichloroethylene	1.6	
74	1,1,1-Trichloroethane	3.8	
75	1,1,2-Trichloroethane	5	
76	Trichloroethylene	1.9	10
77	Trichlorofluoromethane	NA	NA
78	Vinyl Chloride	1.8	10
79			
80	**ACID COMPOUNDS**		
81	2-Chlorophenol	3.3	
82	2,4-Dichlorophenol	5.6	
83	2,4-Dimethylphenol	5.2	
84	4,6-Dinitro-O-Cresol	24	
85	2,4-Dinitrophenol	42	
86	2-Nitrophenol	3.6	
87	4-Nitrophenol	2.4	
88	P-Chloro-M-Cresol	7.5	
89	Pentachlorophenol	3.6	50
90	Phenol	2.7	10
91	2,4,6-Trichlorophenol	2.7	10
92			
93	**BASE/NEUTRAL COMPOUNDS**		
94	Acenaphthene	3	
95	Acenaphtylene	3.5	
96	Anthrancene	1.9	10
97	Benzidine	63	
98	Benzo (a) Anthrancene	7.8	10
99	Benzo (a) Pyrene	2.5	10
100	Benzofluroanthene		
101	Benzo (ghi) Perylene	4.1	
102	Benzo (b) Fluoranthene	4.8	10
103	Benzo (k) Fluoranthene	2.5	10
104	Bis (2-Chloroethoxy) Methane	5.3	
105	Bis (2-Chloroethyl) Ether	5.7	
106	Bis (2-Chloroisopropyl) Ether	5.7	

^

CENSORING POINT FOR FORM 2C DATA

FORM 2C Order	POLLUTANT	VIRGINIA POWER DETECTION LEVEL (ug/L)	DEQ QUANTITATION LEVEL (ug/L)
107	Bis (2-Ethylhexyl) Phthalate	2.5	10
108	4-Bromophenyl Phenyl	3	
109	Butyl Benzyl Phthalate	2.5	
110	2-Chloronaphthalene	4.6	
111	4-Chlorophenyl Phenyl	4.2	
112	Chrysene	2.5	10
113	Dibenzo (a,h) Anthracene	2.5	20
114	1,2-Dichlorobenzene	4	10
115	1,3-Dichlorobenzene	3.1	10
116	1,4-Dichlorobenzene	4.4	10
117	3,3'-Dichlorobenzidine	16.5	
118	Diethyl Phthalate	7.4	
119	Dimethyl Phthalate	7.5	
120	Di-N-Butyl Phthalate	6.4	
121	2,4-Dinitrotoluene	5.7	10
122	2,6-Dinitrotoluene	3.4	
123	Di-N-Octyl Phthalate	2.5	
124	1,2-Diphenylhydrazine (as Azobenzene)	8.8	
125	Fluoranthene	2.2	10
126	Fluorene	2.2	10
127	Hexachlorobenzene	3.1	
128	Hexachlorobutadiene	1.8	
129	Hexachlorocyclopentadiene	20	
130	Hexachloroethane	2.4	
131	Indeno (1,2,3-cd) Pyrene	3.7	20
132	Isophorone	5.1	10
133	Naphthalene	3.8	10
134	Nitrobenzene	4.2	
135	N-Nitrosodimethylamine	6.2	
136	N-Nitrosodi-N-Propylamine	3.6	
137	N-Nitrosdiphenylamine	2.7	
138	Phenanthrene	5.4	
139	Pyrene	3.8	10
140	1,2,4-Trichlorobenzene	7.9	
141			
142	**PESTICIDES**		
143	Aldrin	1.9	0.05
144	Alpha-BHC	3.1	

^

CENSORING POINT FOR FORM 2C DATA

FORM 2C Order	POLLUTANT	VIRGINIA POWER DETECTION LEVEL (ug/L)	DEQ QUANTITATION LEVEL (ug/L)
145	Lindane (Beta-BHC) [hexachlorocyclohexane]	4.2	0.05
146	Gama-BHC	2.2	
147	Delta-BHC	5.2	
148	Chlordane	10	0.2
149	Chlorpyrifos	93-015	93-015
150	2,4-D	93-015	93-015
151	4,4'-DDT	5.1	0.1
152	4,4'-DDE	5.6	
153	4,4'-DDD	4.1	
154	Dieldrin	4.4	0.1
155	Demeton	93-015	93-015
156	Alpha-Endosulfan	61.7	0.1
157	Beta-Endosulfan	80.3	0.1
158	Endosulfan Sulfate	5.6	0.1
159	Endrin	5.6	0.1
160	Endrin Aldehyde	65	
161	Heptachlor	4.3	0.05
162	Heptachlor Epoxide	2.2	
163	Malathion	93-015	93-015
164	Methoxychlor	93-015	93-015
165	Mirex	93-015	93-015
166	Parathion	93-015	93-015
167	PCB-1242	50	1
168	PCB-1254	36	1
169	PCP-1221	30	1
170	PCB-1232	50	1
171	PCB-1248	50	1
172	PCB-1260	50	1
173	PCB-1016	50	1
174	Silvex (2,4,5-TP)	93-015	93-015
175	Toxaphene	50	5
176			
177			
178			
179			
180			
181			
182			

CENSORING POINT FOR FORM 2C DATA

FORM 2C Order	POLLUTANT	VIRGINIA POWER DETECTION LEVEL (ug/L)	DEQ QUANTITATION LEVEL (ug/L)
183	UNKNOWN		
184	DEQ REQUIRED ONLY (NON-FORM 2C)		
185	ORGANICS		
186	INORGANICS		

Routinely Used Chemicals
(to support EPA Form 3510-2C, Section V)

NORTH ANNA POWER STATION POTENTIAL POLLUTANTS TO SURFACE WATER

SYSTEM	RELEASE MECHANISM	RELEASE PATH	FREQUENCY AND AMOUNT	CHEMICAL	MAX. CONC.
Bearing Cooling Water	Vacuum Priming Pump Cooling Water	TB Sump	60 GPM total (one pump per unit at 30 GPM) Continual	Zinc Phosphate Calgon H-900 Calgon H-510 Calgon H-940 Bleach	1.0 ppm 25 ppm 1 ppm 28 ppm 2.5 ppm 7.0 ppm
	BC Pump Strainer Blowdown	Circulating Water	400 GPM for 3 min. intervals as requred		
	BC Line Draining During Maintenance	TB Sump	200,000 gals. Max. per unit		
	Continuous Blowdown	Circulating water	Continuous at a maximum of 200 gpm		
Service Water Cooling Water	SW Line Draining During Maintenance	Sump, Storm Drain and Circulation Water	150,000 Gal max	Calgon TRC-256 Calgon H-130 Calgon H-900 Calgon H-300 Calgon Poly-E-Z 7736	700 ppm 25 ppm 1 ppm 75 10 ppm
	Overflow	Circulating water when reservoir too full	Infrequent, Amount unknown		
	Continuous Blowdown	Circulating water	Continuous at a maximum of 500 gpm		
	Batch Blowdown	Circulating water or discharge canal	As needed to maintain cycles of concentration 9,000 gpm for a maximum release of 40,000,000		
Condenser Hotwell	Draining	Circulating water	200,000 gallons per Hotwell	ETA Hydrazine Ammonia	3.0 ppm 1.0 ppm 4 ppm
Steam Generator Wet Layup	Draining	Circulating water	43,000 gallons per Steam Generator	Hydrazine Ammonia ETA	500 ppm 4 gal of NH4OH per SG 20 ppm

March 30, 2000

POTENTIAL POLLUTANTS TO SURFACE WATER

The following is a list of chemicals either currently in use or likely to be evaluated for use within the next five years at North Anna Power Station. The list is subdivided into plant systems with brief comments included to give perspective.

I. Chemicals added (or potential for addition) to steam generators/secondary system (blowdown to the environment)

1. hydrazine	currently added to control oxygen
2. monoethanolamine (ETA)	added at NAPS to control pH
3. ammonium hydroxide	formed in the system by hydrazine decomposition (may be added to adjust pH)
4. carbohydrazide (N2H3)2CO	evaluating as a replacement for hydrazine
5. dimethylarnine (DMA)	will be evaluated this year for future addition (pH control)
6. methoxypropylamine (MPA)	may be evaluated for use w/in 5 yrs. (pH control)
7. 2-amino-2-methyl-l-propanol (AMP)	may be evaluated for use w/in 5 yrs. (pH control)
8. morpholine used in the recent past	may be used again? (pH control)
9. Pyrrolidine	may be evaluated for use w/in 5 yrs
10. 4-aminobutaol	may be evaluated for use w/in 5 yrs

II. Chemicals added to the service water reservoir

1. 33% sodium molybdate, 1% sodium borate	(Calgon's TRC-256)added as a corrosion inhibitor
2. 50% didecyl dimethyl ammonium chloride	(Calgon's H 130) added as a biocide
3. 45% glutaraldehyde	(Calgon's H 300) added as a biocide
5. 96% 1-bromo-5-chloro-5,5-dimethylhydantoin	(Calgon's H 901G) added as a biocide
6. organic polymer	(Calgon's PolyZ) seldom added, used to control silting In SW reservoir
7. Sodium Bromide	may be evaluated for use w/in 5 yrs
8. Sodium Hypochloride	may be evaluated for use w/in 5 yrs

III. Chemicals added to the auxiliary heating boiler (potential for blowdown to reach the environment during operation)

1. ammonium hydroxide	(already listed above)
2. hydrazine	(already listed above)

IV. Chemicals added to the bearing cooling system

1. organic and inorganic phosphates, tolytriazole	(Calgon's PCL-713) added as a corrosion inhibitor
2. 93.5% 1-bromo-3-chloro-5,5-dimethylhydantoin	(Calgon's H 900) added as a biocide
3. 1.1% 5-chloro-2-methyl-4-isothiazolin- 3-one; 0.4% 2-methyl 4-isothiazolin-3-one	(Calgon's H 510) added as a biocide
4. Sodium Bromide	
5. Sodium Hypochlorite	(Calgon H940)
6. Endothall, mono (,N-dimethylcocamine) salt	(Calgon EVAC molluscicide)

Bearing cooling chemical #2 is already listed above

V. Chemicals added to the component cooling system (not expected to reach the environment-but have in the past)

1. potassium hydroxide	(pH control-currently added)
2. potassium chromate	(corrosion inhibitor-currently added)
3. potassium dichromate	(corrosion inhibitor-currently added)

Material Safety Data Sheets

1010 2/88

MATERIAL SAFETY DATA SHEET

CALGON CORPORATION
P.O. Box 1346
Pittsburgh, PA 15230-1346

24 Hour Emergency Telephone - - (412) 777-8000

CALGON CORPORATION
SUBSIDIARY OF MERCK & CO., INC.

I. PRODUCT IDENTIFICATION

PRODUCT NAME: CL-707A

CHEMICAL DESCRIPTION: Zinc chloride solution

PRODUCT CLASS: Corrosion inhibitor

II. HAZARDOUS INGREDIENTS AND EXPOSURE LIMITS

Chemical Name	CAS No.	% by Weight	Oral LD50 (rat)	Dermal LD50 (rabbit)	ACGIH TLV OSHA PEL
Zinc chloride	7646-85-7	23	350 mg/kg	Not available	(fume) TWA 1 mg/m^3 STEL 2 mg/m^3

III. TYPICAL PHYSICAL PROPERTIES

BOILING POINT: > 212°F

VAPOR PRESSURE: Similar to water

VAPOR DENSITY (air=1): Similar to water

% VOLATILE BY WEIGHT: 77

APPEARANCE AND ODOR: Odorless amber liquid

SOLUBILITY IN WATER: Complete

SPECIFIC GRAVITY: 1.212 - 1.225

pH: < 1.0

IV. FIRE AND EXPLOSION HAZARD DATA

FLASH POINT: This product is not flammable or combustible.

EXTINGUISHING MEDIA: Use extinguishing media suitable for the surrounding fire.

SPECIAL FIREFIGHTING PROCEDURES: Exercise caution when fighting any chemical fire. A self-contained breathing apparatus and protective clothing are essential.

UNUSUAL FIRE AND EXPLOSION HAZARDS: May release zinc chloride and zinc oxide fumes and hydrogen chloride gas in a fire.

NFPA RATINGS: Health = 3 Flammability = 0 Reactivity = 0 Special Hazard = NONE

While this information and recommendations set forth herein are believed to be accurate as of the date hereof, CALGON CORPORATION MAKES NO WARRANTY WITH RESPECT HERETO AND DISCLAIMS ALL LIABILITY FROM RELIANCE THEREON.

V. REACTIVITY DATA

CHEMICAL STABILITY: Stable

HAZARDOUS POLYMERIZATION: Will not occur.

INCOMPATIBILITY: Strong bases.

HAZARDOUS DECOMPOSITION PRODUCTS: Hydrogen chloride, zinc oxide.

VI. HEALTH HAZARD DATA

PRIMARY ROUTES OF ENTRY: Eye and skin contact, ingestion, inhalation of mist or fume

TARGET ORGANS: Skin and eyes

MEDICAL CONDITIONS AGGRAVATED BY EXPOSURE: History of allergic dermatitis.

DANGER!
May cause severe eye and skin damage
May be harmful if swallowed.

EFFECTS OF OVEREXPOSURE:

ACUTE

EYE CONTACT: This product would be considered to be extremely dangerous to the eyes, possibly causing extreme pain, inflammation, and swelling, which may be followed by corneal ulceration.

SKIN CONTACT: This product may be corrosive to the skin and cause primary dermatitis and chemical burns. Zinc chloride may produce true sensitization of the skin in the form of eczematoid dermatitis.

INGESTION: Based on the oral LD50 of zinc chloride, this product would be regarded to be moderately toxic if swallowed. Ingestion of the product may cause irritating or corrosive effects in the esophagus and stomach with pain, nausea and vomiting.

INHALATION: As an aqueous solution, this product would not be expected to present an inhalation hazard unless mists or fumes are generated.

SUBCHRONIC, CHRONIC

No applicable information was found concerning any potential health effects resulting from subchronic or chronic exposure to the product.

CARCINOGENICITY:

NTP: No
IARC: No
OSHA: No

HMIS RATINGS: Health = 3 Flammability = 0 Reactivity = 0
Personal Protective Equipment = to be supplied by user depending on use conditions

VII. APPLICABLE CONTROL MEASURES

APPROPRIATE HYGIENIC PRACTICES: Do not get in eyes, on skin or clothing.
Avoid breathing mist or fume.

PERSONAL PROTECTIVE EQUIPMENT:

EYE PROTECTION: Chemical splash goggles

SKIN PROTECTION: Chemical resistant gloves, face shield and protective clothing

RESPIRATORY PROTECTION: None required under normal conditions.

WORK PRACTICES: Eye wash station and safety shower should be accessible in immediate area.

HANDLING AND STORAGE PRECAUTIONS: Use with adequate ventilation.
Wash thoroughly after handling.
Keep container closed when not in use.

VIII. FIRST AID

EYE CONTACT: In case of contact, immediately flush eyes with plenty of water for at least 15 minutes. Seek medical aid immediately.

SKIN CONTACT: In case of contact, immediately flush skin with plenty of water for at least 15 minutes while removing contaminated clothing and shoes. Seek medical aid immediately. Wash clothing before reuse.

INGESTION: If swallowed, do NOT induce vomiting. Give large quantities of water. Seek medical aid immediately. Never give anything by mouth to an unconscious person.

INHALATION: Not an expected route of overexposure.

IX. SPILL OR LEAK PROCEDURES/WASTE DISPOSAL

STEPS TO BE TAKEN IF MATERIAL IS RELEASED OR SPILLED: Wearing appropriate personal protective equipment, contain spill, collect onto inert absorbent and place into suitable container.

WASTE DISPOSAL: Dispose of in accordance with local, state and federal regulations.
Do not allow to contaminate sewers and waterways.

X. REGULATORY STATUS

TSCA STATUS: The ingredients of this product are listed on the Toxic Substances Control Act (TSCA) Chemical Substances Inventory.

RCRA STATUS: This product as sold would be considered a RCRA Hazardous Waste based on the characteristic of corrosivity. The EPA Hazardous Waste Number is D002.

CERCLA reportable quantity of EPA hazardous substances in product:
Chemical = Zinc chloride RQ = 1000

Notify EPA of product spills exceeding 4292 pounds.

X. REGULATORY STATUS (continued)

SARA TITLE III:

Section 302 Extremely Hazardous Substances: None

Section 311 and 312 Health and Physical Hazards:

Immediate	Delayed	Fire	Pressure	Reactivity
(yes)	(no)	(no)	(no)	(no)

Section 313 Toxic Chemicals:

Chemical = Zinc compounds CAS #7646-85-7 % by weight = 23

DOT CLASSIFICATION:

Hazard Class: Corrosive material

Proper shipping name: Zinc chloride solution

ID number: UN 1840

Label: Corrosive

PREPARED BY: P.J. Maloney

IMP-0623/5

1179 10/79

MATERIAL SAFETY DATA SHEET

DATE April 16, 1990

SD26-07-22-88-520

PRODUCT NAME PCL-713

CALGON CORPORATION
SUBSIDIARY OF MERCK & CO., INC.

SECTION I

MANUFACTURER'S NAME	Calgon Corporation	EMERGENCY TELEPHONE NO.	(412) 777-8000
ADDRESS	P.O. Box 1346, Pittsburgh, Pennsylvania 15230		
CHEMICAL NAME AND SYNONYMS	Anionic Polymer Solution	FORMULA	Multicomponent Liquid

SECTION II — HAZARDOUS INGREDIENTS

PRINCIPAL HAZARDOUS COMPONENT (S)	%	ORAL LD_{50}	DERMAL LD_{50}	TLV (Units)
This product would not be regarded to contain any				
hazardous ingredients according to OSHA Hazard				
Communication Standard (29 CFR 1910.1200).				

SECTION III — PHYSICAL DATA

BOILING POINT (°F)	> 212	SPECIFIC GRAVITY (H_2O=1)	1.18 - 1.22
VAPOR PRESSURE (mmHg.)	Similar to Water	PERCENT VOLATILE BY VOLUME (%)	~80
VAPOR DENSITY (AIR=1)	Similar to Water	pH	5.8 - 6.2
SOLUBILITY IN WATER	Complete		

APPEARANCE AND ODOR Clear colorless liquid

SECTION IV — FIRE AND EXPLOSION HAZARD DATA

FLASH POINT (Method Used)	Not Flammable	FLAMMABLE LIMITS	LEL	UEL
		Not Applicable		

EXTINGUISHING MEDIA Product is not flammable.

SPECIAL FIRE FIGHTING PROCEDURES Exercise caution when fighting any chemical fire. A self-contained breathing apparatus and protective clothing are essential.

UNUSUAL FIRE AND EXPLOSION HAZARDS None

While the information and recommendations set forth herein are believed to be accurate as of the date hereof, CALGON CORPORATION MAKES NO WARRANTY WITH RESPECT HERETO AND DISCLAIMS ALL LIABILITY FROM

N/A = Not applicable

SECTION V HEALTH HAZARD DATA

EFFECTS OF OVEREXPOSURE

On the basis of animal testing, we would not expect this product to produce any skin or eye irritation. Furthermore, results from acute toxicity testing show that the material would not be considered toxic as defined by the CPSC protocols.

EMERGENCY AND FIRST AID PROCEDURES

Good First Aid should be followed in all cases of exposure.

In case of eye contact, flush with plenty of water for at least 15 minutes.
If irritation develops, call a physician.

SECTION VI REACTIVITY DATA

STABILITY	STABLE	X	CONDITIONS TO AVOID	Unknown
	UNSTABLE			

INCOMPATABILITY (Materials to Avoid) Strong oxidizers

HAZARDOUS DECOMPOSITION PRODUCTS Unknown

HAZARDOUS POLYMERIZATION			CONDITIONS TO AVOID	Unknown
MAY OCCUR		NO	X	

SECTION VII SPILL OR LEAK PROCEDURES

REPORTABLE QUANTITIES (RQ) IN LBS. OF EPA HAZARDOUS SUBSTANCES IN PRODUCT

1. N/A
2.
3.

NOTIFY EPA OF PRODUCT SPILLS EQUAL TO OR EXCEEDING N/A LBS.

STEPS TO BE TAKEN IN CASE MATERIAL IS RELEASED OR SPILLED

Dispose of in accordance with local, state and federal regulations. Dike area to contain as much spilled material as possible. Remove any remaining material by absorbing on vermiculite or other suitable absorbing material and place in a sealed metal container for disposal. Hose spill area well since product can make floors slippery.

WASTE DISPOSAL METHOD

Flush product waste with plenty of water and dispose of in accordance with local, state and federal regulations.

SECTION VIII SPECIAL PROTECTION INFORMATION

RESPIRATORY PROTECTION (Specify Type) Not Required

VENTILATION			
Normal	LOCAL EXHAUST	Not Required	SPECIAL
	MECHANICAL (General)	Not Required	OTHER

PROTECTIVE GLOVES	Not Required	EYE PROTECTION	Not Required

OTHER PROTECTIVE EQUIPMENT Not Required

SECTION IX SPECIAL PRECAUTIONS

PRECAUTIONS TO BE TAKEN IN HANDLING AND STORING

Wash thoroughly after handling. Keep container closed.
Exercise caution in the storage and handling of all chemical substances.

OTHER PRECAUTIONS

None

DATE PREPARED BY Janet Mostowy

Outfall 001 Toxicity Data Summary (to support EPA Form 3510-2C, Section VII)

Coastal Bioanalysts, Inc.

III. OUTFALL DATA SUMMARY

Table 5. Cumulative Data Summary - Acute & Chronic Tests
(Tests conducted on this outfall by CBI)

	Invertebrate				Vertebrate			
	Acute Tests		Chronic Tests		Acute Tests		Chronic Tests	
Test Date	LC50	T.U.	NOEC	T.U.	LC50	T.U.	NOEC	T.U.
9/90	>100%	<1.00	30%	3.33	>100%	<1.00	100%	≤1.00
2/91	>100%	<1.00	100%	≤1.00	N/A	N/A	100%	≤1.00
10/91	>100%	<1.00	100%	≤1.00	N/A	N/A	N/A	N/A
11/92	>100%	<1.00	100%	≤1.00	N/A	N/A	N/A	N/A
11/93	>100%	<1.00	100%	≤1.00	N/A	N/A	N/A	N/A
10/94	>100%	<1.00	100%	≤1.00	N/A	N/A	N/A	N/A
11/95	N/A	N/A	100%	≤1.00	N/A	N/A	N/A	N/A
12/95	>100%	<1.00	N/A	N/A	N/A	N/A	N/A	N/A
11/96	>100%	<1.00	100%	≤1.00	N/A	N/A	N/A	N/A
11/97	>100%	<1.00	100%	≤1.00	N/A	N/A	N/A	N/A
11/98	>100%	<1.00	100%	≤1.00	N/A	N/A	N/A	N/A
11/99*	>100%	<1.00	100%	≤1.00	N/A	N/A	N/A	N/A

*Results submitted with this report

EPA Form 3510-2E

Please type or print in the unshaded areas only	EPA ID Number *(copy from item 1 of Form 1)* VAD065376279	Form Approved. OMB No. 2040-0086 Approval expires 5-31-92.

Form **2E** NPDES

EPA Facilities Which Do Not Discharge Process Wastewater

I. Receiving Waters

For this outfall, list the latitude and longitude, and name of the receiving water(s).

Outfall Number *(list)*	Latitude			Longitude			Receiving Water *(name)*
	Deg	Min	Sec	Deg	Min	Sec	
111	38	03	47	77	47	56	Discharge Canal

II. Discharge Date *(If a new discharger, the date you expect to begin discharging)*

NA

III. Type of Waste

A. Check the box(es) indicating the general type(s) of wastes discharged.

- [x] Sanitary Wastes
- [ ] Restaurant or Cafeteria Wastes
- [ ] Noncontact Cooling Water
- [ ] Other Nonprocess Wastewater *(Identify)*

B. If any cooling water additives are used, list them here. Briefly describe their composition if this information is available.

None

IV. Effluent Characteristics

A. Existing Sources — Provide measurements for the parameters listed in the left-hand column below, unless waived by the permitting authority *(see instructions)*.

B. New Dischargers — Provide estimates for the parameters listed in the left-hand column below, unless waived by the permitting authority. Instead of the number of measurements taken, provide the source of estimated values *(see instructions)*.

Pollutant or Parameter	(1) Maximum Daily Value *(include units)*		(2) Average Daily Value *(last year)* *(include units)*		(3) (or) Number of Measurements Taken *(last year)*	(4) Source of Estimate *(if new discharger)*
	Mass	Concentration	Mass	Concentration		
Biochemical Oxygen Demand (BOD)	** 0.44 kg/d	13 ppm	** 0.26 kg/d	7.58 ppm	12	NA
Total Suspended Solids (TSS)	0.85 kg/d	24.9 ppm	0.44 kg/d	12.99 ppm	12	NA
Fecal Coliform *(if believed present or if sanitary waste is discharged)*	NA	<2 MPN / 100 ml	NA	NA	1	NA
Total Residual Chlorine *(if chlorine is used)*	0.10 kg/d	3 ppm	0.08 kg/d	2.34 ppm	12	NA
Oil and Grease	NA	<5.00 ppm	NA	NA	1	NA
*Chemical oxygen demand (COD)	Not required	Not required	Not required	Not required	Not required	NA
*Total organic carbon (TOC)	Not required	Not required	Not required	Not required	Not required	NA
Ammonia *(as N)*	0.16 kg/d	4.76 ppm	0.16 kg/d	4.76 ppm	1	NA
Discharge Flow	Value 0.016 mgd (1999 DMRs		0.009 mgd (1999 DMRs		12	NA
pH *(give range)*	Value 6.5 - 7.27		6.9		12	NA
Temperature *(Winter)*	NA °C		NA °C		NA	NA
Temperature *(Summer)*	2.44 °C		NA °C		1	NA

*If noncontact cooling water is discharged

**Average daily flow (1999) was used to calculate all mass values.

V. Except for leaks or spills, will the discharge described in this form be intermittent or seasonal? If yes, briefly describe the frequency of flow and duration. ☐ Yes ☒ No

VI. Treatment System *(Describe briefly any treatment system(s) used or to be used)*

See attachment "Treatment System Component Description"

VII. Other Information *(Optional)*

Use the space below to expand upon any of the above questions or to bring to the attention of the reviewer any other information you feel should be considered in establishing permit limitations. Attach additional sheets, if necessary.

NA

VIII. Certification

I certify under penalty of law that this document and all attachments were prepared under my direction or supervision in accordance with a system designed to assure that qualified personnel properly gather and evaluate the information submitted. Based on my inquiry of the person or persons who manage the system, or those persons directly responsible for gathering the information, the information submitted is to the best of my knowledge and belief, true, accurate, and complete. I am aware that there are significant penalties for submitting false information, including the possibility of fine and imprisonment for knowing violations.

A. Name & Official Title	B. Phone No. *(area code & no.)*
W.R. MATTHEWS, VICE PRESIDENT - STATION MANAGER	540-894-2101
C. Signature	D. Date Signed
WR Matthews	3/30/00

Treatment System Component Description
(to support EPA Form 3510-2E, Section VI)

II. TREATMENT SYSTEM COMPONENT DESCRIPTION

II. TREATMENT SYSTEM COMPONENT DESCRIPTION

A. Influent Pump Stations

There are currently 14 influent pump stations which collect and pump wastewater to other pump stations or to the influent sanitary piping. Table 1 on the following page lists the pumps station capacities, the buildings/areas served by each station, and the discharge locations.

Figure 3 shows the locations of all the influent pump stations.

The influent pump stations consist of duplex grinder pump systems in lead/lag operation with audible high water alarms. Two of the stations, PS No. 7 (SGRP) and PS No. 8 (SCOBN) are provided with 1000 gallon overflow tanks.

B. Sanitary Piping

The wastewater from the influent stations is collected in a series of gravity sanitary piping and manholes which convey the wastewater to the plant. The wastewater enters the plant from a manhole prior to the equalization tanks.

C. Equalization Tank

The equalization tank is divided into two main equalization chambers with a comminutor/bar screen chamber provided at the inlet of the tank. **Figures 4, 5,** and **6** show the basic components of the tank.

1. <u>Comminutor/Bar Screen Chamber</u>

The comminutor/bar screen chamber within the equalization tank provides for preliminary treatment of the wastewater and includes a comminutor and a bar screen. The comminutor is used during normal operation. Slide gates allow the influent to be diverted to the bar screen when the comminutor is not in operation.

A Pollution Control, Inc. Model P-8X-C comminutor with a ½ HP, 480 Volt, 3 Phase motor is provided.

The bar screen must be manually cleaned.

Table 1: Influent Pump Stations

Pump Station No.	Capacity	Buildings/Areas Served	Discharge Location
1	90 GPM	Building No. 58; Warehouse No. 5 Warehouse No. 6	Influent Sewer
2	120 GPM	Administration Annex South	Influent Sewer
3	120 GPM	Records and Security	Influent Sewer
4	90 GPM	Snubber Shop	Influent Sewer
5	200 GPM	Turbine Building; Administration and Engineering; TSC; Electric Shop	Influent Sewer
6	200 GPM	Chemical Pump Room; PDA; Chemistry Lab	Influent Sewer
7	200 GPM	SGRP Building	Influent Sewer
8	200 GPM	SCOBN Building; FFD Building; Cafeteria; Pipe Shop; Building 14	PS No. 7
9	170 GPM	Vehicle Maintenance Building; Paint Shop	PS No. 8
10	200 GPM	Training Building; Island Bathrooms	Influent Sewer
11	90 GPM	West End Security Building	PS No. 7
12	170 GPM	Maintenance Building	Influent Sewer
13	90 GPM	Security Block House	PS No.12
14	120 GPM	Administration Annex North	Influent Sewer

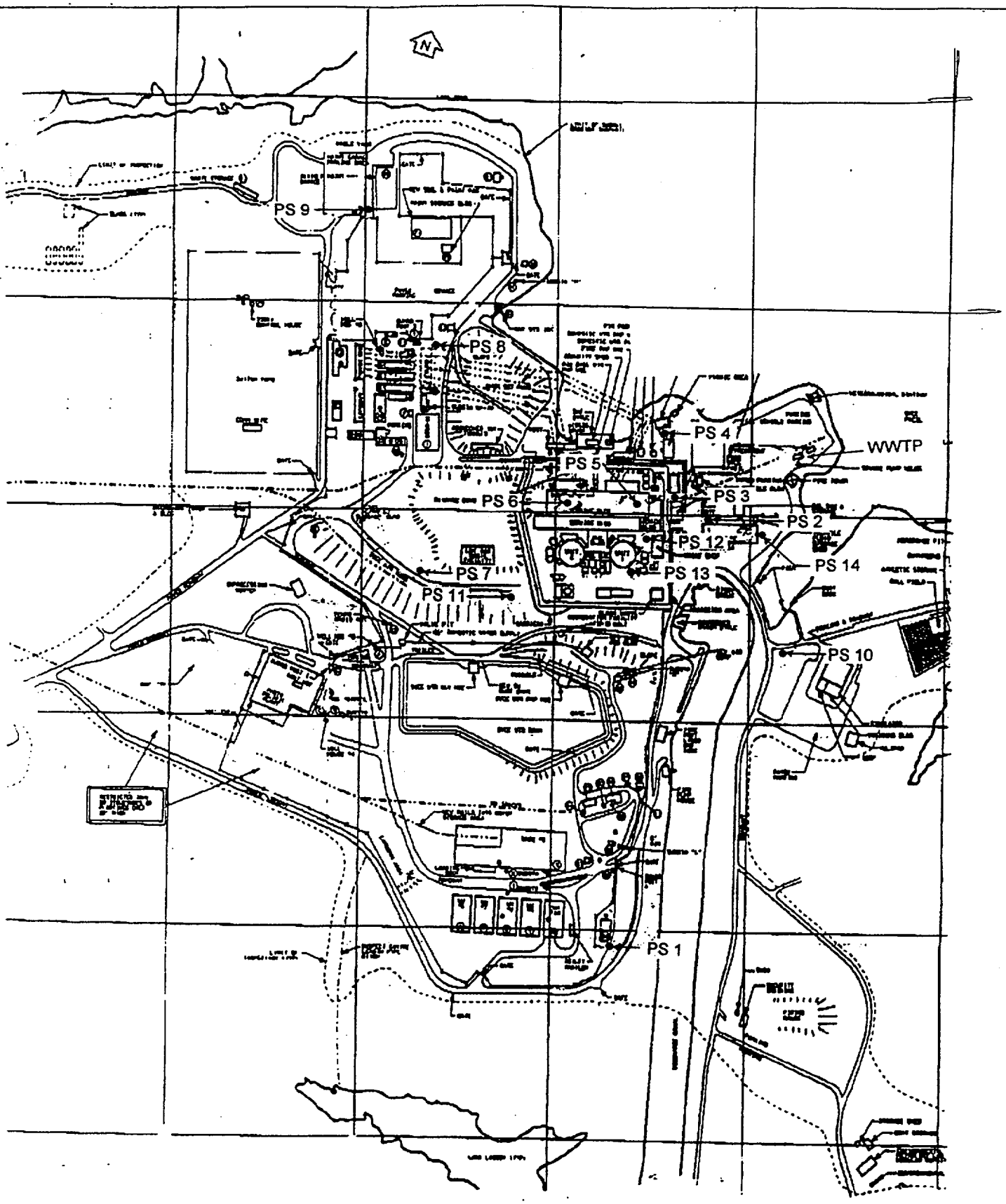

Influent Pump Station Locations

Figure 3

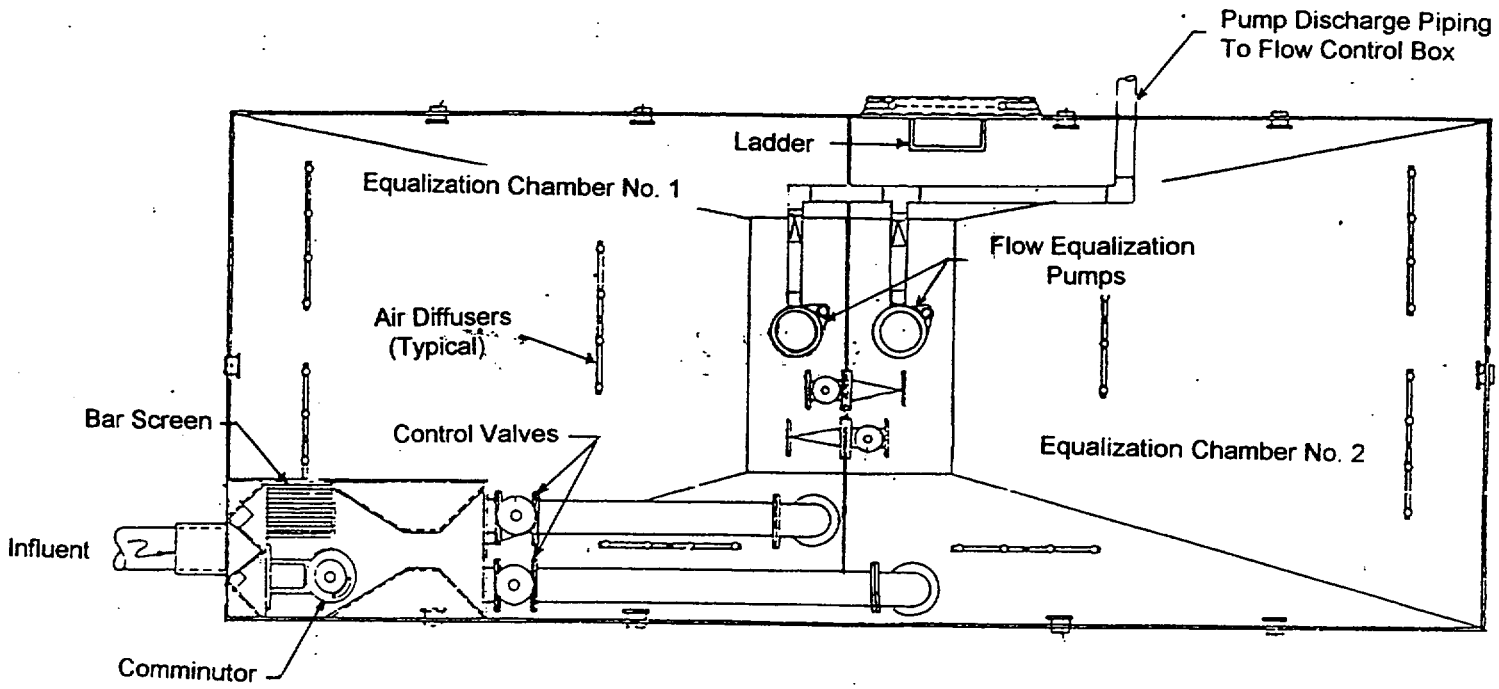

FLOW EQUALIZATION TANK PLAN

FIGURE 4

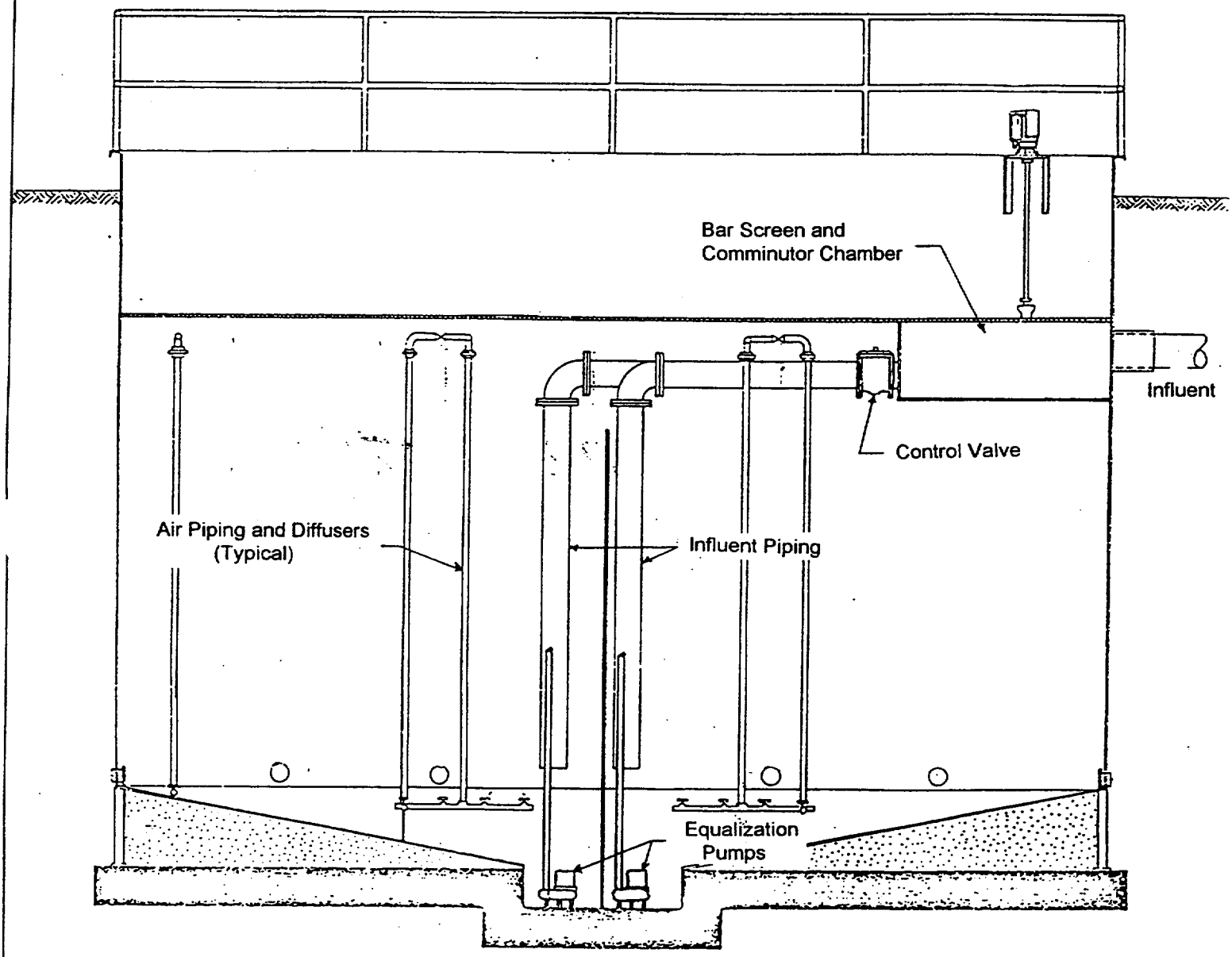

FLOW EQUALIZATION TANK SECTION

FIGURE 5

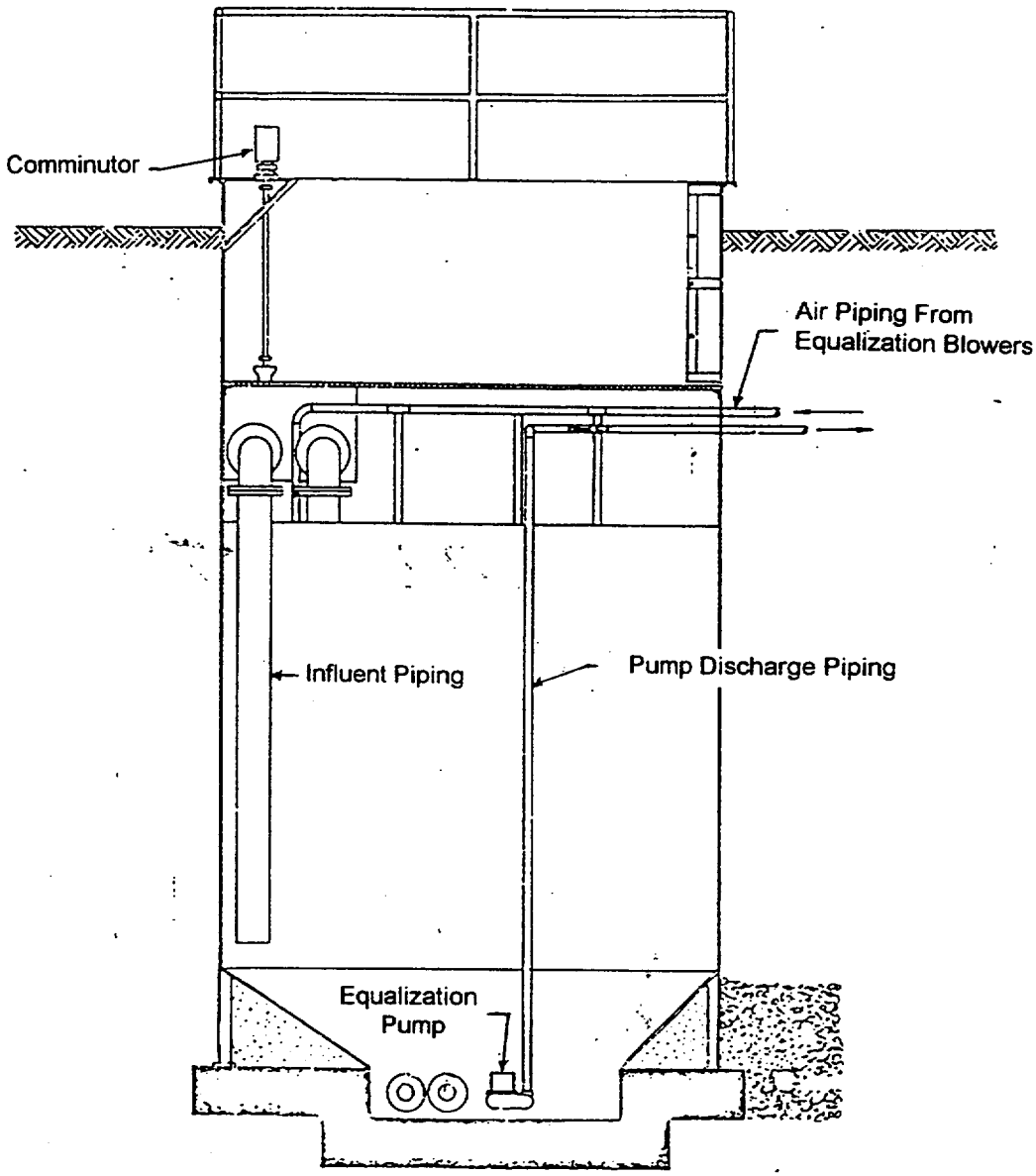

FLOW EQUALIZATION TANK SECTION

FIGURE 6

2. Equalization Chambers

Each equalization chamber holds approximately 18,700 Gallons, providing for approximately 4 hours of detention time at the design flow. An aeration system is provided to prevent septic conditions and two (2) equalization pumps are provided to transfer the wastewater to the main process tank.

a. Aeration System

Two (2) Roots AF-33 positive displacement blowers with 3 HP, 480 Volt, 3 Phase motors are provided in the equipment building for the equalization tank aeration system. Each blower is designed to deliver 32 SCFM at 6 PSID.

The aeration system also includes air piping, aeration headers, and diffusers. Each diffuser header is provided with its own air control valve.

The operation of the blowers is controlled by mercury level switches. Under normal operation, one blower operates and the other blower is for standby. A manual alternator is provided to switch the blowers between primary and standby. If the primary blower is called on to run and does not operate, the standby blower will come on line and an alarm will be annunciated.

b. Equalization Pumps

Two Hydromatic Model SPGL-200M-4 grinder pumps with 3 HP, 460 Volt, 3 Phase motors are provided.

The operation of the equalization pumps is controlled by mercury float switches. Under normal operation, one pump operates and the other pump is for standby. An alternator is provided to switch the pumps between primary and standby each time they operate. If the primary pump is called on to run and does not operate, the standby pump will come on line and an alarm is annunciated.

D. Flow Control and Flow Splitter Boxes

1. Flow Control Box

The discharge from the equalization tank pumps flows to a flow control box which controls the flow to the splitter box and aeration/sludge holding/settling tanks. A return flow flume is adjusted to return excess flows to the equalization tank and an adjustable orifice plate provides more accurate control of the flow to the main process tanks. **Figure 7** shows the components of the box.

2. Flow Splitter Box

The discharge from the flow control box flows to a splitter box which divides the flow equally between the two aeration/sludge holding/settling tanks. The flow is divided though a tee, and a pipe plug is provided to plug either side of the tee if the entire flow needs to be diverted to one aeration tank or the other.

E. Aeration/Sludge Holding/Settling Tanks

The aeration/sludge holding/settling tanks are the main process tanks and are divided into three main chambers. **Figures 8** and **9** show the components of the tanks.

1. Aeration Chamber

Each aeration/sludge holding/settling tank has an aeration chamber which holds approximately 15,000 Gallons, providing for approximately 24 hours of detention time overall. An aeration system and a froth control spray system are also provided.

a. Aeration System

Two (2) Sutorbilt 5MB positive displacement blowers with 7.5 HP, 480 Volt, 3 Phase motors are provided in the equipment building for the aeration chamber aeration system. Each blower is designed to deliver 210 SCFM at 5 PSID.

The aeration system also includes air piping, aeration headers, and diffusers. Each diffuser header is provided

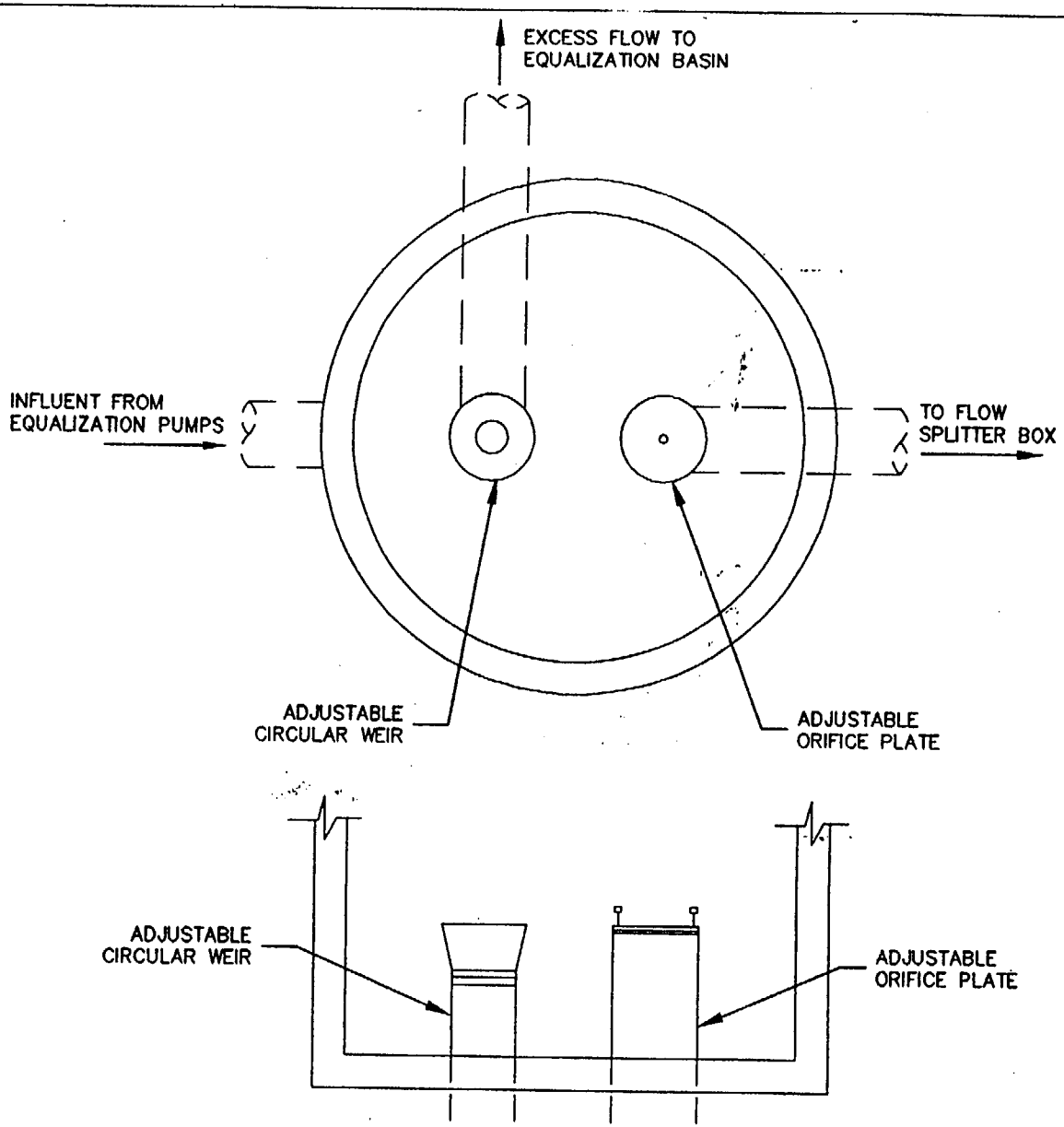

FLOW CONTROL BOX PLAN
AND SECTION

FIGURE 7

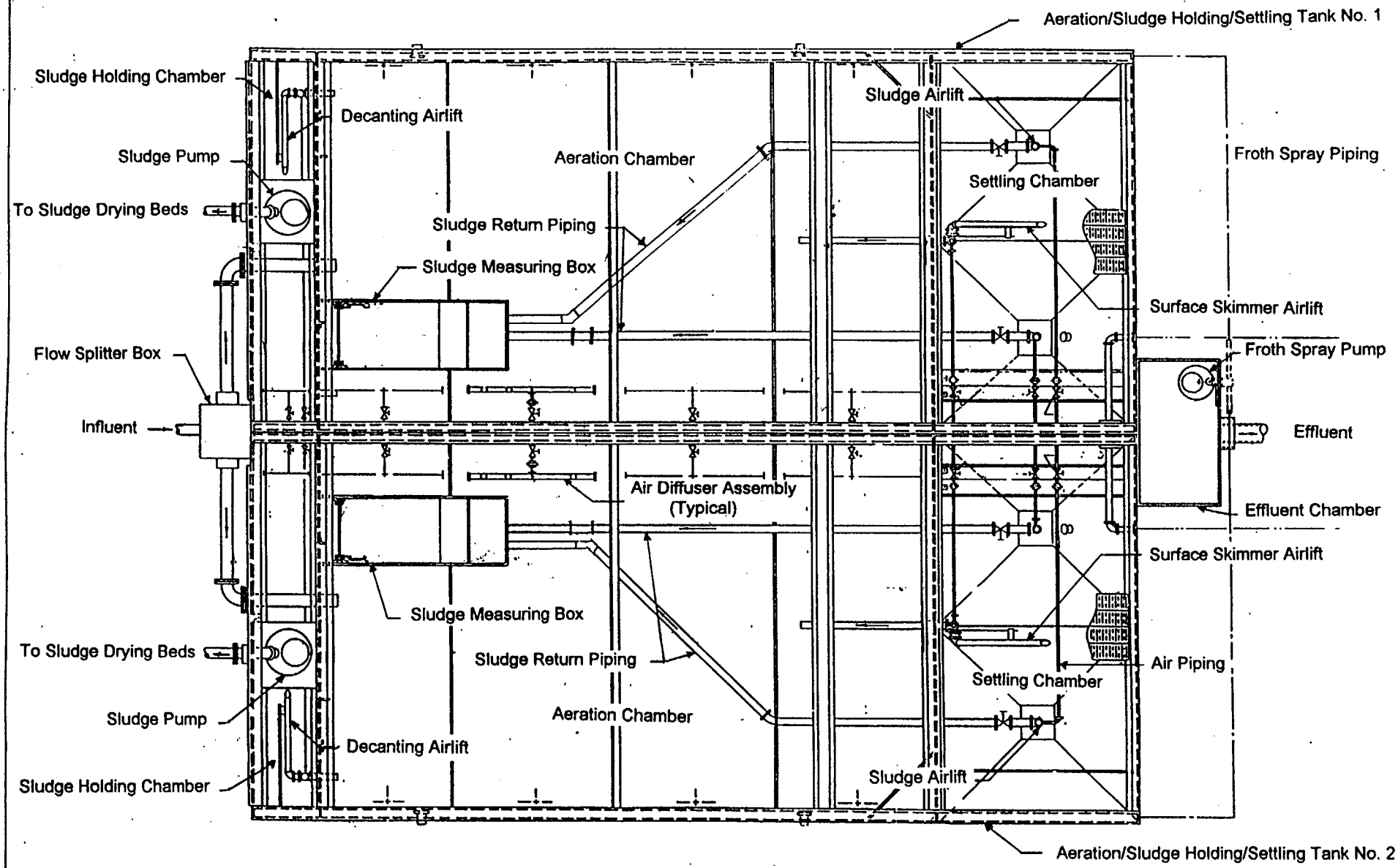

AERATION/SLUDGE HOLDING/SETTLING TANKS PLAN

FIGURE 8

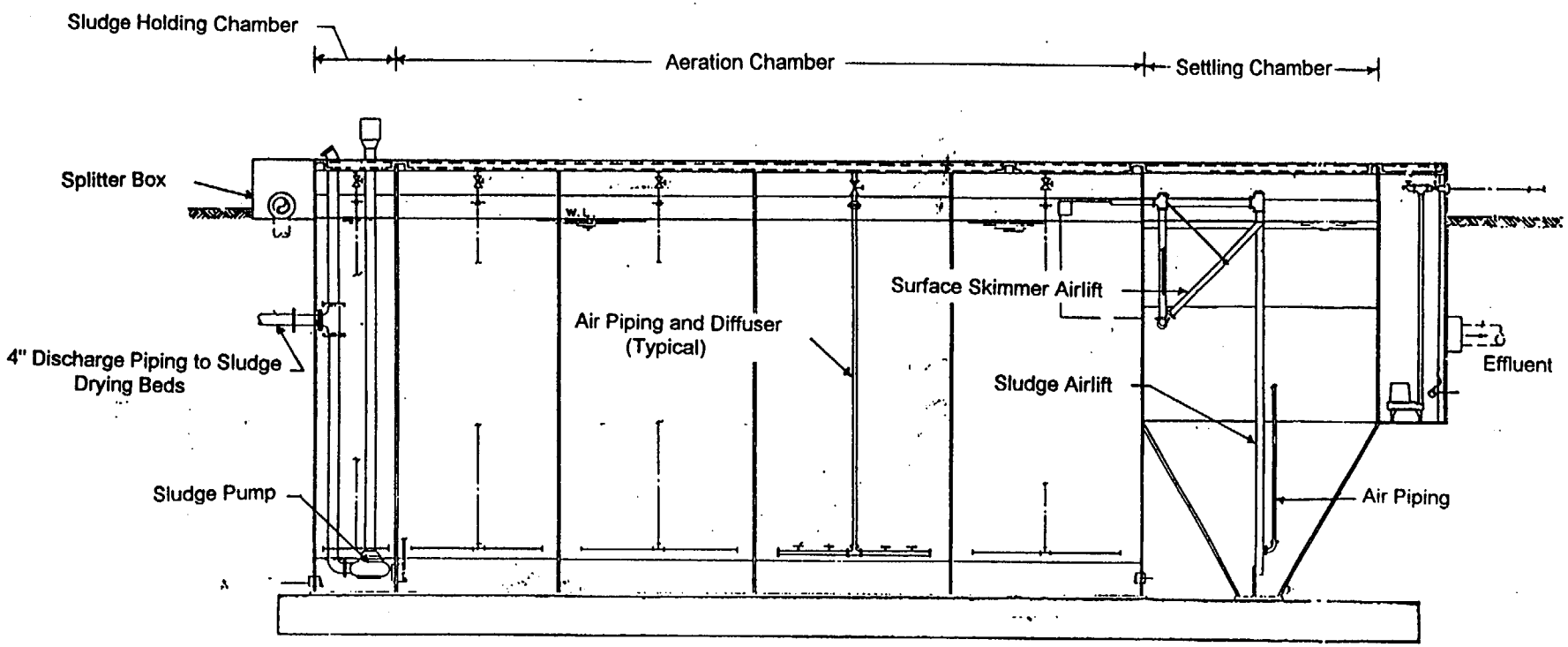

AERATION/SLUDGE HOLDING/SETTLING TANK SECTION

FIGURE 9

with its own air control valve.

The operation of the blowers is controlled by a 24 hour timer which can be set to operate the blowers in 15 minute increments. A percentage timing device in the controls allow the cycle to be adjusted based on a percentage of every hour. Under normal operation, one blower operates and the other blower is for standby. A manual alternator is provided to switch the blowers between primary and standby. If the primary blower is called on to run and does not operate, the standby blower will come on line and an alarm will be annunciated.

b. Froth Control Spray System

The froth control spray system consists of eight spray nozzles evenly spaced and attached to piping headers along the exterior wall of each aeration chamber.

A Tait, Inc., Model WH5-43-2 submersible pump with a ½ HP, 460V, 3-Phase motor is provided in the effluent tank to supply non-potable water for the spray system.

2. Settling Chamber

Each aeration/sludge holding/settling tank has a settling chamber which provides for 4 hours of detention time based on 24 hours of runoff daily. The maximum allowable surface settling rate is 300 GPD per square foot which is also based on a 24 hour daily runoff. A sludge lift system and a surface skimming device are also provided.

a. Sludge Lift System

Two (2) three inch diameter air lift pipes are provided to remove sludge from the settling chambers and return it to the aeration chambers or waste it to the sludge holding chambers.

Valves are provided for adjusting the air flow to the lift system and adjustable slide gates allow for adjusting the sludge wasting rate.

The blowers supplying air to the aeration chamber aeration system also supply air to the air lift system.

b. Surface Skimming System

A decanting air lift system is provided to remove surface scum from the water surfaces in the settling tanks. The system includes adjustable, swivel-jointed inlet pipes and notched adjustable inlet height rods.

The blowers providing air to the aeration chamber aeration system also provide the air for the surface skimming system.

3. Sludge Holding Chamber

Each aeration/sludge holding/settling tank also has a sludge holding chamber which holds approximately 2,100 Gallons each. Sludge pumps and decanting air lifts are also provided.

a. Sludge Pumps

Two sludge pumps are provided to pump excess sludge to the drying beds or into a truck for disposal off site.

The pumps are Clow/Yeomans Model 5-3 (8000 Series) submersible pumps with ½ HP, 460V, 3 Phase motors. The pumps are designed to pump 50 GPM at 11 feet TDH.

b. Decanting Air Lift System

A decanting air lift system is provided in the sludge holding chamber to draw off the supernatant. The system includes adjustable, swivel-jointed inlet pipes and notched adjustable inlet height rods.

The blowers providing air to the aeration chambers also provide the air for the decanting air lift system.

F. Sludge Drying Beds

Three drying beds are provided to dewater and reduce the volume to the waste sludge before its final disposal. The beds are 15' x 15' and have 12" of coarse filter media over approximately 6" of gravel. **Figure 10**

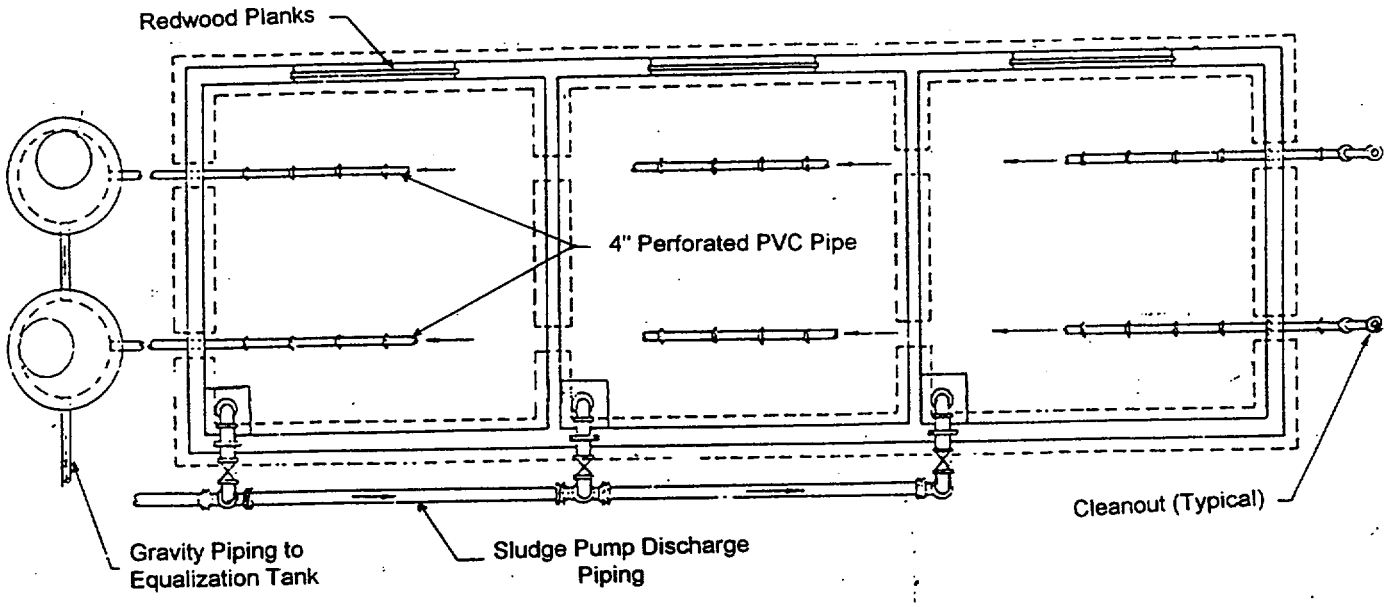

SLUDGE DRYING BEDS PLAN

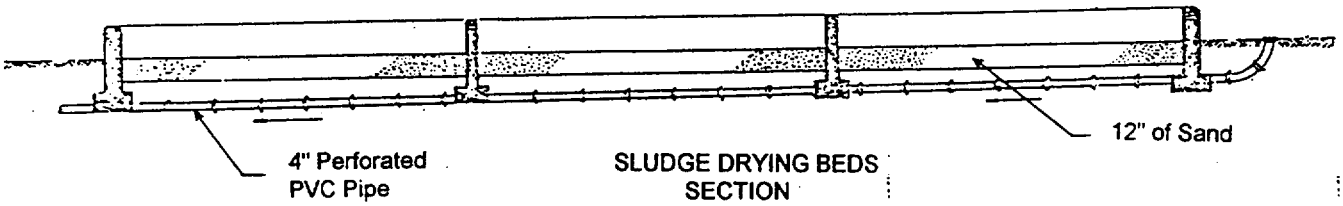

SLUDGE DRYING BEDS SECTION

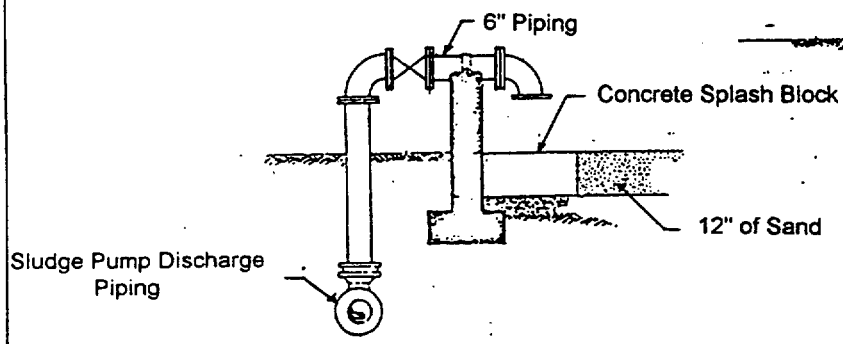

SLUDGE DRYING BED PIPING DETAIL

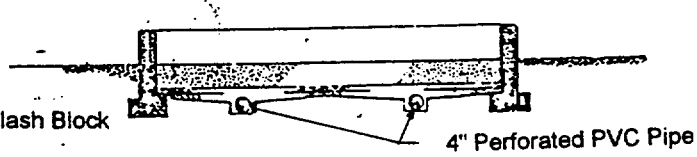

SLUDGE DRYING BEDS SECTION

FIGURE 10

shows the components of the drying beds.

The underdrain system consists of 4" perforated PVC pipe which changes to 4" CI pipe outside the beds. The bed drainage is directed to manholes for recirculation to the equalization tanks.

G. Chlorination/Dechlorination/Post Aeration Tank

The chlorination/dechlorination/post aeration tank includes a flow splitting chamber with adjustable weirs, two (2) chlorine contact chambers with chlorination tablet feeders at the inlets, and a dechlorination/post aeration chamber with mounting brackets for dechlorination tablet feeders to be installed at the inlets at a later date if required . Provisions are also included to install an aeration system for post aeration if required in the future. The wastewater flows through a stilling well with an ultrasonic flow meter prior to being discharged. **Figures 11** and **12** show the componants of the tank.

1. Chlorination Chambers

The chlorine contact chambers are 8' long x 4' wide with a water depth of 3'. The chambers are designed for a 69 minute contact time based on the design flow and have the required length/width ratio of 20:1 and a width/depth ratio of approximately 1.0 (1.33). Tablet feeders with chlorination tablets are provided at the inlets to the chambers to obtain the desired chlorine concentration.

a. Tablet Feeders

The tablet feeders are Eltech Model 1000 tablet feeders capable of treating approximately 50,000 GPD each. Sanuril calcium hypochlorite tablets are used to provide the required chlorine concentration.

2. Dechlorination/Post Aeration Chamber

The dechlorination/post aeration chamber is 4'-3" long x 8' wide with a water depth of 2'-8". Tablet feeder mounting brackets are provided on the inlets to the chamber to allow for the installation of dechlorination facilities at a later date if required and provisions for a post aeration system are also present. A flow meter is provided in a stilling well prior to discharge and a 30 Degree V-notch weir is provided for alternate flow measurement.

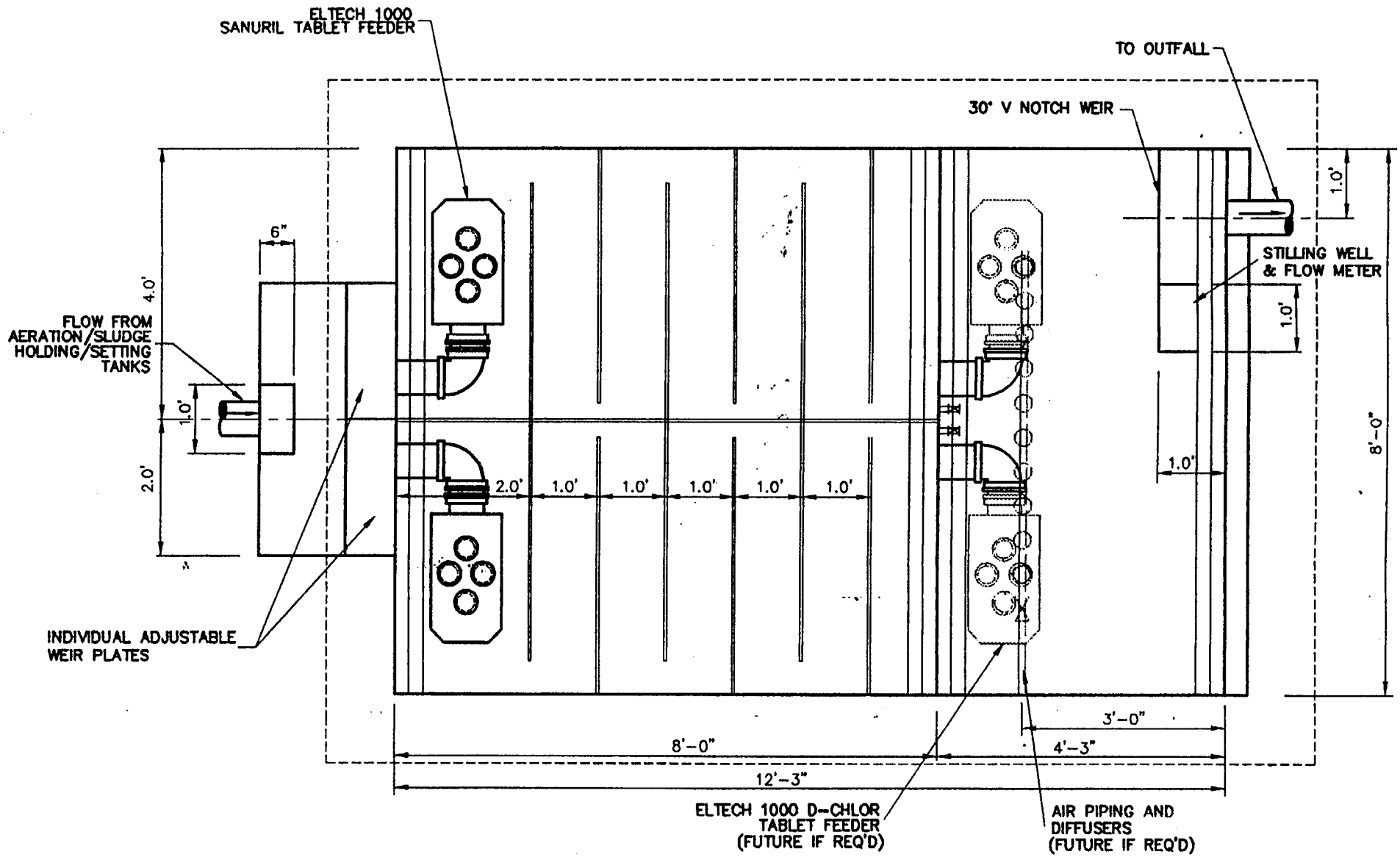

CHLORINATION/DECHLORINATION/POST AERATION TANK
PLAN

FIGURE 11

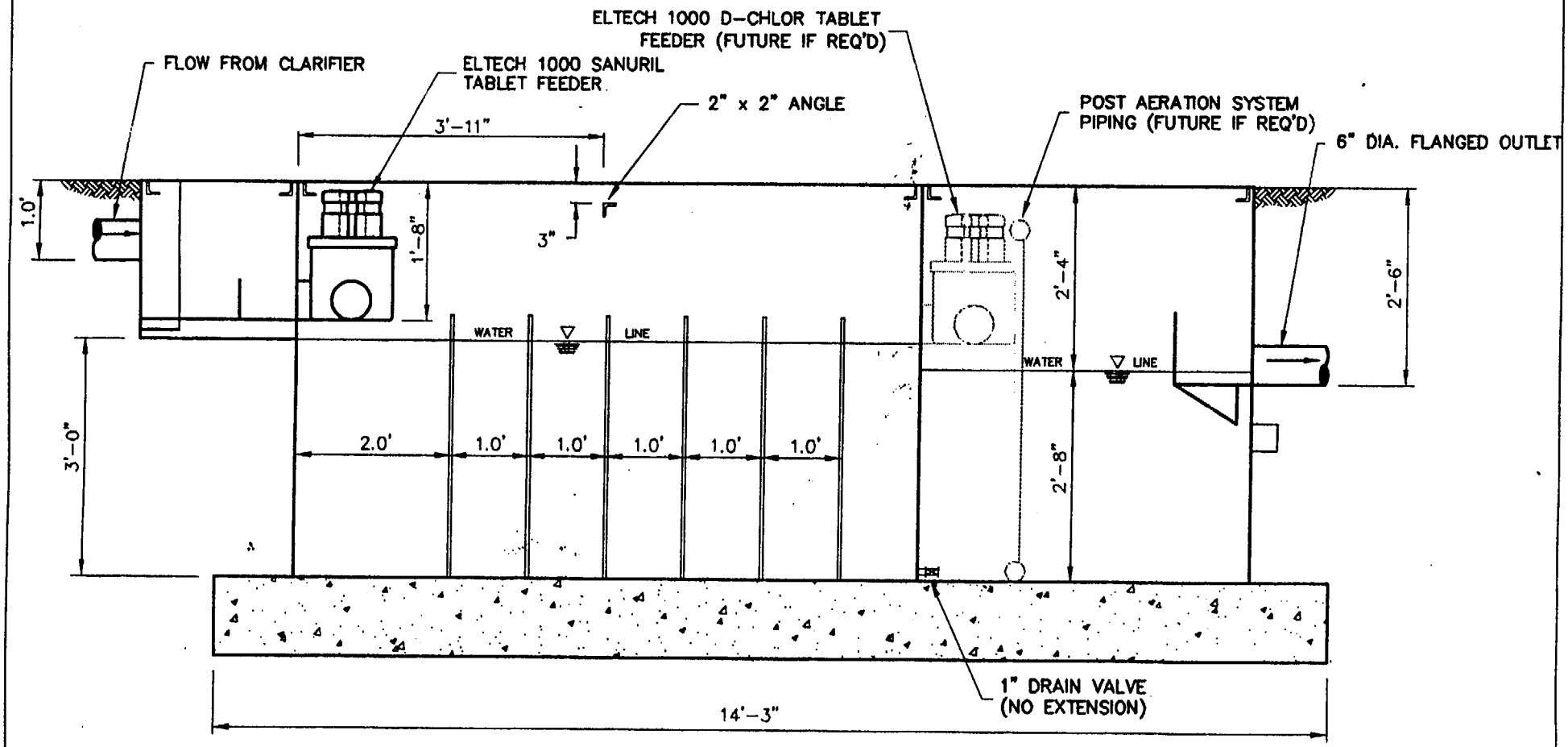

CHLORINATION/DECHLORINATION/POST AERATION TANK SECTION

FIGURE 12

a. Tablet Feeders

The tablet feeders which would be installed if required are Eltech Model 1000 tablet feeders capable of treating approximately 50,000 GPD each. D-Chlor sodium sulfite tablets would be used to remove the chlorine present in the wastewater.

b. Aeration System

The aeration system which would be installed if required would be supplied by the aeration blowers in the equipment building. Each diffuser header would be provided with its own air control valve.

c. Flow Meter

The flow meter transducer provided in the stilling well of the dechlorination/post aeration chamber is a TN Technologies MeasureTech SCM sonic level transducer and the transmitter is located in the equipment building.

H. Outfall

In order to discharge the finished effluent to the discharge canal, the plant outfall is provided with 6" piping and two (2) concrete pipe supports/ anchors.

I. Plant Water System

A 2" water line extends from the power plant water main at the security building to the equipment building. A backflow prevention assembly is provided on the supply line in the building prior to feeding the lab sink, water closet, and yard hydrants.

J. Plant Alarm System

Four (4) alarm conditions are annunciated at the main control panel which are also annunciated in the motor control room of the power plant. In addition, a fifth alarm condition, loss of power to the treatment plant, is monitored and annunciated in the power plant motor control room.

The alarm conditions are as follows:

1. Primary equalization pump fails to start.

2. High water condition in the equalization tank.

3. Primary equalization tank blower fails to start.

4. Primary aeration/sludge holding/settling tank blower fails to start.

5. Loss of power to treatment plant.

K. Plant HVAC System

An IPI 5 KW, 480 V unit heater , a Carrier 9000 BTU/HR, 230 V air conditioner and a Loren Cook 1/6 HP, 115 V roof ventilator are provided in the main portion of the equipment building.

A Loren Cook 110 V ceiling fan is provided in the rest room.

L. Emergency Power

In the event that the primary power source fails, an alternate source is provided. Wiring, conduit, concrete encasement, three electrical manholes, and the existing MCC-1 in the power plant warehouse is provided for the emergency power.

M. Miscellaneous Equipment

To aid in emptying the treatment tanks, a portable sump pump is provided at the plant.

N. Laboratory Equipment

The following equipment are provided in the laboratory: a Fischer Model 805 MP & Fischer Accument Model AB15 to measure pH, a YSI 59 & YSI 55 to measure dissolved oxygen, a Sarorius Research A200D balance, a VWR Scientific Model 1310 oven, a Precision Model 181 water bath, a Hach DR 2000 & Hach Pocket Colorimeter to measure chlorine, a Mettler Model DL21 to measure alkalinity, and a Fischer Micrometer II microscope. **Figure 13** shows the laboratory areas of the laboratory/equipment building.

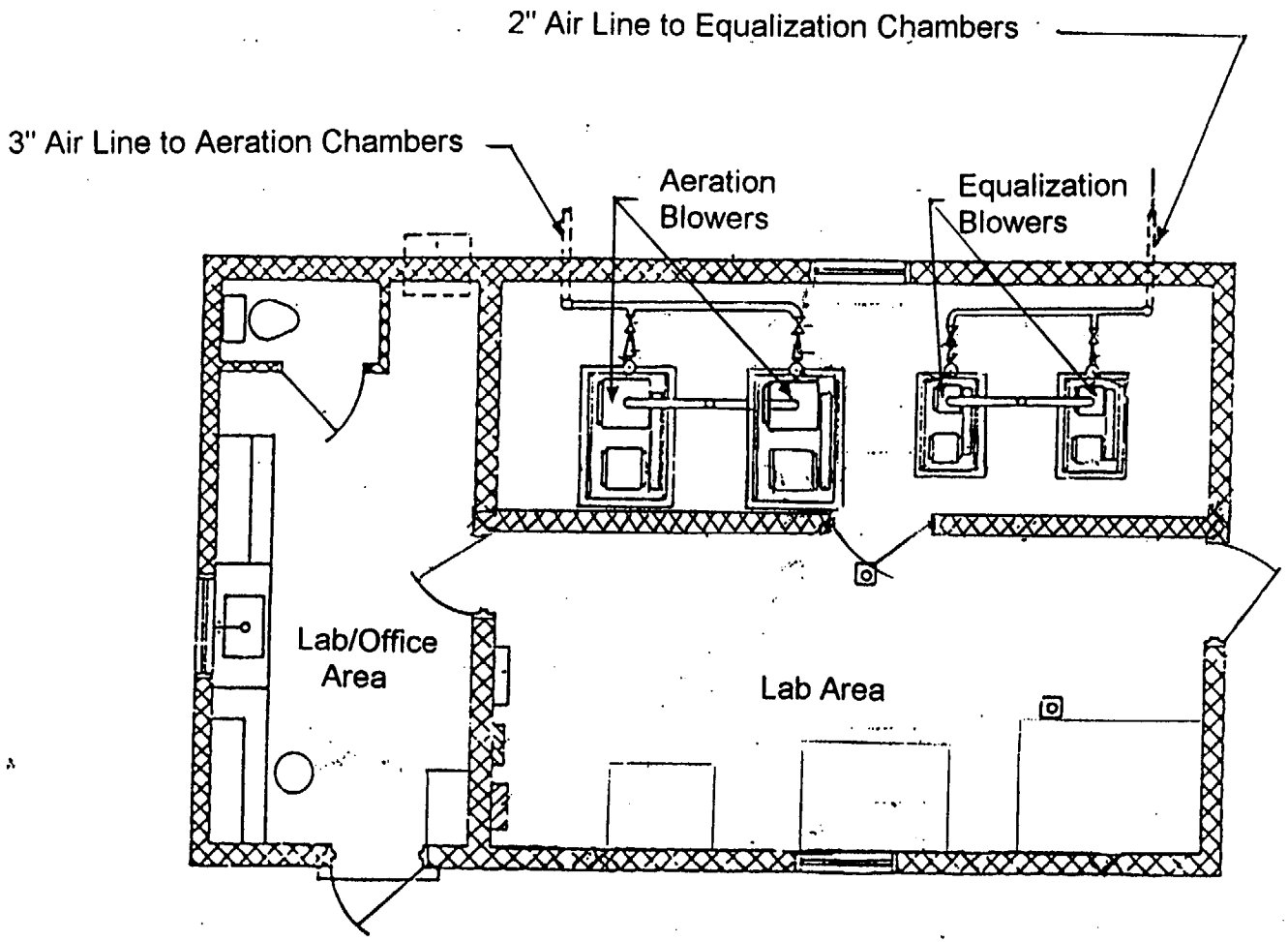

LABORATORY/EQUIPMENT BUILDING

FIGURE 13

VPDES Sewage Sludge Permit Application Form

VPDES SEWAGE SLUDGE PERMIT APPLICATION FORM

SCREENING INFORMATION

This application is divided into sections. Sections A and E pertain to all applicants. The applicability of Sections B, C and D depend on your facility's sewage sludge use or disposal practices. The information provided on this page will indicate which sections to fill out.

1. All applicants must **complete Section A** (General Information).

2. Does this facility generate sewage sludge? X Yes _No

   Does this facility derive a material from sewage sludge? __Yes _X No

   If you answered Yes to either, **complete Section B** (Generation Of Sewage Sludge Or Preparation Of A Material Derived From Sewage Sludge).

3. Does this facility apply sewage sludge to the land? __Yes X No

   Is sewage sludge from this facility applied to the land? _Yes X No

   If you answered Yes to either, answer the following three questions: **NA**

   a. Does the sewage sludge from this facility meet the pollutant concentrations, Class A pathogen reduction requirements and one of the vector attraction reduction requirements 1-8, as identified in the instructions? __Yes __No

   b. Is sewage sludge from this facility placed in a bag or other container for sale or give-away? __Yes __No

   c. Is sewage sludge from this facility sent to another facility for treatment (including blending) or placement in a bag or other container for sale or give-away? __Yes __No

   If you answered No to all three, complete Section C (Land Application Of Bulk Sewage Sludge).

   If you answered Yes to a, b or c, skip Section C.

4. Do you own or operate a surface disposal site? __Yes X No

   If Yes, complete Section D (Surface Disposal).

5. **All applicants must complete Section E (Certification).**

SECTION A. GENERAL INFORMATION

All applicants must complete this section.

1. Facility Identification.
   a. Name of facility: **Virginia Power – North Anna Power Station**
   b. Facility contact: Name: **Pamela F. Faggert**
      Title: **Vice President and Chief Environmental Officer**
      Phone: **(804) 273-3467**
   c. Facility mailing address:
      Street or P.O. Box: **5000 Dominion Boulevard**
      City or Town: **Glen Allen** State: **Virginia** Zip: **23060**
   d. Facility location:
      Street or Route #: **1022 Haley Drive**
      County: **Louisa**
      City or Town: **Mineral** State: **Virginia** Zip: **23117**
   e. Facility latitude: **39 03 47** Facility longitude: **77 46 56**
   f. Is this facility a Class I sludge management facility? ___Yes **X** No If yes, submit the results of a toxicity characteristic leaching procedure (TCLP) performed on this facility's sewage sludge. Submit the results of all TCLPs performed during the last five years, if not previously submitted. **Sample Date 4/22/96**
   g. Facility design influent flow rate: **30,000 gpd** ~~mgd~~
   h. Total population served:
   i. Indicate the type of facility:
      ___ Publicly owned treatment works (POTW)
      X Privately owned treatment works
      ___ Federally owned treatment works
      ___ Blending or treatment operation
      ___ Surface disposal site
      ___ Other explain:

2. Permit Information.
   a. Facility's VPDES permit number (if applicable): **VA0052451**
   b. List below all other federal, state or local permits or construction approvals received or applied for that regulate this facility's sewage sludge management practices:

Permit Number:	Type of Permit:
N/A	**Sludge Disposal Plan for the North Anna Power Station STP, Louisa County approved by DEQ on 6/10/96, revised by letter dated 10/20/97**

3. Owner/Operator Information.
   a. Are you the owner of this facility? **X** Yes ___No If no, provide the owner's:
      Name:
      Street or P.O. Box:
      City or Town: _____ State: _____ Zip:
      Phone: ( )
   b. Are you the operator of this facility? **X** Yes ___No If no, provide the operator's:
      Name:
      Street or P.O. Box:
      City or Town: _____ State: _____ Zip:
      Phone: ( )

4. Indian Lands. Does any generation, treatment, storage, application to land or disposal of sewage sludge from this facility occur on Indian lands? ___Yes **X** No If yes, describe:

5. **Topographic Map.** Provide a topographic map or maps (or other appropriate maps if a topographic map is unavailable) that shows the following items of information. Maps should include the area one mile beyond all property boundaries of the facility:
   a. Location of all sewage sludge management facilities, including locations where sewage sludge is generated, treated, land applied or disposed.
   b. Location of all water bodies within one mile beyond the facility's property boundaries.
   c. Location of all wells used for drinking water listed in public records or otherwise known to the applicant within 1/4 mile of the property boundaries. **See VPDES Outfall Location Map**

6. **Line Drawing.** Provide a line drawing and/or a narrative description that identifies all sewage sludge processes that will be employed during the term of the permit including all processes used for collecting, dewatering, storing, or treating sewage sludge, the destination(s) of all liquids and solids leaving each unit, and all methods used for pathogen reduction and vector attraction reduction. **The line drawing is attached to this application form.**

7. Contractor Information. Are any operational or maintenance aspects of this facility related to sewage sludge generation, treatment, use or disposal the responsibility of a contractor?
   X Yes __No **HOLDING TANK, LIQUID SLUDGE**
   If yes, provide the following for each contractor (attach additional pages if needed).
   Name: **Hauler – Stamie E. Lyttle Co., Inc. (Buck Accashian – Mgr Service Dept)**
   Street or P.O. Box: **2210 Belt Blvd., at Hopkins Rd. P. O. Box 24205**
   City or Town: **Richmond** State: **VA** Zip: **23224**
   Phone: **(804) 232-6774**
   Contractor's Federal, State or Local Permit Number(s) applicable to this facility's sewage sludge:

   If the contractor is responsible for the use and/or disposal of the sewage sludge, provide a legible copy(s) of the contract or a description of the service to be provided to the applicant and the respective obligations of the applicant and the contractor(s). **N/A**
   Provide a legible copy of any leasing agreements related to treatment and storage facilities not under direct ownership of the applicant, which identifies the parties involved. **N/A**

8. Pollutant Concentrations. Using the table below or a separate attachment, provide existing data on the pollutant concentrations in sewage sludge from this facility. Provide all data for the last two years. If data from the last two years are unavailable, provide the most recent data. **This data from 4/30/96 is still representative.**

POLLUTANT	CONCENTRATION (mg/kg dry weight)	SAMPLE TYPE	SAMPLE DATE	DETECTION LEVEL FOR ANALYSIS
Arsenic	<0.010		4/30/96	0.010
Cadmium	<0.05		4/30/96	0.05
Copper				
Lead	<0.65		4/30/96	0.65
Mercury	<0.001		4/30/96	0.001
Molybdenum				
Nickel				
Selenium	<0.010		4/30/96	0.010
Zinc				
Barium	<0.20		4/30/96	0.20
Chromium	<0.15		4/30/96	0.15
Silver	<0.0004		4/30/96	0.0004

FACILITY NAME: North Anna Power Station VPDES PERMIT NUMBER: VA0052451

SECTION B. GENERATION OF SEWAGE SLUDGE OR PREPARATION OF A MATERIAL DERIVED FROM SEWAGE SLUDGE

Complete this section if your facility generates sewage sludge or derives a material from sewage sludge

1. Total dry metric tons of sewage sludge generated at your facility per 365-day period: <1 tons

2. Amount Received from Off Site. If your facility receives sewage sludge from another facility for treatment, use or disposal, provide the following information for each facility from which sludge is received. If you receive sewage sludge from more than one facility, attach additional pages as needed. **N/A**
   a. Name of facility:
   b. Facility contact:
      Phone ( )
   c. Mailing address:
      Street or P.O. Box:
      City or Town:_____ State:_____ Zip:
   d. Facility location:
      (not P.O. Box)
   e. Total dry metric tons per 365-day period received from this facility:_____ tons
   f. Describe on this form or on another sheet of paper any treatment processes known to occur at the off-site facility, including blending activities and treatment to reduce pathogens or vector attraction characteristics:

3. Treatment Provided at Your Facility. **N/A**
   a. Which class of pathogen reduction is achieved for the sewage sludge at your facility?
      __Class A __Class B __Neither or unknown
   b. Describe on this form or another sheet of paper any treatment processes used at your facility to reduce pathogens in sewage sludge:

   c. Which vector attraction reduction option is met for the sewage sludge at your facility?
      __ Option 1 (Minimum 38 percent reduction in volatile solids)
      __ Option 2 (Anaerobic process, with bench-scale demonstration)
      __ Option 3 (Aerobic process, with bench-scale demonstration)
      __ Option 4 (Specific oxygen uptake rate for aerobically digested sludge)
      __ Option 5 (Aerobic processes plus raised temperature)
      __ Option 6 (Raise pH to 12 and retain at 11.5)
      __ Option 7 (75 percent solids with no unstabilized solids)
      __ Option 8 (90 percent solids with unstabilized solids)
      __ None or unknown
   d. Describe on this form or another sheet of paper any treatment processes used at your facility to reduce vector attraction properties of sewage sludge:

   e. Describe on this form or another sheet of paper any other sewage sludge treatment activities, including blending, not identified in a - d above:

4. Preparation of Sewage Sludge Meeting Pollutant Concentrations, Class A Pathogen Requirements and One of Vector Attraction Reduction Options 1-8. **N/A**
   (If sewage sludge from your facility does not meet all of these criteria, skip Question 4.)

   a. Total dry metric tons per 365-day period of sewage sludge subject to this section that is applied to the land: tons
   b. Is sewage sludge subject to this section placed in bags or other containers for sale or give-away?
      __Yes __No

5. Sale or Give-Away in a Bag or Other Container. N/A

(Complete this question if you place sewage sludge in a bag or other container for sale or give-away prior to land application. Skip this question if sewage sludge is covered in Question 4.)

a. Total dry metric tons per 365-day period of sewage sludge placed in a bag or other container at your facility for sale or give-away:_____ tons

b. Attach to this form a copy of all labels or notices that accompany the sewage sludge being sold or given away in a bag or other container.

6. Shipment Off Site for Treatment or for Sale or Give-Away.

(Complete this question if sewage sludge from your facility is sent to another facility that provides treatment or that places the sewage sludge in a bag or other container for sale or give-away. This question does not apply to sewage sludge sent directly to a land application or surface disposal site. Skip this question if the sewage sludge is covered in Questions 4 or 5. If you send sewage sludge to more than one facility, attach additional sheets as needed.)

a. (1) Name of receiving facility: Louisa County Water Authority - Non-Rad. Sludge Only

b. (1) Facility contact: Name: H. Barlow Delk
Title: General Manager
Phone: (703) 967-1122
Street or P.O. Box: P. O. Box 9
City or Town: Louisa State: VA Zip: 23093

a. (2) Name of receiving facility: Hanover County Dept. Public Utilities - Non-Rad. Sludge Only

b. (2) Facility contact: Name: Glenn A. Smith - Utility Services Manager
Phone: (804) 537-6020
Street or P.O. Box: P. O. Box 470
City or Town: Hanover State: VA Zip: 23069-0470

a. (3) Name of receiving facility: GTS Duratek – Low Level Rad-Waste Only

b. (3) Facility contact: Name: Laura Williams - Service Representative
Phone: 423-220-1613
Street or P.O. Box: 1560 Bear Creek Road, PO Box 2530
City or Town: Oak Ridge State: Tennessee Zip: 37830

a. (4) Name of receiving facility: Allied Technology Group – Low Level Rad-Waste Only

b. (4) Facility contact: Name: Sherry Fleming - Service Representative
Phone: 423-425-5037
Street or P.O. Box: 1568 Bear Creek Road
City or Town: Oak Ridge State: Tennessee Zip: 37830

a. (5) Name of receiving facility: US Ecology – Low Level Rad-Waste Only

b. (5) Facility contact: Name: Walt Blatchford – NE Regional Sales Manager
Phone: 423-482-5532
Street or P.O. Box: 1568 Bear Creek Road
City or Town: Oak Ridge State: Tennessee Zip: 37830

a. (6) Name of receiving facility: Chem-Nuclear Systems, LLC – Low Level Rad-Waste Only
Barnwell Waste Management Facility

b. (6) Facility contact: Name: Mark S. Lewis – Regional Manager
Phone: 803-758-1827
Street or P.O. Box: 740 Osborn Road
City or Town: Barnwell State: South Carolina Zip: 37830

c. Total dry metric tons per 365-day period of sewage sludge sent to receiving facility: <1 tons

d. List on this form or an attachment the receiving facility's VPDES permit number as well as the numbers of all other federal, state or local permits that regulate the receiving facility's sewage sludge use or disposal practices:

Permit Number:	Type of Permit:
VA0052451	VPDES Permit

e. Does the receiving facility provide additional treatment to reduce pathogens in sewage sludge from your facility? ____Yes X No

Which class of pathogen reduction is achieved for the sewage sludge at the receiving facility? N/A

Class A ___Class B ___None or unknown

Describe on this form or another sheet of paper any treatment processes used at the receiving facility to reduce pathogens in sewage sludge: N/A

f. Does the receiving facility provide additional treatment to reduce vector attraction characteristics of the sewage sludge? ____Yes X No

Which vector attraction reduction option is met for the sewage sludge at the receiving facility? N/A

___ Option 1 (Minimum 38 percent reduction in volatile solids)
___ Option 2 (Anaerobic process, with bench-scale demonstration)
___ Option 3 (Aerobic process, with bench-scale demonstration)
___ Option 4 (Specific oxygen uptake rate for aerobically digested sludge)
___ Option 5 (Aerobic processes plus raised temperature)
___ Option 6 (Raise pH to 12 and retain at 11.5)
___ Option 7 (75 percent solids with no unstabilized solids)
___ Option 8 (90 percent solids with unstabilized solids)
___ None or unknown

Describe on this form or another sheet of paper any treatment processes used at the receiving facility to reduce vector attraction properties of sewage sludge: N/A

g. Does the receiving facility provide any additional treatment (including blending) not identified in e or f above? ____Yes X No

If yes, describe on this form or another sheet of paper the treatment processes not identified in e or f above:

h. If you answered yes to e, f or g above, attach a copy of any information you provide to the receiving facility to comply with the "notice and necessary information" requirement of 9 VAC 25-31-530. N/A

i. Does the receiving facility place sewage sludge from your facility in a bag or other container for sale or give-away? ____Yes X No If yes, provide a copy of all labels or notices that accompany the product being sold or given away.

7. Land Application of Bulk Sewage Sludge. N/A

(Complete Question 7.a if sewage sludge from your facility is applied to the land, unless the sewage sludge is covered in Questions 4, 5 or 6; complete Question 7.b & c only if you are responsible for land application of sewage sludge.)

a. Total dry metric tons per 365-day period of sewage sludge applied to land application sites:____tons

b. Do you identify all land application sites in Section C of this application? ___Yes ___No

If no, submit a copy of the land application plan with this application (see instructions).

c. Are any land application sites located in states other than Virginia? ___Yes ___No

If yes, describe on this form or on another sheet of paper how you notify the permitting authority for the states where the land application sites are located.

Provide a copy of the notification.

8. Surface Disposal. N/A

(Complete Question 8 if sewage sludge from your facility is placed on a surface disposal site.)

a. Total dry metric tons per 365-day period of sewage sludge from your facility placed on all surface disposal sites: _____ tons

b. Do you own or operate all surface disposal sites to which you send sewage sludge for disposal?
__Yes __No If no, answer questions c - h for each surface disposal site that you do not own or operate. If you send sewage sludge to more than one surface disposal site, attach additional pages as needed.

c. Site name or number:

d. Site contact: Name:
Title:
Phone: ( )
Contact is: __Site Owner __Site operator

e. Site mailing address.
Street or P.O. Box:
City or Town:_____ State:_____ Zip:

f. Site location.
Street or Route #:
County:
City or Town: _____ State:_____ Zip:

g. Total dry metric tons per 365-day period of sewage sludge from your facility placed on this surface disposal site: _____ tons

h. List on this form or an attachment the surface disposal site VPDES permit number as well as the numbers of all other federal, state or local permits that regulate the sewage sludge use or disposal practices at the surface disposal site:

Permit Number:	Type of Permit:
_____	
_____	

9. Incineration. N/A

(Complete Question 9 if sewage sludge from your facility is fired in a sewage sludge incinerator.)

a. Total dry metric tons per 365-day period of sewage sludge from your facility fired in a sewage sludge incinerator: _____ tons

b. Do you own or operate all sewage sludge incinerators in which sewage sludge from your facility is fired?
Yes __No If no, answer questions c - h for each sewage sludge incinerator that you do not own or operate. If you send sewage sludge to more than one sewage sludge incinerator, attach additional pages as needed.

c. Incinerator name or number:

d. Incinerator contact:Name:
Title:
Phone: ( )
Contact is: __Incinerator Owner __Incinerator Operator

e. Incinerator mailing address.
Street or P.O. Box:
City or Town:_____ State:_____ Zip:

f. Incinerator location.
Street or Route #:
County:
City or Town: _____ State:_____ Zip:

g. Total dry metric tons per 365-day period of sewage sludge from your facility fired in this sewage sludge incinerator: _____ tons

h. List on this form or an attachment the numbers of all other federal, state or local permits that regulate the firing of sewage sludge at this incinerator:

Permit Number:	Type of Permit:
_____	
_____	

10. Disposal in a Municipal Solid Waste Landfill. N/A

(Complete Question 10 if sewage sludge from your facility is placed on a municipal solid waste landfill. Provide the following information for each municipal solid waste landfill on which sewage sludge from your facility is placed. If sewage sludge is placed on more than one municipal solid waste landfill, attach additional pages as needed.)

a. Landfill name:

b. Landfill contact: Name:
Title:
Phone: ( )
Contact is: __Landfill Owner __Landfill Operator

c. Landfill mailing address.
Street or P.O. Box:
City or Town:_____ State:_____ Zip:

d. Landfill location.
Street or Route #:
County:
City or Town: _____ State:_____ Zip:

e. Total dry metric tons per 365-day period of sewage sludge placed in this municipal solid waste landfill:
_____ tons

f. List on this form or an attachment the numbers of all federal, state or local permits that regulate the operation of this municipal solid waste landfill:

Permit Number:	Type of Permit:
_____	
_____	

g. Does sewage sludge meet applicable requirements in the Virginia Solid Waste Management Regulation, 9 VAC 20-80-10 et seq., concerning the quality of materials disposed in a municipal solid waste landfill?
Yes __No

h. Does the municipal solid waste landfill comply with all applicable criteria set forth in the Virginia Solid Waste Management Regulation, 9 VAC 20-80-10 et seq.? __Yes __No

SECTION C. LAND APPLICATION OF BULK SEWAGE SLUDGE N/A

Complete this section for sewage sludge that is land applied unless any of the following conditions apply:
The sewage sludge meets the Table 3 pollutant concentrations, Class A pathogen requirements and one of the vector attraction reduction options 1-8 (fill out B.4 instead); or
The sewage sludge is sold or given away in a bag or other container (fill out B.5 instead); or
You provide the sewage sludge to another facility for treatment or placement in a bag or other container (fill out B.6 instead).
Complete Section C for every site on which the sewage sludge that you reported in B.7 is land applied.

1. Identification of Land Application Site.
   a. Site name or number:
   b. Site location
      i. Street or Route#:
         County:
         City or Town: _____ State: _____ Zip:
      ii. Latitude:_____ Longitude:

2. Owner Information.
   a. Are you the owner of this land application site? ___Yes ___No
   b. If no, provide the following information for the owner:
      Name:
      Street or P.O. Box:
      City or Town: _____ State:_____ Zip:
      Phone: ( )

3. Applier Information:
   a. Are you the person who applies, or who is responsible for application of, sewage sludge to this land application site? ___Yes ___No
   b. If no, provide the following information for the person who applies the sludge:
      Name:
      Street or P.O. Box:
      City or Town:_____ State:_____ Zip:
      Phone: ( )
   c. List on this form or an attachment the numbers of all federal, state or local permits that regulate the person who applies sludge to this land application site:
      Permit Number: Type of Permit:
      _____
      _____

4. Site Type. Identify the type of land application site from among the following:
   ___Agricultural land ___Reclamation site ___Forest
   ___Public contact site ___Other, specify

5. Vector Attraction Reduction.
   Are any vector attraction reduction requirements met when sewage sludge is applied to the land application site?
   Yes ___No If yes, answer a and b.

   a. Indicate which vector attraction reduction option is met:
      ___ Option 9 (Injection below land surface)
      ___ Option 10 (Incorporation into soil within 6 hours)
   b. Describe on this form or on another sheet of paper any treatment processes used at the land application site to reduce the vector attraction properties of sewage sludge:

6. Ground Water Monitoring.
Are any ground water monitoring data available for this land application site? __Yes __No
If yes, submit the ground water monitoring data with this permit application. Also submit a written description of the well locations, approximate depth to ground water, and the ground water monitoring procedures used to obtain these data.

7. Cumulative Loadings and Remaining Allotments.
(Complete Question 7 only if the sewage sludge applied to this site since July 20, 1993 is subject to the cumulative pollutant loading rates (CPLRs) - see instructions.)

a. Have you contacted DEQ or the permitting authority in the state where the sewage sludge subject to the CPLRs will be applied to ascertain whether bulk sewage sludge subject to the CPLRs has been applied to this site since July 20, 1993? __Yes __No
If no, sewage sludge subject to the CPLRs may not be applied to this site.
If yes, provide the following information:
Name of permitting authority:
Contact person:
Phone:( )

b. Based upon this inquiry, has bulk sewage sludge subject to the CPLRs been applied to this site since July 20, 1993? __Yes __No If no, skip the rest of Question 7. If yes, answer questions c - g.

c. Site size, in hectares: _____ (one hectare = 2.471 acres)

d. Dry metric tons of sewage sludge per hectare from your facility applied to this site per 365-day period:
_____ tons

e. Total dry metric tons of sewage sludge from your facility applied to this site over the life of the site:
_____ tons

f. Provide the following information for every facility other than yours that is sending or has sent sewage sludge subject to the CPLRs to this site since July 20, 1993. If more than one such facility sends sewage sludge to this site, attach additional pages as needed.
Name of facility:
Facility contact: Name:
Title:
Phone: ( )
Facility mailing address.
Street or P.O. Box:
City or Town:_____ State:_____ Zip:

g. Provide the total loading and allotment remaining, in kg/hectare, for each of the following pollutants:

	Cumulative loading	Allotment remaining
Arsenic	_____	
Cadmium	_____	
Copper	_____	
Lead	_____	
Mercury	_____	
Nickel	_____	
Selenium	_____	
Zinc	_____	

Complete Questions 8-12 below only if you apply sewage sludge, or you are responsible for land application of sewage sludge. Information required by these questions may be prepared as attachments to this form. Skip the following questions if you contract land application to someone else (as indicated under Section A.7) who is responsible for the operation.

8. Sludge Characterization. Use the table below or a separate attachment, provide at least one analysis for each parameter.

PCBs (mg/kg)
pH (S. U.)
Percent Solids (%)

Ammonium Nitrogen (mg/kg)
Nitrate Nitrogen (mg/kg)
Total Kjeldahl Nitrogen (mg/kg)
Total Phosphorus (mg/kg)
Total Potassium (mg/kg)
Alkalinity as $CaCO_3$* (mg/kg)

* Lime treated sludge (10% or more lime by dry weight) should be analyzed for percent $CaCO_3$.

9. Storage Requirements.
Existing and proposed sludge storage facilities must provide an estimated annual sludge balance on a monthly basis incorporating such factors as storage capacity, sludge production and land application schedule. Include pertinent calculations justifying storage requirements.
Proposed sludge storage facilities must also provide the following information:

a. A sludge storage site layout on a 7.5 minute topographic quadrangle or other appropriate scaled map to show the following topographic features of the surrounding landscape to a distance of 0.25 mile. Clearly mark the property line.
   1) Water wells, abandoned or operating
   2) Surface waters
   3) Springs
   4) Public water supply(s)
   5) Sinkholes
   6) Underground and/or surface mines
   7) Mine pool (or other) surface water discharge points
   8) Mining spoil piles and mine dumps
   9) Quarry(s)
   10) Sand and gravel pits
   11) Gas and oil wells
   12) Diversion ditch(s)
   13) Agricultural drainage ditch(s)
   14) Occupied dwellings, including industrial and commercial establishments
   15) Landfills or dumps
   16) Other unlined impoundments
   17) Septic tanks and drainfields
   18) Injection wells
   19) Rock outcrops
b. A topographic map of sufficient detail to clearly show the following information:
   1) Maximum and minimum percent slopes
   2) Depressions on the site that may collect water
   3) Drainageways that may attribute to rainfall run-on to or runoff from this site
   4) Portions of the site (if any) which are located with the 100-year floodplain and how the storage facility will be protected from flooding
c. Data and specifications for the storage facility lining material.
d. Plan and cross-sectional views of the storage facility.
e. Depth from the bottom of the storage facility to the seasonal high water table and separation distance to the permanent water table.

10. Land Area Requirements. Provide calculations justifying the land area requirements for land application of sewage sludge taking into consideration average soil productivity group, crop(s) to be grown and most limiting factor(s) of the sewage sludge, specifically Plant Available Nitrogen (PAN), Calcium Carbonate Equivalence (CCE), and metal loadings (CPLR sewage sludge only), where applicable. Relate PAN, CCE, and metal loadings to demonstrate the most limiting factor for land application.

11. Landowner Agreement Forms. Provide a properly completed Sludge Application Agreement Form (attached) for each landowner if sewage sludge is to be applied onto land not owned by the applicant.

12. Land Application Site Information.
(Complete Items a-d for sites receiving infrequent application - land application of sewage sludge up to the agronomic rate at a frequency of once in a 3 year period; complete Items a-h for sites receiving frequent application - land application of sewage sludge in excess of 70% the agronomic rate at a frequency greater than once in a 3 year period)

a. Provide a general location map for each county which clearly indicates the location of all the land application sites.

b. For each land application site provide a site plan of sufficient detail to clearly show the concerned landscape features and associated buffer zones (See instructions). Provide a legend for each landscape feature and the net acreage for each field taking into account the proposed buffer zones.

c. In order to ensure that land application of bulk sewage sludge will not impact federally listed threatened or endangered species or federally designated critical habitat, the applicant must notify the field office of the U. S. Department of the Interior, Fish and Wildlife Service (FWS), by a letter, the proposed land application activities with the identification of the land application sites. The address and phone number of FWS are provided below.

U. S. Fish and Wildlife Service
Virginia Field Office
P. O. Box 480
White Marsh, VA 23183
TEL: (804)693-6694

Provide a copy of the notification letter with this application form.

d. Provide a soil survey map, preferably photographically based, with the field boundaries clearly marked. (A USDA-SCS soil survey map should be provided, if available.)
Provide a detailed legend for each soil survey map which uses accepted USDA-SCS descriptions of the typifying pedon for each soil series (soil type). Complex associations may be described as a range of characteristics. Soil descriptions shall include as a minimum the following information.
1) Soil symbol
2) Soil series, textural phase and slope range
3) Depth to seasonal high water table
4) Depth to bedrock
5) Estimated soil productivity group (for the proposed crop rotation)

Items e - h are required for sites receiving frequent application of sewage sludge

e. In order to verify the information provided in item d, characterize the soil at each land application site. Representative soil borings or test pits to a depth of five feet or to bedrock if shallower, are to be coordinated for the typifying pedon of each soil series (soil type). Soil descriptions shall include as a minimum the following information:
1). Soil symbol
2). Soil series, textural phase and slope range
3). Depth to seasonal high water table
4). Depth to bedrock
5). Estimated soil productivity group (for the proposed crop rotation)

f. Collect and analyze soil samples from each field, weighted to best represent each of the soil borings performed for Item e. Using the table below or a separate attachment, provide at least one analysis per sample for each of the following parameters.

Soil Organic Matter (%)
Soil pH (std. units)
Cation Exchange Capacity (meq/100g)
Total Nitrogen (ppm)
Organic Nitrogen (ppm)
Ammonia Nitrogen (ppm)
Nitrate Nitrogen (ppm)
Available Phosphorus (ppm)
Exchangeable Potassium (mg/100g)
Exchangeable Sodium (mg/100g)
Exchangeable Calcium (mg/100g)
Exchangeable Magnesium (mg/100g)
Arsenic (ppm)
Cadmium (ppm)
Copper (ppm)
Lead (ppm)
Mercury (ppm)
Molybdenum (ppm)
Nickel (ppm)
Selenium (ppm)
Zinc (ppm)
Manganese (ppm)
Particle Size Analysis or
USDA Textural Estimate (%)

g. Relate the crop nutrient needs to anticipated yields, soil productivity rating and the various fertilizer or nutrient sources from sludge and chemical fertilizers. Describe any specialized agronomic management practices which may be required as a result of high soil pH. If the sludge is expected to possess an unusually high CCE or other unusual properties, provide a description of any plant tissue testing, supplemental fertilization or intensive agronomic management practices which may be necessary.

h. Using a narrative format and referencing any related charts, describe the proposed cropping system. Show how the crop rotation and management will be coordinated with the design of the land application system. Include any supplemental fertilization program, soil testing and the coordination of tillage practices, planting and harvesting schedules and timing of land application.

SLUDGE APPLICATION AGREEMENT

This sludge application agreement is made on this date _____ between _____, referred to here as "landowner", and _____, referred to here as the "Permittee".

Landowner is the owner of agricultural land shown on the map attached as Exhibit A and designated there as _____ ("landowner's land"). Permittee agrees to apply and landowner agrees to comply with certain permit requirements following application of sewage sludge on landowner's land in amounts and in a manner authorized by VPDES permit number _____ which is held by the Permittee.

Landowner acknowledges that the appropriate application of sewage sludge will be beneficial in providing fertilizer and soil conditioning to the property. Moreover, landowner acknowledges having been expressly advised that, in order to protect public health, the following site restrictions must be adhered to when sewage sludge receives Class B treatment for pathogen reduction:

1. Food crops with harvested parts that touch the sewage sludge/soil mixture and are totally above the land surface shall not be harvested for 14 months after application of sewage sludge;

2. Food crops with harvested parts below the surface of the land shall not be harvested for 20 months after application of sewage sludge when the sewage sludge remains on the land surface for four months or longer prior to incorporation into the soil;

3. Food crops with harvested parts below the surface of the land shall not be harvested for 38 months after application of sewage sludge when the sewage sludge remains on the land surface for less than four months prior to incorporation into the soil;

4. Food crops, feed crops, and fiber crops shall not be harvested for 30 days after application of sewage sludge;

5. Animals shall not be allowed to graze on the land for 30 days after application of sewage sludge;

6. Turf grown on land where sewage sludge is applied shall not be harvested for one year after application of the sewage sludge when the harvested turf is placed on either land with a high potential for public exposure or a lawn, unless otherwise specified by the State Water Control Board;

7. Public access to land with a high potential for public exposure shall be restricted for one year after application of sewage sludge;

8. Public access to land with a low potential for public exposure shall be restricted for 30 days after application of sewage sludge.

9. Tobacco, because it has been shown to accumulate cadmium, should not be grown on landowner's land for three years following the application of sewage sludge borne cadmium equal to or exceeding 0.5 kilograms/hectare (0.45 pounds/acre).

Permittee agrees to notify landowner or landowner's designee of the proposed schedule for sludge application and specifically prior to any particular application to landowner's land. This agreement may be terminated by either party upon written notice to the address specified below.

Landowner:	Permittee:
_____	_____
Signature	Signature
_____	_____
Mailing Address	Mailing Address

SECTION D. SURFACE DISPOSAL N/A

Complete this section only if you own or operate a surface disposal site. Provide the information for each active sewage sludge unit.

1. Information on Active Sewage Sludge Units.
   a. Unit name or number:
   b. Unit location:
   c. Total dry metric tons of sewage sludge placed on the active sewage sludge unit per 365-day period: _____ tons
   d. Total dry metric tons of sewage sludge placed on the active sewage sludge unit over the life of the unit: tons
   e. Does the active sewage sludge unit have a liner with a minimum hydraulic conductivity of 1×10^{-7}cm/sec? ___Yes ___No If yes, describe the liner or attach a description.
   f. Does the active sewage sludge unit have a leachate collection system? ___Yes ___No If yes, describe the leachate collection system or attach a description. Also, describe the method used for leachate disposal and provide the numbers of any federal, state or local permits for leachate disposal:
   g. If you answered no to either e or f, answer the following:
      Is the boundary of the active sewage sludge unit less than 150 meters from the property line of the surface disposal site? ___Yes ___No If yes, provide the actual distance in meters:
   h. Remaining capacity of active sewage sludge unit, in dry metric tons:
      Anticipated closure date for active sewage sludge unit, if known:
      Provide with this application a copy of any closure plan developed for this active sewage sludge unit.

2. Sewage Sludge from Other Facilities.
   Is sewage sludge sent to this active sewage sludge unit from any facilities other than yours? ___Yes ___No
   If yes, provide the following information for each such facility, attach additional sheets as needed.
   a. Name of facility:
   b. Facility contact: Name:
      Title:
      Phone: ( )
   c. Facility mailing address.
      Street or P.O. Box:
      City or Town:_____ State:_____ Zip:
   d. List on this form or an attachment the facility's VPDES permit number as well as the numbers of all other federal, state or local permits that regulate the facility's sewage sludge management practices:
      Permit Number: Type of Permit:
      _____
      _____
   e. Which class of pathogen reduction is achieved before sewage sludge leaves the other facility?
      ___Class A ___Class B ___None or unknown
   f. Describe on this form or on another sheet of paper any treatment processes used at the other facility to reduce pathogens in sewage sludge:

g. Which vector attraction reduction option is achieved before sewage sludge leaves the other facility?
___ Option 1 (Minimum 38 percent reduction in volatile solids)
___ Option 2 (Anaerobic process, with bench-scale demonstration)
___ Option 3 (Aerobic process, with bench-scale demonstration)
___ Option 4 (Specific oxygen uptake rate for aerobically digested sludge)
___ Option 5 (Aerobic processes plus raised temperature)
___ Option 6 (Raise pH to 12 and retain at 11.5)
___ Option 7 (75 percent solids with no unstabilized solids)
___ Option 8 (90 percent solids with unstabilized solids)
___ None or unknown

h. Describe on this form or another sheet of paper any treatment processes used at the other facility to reduce vector attraction properties of sewage sludge:

i. Describe on this form or another sheet of paper any other sewage sludge treatment activities performed by the other facility that are not identified in e - h above:

3. Vector Attraction Reduction.

a. Which vector attraction reduction option, if any, is met when sewage sludge is placed on this active sewage sludge unit?
___ Option 9 (Injection below land surface)
___ Option 10 (Incorporation into soil within 6 hours)
___ Option 11 (Covering active sewage sludge unit daily)

b. Describe on this form or another sheet of paper any treatment processes used at the active sewage sludge unit to reduce vector attraction properties of sewage sludge:

4. Ground Water Monitoring.

a. Is ground water monitoring currently conducted at this active sewage sludge unit or are ground water monitoring data otherwise available for this active sewage sludge unit? ___Yes ___No If yes, provide a copy of available ground water monitoring data. Also provide a written description of the well locations, the approximate depth to ground water, and the ground water monitoring procedures used to obtain these data.

b. Has a ground water monitoring program been prepared for this active sewage sludge unit?
___Yes ___No If yes, submit a copy of the ground water monitoring program with this application.

c. Have you obtained a certification from a qualified ground water scientist that the aquifer below the active sewage sludge unit has not been contaminated? ___Yes ___No If yes, submit a copy of the certification with this application.

5. Site-Specific Limits.

Are you seeking site-specific pollutant limits for the sewage sludge placed on the active sewage sludge unit?
___Yes ___No If yes, submit information to support the request for site-specific pollutant limits with this application.

FACILITY NAME: North Anna Power Station VPDES PERMIT NUMBER: VA0052451

SECTION E. CERTIFICATION

All applicants must sign the certification statement below

I certify under penalty of law that this document and all attachments were prepared under my direction or supervision in accordance with a system designed to assure that qualified personnel properly gather and evaluate the information submitted. Based on my inquiry of the person or persons who manage the system or those persons directly responsible for gathering the information, the information is, to the best of my knowledge and belief, true, accurate and complete. I am aware that there are significant penalties for submitting false information, including the possibility of fine and imprisonment for knowing violations.

Signature: W R Matthews

Name: **W. R. Matthews**
(type or print)

Title: **Vice President – Station Manager**

Telephone number: **(540.) 894-2101**

Date Signed: 3/30/00

Flow Diagram WWTP
(required by Sewage Sludge Permit
Application, Section A.6)

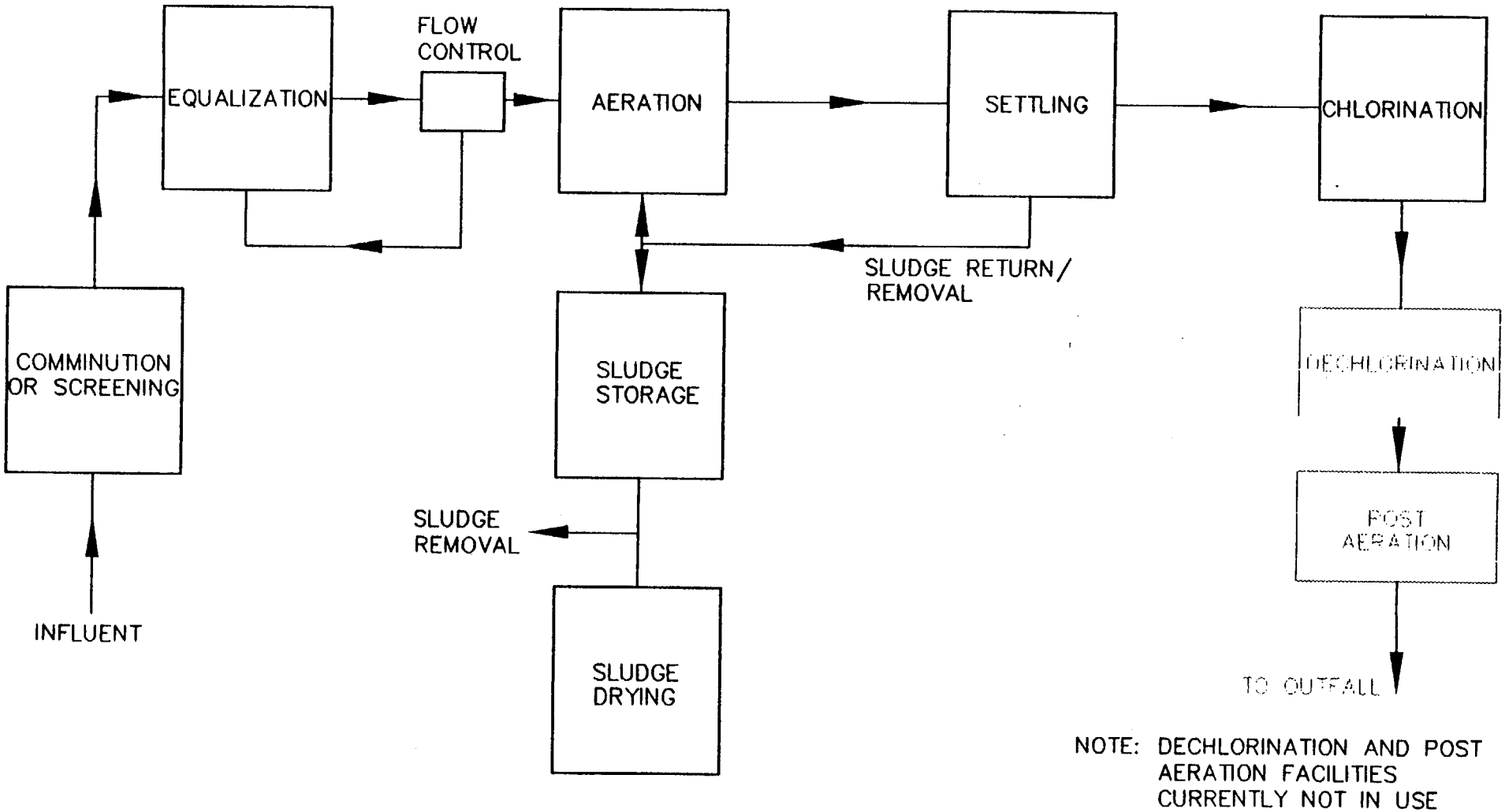

NORTH ANNA NUCLEAR POWER PLANT WWTP
PROCESS DIAGRAM

FIGURE 1

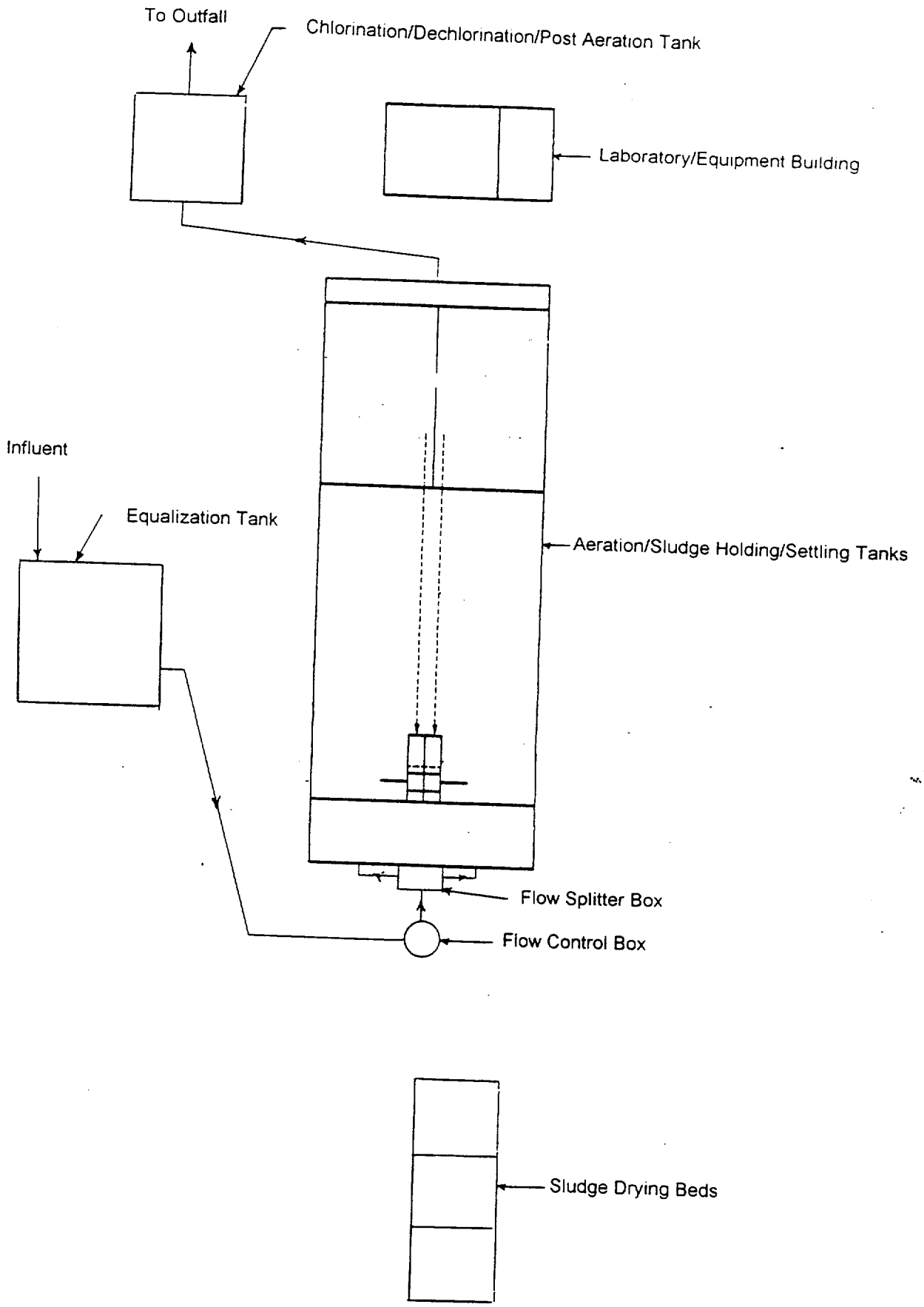

SITE PLAN

FIGURE 2

Sludge Management Plan for North Anna Power Station

10/20/97

FILE COPY

North Anna/ENV42/Sewerage Treatment

October 20, 1997

Mr. James W. Moore III, P. E.
District Engineer
Virginia Department of Health
Rockbridge Square Shopping Center
131 Walker Street
Lexington, Va. 24450-2431

RE: North Anna Power Station – Sludge Disposal Plan

Dear Mr. Moore:

As Jim Puckett previously discussed with you, North Anna Power Station is now served by a single 30,000 gpd extended aeration package sewage treatment plant. All of the smaller sewage treatment plants have been removed from service. Therefore, enclosed for your approval is a revised sludge disposal plan that accurately reflects the current mode of operation.

If you have any questions or desire additional information, please call me at (804)273-2992.

Sincerely,

Ron Birckhead
Staff Engineer

bc: (w/attach)
W. R. Matthews
D. A. Heacock
P. F. Faggert
R. L. Birckhead
A. C. Cooke ACC per recv

Revised 1/9/97

SLUDGE DISPOSAL PLAN FOR NORTH ANNA POWER STATION SEWAGE TREATMENT PLANT

General Description

North Anna Power Station is served by one large extended aeration package sewage treatment plant having a capacity of 30,000 gpd.

Sludge Holding Tanks

The North Anna sewage treatment plant has two sludge holding tanks with a capacity of 2,100 gallons each. Sludge is aerated by diffused air supplied by an air drop pipe and two diffusers in each tank.

Quantity and Quality of Sludge Wasted

Approximately five days per week, sludge is wasted to the aerated sludge holding tanks. The volume of the sludge wasted ranges from 1,000 - 5,000 gallons per week. Visual inspection and internal process monitoring by the operator will determine when wasting must be accomplished.

Sludge Removal and Handling

Prior to the disposal of liquid sludge from the sewage treatment plant, the waste will be analyzed to determine if it is free of radioactive material. Liquid sludge containing radioactive material will be wasted to the drying beds and will be handled and disposed of under the regulatory control of the Nuclear Regulatory Commission at an out of state, licensed radioactive waste disposal facility. The NRC requirements are inherently more strict than those for handling and disposal of conventional sewage sludge and should provide assurances to the Virginia agencies that such sludge would be properly disposed without detrimental impacts to human health or the environment. The exact day of sludge wasting will be noted in plant records.

Liquid sludge from the plant with no radioactive contamination would be pumped from the STP to a tank truck operated by a properly approved and licensed contractor, and transported directly to a septage receiving facility capable of, and licensed or permitted for, adequate treatment of the liquid sludge. The septage receiving facilities presently being utilised are the Louisa and Hanover sewage treatment plants.

During the transfer of sludge from the holding tank, special care would be taken to ensure that an overfill does not occur. A full-time, on-site operator is dedicated to the STP with the requirements that all pump and haul activities be coordinated through him and subject to his approval and immediate oversight. In the unlikely event of an on-site spill, the station is prepared to provide localized containment and disinfection using absorbent material and liquid sodium hypochlorite.

Only those licensed pump and haul vendors and associated off-site treatment facilities approved by the State will be utilized. The vendor shall be responsible for obtaining all the necessary sludge handling and disposal permits, and providing verification of such permits to the on-site operator.

NAPS/Env 42/Sewage Trtmnt

May 29, 1996

Janardan R. Pandey
Virginia Department of Environmental Quality
Valley Regional Water Office
P. O. Box 268
Bridgewater, VA 22812

Dear Mr. Pandey:

RE: NORTH ANNA POWER STATION - SLUDGE DRYING BED MATERIAL

As we discussed with Ms. Sue Maupin of your office on April 25, North Anna Power Station is planning to reconstruct the sludge drying beds at the sewage treatment plant. The sand and gravel to be removed from the drying beds will be land applied on-site at the power station in the large flat area referred to as the "Northwest Laydown Area". Mr. James Moore of the Virginia Department of Health (VDH) has visited the site and approved the proposal, as described in the attached letter from his office.

This proposal is consistent with the Sludge Disposal Plan for North Anna Power Station. Virginia Power will comply with the conditions in the attached letter from the VDH. Attached as you requested are copies of the radiological and TCLP analyses. Your approval of this activity would be appreciated. If you have any questions, please contact me at (804) 273-2995.

Sincerely,

Jim Puckett

J. K. Puckett, P. E.

Attachments

bc: A. W. Hadder
W. R. Matthews - NAPS
W. A. Thornton - IN/2SE
D. A. Heacock - NAPS
A. H. Stafford - NAPS
K. N. Kappatos - ODEC w/attachment
P. A. Kemp - NAPS
A. C. Cooke - NAPS OK 5/29/96 PAKP
H. L. Yowell - NAPS
E. J. Wheeler
J. W. White
Power Records Management - IN/GW w/attachment

NOTED MAY 2 8 1996 J.K.P.

COMMONWEALTH of VIRGINIA

RANDOLPH L. GORDON, M.D., M.P.H.
State Health Commissioner

Department of Health
Office of Water Programs
Environmental Engineering Field Office

ROCKBRIDGE SQUARE SHOPPING CENTER
131 WALKER STREET
LEXINGTON, VIRGINIA 24450-2431
PHONE: (540) 463-7136
FAX: (540) 463-3892

May 24, 1996

SUBJECT: Louisa County
Sewerage - North Anna Power Station

Mr. J. K. Puckett, P.E.
Virginia Power
Innsbrook Technical Center
5000 Dominion Boulevard
Glen Allen, Virginia 23060

Dear Mr. Puckett:

We are in receipt of your letter dated May 7, 1996 concerning disposal of sand and gravel from the existing sludge drying beds at the wastewater treatment works serving the North Anna Power Station, located in Louisa County. Your letter also transmitted radiological and metals analysis results performed on samples of the sand and gravel and requested approval to land apply this material on-site at the power station property.

On May 21, 1996, Mr. James W. Moore III, P.E., of this office, met with Mr. Carter Cooke at the North Anna Power Station and evaluated the proposed application area. The area chosen is referred to as the "Northwest Laydown Area" and consists of a flat, approximately 3 acre area that is partially covered with stone. The area is remote and located behind a normally locked gate.

Please be advised that the Department has no objection to the land application of the sand and gravel from the existing sludge drying beds at the North Anna Power Station as requested in your letter dated May 7, 1996. The material should be disposed of as follows:

1. All sludge should be removed from the drying beds prior to removal of the sand and gravel.

2. The removed sand and gravel should be transported to the "Northwest Laydown Area" at the North Anna Power Station and immediately spread over the flat area to a maximum depth of 2- 3 inches.

3. This office should be notified upon completion of the disposal.

SUBJECT: Louisa County
Sewerage - North Anna Power Station

If you have any questions or if we can be of additional assistance please contact Mr. James W. Moore III, P.E., District Engineer at 540/463-7136.

Very truly yours,

Ronald E. Conner, P.E.
Engineering Field Director

REC/JWM/mep
cc North Anna Power Station - Attn: Mr. A. Carter Cooke
Louisa County Health Department - Attn: Dr. Susan McLeod
Department of Environmental Quality - Bridgewater
VDH - Richmond Central

VA POWER SYSTEM LABORATORY

REPORT PRODUCED ON 04/30/96 11:20:30

ENV 50

TCLP TOXICITY TEST RESULTS

The TCLP Procedure simulates the leaching a waste will undergo if disposed of in an improperly designed sanitary landfill. In this test a representative sample is extracted with extraction fluid in a rotary agitation device for 20 hours. The extract obtained from the TCLP extraction procedure is then digested and analyzed for the eight (8) metals; arsenic, barium, cadmium, chromium, lead, mercury, selenium, and silver. If the TCLP extract contains any one of the eight metals in an amount equal to or exceeding the levels set in 40 CFR 261.24, then the waste has the characteristics of Extraction Procedure Toxicity, and is a hazardous waste.

The TCLP Toxicity maximum for the eight (8) metals is as follows

Arsenic as As	5.0 ppm	Lead as Pb	5.0 ppm
Barium as Ba	100.0 ppm	Mercury as Hg	0.2 ppm
Cadmium as Cd	1.0 ppm	Selenium as Se	1.0 ppm
Chromium as Cr	5.0 ppm	Silver as Ag.	5.0 ppm

SAMPLE DATA

LOCATION : NORTH ANNA

SUBMITTER : H. YOWELL

UNIT :
SAMPLE DATE : 04/22/96
SAMPLE DESCRIPTION : SAND FROM S.T.P. DRYING BEDS

SYSTEM LABORATORY NO : 21944

AS PPM	Ba PPM	Cd PPM	Cr PPM	Pb PPM	Hg PPM	Se PPM	Ag PPM
<0.010	<0.20	<0.05	<0.15	<0.65	<0.001	<0.010	<0.0004

POW 24-05-15-08

MISCELLANEOUS ACTIVITY DETERMINATION FOR ENVIRONMENTAL LLD COUNTS

SAMPLE DATE: 4-16-96 SAMPLE TIME: N/A

SAMPLE IDENTIFICATION: SAND FROM DRYING BED "C"

REASON FOR SAMPLE: Disposal

REQUESTED BY: D. Huffman EXT: 2803

SAMPLE RESULTS		
NUCLIDE	µCi/mL	REMARKS
	N/D	

RESULTS:

REPORTED BY: JBB

RECEIVED BY: D. Huffman (via telephone)

REMARKS:

ENVIRLLD.XLS

```
*    ***********************************************************************
                        North Anna Power Station
                 Analysis Report Generated 16-APR-1996 18:54:43.22
***********************************************************************
rchive File: SYS$SYSDEVICE:[USER.SCUSR.ARCHIVE]SAMPLE_ENVLLD_997.CNF:1
***********************************************************************

ample Title : SAND BED "C"

ample Date  : 16-APR-1996 17:54:00.      Analyzed By : DS
ample Identification : SAND BED "C"      Geometry : Liquid Marinelli
ample Quantity : 1.00000E+03             Units : mL

***********************************************************************
                                         *
cquire Date : 16-APR-1996 17:54:14       * Sensitivity : 5.00000
reset Live Time  : 0 01:00:00.00         * Iterations  : 10
lapsed Real Time : 0 01:00:00.71         * Gaussian : 20.00000
lapsed Live Time : 0 01:00:00.00         * Variable Peak Width : 3.00000
DC Deadtime      : 0.0%                  * Sample Decay Time :    0 00:00:14.32
                                         *
***********************************************************************
                                         *
etector   : Detector #4                  * Library : Effluent Master
nergy Cal : 16-APR-1996 14:57:05         * Energy Tolerance (KeV) : 1.50000
l    (KeV/Channel) : 1.00128E+00         * Half-Life Ratio : 8.00000
f    c (keV)       : 2.04099E-01         * Abundance Limit (%) : 80.00000
                                         *
***********************************************************************
```

ost-NID Peak Search Report

t	Energy	Area	Bkgnd	FWHM	Channel	Left	Pw	%Err	Fit	Nuclides
0	76.79	286	733	3.52	76.50	73	8	35.6		
0	185.60	133	571	2.11	185.19	181	9	67.2		
4	238.63	617	206	1.46	238.18	234	15	10.5	1.49E+00	PB-212
4	241.65	178	361	2.63	241.19	234	15	50.9		PB-214
0	269.97	58	225	1.54	269.50	267	6	89.7		
0	295.79	186	419	1.88	295.30	291	11	45.1		PB-214
0	338.55	117	232	1.72	338.04	334	8	49.2		
0	351.82	272	198	1.91	351.30	347	8	22.5		PB-214
0	510.79	180	166	2.38	510.21	505	12	34.7		TL-208
0	583.30	169	161	1.91	582.71	579	10	32.5		TL-208
0	609.02	232	125	1.60	608.43	603	10	23.2		
0	726.75	63	122	3.00	726.18	721	10	74.1		
0	911.53	160	83	2.28	911.06	908	9	25.9		
0	968.44	123	119	2.36	968.00	962	13	41.4		
0	20.74	67	48	1.56	1120.46	1118	7	46.1		
0	1460.29	2236	29	2.59	1460.51	1454	13	4.3		K-40
0	1728.97	8	8	2.50	1729.77	1724	9	121.5		
0	1762.76	46	6	2.19	1763.65	1758	12	40.8		

r ·ference Report

:o interference correction performed

Sample ID : SAND BED "C" Acquisition date : 16-APR-1996 17:54:14

Brief Report

Nuclide	Activity uCi/mL	2-Sigma Error
K-40	2.258E-05	9.813E-07
TL-208	9.868E-08	3.207E-08
PB-212	3.704E-07	3.889E-08
PB-214	2.504E-07	5.637E-08
Total Activity :	2.330E-05	

luclide Line Activity Report
e ID : SAND BED "C"

Acquisition date : 16-APR-1996 17:54:14

luclide Type: natural

uclide	Energy	Area	%Abn	%Eff	Uncorrected uCi/mL	Decay Corr uCi/mL	2-Sigma %Error
-40	1460.81	2236	10.67*	6.967E-01	2.258E-05	2.258E-05	4.35
L-208	277.35	------	6.80	6.967E+01	------	Line Not Found	------
	510.84	180	21.60	1.689E+00	3.707E-07	3.707E-07	34.69
	583.14	169	84.20*	1.528E+00	9.868E-08	9.868E-08	32.50
	860.37	------	12.46	1.528E+02	------	Line Not Found	------
B-212	238.63	617	44.60*	2.804E+00	3.704E-07	3.704E-07	10.50
	300.09	------	3.41	2.804E+02	------	Line Not Found	------
B-214	241.98	178	7.49	2.781E+00	6.398E-07	6.398E-07	50.93
	295.21	186	19.20	2.461E+00	2.961E-07	2.961E-07	45.15
	351.92	272	37.20*	2.193E+00	2.504E-07	2.504E-07	22.51

lag: "*" = Keyline

May 29, 1996

Mr. James W. Moore III, P.E.
Department of Health
Rockbridge Square Shopping Center
131 Walker Street
Lexington, VA 24450

Dear Mr. Moore:

RE: NORTH ANNA POWER STATION - STP SLUDGE DISPOSAL PLAN

Attached are the letters you requested, indicating acceptance by the wastewater treatment facilities of the sewage treatment plant sludge and wastewater from North Anna Power Station, in compliance with our Sludge Disposal Plan. Only those types of wastes identified in the attached letters from Louisa and Hanover Counties will be disposed of at the respective facilities. Also attached is a map of the routes to the two facilities.

If you have any questions please call me at (804) 273-2995.

Sincerely,

J. K. Puckett, P.E.

Attachments

bc: A. W. Hadder
W. R. Matthews - NAPS
W. A. Thornton - IN/2SE
D. A. Heacock - NAPS
A. H. Stafford - NAPS
K. N. Kappatos - ODEC w/attachment
P. A. Kemp - NAPS
A. C. Cooke - NAPS OK 5/29/96 JKP
H. L. Yowell - NAPS
E. J. Wheeler
J. W. White
Power Records Management - IN/GW w/attachment

BOARD OF SUPERVISORS

R.J. KLOTZ, JR., CHAIRMAN
HENRY DISTRICT

J.T. "JACK" WARD, VICE-CHAIRMAN
MECHANICSVILLE DISTRICT

TIMOTHY E. ERNST
ASHLAND DISTRICT

TOM GILES
CHICKAHOMINY DISTRICT

JOHN E. GORDON, JR.
SOUTH ANNA DISTRICT

AUBREY M. STANLEY, JR.
BEAVERDAM DISTRICT

ELTON J. WADE, SR.
COLD HARBOR DISTRICT

HANOVER COUNTY
P. O. BOX 470
HANOVER, VIRGINIA 23069-0470

JACK BERRY
COUNTY ADMINISTRATOR

RICHARD R. JOHNSON
DEPUTY COUNTY ADMINISTRATOR

STERLING E. RIVES, III
COUNTY ATTORNEY

NOTED MAY 20 1996 J.K.P.

May 15, 1996

Mr. J. K. Puckett, P.E.
Virginia Power
5000 Dominion Blvd.
Glen Allen, VA 23060

SUBJECT: NORTH ANNA POWER STATION

Dear Mr. Puckett:

Your request for wastewater disposal at the Harris Excavating discharge site has been approved by Hanover and Henrico Countys respectively, pending the following conditions:

- The discharge will be domestic wastewater only. Laboratory or Radioactive waste is prohibited.
- Grease trap waste will be recorded separately since the discharge rates are higher for grease.
- The vehicle control wash pit wastewater will be pumped from the solids. The solids must be disposed of elsewhere.
- Provide a letter stating that there is no cross contaminantion or no potential for the cross contamination of domestic, laboratory or radioactive wastes.

If you have any questions, please contact me at (804) 537-6020.

Sincerely,

DEPARTMENT OF PUBLIC UTILITIES

Glenn A. Smith
Utility Services Manager

/aml

LOUISA COUNTY WATER AUTHORITY
P.O. BOX 9
LOUISA, VIRGINIA 23093
(703) 967-1122

April 26, 1996

Mr. Hudson Yowell
North Anna Power Station
P. O. Box 402
Mineral, VA 23117

Dear Mr. Yowell:

This is to reaffirm our agreement that the Louisa County Water Authority will continue to accept domestic sewer waste from your station if the wastewater qualities remain within acceptable parameters and other requirements of delivery and payments are met.

If I can be of any further assistance please let me know.

H. Barlow Delk
General Manager

LOUISA CO
HANOVER CO
GOOCHLAND CO
HENRICO CO
ASHLAND
FREDERICKSBURG
MACLAUN
ROUTE
NEEDO
ONTMOR
KENTUCKY
FORT
MILITARY
PARKING
CAMPBELL
CHARLOTTE
CUMBERLAND
POWHATAN
CHESTERFIELD
CHARLES CITY
JAMES CITY
YORK
ESSEX
KING WILLIAM
KING QUEEN
GLOUCESTER
MATHEWS
MIDDLESEX
LANCASTER
NORTHUMBERLAND
WESTMORELAND
STAFFORD
SPOTSYLVANIA
ORANGE
GREENE
FLUVANNA
ALBEMARLE
NELSON
AMHERST
BEDFORD
CAMPBELL
PITTSYLVANIA
HALIFAX
MECKLENBURG
BRUNSWICK
DINWIDDIE
PRINCE GEORGE
SUSSEX
SURRY
ISLE OF WIGHT
NORFOLK
PORTSMOUTH
CHESAPEAKE
SUFFOLK
VIRGINIA BEACH
NORFOLK NAVAL BASE
NORFOLK INTERNATIONAL
NORFOLK
NEWPORT NEWS
HAMPTON
WILLIAMSBURG
JAMES RIVER
YORK RIVER
RAPPAHANNOCK RIVER
POTOMAC RIVER
CHESAPEAKE BAY
ATLANTIC OCEAN
ROANOKE
LYNCHBURG
CHARLOTTESVILLE
FARMVILLE
BLACKSTONE
EMPORIA
ROCKY MOUNT
SOUTH BOSTON
DANVILLE
MARTINSVILLE
BLUEFIELD
BIG STONE GAP
WISE
PRINCE EDWARD
CUMBERLAND
BUCKINGHAM
FLUVANNA
GOOCHLAND
POWHATAN
CHESTERFIELD
HENRICO
HANOVER
LOUISA
ORANGE
GREENE
ALBEMARLE
NELSON
AMHERST
BEDFORD
CAMPBELL
PITTSYLVANIA
HALIFAX
MECKLENBURG
BRUNSWICK
DINWIDDIE
PRINCE GEORGE
SUSSEX
SURRY
ISLE OF WIGHT
NORFOLK
PORTSMOUTH
CHESAPEAKE
SUFFOLK
VIRGINIA BEACH
NORFOLK NAVAL BASE
NORFOLK INTERNATIONAL
NORFOLK
NEWPORT NEWS
HAMPTON
WILLIAMSBURG
JAMES RIVER
YORK RIVER
RAPPAHANNOCK RIVER
POTOMAC RIVER
CHESAPEAKE BAY
ATLANTIC OCEAN
ROANOKE
LYNCHBURG
CHARLOTTESVILLE
FARMVILLE
BLACKSTONE
EMPORIA
ROCKY MOUNT
SOUTH BOSTON
DANVILLE
MARTINSVILLE
BLUEFIELD
BIG STONE GAP
WISE
PRINCE EDWARD
CUMBERLAND
BUCKINGHAM

NOTED JUN 13 1996 J.K.P.

COMMONWEALTH of VIRGINIA

DEPARTMENT OF ENVIRONMENTAL QUALITY

Valley Regional Office

George Allen
Governor

Thomas L. Hopkins
Director

Street Address: 116 North Main Street, Bridgewater, Virginia 22812
Mailing Address: P.O. Box 268, Bridgewater, Virginia 22812
Fax (540)828-4016

Becky Norton Dunlop
Secretary of Natural Resources

R. Bradley Chewning, P.E.
Valley Regional Director
(540)828-2595

Mr. J. W. White, Director
Environmental Compliance - Water/Waste
Virginia Power
Innsbrook Technical Center
5000 Dominion Blvd.
Glen Allen, VA 23060

Re: Sludge Disposal Plan for the North Anna Power Station Sewage Treatment Plants, Louisa County

Dear Mr. White:

The referenced sludge management plan is approved. This action is in accordance with the enclosed memorandum dated June 10, 1996 and a letter from the Virginia Department of Health recommending approval of this project.

The Department of Environmental Quality approval does not relieve you of your responsibility to:

1. operate the facility in a manner to consistently meet the facility's performance requirements,

2. correct design and/or operation deficiencies, or

3. comply with all other applicable laws and regulations.

If you have any questions, please contact Janardan R. Pandey of this office.

Sincerely,

Donald G. Kain

Donald G. Kain
Water Permits Manager

ıg
Enclosure
cc: Mr. Glenn A. Smith, County of Hanover
Mr. H. Barlow Delk, Louisa County Water Authority
VDH - Lexington

MEMORANDUM
DEPARTMENT OF ENVIRONMENTAL QUALITY
VALLEY REGIONAL OFFICE

116 N. Main St. - P.O. Box 268 Bridgewater, VA 22812

SUBJECT: Sludge Management Plan

TO: Water Permits Manager

FROM: Janardan R. Pandey Janardan Raj

DATE: June 10, 1996

COPIES: VPDES Correspondence File
Mr. Glenn A. Smith, County of Hanover
Mr. H. Barlow Delk, Louisa County Water Authority
VDH - Lexington

Project Name: Sludge Disposal Plan for the North Anna Power Station Sewage Treatment Plants

Project Owner: Virginia Power

Project Scope: Pump and haul of liquid sludge for transport to an approved municipal wastewater treatment works capable of handling liquid sludge.

Previous Agency Action: VPDES Permit No. VA0052451 was reissued on October 2, 1995.

Virginia Department of Health Action: By letter dated June 5, 1996, the Virginia Department of Health recommended approval of the Sludge Management Plan.

STAFF RECOMMENDATIONS:

The staff recommends that the Sludge Management Plan be approved.

bg

- JWW
... FILE

NAPS / ENV 42 / Sewage Treatment

COMMONWEALTH of VIRGINIA

RANDOLPH L. GORDON, M.D., M.P.H.
State Health Commissioner

Department of Health
Office of Water Programs
Environmental Engineering Field Office

ROCKBRIDGE SQUARE SHOPPING CENTER
131 WALKER STREET
LEXINGTON, VIRGINIA 24450-2431
PHONE: (540) 463-7136
FAX: (540) 463-3892

June 5, 1996 NOTED JUN 10 1996 J.K.P.

SUBJECT: Louisa County
Sewerage - North Anna Power Station

Mr. R. Bradley Chewning, P.E., Regional Director
Department of Environmental Quality
Water Regional Office
P.O. Box 268
Bridgewater, VA 22812

Dear Mr. Chewning:

A sludge management plan for Virginia Power's North Anna Power Station wastewater treatment works, located in Louisa County, as prepared by Virginia Power, has been received by this Department. The sludge management plan is titled "Sludge Disposal Plan for the North Anna Power Station Sewage Treatment Plants" and is dated received December 18, 1995.

The North Anna Power Station is served by one main 30,000 gpd and three smaller (two at 10,000 gpd and one at 20,000 gpd) extended aeration package wastewater treatment plants. Each plant is provided with sludge holding tanks with sand drying beds located at the main treatment works. The proposed method of sludge handling is to pump liquid sludge from the sludge holding tanks of each respective treatment works for transport to an approved municipal wastewater treatment works capable of handling liquid sludge. The plan includes the Louisa regional wastewater treatment works and the Hanover wastewater treatment works. Pump and haul services are under contract with Stamie E. Lyttle Company in Richmond. This company is permitted by the Richmond Health Department.

The review of this sludge management plan has been confined to technical requirements and design criteria as stipulated in the Commonwealth of Virginia *Sewerage Regulations.*

In accordance with the Virginia Water Control Law, *Code of Virginia* 1950, as amended, Title 62.1, Chapter 3.1, Article 4, Section 62.1-44.19, Paragraph 3, this letter report is to advise that the previously mentioned sludge management plan is technically adequate and is recommended for approval by this Department.

SUBJECT: Louisa County
Sewerage - North Anna Power Station

Final approval or any further action or decision is a matter for your office.

This office is forwarding, along with a copy of this letter, one (1) copy of the previously described sludge management plan with a State Health Department sticker indicating approval, to Virginia Power. An additional copy is enclosed for your use.

Notification of Department of Environmental Quality action should be transmitted to the owner, Mr. J. W. White, Director, Environmental Compliance-Water/Waste, Virginia Power, Innsbrook Technical Center, 5000 Dominion Boulevard, Glen Allen, VA 23060; with copies to Mr. Glenn A. Smith, Utilities Services Manager, County of Hanover, P.O. Box 470, Hanover, VA 23089; Mr. H. Barlow Delk, General Manager, Louisa County Water Authority, P.O. Box 9, Louisa, VA 23093; and this Office.

Enclosed are copies of the letters of transmittal dated December 14, 1995 and May 29, 1996 for your information.

By direction of the State Health Commissioner.

Sincerely,

ORIGINAL SIGNED BY:
Douglas M. Caldwell, P.E.

for Ronald E. Conner, P.E.
Engineering Field Director

JWM/mep
cc Virginia Power - Attn: Mr. J. W. White ✓
Louisa County Water Authority - Attn: Mr. H. Barlow Delk
Hanover County Department of Public Utilities - Attn: Mr. Glenn A. Smith
Louisa County Health Department - Attn: Dr. Susan McLeod
VDH - Richmond Central

DEC 1995
RECEIVED
OFFICE OF
WATER PROGRAMS
FIELD OFFICE -
LEXINGTON

SLUDGE DISPOSAL PLAN FOR NORTH ANNA POWER STATION SEWAGE TREATMENT PLANTS

General Description

North Anna Power Station is served by one large extended aeration package sewage treatment plant having a capacity of 30,000 gpd and three smaller package plants with capacities of (2) @ 10,000 gpd and one @ 20,000 gpd. One 10,000 gpd plant is set up next to the 20,000 gpd plant. These plants treat the same influent and they have a common discharge point. Normally, only one of these plants is in operation at a time. The main sewage plant is the only one which handles sewage from inside the restricted power station area, ie; the only plant which could receive radioactively contaminated sewage.

Aerated Sludge Holding Tanks

The ma
a capa
sludge
plants
aerate
diffus

Quanti

Approx
sludge
1,000
gallon
gallon
and ir
wastin

Sludg

Prior
treat
free
mater
dispo
Commi
facil
those
shoul
would
healt
noted

Liqui
sludg
be pr
appro

COMMONWEALTH OF VIRGINIA
Department of Health
Office of Water Programs
Lexington Field Office

( ) Plans & Specifications
( ) Operations & Maintenance Manual
( ) Addendum
( ) Change Order
( ) Revised Plan Sheet(s)
( ) Revised Specification Sheet(s)
(✓) Sludge Management Plan

(✓) Approved
( ) Conditionally Approved
( ) Disapproved

6/5/96
Date

Douglas M. Caldwell
Engineering Field Director for REC

DEC 1995
RECEIVED
OFFICE OF
FIELD OFFICE-
LEXINGTON

SLUDGE DISPOSAL PLAN FOR NORTH ANNA POWER STATION SEWAGE TREATMENT PLANTS

General Description

North Anna Power Station is served by one large extended aeration package sewage treatment plant having a capacity of 30,000 gpd and three smaller package plants with capacities of (2) @ 10,000 gpd and one @ 20,000 gpd. One 10,000 gpd plant is set up next to the 20,000 gpd plant. These plants treat the same influent and they have a common discharge point. Normally, only one of these plants is in operation at a time. The main sewage plant is the only one which handles sewage from inside the restricted power station area, ie; the only plant which could receive radioactively contaminated sewage.

Aerated Sludge Holding Tanks

The main sewage treatment plant has two sludge holding tanks with a capacity of 2,100 gallons each. The 20,000 gpd plant has a sludge holding tank which will hold 1,800 gallons and the two small plants will hold 1,200 gallons each. In all cases, sludge is aerated by diffused air supplied by an air drop pipe and two diffusers in each tank.

Quantity and Quality of Sludge Wasted

Approximately five days per week, sludge is wasted to the aerated sludge holding tanks. The volume of the sludge wasted ranges from 1,000 - 5,000 gallons per week for the main plant, 1,000 to 3,000 gallons per week for the 10,000/20,000 gpd plant and 25 to 75 gallons per week for the other 10,000 gpd plant. Visual inspection and internal process monitoring by the operator will determine when wasting must be accomplished.

Sludge Removal and Handling

Prior to the disposal of liquid sludge from the main sewage treatment plant, the waste will be analyzed to determine if it is free of radioactive material. Liquid sludge containing radioactive material will be wasted to the drying beds and will be handled and disposed of under the regulatory control of the Nuclear Regulatory Commission at an out of state, licensed radioactive waste disposal facility. The NRC requirements are inherently more strict than those for handling and disposal of conventional sewage sludge and should provide assurances to the Virginia agencies that such sludge would be properly disposed without detrimental impacts to human health or the environment. The exact day of sludge wasting will be noted in plant records.

Liquid sludge from the three smaller package plants and liquid sludge from the main plant with no radioactive contamination would be pumped from the STP's to a tank truck operated by a properly approved and licensed contractor, and transported directly to a

septage receiving facility capable of, and licensed or permitted for, adequate treatment of the liquid sludge.

During the transfer of sludge from the holding tank, special care would be taken to ensure that an overfill does not occur. A full-time, on-site operator is dedicated to the STP with the requirements that all pump and haul activities be coordinated through him and subject to his approval and immediate oversight. In the unlikely event of an on-site spill, the station is prepared to provide localized containment and disinfection using absorbent material and liquid sodium hypochlorite.

Only those licensed pump and haul vendors and associated off-site treatment facilities approved by the State will be utilized. The vendor shall be responsible for obtaining all the necessary sludge handling and disposal permits, and providing verification of such permits to the on-site operator.

BOARD OF SUPERVISORS

R.J. KLOTZ, JR., CHAIRMAN
HENRY DISTRICT

J.T. "JACK" WARD, VICE-CHAIRMAN
MECHANICSVILLE DISTRICT

TIMOTHY E. ERNST
ASHLAND DISTRICT

TOM GILES
CHICKAHOMINY DISTRICT

JOHN E. GORDON, JR.
SOUTH ANNA DISTRICT

AUBREY M. STANLEY, JR.
BEAVERDAM DISTRICT

ELTON J. WADE, SR.
COLD HARBOR DISTRICT

HANOVER COUNTY
P. O. BOX 470
HANOVER, VIRGINIA 23069-0470

JACK BERRY
COUNTY ADMINISTRATOR

RICHARD R. JOHNSON
DEPUTY COUNTY ADMINISTRATOR

STERLING E. RIVES, III
COUNTY ATTORNEY

NOTED MAY 20 1996 J.K.P.

May 15, 1996

Mr. J. K. Puckett, P.E.
Virginia Power
5000 Dominion Blvd.
Glen Allen, VA 23060

SUBJECT: NORTH ANNA POWER STATION

Dear Mr. Puckett:

Your request for wastewater disposal at the Harris Excavating discharge site has been approved by Hanover and Henrico Countys respectively, pending the following conditions:

- The discharge will be domestic wastewater only. Laboratory or Radioactive waste is prohibited.
- Grease trap waste will be recorded separately since the discharge rates are higher for grease.
- The vehicle control wash pit wastewater will be pumped from the solids. The solids must be disposed of elsewhere.
- Provide a letter stating that there is no cross contaminantion or no potential for the cross contamination of domestic, laboratory or radioactive wastes.

If you have any questions, please contact me at (804) 537-6020.

Sincerely,

DEPARTMENT OF PUBLIC UTILITIES

Glenn A. Smith
Utility Services Manager

/aml

LOUISA COUNTY WATER AUTHORITY
P.O. BOX 9
LOUISA, VIRGINIA 23093
(703) 967-1122

April 26, 1996

Mr. Hudson Yowell
North Anna Power Station
P. O. Box 402
Mineral, VA 23117

Dear Mr. Yowell:

This is to reaffirm our agreement that the Louisa County Water Authority will continue to accept domestic sewer waste from your station if the wastewater qualities remain within acceptable parameters and other requirements of delivery and payments are met.

If I can be of any further assistance please let me know.

H. Barlow Delk
General Manager

SELCO

STAMIE E. LYTTLE CO., INC.

2210 Belt Blvd. at Hopkins Rd. • P.O. Box 24205 • Richmond, Virginia 23224 • Phone 232-6774

August 2, 1994

Mr. Kenny Williamson
Chemistry Department
Virginia Power Company
North Anna Power Station
Post Office Box 402
Mineral, Virginia 23117

Dear Kenny:

Per your request, the following is the route our trucks take when discharging from North Anna:

1. From Virginia Power to Treatment Plant (Louisa), take main road, Rt. 700, right on Rt. 618, right on Rt. 208, left on Rt. 33, right on Pine Ridge Road

2. From Treatment Plant to Dump Site (Louisa), left on Rt. 33, right on Rt. 208, right on Rt. 780, right on rt. 781 to manhole

3. From Virginia Power to Hanover Dump, take main road to Rt. 700 to left on Rt. 522, to Rt. 33, left – ½ mile – right on Rt. 522 to 64 East, 295 South to Rt. 301 (Rt. 2) south to Richfood Road, left on Old Richfood

Please call if you have further questions.

Sincerely,

STAMIE E. LYTTLE CO., INC.

Buck Accashian
Manager – Service Department

BA/srd

94-0621.sel

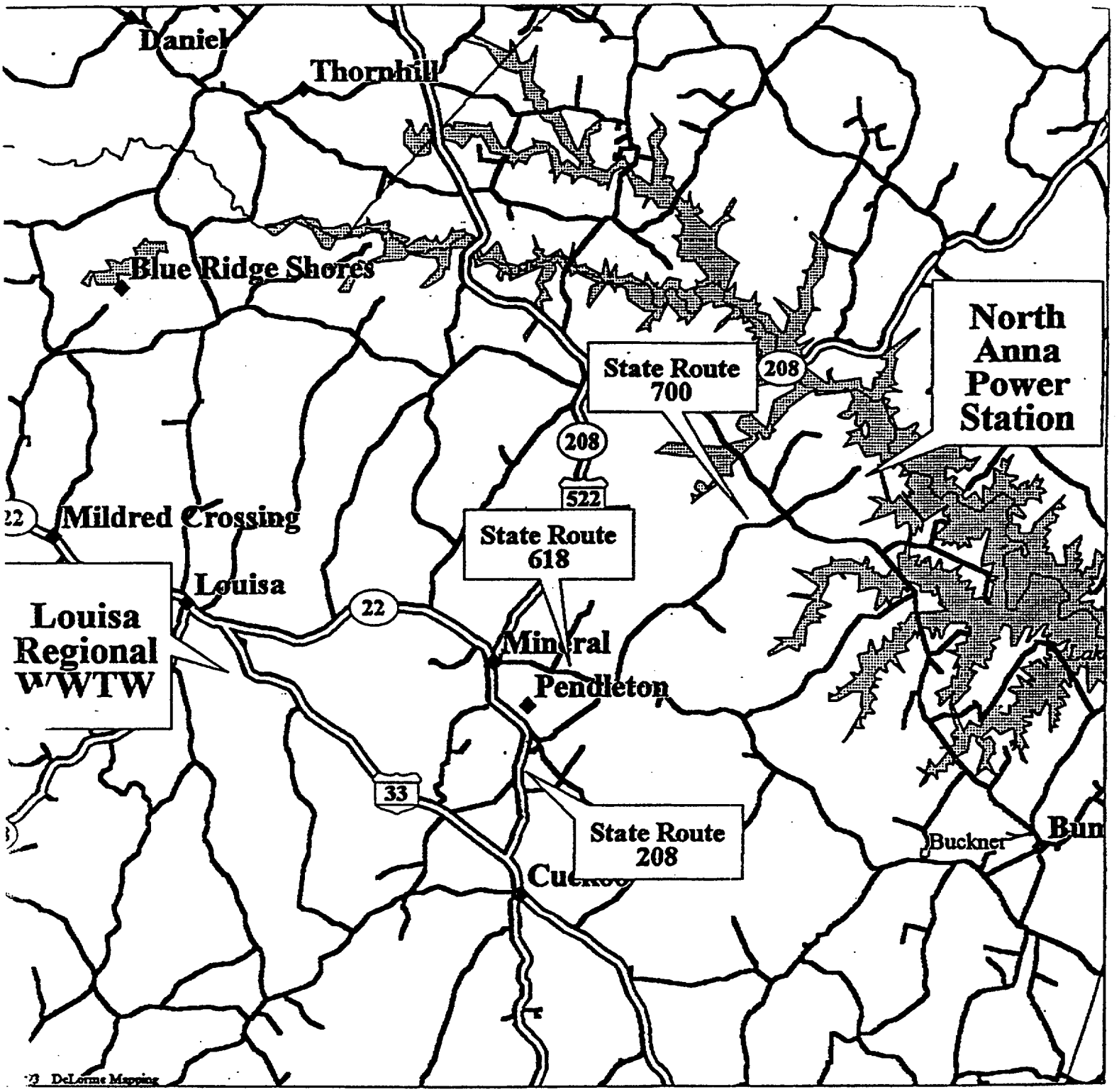

GEND

- State Route
- Geo Feature
- Town, Small City
- S Highway
- unty Boundary
- Population Center
- Major Street/Road
- Interstate Highway
- State Route
- Open Water

Scale 1:150,000 (at center)

2 Miles

5 KM

Mag 11.00
Mon Jun 03 10:03:10 1996

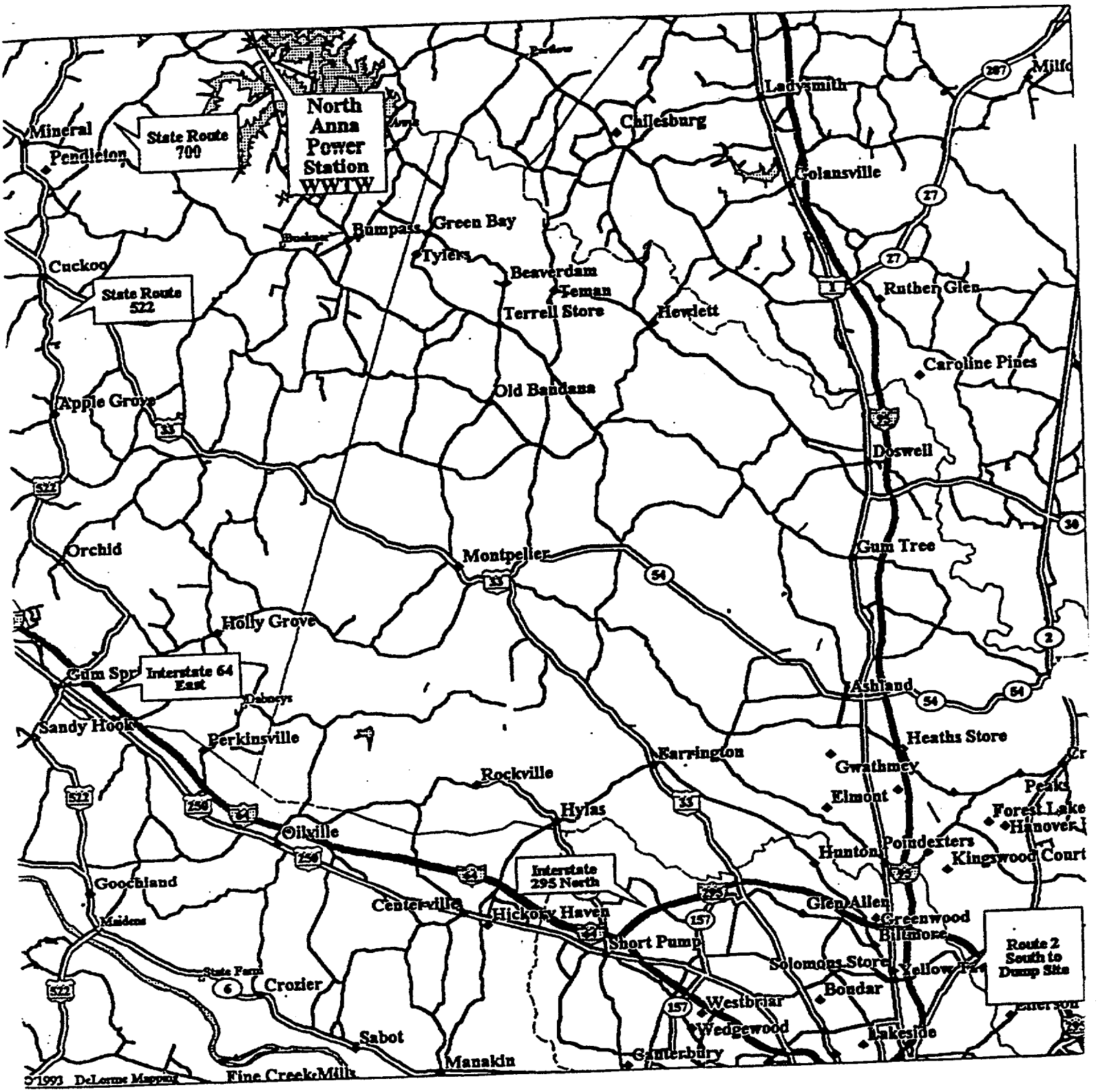

LEGEND

- State Route
- Geo Feature
- Town, Small City
- Interstate, Turnpike
- US Highway
- County Boundary
- Population Center
- Major Street/Road
- Airfield
- Land Mass
- Open Water

Scale 1:250,000 (at center)

5 Miles

5 KM

Mag 11.00
Mon Jun 03 12:27:34 1996

REPORT NO. PR012B05 DOMINION RESOURCES, INC. 06.28.54 04/23/95

REQUISITIONER'S BLANKET ORDER REPORT
COMPANY 0001
VIRGINIA ELECTRIC AND POWER COMPANY REC'D./ APR 24 1995 S.L.H.

BLANKET ORDER NUMBER BNT 460661 REVISION 001 BLANKET TYPE PA

VENDOR: 122552002 STANIE E LYTTLE CO INC
2210 E BELT BLVD
PO BOX 24205
RICHMOND VA 23224

RC: 0 SHIP TO: 001056 NORTH ANNA POWER STATION
VIRGINIA POWER STRM 8500
WAREHOUSE 5, ROUTE 700
MINERAL, VA 23117

RC: 0 TAX MESSAGE: N/T VA DIRECT PMT PERMIT 998106

RC: 0 PAYMENT TERMS: SEE BELOW
RC: 0 F.O.B.: SEE BELOW
RC: 0 SHIP VIA: SEE BELOW
RC: 0 FREIGHT CODE: 002 OTHER, SEE BELOW
RC: 0 REFER TO: E. K. DOWNER
AREA OF RESPONSIBILITY: 120 NUCLEAR PURCHASING
RC: 0 BUYER: 139 E. A. RAWLS PHONE: 804-273-

RC: 0 HEADER DESCRIPTION: SUPPRESS

REVISION 1 IS ISSUED AGAINST R8518-	Y
00036707	Y
	Y
	Y
	N
REVISION 1 IS HEREBY ISSUED TO EXERCISE	N
THE EXTENTION OPTION NOTED IN SECTION C	N
OF THIS ORDER. THE EXTENTION SHALL	N
COMMENCE MAY 1,1995 AND EXPIRE APRIL	N
30,1996.	N
	N
THE RATES NOTED IN THE COMPENSATION	N
SECTION OF THIS ORDER SHALL REMAIN FIRM	N
THROUGH APRIL 30, 1996.	N
	N
THE PURCHASE ORDER TOTAL VALUE REMAINS	N
UNCHANGED.	N
	N
	N
	N
	Y
ORIGINAL ORDER FOLLOWS:	Y
	Y
M/R : 8518-00025758	Y
QA CODE : NS	Y
STRG LVL: B	Y
	Y
SUPERSEDES ORDER NO: BNS 426103	Y
RELEASES ISSUED BY: SEE SECTION B	Y
	Y
	Y
A: SCOPE OF WORK	Y
	Y
PROVIDE THE SEWAGE REMOVAL SERVICES	Y
DESCRIBED HEREIN IN ACCORDANCE WITH:	Y
	Y

REQUISITIONER'S BLANKET ORDER REPORT
COMPANY 0001
VIRGINIA ELECTRIC AND POWER COMPANY

BLANKET ORDER NUMBER BNT 460661 REVISION 001 BLANKET TYPE PA

RC: 0 HEADER DESCRIPTION:

SUPPRESS

ATTACHMENT IA Y
GENERAL TERMS AND CONDITIONS - Y
GENERAL SERVICES, DATED 1/1/94. Y

ATTACHMENT IB Y
SUPPLEMENTAL TERMS AND CONDITIONS FOR Y
NUCLEAR SITE SERVICES, DATED 1/1/94. Y

AND THE SPECIAL TERMS AND CONDITIONS Y
CONTAINED HEREIN. THE TERMS AND Y
CONDITIONS PREPRINTED ON THE REVERSE Y
SIDE HEREOF DO NOT APPLY. Y

THIS BLANKET ORDER IS TO ESTABLISH THE Y
PRICING, TERMS, AND CONDITIONS FOR Y
PURCHASING THE SERVICES DESCRIBED HEREIN Y
WITHOUT IT BEING A COMMITMENT TO Y
PURCHASE ANY OF THE INCLUDED SERVICES Y
FROM THE SUPPLIER. NO MINIMUM PAYMENT Y
SHALL BE DUE THE SUPPLIER UNDER THIS Y
BLANKET ORDER AND THE COMPANY RESERVES Y
THE RIGHT TO OBTAIN THESE SAME SERVICES Y
FROM OTHER SUPPLIERS. Y

INDIVIDUAL RELEASES ISSUED IN ACCORDANCE Y
WITH THE PROVISIONS OF SECTION C OF THIS Y
ORDER WILL BE THE METHOD OF COMMITTING Y
PURCHASES FROM THE SUPPLIER. ALL Y
PROVISIONS OF THIS BLANKET ORDER, Y
COMMERCIAL, TECHNICAL, AND QUALITY Y
RELATED, SHALL APPLY TO EACH RELEASE Y
ISSUED. Y

THE SERVICES THAT THE SUPPLIER IS Y
AUTHORIZED TO PROVIDE UNDER THIS BLANKET Y
ORDER ARE LIMITED TO THOSE DESCRIBED Y
HEREIN. NO SUBSTITUTIONS OR ADDITIONS Y
ARE TO BE PROVIDED WITHOUT A WRITTEN Y
REVISION TO THIS BLANKET ORDER. Y

NO PERMANENT EQUIPMENT OR REPLACEMENT Y
PARTS ARE TO BE PROVIDED AS PART OF A Y
REQUEST FOR SERVICES UNDER THIS BLANKET Y
ORDER. Y
Y
Y
Y
N

REQUISITIONER'S BLANKET ORDER REPORT
COMPANY 0001
VIRGINIA ELECTRIC AND POWER COMPANY

BLANKET ORDER NUMBER BNT 460661 REVISION 001 BLANKET TYPE PA

RC: 0 HEADER DESCRIPTION: SUPPRESS

B: METHOD OF ORDER RELEASE

THIS IS A USER RELEASE BLANKET ORDER.

AUTHORITY TO AUTHORIZE SERVICES IS LIMITED TO THE COMPANY'S PURCHASING PERSONNEL AND THE INDIVIDUALS NAMED BELOW. THE SUPPLIER IS AUTHORIZED TO PROVIDE SERVICES BASED UPON ORAL REQUEST AND NO CONFIRMING DOCUMENTATION MUST BE ISSUED. ANY SERVICES PROVIDED AT THE DIRECTION OF UNAUTHORIZED PERSONNEL SHALL BE DONE AT THE SUPPLIER'S SOLE RISK.

THE FOLLOWING OPERATIONS PERSONNEL ARE AUTHORIZED TO RELEASE THE SUPPLIER TO PROVIDE SERVICES UNDER THIS BLANKET ORDER:

E. K. DOWNER	703/894-2805
M. R. BOATWRIGHT	2805
S. L. GRAMLING	2801
C. R. HENSON	2802

THIS AUTHORIZATION SHALL NOT BE CONSTRUED BY THE SUPPLIER TO CONFER UPON THESE PERSONNEL ANY ACTUAL OR APPARENT AUTHORITY TO ACT AS AN AGENT FOR THE COMPANY EXCEPT TO ISSUE SAID RELEASES CONSISTENT WITH THE TERMS OF THIS BLANKET ORDER. THESE PERSONNEL SHALL HAVE NO AUTHORITY TO AMEND, ALTER OR OTHERWISE MODIFY THE SCOPE OF WORK OR ANY OF THE TERMS AND CONDITIONS OF THIS BLANKET ORDER.

SUPPLIER'S PRIMARY CONTACT FOR SERVICES REQUESTED UNDER THIS ORDER IS MR. BUCK ACCASHIAN WHO MAY BE CONTACTED AT (804) 232-6774.

C: TERM OF AGREEMENT

THIS BLANKET ORDER SHALL BE EFFECTIVE ON MAY 1, 1994, AND SHALL EXPIRE ON

REQUISITIONER'S BLANKET ORDER REPORT
COMPANY 0001
VIRGINIA ELECTRIC AND POWER COMPANY

BLANKET ORDER NUMBER BNT 460661 REVISION 001 BLANKET TYPE PA

		SUPPRESS
: 0	HEADER DESCRIPTION:	Y
	APRIL 30, 1995. COMPANY MAY, AT ITS SOLE	Y
	DISCRETION, EXTEND THE TERM OF THIS	Y
	ORDER FOR TWO ADDITIONAL TERMS OF ONE	Y
	YEAR EACH. ANY SUCH EXTENSION SHALL BE	Y
	AUTHORIZED BY WRITTEN REVISION TO THIS	Y
	ORDER.	Y
		Y
	IF WORK IS IN PROGRESS OR AUTHORIZED TO	Y
	BE PERFORMED UNDER ANY RELEASES ISSUED	Y
	PRIOR TO THE EXPIRATION DATE, THEN THIS	Y
	ORDER SHALL BE AUTOMATICALLY EXTENDED	Y
	FOR SUCH RELEASES, WITHOUT ISSUANCE OF A	Y
	WRITTEN REVISION, UNTIL THE WORK	Y
	AUTHORIZED THEREUNDER IS COMPLETE.	Y
		Y
	D: FREIGHT TERMS	Y
		Y
	SINCE NO MATERIALS ARE TO BE PROVIDED BY	Y
	THE SUPPLIER UNDER THE TERMS OF THIS	Y
	ORDER, FREIGHT TERMS ARE NOT APPLICABLE.	Y
		Y
	E: TERMS OF PAYMENT	Y
		Y
	ONE HUNDRED PERCENT (100%) BILLABLE UPON	Y
	COMPLETION OF EACH AUTHORIZED SERVICE	Y
	PROVIDING IT CONFORMS TO THE TERMS OF	Y
	THIS BLANKET ORDER. PAYMENT SHALL BE	Y
	MADE BY CHECK AND MAILED THIRTY (30)	Y
	DAYS AFTER RECEIPT OF AN ACCEPTABLE	Y
	INVOICE BY THE COMPANY.	Y
		Y
	ALL DOCUMENTATION REQUIRED TO SUPPORT	Y
	THE COMPENSABLE EXPENSES, TIME SHEETS,	Y
	EXPENSES REPORTS, TRAVEL RECEIPTS, PRICE	Y
	SHEETS, SUBSUPPLIER INVOICES, ETC.,	Y
	MUST BE SUBMITTED WITH THE RESPECTIVE	Y
	INVOICE.	Y
		Y
	F: SALES AND USE TAXES	Y
		Y
	VIRGINIA SALES AND USE TAXES ARE NOT TO	Y
	BE INCLUDED IN THE PRICE FOR ANY GOODS	Y
	AND MATERIALS PURCHASED HEREUNDER AND	Y
	SUPPLIER SHALL NOT PAY ANY VIRGINIA	Y
	SALES OR USE TAXES. THE COMPANY, UPON	Y
	REQUEST, WILL FURNISH SUPPLIER WITH	Y
	EVIDENCE OF EXEMPTION FROM SUCH TAXES	Y
	ACCEPTABLE TO THE TAXING AUTHORITIES.	Y

REQUISITIONER'S BLANKET ORDER REPORT
COMPANY 0001
VIRGINIA ELECTRIC AND POWER COMPANY

BLANKET ORDER NUMBER BNT 460661 REVISION 001 BLANKET TYPE PA

RC: 0 HEADER DESCRIPTION:	SUPPRESS
WITH EXCEPTION OF VIRGINIA SALES AND USE	Y
TAXES, PRICES MUST INCLUDE ALL	Y
APPLICABLE TAXES	Y
	Y
	Y
G: QUALITY ASSURANCE	Y
	Y
ALL SERVICES PROVIDED ON-SITE AT THE	Y
POWER STATION SHALL BE PERFORMED IN	Y
ACCORDANCE WITH AND UNDER THE POWER	Y
STATION'S QUALITY ASSURANCE PROGRAM AND	Y
WILL BE SUBJECT TO REVIEW BY THE	Y
COMPANY'S QUALITY ASSURANCE PERSONNEL.	Y
	Y
ALL SERVICES PROVIDED OFF-SITE SHALL BE	Y
PERFORMED UNDER THE SUPPLIER'S	Y
APPROPRIATE QUALITY ASSURANCE PROGRAM.	Y
	Y
	Y
H: JOBSITE REQUIREMENTS	Y
	Y
THE SUPPLIER'S PERSONNEL SHALL REPORT TO	Y
AND DIRECT ALL JOBSITE/WORK RELATED	Y
QUESTIONS TO THE COMPANY'S JOBSITE	Y
REPRESENTATIVE DESIGNATED AT THE TIME	Y
THE SERVICES ARE REQUESTED.	Y
	Y
ESCORTED ACCESS IS REQUIRED. THE	Y
SUPPLIER'S PERSONNEL SHALL REMAIN WITH	Y
THEIR DESIGNATED ESCORT AT ALL TIMES	Y
WHILE THEY ARE WITHIN THE SECURED AREA.	Y
	Y
I: INSURANCE	Y
	Y
THE SUPPLIER SHALL OBTAIN AND MAINTAIN	Y
THROUGHOUT THE LIFE OF THIS ORDER,	Y
INSURANCE THAT MEETS OR EXCEEDS THE	Y
LIMITS SPECIFIED IN THE GENERAL TERMS	Y
AND CONDITIONS. CERTIFICATE EVIDENCING	Y
THIS COVERAGE, INDUSTRY ACCORD FORM 25	Y
OR OTHER FORMS ACCEPTABLE TO THE COMPANY	Y
IS TO BE PROVIDED BY THE SUPPLIER.	Y
	Y
J: CORRESPONDENCE	Y
	Y
ALL CORRESPONDENCE ON COMMERCIAL OR	Y
CONTRACTUAL CONSIDERATIONS, INCLUDING	Y
BUT NOT LIMITED TO NOTICES, CHANGES,	Y
PRICING, CLAIMS, ETC., RELATIVE TO THIS	Y

REQUISITIONER'S BLANKET ORDER REPORT
COMPANY 0001
VIRGINIA ELECTRIC AND POWER COMPANY

BLANKET ORDER NUMBER BNT 460661 REVISION 001 BLANKET TYPE PA

RC: 0 HEADER DESCRIPTION:	SUPPRESS
ORDER SHALL BE DIRECTED TO THE ORDER	Y
ADMINISTRATOR AND ADDRESSED TO:	Y
	Y
MR A. J. TREECE	Y
SUPERVISOR PURCHASING	Y
VIRGINIA POWER	Y
5000 DOMINION BLVD	Y
GLEN ALLEN, VA 23060	Y
ATTN: MR D. R. SMITH	Y
804/273-2417	Y
	Y
ALL CORRESPONDENCE RELATIVE TO TECHNICAL	Y
MATTERS OR THE SPECIFICALLY AUTHORIZED	Y
SERVICES, INCLUDING BUT NOT LIMITED TO	Y
THE SUBMITTAL OF TECHNICAL DATA,	Y
REPORTS, ETC., SHALL BE DIRECTED TO THE	Y
TECHNICAL REPRESENTATIVE AND ADDRESSED	Y
TO:	Y
	Y
VIRGINIA POWER	Y
NORTH ANNA POWER STATION	Y
P. O. BOX 402	Y
MINERAL, VA 23117	Y
ATTN: MS. E. K. DOWNER	Y
(703) 894-2805	Y
	Y
A COPY OF EACH TECHNICAL CORRESPONDENCE,	Y
WITHOUT ATTACHMENTS, IS TO BE SENT TO	Y
THE ORDER ADMINISTRATOR NOTED ABOVE.	Y
	Y
K. JOINT OWNERSHIP	Y
	Y
++19 NEXT 20 LINES ****BUYERS-MESSAGE***	Y
OLD DOMINION ELECTRIC COOPERATIVE (OLD	N
DOMINION), A VIRGINIA GENERATION AND	N
TRANSMISSION COOPERATIVE, OWNS APPROXI-	N
MATELY 11.6% OF THE NORTH ANNA POWER	N
STATION (NORTH ANNA). OLD DOMINION IS	N
A PARTY TO THIS PURCHASE ORDER TO THE	N
EXTENT THAT THIS PURCHASE ORDER RELATES	N
TO NORTH ANNA. OLD DOMINION HAS APPOIN-	N
TED BUYER TO BE ITS AGENT FOR ALL AC-	N
TIONS RELATING TO ITS INTEREST IN NORTH	N
ANNA. ACCORDINGLY, SUPPLIER SHALL LOOK	N
SOLELY TO BUYER FOR PAYMENT, AND IT WILL	N
BE BUYER'S RESPONSIBILITY TO COLLECT RE-	N
IMBURSEMENT FROM OLD DOMINION FOR OLD	N
DOMINION'S PROPORTIONATE SHARE OF PAY-	N
MENTS UNDER THIS AGREEMENT. ALL MATTERS	N

REQUISITIONER'S BLANKET ORDER REPORT
COMPANY 0001
VIRGINIA ELECTRIC AND POWER COMPANY

BLANKET ORDER NUMBER BNT 460661 REVISION 001 BLANKET TYPE PA

RC: 0 HEADER DESCRIPTION: SUPPRESS
OF CONTRACT ADMINISTRATION WILL BE HAN- N
DLED BY BUYER. N
********** N
++19-LAST-20-LINES-****BUYERS-MESSAGE*** Y
N
N
L: ACCEPTANCE N
N
THE SUPPLIER SHALL ACKNOWLEDGE N
ACCEPTANCE OF THIS ORDER BY RETURNING N
THE SIGNED ACCEPTANCE COPY TO THE ORDER N
ADMINISTRATOR NOT LATER THAN MAY 2,1995. N
N
Y
Y

MESSAGES: DESCRIPTION
RC: 0 PA THE FIELD ACCOUNTING SERVICES DEPART-
MENT WILL CREATE ALL BLANKET RE-
LEASES FOR THIS ORDER. THIS WILL BE
BASED ON RECEIPT OF AN INVOICE AND ALL
SUPPORTING DOCUMENTATION. THIS IS AN
ACCOUNTING RELEASE BLANKET PURCHASE
ORDER.
****

BLANKET DOLLAR LIMIT: 100000 DOLLAR LIMIT PER RELEASE: 100000
MAX NO OF RELEASES: 999 EXPIRE DATE: 043095

NO.	QUANTITY REQUIRED	UNIT	STOCK NUMBER RC: 0	DETAIL DESCRIPTION RC: 0	SUPPRESS PRINT	UNIT PRICE RC: 0	E
0001	1.0000	LT	8512	SUPPLIER SHALL PROVIDE PERSONNEL AND EQUIPMENT TO REMOVE AND PROPERLY DISPOSE OF SEWAGE FORM NORTH ANNA POWER STATION. SUCH REMOVAL SHALL INCLUDE, BUT NOT BE LIMITED TO, THE FOLLOWING AREAS; TREATMENT PLANTS 005, 006, 007, 008 AND 011; SNUBBER SHOP, DAM AREA, 9 LIFT STATIONS. SUPPLIER SHALL BE AVAILABLE TO REMOVE SEWAGE ON A 24 HOUR, 7 DAYS PER WEEK BASIS. SUPPLIER SHALL BE CAPABLE OF HAULING VARIOUS AMOUNTS OF SEWAGE FROM 850 GALLONS TO 2000 GALLONS.	N N N N N N N N N N N N N N N N N N N N N	TO BE DETERMINED	

REQUISITIONER'S BLANKET ORDER REPORT
COMPANY 0001
VIRGINIA ELECTRIC AND POWER COMPANY

BLANKET ORDER NUMBER BNT 460661 REVISION 001 BLANKET TYPE PA

ITEM NO.	QUANTITY REQUIRED	UNIT	STOCK NUMBER	DETAIL DESCRIPTION	SUPPRESS PRINT	UNIT PRICE	E
					N		
				SUPPLIER'S TRUCK SHALL BE KEPT CLEAN AT ALL TIMES AND IN GOOD WORKING CONDITION.	N		
					N		
				SUPPLIER SHALL HAUL AND DISPOSE OF SEWAGE IN ACCORDANCE WITH ALL APPLICABLE LOCAL, STATE, AND FEDERAL REGULATIONS AND SHALL CARRY PROPER LICENSING FOR DISPOSAL AT THE DUMP SITES.	N		
					N		
				COMPENSATION	N		
					N		
				$ 0.13 PER GALLON FOR SEWAGE REMOVAL AND DISPOSAL. SUCH PRICE IS ALL-INCLUSIVE AND INCLUDES ALL COSTS ASSOCIATED WITH THE REMOVAL AND DISPOSAL OF SEWAGE FROM NORTH ANNA POWER STATION TO THE DUMP SITE.	N		
					N		
				$ 70.00 PER HOUR IF SUPPLIER IS REQUIRED BY COMPANY TO STANDBY PRIOR TO ENTERING THE PROTECTED AREA OF THE STATION. SUCH TIME SHALL BE DOCUMENTED BY SUPPLIER.	N		
					N		
				THE ABOVE RATES ARE FIRM THROUGH APRIL 30, 1995.	N		
					N		
				TOTAL COMPENSATION PAYABLE TO SUPPLIER SHALL NOT EXCEED $100,000.00 WITHOUT WRITTEN REVISION TO THIS ORDER.	N		
					N		
				04/12/94DRS RECEIVED CERTIFICATION OF INSURANCE EXPIRING 04/01/95.	Y		
					Y		
				03/23/94DRS RECEIVED SIGNED ACCEPTANCE COPY OF P.O. DATED 03/21/94. NO EXCEPTIONS NOTED. SENT TO FILE.	Y		
					Y		
					Y		
					Y		
					Y		

REPORT.NO. PR012805 DOMINION RESOURCES, INC. 06.28.54 04/23/95

REQUISITIONER'S BLANKET ORDER REPORT
COMPANY 0001
VIRGINIA ELECTRIC AND POWER COMPANY

BLANKET ORDER NUMBER BNT 460661 REVISION 001 BLANKET TYPE PA

REQUISITION NUMBER: R851800025758 LINE: 0001

RC: R ACCOUNTING INFORMATION:

IND	ACCOUNT	DISTRIBUTION PCT: 100

RC: SHIP TO: 000000

MAX DOLLARS: 100000 DOLLARS PER RELEASE: 100000
MAX QUANTITY: 999 QTY PER RELEASE: 999

BLANKET ORDER TOTAL: $ 0.00

No. 96 - 120 - 000116

PERMIT

COMMONWEALTH OF VIRGINIA
DEPARTMENT OF HEALTH

SEWAGE HANDLING

THIS PERMIT EXPIRES ON

DECEMBER 31, 2000

DATE OF ISSUE

DECEMBER 17, 1999

OPERATOR: Coleman Lyttle
ADDRESS: STAMIE E. LYTTLE COMPANY
~~2210 East Belt Blvd.~~
Richmond, VA 23224

VEHICLE MAKE / 96 FORD / SIZE 2500 GAL. / STATE LICENSE TT58-082
TRUCK 97

TT58-082

The above operator has made application and in accordance with the regulations of the Board of Health of the Commonwealth of Virginia is authorized by the Chesterfield County *Health Department to operate a* sewage handling equipment in Chesterfield, Hopewell, Petersburg, Prince George, Charles City, Richmond, Hanover, Powhatan, Dinwiddie, Henrico, Cumberland, Amelia, Louisa & Goochland.

William R. Nolan M.D.

HEALTH OFFICIAL

No. 96 - 120 - 0001H3

PERMIT

COMMONWEALTH OF VIRGINIA
DEPARTMENT OF HEALTH

SEWAGE HANDLING

THIS PERMIT EXPIRES ON

DECEMBER 31, 2000

DATE OF ISSUE

DECEMBER 17, 1999

OPERATOR: Coleman Lyttle
ADDRESS: STAMIE E. LYTTLE COMPANY
2210 East Belt Blvd.
Richmond, VA 23224

VEHICLE MAKE / FORD / SIZE 2500 GAL. / STATE LICENSE T571-980

TRUCK #95

T571980

The above operator has made application and in accordance with the regulations of the Board of Health of the Commonwealth of Virginia is authorized by the Chesterfield County *Health Department to operate a* sewage handling equipment in Chesterfield, Hopewell, Petersburg, Prince George, Charles City, Richmond, Hanover, Powhatan, Dinwiddie, Henrico, Cumberland, Amelia, Louisa & Goochland.

William R. Nolan M.D.

HEALTH OFFICIAL

No. 96 - 120 - 0001B5

PERMIT

COMMONWEALTH OF VIRGINIA
DEPARTMENT OF HEALTH

SEWAGE HANDLING

THIS PERMIT EXPIRES ON

DECEMBER 31, 2000

DATE OF ISSUE

DECEMBER 17, 1999

OPERATOR: Coleman Lyttle
ADDRESS: STAMIE E. LYTTLE COMPANY
2210 East Belt Blvd.
RICHMOND, VA 23224

VEHICLE MAKE / INTERNATIONAL / SIZE 2000 GAL. / STATE LICENSE 14 - 425TA

TRUCK 25

14-425TA

The above operator has made application and in accordance with the regulations of the Board of Health of the Commonwealth of Virginia is authorized by the Chesterfield County *Health Department to operate a* sewage handling equipment in Chesterfield, Hopewell, Petersburg, Prince George, Charles City, Richmond, Hanover, Powhatan, Dinwiddie, Henrico, Cumberland, Amelia, Louisa & Goochland.

William R. Molan M.D.

HEALTH OFFICIAL

No. 96 - 120 - 0001H

PERMIT

COMMONWEALTH OF VIRGINIA
DEPARTMENT OF HEALTH

SEWAGE HANDLING

THIS PERMIT EXPIRES ON

DECEMBER 31, 2000

DATE OF ISSUE

DECEMBER 17, 1999

OPERATOR: Coleman Lyttle
ADDRESS: STAMIE E. LYTTLE COMPANY
2210 East Belt Blvd.
Richmond, VA 23224

VEHICLE MAKE / FORD / SIZE 2500 GAL. / STATE LICENSE 19 - 865 TA

TRUCK #20 19-865-TA

The above operator has made application and in accordance with the regulations of the Board of Health of the Commonwealth of Virginia is authorized by the Chesterfield County *Health Department to operate a* sewage handling equipment in Chesterfield, Hopewell, Petersburg, Prince George, Charles City, Richmond, Hanover, Powhatan, Dinwiddie, Henrico, Cumberland, Amelia, Louisa & Goochland.

William R. Nolan M.D.

HEALTH OFFICIAL

EPA Form 3510-2F

Please print or type in the unshaded areas only

EPA ID Number *(copy from Item I of Form 1)*
VAD065376279

Form Approved. OMB No. 2040-0086
Approval expires 5-31-92

Form **2F** NPDES

EPA

United States Environmental Protection Agency
Washington, DC 20460

Application for Permit To Discharge Stormwater Discharges Associated with Industrial Activity

Paperwork Reduction Act Notice

Public reporting burden for this application is estimated to average 28.6 hours per application, including time for reviewing instructions, searching existing data sources, gathering and maintaining the data needed, and completing and reviewing the collection of information. Send comments regarding the burden estimate, any other aspect of this collection of information, or suggestions for improving this form, including suggestions which may increase or reduce this burden to: Chief, Information Policy Branch, PM-223, U.S. Environmental Protection Agency, 401 M St., SW, Washington, DC 20460, or Director, Office of Information and Regulatory Affairs, Office of Management and Budget, Washington, DC 20503.

I. Outfall Location

For each outfall, list the latitude and longitude of its location to the nearest 15 seconds and the name of the receiving water.

A. Outfall Number *(list)*	B. Latitude			C. Longitude			D. Receiving Water *(name)*
022	38	03	55	77	47	55	Lake Anna
023	38	03	53	77	47	58	Lake Anna
024	38	03	58	77	47	44	Lake Anna
025	38	03	08	77	47	25	Waste Heat Treatment Facility
026	38	03	50	77	48	05	Lake Anna

II. Improvements

A. Are you now required by any Federal, State, or local authority to meet any implementation schedule for the construction, upgrading or operation of wastewater treatment equipment or practices or any other environmental programs which may affect the discharges described in this application? This includes, but is not limited to, permit conditions, administrative or enforcement orders, enforcement compliance schedule letters, stipulations, court orders, and grant or loan conditions.

1. Identification of Conditions, Agreements, Etc.	2. Affected Outfalls		3. Brief Description of Project	4. Final Compliance Date	
	number	source of discharge		a. req.	b. proj.
None					

B. You may attach additional sheets describing any additional water pollution (or other environmental projects which may affect your discharges) you now have under way or which you plan. Indicate whether each program is now under way or planned, and indicate your actual or planned schedules for construction.

III. Site Drainage Map

See attached VPDES Outfall Locations Map

Attach a site map showing topography (or indicating the outline of drainage areas served by the outfall(s) covered in the application if a topographic map is unavailable) depicting the facility including: each of its intake and discharge structures; the drainage area of each storm water outfall; paved areas and buildings within the drainage area of each storm water outfall, each known past or present areas used for outdoor storage or disposal of significant materials, each existing structural control measure to reduce pollutants in storm water runoff, materials loading and access areas, areas where pesticides, herbicides, soil conditioners and fertilizers are applied; each of its hazardous waste treatment, storage or disposal units (including each area not required to have a RCRA permit which is used for accumulating hazardous waste under 40 CFR 262.34); each well where fluids from the facility are injected underground; springs, and other surface water bodies which receive storm water discharges from the facility.

Continue on Page 2

IV. Narrative Description of Pollutant Sources

A. For each outfall, provide an estimate of the area (include units) of impervious surfaces (including paved areas and building roofs) drained to the outfall, and an estimate of the total surface area drained by the outfall.

Outfall Number	Area of Impervious Surface *(provide units)*	Total Area Drained *(provide units)*	Outfall Number	Area of Impervious Surface *(provide units)*	Total Area Drained *(provide units)*
022	7.1 acres	52 acres	025	4 acres	56 acres
023	0.09 acres	6 acres	026	none	61 acres
024	0.08 acres	9 acres			

B. Provide a narrative description of significant materials that are currently or in the past three years have been treated, stored or disposed in a manner to allow exposure to storm water; method of treatment, storage, or disposal; past and present materials management practices employed to minimize contact by these materials with storm water runoff; materials loading and access areas; and the location, manner, and frequency in which pesticides, herbicides, soil conditioners, and fertilizers are applied.

OUTFALLS 022 - 026 See Attachment "Storm Water Deainage Area Description"

C. For each outfall, provide the location and a description of existing structural and nonstructural control measures to reduce pollutants in storm water runoff; and a description of the treatment the storm water receives, including the schedule and type of maintenance for control and treatment measures and the ultimate disposal of any solid or fluid wastes other than by discharge.

Outfall Number	Treatment	List Codes from Table 2F-1
022 - 026	No treatment - Discharge to Surface Water	4-A

V. Nonstormwater Discharges

A. I certify under penalty of law that the outfall(s) covered by this application have been tested or evaluated for the presence of nonstormwater discharges, and that all nonstormwater discharges from these outfall(s) are identified in either an accompanying Form 2C or Form 2E application for the outfall.

Name and Official Title *(type or print)*	Signature	Date Signed
W.R.MATTHEWS VICE PRESIDENT AND STATION MANAGER	W R Matthews	3/30/00

B. Provide a description of the method used, the date of any testing, and the onsite drainage points that were directly observed during a test.

Dry day observations of all surface conveyances during annual inspections on dates - 2/26/96, 9/23/97, 9/24/98, 8/19/99

VI. Significant Leaks or Spills

Provide existing information regarding the history of significant leaks or spills of toxic or hazardous pollutants at the facility in the last three years, including the approximate date and location of the spill or leak, and the type and amount of material released.

None.

Continue on Page 3

Continued from Page 2

EPA ID Number *(copy from Item I of Form 1)*
VAD065376279

VII. Discharge Information

A, B, C, & D: See instructions before proceeding. Complete one set of tables for each outfall. Annotate the outfall number in the space provided. Tables VII-A, VII-B, and VII-C are included on separate sheets numbered VII-1 and VII-2.

E: Potential discharges not covered by analysis - is any pollutant listed in table 2F-2, 2F-3 or 2F-4, a substance or a component of a substance which you currently use or manufacture as an intermediate or final product or byproduct?

☐ Yes *(list all such pollutants below)* ☒ No *(go to Section IX)*

VIII. Biological Toxicity Testing Data

Do you have any knowledge or reason to believe that any biological test for acute or chronic toxicity has been made on any of your discharges or on a receiving water in relation to your discharge within the last 3 years?

☒ Yes *(list all such pollutants below)* ☐ No *(go to Section IX)*

Outfall 001 (Discharge of Condenser Cooling Water from WHTF at Dike 3) has been tested for toxicity. See Form 3510-2C.

IX. Contract Analysis Information

Were any of the analysis reported in item VII performed by a contract laboratory or consulting firm?

☐ Yes *(list the name, address, and telephone number of, and pollutants analyzed by, each such laboratory or firm below)* ☒ No *(go to Section X)*

A. Name	B. Address	C. Area Code & Phone No.	D. Pollutants Analyzed

X. Certification

I certify under penalty of law that this document and all attachments were prepared under my direction or supervision in accordance with a system designed to assure that qualified personnel properly gather and evaluate the information submitted. Based on my inquiry of the person or persons who manage the system or those persons directly responsible for gathering the information, the information submitted is, to the best of my knowledge and belief, true, accurate, and complete. I am aware that there are significant penalties for submitting false information, including the possibility of fine and imprisonment for knowing violations.

A. Name & Official Title *(type or print)*	B. Area Code and Phone No.
W. R. MATTHEWS, VICE PRESIDENT - STATION MANAGER	(540)894-2101
C. Signature	D. Date Signed
W R Matthews	3/30/00

EPA ID Number *(copy from Item I of Form 1)*	Form Approved. OMB No. 2040-0086
VAD065376279	OUTFALL 022 Approval expires 5-31-92

VII. Discharge Information *(Continued from page 3 of Form 2F)*

Part A - You must provide the results of at least one analysis for every pollutant in this table. Complete one table for each outfall. See instructions for additional details.

Pollutant and CAS Number *(if available)*	Maximum Values *(include units)*		Average Values *(include units)*		Number of Storm Events Sampled	Sources of Pollutants
	Grab Sample Taken During First 20 Minutes	Flow-weighted Composite	Grab Sample Taken During First 20 Minutes	Flow-weighted Composite		
Oil and Grease	<5.00 ppm	N/A			1	
Biological Oxygen Demand (BOD5)	3.64 ppm	4.23 ppm			1	
Chemical Oxygen Demand (COD)	<5.00 ppm	18.00 ppm			1	
Total Suspended Solids (TSS)	6.5 ppm	88.0 ppm			1	
Total Nitrogen	0.62 ppm	0.64 ppm			1	
Total Phosphorus	0.04 ppm	0.07 ppm			1	
pH	Minimum 6.9	Maximum 6.9	Minimum	Maximum	1	

Part B - List each pollutant that is limited in an effluent guideline which the facility is subject to or any pollutant listed in the facility's NPDES permit for its process wastewater (if the facility is operating under an existing NPDES permit). Complete one table for each outfall. See the instructions for additional details and requirements.

Pollutant and CAS Number *(if available)*	Maximum Values *(include units)*		Average Values *(include units)*		Number of Storm Events Sampled	Sources of Pollutants
	Grab Sample Taken During First 20 Minutes	Flow-weighted Composite	Grab Sample Taken During First 20 Minutes	Flow-weighted Composite		
(continued	from page	VII-2)				
Titanium	<10 ppb	228 ppb			1	
Zinc	0.190 ppm	0.150 ppm			1	

Part C - List each pollutant shown in Tables 2F-2, 2F-3, and 2F-4 that you know or have reason to believe is present. See the instructions for additional details and requirements. Complete one table for each outfall.

Pollutant and CAS Number (if available)	Maximum Values (include units)		Average Values (include units)		Number of Storm Events Sampled	Sources of Pollutants
	Grab Sample Taken During First 20 Minutes	Flow-weighted Composite	Grab Sample Taken During First 20 Minutes	Flow-weighted Composite		
Ammonia	0.16 ppm	0.17 ppm			1	
Boron	0.03 ppm	0.04 ppm			1	
Bromide	0.58 ppm	<0.20 ppm			1	
Color	40	80			1	
Fluoride	0.133 ppm	0.134 ppm			1	
MBAS as LAS	0.046 ppm	0.065 ppm			1	
NO3+NO2	0.79 ppm	0.78 ppm			1	
Sulfate	6.99 ppm	17.36 ppm			1	
Sulfide	<0.01 ppm	0.17 ppm			1	
Aluminum	0.32 ppm	5.07 ppm			1	
Antimony	<2 ppb	<2 ppb			1	
Arsenic	<3 ppb	<3 ppb			1	
Barium	87 ppb	72 ppb			1	
Beryllium	<0.2 ppb	<0.2 ppb			1	
Cadmium	<0.3 ppb	0.4 ppb			1	
Chromium	4 ppb	8 ppb			1	
Cobalt	<3 ppb	<3 ppb			1	
Copper	1 ppb	12 ppb			1	
Iron	1.81 ppm	5.38 ppm			1	
Lead	1 ppb	7 ppb			1	
Magnesium	5.79 ppm	3.56 ppm			1	
Manganese	0.43 ppm	0.21 ppm			1	
Mercury	<0.2 ppb	<0.2 ppb			1	
Molybdenum	<1 ppb	7 ppb			1	
Nickel	<5 ppb	<5 ppb			1	
Selenium	<3 ppb	<3 ppb			1	
Silver	<0.1 ppb	<0.1 ppb			1	
Thallium	<2 ppb	<2 ppb			1	
Tin	<5 ppb	<5 ppb			1	
(continued on page VII-1)						

Part D - Provide data for the storm event(s) which resulted in the maximum values for the flow weighted composite sample.

1. Date of Storm Event	2. Duration of Storm Event (in minutes)	3. Total rainfall during storm event (in inches)	4. Number of hours between beginning of storm measured and end of previous measurable rain event	5. Maximum flow rate during rain event (gallons/minute or specify units)	6. Total flow from rain event (gallons or specify units)
10/4 1999	180 minutes	0.26 inches	90 hrs	50 gallons/minute estimated	15,000 gallons estimated during sampling

9. Provide a description of the method of flow measurement or estimate.

Timed bucket collection - 5 gallon

EPA ID Number *(copy from Item I of Form 1)*	Form Approved. OMB No. 2040-0086
VAD065376279	OUTFALL 023 Approval expires 5-31-92

VII. Discharge Information *(Continued from page 3 of Form 2F)*

Part A - You must provide the results of at least one analysis for every pollutant in this table. Complete one table for each outfall. See instructions for additional details.

Pollutant and CAS Number *(if available)*	Maximum Values *(include units)*		Average Values *(include units)*		Number of Storm Events Sampled	Sources of Pollutants
	Grab Sample Taken During First 20 Minutes	Flow-weighted Composite	Grab Sample Taken During First 20 Minutes	Flow-weighted Composite		
Oil and Grease	<5.00 ppm	N/A			1	
Biological Oxygen Demand (BOD5)	7.41 ppm	4.19 ppm			1	
Chemical Oxygen Demand (COD)	<5.00 ppm	300 ppm			1	
Total Suspended Solids (TSS)	160.0 ppm	287.0 ppm			1	
Total Nitrogen	1.30 ppm	0.92 ppm			1	
Total Phosphorus	0.12 ppm	0.04 ppm			1	
pH	Minimum 7.11	Maximum 7.11	Minimum	Maximum	1	

Part B - List each pollutant that is limited in an effluent guideline which the facility is subject to or any pollutant listed in the facility's NPDES permit for its process wastewater (if the facility is operating under an existing NPDES permit). Complete one table for each outfall. See the instructions for additional details and requirements.

Pollutant and CAS Number *(if available)*	Maximum Values *(include units)*		Average Values *(include units)*		Number of Storm Events Sampled	Sources of Pollutants
	Grab Sample Taken During First 20 Minutes	Flow-weighted Composite	Grab Sample Taken During First 20 Minutes	Flow-weighted Composite		
(continued	from page	VII-2)				
Titanium	1268 ppb	1105 ppb			1	
Zinc	2.550 ppm	0.561 ppm			1	

Part C - List each pollutant shown in Tables 2F-2, 2F-3, and 2F-4 that you know or have reason to believe is present. See the instructions for additional details and requirements. Complete one table for each outfall.

Pollutant and CAS Number (if available)	Maximum Values (include units)		Average Values (include units)		Number of Storm Events Sampled	Sources of Pollutants
	Grab Sample Taken During First 20 Minutes	Flow-weighted Composite	Grab Sample Taken During First 20 Minutes	Flow-weighted Composite		
Ammonia	0.13 ppm	0.06 ppm			1	
Boron	0.04 ppm	0.04 ppm			1	
Bromide	<0.20 ppm	<0.20 ppm			1	
Color	140	300			1	
Fluoride	0.060 ppm	0.118 ppm			1	
MBAS as LAS	<0.025 ppm	<0.025 ppm			1	
NO3+NO2	0.09 ppm	0.40 ppm			1	
Sulfate	5.76 ppm	5.94 ppm			1	
Sulfide	0.11 ppm	0.02 ppm			1	
Aluminum	24.17 ppm	18.97 ppm			1	
Antimony	<2 ppb	<2 ppb			1	
Arsenic	<3 ppb	<3 ppb			1	
Barium	275 ppb	176 ppb			1	
Beryllium	2.0 ppb	1.2 ppb			1	
Cadmium	3.3 ppb	0.9 ppb			1	
Chromium	14 ppb	13 ppb			1	
Cobalt	15 ppb	6 ppb			1	
Copper	78 ppb	42 ppb			1	
Iron	30.30 ppm	19.80 ppm			1	
Lead	46 ppb	23 ppb			1	
Magnesium	7.32 ppm	4.79 ppm			1	
Manganese	1.13 ppm	0.33 ppm			1	
Mercury	<0.2 ppb	<0.2 ppb			1	
Molybdenum	2 ppb	2 ppb			1	
Nickel	19 ppb	10 ppb			1	
Selenium	<3 ppb	<3 ppb			1	
Silver	<0.1 ppb	<0.1 ppb			1	
Thallium	<2 ppb	<2 ppb			1	
Tin	<5 ppb	<5 ppb			1	
(continued on page VII-1)						

Part D - Provide data for the storm event(s) which resulted in the maximum values for the flow weighted composite sample.

1. Date of Storm Event	2. Duration of Storm Event (in minutes)	3. Total rainfall during storm event (in inches)	4. Number of hours between beginning of storm measured and end of previous measurable rain event	5. Maximum flow rate during rain event (gallons/minute or specify units)	6. Total flow from rain event (gallons or specify units)
11/2 1999	300 minutes	0.91 inches	240 hours	4 gallons/minute	5,820 gallons estimated during sampling

9. Provide a description of the method of flow measurement or estimate.

Timed bucket collection, 5-gallon

EPA ID Number *(copy from Item I of Form 1)*	Form Approved. OMB No. 2040-0086
VAD065376279	OUTFALL 024 Approval expires 5-31-92

VII. Discharge Information *(Continued from page 3 of Form 2F)*

Part A - You must provide the results of at least one analysis for every pollutant in this table. Complete one table for each outfall. See instructions for additional details.

Pollutant and CAS Number *(if available)*	Maximum Values *(include units)*		Average Values *(include units)*		Number of Storm Events Sampled	Sources of Pollutants
	Grab Sample Taken During First 20 Minutes	Flow-weighted Composite	Grab Sample Taken During First 20 Minutes	Flow-weighted Composite		
Oil and Grease	5.00 ppm	N/A			1	
Biological Oxygen Demand (BOD5)	5.38 ppm	4.24 ppm			1	
Chemical Oxygen Demand (COD)	<5.00 ppm	<5.00 ppm			1	
Total Suspended Solids (TSS)	602 ppm	222 ppm			1	
Total Nitrogen	0.63 ppm	1.12 ppm			1	
Total Phosphorus	0.10 ppm	0.09 ppm			1	
pH	Minimum 7.06	Maximum 7.06	Minimum	Maximum	1	

Part B - List each pollutant that is limited in an effluent guideline which the facility is subject to or any pollutant listed in the facility's NPDES permit for its process wastewater (if the facility is operating under an existing NPDES permit). Complete one table for each outfall. See the instructions for additional details and requirements.

Pollutant and CAS Number *(if available)*	Maximum Values *(include units)*		Average Values *(include units)*		Number of Storm Events Sampled	Sources of Pollutants
	Grab Sample Taken During First 20 Minutes	Flow-weighted Composite	Grab Sample Taken During First 20 Minutes	Flow-weighted Composite		
(continued	from page	VII-2)				
Titanium	2499 ppb	442 ppb			1	
Zinc	0.414 ppm	0.135 ppm			1	

Part C - List each pollutant shown in Tables 2F-2, 2F-3, and 2F-4 that you know or have reason to believe is present. See the instructions for additional details and requirements. Complete one table for each outfall.

Pollutant and CAS Number (if available)	Maximum Values (include units)		Average Values (include units)		Number of Storm Events Sampled	Sources of Pollutants
	Grab Sample Taken During First 20 Minutes	Flow-weighted Composite	Grab Sample Taken During First 20 Minutes	Flow-weighted Composite		
Ammonia	0.06 ppm	0.03 ppm			1	
Boron	<0.02 ppm	0.03 ppm			1	
Bromide	<0.20 ppm	<0.20 ppm			1	
Color	400	150			1	
Fluoride	0.129 ppm	0.107 ppm			1	
MBAS as LAS	<0.025 ppm	<0.025 ppm			1	
NO3+NO2	0.02 ppm	0.07 ppm			1	
Sulfate	10.86 ppm	7.61 ppm			1	
Sulfide	0.08 ppm	0.03 ppm			1	
Aluminum	33.75 ppm	5.12 ppm			1	
Antimony	<2 ppb	<2 ppb			1	
Arsenic	<3 ppb	<3 ppb			1	
Barium	221 ppb	57 ppb			1	
Beryllium	3.0 ppb	0.5 ppb			1	
Cadmium	1.3 ppb	<0.3 ppb			1	
Chromium	20 ppb	6 ppb			1	
Cobalt	14 ppb	<3 ppb			1	
Copper	50 ppb	18 ppb			1	
Iron	35.10 ppm	5.78 ppm			1	
Lead	43 ppb	13 ppb			1	
Magnesium	10.5 ppm	2.47 ppm			1	
Manganese	0.65 ppm	0.14 ppm			1	
Mercury	<0.2 ppb	<0.2 ppb			1	
Molybdenum	2 ppb	<1 ppb			1	
Nickel	22 ppb	<5 ppb			1	
Selenium	<3 ppb	<3 ppb			1	
Silver	1.0 ppb	<0.1 ppb			1	
Thallium	<2 ppb	<2 ppb			1	
Tin	<5 ppb	<5 ppb			1	
(continued on page VII-1)						

Part D - Provide data for the storm event(s) which resulted in the maximum values for the flow weighted composite sample.

1. Date of Storm Event	2. Duration of Storm Event (in minutes)	3. Total rainfall during storm event (in inches)	4. Number of hours between beginning of storm measured and end of previous measurable rain event	5. Maximum flow rate during rain event (gallons/minute or specify units)	6. Total flow from rain event (gallons or specify units)
11/2 1999	300 minutes	0.91 inches	240 hours	5 gallons/minute	1,500 gallons estimated during sampling

9. Provide a description of the method of flow measurement or estimate.

Timed bucket collection, 5-gallon

EPA ID Number *(copy from Item I of Form 1)*	Form Approved. OMB No. 2040-0086
VAD065376279	OUTFALL 025 Approval expires 5-31-92

VII. Discharge Information *(Continued from page 3 of Form 2F)*

Part A - You must provide the results of at least one analysis for every pollutant in this table. Complete one table for each outfall. See instructions for additional details.

Pollutant and CAS Number *(if available)*	Maximum Values *(include units)*		Average Values *(include units)*		Number of Storm Events Sampled	Sources of Pollutants
	Grab Sample Taken During First 20 Minutes	Flow-weighted Composite	Grab Sample Taken During First 20 Minutes	Flow-weighted Composite		
Oil and Grease	<5.00 ppm	N/A			1	
Biological Oxygen Demand (BOD5)	4.87 ppm	2.64 ppm			1	
Chemical Oxygen Demand (COD)	32.00 ppm	10.00 ppm			1	
Total Suspended Solids (TSS)	12.9 ppm	4.7 ppm			1	
Total Nitrogen	0.68 ppm	1.90 ppm			1	
Total Phosphorus	0.08 ppm	0.06 ppm			1	
pH	Minimum 7.0	Maximum 7.0	Minimum	Maximum	1	

Part B - List each pollutant that is limited in an effluent guideline which the facility is subject to or any pollutant listed in the facility's NPDES permit for its process wastewater (if the facility is operating under an existing NPDES permit). Complete one table for each outfall. See the instructions for additional details and requirements.

Pollutant and CAS Number *(if available)*	Maximum Values *(include units)*		Average Values *(include units)*		Number of Storm Events Sampled	Sources of Pollutants
	Grab Sample Taken During First 20 Minutes	Flow-weighted Composite	Grab Sample Taken During First 20 Minutes	Flow-weighted Composite		
(continued	from page	VII-2)				
Titanium	15 ppb	<10 ppb			1	
Zinc	0.200 ppm	0.150 ppm			1	

Part C - List each pollutant shown in Tables 2F-2, 2F-3, and 2F-4 that you know or have reason to believe is present. See the instructions for additional details and requirements. Complete one table for each outfall.

Pollutant and CAS Number *(if available)*	Maximum Values *(include units)*		Average Values *(include units)*		Number of Storm Events Sampled	Sources of Pollutants
	Grab Sample Taken During First 20 Minutes	Flow-weighted Composite	Grab Sample Taken During First 20 Minutes	Flow-weighted Composite		
Ammonia	0.14 ppm	0.13 ppm			1	
Boron	<0.02 ppm	0.02 ppm			1	
Bromide	<0.20 pp	<0.20 ppm			1	
Color	40	30			1	
Fluoride	0.205 ppm	0.104 ppm			1	
MBAS as LAS	0.097 ppm	0.082 ppm			1	
NO3+NO2	0.72 ppm	0.54 ppm			1	
Sulfate	22.34 ppm	8.11 ppm			1	
Sulfide	<0.01 ppm	<0.01 ppm			1	
Aluminum	0.67 ppm	0.38 ppm			1	
Antimony	<2 ppb	<2 ppb			1	
Arsenic	<3 ppb	<3 ppb			1	
Barium	25 ppb	15 ppb			1	
Beryllium	<0.2 ppb	<0.2 ppb			1	
Cadmium	0.6 ppb	<0.3 ppb			1	
Chromium	4 ppb	1 ppb			1	
Cobalt	<3 ppb	<3 ppb			1	
Copper	7 ppb	5 ppb			1	
Iron	1.55 ppm	0.40 ppm			1	
Lead	4 ppb	<1 ppb			1	
Magnesium	1.02 ppm	0.58 ppm			1	
Manganese	0.08 ppm	0.03 ppm			1	
Mercury	<0.2 ppb	<0.2 ppb			1	
Molybdenum	153 ppb	75 ppb			1	
Nickel	<5 ppb	<5 ppb			1	
Selenium	<3 ppb	<3 ppb			1	
Silver	0.1 ppb	<0.1 ppb			1	
Thallium	<2 ppb	< 2 ppb			1	
Tin	<5 ppb	< 5 ppb			1	
(continued	on page VII	-1)				

Part D - Provide data for the storm event(s) which resulted in the maximum values for the flow weighted composite sample.

1. Date of Storm Event	2. Duration of Storm Event *(in minutes)*	3. Total rainfall during storm event *(in inches)*	4. Number of hours between beginning of storm measured and end of previous measurable rain event	5. Maximum flow rate during rain event *(gallons/minute or specify units)*	6. Total flow from rain event *(gallons or specify units)*
10/4 1999	180 minutes	0.26 inches	90 hours	35 gallons/minute estimated	11,160 gallons estimated during sampling

9. Provide a description of the method of flow measurement or estimate.

Timed bucket collection, 5-gallon

EPA ID Number *(copy from Item I of Form 1)*	Form Approved. OMB No. 2040-0086
VAD065376279	OUTFALL 026 Approval expires 5-31-92

VII. Discharge Information *(Continued from page 3 of Form 2F)*

Part A - You must provide the results of at least one analysis for every pollutant in this table. Complete one table for each outfall. See instructions for additional details.

Pollutant and CAS Number *(if available)*	Maximum Values *(include units)*		Average Values *(include units)*		Number of Storm Events Sampled	Sources of Pollutants
	Grab Sample Taken During First 20 Minutes	Flow-weighted Composite	Grab Sample Taken During First 20 Minutes	Flow-weighted Composite		
Oil and Grease	<5.00 ppm	N/A			1	
Biological Oxygen Demand (BOD5)	4.49 ppm	5.21 ppm			1	
Chemical Oxygen Demand (COD)	<5.00 ppm	<5.00 ppm			1	
Total Suspended Solids (TSS)	320 ppm	280 ppm			1	
Total Nitrogen	0.85 ppm	1.20 ppm			1	
Total Phosphorus	0.11 ppm	0.13 ppm			1	
pH	Minimum 6.95	Maximum 6.95	Minimum	Maximum	1	

Part B - List each pollutant that is limited in an effluent guideline which the facility is subject to or any pollutant listed in the facility's NPDES permit for its process wastewater (if the facility is operating under an existing NPDES permit). Complete one table for each outfall. See the instructions for additional details and requirements.

Pollutant and CAS Number *(if available)*	Maximum Values *(include units)*		Average Values *(include units)*		Number of Storm Events Sampled	Sources of Pollutants
	Grab Sample Taken During First 20 Minutes	Flow-weighted Composite	Grab Sample Taken During First 20 Minutes	Flow-weighted Composite		
(continued	from page	VII-2)				
Titanium	1525 ppb	955 ppb			1	
Zinc	0.354 ppm	0.236 ppm			1	

Part C - List each pollutant shown in Tables 2F-2, 2F-3, and 2F-4 that you know or have reason to believe is present. See the instructions for additional details and requirements. Complete one table for each outfall.

Pollutant and CAS Number *(if available)*	Maximum Values *(include units)*		Average Values *(include units)*		Number of Storm Events Sampled	Sources of Pollutants
	Grab Sample Taken During First 20 Minutes	Flow-weighted Composite	Grab Sample Taken During First 20 Minutes	Flow-weighted Composite		
Ammonia	0.10 ppm	0.07 ppm			1	
Boron	0.03 ppm	0.03 ppm			1	
Bromide	0.22 ppm	<0.20 ppm			1	
Color	200	350			1	
Fluoride	0.101 ppm	0.130 ppm			1	
MBAS as LAS	<0.025 ppm	<0.025 ppm			1	
NO3+NO2	0.10 ppm	0.30 ppm			1	
Sulfate	12.06 ppm	7.69 ppm			1	
Sulfide	0.03 ppm	0.05 ppm			1	
Aluminum	22.85 ppm	17.51 ppm			1	
Antimony	<2 ppb	<2 ppb			1	
Arsenic	<3 ppb	<3 ppb			1	
Barium	170 ppb	143 ppb			1	
Beryllium	1.3 ppb	0.8 ppb			1	
Cadmium	<0.3 ppb	0.9 ppb			1	
Chromium	15 ppb	11 ppb			1	
Cobalt	8 ppb	7 ppb			1	
Copper	31 ppb	26 ppb			1	
Iron	21.20 ppm	16.30 ppm			1	
Lead	26 ppb	24 ppb			1	
Magnesium	5.09 ppm	4.40 ppm			1	
Manganese	0.33 ppm	0.26 ppm			1	
Mercury	<0.2 ppb	<0.2 ppb			1	
Molybdenum	2 ppb	2 ppb			1	
Nickel	13 ppb	9 ppb			1	
Selenium	<3 ppb	<3 ppb			1	
Silver	<0.1 ppb	<0.1 ppb			1	
Thallium	<2 ppb	<2 ppb			1	
Tin	<5 ppb	<5 ppb			1	
(continued on page VII-1)						

Part D - Provide data for the storm event(s) which resulted in the maximum values for the flow weighted composite sample.

1. Date of Storm Event	2. Duration of Storm Event *(in minutes)*	3. Total rainfall during storm event *(in inches)*	4. Number of hours between beginning of storm measured and end of previous measurable rain event	5. Maximum flow rate during rain event *(gallons/minute or specify units)*	6. Total flow from rain event *(gallons or specify units)*
11/2 1999	300 minutes	0.91 inches	240 hours	2 gallons/minute	540 gallons estimated during sampling

9. Provide a description of the method of flow measurement or estimate.

Timed bucket collection, 5-gallon

Storm Water Drainage Area Description
(to support EPA Form 3510-2F, Section IV-B)

APPENDIX 1

NORTH ANNA POWER STATION
Storm Water Drainage Area Description
Narrative Discussion of Pollutants Sources

Characterization of the North Anna Power Station stormwater drainage areas was accomplished through the combined efforts of station personnel and corporate Civil/Mechanical Engineering and Water Quality Department staffs to ensure a comprehensive evaluation of potential impacts on stromwater discharges. Delineation of drainage areas was determined by field inspection with the aid of topographic maps and existing site drawings. Evaluation of industrial activities in each drainage area and potential for contamination of stormwater runoff was conducted by compilation of information from records, station drawings, and knowledge of station personnel, and verification by field inspection.

Except as indicated in the individual drainage area characterizations below, all industrial activities and materials at the station are conducted, handled or stored in enclosures which prevent exposure to stormwater or runoff. The majority of the drainage areas have no industrial activity, which includes storage of materials, use of pesticides, herbicides, or fertilizers, disposal of significant materials, etc., past or present.

Areas 2A (Outfall 022), 2B (Outfall 023), 3 (Outfall 024), 18 (Outfall 025), and 25 (Outfall 026) were determined to include stormwater only discharges draining vicinities associated with industrial activities, although those activities are not generally exposed to stormwater, were included in the sampling and analysis efforts for this application. These drainage areas are discussed in more detail below.

Stormwater discharges which are combined with process discharges are those in the main part of the station which were included in the existing VPDES permit outfalls. These are identified and discussed below in the section regarding "evaluation of other drainage areas". Stormwater sampling of these discharges was conducted for the current VPDES permit application.

Station herbicide usage is limited to minor spot applications of Roundup, as needed, around the main station buildings and adjacent parking lots and roadways. System herbicide use occurs periodically under transmission lines on the site using Accord, Arsenal, and/or Roundup. No pesticides are used at the station. Controlled amounts of fertilizers are applied twice per year, Spring and Fall, as follows:

- To seven (7) acres of lawn around the Training Building (Area 14 on the site maps).
- To three (3) acres of a grassed field south of the warehouse area and across the roadway (Area 17).
- To eighteen (18) acres of lawn in the triangular section between the roadways at the northernmost end of area 19.
- To four (4) acres of lawn at the North Anna Nuclear Information Center (NANIC) in the north end of Area 20.
- To fourteen (14) acres of grassed fields across the roadway from the NANIC in the southern ends of areas 24 and 25.

OUTFALLS COVERED BY THIS PERMIT

Area 2A (Outfall 022): This is an area of approximately 52 acres, with approximately 7.1 acres of impervious area. Stormwater collected in the higher portion to the south, contractor shops, parking lots and the switch yard, flows into a drop grating to a culvert near the northeast corner of the switch yard and discharges into Lake Anna at outfall 022. The lower, more level portion includes a vehicle maintenance shop, a paint shop and part of an outdoor equipment laydown area. Stormwater runoff from the grassed portions of this area adjacent to the lake shore is generally sheet flow. Runoff form the graveled lots around the shops and laydown areas is collected in a swale which discharges at the 022 outfall along with flows from the culvert.

Area 2B (Outfall 023): This is a small area of approximately 6.0 acres. The only impervious area is the 0.09 acre storage building which is used for hazardous waste accumulation, with other miscellaneous storage. This storage building is constructed with a curbed foundation to contain any spillage and prevent any discharge outside the structure. Stormwater collected in the higher portion to the south flows into Lake Anna at Outfall 023. Stormwater runoff from the grassed portions of this area adjacent to the lake shore is generally sheet flow.

Area 3 (Outfall 024): A small drainage area of 9 acres with primarily sheet flow runoff of stormwater to Lake Anna. About 0.08 acre of paved impervious area. A portion of the laydown area, shared with Area 2A, has runoff through a drop culvert (sample point 024) under the roadway and into Lake Anna at Outfall 024.

Area 18 (Outfall 025): This 56 acre drainage area, with 4 acres of impervious area, includes a portion of the warehouse facilities, an outdoor laydown area, and some small utility buildings. Stormwater from the northern portion of this drainage area is conveyed

under the paved roadway via two culverts. The culvert to the west carries the smaller amount of stormwater flow which drains from open, grassed fields with no industrial activity. The culvert to the east was chosen as the sample point for Area 18 because it carries the collected drainage from the larger portion of the area, from the warehouse and laydown facilities, and would be more likely to contain any contaminants. Outfall 025 discharges stormwater from this drainage into the Waste Heat Treatment Facility.

Area 25 (Outfall 026): A 61 acre drainage with no impervious surface area. In the northern portion of Area 25, there is a site (labeled "slabs" on map) used for temporary exposed storage of miscellaneous material such as large concrete "dead weight" blocks for crane weight testing, small movable buildings, etc. This portion of the drainage area has runoff through a culvert under the roadway and into Lake Anna at Outfall 026. This culvert was selected as the sample point for Area 25; no industrial activities occur downstream. As with other lakeside areas, sections adjacent to the shoreline, north of the graveled roadway, have sheet flow runoff of stormwater.

Evaluation of other drainage areas

Area 1: All stormwater drainage is into the settling pond which discharges via Outfall 009 of the current VPDES permit.

Areas 4, 6, 7, 8, and 9: Predominantly impervious areas with administrative buildings, enclosed storage facilities, a cooling tower for bearing cooling water (in Area 4) and parking lots. No industrial activities or materials exposed to stormwater. No stormwaters with pollutants associated with industrial activity are expected to be discharged from these areas. Stormwater discharges flow into Lake Anna.

Area 5: A small area with sheet flow drainage to Lake Anna. The only activity in this area is the main sewage treatment plant which discharges into the discharge canal via Outfall 111.

Area 10 and 11: Predominantly impervious areas with administrative buildings, enclosed storage facilities, and parking lots. No industrial activities or materials exposed to stormwater. No stormwaters with pollutants associated with industrial activity are expected to be discharged from these areas. Stormwater drainage is into the discharge canal.

Area 12: No industrial activity exposed to stormwater. Drains into the discharge canal.

Area 13: Includes a portion of the warehouse area and maintenance shops. No industrial activity exposed to stormwater. Drains into the discharge canal.

Area 14: A predominantly natural, wooded area with some training buildings, recreational facilities, parking lots, roadways, a helicopter pad, and grassed areas in the northernmost section. No industrial activity. Drainage is into Lake Anna.

Area 15: A predominantly natural, wooded area with an instrument laboratory and small storage facilities. No industrial activity. Drainage is into Lake Anna.

Area 16: An area of generally sheet slow drainage into the discharge canal of Lake Anna. The area included recreational facilities, a security training facility with a firing range, parking lots, roadways, wooded areas, and grassed areas. No industrial activity.

Area 17: This area includes a portion of the warehouse facilities. No stormwaters with pollutants associated with industrial activity are expected to be discharged from this area. Stormwater drainage is primarily into the Waste Heat Treatment Facility with some sheet flow along the discharge canal.

Area 19: This area is mostly a natural, wooded area with a grassed portion in the northern section above the roadway. This section includes a storage structure for retired steam generators which is totally enclosed with no exposure to stormwater. No industrial activity. The spent nuclear fuel storage facility is presently under construction in this area. See the attached construction stormwater pollution prevention plan for this activity (Appendix 5).

Area 20: This area is mostly a natural, wooded area which includes the North Anna Nuclear Information Center (NANIC) in the northern section adjacent to the roadway. No industrial activity.

Area 24: This area is mostly a natural, wooded area which includes a landfill and a borrow pit in the northern portion. The landfill receives only sandblast materials, gravel , soil, and broken concrete and is not used for disposal of other wastes. An area adjacent to the landfill is used for the temporary storage of logs and mulch. No industrial activity.

Area 21, 22, 23, 26, 27, 28, and 29: These are wooded, undisturbed areas with natural drainage. No industrial activity.

Area 30: Stormwater at the main portion of the station encompassing the major components is collected and discharged to the discharge canal via Outfall 104 of the

current VPDES permit.

Area 31: Stormwater is collected and discharged to Lake Anna via Outfall 014 of the current VPDES permit.

Area 32: Stormwater is collected and discharged to Lake Anna via Outfall 013 of the current VPDES permit.

Exclusion Boundary: The Exclusion Boundary marks an established zone of owner control around the nuclear power units and was chosen as the limit of the area of consideration for this application. Although Virginia Power owns considerable amounts of property outside this boundary, there are no industrial activities or other sources of industrial stormwater contamination outside of those discussed above.