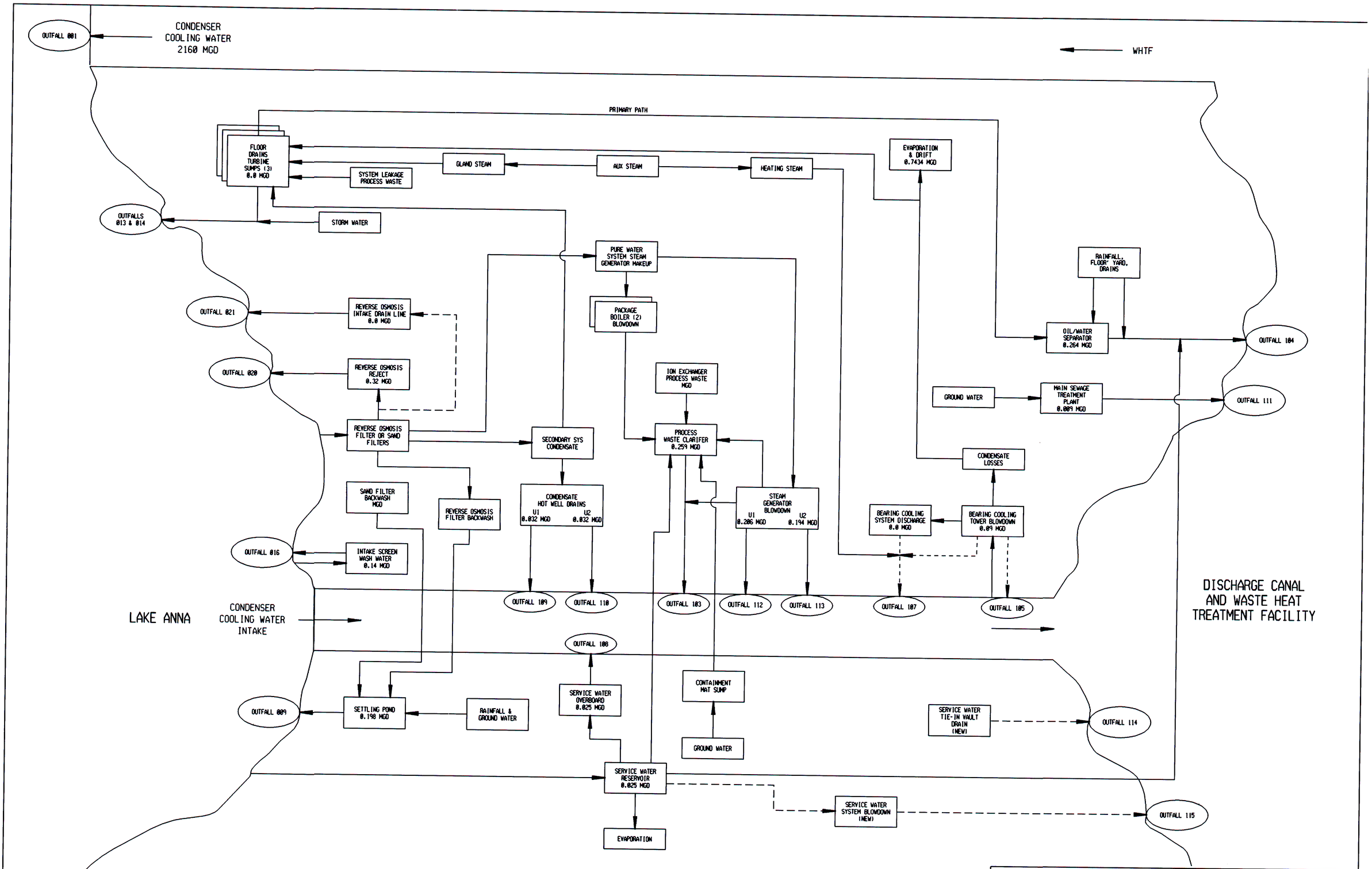

REV	DATE	DSGN	CHKD	ENGR	APPD	
1						DELETED FLASH EVAPORATORS AND DOMESTIC WATER OVERFLOW (101, 102 & 019); ADDED SERVICE WATER PIPE VAULT DRAIN OVERFLOW (114)

VIRGINIA POWER
NORTH CAROLINA POWER

NUCLEAR ENGINEERING SERVICES
RICHMOND, VIRGINIA

ONE LINE DIAGRAM STATION WATER FLOW NORTH ANNA POWER STATION

DSGN		CAD NO: C:\usr\dgn\OUTFLOW2DGNw31	
CHKD		DRAWING NO: NA-VPDES-083199-001	REV 1
ENGR			
APPD	SCALE:	UNLESS OTHERWISE NOTED	SH 1 OF 1

03-APR-2000 13:15
BROOKS I

D-3