March 23, 2000

LICENSEE: Duke Energy Corporation

FACILITY: Oconee Nuclear Station, Units 1, 2, and 3

SUBJECT: OCONEE NUCLEAR STATION, UNITS 1, 2, AND 3 RE: SUMMARY OF THE MARCH 16, 2000, MEETING ON HIGH PRESSURE INJECTION SYSTEM PROPOSED TECHNICAL SPECIFICATION CHANGES

On March 16, 2000, the NRC met at the NRC headquarters in Rockville, Maryland, with representatives of the Duke Energy Corporation staff to discuss information needed by the staff to continue our review of proposed changes to the Oconee Nuclear Station, Units 1, 2, and 3, Technical Specifications (TS) for the High Pressure Injection (HPI) System. Enclosure 1 is a list of the individuals who attended the meeting and Enclosure 2 is the handout material that was supplied by DEC.

The topics discussed included the following subjects as they related to the HPI TS submittal: the Emergency Operating Procedure Project, validation process, Atmospheric Dump Valves operation and exercise scenario results, loss of shutdown margin, shift staffing, Time Critical Operator Action matrix, changes to the Selected Licensee Commitment Manual, operator responsibilities, impact of potential operator errors, relationship of turbine bypass system, common cause failures, Configuration Risk Management, loss of coolant accident initiated sequences relationship to large early release frequency, Probability Risk Assessment, and the importance of the proposed TS changes.

/RA/

David E. LaBarge, Senior Project Manager
Project Directorate II-2
Division of Reactor Projects - I/II
Office of Nuclear Reactor Regulation

Docket Nos. 50-269, 50-270 and 50-287

Enclosures: 1. Attendance List
2. DEC Handout

cc w/encls: See next page

DOCUMENT NAME: G:\PDII-1\OCONEE\mtg sum 0316.wpd **Distribution: See next page**

To receive a copy of this document, indicate in the box C=Copy w/o attachment/enclosure E=Copy with attachment/enclosure N = No copy

OFFICE	PDII-1/PM		PDII-1/LA		PDII-1/SC					
NAME	DLaBarge:mw		CHawes CMH		REmch RLE					
DATE	3/22/00		3/22/00		3/22/00					

OFFICIAL RECORD COPY

Template - NRR-111

Meeting Summary dated March 23, 2000

HARD COPY
File Center
PUBLIC
PDII-1 Reading
DlaBarge
OGC
ACRS

E-MAIL
J. Zwolinski/S. Black
H. Berkow
R. Emch
C. Hawes
N. Gilles
M. Reinhart
J. O'Neal
D. Desaulniers
S. Peterson, EDO
C. Ogle, RII

UNITED STATES
NUCLEAR REGULATORY COMMISSION
WASHINGTON, D.C. 20555-0001

March 23, 2000

LICENSEE: Duke Energy Corporation

FACILITY: Oconee Nuclear Station, Units 1, 2, and 3

SUBJECT: OCONEE NUCLEAR STATION, UNITS 1, 2, AND 3 RE: SUMMARY OF THE MARCH 16, 2000, MEETING ON HIGH PRESSURE INJECTION SYSTEM PROPOSED TECHNICAL SPECIFICATION CHANGES

On March 16, 2000, the NRC met at the NRC headquarters in Rockville, Maryland, with representatives of the Duke Energy Corporation staff to discuss information needed by the staff to continue our review of proposed changes to the Oconee Nuclear Station, Units 1, 2, and 3, Technical Specifications (TS) for the High Pressure Injection (HPI) System. Enclosure 1 is a list of the individuals who attended the meeting and Enclosure 2 is the handout material that was supplied by DEC.

The topics discussed included the following subjects as they related to the HPI TS submittal: the Emergency Operating Procedure Project, validation process, Atmospheric Dump Valves operation and exercise scenario results, loss of shutdown margin, shift staffing, Time Critical Operator Action matrix, changes to the Selected Licensee Commitment Manual, operator responsibilities, impact of potential operator errors, relationship of turbine bypass system, common cause failures, Configuration Risk Management, loss of coolant accident initiated sequences relationship to large early release frequency, Probability Risk Assessment, and the importance of the proposed TS changes.

David E. LaBarge, Senior Project Manager
Project Directorate II-2
Division of Reactor Projects - I/II
Office of Nuclear Reactor Regulation

Docket Nos. 50-269, 50-270 and 50-287

Enclosures: 1. Attendance List
2. DEC Handout

cc w/encls: See next page

Oconee Nuclear Station

cc:
Ms. Lisa F. Vaughn
Legal Department (PBO5E)
Duke Energy Corporation
422 South Church Street
Charlotte, North Carolina 28201-1006

Anne W. Cottingham, Esquire
Winston and Strawn
1400 L Street, NW
Washington, DC 20005

Mr. Rick N. Edwards
Framatome Technologies
Suite 525
1700 Rockville Pike
Rockville, Maryland 20852-1631

Manager, LIS
NUS Corporation
2650 McCormick Drive, 3rd Floor
Clearwater, Florida 34619-1035

Senior Resident Inspector
U. S. Nuclear Regulatory
Commission
7812B Rochester Highway
Seneca, South Carolina 29672

Virgil R. Autry, Director
Division of Radioactive Waste Management
Bureau of Land and Waste Management
Department of Health and Environmental
Control
2600 Bull Street
Columbia, South Carolina 29201-1708

Mr. William R. McCollum, Jr.
Vice President, Oconee Site
Duke Energy Corporation
7800 Rochester Highway
Seneca, SC 29672

Mr. L. E. Nicholson
Compliance Manager
Duke Energy Corporation
Oconee Nuclear Site
7800 Rochester Highway
Seneca, South Carolina 29672

Ms. Karen E. Long
Assistant Attorney General
North Carolina Department of
Justice
P. O. Box 629
Raleigh, North Carolina 27602

Mr. Jeffrey Thomas
Manager - Nuclear Regulatory
Licensing
Duke Energy Corporation
526 South Church Street
Charlotte, North Carolina 28201-1006

Mr. Richard M. Fry, Director
Division of Radiation Protection
North Carolina Department of
Environment, Health, and
Natural Resources
3825 Barrett Drive
Raleigh, North Carolina 27609-7721

Mr. Steven P. Shaver
Senior Sales Engineer
Westinghouse Electric Company
5929 Carnegie Blvd.
Suite 500
Charlotte, North Carolina 28209

List of Attendees

NAME	AFFILIATION
William W. Foster	Duke Power
Larry E. Nicholson	Duke Power
Duncan Brewer	Duke Power
Ed Burchfield	Duke Power
Mike Barrett	Duke Power
William McIntyre	Duke Power
Reene' Gambrell	Duke Power
Nanette Gilles	NRC/NRR/RTSB
Mark Reinhart	NRC/NRR/DSSA/SPSB
Dan O'Neal	NRC/NRR/DSSA/SPSB
Rich Emch	NRC/DLPM
David LaBarge	NRC/DLPM
David Desaulniers	NRC/DIPM/IOLB

Enclosure 1

High Pressure Injection System Request For Additional Information

Duke Energy Corporation

March 16, 2000

Enclosure 2

Human Factors Aspect

- Emergency Operating Procedure Project
- Validation Process
- Atmospheric Dump Valves
- Feeding EFW to raise Steam Generator's to Loss of Sub-cooling Margin Setpoint

Risk Aspect

- Turbine Bypass System
- Common Cause Failures
- Configuration Risk Management Program
- Large Early Release Probability for Steam Generator Tube Rupture and SBLOCA
- HPI RAW < 2

Emergency Operating Procedure Project

- Integrated Evaluation of EOPs
- Streamlined Procedures
  - Immediate manual actions - Two column format to minimize time used to perform, steps and contingencies memorized
  - Specific Rules - Laminated, mounted on control panel, implemented anytime symptom is recognized

Emergency Operating Procedure Project

- Time Critical Operator Actions
- Plant Walkdowns (ladders/locks/labels/lighting)
- Detailed Simulator Validation

Verification and Validation Process

- Verifies both written correctness & technical accuracy
- Table-Top validation used where equipment access not practical
- Walk-through validation used to conduct step-by-step enactment of actions
- Simulator validation to create dynamic reproduction of actual responses & actions

Verification and Validation Process

	VALIDATION METHODS		
CHARACTERISTIC TO BE VALIDATED	Simulator	Walk-Through	Table-Top
Procedure information for management of the emergency condition is sufficient & consistent with training	X	X	X
Procedure information is easily comprehensible	X	X	X
Compatible with control room hardware	X	X	
Compatible with remotely located hardware & response	X	X	
Compatible with shift manning levels & policies	X	X	
Compatible with plant response	X		
Accessibility		X	

Minimum Shift Staffing

- Evaluated as part of EOP Project
- Developed Time Critical Operator Action Matrix
  - Being incorporated into Design Basis Document
- Implemented as a Selected Licensee Commitment
  - 50.59 required to change
- SLC will be revised to require additional staff during operation in Condition B.
- Long term initiatives should allow deleting requirement for additional staff

Non-licensed Operator Response

- Staffing margin available
- All NLOs report to affected unit
- TBVs primary means for heat transfer, high reliability
- ADVs on turbine deck just outside CR
- Procedures located at valve
- Entire site, including NLOs, aware of situation
  - 75% power with HPI pump OOS

Atmospheric Dump Valve Operation

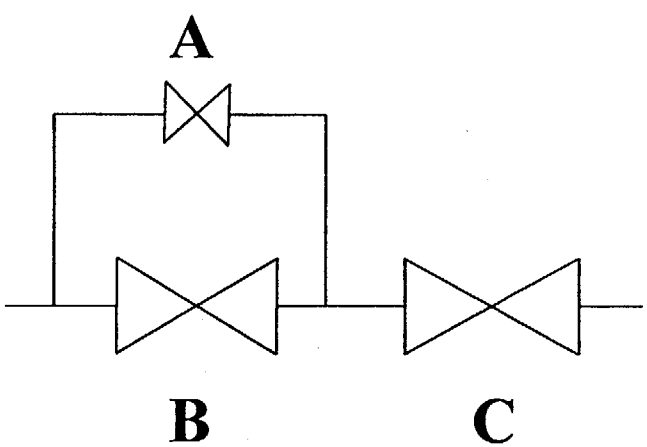

- Procedure Sequence
  - Open Valve "A"
  - Open Valve "B"
  - When Directed, Open Valve "C"

Minimal Impact of Operator Error

- Adequate time to respond
- Simple, straightforward evolution
  - All 3 valves located together
  - Adequately labeled
- Dispatching 2 operators provides for peer checking
- Evolution incorporated in training JPM
- Success requires only 1 of 2 possible flow paths

ADV Scenario Results

- Required within 25 minutes
- 6 of 6 crews met required time
- 6 of 6 crews accomplished within 21 minutes
- Average time ≈19 minutes
- All operators to be exercised during implementation

Feeding EFW to Raise Steam Generator levels to Loss of Sub-cooling Margin Setpoint

- Required within 20 minutes
- 6 of 6 crews met required time
- 5 of 6 crews accomplished within 14 minutes
- 1 outlier crew accomplished within 18 minutes
- All operators to be exercised during implementation

Turbine Bypass System

- TBS availability historically very good
  - Unavailable twice during 50 trips that occurred from 1/1/88 through 12/31/98, both due to power supply failure; backup power supply since installed
- HPI/TBS to be monitored via Oram-Sentinel
- Red condition
  - Key safety function immediately and directly threatened
  - PORC required to proceed

Common Cause Failures

- The potential for common cause failure of redundant components should be considered in the risk evaluation of the technical specification condition when corrective maintenance is the reason for entry
- Application of the common cause failure probability to the unaffected components for the duration of the AOT is overly conservative

Common Cause Failures

- Following failure of an HPI component, the operability evaluation for the remaining components does consider the common cause implications of the failure
- A more appropriate time period to assume the elevated failure probability is 72 hours
  - Time period for operability evaluation
  - Most common cause failures are readily identifiable

Common Cause Failures

- NRC AEOD/INEEL Common Cause Database contains 105 events with common cause implications for HPI systems
  - 20% involved degradation but no failures
  - 20% involved causes with obvious implications for the other trains
  - 50% involved causes easily detected through operability evaluation
  - Only 10% had causes that were difficult to determine
- If 10% of HPI failures are assumed to have common cause implications, then only 1% of all HPI failures are likely to involve an unidentified common cause issue for the remaining components

Configuration Risk Management

- The CRMP (WPMs 607, 608, and 609) establishes the process by which the plant staff reviews the risk significance of component unavailabilities
- The SENTINEL software allows the plant staff to investigate the risk significance of multiple component unavailabilities

Configuration Risk Management

- The SENTINEL library of PRA results includes the impact of the external event initiators, except seismic, in the results
- SENTINEL Safety Function Assessment Trees (SFATs) are used to evaluate the impact when containment related SSCs are removed from service
- Through the use of SENTINEL, the CRMP is not limited to considering only pairs of equipment out of service

Configuration Risk Management SBLOCA

- The risk significance of the limiting SBLOCA is estimated to be low
- The same systems (HPI, LPI, LPSW) are required to mitigate the small LOCA regardless of the location
- With addition of the TBVs to SENTINEL, the assessments provided by the CRMP tools are judged to be acceptable

Incremental Large Early Release Frequency

- Small LOCA initiated sequences do not contribute to LERF in any meaningful way because they have no impact on the containment pressure control function and the early containment failure probability is very low

Incremental Large Early Release Frequency

- Steam Generator Tube Rupture initiated sequences do not contribute significantly to LERF
  - Release begins late, > 5 hours after initiation
  - Release fractions of I and Cs are too small, approximately 1%, to produce early fatalities
- LERF implications of the proposed License Amendment Request are insignificant

HPI System RAW < 2

- The treatment of the limiting small break LOCA in the HPI License Amendment Request, for condition C, is conservative because it does not consider the recovery potential afforded by the third HPI pump or cross-connect valves, HP-409 and HP-410

HPI System RAW < 2

- Though not included in the base case PRA for Oconee, a special case treatment for the limiting small break case has been conducted as a sensitivity study
- The sensitivity study results indicate that the limiting small LOCA is not a significant contributor to the estimated CDF for Oconee and that the ΔCDF when a train is placed in maintenance is approximately a 10% increase

HPI System RAW < 2

- The HPI design which includes 3 HPI pumps, and the capability to cross connect the discharge headers downstream of valves HP-26 and HP-27 reduces the significance of having a train OOS and keeps the RAW low

CLOSING

- Analysis is thorough and comprehensive
  - Deterministic
  - Probablistic
- Change justified based on low safety/risk significance
  - HPI System maintained in accordance with requirements of SBLOCA analysis
  - Assured flow via two trains following full power SBLOCA and single active failure
  - Defense-in-depth for mitigation of SBLOCA at power conditions < 75% RTP
- Avoid unnecessary and undesirable plant transients
- Success assured using reliable, diverse means

Loss Of SCM Actions

_____ 1. **IF** **AT ANY TIME** reactor power is ≤ 1%,

THEN perform the following:

_____ 1.1 **IF** ≤ 2 minutes have elapsed since the loss of SCM,

THEN trip all RCPs.

_____ 1.2 **IF** > 2 minutes have elapsed since the loss of SCM,

AND any RCP is still operating,

THEN perform the following:

_____ 1.2.1 **IF** RCP motor amps are stable and ≈ normal,

THEN trip all RCPs.

_____ 1.2.2 **IF** RCP motor amps are erratic or low,

THEN do **NOT** trip any RCPs.

2. Ensure the following valves are open:

_____ 1HP-24 (1A HPI BWST SUCTION)

_____ 1HP-25 (1B HPI BWST SUCTION)

_____ 1HP-26 (1A HP INJECTION)

_____ 1HP-27 (1B HP INJECTION).

_____ 2.1 **IF** both 1HP-24 and 1HP-25 are closed,

THEN ensure Rule # 3, "Piggyback Mode For 1HP-24 And 1HP-25 Failure" has been performed.

• • • CONTINUED ON REVERSE SIDE • • •

Loss Of SCM Actions

CAUTION: HPI Pump damage may occur if > 2 HPI pumps are operated with only one suction flow path from the BWST aligned.

3. Ensure all available HPI Pumps operating.

   _____ 1A HPI Pump

   _____ 1B HPI Pump

   _____ 1C HPI Pump

_____ 3.1 **IF** at least 2 HPI Pumps are operating,

THEN ensure adequate HPI header flow by performing the following:

_____ **IF** 1A HPI header flow is in the Unacceptable Region of Enclosure 7.2, "Required HPI Header Flow For Full HPI",

THEN open 1HP-410 (1HP-26 BYPASS).

_____ **IF** 1B HPI header flow is in the Unacceptable Region of Enclosure 7.2, "Required HPI Header Flow For Full HPI",

THEN open 1HP-409 (1HP-27 BYPASS).

_____ 3.2 **IF** **AT ANY TIME** only one HPI Pump is running in a header,

THEN limit HPI header flow to ≤ 475 gpm/pump (include seal injection).

_____ 4. Monitor and control Main or Emergency FDW flow as required.

_____ 5. **IF** TBVs **CANNOT** be controlled,

THEN dispatch two operators to perform Enclosure 7.7, "Operation Of The Atmospheric Dump Valves".

• • • **END** • • •