Duke Power
A Duke Energy Company

Gary R. Peterson
Vice President

Duke Power
Catawba Nuclear Station
4800 Concord Road
York, SC 29745
(803) 831-4251 OFFICE
(803) 831-3426 FAX

April 3, 2000

U.S. Nuclear Regulatory Commission
Attention: Document Control Desk
Washington, DC 20555-0001

Subject: Duke Energy Corporation
Catawba Nuclear Station Units 1 and 2
Docket Nos. 50-413 and 50-414
Emergency Plan Implementing Procedures

Please find enclosed for NRC Staff use and review the following Emergency Plan Implementing Procedure:

OP/0/A/6200/021, Operating Procedure for the Post Accident Liquid Sampling System II+ (Rev. 032)

SR/0/B/2000/001, Standard Procedure for Public Affairs Response to the Emergency Operations Facility (Rev. 002)

These revisions are being submitted in accordance with 10CFR 50.54(q) and do not decrease the effectiveness of the Emergency Plan Implementing Procedures or the Emergency Plan.

By copy of this letter, two copies of the above documents are being provided to the NRC, Region II.

If there are any questions, please call Tom Beadle at 803-831-4027.

Very truly yours,

Gary R. Peterson

Attachments

A045

xc (w/attachments):

L. A. Reyes
U.S. Nuclear Regulatory Commission
Regional Administrator, Region II
Atlanta Federal Center
61 Forsyth St., SW, Suite 23T85
Atlanta, GA 30303

(w/o attachments):

C. P. Patel
NRC Senior Project Manager (CNS)
U.S. Nuclear Regulatory Commission
Mail Stop O-8 H12
Washington, DC 20555-0001

D. J. Roberts
Senior Resident Inspector (CNS)
U.S. Nuclear Regulatory Commission
Catawba Nuclear Site

DUKE POWER COMPANY
CATAWBA NUCLEAR STATION
EMERGENCY PLAN IMPLEMENTING PROCEDURES INDEX

VOLUME I

PROCEDURE	TITLE
RP/0/A/5000/001	Classification of Emergency (Rev. 012)
RP/0/A/5000/002	Notification of Unusual Event (Rev. 033)
RP/0/A/5000/003	Alert (Rev. 035)
RP/0/A/5000/004	Site Area Emergency (Rev. 037)
RP/0/A/5000/005	General Emergency (Rev. 037)
RP/0/A/5000/06	Deleted
RP/0/A/5000/006 A	Notifications to States and Counties from the Control Room (Rev. 010)
RP/0/A/5000/006 B	Notifications to States and Counties from the Technical Support Center (Rev. 010)
RP/0/A/5000/006 C	Notifications to States and Counties from the Emergency Operations Facility (Rev. 010)
RP/0/A/5000/007	Natural Disaster and Earthquake (Rev. 017)
RP/0/A/5000/08	Deleted
RP/0/B/5000/008	Spill Response (Rev. 016)
RP/0/A/5000/009	Collision/Explosion (Rev. 005)
RP/0/A/5000/010	Conducting A Site Assembly or Preparing the Site for an Evacuation (Rev. 013)
RP/0/A/5000/11	Deleted
RP/0/B/5000/12	Deleted
RP/0/B/5000/013	NRC Notification Requirements (Rev. 023)
RP/0/B/5000/14	Deleted
RP/0/A/5000/015	Core Damage Assessment (Rev. 004)
RP/0/B/5000/016	Deleted
RP/0/B/5000/17	Deleted

DUKE POWER COMPANY
CATAWBA NUCLEAR STATION
EMERGENCY PLAN IMPLEMENTING PROCEDURES INDEX

VOLUME I

PROCEDURE	TITLE
RP/0/A/5000/018	Emergency Worker Dose Extension (1/15/96)
RP/0/B/5000/019	Deleted
RP/0/A/5000/020	Technical Support Center (TSC) Activation Procedure (Rev. 012)
RP/0/A/5000/021	Deleted
RP/0/B/5000/022	Evacuation Coordinator Procedure (Rev. 003)
RP/0/B/5000/023	Deleted
RP/0/A/5000/024	OSC Activation Procedure (Rev. 006)
RP/0/B/5000/025	Recovery and Reentry Procedure (Rev. 002)
RP/0/B/5000/026	Response to Bomb Threat (5/30/96)
RP/0/B/5000/028	Communications and Community Relations EnergyQuest Emergency Response Plan (Rev. 000)

DUKE POWER COMPANY
CATAWBA NUCLEAR STATION
EMERGENCY PLAN IMPLEMENTING PROCEDURES INDEX

VOLUME II

PROCEDURE	TITLE
HP/0/B/1000/006	Emergency Equipment Functional Check and Inventory (Rev. 053)
HP/0/B/1009/001	Radiation Protection Recovery Plan (Rev. 007)
HP/0/B/1009/003	Radiation Protection Response Following a Primary to Secondary Leak (Rev. 008)
HP/0/B/1009/004	Environmental Monitoring for Emergency Conditions Within the Ten-Mile Radius of CNS (Rev. 027)
HP/0/B/1009/005	Personnel/Vehicle Monitoring for Emergency Conditions (Rev. 016)
HP/0/B/1009/006	Alternative Method for Determining Dose Rate Within the Reactor Building (Rev. 008)
HP/0/B/1009/007	In-Plant Particulate and Iodine Monitoring Under Accident Conditions (Rev. 018)
HP/0/B/1009/008	Contamination Control During Transportation of Contaminated Injured Individuals (Rev. 014)
HP/0/B/1009/009	Guidelines for Accident and Emergency Response (Rev. 038)
HP/0/B/1009/014	Radiation Protection Actions Following an Uncontrolled Release of Radioactive Material (Rev. 008)
HP/0/B/1009/016	Distribution of Potassium Iodide Tablets in the Event of a Radioiodine Release (Rev. 010)
HP/0/B/1009/017	Deleted
HP/1/B/1009/017	Post-Accident Containment Air Sampling System (Rev. 001)
HP/2/B/1009/017	Post-Accident Containment Air Sampling System (Rev. 000)
HP/0/B/1009/018	Deleted
HP/0/B/1009/019	Emergency Radio System Operation, Maintenance and Communication (Rev. 010)
HP/0/B/1009/024	Implementing Procedure for Estimating Food Chain Doses Under Post-Accident Conditions (Rev. 002)

DUKE POWER COMPANY
CATAWBA NUCLEAR STATION
EMERGENCY PLAN IMPLEMENTING PROCEDURES INDEX

VOLUME II

PROCEDURE	TITLE
HP/0/B/1009/025	Deleted
HP/0/B/1009/026	On-Shift Offsite Dose Projections (Rev. 002)
SH/0/B/2005/001	Emergency Response Offsite Dose Projections (Rev. 001)
SH/0/B/2005/002	Protocol for the Field Monitoring Coordinator During Emergency Conditions (Rev. 000)
OP/0/A/6200/021	Operating Procedure for Post Accident Liquid Sampling System II+ (Rev. 032)
SR/0/B/2000/001	Standard Procedure for Public Affairs Response to the Emergency Operations Facility (Rev. 002)
SR/0/B/2000/002	Standard Procedure for EOF Commodities and Facilities (Rev. 001)
SR/0/B/2000/003	Activation of the Emergency Operations Facility (Rev. 003)

(R06-97)

Duke Power Company

PROCEDURE PROCESS RECORD

(1) ID No. OP/0/A/6200/021

Revision No. 32

PREPARATION

(2) Station **Catawba Nuclear Station**

(3) Procedure Title **Operating Procedure for the Post Accident Liquid Sampling System II +**

(4) Prepared By Edgar Bynum Greene Date 3-7-00

(5) Requires 10CFR50.59 evaluation?

☑ Yes (New procedure or revision with major changes)

☐ No (Revision with minor changes)

☐ No (To incorporate previously approved changes)

(6) Reviewed By Mark J Prost (QR) Date 3-7-00

Cross-Disciplinary Review By _____ (QR) NA MJP Date _____

Reactivity Mgmt. Review By _____ (QR) NA MJP Date _____

(7) Additional Reviews

Reviewed By _____ Date _____

Reviewed By _____ Date _____

(8) Temporary Approval (*if necessary*)

By _____ (SRO/QR) Date _____

By _____ (QR) Date _____

(9) Approved By J. Carson Taylor Date 3-15-00

PERFORMANCE (Compare with Control Copy every 14 calendar days while work is being performed.)

(10) Compared with Control Copy _____ Date _____

Compared with Control Copy _____ Date _____

Compared with Control Copy _____ Date _____

(11) Date(s) Performed _____

Work Order Number (WO#) _____

COMPLETION

(12) Procedure Completion Verification

☐ Yes ☐ NA Check lists and/or blanks initialed, signed, dated, or filled in NA, as appropriate?

☐ Yes ☐ NA Listed enclosures attached?

☐ Yes ☐ NA Data sheets attached, completed, dated, and signed?

☐ Yes ☐ NA Charts, graphs, etc. attached, dated, identified, and marked?

☐ Yes ☐ NA Procedure requirements met?

Verified By _____ Date _____

(13) Procedure Completion Approved _____ Date _____

(14) Remarks (*Attach additional pages, if necessary.*)

Duke Power Company Catawba Nuclear Station **Operating Procedure for the Post Accident Liquid Sampling System II+** **Multiple Use**	Procedure No. OP/0/A/6200/021 Revision No. 032 Electronic Reference No. CN005FEI

Operating Procedure for the Post Accident Liquid Sampling System II+

1. Purpose

The purpose of the Post Accident Liquid Sampling System (PALSS) is to provide the capability of promptly obtaining a reactor coolant sample under nuclear reactor accident conditions in accordance with NUREG-0737 and Technical Specification 5.5.4.

Samples acquired during accident conditions when normal sampling is **NOT** feasible will aid in the evaluation of the following:

- The extent of core damage that has already occurred.
- Types and quantities of fission products released into the reactor coolant.
- Reactor coolant chemistry and radiochemistry.

This procedure is also used in periodic testing.

2. Limits and Precautions

2.1 **WHEN** a revision is made to this procedure, a copy of the approved revision shall be sent to the Station Emergency Planner in Compliance.

2.2 In an accident situation the initial decision to collect a post accident sample will originate from either the Technical Support Center (TSC) or the Emergency Operations Facility (EOF). The final decision to send individuals to pull a PALSS sample will be made with input from the Chemistry Manager, Reactor Engineer, RP, and Operations. Management involved in the decision shall take two factors into consideration before initiating a post accident sample. These are as follows:

- Has the situation stabilized to a degree so as to minimize the risk involved to the individuals sampling?
- From the present information available, has the reactor coolant system stabilized to a degree that a representative sample can be obtained?

2.3 The PALSS panel should only be operated under one or more of the following circumstances:

- The Site Nuclear Engineering Group has requested the panel be placed in service for the purpose of core damage assessment.
- Primary sampling (NM) system sinks are inaccessible due to radiation levels or for other identified reasons.
- The Chemistry Manager or designee has requested that the PALSS panel be put in service.

- The PALSS panel is being run for operational verification, maintenance, or training purposes.
- Use of the normal Primary Sampling (NM) will create a radiation exposure problem in the NM lab.
- The normal Primary Sampling (NM) is unavailable and the sample has to be pulled via PALSS to meet Tech Spec requirements.

2.4 Ensure there are no outstanding R and R tagouts on this panel. Sometimes the PALSS II + panel can be operated with certain outstanding tagouts on supporting systems. Consult the PALSS Test Coordinator on these tagouts.

2.5 PALSS will be considered inoperable for the following reasons:

- PALSS instrumentation out of service
- YM, VI, or KC supply to PALSS tagged closed
- **IF** 1KXPB # 34, 1KXPB # 36, 2KXPB # 34, and/or 2KXPB # 36 are in the "OPEN" position
- **IF** the PALSS Test Coordinator determines a failure challenges the ability to meet PALSS Acceptance Criteria.

2.6 Enclosures of this procedure can be run non-sequentially separately if all of the initial conditions are met in that enclosure.

2.7 During troubleshooting periods on this panel, deviation from this procedure can be done as long as it is in accordance with NSD 704 (Procedure Use and Adherence) and is documented appropriately.

2.8 There are several repetitive initial conditions in this procedure (Limits and Precautions ", "The R&R ..."). **IF** this procedure is completed as one procedure and **NOT** as separate individual enclosures, the procedure user should sign the repetitive initial condition steps only once for the first enclosure the steps are encountered.

2.9 The following valves serve safety related equipment and are locked closed to comply with Technical Specification 3.7.7 when **NOT** in use to supply component cooling water to the PALSS panel.

1KC-D03	2KC-D03
1KC-D04	2KC-D04
1KC-D05	2KC-D05
1KC-D06	2KC-D06

These valves are required to be locked closed and/or inspected once per 31 days to verify that they are in the correct position. The Operations group performs this inspection.

2.10 During an accident situation, Radiation Protection (RP) personnel from the Operations Support Center (OSC) shall:

- Monitor all personnel entering the Auxiliary Building.
- Perform continuous radiation levels monitoring while sampling at the PALSS panel.

2.11 The sample loop will be flushed with demineralized water into a sample bottle. Any further dilutions can be performed in the Hot Lab.

- The sample loop volumes for Unit-1 and Unit-2 are 100 µl, 1.0 ml and 5.0 ml.

2.12 Sample loop volumes as supplied by the manufacturer are nominal and should be verified. Replacement of sample loops(s) may require a procedure revision to indicate the specific volume of the new loop(s) in order to ensure the accuracy of analysis.

2.13 The PALSS panel waste will be routed to the Volume Control Tank (VCT) during accidents and emergency conditions. The PALSS panel waste will be routed to the Waste Evaporator Feed Tank (WEFT) Sump during periodic testing and training. The Unit-1 waste will go to WEFT Sump A and the Unit- 2 waste will go to the WEFT Sump B.

2.14 **WHEN** handling radioactive samples good laboratory practices are essential to prevent radioactive contamination of personnel, equipment and physical structures. Reference applicable SRWP's, RWP's and the Chemistry Management Procedure 2.2.8 (Personnel Conduct in Contaminated Work Areas).

2.15 Information pertinent for performing diagnostic assessment on the PALSS II+ panel can be found in Enclosure 4.25 (PALSS Control Panel/Sample Panel General Equipment Information).

2.16 For any item on the control or sample panel, refer to Enclosure 4.24 (Flow Diagrams and Drawings).

2.17 Due to the nature of this procedure, a working copy shall be used to ensure compliance.

2.18 Rheodyne valves require at least 40 psig for proper operation.

2.19 Operations in this procedure may affect reactivity management. Where applicable, specific instructions will be given. {NSD 304}

3. Procedure

Perform Enclosure 4.1 through 4.25 as necessary.

4. Enclosures

4.1 Controlling Procedure for an Accident Situation

4.2 Operations Support Center Activation

4.3 Laboratory Preparation

4.4 Unit 1 KC Valve Alignment

4.5 Unit 2 KC Valve Alignment

4.6 Panel Preparation

4.7 Start Up and Checkout

4.8 Calibration of the PALSS pH Meter

4.9 pH Housing and Gas Tank Evacuation

4.10 NM System Isolation

4.11 Reactor Coolant System (NC) or Residual Heat Removal (ND) System Sample Flush and Trap

4.12 Gas Collection

4.13 Sample pH Measurement

4.14 System Flush

4.15 Liquid and Gas Sample Retrieval

4.16 Gas Tank Nitrogen Purge

4.17 System Shutdown

4.18 Sample Analysis (Accident Situation)

4.19 Sample Analysis (Non-Accident Situation)

4.20 PALSS Inlet Filter/Strainer Backflush

4.21 Monthly Calibration of PALSS pH Meter

4.22 Unit 1KC Valve Alignment During Microbiocide Addition

4.23 Unit 2 KC Valve Alignment During Microbiocide Addition

4.24 Flow Diagrams and Drawings

4.25 PALSS Control Panel/Sample Panel General Equipment Information

Continuous Use

1. Initial Conditions

_____ _____ 1.1 This enclosure will be used for all data recording.
Date

_____ _____ 1.2 Limits and Precautions of this procedure have been reviewed and any conflicts found have been addressed and resolved.
Date

_____ _____ 1.3 The R&R and Auto Logs have been reviewed, evaluated, and determined to allow operation.
Date

2. Procedure

_____ _____ 2.1 Perform Enclosure 4.2 (Operations Support Center Activation)
Date

Operations Contact _____KC Train_____

System to be sampled (circle one)

Unit I NC-A NC-C ND-A ND-B

Unit II NC-A NC-C ND-A ND-B

Designated Sample Loop(s) (circle one) 5 ml 1 ml 100 µl

Requested Analyses

Boron (duplicate - low level)	_____	100 ml
Chlorides	_____	100 ml
Liquid Ge-Li	_____	10 ml
pH (done within the panel)	_____	0 ml
other	_____	ml
other	_____	ml
other	_____	ml
total volume	_____	ml

Chemistry Manager phone number_____

Continuous Use

Comments:_____

_____

_____

_____ _____ 2.2 Perform Enclosure 4.4 (Unit 1 KC Valve Alignment) or Enclosure 4.5 (Unit 2 KC Valve Alignment).
Date

PALSS start time _____

_____ _____ 2.3 Perform Enclosure 4.6 (Panel Preparation)
Date

_____ _____ 2.4 Perform Enclosure 4.8 (Calibration of the PALSS pH Meter)
Date

_____ _____ 2.5 Perform Enclosure 4.9 (pH Housing and Gas Tank Evacuation)
Date

PG-4 or 5 Pressure (pH Housing and Gas Tanks)_____ psia

PG-4 or 5 Pressure (pH Housing and Gas Tanks)_____ psia

PG-4 or 5 Pressure (30 ml and 500 ml Gas tanks)_____ psia

_____ _____ 2.6 Perform Enclosure 4.10 (NM System Isolation)
Date

_____ _____ 2.7 Perform Enclosure 4.11 (Reactor Coolant System (NC) or Residual Heat Removal (ND) System Sample Flush and Trap).
Date

FG-1 Flowrate	_____	gpm
PG-3 System Pressure	_____	psig
TE-2 Final Temperature	_____	°F
Initial PG-1 Liquid Tank Pressure	_____	psig
Gas Sample Trap Time	_____	
Final PG-1 Liquid Tank Pressure	_____	psig
FG-2 Rheodyne Sample Loop Flowrate	_____	ml/min
PG-1 Rheodyne Sample Loop Pressure	_____	psig
Rheodyne Sample Loop Trap Time	_____	

Continuous Use

_____ _____ 2.8 Perform Enclosure 4.12 (Gas Collection)
Date

	PG-4 / PG-5
500 ml Gas Tank Pressure	_____/_____psia
30 ml Gas Tank Pressure	_____/_____psia
TG-2 Temperature (Initial)	_____ °F
TG-2 Temperature (Final)	_____ °F
PG-4 Pressure (Final)	_____ psia
PG-5 Pressure (Final), if used	_____ psia

_____ _____ 2.9 Perform Enclosure 4.13 (Sample pH Measurement)
Date

PG-1 Pressure _____psig (≥60 psig)

pH_____

_____ _____ 2.10 Perform Enclosure 4.14 (System Flush)
Date

_____ _____ 2.11 Perform Enclosure 4.15 (Liquid and Gas Sample Retrieval)
Date

_____ _____ 2.12 Perform Enclosure 4.16 (Gas Tank Nitrogen Purge)
Date

_____ _____ 2.13 Perform Enclosure 4.17 (System Shutdown)
Date

Continuous Use

_____ _____ 2.14 Perform Enclosure 4.18 (Sample Analysis Accident Situation)
Date

Hydrogen Concentration (cc/kg H_2) _____

Gamma Spectral Analysis (liquid) _____

Gamma Spectral Analysis (gas) _____

Boron Concentration (ppm) _____

Total Rheodyne Gamma Spectral Analysis _____

Chloride Concentration (ppb) _____

Dilution Factor _____

PALSS stop time _____

____ _____ 2.15 Report all results to Chemistry Manager in the OSC by phone, then Chemistry technician(s) should report to the OSC.

Reference Use

1. Initial Conditions

_____ Date _____ 1.1 Limits and Precautions of this procedure have been reviewed and any conflicts found have been addressed and resolved.

NOTE:	In order to expedite the sample and analysis, the Chemistry Supervisor or designee may send two (2) Chemistry technicians to collect the sample and perform the analysis.

_____ Date _____ 1.2 The R&R and Auto Logs have been reviewed, evaluated, and determined to allow operation.

2. Procedure

2.1 The Chemistry technician(s) chosen should be based on the following information:

a) Qualified on the Post Accident Liquid Sampling System (PALSS).

b) Respiratory qualified

c) Age

d) Accumulated exposure

e) Physical strength

Gender will **NOT** be used as a determining factor in deciding who will operate the PALSS panel or who will analyze the PALSS sample.

2.2 Individual Responsibilities List

Check (√) as completed.

NOTE:	• This section is split into two sections (PALSS Panel Operator and PALSS Laboratory Analyst), and can be performed by one or two people. • This section is to be used as a reminder list to the individuals involved. All steps must be completed, but do **NOT** have to be completed at the OSC.

2.2.1 PALSS Panel Operator

☐ 2.2.1.1 Notify Operations that waste from the panel will be routed to the Volume Control Tank (VCT).

Reference Use

☐ 2.2.1.2 Record the system to be sampled on Enclosure 4.1 (Controlling Procedure for An Accident Situation).

☐ 2.2.1.3 **IF** sampling NC (Reactor Coolant System):

Request permission from Operations to, open the following valves:

- 1NM-26B (2NM-26B) Hot Leg Sample Header Cont Isol
- 1NM-22A (2NM-22A) Hot Leg A Sample Cont Isol

OR

- 1NM-25A (2NM-25A) Hot Leg C Sample Cont Isol

NOTE:	The ND valves are **NOT** indicated in the Control Room, and can **NOT** be opened by the Control Room

☐ 2.2.1.4 **IF** sampling ND (Residual Heat Removal System):

Request Operations to turn the power on to the following valves:

Open 1NM-39 (2NM-39) ND Pump 1A (2A) Disch Smpl Line Isol

OR

1NM-40 (2NM-40) ND Pump 1B (2B) Disch Smpl Line Isol

☐ 2.2.1.5 Request from Operations Control Room which train of Component Cooling (KC) is operating and record on Enclosure 4.1 (Controlling Procedure For An Accident Situation).

☐ 2.2.1.6 Request an Operator At The Controls (OATC) to ensure the following functions have been reset:

Safety Injection (S.I.)
Phase A Isolation (LOCA)
Multi Switch (KC, NC, NI and NM)

Ensure power on ETA if sampling NC {PIP C-98-2310}

Reference Use

☐ 2.2.1.7 Contact the Chemistry Manager or designee on what sample loop shall be used for sampling and the appropriate analysis to be run. Record on Enclosure 4.1 (Controlling Procedure For An Accident Situation).

☐ 2.2.1.8 Request a phone number to contact the Chemistry Manager at the Operations Support Center. Record on Enclosure 4.1 (Controlling Procedure For An Accident Situation).

NOTE: There is an option to dress out in the OSC or in the change rooms depending on Radiation Protection and Chemistry's needs

☐ 2.2.1.9 Obtain the proper dress requirements from Radiation Protection.

☐ 2.2.1.10 Notify Radiation Protection that an escort to the PALSS Panel and continuous monitoring during the PALSS panel operation will be needed.

☐ 2.2.1.11 Ensure the required equipment to operate the PALSS panel is available:

- ☐ PALSS panel key
- ☐ KC valve key
- ☐ NM-393 key {PIP C-98-2886} {Mod CE-9417}
- ☐ NM-492 key
- ☐ Working copy of this procedure
- ☐ Shielded sample carrier
- ☐ 60 ml wide mouth bottle
- ☐ (4) 5cc gas tight locking syringes
- ☐ (3) glass sample bottle with septum cap
- ☐ 14 cc gas vial (evacuated and place in hood)
- ☐ Plastic bags
- ☐ Spare bulbs for panel
- ☐ Tool for bulb removal
- ☐ Black pen
- ☐ labels
- ☐ Time piece capable of measuring seconds

Reference Use

☐ 2.2.1.12 Assist Staff personnel in filling out the dispatch sheet.

NOTE: The respirator hoses and black box regulator are located in the Aux. Bldg Elev. 543' Room 248 in the locked cabinet near the PACS panel (combination #5572) to be used with VB.

☐ 2.2.1.13 Complete Enclosure 4.4 (Unit 1 KC Valve Alignment) or Enclosure 4.5 (Unit 2 KC Valve Alignment).

☐ 2.2.1.14 Obtain respirators for Chemistry and Radiation Protection, if necessary.

NOTE: Radiation Protection will survey the appropriate areas before Chemistry accesses the rooms.

☐ 2.2.1.15 The PALSS panel operator can complete Enclosure 4.4 (Unit 1 KC Cooling Valve Alignment), or Enclosure 4.5 (Unit 2 KC Cooling Valve Alignment) and start Enclosure 4.6 (Panel Preparation) and Enclosure 4.7 (Start-Up and Checkout) while Radiation Protection sets up VB.

☐ 2.2.1.16 Hook up to VB after it is set up.

☐ 2.2.1.17 Run PALSS per procedure. Thirty minutes prior to obtaining sample, call second technician, if available, to pick up sample.

☐ 2.2.1.18 Transport samples to Hot Lab if second technician is **NOT** available.

☐ 2.2.1.19 Complete Enclosure 4.17 (System Shutdown) and verify that all KC valves are in the position indicated in the procedure.

NOTE: KC valves 1KCD03 (2KCD03), 1KCD04 (2KCD04), 1KCD05 (2KCD05), and 1KCD06 (2KCD06) should be locked closed and chained.

☐ 2.2.1.20 Assist in the analysis, if necessary.

Reference Use

2.2.2 PALSS Laboratory Analyst

☐ 2.2.2.1 **IF** necessary, notify Radiation Protection for an escort to the Hot Lab and continuous monitoring during the PALSS sample analysis will be needed.

☐ 2.2.2.2 **IF** necessary, request a phone number to contact the Chemistry Manager at the Operations Support Center.

NOTE:	It is important to dilute your PALSS sample to an adequate volume to ensure enough samples for all of the analysis

☐ 2.2.2.3 Request from the Chemistry Manager what analysis needs to be run on the PALSS sample.

- Listed below are the prescribed analysis and volumes necessary:

Boron (duplicate - low level)	100 ml
Chlorides	100 ml
Liquid Ge-Li	10 ml
pH (is done within the panel)	0 ml
_____	ml
_____	ml
_____	ml
Total Volume	_____ ml

☐ 2.2.2.4 Inform the Count Room of the PALSS run.

☐ 2.2.2.5 Travel to the Hot Lab to set up the laboratory instruments.

☐ 2.2.2.6 Ensure reagents have **NOT** expired and that there is sufficient to complete analysis.

☐ 2.2.2.7 Perform required quality control standards.

☐ 2.2.2.8 Obtain appropriate respirators.

☐ 2.2.2.9 Dress out appropriately.

☐ 2.2.2.10 Put on appropriate respirator when called.

☐ 2.2.2.11 Take shielded carrier to 543 elevation.

Reference Use

- ☐ 2.2.2.12 Place the liquid and gas samples in the carrier.
- ☐ 2.2.2.13 Return to the Hot Lab.
- ☐ 2.2.2.14 Analyze PALSS sample per requested parameters listed above.
- ☐ 2.2.2.15 Ensure proper dilution factor is used to calculate final NC system concentration.
- ☐ 2.2.2.16 Report results by phone to Chemistry Manager at Operations Support Center (OSC).
- ☐ 2.2.2.17 Return to OSC under guidance of RP.

Information Use

1. Initial Conditions

_____ Date _____ 1.1 Limits and Precautions of this procedure have been reviewed and any conflicts found have been addressed and resolved.

_____ Date _____ 1.2 The R&R and Auto Logs have been reviewed, evaluated, and determined to allow operation.

2. Procedure

Check (√) as completed.

NOTE: During diagnostic test runs this section may or may **NOT** be executed depending on the nature of the problem.

2.1 Laboratory Preparation

☐ 2.1.1 Evacuate the PALSS rheodyne sample bottles

2.1.1.1 Turn on the Vacuum pump under the NM sample hood or the Hot Lab.

2.1.1.2 Insert the needle on the vacuum line into the sample bottle septum.

2.1.1.3 Wait at least 1 minute for the sample bottle to evacuate or use vacuum gauge to verify adequate vacuum is obtained within the sample vial (leaving it on for a longer period will **NOT** affect the analysis).

2.1.1.4 Remove the sample bottle.

2.1.1.5 Repeat Steps 2.1.1.1 through 2.1.1.4 on a second/third bottle (if needed) and then proceed to the next step.

2.1.1.6 Turn off the vacuum pump.

Continuous Use

1. Initial Conditions

_____ Date _____ 1.1 The limits and precautions of this procedure have been reviewed and any conflicts found have been resolved.

_____ Date _____ 1.2 The R&R and Auto Logs have been reviewed, evaluated, and determined to allow operations.

2. Procedure

Check (√) as completed.

- For Unit 1 Train A Supply, complete Step 2.1.
- For Unit 1 Train B Supply, complete Step 2.2.

2.1 Unit-1 Train A Supply

☐ 2.1.1 Open 1-KC-D03 (ESS Sup HDR A PALSS Isol) (location AB-577-10, HH-54)

☐ 2.1.2 Ensure lock closed 1-KC-D04 (ESS Sup HDR B PALSS Isol) (location AB-577-10, HH-54)

☐ 2.1.3 Open 1-KC-D05 (ESS RTN HDR A PALSS Isol) (location AB-560-12, HH-55)

☐ 2.1.4 Ensure lock closed 1-KC-D06 (ESS RTN HDR B PALSS Isol) (location AB-560-12, HH-55)

2.2 Unit-1 Train B Supply

☐ 2.2.1 Ensure lock closed 1-KC-D03 (ESS Sup HDR A PALSS Isol) (location AB-577-10, HH-54)

☐ 2.2.2 Open 1-KC-D04 (ESS Sup HDR B PALSS Isol) (location AB-577-10, HH-54)

☐ 2.2.3 Ensure lock closed 1-KC-D05 SS RTN HDR A PALSS Isol) (location AB-560-12, HH-55)

☐ 2.2.4 Open 1-KC-D06 (SS RTN HDR B PALSS Isol) (location AB-560-12, HH-55)

Continuous Use

1. Initial Conditions

_____ Date _____ 1.1 The limits and precautions of this procedure have been reviewed and any conflicts found have been resolved.

_____ Date _____ 1.2 The R&R and Auto Logs have been reviewed, evaluated, and determined to allow operations.

2. Procedure

Check (√) as completed.

- For Unit 2 Train A Supply, complete Step 2.1.
- For Unit 2 Train B Supply, complete Step 2.2.

2.1 Unit-2 Train A Supply

☐ 2.1.1 Open 2-KC-D03 (ESS Sup HDR A PALSS Isol) (location AB-577-15, HH-JJ-59)

☐ 2.1.2 Ensure lock closed 2-KC-D04 (ESS Sup HDR B PALSS Isol) (location AB-577-15, HH-59)

☐ 2.1.3 Open 2-KC-D05 (ESS RTN HDR A PALSS Isol) (location AB-577-5,FF-58)

☐ 2.1.4 Ensure lock closed 2-KC-D06 (ESS RTN HDR B PALSS Isol) (location AB-577-5, FF-58)

2.2 Unit-2 Train B Supply

☐ 2.2.1 Ensure lock closed 2-KC-D03 (ESS Sup HDR A PALSS Isol) (location AB-577-15, HH-JJ-59)

☐ 2.2.2 Open 2-KC-D04 (ESS Sup HDR B PALSS Isol) (location AB-577-15, HH-59)

☐ 2.2.3 Ensure lock closed 2-KC-D05 (ESS RTN HDR A PALSS Isol) (location AB-577-5, FF-58)

☐ 2.2.4 Open 2-KC-D06 (ESS RTN Hdr B PALSS Isol) (Location AB-577-5, FF-58)

Continuous Use

1. Initial Conditions

_____ Date _____ 1.1 The limits and precautions of this procedure have been reviewed and any conflicts found have been resolved.

_____ Date _____ 1.2 The R&R and Auto Logs have been reviewed, evaluated, and determined to allow operations.

NOTE: The following sections may be completed in any order.

2. Procedure

Check (√) as completed.

2.1 Control Panel Preparation

NOTE: If any item on the control or sample panel is **NOT** clearly identified, refer to Enclosure 4.24 (Flow Diagrams and Drawings).

☐ 2.1.1 Ensure the valve power switch (SW-1) is in the "OFF" position.

☐ 2.1.2 Ensure the AC switch (KS-1) is in the" OFF" position.

☐ 2.1.3 Adjust Control Valve CV-401 to 0.0 on the control dial.

☐ 2.1.4 Adjust Control Valve CV-402 to 0.0 on the control dial.

NOTE: The green lights should be lit on PB-1 through PB-4 after executing the next step.

☐ 2.1.5 Insert the PALSS key into the AC switch (KS-1) and turn the system power "ON".

☐ 2.1.6 Turn "ON" the lamp test switch (SW-2) to ensure all lamps on the control panel are functioning.

2.1.6.1 Replace any lamps that do **NOT** light up.

☐ 2.1.7 Turn "OFF" the lamp test switch (SW-2).

☐ 2.1.8 Turn the valve power switch (SW-1) to the "ON" position.

Continuous Use

2.2 Sample Panel Preparation

NOTE: Nitrogen supply on both bottles should be at least 500 psig. Bottles should be replaced as necessary.

☐ 2.2.1 Ensure connected the nitrogen delivery line to the PALSS panel.

☐ 2.2.2 Ensure open the cylinder valve on top of the nitrogen cylinder.

CAUTION: Do **NOT** exceed 150 psig on nitrogen regulator. Exceeding 150 psig will cause 1 (2) NM-803 relief to open.

☐ 2.2.3 Ensure the setting of each Nitrogen Regulator is 110 psig.

☐ 2.2.4 Ensure control valve CV-612 (Dilution Water to Flush Sample Loop Valve) is in the "OFF" position.

☐ 2.2.5 Ensure control valve CV-613 (Nitrogen to Flush Sample Loop Valve) is in the "VENT" position.

2.2.6 Open or ensure open the following valves:

- ☐ CV-603 (Nitrogen Stripping Supply to Liquid Tank)
- ☐ CV-604 (Nitrogen Purge to Gas Tank)
- ☐ CV-606 (Air Supply to Sample Panel)

NOTE: This next valve supplies CV-101 through CV-107.

☐ 2.2.7 Ensure the three way Control Valve CV-609 (Nitrogen/Air Supply) is in the "AIR SUPPLY" position.

NOTE: This next valve supplies the purge gas for the panel

☐ 2.2.8 Ensure the three way Control Valve CV-610 (Nitrogen/Air Purge) is in the "NITROGEN SUPPLY" position.

Continuous Use

NOTE: The following gas regulating valves may be adjusted to fall within the correct ranges. PALSS Staff Support should be informed of any adjustments. If no adjustment is made, the 'Adjusted to' blank should be N/A'ed

☐ 2.2.9 Ensure gas-regulating valve CV-602 is set at 38 to 42 psig.

Actual _____ Adjusted to _____

☐ 2.2.10 Ensure gas-regulating valve CV-605 is set at 78 to 82 psig.

Actual _____ Adjusted to _____

☐ 2.2.11 Ensure gas-regulating valve CV-607 is set at 23 to 27 psig.

Actual _____ Adjusted to _____

☐ 2.2.12 Ensure gas-regulating valve CV-608 is set at 23 to 27 psig.

Actual _____ Adjusted to _____

☐ 2.2.13 Ensure gas regulating valve CV-611 is set at 80 - 86 inches (2 to 4 psig).

Actual _____ Adjusted to _____

☐ 2.2.14 Ensure open:

	Unit 1	Unit 2
PALSP Manual Isolation	1NM-805	2NM-805

☐ 2.2.15 Ensure open:

	Unit 1	Unit 2
PALSP Demin Water Manual Isolation	1YM-436	1YM-437

NOTE: This next valve should be capped.

☐ 2.2.16 Ensure closed:

	Unit 1	Unit 2
PALSP Inlet Vent Valve	1NM-806 (FF-54)	2NM-806 (FF-61)

Continuous Use

☐ 2.2.17 Observe initial KC flow as indicated on:

Unit 1	Unit 2
1KCPS9260	2KCPS9260
(FF-54)	(FF-61)

☐ 2.2.18 Open:

	Unit 1	Unit 2
PALSS Hx Inlet	1KCA-08	2KCA-08
	(FF-54)	(FF-61)

☐ 2.2.19 Open:

	Unit 1	Unit 2
PALSS Hx Outlet	1KCA-10	2KCA-10
	(FF-54)	(FF-61)

☐ 2.2.20 Ensure flow increase on:

Unit 1	Unit 2
1KCPS9260	2KCPS9260
(FF-54)	(FF-61)

2.3 Reverify the nitrogen regulator pressure to be at least 110 psig.

Continuous Use

1. Initial Conditions

_____ Date _____ 1.1 The limits and precautions of this procedure have been reviewed and any conflicts found have been resolved.

_____ Date _____ 1.2 Ensure Enclosure 4.6 (Panel Preparation) is complete.

_____ Date _____ 1.3 The R&R and Auto Logs have been reviewed, evaluated, and determined to allow operations.

2. Procedure

Check (√) as completed.

2.1 Base Parameters

☐ 2.1.1 Open SV-201 (PALSS Air Eductor Outlet Isolation) to atmospheric pressure.

☐ 2.1.2 Read and record the pressure on PG-4 in psia.

☐ 2.1.3 Open SV-203 (PALSS Low Range Gas Tank Pressure Isolation) to atmospheric pressure.

☐ 2.1.4 Read and record the pressure on PG-5 in psia.

☐ 2.1.5 Close SV-203 (PALSS Low Range Gas Tank Pressure Isolation)to atmospheric pressure.

☐ 2.1.6 Close SV-201 (PALSS Air Eductor Outlet Isolation) to atmospheric pressure.

2.2 Starting Temperatures

☐ 2.2.1 Move SS-1 to the "TE-1" position (F Heat Exchanger Inlet).

☐ 2.2.2 Read and record the temperature on TG-1.

☐ 2.2.3 Move SS-1 to the "TE-2" position (F Heat Exchanger Outlet).

☐ 2.2.4 Read and record the temperature on TG-1.

☐ 2.2.5 Move SS-1 to the "TE-3" position (F KC Inlet to Heat Exchanger).

☐ 2.2.6 Read and record the temperature on TG-1

Continuous Use

☐ 2.2.7 Move SS-1 to the "TE-4" position (F KC Outlet to Heat to Exchanger).

☐ 2.2.8 Read and record the temperature on TG-1.

☐ 2.2.9 Move SS-1 to the "TE-2" position.

Continuous Use

1. Initial Conditions

_____ _____ 1.1 Both pH calibration tanks shall be in place.
Date

_____ _____ 1.2 All valves on the control panel are closed.
Date

_____ _____ 1.3 The pH calibration has been completed within ≤6 weeks. **IF** the pH calibration has been completed within this time frame, proceed to Enclosure 4.9 (pH Housing and Gas Tank Evacuation).
Date

Complete _____ Incomplete _____

_____ _____ 1.4 The limits and precautions of this procedure have been reviewed and any conflicts found have been resolved.
Date

_____ _____ 1.5 Enclosure 4.6 (Panel Preparation) has been completed prior to performing this enclosure for PT and OP Runs.
Date

_____ _____ 1.6 The R&R and Auto Logs have been reviewed, evaluated, and determined to allow operations.
Date

2. Procedure

Check (√) as completed.

2.1 pH Probe Purge with Nitrogen

2.1.1 Purge the water from the pH probe assembly with nitrogen by performing the following steps.

2.1.1.1 Open the following valves:

- ☐ SV-202 (PALSS Nitrogen Supply)
- ☐ SV-205 (PALSS 500 ml Gas Tank Outlet Isol)
- ☐ SV-207 (PALSS 500 ml Gas Tank Inlet Isol)
- ☐ CV-103 (PALSS Liquid Tank Outlet Isol)
- ☐ CV-102 (PALSS pH Probe Inlet Isolation)
- ☐ CV-105 (PALSS pH Probe Outlet Isolation)

☐ 2.1.1.2 After one minute stop the nitrogen purge by, closing CV-105 (PALSS pH Probe Outlet Isolation).

Continuous Use

2.2 Pressurize PALSS pH A Buffer Tank

NOTE: During a PT run, Buffer Solution A will be a 4.0 pH buffer solution. This solution may vary during an accident situation.

☐ 2.2.1 Move SV-209 (PALSS pH Buffer Tank Isolation) to the "A" position.

☐ 2.2.2 Wait at least 30 seconds.

☐ 2.2.3 Move SV-209 (PALSS pH Buffer Tank Isolation) to the "OFF" position.

2.3 Evacuate the pH Probe Housing (place under vacuum)

☐ 2.3.1 Close SV-202 (PALSS Nitrogen Supply).

2.3.2 Open the following valves:

- ☐ SV-208 (PALSS Air Educator Inlet Isolation)
- ☐ SV-201 (PALSS Air Educator Outlet Isolation)

☐ 2.3.3 **WHEN** PG-4 drops to less than 30.0 psia, open SV-203 (PALSS Low Range Gas Tank Pressure Isolation).

☐ 2.3.4 **WHEN** pressure on PG-4 (PG-5 may be used for greater accuracy) drops too less than 3.0 psia and stabilizes, isolate the vacuum by closing CV-102 (PALSS pH Probe Inlet Isolation).

2.3.5 Close the following valves:

- ☐ CV-103 (PALSS Liquid Tank Outlet Isolation)
- ☐ SV-201 (PALSS Air Educator Outlet Isolation)
- ☐ SV-208 (PALSS Air Educator Inlet Isolation)

☐ 2.3.6 Ensure closed SV-203 (PALSS Low Range Gas Tank Pressure Isolate).

2.4 Fill pH Probe Housing with Buffer Solution A

NOTE: The calibration fluid is under pressure and the pH probe is under vacuum, this will move the pH buffer to the pH probe.

☐ 2.4.1 Move SV-209 (PALSS pH Buffer Tank Isolation) to the "A" position.

Continuous Use

☐ 2.4.2 Wait at least 30 seconds.

☐ 2.4.3 Move SV-209 (PALSS pH Buffer Tank Isolation), to the "OFF" position.

2.5 pH Probe Purge with Nitrogen

NOTE:	Sections 2.5, 2.6, 2.7 and 2.8 may be N/A'ed at the discretion of the PALSS Test Coordinator if it is determined that multiple flushes of pH housing with pH Buffer is **NOT** necessary.

2.5.1 Purge the pH buffer from the pH probe assembly with nitrogen by performing the following steps.

☐ 2.5.1.1 Open SV-202 (PALSS Nitrogen Supply).

☐ 2.5.1.2 Open or ensure open CV-103 (PALSS Liquid Tank Outlet Isolation).

2.5.1.3 Open the following valves:

☐ CV-102 (PALSS pH Probe Inlet Isolation)
☐ CV-105 (PALSS pH Probe Outlet Isolation)

☐ 2.5.1.4 After one minute stop the nitrogen purge by, closing CV-105 (PALSS pH Probe Outlet Isolation).

2.6 Pressurize PALSS pH A Buffer Tank

☐ 2.6.1 Move SV-209 (PALSS pH Buffer Tank Isolation) to the "A" position.

☐ 2.6.2 Wait at least 30 seconds.

☐ 2.6.3 Move SV-209 (PALSS pH Buffer Tank Isolation) to the "OFF" position.

2.7 Evacuate the pH Probe Housing (place under Vacuum)

☐ 2.7.1 Close SV-202 (PALSS Nitrogen Supply).

Continuous Use

2.7.2 Open the following valves:

- ☐ SV-208 (PALSS Air Educator Inlet Isolation)
- ☐ SV-201 (PALSS Air Educator Outlet Isolation)

☐ 2.7.3 **WHEN** PG-4 drops to less than 30.0 psia, open SV-203 (PALSS Low Range Gas Tank Pressure Isolation).

☐ 2.7.4 **WHEN** pressure on PG-4 (PG-5 may be used for greater accuracy) drops to less than 3.0 psia and stabilizes, isolate the vacuum by, closing CV-102 (PALSS pH Probe Inlet Isolation).

2.7.5 Close the following valves:

- ☐ CV-103 (PALSS Liquid Tank Outlet Isolation)
- ☐ SV-201 (PALSS Air Eductor Outlet Isolation)
- ☐ SV-208 (PALSS Air Eductor Inlet Isolation)

2.8 Fill pH Probe Housing with Buffer Solution A

NOTE:	The calibration fluid is under pressure and the pH probe is under vacuum, this will move the pH buffer to the pH probe.

☐ 2.8.1 Move SV-209 (PALSS pH Buffer Tank Isolation) to the "A" position.

☐ 2.8.2 Wait at least 30 seconds.

☐ 2.8.3 Move SV-209 (PALSS pH Buffer Tank Isolation) to the "OFF" position.

2.9 Calibrate the pH Meter

☐ 2.9.1 Press the "pH/ORP/TEMP" key on the pH meter until the temperature of the buffer solution is indicated.

☐ 2.9.2 Record the temperature.

Buffer temperature _____

☐ 2.9.3 Press the "pH/ORP/TEMP" key on the pH meter until the pH is indicated.

☐ 2.9.4 Press the HOLD key on the pH meter until the word "HOLD" flashes on the left side of the LCD display.

Continuous Use

NOTE: The Hold function causes the pH meter to maintain a constant output and alarm condition. This allows the electrode to be removed for calibration in a buffer solution without process upset. Also, the solution temperature compensation feature is disabled in the Hold mode (this allows calibration of the meter to the particular temperature of the buffer used).

☐ 2.9.5 The LCD will show the pH of the buffer solution. Wait for a stable reading, then press "STD/SLOPE" pad. The words "Set 1" and "Std" will appear on the left side of the LCD display.

NOTE:
- **IF** the numeric value begins to flash, there is insufficient difference in the pH solutions or the electrode may be cracked. Pressing the "pH/ORP/TEMP" pad will cancel the slope adjustment. If necessary, the electrode should be replaced and/or the procedure should be repeated.
- pH value of the 4.0 pH buffer solution at various temperatures is listed below and on the container of each buffer solution.

Temp °C	0	5	10	15	20	25	30	35	40	50	60
pH 4.0 Buffer	4.01	3.99	4.00	3.99	4.00	4.00	4.01	4.02	4.03	4.06	4.09

☐ 2.9.6 Use the "↑" and "↓" keys to change the value on the display to the value of the pH buffer solution.

☐ 2.9.7 **WHEN** the correct value is displayed, press the "ENTER" pad.

☐ 2.9.8 Read and record the pH value on the pH meter LCD display for buffer solution A.

Buffer Solution A_____

2.10 pH Probe Housing Flush with Demineralized Water (YM)

☐ 2.10.1 Open CV-101 (PALSS Liquid Tank Inlet Isolation).

☐ 2.10.2 Read PG-1.

Continuous Use

NOTE: The pressure on PG-1 should **NOT** be increasing at this point. If the pressure is increasing, it is probably due to a leaking PB valve. The Chemistry Manager should be contacted in the OSC during an accident situation. Otherwise the PALSS Test Coordinator should be contacted before proceeding to Step 2.10.3, if this occurs.

2.10.3 Open the following valves:

- ☐ CV-102 (PALSS pH Probe Inlet Isolation)
- ☐ CV-105 (PALSS pH Probe Housing Outlet Isolation)
- ☐ PB-3 (PALSS Demin Water Flush Valve)

☐ 2.10.4 Wait at least 5 minutes. The time can be varied according to the note below.

☐ 2.10.5 Monitor the pH meter and flowrate to ensure a proper flush of the probe is occurring.

NOTE: The pH meter should fluctuate, FG1 should indicate flow, and PG3 should show a pressure increase. Purge may be extended, if necessary.

2.10.6 Close the following valves:

- ☐ CV-101 (PALSS Liquid Tank Inlet Isolation)
- ☐ PB-3 (PALSS Demin Water Flush Valve)
- ☐ SV-203 (PALSS Low Range Gas Tank Pressure Isolation)

2.11 Purge of the Demineralized Water with Nitrogen

☐ 2.11.1 Open SV-202 (PALSS Nitrogen Supply).

2.11.2 Ensure open the following valves:

- ☐ SV-205 (PALSS 500 ml Gas Tank Outlet Isolation)
- ☐ SV 207 (PALSS 500 ml Gas Tank Inlet Isolation)

☐ 2.11.3 Open CV-103 (PALSS Outlet Liquid Tank Isolation).

☐ 2.11.4 Wait at least one minute.

☐ 2.11.5 Close CV-105 (PALSS pH Probe Outlet Isolation).

Continuous Use

2.12 Pressurize PALSS pH B Buffer Tank

NOTE: During a PT run, Buffer Solution B will be a 7.0 pH buffer solution. This solution may vary during an accident situation.

☐ 2.12.1 Move SV-209 (PALSS pH Buffer Tank Isolation) to the "B" position.

☐ 2.12.2 Wait at least 30 seconds.

☐ 2.12.3 Move SV-209 (PALSS pH Buffer Tank Isolation) to the "OFF" position.

2.13 Evacuate the pH Probe Housing (place under vacuum)

☐ 2.13.1 Close SV-202 (PALSS Nitrogen Supply).

2.13.2 Open the following valves:

☐ SV-208 (PALSS Air Educator Inlet Isolation)
☐ SV-201 (PALSS Air Educator Outlet Isolation)

☐ 2.13.3 **WHEN** PG-4 drops to <30.0 psia, open SV-203 (PALSS Low Range Gas Tank Pressure Isolation).

☐ 2.13.4 **WHEN** pressure on PG-4 (PG-5 may be used for greater accuracy) drops to <3.0 psia and stabilizes, isolate the vacuum by, closing CV-102 (PALSS pH Probe Inlet Isolation).

2.13.4.1 Close the following valves:

☐ SV-201 (PALSS Air Educator Inlet Isolation)
☐ SV-208 (PALSS Air Educator Outlet Isolation)
☐ SV-205 (PALSS 500 ml Gas Tank Outlet Isolation)
☐ SV-207 (PALSS 500 ml Gas Tank Inlet Isolation)
☐ CV-103 (PALSS Liquid Tank Outlet Isolation)

☐ 2.13.5 Ensure closed SV-203 (PALSS Low Range Gas Tank Pressure Isolation).

2.14 Fill pH Probe Housing with Buffer Solution B

NOTE: The calibration fluid is under pressure and the pH probe is under vacuum, this will move the pH buffer to the pH probe.

☐ 2.14.1 Move SV-209 (PALSS pH Buffer Tank Isolation) to the "B" position.

Continuous Use

☐ 2.14.2 Wait at least 30 seconds.

☐ 2.14.3 Move SV-209 (PALSS pH Buffer Tank Isolation) to the "OFF" position.

2.15 Purge of the pH Buffer with Nitrogen

NOTE:	Sections 2.15, 2.16, 2.17 and 2.18 may be N/A'ed at the discretion of the Test Coordinator if it is determined that multiple flushes of pH housing with pH Buffer is **NOT** necessary.

☐ 2.15.1 Open SV-202 (PALSS Nitrogen Supply).

2.15.2 Ensure open the following valves:

- ☐ SV-205 (PALSS 500 ml Gas Tank Outlet Isolation)
- ☐ SV-207 (PALSS 500 ml Gas Tank Inlet Isolation)

2.15.3 Open the following valves:

- ☐ CV-103 (PALSS Outlet Liquid Tank Isolation)
- ☐ CV-102 (PALSS pH Probe Inlet Isolation)
- ☐ CV-105 (PALSS pH Probe Outlet Isolation)

☐ 2.15.4 Wait at least one minute.

☐ 2.15.5 Close CV-105 (PALSS pH Probe Outlet Isolation).

2.16 Pressurize PALSS pH B Buffer Tank

☐ 2.16.1 Move SV-209 (PALSS pH Buffer Tank Isolation) to the "B" position.

☐ 2.16.2 Wait at least 30 seconds.

☐ 2.16.3 Move SV-209 (PALSS pH Buffer Tank Isolation) to the "OFF" position.

Continuous Use

2.17 Evacuate the pH Probe Housing (place under vacuum)

☐ 2.17.1 Close SV-202 (PALSS Nitrogen Supply).

2.17.2 Open the following valves:

- ☐ SV-208 (PALSS Air Educator Inlet Isolation)
- ☐ SV-201 (PALSS Air Educator Outlet Isolation)

☐ 2.17.3 **WHEN** PG-4 drops to <30.0 psia, open SV-203 (PALSS Low Range Gas Tank Pressure Isolation).

☐ 2.17.4 **WHEN** pressure on PG-4 (PG-5 may be used for greater accuracy) drops too less than 3.0 psia and stabilizes, isolate the vacuum by, closing CV-102 (PALSS pH Probe Inlet Isolation).

2.17.5 Close the following valves:

- ☐ SV-208 (PALSS Air Educator Inlet Isolation)
- ☐ SV-201 (PALSS Air Educator Outlet Isolation)
- ☐ SV-205 (PALSS 500 ml Gas Tank Outlet Isolation)
- ☐ SV-207 (PALSS 500 ml Gas Tank Inlet Isolation)
- ☐ CV-103 (PALSS Liquid Tank Outlet Isolation)

☐ 2.17.6 Ensure closed SV-203 (PALSS Low Range Gas Tank Pressure Isol).

2.18 Fill pH Probe Housing with Buffer Solution B

NOTE: The calibration fluid is under pressure and the pH probe is under vacuum, this will move the pH buffer to the pH probe.

☐ 2.18.1 Move SV-209 (PALSS pH Buffer Tank Isolation) to the "B" position.

☐ 2.18.2 Wait at least 30 seconds.

☐ 2.18.3 Move SV-209 (PALSS pH Buffer Tank Isolation) to the "OFF" position.

2.19 Check the pH Meter

☐ 2.19.1 The LCD will show the pH of the buffer solution. Wait for a stable reading, then press "STD/SLOPE" pad two times. The words "Set 1" and "Slope" will appear on the left side of the LCD display.

Continuous Use

NOTE:
- **IF** the numeric value begins to flash, there is insufficient difference in the pH solutions or the electrode may be cracked. Pressing the "pH/ORP/TEMP" pad will cancel the slope adjustment. If necessary, the electrode should be replaced and/or the procedure should be repeated.
- pH value of each buffer solution at various temperatures is listed below and on the container of each buffer solution.

Temp °C	0	5	10	15	20	25	30	35	40	50	60
pH 7.0 Buffer	7.12	7.11	7.07	7.05	7.03	7.00	6.99	6.99	6.97	6.97	6.98

☐ 2.19.2 Use the "↑ " and "↓ " keys to change the value on the display to the value of the pH buffer solution.

☐ 2.19.3 **WHEN** the correct value is displayed, press the "ENTER" pad.

☐ 2.19.4 Read and record the pH value on the pH meter LCD display for buffer solution B.

Buffer Solution B _____

☐ 2.19.5 Press "HOLD" to clear the word HOLD from LCD.

NOTE: The instrument will return to the normal operating mode for pH measurements.

2.20 pH Probe Housing Flush with Demineralized Water (YM).

☐ 2.20.1 Open CV-101 (PALSS Liquid Tank Inlet Isolation).

☐ 2.20.2 Read PG-1.

Continuous Use

NOTE: The pressure on PG-1 should **NOT** be increasing at this point. If the pressure is increasing, it is probably due to a leaking PB valve. The Chemistry Manager should be contacted in the OSC during an accident situation. Otherwise, the PALSS Test Coordinator should be contacted before proceeding to Step 2.20.3 if this occurs.

2.20.3 Open the following valves:

- ☐ CV-102 (PALSS pH Probe Inlet Isolation)
- ☐ CV-105 (PALSS pH Probe Outlet Isolation)
- ☐ PB-3 (PALSS Demin Water Flush Valve)

☐ 2.20.4 Wait at least 5 minutes. The time can be varied according to the note below.

☐ 2.20.5 Monitor the pH meter to ensure a proper flush of the probe is occurring.

NOTE: The pH meter should fluctuate, FG1 should indicate flow, and PG3 should show a pressure increase. Purge may be extended, if necessary.

2.20.6 Close the following valves:

- ☐ CV-101 (PALSS Liquid Tank Inlet Isolation)
- ☐ PB-3 (PALSS Demin Water Flush Valve)
- ☐ CV-105 (PALSS pH Probe Outlet Isolation)
- ☐ CV-102 (PALSS pH Probe Inlet Isolation)

NOTE: Calibration expiration date will be 6 weeks from date of calibration.

2.21 **IF** necessary, place an accepted sticker on the PALSS pH meter.

2.22 Check Slope Value

2.22.1 Press the "STD/SLOPE" key twice to enter the Slope mode. The words "Set 1" and "Slope" will appear on the left side of the LCD display.

2.22.2 Press the "STD/SLOPE" key and the "↑" key simultaneously to view the slope value on the display.

2.22.3 Record the Slope Value.

Slope Value _____

Continuous Use

2.22.4 **IF** slope value is less than 80%, report this value to the Test Coordinator for PT runs or Chemistry Manager for accident situations.

2.22.5 Press the "pH/ORP/TEMP" key to return to normal operating mode.

Continuous Use

1. Initial Conditions

_____ _____ 1.1 The limits and precautions of this procedure have been reviewed and any conflicts found have been resolved.
Date

NOTE:	This section is a prerequisite to obtaining a sample.

_____ _____ 1.2 Ensure complete Enclosure 4.6 (Panel Preparation).
Date

_____ _____ 1.3 The R&R and Auto Logs have been reviewed, evaluated, and determined to allow operations.
Date

2. Procedure

Check (√) as completed.

2.1 Purge Demineralized Water with Nitrogen

☐ 2.1.1 Ensure all valves on Control Panel are in the "CLOSED" position.

2.1.2 Open the following valves:

- ☐ SV-202 (PALSS Nitrogen Supply)
- ☐ SV-205 (PALSS 500 ml Gas Tank Outlet Isolation)
- ☐ SV-207 (PALSS 500 ml Gas Tank Inlet Isolation)
- ☐ CV-103 (PALSS Liquid Tank Outlet Isolation)
- ☐ CV-102 (PALSS pH Probe Inlet Isolation)
- ☐ CV-105 (PALSS pH Probe Outlet Isolation)

☐ 2.1.3 Wait at least one minute.

2.1.4 Close the following valves:

- ☐ CV-105 (PALSS pH Probe Outlet Isolation)
- ☐ SV-202 (PALSS Nitrogen Supply)
- ☐ SV-205 (PALSS 500 ml Gas Tank Outlet Isolation)
- ☐ SV-207 (PALSS 500 ml Gas Tank Inlet Isolation)
- ☐ CV-103 (PALSS Liquid Tank Outlet Isolation)
- ☐ CV-102 (PALSS pH Probe Inlet Isolation)

Continuous Use

2.2 pH Housing and Gas Tank Evacuation

2.2.1 Open the following valves:

- ☐ SV-208 (PALSS Air Educator Inlet Isolation)
- ☐ SV-201 (PALSS Air Educator Outlet Isolation)
- ☐ SV-204 (PALSS 30 ml Gas Tank Outlet Isolation)
- ☐ SV-205 (PALSS 500 ml Gas Tank Outlet Isolation)
- ☐ SV-206 (PALSS 30 ml Gas Tank Inlet Isolation)
- ☐ SV-207 (PALSS 500 ml Gas Tank Inlet Isolation)
- ☐ CV-103 (PALSS Liquid Tank Trap Outlet Isolation)
- ☐ CV-102 (PALSS pH Probe Inlet Isolation)

☐ 2.2.2 **WHEN** PG-4 drops to less than 30.0 psia, open SV-203 (PALSS Low Range Gas Tank Pressure Isolation).

☐ 2.2.3 **WHEN** the pressure on PG-4 (PG-5 may be used for greater accuracy) drops below 3.0 psia and stabilizes, Record reading from PG-4 and PG-5.

2.2.4 Close the following valves:

- ☐ SV-201 (PALSS Air Educator Outlet Isolation)
- ☐ SV-208 (PALSS Air Educator Inlet Isolation)

2.3 pH Housing Pressure

☐ 2.3.1 Read and Record pH Housing pressure on PG-4 and PG-5.

2.3.2 Close the following valves:

- ☐ CV-102 (PALSS pH Probe Inlet Isolation)
- ☐ CV-103 (PALSS Liquid Tank Outlet Isolation)
- ☐ SV-206 (PALSS 30 ml Gas Tank Inlet Isolation)
- ☐ SV-207 (PALSS 500 ml Gas Tank Inlet Isolation)

2.4 Gas Tank Pressures

☐ 2.4.1 Read and record the gas tank pressure on both tanks from PG-4 and PG-5.

2.4.2 Close the following valves:

- ☐ SV-205 (PALSS 500 ml Gas Tank Outlet Isolation)
- ☐ SV-204 (PALSS 30 ml Gas Tank Outlet Isolation)
- ☐ SV-203 (PALSS Low Range Gas Tank Pressure Isolation)

Continuous Use

1. Initial Conditions

_____ _____ 1.1 The limits and precautions of this procedure have been reviewed and any conflicts found have been resolved.
Date

_____ _____ 1.2 This enclosure should only be performed during an accident situation.
Date

_____ _____ 1.3 The R&R and Auto Logs have been reviewed, evaluated, and determined to allow operations.
Date

2. Procedure

Check (√) as completed.

Nuclear Sampling (NM) System

NOTE:	These valves need to be isolated prior to opening any containment isolation valves to minimize the dose rates in the general area of the Post Accident Liquid Sampling System (PALSS).

2.1 Unit-1 Isolation

☐ 2.1.1 Close 1NM-29 (NC Hot Leg Smpl HDR to Rad Mon) (location Rm 238 A Smpl hood).

☐ 2.1.2 Close 1NM-264 (NC Hot Leg Smpl Hx 1A Outlet) (location rm 238 Hx gallery).

☐ 2.1.3 Close 1NM-278 (NC Hot Leg Smpl Hx 1B Outlet) (location rm 238 Hx gallery).

☐ 2.1.4 Close 1NM-265 (ND Smpl Hx Outlet) (location rm 238 Hx gallery).

☐ 2.1.5 Close 1NM-263 (Pressurizer Smpl Hx Outlet) (location rm 238 Hx gallery)

Continuous Use

2.2 Unit-2 Isolation

- ☐ 2.2.1 Close 2NM-29 (NC Hot Leg Smpl HDR to Rad Mon) (location rm 248 A smpl hood).
- ☐ 2.2.2 Close 2NM-264 (NC Hot Leg Smpl Hx 1A Outlet) (location rm 248 Hx gallery).
- ☐ 2.2.3 Close 2NM-278 (NC Hot Leg Smpl Hx 1B Outlet) (location rm 248 Hx gallery)
- ☐ 2.2.4 Close 2NM-265 (ND Smpl Hx Outlet) (location rm 248 Hx gallery).
- ☐ 2.2.5 Close 2NM-263 (Pressurizer Smpl Hx Outlet) (location rm 248 Hx gallery).

Continuous Use

1. Initial Conditions

_____ Date _____ 1.1 A decision has been made to sample either Reactor Coolant (NC) Section 2.3 or the Reactor Sump (ND) Section 2.5.

_____ Date _____ 1.2 All valves on the Control Panel are closed prior to performing this enclosure.

> **NOTE:** During diagnostic runs, Enclosures 4.8 (Calibration of the PALSS pH Meter) and/or 4.9 (pH Housing and Gas Tank Evacuation) may be omitted depending on the problem needing investigated.

_____ Date _____ 1.3 Enclosure 4.4 (Unit 1 KC Valve Alignment), Enclosure 4.5 (Unit 2 KC Valve Alignment), Enclosure 4.6 (Panel Preparation), Enclosure 4.7 (Startup and Checkout), Enclosure 4.8 (Calibration of the PALSS pH Meter) and Enclosure 4.9 (pH Housing and Gas Tank Evacuation), have been completed prior to performing this enclosure for PT and OP runs.

_____ 1.4 For an accident situation only, verify that Enclosure 4.10 (NM System Isolation) has been performed prior to proceeding with this enclosure.

_____ Date _____ 1.5 The Limits and Precautions of this procedure have been reviewed and any conflicts found have been resolved.

_____ Date _____ 1.6 The R&R and Auto Logs have been reviewed, evaluated, and determined to allow operations.

2. Procedure

Check (√) as completed.

- For NC sampling, complete Sections 2.1, 2.2, 2.3, and 2.4.
- For ND sampling, complete Sections 2.1, 2.5, and 2.6.

Continuous Use

2.1 Routing PALSS Waste to the VCT

NOTE: If PALSS periodic test is being performed, Section 2.1 should be omitted. If performing ND sampling, proceed to Section 2.5.

CAUTION: Reactivity Management may be affected by this operation. Consult Chemistry Management Staff with any concerns.

☐ 2.1.1 Lock open:

Unit 1	Unit 2
1NM-492	2NM-492

(PALSS Waste to the VCT)

☐ 2.1.2 Lock closed:

Unit 1	Unit 2
1NM-393	2NM-393

(PALSS Waste to the WEFT)

☐ 2.1.3 Ensure open:

Unit 1	Unit 2
1NM-807	2NM-807

(PALSS Waste to VCT Isolation)
{PIP #0-C-98-2886}

☐ 2.1.4 Unit 1 only, ensure open 1NM-494 (PALSS Waste to the VCT Isol).

☐ 2.1.5 For ND sampling, proceed to Section 2.5.

Continuous Use

2.2 Verify Hot Leg Containment Isolation Valve Positions

2.2.1 For Reactor Coolant Loop A

2.2.1.1 Ensure open or obtain permission from Operations and open the following valves:

1NM-22A (2NM-22A) (Hot Leg A Sample Containment Isolation)
1NM-26B (2NM-26B) (Hot Leg Sample Header Containment Isolation)

2.2.1.2 Ensure closed or obtain permission from Operations and close 1NM-25A (2NM-25A) (Hot Leg C Sample Containment Isolation).

2.2.2 For Reactor Coolant Loop C

2.2.2.1 Ensure open or obtain permission from Operations and open the following valves:

1NM-25A (2NM-25A) (Hot Leg C Sample Containment Isolation)
1NM-26B (2NM-26B) (Hot Leg Sample Header Containment Isolation)

2.2.2.2 Ensure closed or obtain permission from Operations and close: 1NM-22A (2NM-22A) (Hot Leg Sample Containment Isolation).

2.3 Reactor Coolant (NC) Sample Purge

☐ 2.3.1 Ensure the selector switch SS-3 is in the "PT-1" position.

☐ 2.3.2 Open CV-101 (PALSS Liquid Tank Inlet Isolation).

☐ 2.3.3 Read PG-1.

Continuous Use

NOTE: The pressure on PG-1 should **NOT** be increasing at this point. If the pressure is increasing, it is probably due to a leaking PB valve. PALSS Test Coordinator (Normal Runs) or Chemistry Manager (Accident Situations) should be contacted before proceeding to Step 2.3.4, if this occurs.

2.3.4 Open the following valves:

- ☐ PB-2 (NC Hot Legs A and C Sample Valve)
- ☐ CV-104 (PALSS Liquid Tank Outlet Isolation)

☐ 2.3.5 Slowly open CV-401 (PALSS Liquid Tank Throttle).

☐ 2.3.6 Adjust CV-401 (PALSS Liquid Tank Throttle). Obtain 0.5 -1.5 (Desired 0.5 - 1.0) gpm on FG-1.

NOTE:
- Pressure on PG-3 should slowly increase but usually does **NOT** exceed 100 psig.
- The next step may be repeated to obtain the correct flowrate

☐ 2.3.7 **IF** it is necessary to reduce pressure, flow, or temperature, then:

2.3.7.1 Close CV-104 (PALSS Liquid Tank Outlet Isol).

2.3.7.2 Allow the pressure to bleed off then, close CV-401 (PALSS Liquid Tank Throttle).

2.3.7.3 Open CV-104 (PALSS Liquid Tank Outlet Isol).

2.3.7.4 Adjust CV-401 (PALSS Liquid Tank Throttle) to obtain 0.5 -1.5 (Desired 0.5 - 1.0) gpm on FG-1.

☐ 2.3.8 Record the flowrate on FG-1 in gpm.

☐ 2.3.9 Record the purge pressure on PG-3 in psig.

NOTE: TE-2 should **NOT** exceed 150 degrees F as read on TG-1.

☐ 2.3.10 **IF** temperature on TG-1 exceeds 150 degrees, repeat Step 2.3.7.

Continuous Use

NOTE: **IF** 1(2) EMF-48 is out of service or isolated, a purge volume of 18 gallons will have to be used.

☐ 2.3.11 Wait until 8 gallons or more have purged through the PALSS panel per FG-1.

☐ 2.3.12 Record the final temperature on TE-2 as read on TG-1 in °F after the proper purge.

NOTE: The next three steps should be read before proceeding.

☐ 2.3.13 Slowly close CV-401 (PALSS Liquid Tank Throttle).

2.3.14 Quickly close the following valves:

- ☐ CV-104 (PALSS Liquid Tank Outlet Isolation)
- ☐ CV-101 (PALSS Liquid Tank Inlet Isolation)

☐ 2.3.15 Read and record the liquid tank pressure on PG-1 in psig and record the gas sample trap time. (This is the official sample trap time for the Gas Geli, Hydrogen Sample, and pH).

☐ 2.3.16 Move the switch SS-3 to the "PT-2" position to measure the discharge of the injection valve.

☐ 2.3.17 Open CV-107 (PALSS Rheodyne Loop Sample Inlet Isolation).

NOTE:
- Sample flow rate should be monitored on FG-2. Maximum flow rate on FG-2 is 300 ml/min through the sample loop and should **NOT** be exceeded.
- Greater than 40 psig sample pressure should be supplied to the Rheodyne injection valves for proper operation.

☐ 2.3.18 Slowly throttle open CV-402 (PALSS Rheodyne Loop Sample Outlet Isolation).

Adjust flow to 250 to 300 ml/min.

☐ 2.3.19 Record the Rheodyne flowrate on FG-2 in ml/min.

☐ 2.3.20 Record the Rheodyne sample loop pressure on PG-1.

Continuous Use

☐ 2.3.21 Purge at least 500 ml through FG-2.

NOTE: There are two continuous flow paths through the sample valves. **WHEN** the valve is opened, the sample loop is moved to the sample flow path. **WHEN** the valve is closed the sample loop is moved to the sample injection (collection) flow path.

☐ 2.3.22 Open the selected sample injection valve(s) (sample loops{s}).

NOTE: During an accident situation the Chemistry Manager (Designee) will select which sample loop should be used. This decision is based on reactor coolant activity and other parameters. During periodic testing, two sample loops will be sampled and the third will be used for obtaining the demin water blank for the Chloride analysis unless otherwise directed by the PALSS Test Coordinator.

CV-503	100µl	Sample Loop Isolation Valve
CV-502	1 ml	Sample Loop Isolation Valve
CV-501	5 ml	Sample Loop Isolation Valve

☐ 2.3.23 Purge at least 150 ml through FG-2.

☐ 2.3.24 Close the selected sample injection valve(s).

☐ 2.3.25 Record the Rheodyne sample loops trap time. (This is the official sample trap time for the Liquid Geli or the Rheodyne Geli, Boron Sample and Chloride Sample)

2.3.26 Close the following valves:

- ☐ PB-2 (NC Hot Legs A and C Sample Valve)
- ☐ CV-107 (PALSS Rheodyne Loop Sample Inlet Isolation)
- ☐ CV-402 (PALSS Rheodyne Loop Sample Outlet Isolation)

NOTE: **IF** the clogged filter light, LT-3, is on, Enclosure 4.20 (Inlet Filter/Strainer Backflush) should be initiated.

2.3.27 Ensure closed the following valves:

- ☐ SV-206 (PALSS 30 ml Gas Tank Inlet Isol)
- ☐ SV-207 (PALSS 500 ml Gas Tank Inlet Isol)

Continuous Use

2.3.28 Open CV-103 (PALSS Liquid Tank Outlet Isol).

2.3.29 Wait at least 2 minutes for the dissolved gases to equilibrate from the sample.

2.3.30 Move the selector switch, SS-3 to "PT-1" position.

2.3.31 Read and record the pressure on PG-1 in PSIG.

2.4 Establishing Normal Alignment for the PALSS Waste and Containment Isolations.

NOTE: If performing the PALSS periodic test, this section should be omitted.

☐ 2.4.1 Open and lock 1NM-393/2NM-393 (PALSS Waste to the WEFT). {PIP C98-2886}

☐ 2.4.2 Close and lock 1NM- 492/2NM-492 (PALSS Waste to the VCT).

☐ 2.4.3 Obtain permission to close and close the appropriate containment isolation valves.

NC - (Reactor Coolant System)

- 1NM-26B (2NM-26B) (Hot Leg Sample Header Containment Isolation)
- 1NM-22A (2NM-22A) (Hot Leg A Sample Cont Isol)

OR

- 1NM-25A (2NM-25A) (Hot Leg C Sample Cont Isol)

NOTE:
- CV-103 (PALSS Liquid Tank Outlet Isol) will be in the "OPEN" position at the end of this step.
- **IF** the NC System is the only system required for sampling, then this enclosure is now complete.

2.5 Reactor Sump (ND) Sample Purge

☐ 2.5.1 Ensure power to 1(2)NM-39 and/or 1(2)NM-40 is on per Operations or have Operations turn the power on the appropriate valve for operation.

Continuous Use

☐ 2.5.2 Obtain permission and open the appropriate valve:

- 1NM-39 (2NM-39) (ND Pump 1A (2A) Disch Sample Line Isol)
- 1NM-40 (2NM-40) (ND Pump 1B (2B) Disch Sample Line Isol)

☐ 2.5.3 Ensure the selector switch SS-3 is in the "PT-1" position.

☐ 2.5.4 Open CV-101 (PALSS Liquid Tank Inlet Isolation).

☐ 2.5.5 Read PG-1.

NOTE: The pressure on PG-1 should **NOT** be increasing at this point. If the pressure is increasing, it is probably due to a leaking PB valve. PALSS Test Coordinator (Normal Runs) or Chemistry Manager (Accident Situations) should be contacted before proceeding to Step 2.5.6 if this occurs.

☐ 2.5.6 Open PB-1 (ND Pump Discharge Isolation Valve).

☐ 2.5.7 Open CV-104 (PALSS Liquid Tank Outlet Isolation).

CAUTION: PG-3 should **NOT** exceed 150 psig. CV-401 (PALSS Liquid Tank Throttle) is very sensitive and only a slight turn is needed to throttle this valve.

☐ 2.5.8 Slowly open CV-401 (PALSS Liquid Tank Throttle).

☐ 2.5.9 Adjust CV-401 (PALSS Liquid Tank Throttle) until the maximum pressure is obtained on PG-1. Approximately 0.5 -1.5 (Desired 0.5- 1.0) gpm should be obtained on FG-1.

NOTE: The next step may be repeated to obtain the proper flowrate.

☐ 2.5.10 **IF** it is necessary to reduce pressure, flow, or temperature, then:

2.5.10.1 Close CV-104 (PALSS Liquid Tank Outlet Isol).

2.5.10.2 Allow the pressure to bleed off, then close CV-401 (PALSS Liquid Tank Throttle).

2.5.10.3 Open CV-104 (PALSS Liquid Tank Outlet Isol).

Continuous Use

2.5.10.4 Adjust CV-401 (PALSS Liquid Tank Isol) to obtain 0.5 -1.5 (Desired 0.5 - 1.0) gpm on FG-1.

☐ 2.5.11 Record the flowrate on FG-1 in gpm.

☐ 2.5.12 Record the purge pressure on PG-3 in psig.

NOTE: TE-2 should **NOT** exceed 150 °F as read on TG-1.

☐ 2.5.13 Wait until 20 gallons or more have purged through the PALSS panel per FG-1.

☐ 2.5.14 Record the final temperature on TE-2 as read on TG-1 in degrees F after the proper purge.

NOTE: The next three steps should be read before proceeding.

☐ 2.5.15 Slowly close CV-401 (PALSS Liquid Tank Throttle).

2.5.16 Quickly close the following valves:

- ☐ CV-104 (PALSS Liquid Tank Outlet Isolation)
- ☐ CV-101 (PALSS Liquid Tank Inlet Isolation)

☐ 2.5.17 Read and record the liquid tank pressure on PG-1 in psig at trap time. (This is the official sample trap time for the Gas Geli, Hydrogen Sample, and pH)

NOTE: **IF** the clogged filter light LT-3 is on, Enclosure 4.20 (Inlet Filter/Strainer Backflush) should be initiated.

2.5.18 Ensure closed the following valves:

- ☐ SV-206 (PALSS 30 ml Gas Tank Inlet Isol)
- ☐ SV-207 (PALSS 500 ml Gas Tank Inlet Isol)

☐ 2.5.19 Open CV-103 (PALSS Liquid Tank Outlet Isol).

☐ 2.5.20 Wait at least 2 minutes for the dissolved gases to equilibrate from the sample.

Continuous Use

NOTE: The selector switch SS-3 should be in the "PT-1" position.

☐ 2.5.21 Read and record the pressure on PG-1 in psig.

☐ 2.5.22 Move the switch SS-3 to the "PT-2" position to measure the discharge of the injection valve.

☐ 2.5.23 Open CV-107 (PALSS Rheodyne Loop Sample Inlet Isolation).

NOTE:
- Sample flow rate should be monitored on FG-2. Maximum flowrate on FG-2 is 300 ml/min through the sample loop and should **NOT** be exceeded.
- Greater than 40 psig sample pressure should be supplied to the Rheodyne injection valves for proper operation.

☐ 2.5.24 Slowly throttle open CV-402 (PALSS Rheodyne Loop Sample Outlet Isolation).

Adjust flow to 75 to 300 ml/min.

☐ 2.5.25 Record the Rheodyne flowrate on FG-2 in ml/min.

☐ 2.5.26 Record the Rheodyne sample loop pressure on PG-1.

☐ 2.5.27 Purge at least 500 ml through FG-2.

NOTE: There are two continuous flow paths through the sample valves. **WHEN** the valve is opened, the sample loop is moved to the sample flow path. **WHEN** the valve is closed, the sample loop is moved to the sample injection (collection) flow path.

☐ 2.5.28 Open the selected sample injection valve(s) (Sample Loops)

NOTE: During an accident situation the Chemistry Manager (Designee) will select which sample loop should be used based on reactor coolant activity and other parameters. During periodic testing, two sample loops will be sampled unless otherwise directed by the PALSS Test Coordinator.

CV-503	100ul	Sample Loop Isolation Valve
CV-502	1 ml	Sample Loop Isolation Valve
CV-501	5 ml	Sample Loop Isolation Valve

Continuous Use

☐ 2.5.29 Purge at least 150 ml through FG-2.

☐ 2.5.30 Close the selected sample injection valve(s).

☐ 2.5.31 Record the Rheodyne sample loops trap time. (This is the official sample trap time for the Liquid Geli or the Rheodyne Geli, Boron Sample, and Chloride Sample)

2.5.32 Close the following valves:

- ☐ PB-1 (ND Pump Discharge Isolation Valve)
- ☐ CV-107 (PALSS Rheodyne Loop Sample Inlet Isolation)
- ☐ CV-402 (PALSS Rheodyne Loop Sample Outlet Isolation)

☐ 2.5.33 Obtain permission and close the appropriate containment isolation valves.
ND - for the Residual Heat Removal System
- 1NM-39 (2NM-39) (ND Pump 1A (2A) Disch Sample Line Isol)
- 1NM-40 (2NM-40) (ND Pump 1B (2B) Disch Sample Line Isol)

☐ 2.5.34 Request Operations turn the power off the appropriate ND valve above or keep the power on as directed by Operations.

2.6 Establishing Normal Alignment For The PALSS Waste and Containment Isolations

NOTE: **IF** the PALSS periodic test is being performed, this section should be omitted.

☐ 2.6.1 Open and lock:

Unit 1	Unit 2
1NM-393	2NM-393

(PALSS Waste to the WEFT)
{PIP #0-C98-2886}

☐ 2.6.2 Close and lock:

Unit 1	Unit 2
1NM-492	2NM-492

(PALSS Waste to the VCT)

NOTE: CV-103 (PALSS Liquid Tank Outlet Isol) will be in the "OPEN" position at the end of this step.

Continuous Use

1. Initial Conditions

_____ Date _____ 1.1 Ensure Enclosure 4.9 (pH Housing and Gas Tank Evacuation), has been completed prior to starting this enclosure.

_____ Date _____ 1.2 **IF** Hydrogen Sample and Gas Gamma Isotopic Samples are **NOT** needed, proceed to Enclosure 4.13 (Sample pH Measurement).

_____ Date _____ 1.3 The Limits and Precautions of this procedure have been reviewed and any conflicts found have been resolved.

_____ Date _____ 1.4 **IF** troubleshooting using this enclosure, verify complete Enclosure 4.6 (Panel Preparation).

_____ Date _____ 1.5 The R&R and Auto Logs have been reviewed, evaluated, and determined to allow operations.

2. Procedure

Check (√) as completed.

2.1 500 ml Gas Tank Pressure

2.1.1 Open the following valves:

- ☐ SV-205 (PALSS 500 ml Gas Tank Outlet Isolation)
- ☐ SV-203 (PALSS Low Range Gas Tank Pressure Isolation)

☐ 2.1.2 Read and record the 500 ml gas tank pressure in psia on PG-4 and PG-5.

2.1.3 Close the following valves:

- ☐ SV-203 (PALSS Low Range Gas Tank Pressure Isolation)
- ☐ SV-205 (PALSS 500 ml Gas Tank Outlet Isolation)

2.2 30 ml Gas Tank Pressure

2.2.1 Open the following valves:

- ☐ SV-204 (PALSS 30 ml Gas Tank Outlet Isolation)
- ☐ SV-203 (PALSS Low Range Gas Tank Pressure Isolation)

Continuous Use

☐ 2.2.2 Read and record the 30 ml gas tank pressure in psia on PG-4 and PG-5.

2.2.3 Close the following valves:

- ☐ SV-203 (PALSS Low Range Gas Tank Pressure Isolation)
- ☐ SV-204 (PALSS 30 ml Gas Tank Outlet Isolation)

2.3 Pressure Check/Repeat Evacuation

☐ 2.3.1 **IF** the gas tank pressures obtained above is greater than 3.0 psia, then proceed to the next step. **IF** the gas tank pressure is less than 3.0 psia, then skip this section and proceed to Section 2.4.

☐ 2.3.2 Close CV-103 (PALSS Liquid Tank Outlet Isolation).

2.3.3 Open the following valves:

- ☐ SV-204 (PALSS 30 ml Gas Tank Outlet Isolation)
- ☐ SV-205 (PALSS 500 ml Gas Tank Outlet Isolation)
- ☐ SV-201 (PALSS Air Educator Outlet Isolation)
- ☐ SV-208 (PALSS Air Educator Inlet Isolation)
- ☐ SV-203 (PALSS Low Range Gas Tank Pressure Isolation)

☐ 2.3.4 Wait until the gas tank pressure on PG-4 or PG-5 is less than 3.0 psia.

2.3.5 Close the following valves:

- ☐ SV-201 (PALSS Air Educator Outlet Isolation)
- ☐ SV-203 (PALSS Low Range Gas Tank Pressure Isolation)
- ☐ SV-204 (PALSS 30 ml Gas Tank Outlet Isolation)
- ☐ SV-205 (PALSS 500 ml Gas Tank Outlet Isolation)
- ☐ SV-208 (PALSS Air Educator Inlet Isolation)

☐ 2.3.6 Open CV-103 (PALSS Liquid Tank Outlet Isolation).

2.4 Gas Stripping Method with Nitrogen

☐ 2.4.1 Place SS-2 in the "RD-1" position.

2.4.2 Ensure closed SV-205 (PALSS 500 ml Gas Tan Outlet Isolation).

Continuous Use

2.4.3 Open the following valves:

- ☐ SV-207 (PALSS 500 ml Gas Tank Inlet)
- ☐ CV-106 (PALSS Nitrogen Liquid Tank Isolation)

☐ 2.4.4 Ensure or place switch SS-3 is on the "PT-1" position.

☐ 2.4.5 Periodically activate S-109, which starts the vibrator on the 500 ml liquid tank for at least 10 minutes.

☐ 2.4.6 Close CV-106 (PALSS Nitrogen Liquid Tank Isolation).

☐ 2.4.7 Verify S-109 vibrator on the 500 ml Liquid Tank has been deactivated.

☐ 2.4.8 Record temperature _____ °F on TG-2.

2.4.9 Open the following valves:

- ☐ SV-205 (PALSS 500 ml Gas Tank Outlet Isolation)
- ☐ SV-204 (PALSS 30 ml Gas Tank Outlet Isolation)

☐ 2.4.10 Wait at least 5 minutes after PG-4 stabilizes (Alternate PG-1).

☐ 2.4.11 Close SV-204 (PALSS 30 ml Gas Tank Outlet Isolation).

☐ 2.4.12 Place SS-2 in the "RD-2" position.

☐ 2.4.13 Record temperature _____ °F on TG-2.

2.4.14 Close the following valves:

- ☐ SV-205 (PALSS 500 ml Gas Tank Outlet Isolation)
- ☐ SV-207 (PALSS 500 ml Gas Tank Inlet Isolation)
- ☐ CV-103 (PALSS Liquid Tank Trap Outlet Isolation)

☐ 2.4.15 Proceed to Enclosure 4.13 (Sample pH Measurement).

Continuous Use

1. Initial Conditions

_____ _____ 1.1 The pH housing has been evacuated per Enclosure 4.9, (pH Housing and Gas Tank Evacuation).
Date

_____ _____ 1.2 The Limits and Precautions of this procedure have been reviewed and any conflicts found have been resolved.
Date

_____ _____ 1.3 Enclosure 4.6 (Panel Preparation) has been completed.
Date

_____ _____ 1.4 The R&R Log and Area Logs have been reviewed, evaluated, and determined to allow operations.
Date

2. Procedure

NOTE: **IF** pH analysis is **NOT** required, proceed to Enclosure 4.14, System Flush.

Check (√) as completed.

2.1 pH Measurement

2.1.1 Ensure closed the following valves:

- ☐ SV-206 (PALSS 30 ml Gas Tank Inlet Isolation)
- ☐ SV-204 (PALSS 30 ml Gas Tank Outlet Isolation)

☐ 2.1.2 Monitor the pressure on PG-1.

☐ 2.1.3 Place or ensure switch SS-3 in "PT-1" position.

2.1.4 Open the following valves:

- ☐ SV-202 (PALSS Nitrogen Supply)
- ☐ SV-205 (PALSS 500 ml Gas Tank Outlet Isolation)
- ☐ SV-207 (PALSS 500 ml Gas Tank Inlet Isolation)

☐ 2.1.5 Open or ensure opened CV-103 (PALSS Liquid Tank Outlet Isolation).

☐ 2.1.6 Wait until the pressure on PG-1 is at least 60 psig and record.

Continuous Use

2.1.7 Close the following valves:

- ☐ SV-205 (PALSS 500 ml Gas Tank Outlet Isolation)
- ☐ SV-202 (PALSS Nitrogen Supply)

☐ 2.1.8 Open CV-102 (PALSS pH Probe Inlet Isolation).

☐ 2.1.9 Read and record the pH reading.

2.1.10 Close the following valves:

- ☐ CV-102 (PALSS pH Probe Inlet Isolation)
- ☐ CV-103 (PALSS Liquid Tank Outlet Isolation)
- ☐ SV-207 (PALSS 500 ml Gas Tank Inlet Isolation)

Continuous Use

1. Initial Conditions

NOTE:	This next step is to only be used during accident situations and timed OP/PT runs.

_____ _____ 1.1 Contact lab person (if available) to pick up samples (samples should be ready in 7-10 minutes).
Date

_____ _____ 1.2 The Limits and Precautions of this procedure have been reviewed and any conflicts found have been resolved.
Date

_____ _____ 1.3 Ensure complete Enclosure 4.6 (Panel Preparation).
Date

_____ _____ 1.4 The R&R Log and Area Logs have been reviewed, evaluated, and determined to allow operations.
Date

2. Procedure

Check (√) as completed.

2.1 PALSS Sump Pump Drain

2.1.1 Ensure closed the following valves:

- ☐ SV-204 (PALSS 30 ml Gas Tank Outlet Isolation)
- ☐ SV-206 (PALSS 30 ml Gas Tank Inlet Isolation)

☐ 2.1.2 Ensure the sample injection valves (CV-501, CV-502, and CV-503) are "CLOSED".

☐ 2.1.3 Check if LT-1 and/or LT-2 is lit. If so, perform this section. **IF NOT**, proceed to Section 2.2.

NOTE:	It is abnormal to find water in the PALSS sump. All liquid is pumped outside the PALSS panel to a waste location. If there is water in the sump, then a technical investigation shall be performed after or during the periodic test. During an accident situation, this investigation shall be left to the discretion of the panel operator.

☐ 2.1.3.1 Activate switch 110, Sump Pump Power.

☐ 2.1.3.2 **WHEN** both lights clear, deactivate switch 110, Sump Pump Power.

Continuous Use

2.2 Flush of the 500 ml Liquid Tank, pH Housing, and Sample Injection Valves

2.2.1 Initial Line Up

☐ 2.2.1.1 Close or ensure closed CV-103 (PALSS Liquid Tank Outlet Isol).

☐ 2.2.1.2 Open CV-101 (PALSS Liquid Tank Inlet Isolation).

☐ 2.2.1.3 Read PG-1.

NOTE: The pressure on PG-1 should **NOT** be increasing at this point. If the pressure is increasing, it is probably due to a leaking PB valve. If this occurs, the Chemistry Manager should be contacted during an accident situation or otherwise the PALSS Test Coordinator should be contacted before proceeding to Step 2.2.1.4.

☐ 2.2.1.4 Open PB-3 (PALSS Demin Water Flush Valve).

2.2.2 500 ml liquid Tank Flush

2.2.2.1 Open the following valves:

☐ CV-104 (PALSS Liquid Tank Outlet Isolation)
☐ CV-401 (PALSS Liquid Tank Throttle)

2.2.3 pH Housing Flush

2.2.3.1 Open the following valves:

☐ CV-102 (PALSS pH Probe Inlet Isolation)
☐ CV-105 (PALSS pH Probe Outlet Isolation)

2.2.4 Sample Injection Valve Flush

2.2.4.1 Open the following valves:

☐ CV-107 (PALSS Rheodyne Loop Inlet Isol)
☐ CV-402 (PALSS Rheodyne Loop Outlet Isol)

☐ 2.2.4.2 Wait at least 3 minutes.

Continuous Use

2.2.5 Secure System Flush

2.2.5.1 Close the following valves:

- ☐ CV-401 (PALSS Liquid Tank Throttle)
- ☐ CV-104 (PALSS Liquid Tank Outlet Isol)
- ☐ CV-105 (PALSS pH Probe Outlet Isolation)
- ☐ CV-102 (PALSS pH Probe Inlet Isolation)
- ☐ CV-101 (PALSS Liquid Tank Inlet Isolation)
- ☐ CV-107 (PALSS Rheodyne Loop Inlet Isol)
- ☐ CV-402 (PALSS Rheodyne Loop Outlet Isol)
- ☐ PB-3 (PALSS Demin Water Flush Valve)

Continuous Use

1. Initial Conditions

NOTE:	During the PT run, dose rates should be verified as acceptable by looking at the room plan view.

_____ _____ 1.1 Dose rates at the sample panel are low enough to allow access.
Date

_____ _____ 1.2 The Limits and Precautions of this procedure have been reviewed and any conflicts found have been resolved.
Date

_____ _____ 1.3 The R&R and Auto Logs have been reviewed, evaluated, and determined to allow operations.
Date

2. Procedure

Check (√) as completed.

2.1 Liquid Sample Retrieval

NOTE:	If only a Hydrogen Sample and/or Gas Gamma Isotopic are needed, proceed to Section 2.2 of this enclosure.

☐ 2.1.1 Ensure the following valves are closed.

- PB-1 ND Sample Isolation Valve (1NM-295/2NM-295)
- PB-2 NC Sample Isolation Valve (1NM-294/2NM-294)
- PB-3 PALSS Demin (YM) Flush Water Inlet Isolation Valve (1NM-345/2NM-345)
- PB-4 Y-Strainer Flush Outlet Isolation Valve (1NM-801/2NM-801)

Continuous Use

☐ 2.1.2 Ensure LT-1 and LT-2 are **NOT** lit. **IF** they are then perform this section. **IF NOT**, then proceed to Section 2.1.3.

NOTE: It is abnormal to find water in the PALSS sump. All liquid is pumped outside the PALSS panel to a waste location. If there is water in the sump, then a technical investigation shall be performed during or after the periodic test. During an accident situation, this investigation shall be left to the discretion of the panel operator.

☐ 2.1.2.1 Activate switch 110, Sump Pump Motor.

☐ 2.1.2.2 **WHEN** both lights clear, deactivate switch 110, Sump Pump Power.

NOTE:

- During the PT run, The PALSS Test Coordinator will determine which loops will be utilized for samples. The remaining loop should have a bottle attached for preparing a blank for the chloride analysis, if performing chloride analysis.

  During an accident situation, the Chemistry Manager will determine which loop will be sampled and an additional loop should be used for obtaining a blank for the chloride analysis.

  If no boron, chloride, gamma isotopic liquid or total Rheodyne samples are needed, proceed to Section 2.2.

- **IF** a total Rheodyne sample (gas and liquid) is desired, let the vacuum in the bottle pull as much fluid as possible before filling the remainder of the bottle by using the nitrogen.

☐ 2.1.3 Attach evacuated sample bottles onto the needle of the desired injection valves.

☐ 2.1.4 Select the flow path for sample collection by turning CV-612 (Dilution Water to Flush Sample Loop Valve) to a filled sample loop.

☐ 2.1.5 Slowly Turn CV-613 (Nitrogen To Flush Sample Loop Valve) to the "NITROGEN" position.

☐ 2.1.6 Once approximately 10-15 ml of liquid sample have been collected, turn CV-613 (Nitrogen to Flush Sample Valve) to the "VENT" position.

☐ 2.1.7 Wait at least 10 seconds for the sample line to depressurize.

Continuous Use

☐ 2.1.8 Turn CV-612 (Dilution Water to Flush Sample Loop Valve) to the "OFF" position.

☐ 2.1.9 Repeat Steps 2.1.4 through 2.1.8 as necessary when more than one sample has been selected for analysis. (Example: during periodic testing).

☐ 2.1.10 **IF** chloride analysis is required, select the flow path for sample collection by turning CV-612 (Dilution Water to Flush Sample Loop Valve) that is to be used for chloride blank (e.g. - A loop that was **NOT** activated in sample trap enclosure).

☐ 2.1.11 Repeat Steps 2.1 5 through 2.1.8, if chloride analysis is required.

2.2 Gas Sample Retrieval

2.2.1 **IF** no Gamma Isotopic Gas sample and/or Hydrogen sample is needed, proceed to the next enclosure.

☐ 2.2.2 Using a gas tight syringe, insert the needle into the 30 ml gas tank.

☐ 2.2.3 Withdraw 1 cc of sample and lock the syringe.

☐ 2.2.4 Withdraw the needle.

☐ 2.2.5 Repeat Steps 2.2.1 through 2.2.3 three times with separate syringes (1 syringe for the gas Geli and 3 syringes for the hydrogen samples).

☐ 2.2.6 Proceed to Enclosure 4.16 (Gas Tank Nitrogen Purge).

Continuous Use

1. Initial Conditions

_____ _____ 1.1 The Limits and Precautions of this procedure have been reviewed and any conflicts found have been resolved.
Date

_____ _____ 1.2 Ensure complete Enclosure 4.6 (Panel Preparation).
Date

_____ _____ 1.3 The R&R and Auto Logs have been reviewed, evaluated, and determined to allow operations.
Date

2. Procedure

Check (√) as completed.

2.1 30 ml Gas Tank Purge

☐ 2.1.1 Ensure closed SV-203 (PALSS Low Range Gas Tank Pressure Isolation).

2.1.2 Open the following valves:

- ☐ SV-202 (PALSS Nitrogen Supply)
- ☐ SV-204 (PALSS 30 ml Gas Tank Outlet Isolation)
- ☐ SV-206 (PALSS 30 ml Gas Tank Inlet Isolation)
- ☐ CV-103 (PALSS Liquid Tank Outlet Isolation)
- ☐ CV-104 (PALSS Liquid Tank Isolation)
- ☐ CV-401 (PALSS Liquid Tank Throttle)

☐ 2.1.3 Wait at least one minute for the nitrogen to purge the water from the 30 ml gas tank.

2.2 500 ml Gas Tank Purge

2.2.1 Open the following valves:

- ☐ SV-205 (PALSS 500 ml Gas Tank Outlet Isolation)
- ☐ SV-207 (PALSS 500 ml Gas Tank Inlet Isolation)

2.2.2 Close the following valves:

- ☐ SV-204 (PALSS 30 ml Gas Tank Outlet Isolation)
- ☐ SV-206 (PALSS 30 ml Gas Tank Inlet Isolation)

☐ 2.2.3 Wait at least one minute for the nitrogen to purge the water from the 500 ml gas tank.

Continuous Use

2.3 Gas Tank Evacuation

2.3.1 Close the following valves:

- ☐ SV-202 (PALSS Nitrogen Supply)
- ☐ CV-103 (PALSS Liquid Tank Outlet Isolation)
- ☐ CV-104 (PALSS Liquid Tank Isolation)
- ☐ CV-401 (PALSS Liquid Tank Throttle)

2.3.2 Ensure closed the following valves:

- ☐ CV-102 (PALSS pH Probe Inlet Isolation)
- ☐ CV-105 (PALSS Liquid Tank Outlet Isolation)

2.3.3 Open the following valves:

- ☐ SV-208 (PALSS Air Educator Inlet Isolation)
- ☐ SV-201 (PALSS Air Educator Outlet Isolation)

☐ 2.3.4 Wait at least 20 seconds.

2.4 System Restoration

2.4.1 Ensure closed the following valves:

- ☐ SV-206 (PALSS 30 ml Gas Tank Inlet Isolation)
- ☐ SV-204 (PALSS 30 ml Gas Tank Outlet Isolation)

2.4.2 Close the following valves:

- ☐ SV-207 (PALSS 500 ml Gas Tank Inlet Isolation)
- ☐ SV-205 (PALSS 500 ml Gas Tank Outlet Isolation)
- ☐ SV-201 (PALSS Air Educator Outlet Isolation)
- ☐ SV-208 (PALSS Air Educator Inlet Isolation)

Continuous Use

1. Initial Conditions

_____ _____ 1.1 The Limits and Precautions of this procedure have been reviewed and any conflicts found have been resolved.
Date

_____ _____ 1.2 The R&R and Auto Logs have been reviewed, evaluated, and determined to allow operations.
Date

2. Procedure

Check (√) as completed.

_____ _____ **2.1 Motor Operated Valves**
Date

2.1.1 Ensure closed the following valves:

- ☐ PB-1 (ND Pump Discharge Isolation Valve)
- ☐ PB-2 (NC Hot Legs A and C Sample Valve)
- ☐ PB-3 (PALSS Demineralized Water Isolation valve)
- ☐ PB-4 (PALSS Strainer Flush Valve)

_____ _____ **2.2 Solenoid Valves**
Date

2.2.1 Ensure closed the following valves:

- ☐ SV-201 (PALSS Air Educator Outlet Isol)
- ☐ SV-202 (PALSS Nitrogen Supply)
- ☐ SV-203 (PALSS Low Range Gas Tank Press Isol)
- ☐ SV-204 (PALSS 30 ml Gas Tank Outlet Isol)
- ☐ SV-205 (PALSS 500 ml Gas Tank Outlet Isol)
- ☐ SV-206 (PALSS 30 ml Gas Tank Inlet Isol)
- ☐ SV-207 (PALSS 500 ml Gas Tank Inlet Isol)
- ☐ SV-208 (PALSS Air Educator Inlet Isolation)

2.2.2 Ensure "OFF" SV-209 (PALSS pH Buffer Tank Isolation).

Continuous Use

_____ _____ **2.3 Control Valves**
Date

2.3.1 Ensure closed the following valves:

- ☐ CV-101 (PALSS Liquid Tank Inlet Isolation)
- ☐ CV-102 (PALSS pH Probe Inlet Isolation)
- ☐ CV-103 (PALSS Liquid Tank Outlet Isolation)
- ☐ CV-104 (PALSS Liquid Tank Trap Outlet Isol)
- ☐ CV-105 (PALSS pH Probe Housing Outlet Isol)
- ☐ CV-106 (PALSS Nitrogen Liquid Tank Isolation)
- ☐ CV-107 (PALSS Rheodyne Loop Isolation Inlet)

_____ _____ **2.4 Outside Panel**
Date

☐ 2.4.1 **IF** NM Automation Panel is **NOT** in service, close the nitrogen cylinder isolation valve on the nitrogen bottle.

☐ 2.4.2 **IF** NM Automation Panel is in service, leave the nitrogen cylinder isolation valve open.

☐ 2.4.3 Return the valve power switch, SW-1 to the "OFF" position.

☐ 2.4.4 Return the key switch, KS-1 to the "OFF" position.

2.5 Inside Panel

NOTE:
- Section 2.5, 2.6, and 2.7 can be done from now to the closing of the procedure as long as it is completed before the closing of the procedure.
- **IF** pH calibrations were **NOT** performed, Steps 2.5.1, 2.5.2, 2.5.4, and 2.5.5 should be marked N/A.

CAUTION: Before connecting quick disconnects between buffer storage containers and buffer tanks, relieve buffer tank pressure.

☐ 2.5.1 Fill Buffer Tank A with pH buffer 4.0 (or appropriate buffer) solution.

2.5.1.1 Using quick disconnects, fill buffer tank from bottom with appropriate solution.

Continuous Use

2.5.1.2 Ensure tank is full by allowing buffer solution to overflow out of the top of the tank.

2.5.1.3 Drain approximately 200 ml of buffer from the tank to allow for pressurization.

☐ 2.5.2 Fill Buffer Tank B with pH buffer 7.0 (or appropriate buffer) solution.

2.5.2.1 Using quick disconnects, fill buffer tank from bottom with appropriate solution.

2.5.2.2 Ensure tank is full by allowing buffer solution to overflow out of the top of the tank.

2.5.2.3 Drain approximately 200 ml of buffer from the tank to allow for pressurization.

NOTE: **WHEN** filling 50 ml water cylinder, care should be taken to **NOT** contaminate contents. Filling with Super-Q water should be accomplished via quick disconnects attached to the Super-Q lines in the Hot Lab. Demineralized water may be used only with the consent of the PALSS Test Coordinator during normal runs or the Chemistry Manager for accident situations.

☐ 2.5.3 Flush and fill the 50 ml water cylinder with Super-Q water.

☐ 2.5.4 Attach the flexible tubing on the 4.0 pH calibration tank to the SV-209A fitting, then position the cylinder in the bracket.

☐ 2.5.5 Attach the flexible tubing on the 7.0 pH calibration tank to the SV-209B fitting, then position the cylinder in the bracket.

☐ 2.5.6 Attach the 50 ml water cylinder to the flexible tubing, then place the cylinder on the sample shelf.

NOTE: N/A the following step if no sample was pulled via the septum.

☐ 2.5.7 Replace 30 ml gas tank septum.

Continuous Use

2.6 Additional Control Valves

_____ Date _____ 2.6.1 Close the following valves:

CV-603 (Nitrogen Stripping Supply to Liquid Tank)
CV-604 (Nitrogen Purge Source to Gas Tank)

_____ Date _____ 2.6.2 Close or ensure closed CV-606 (Air Supply To Sample Panel).

☐ 2.6.3 Ensure CV-609 (Nitrogen/Air Supply) is in "INSTRUMENT AIR" position.

☐ 2.6.4 Ensure CV-610 (Nitrogen/Air Purge) is in the "NITROGEN" Position.

2.7 KC Valve Manipulation

NOTE: It is only necessary to isolate the KC cooling valves on the Unit that was sampled.

2.7.1 Returning steps to get to the proper post KC alignment.

- For Unit 1KC valves, complete Section 2.7.2.
- For Unit 2KC valves, complete Section 2.7.3.

_____ Date _____ **2.7.2 Unit 1 Component Cooling Valves**

☐ 2.7.2.1 Close or ensure closed 1-KC-A08 (PALSP Hx Inlet)
(location AB-543, rm 238, FF-54)

☐ 2.7.2.2 Close or ensure closed 1-KC-A10 (PALSP Hx Outlet)
(location AB-543, rm 238, FF-54)

☐ 2.7.2.3 Lock closed or ensure lock closed 1-KC-D03 (ESS Sup HDR A PALSS Isol)
(location AB-577-10, HH-54)

☐ 2.7.2.4 Lock closed or ensure lock closed 1-KC-D04 (ESS Sup HDR B PALSS Isol)
(location AB-577-10, HH-54)

☐ 2.7.2.5 Lock closed or ensure lock closed 1-KC-D05 (ESS RTN HDR A PALSS Isol)
(location AB-560-12, HH-55)

Continuous Use

☐ 2.7.2.6 Lock closed or ensure lock closed 1-KC-D06 (ESS RTN HDR B PALSS Isol)
(location AB-560-12, HH-55)

_____ _____ **2.7.3 Unit-2 Component Cooling Valves**
Date

☐ 2.7.3.1 Close or ensure closed 2-KC-A08 (PALSP Hx Inlet)
(location AB-543, rm 238, FF-54)

☐ 2.7.3.2 Close or ensure closed 2-KC-A10 (PALSP Hx Outlet)
(location AB-543, rm 238, FF-54)

☐ 2.7.3.3 Lock closed or ensure lock closed 2-KC-D03 (ESS Sup HDR A PALSS Isol)
(location AB-577-10, HH-54)

☐ 2.7.3.4 Lock closed or ensure lock closed 2-KC-D04 (ESS Sup HDR B PALSS Isol)
(location AB-577-10, HH-59)

☐ 2.7.3.5 Lock closed or ensure lock closed 2-KC-D05 (ESS RTN HDR A PALSS Isol)
(location AB-560-12, FF-58)

☐ 2.7.3.6 Lock closed or ensure lock closed 2-KC-D06 (ESS RTN HDR B PALSS Isol)
(location AB-560-12, FF-58)

Reference Use

1. Initial Conditions

_____ _____ 1.1 Ensure Hot Lab fume hood and the GC (Gas Chromatograph) exhaust are operable.
Date

_____ _____ 1.2 All liquid sample dilutions shall be performed in the Hot Lab fume hood.
Date

_____ _____ 1.3 A 14cc gas vial has been evacuated and placed in a plastic bag in the fume hood, when performing gas gamma isotopic analysis.
Date

_____ _____ 1.4 A clean 60 ml (wide mouth) bottle is prepared when performing liquid gamma isotopic analysis.
Date

_____ _____ 1.5 **IF** boron analysis is to be performed, verify appropriate reagents have been prepared and the standards have been run.
Date

_____ _____ 1.6 **IF** stripped Hydrogen sample is to be analyzed, verify the Gas Chromatograph has been started up and calibrated per the appropriate procedure.
Date

_____ _____ 1.7 The sample requisition forms and labels for liquid and gas or total Rheodyne samples are prepared, if needed.
e

_____ _____ 1.8 **IF** chloride analysis is needed, verify the Ion Chromatograph has been started up and calibrated per the appropriate procedure or the chloride probe has been started up and calibrated per the appropriate procedure.
Date

Reference Use

2. Procedure

Check (√) as completed.

NOTE:
- The analysis can be done in any order and/or at the same time. It is best to do the gas and liquid Ge analysis first so that the count room will have more time to complete the analysis. The chloride analysis should be done last since it does **NOT** have to be done in the three hour time limit.
- Samples will be analyzed for ONLY the analysis specified by Chemistry Management (e.g. - may require boron only or gamma only).

2.1 Gas Analysis

2.1.1 Gas Gamma Spectra

☐ 2.1.1.1 Inject 1 cc of gas sample into a previously evacuated glass vial.

☐ 2.1.1.2 Sample volume (based on injecting 1cc of gas) is:

UNIT I
0.87 cc = Actual Sample Volume injected.

UNIT II
0.85 cc = Actual Sample Volume injected.

☐ 2.1.1.3 Place the glass vial into a clean plastic zip lock bag with the following information:

Sample_____

Sample Collected By_____

Date_____ Time _____

Sample Volume _____

☐ 2.1.1.4 Route the sample to the Count Room for Ge Spectral Analysis.

Reference Use

2.2 Liquid Gamma Spectra

2.2.1 Calculate actual volume (ml) of reactor coolant.

NOTE:	The established starting point for an accident is to dilute the 100 µl or 5.0 mls Rheodyne loop to 250 mls. 10 mls of the 250 mls would then be diluted to 50 mls and counted. This may **NOT** be an adequate dilution depending on the activity of the sample and can be changed per the Chemistry Manager. Remember that the total volume of 250 mls is the volume used to do all of the analysis.

RCS (ml) = (sample loop vol. / total volume) X 10 ml of total volume

total volume = sample volume plus dilution water = 250 ml

UNIT 1
5 ml = (5.13 ml/250 ml) X 10 ml = 0.02052 x 10 = 0.2052 ml
1 ml = (1.11 ml/250 ml) X 10 ml = 0.00444 X 10 = 0.0444 ml
100µl = (0.1039 ml/250ml) X 10 ml = 0.0004156 X 10 = 0.004156 ml

UNIT 2
5 ml = (5.13 ml/250 ml) X 10 ml = 0.02052 X 10 = 0.2052 ml
1 ml = (1.11 ml/250 ml) X 10 ml = 0.00444 X 10 = 0.0444 ml
100µl = (0.1054 ml/250ml) X 10 ml = 0.0004216 X 10 = 0.004216 ml

☐ 2.2.2 Dilute Rheodyne loop sample to 250 mls with Super Q Water.

☐ 2.2.3 Add 10 ml of this diluted sample (250 mls) into a 60 ml (wide mouth) bottle containing 40 ml of Super Q water.

Reference Use

NOTE: The sample time shall be the time the Rheodyne sample was trapped.

☐ 2.2.4 Place the bottle into a clean plastic zip lock bag with the following information:

Sample_____

Sample Collected By_____

Date_____ Time _____

Sample Volume_____

☐ 2.2.5 Submit the liquid geli to the count room for analysis.

2.3 Hydrogen (cc/kg)

☐ 2.3.1 Analyze two (or if necessary three) syringes of gas obtained from the panel by the appropriate procedure.

NOTE: **IF** a significant difference occurs in the first two samples, the third syringe should be analyzed and the two that are closest together should be averaged.

☐ 2.3.2 Average the results.

☐ 2.3.3 Calculate the result as follows:

UNIT I
% H_2 X 11.51 = cc/kg H_2

UNIT II
% H_2 X 11.71 = cc/kg H_2

☐ 2.3.4 Report the results in cc/kg of H_2.

2.4 Liquid Boron Analysis

☐ 2.4.1 Analyze the sample for boron per the appropriate procedure.

☐ 2.4.2 Use the following dilution factors in obtaining the correct boron and/or chloride results.

Reference Use

UNIT I
5 ml = 250 ml / 5.13 ml = 48.73
1 ml = 250 ml / 1.11 ml = 225.23
100 µl = 250 ml / 0.1039 ml = 2406.16

UNIT II
5 ml = 250 ml / 5.13 ml = 48.73
1 ml = 250 ml / 1.13 ml = 221.24
100 µl = 250 ml / 0.1054 ml = 2371.92

☐ 2.4.3 Obtain a boron concentration that will correlate directly with the normal Reactor Coolant sample by multiplying analyzed sample concentration by the dilution factor in Section 2.4.2.

2.5 Chloride Analysis

☐ 2.5.1 Prepare dilution water blank by diluting Rheodyne loop selected for chloride blank to 250 ml with Super Q water.

☐ 2.5.2 Analyze sample and sample dilution water blank for chlorides per the appropriate procedure.

☐ 2.5.3 Subtract sample dilution water blank results from the sample result for valid chloride number.

☐ 2.5.4 Obtain a chloride concentration that will correlate directly with the normal Reactor Coolant sample by multiplying analyzed sample concentration by the dilution factor in Section 2.4.2.

2.6 Total Gas/Liquid Isotopic Analysis

☐ 2.6.1 **IF** a combined gas/liquid isotopic analysis is desired, submit the vial to Radiation Protection.

2.7 Report all results on Enclosure 4.1, (Controlling Procedure for an Accident Situation).

Reference Use

1. Initial Conditions

_____ Date _____ 1.1 Ensure Hot Lab fume hood and the GC (Gas Chromatograph) exhaust are operable.

_____ Date _____ 1.2 All liquid sample dilutions shall be performed in the Hot Lab fume hood.

_____ Date _____ 1.3 A 14cc gas vial has been evacuated and placed in a plastic bag in the fume hood, when performing gas gamma isotopic analysis.

_____ Date _____ 1.4 A clean 60 ml (wide mouth) bottle is prepared when performing liquid gamma isotopic analysis.

1.5 **IF** boron analysis is to be performed, verify adequate reagents have been prepared and the standards have been run.

_____ Date _____ 1.6 **IF** stripped Hydrogen sample is to be analyzed, verify the Gas Chromatograph has been started up and calibrated per the appropriate procedure.

_____ e _____ 1.7 The sample requisition forms and labels for liquid and gas or total Rheodyne samples are prepared, if needed.

_____ Date _____ 1.8 **IF** chloride analysis is needed, verify the Ion Chromatograph has been started up and calibrated per appropriate procedure or chloride probe has been started up and calibrated per the appropriate procedure.

Reference Use

2. Procedure

Check (√) as completed.

NOTE:	• The analysis can be done in any order and/or at the same time. It is best to do the gas and liquid Ge Spectral analysis first so that the count room will have more time to complete the analysis. The chloride analysis should be done last since it does **NOT** have to be done in the three hour time limit. • PALSS Test Coordinator (for PT Run) may authorize analyzing for only specific parameters as needed (e.g. - pulling GSA via PALSS when normal NC Sample point is inoperable).

2.1 Gas Analysis

NOTE:	This section can be done in the NM Lab if desired to do so during PT.

2.1.1 Gas Gamma Spectra

☐ 2.1.1.1 Inject 1 cc of gas sample into a previously evacuated glass vial.

☐ 2.1.1.2 Sample volume is derived from the following:

UNIT I
0.87 cc = Actual Sample Volume Injected

UNIT II
0.85 cc = Actual Sample Volume Injected.

☐ 2.1.1.3 Place the glass vial into a clean plastic zip lock bag with the following information:

- Sample
- Sample Collected By
- Date
- Time
- Sample Volume

☐ 2.1.1.4 Route the sample to the Count Room for Ge Spectral Analysis.

Reference Use

2.2 Liquid Gamma Spectra

NOTE: During Periodic Testing, the sample collected for Liquid Gamma Spectra (0.1 ml, 1.0 ml, and/or 5.0 ml) will be diluted to 50 ml for counting purposes. This is done to ensure the accuracy of the results. The actual loop volume will be entered on the sample request form. {PIP #0-C98-2569}

Sample Loop Volumes

UNIT 1	UNIT 2
5 ml = 5.13 ml	5 ml = 5.13 ml
1 ml = 1.11 ml	1 ml = 1.13 ml
100 µl = 0.1039 ml	100 µl = 0.1054 ml

☐ 2.2.1 Dilute Rheodyne loop designated for Gamma Isotopic Analysis to 50 mls with Super Q Water.

NOTE: The sample time shall be the time the Rheodyne sample was trapped.

2.2.2 Place the bottle into a clean plastic zip lock bag with the following information:

- Sample
- Sample Collected By
- Date
- Time
- Sample Volume

☐ 2.2.3 Submit the liquid sample to the count room for analysis.

Reference Use

☐ **2.3 Hydrogen (cc/kg)**

☐ 2.3.1 Analyze two syringes (or if necessary three) of gas obtained from the panel per appropriate procedure or lab method.

NOTE: **IF** a significant difference occurs in first two samples, the third syringe should be analyzed and the two that are closest together should be averaged.

☐ 2.3.2 Average the results.

☐ 2.3.3 Calculate the result as follows:

UNIT I
% H_2 X 11.51 = cc/kg H_2

UNIT II
% H_2 X 11.71 = cc/kg H_2

☐ 2.3.4 Report the results in cc/kg of H_2.

2.4 Liquid Boron Analysis

2.4.1 Dilute rheodyne loop sample to 250 mls with Super-Q Water.

☐ 2.4.2 Analyze the sample for boron per appropriate procedure or lab method.

☐ 2.4.3 Use the following dilution factors in obtaining the correct boron and/or chloride results.

UNIT I
5 ml = 250 ml / 5.13 ml = 48.73
1 ml = 250 ml / 1.11 ml = 225.23
100 µl = 250 ml / 0.1039 ml = 2406.16

UNIT II
5 ml = 250 ml / 5.13 ml = 48.73
1 ml = 250 ml / 1.13 ml = 221.24
100 µl = 250 ml / 0.1054 ml = 2371.92

☐ 2.4.4 Obtain a boron concentration that will correlate directly with the normal Reactor Coolant sample by multiplying analyzed sample concentration by the dilution factor in Section 2.4.3.

Reference Use

2.5 Chloride Analysis

☐ 2.5.1 Prepare dilution water blank by diluting Rheodyne loop selected for chloride blank to 250 ml.

☐ 2.5.2 Analyze sample and sample dilution water blank for chlorides per per appropriate procedure or lab method.

☐ 2.5.3 Subtract sample dilution water blank results from the sample result for valid chloride number.

☐ 2.5.4 Obtain a chloride concentration that will correlate directly with the normal Reactor Coolant sample by multiplying analyzed sample concentration by the dilution factor in Section 2.4.3.

2.6 Total Gas/Liquid Isotopic Analysis

☐ 2.6.1 **IF** a combined gas/liquid isotopic analysis is desired, submit the vial to Radiation Protection.

2.7 During Periodic Testing, report all results on the Periodic Test Enclosure.

Continuous Use

1. Initial Conditions

_____ _____ 1.1 LT-3 is lit indicating the filter/strainer is clogged.
Date

_____ _____ 1.2 The Limits and Precautions of this procedure have been reviewed and any conflicts found have been resolved.
Date

_____ _____ 1.3 Ensure complete Enclosure 4.6 (Panel Preparation).
Date

_____ _____ 1.4 The R&R Log and Area Logs have been reviewed, evaluated, and determined to allow operations.
Date

2. Procedure

Check (√) as completed.

2.1 Ensure closed the following valves:

- ☐ PB-1 (ND Reactor Sump Sample Valve)
- ☐ PB-2 (NC Hot Legs A and C Sample Valve)
- ☐ PB-3 (PALSS Demin Water Flush Valve)
- ☐ PB-4 (PALSS Strainer Flush Return Valve)

2.2 Close the following the valves:

- ☐ CV-101 (PALSS Liquid Tank Inlet Isolation)
- ☐ CV-104 (PALSS Liquid Tank Isolation)

☐ 2.3 Ensure closed CV-107 (PALSS Rheodyne Loop Sample Inlet Isolation).

2.4 Open the following valves:

- ☐ PB-4 (PALSS Inlet Filter/Strainer Backflush Valve)
- ☐ PB-3 (PALSS Demin Water Flush Valve)

NOTE: **IF** aligned to the VCT waste route, it may be necessary to activate Switch 111 on the control panel to increase YM pressure.

☐ 2.5 Activate Switch 111 (YM Booster Pump), if necessary.

☐ 2.6 Wait at least 3 minutes for the strainer to be flushed.

☐ 2.7 Deactivate Switch 111 (YM booster pump) if used.

Continuous Use

2.8 Close the following valves:

- ☐ PB-4 (PALSS Inlet Filter/Strainer Backflush Valve)
- ☐ PB-3 (PALSS Demin Water Flush Valve)

NOTE:	**IF** the Clogged Filter light is still on and an adequate flow **CANNOT** be obtained on FG-1, stop sampling and notify the Chemistry Manager during an accident situation. Notify the Testing Coordinator during a periodic test. A work request will have to be submitted to investigate and repair.

☐ 2.9 Sampling may be resumed. Refer back to Enclosure 4.11 (Reactor Coolant (NC) or Residual Heat Removal (ND) System Sample Flush Traps).

Continuous Use

1. Initial Conditions

_____ Date _____ 1.1 Limits and Precautions of this procedure have been reviewed and any conflicts found have been addressed and resolved.

_____ Date _____ 1.2 The R&R and Auto Logs have been reviewed, evaluated, and determined to allow operation.

_____ Date _____ 1.3 Both pH calibration tanks shall be in place.

_____ Date _____ 1.4 Ensure all valves on control panel are closed.

2. Procedure

Check (√) as completed.

2.1 Control Panel Preparation

NOTE: **IF** any item on the control or sample panel is **NOT** clearly identified, refer to Enclosure 4.24 (Flow Diagrams and Drawings).

☐ 2.1.1 Ensure the valve power switch (SW-1) is in the "OFF" position.

☐ 2.1.2 Ensure the AC switch (KS-1) is in the "OFF" position.

☐ 2.1.3 Adjust Control Valve CV-401 to 0.0 on the control dial.

☐ 2.1.4 Adjust Control Valve CV-402 to 0.0 on the control dial.

NOTE: The green lights should be lit on PB-1 through PB-4 after executing the next step.

☐ 2.1.5 Insert the PALSS key into the AC switch (KS-1) and turn the system power "ON".

☐ 2.1.6 Turn "ON" the lamp test switch (SW-2) to ensure all lamps on the control panel are functioning.

☐ 2.1.7 Turn "OFF" the lamp test switch (SW-2).

☐ 2.1.8 Ensure all valves on the control panel are in the "CLOSED" position.

☐ 2.1.9 Turn the valve power switch (SW-1) to the "ON" position.

Continuous Use

2.2 Sample Panel Preparation

NOTE: Nitrogen supply should be at least 500 psig. Bottles should be replaced as necessary.

☐ 2.2.1 Ensure the nitrogen delivery line to the PALSS panel is attached.

☐ 2.2.2 Open or ensure open the cylinder valve on top of the nitrogen cylinder.

☐ 2.2.3 Set or ensure the Nitrogen Regulator to 110 psig.

2.2.4 Open or ensure open the following valves:

- ☐ CV-603 (Nitrogen Stripping Supply to Liquid Tank)
- ☐ CV-604 (Nitrogen Purge to Gas Tank)
- ☐ CV-606 (Air Supply To Sample Panel)

NOTE: This next valve supplies CV-101 through CV-107.

☐ 2.2.5 Ensure the three way Control Valve CV-609 (Nitrogen/Air Supply) is in the "AIR SUPPLY" position.

NOTE: This next valve supplies the purge gas for the panel.

☐ 2.2.6 Ensure the three way Control Valve CV-610 (Nitrogen/Air Purge) is in the "NITROGEN SUPPLY" position.

NOTE: The following gas regulating valves may be adjusted to fall within the correct ranges. PALSS Test Coordinator should be informed of any adjustments. If no adjustment is made, the 'Adjusted to' blank should be N/A'ed.

☐ 2.2.7 Ensure gas regulating valve CV-602 is set at 38 to 42 psig.

Actual _____ Adjusted to _____

☐ 2.2.8 Ensure gas regulating valve CV-605 is set at 78 to 82 psig.

Actual _____ Adjusted to _____

Continuous Use

2.3 Calibration of pH Meter

2.3.1 pH Probe Purge with Nitrogen

2.3.1.1 Purge the water from the pH probe assembly with nitrogen by performing the following steps.

2.3.1.2 Open the following valves:

- ☐ SV-202 (PALSS Nitrogen Supply)
- ☐ SV-205 (PALSS 500 ml Gas Tank Outlet Isol)
- ☐ SV-207 (PALSS 500 ml Gas Tank Inlet Isol)
- ☐ CV-103 (PALSS Liquid Tank Outlet Isol)
- ☐ CV-102 (PALSS pH Probe Inlet Isol)
- ☐ CV-105 (PALSS pH Probe Outlet Isol)

☐ 2.3.1.3 After one minute stop the nitrogen purge by, closing CV-105 (PALSS pH Probe Outlet Isol).

2.4 Pressurize PALSS pH A Buffer Tank

NOTE: During a PT run, Buffer Solution A will be a 4.0 pH buffer solution. This solution may vary during an accident situation.

☐ 2.4.1 Move SV-209 (PALSS pH Buffer Tank Isolation) to the "A" position.

☐ 2.4.2 Wait at least 30 seconds.

☐ 2.4.3 Move SV-209 (PALSS pH Buffer Tank Isolation) to the "OFF" position.

2.5 Evacuate the pH Probe Housing (place under vacuum)

☐ 2.5.1 Close SV-202 (PALSS Nitrogen Supply).

2.5.2 Open the following valves:

- ☐ SV-208 (PALSS Air Educator Inlet Isolation)
- ☐ SV-201 (PALSS Air Educator Outlet Isolation)

☐ 2.5.3 **WHEN** PG-4 drops to less than30.0 psia, open SV-203 (PALSS Low Range Gas Tank Pressure Isolation).

Continuous Use

☐ 2.5.4 **WHEN** pressure on PG-4 (PG-5 may be used for greater accuracy) drops too less than 3.0 psia and stabilizes, isolate the vacuum by closing CV-102 (PALSS pH Probe Inlet Isolation).

2.5.5 Close the following valves:

- ☐ CV-103 (PALSS Liquid Tank Outlet Isolation)
- ☐ SV-201 (PALSS Air Educator Outlet Isolation)
- ☐ SV-208 (PALSS Air Educator Inlet Isolation)
- ☐ SV-203 (PALSS Low Range Gas Tank Pressure Isolation)

2.6 Fill pH Probe Housing with Buffer Solution A

NOTE: The calibration fluid is under pressure and the pH probe is under vacuum, this will move the pH buffer to the pH probe.

☐ 2.6.1 Move SV-209 to the "A" position.

☐ 2.6.2 Wait at least 30 seconds.

☐ 2.6.3 Move SV-209 (PALSS pH Buffer Tank Isolation) to the "OFF" position.

2.7 pH Probe Purge with Nitrogen

NOTE: Sections 2.7, 2.8, 2.9 and 2.10 may be N/A'ed at the discretion of the PALSS Test Coordinator if it is determined that multiple flushes of pH housing with pH Buffer is **NOT** necessary.

2.7.1 Purge the pH buffer from the pH probe assembly with nitrogen by performing the following steps.

☐ 2.7.1.1 Open SV-202 (PALSS Nitrogen Supply).

2.7.1.2 Open or ensure open the following valves:

- ☐ SV-205 (PALSS 500 ml Gas Tank Outlet Isol)
- ☐ SV-207 (PALSS 500 ml Gas Tank Inlet Isol)

Continuous Use

2.7.1.3 Open the following valves:

- ☐ CV-103 (PALSS Liquid Tank Outlet Isol)
- ☐ CV-102 (PALSS pH Probe Inlet Isol)
- ☐ CV-105 (PALSS pH Probe Outlet Isol)

☐ 2.7.1.4 After one minute stop the nitrogen purge by, closing CV-105 (PALSS pH Probe Outlet Isol).

2.8 Pressurize PALSS pH A Buffer Tank with Nitrogen

☐ 2.8.1 Move SV-209 (PALSS pH Buffer Tank Isolation) to the "A" position.

☐ 2.8.2 Wait at least 30 seconds.

☐ 2.8.3 Move SV-209 (PALSS pH Buffer Tank Isolation) to the "OFF" position.

2.9 Evacuate the pH Probe Housing(place under vacuum)

☐ 2.9.1 Close SV-202 (PALSS Nitrogen Supply).

2.9.2 Open the following valves:

- ☐ SV-208 (PALSS Air Educator Inlet Isolation)
- ☐ SV-201 (PALSS Air Educator Outlet Isolation)

☐ 2.9.3 **WHEN** PG-4 drops to less than 30.0 psia, open SV-203 (PALSS Low Range Gas Tank Pressure Isolation).

☐ 2.9.4 **WHEN** pressure on PG-4 (PG-5 may be used for greater accuracy) drops to less than 3.0 psia and stabilizes, isolate the vacuum by, closing CV-102 (PALSS pH Probe Inlet Isolation).

2.9.5 Close the following valves:

- ☐ CV-103 (PALSS Liquid Tank Outlet Isol)
- ☐ SV-201 (PALSS Air Educator Outlet Isolation)
- ☐ SV-208 (PALSS Air Educator Inlet Isolation)

Continuous Use

2.10 Fill pH Probe Housing with Buffer Solution A

NOTE: The calibration fluid is under pressure and the pH probe is under vacuum, this will move the pH buffer to the pH probe.

☐ 2.10.1 Move SV-209 (PALSS pH Buffer Tank Isolation) to the "A" position.

☐ 2.10.2 Wait at least 30 seconds.

☐ 2.10.3 Move SV-209 (PALSS pH Buffer Tank Isolation) to the "OFF" position.

2.11 Calibrate the pH Meter

☐ 2.11.1 Press the "pH/ORP/TEMP" key on the pH meter until the temperature of the buffer solution is indicated.

☐ 2.11.2 Record the temperature.

Buffer temperature _____

☐ 2.11.3 Press the "pH/ORP/TEMP" key on the pH meter until the pH is indicated.

☐ 2.11.4 Press the HOLD key on the pH meter until the word Hold flashes on the left side of the LCD display.

NOTE: The Hold function causes the pH meter to maintain a constant output and alarm condition. This allows the electrode to be removed for calibration in a buffer solution without process upset. Also, the solution temperature compensation feature is disabled in the Hold mode (this allows calibration of the meter to the particular temperature of the buffer used).

☐ 2.11.5 The LCD will show the pH of the buffer solution. Wait for a stable reading, then press "STD/SLOPE" pad. The words "Set 1" and "Std" will appear on the left side of the LCD display.

Continuous Use

NOTE:
- **IF** the numeric value begins to flash, there is insufficient difference in the pH solutions or the electrode may be cracked. Pressing the "pH/ORP/TEMP" pad will cancel the slope adjustment. If necessary, the electrode should be replaced and/or the procedure should be repeated.
- pH value of the 4.0 pH buffer solution at various temperatures is listed below and on the container of each buffer solution.

Temp C	0	5	10	15	20	25	30	35	40	50	60
pH 4.0 Buffer	4.01	3.99	4.00	3.99	4.00	4.00	4.01	4.02	4.03	4.06	4.09

☐ 2.11.6 Use the "↑" and "↓" keys to change the value on the display to the value of the pH buffer solution.

☐ 2.11.7 **WHEN** the correct value is displayed, press the "ENTER" pad.

☐ 2.11.8 Read and record the pH value on the pH meter LCD display for buffer solution A.

Buffer Solution A_____

2.12 pH Probe Housing Flush with Demineralized Water (YM)

☐ 2.12.1 Open CV-101 (PALSS Liquid Tank Inlet Isolation).

2.12.2 Read PG-1.

NOTE: The pressure on PG-1 should **NOT** be increasing at this point. If the pressure is increasing, it is probably due to a leaking PB valve. The Chemistry Manager should be contacted in the OSC during an accident situation. Otherwise the PALSS Test Coordinator should be contacted before proceeding to Step 2.12.3, if this occurs.

2.12.3 Open the following valves:

- ☐ CV-102 (PALSS pH Probe Inlet Isolation)
- ☐ CV-105 (PALSS pH Probe Housing Outlet Isolation)
- ☐ PB-3 (PALSS Demin Water Flush Valve)

☐ 2.12.4 Wait at least 5 minutes. The time can be varied according to the note below.

Continuous Use

☐ 2.12.5 Monitor the pH meter and flowrate to ensure a proper flush of the probe is occurring.

NOTE: The pH meter should fluctuate, FG1 should indicate flow, and PG3 should show a pressure increase. Purge may be extended, if necessary.

2.12.6 Close the following valves:

- ☐ CV-101 (PALSS Liquid Tank Inlet Isolation)
- ☐ PB-3 (PALSS Demin Water Flush Valve)

☐ 2.12.7 Close or ensure closed SV-203 (PALSS Low Range Gas Tank Pressure Isol).

2.13 Purge of the Demineralized Water with Nitrogen

☐ 2.13.1 Open SV-202 (PALSS Nitrogen Supply).

2.13.2 Ensure opened the following valves:

- ☐ SV-205 (PALSS 500 ml Gas Tank Outlet Isol)
- ☐ SV-207 (PALSS 500 ml Gas Tank Inlet Isol)

☐ 2.13.3 Open CV-103 (PALSS Outlet Liquid Tank Isolation)

☐ 2.13.4 Wait at least one minute.

☐ 2.13.5 Close CV-105 (PALSS pH Probe Outlet Isolation).

2.14 Pressurize PALSS pH B Buffer Tank

NOTE: During a PT run, Buffer Solution B will be a 7.0 pH buffer solution. This solution may vary during an accident situation.

☐ 2.14.1 Move SV-209 (PALSS pH Buffer Tank Isolation) to the "B" position.

☐ 2.14.2 Wait at least 30 seconds.

☐ 2.14.3 Move SV-209 (PALSS pH Buffer Tank Isolation) to the "OFF" position.

Continuous Use

☐ **2.15 Evacuate the pH Probe Housing (place under vacuum)**

☐ 2.15.1 Close SV-202 (PALSS Nitrogen Supply).

2.15.2 Open the following valves:

- ☐ SV-208 (PALSS Air Educator Inlet Isol)
- ☐ SV-201 (PALSS Air Educator Outlet Isol)

☐ 2.15.3 **WHEN** PG-4 drops to less than 30.0 psia, open SV-203 (PALSS Low Range Gas Tank Pressure Isol).

☐ 2.15.4 **WHEN** pressure on PG-4 (PG-5 may be used for greater accuracy) drops too less than 3.0 psia and stabilizes, isolate the vacuum by closing CV-102 (PALSS pH Probe Inlet Isol).

2.15.5 Close the following valves:

- ☐ SV-208 (PALSS Air Educator Inlet Isol)
- ☐ SV-201 (PALSS Air Educator Outlet Isol)
- ☐ CV-205 (PALSS 500 ml Gas Tank Outlet Isol)
- ☐ CV-207 (PALSS 500 ml Gas Tank Inlet Isol)
- ☐ CV-103 (PALSS Liquid Tank Outlet Isol)

☐ 2.15.6 Close or ensure closed SV-203 (PALSS Low Range Gas Tank Pressure Isol).

2.16 Fill pH Probe Housing with Buffer Solution B

NOTE: The calibration fluid is under pressure and the pH probe is under vacuum, this will move the pH buffer to the pH probe.

☐ 2.16.1 Move SV-209 (PALSS pH Buffer Tank Isolation) to the "B" position.

☐ 2.16.2 Wait at least 30 seconds.

☐ 2.16.3 Move SV-209 (PALSS pH Buffer Tank Isolation) to the "OFF" position.

Continuous Use

2.17 Purge of the pH Buffer with Nitrogen

NOTE:	Sections 2.17, 2.18, 2.19 and 2.20 may be N/A'ed at the discretion of the PALSS Test Coordinator if it is determined that multiple flushes of pH housing with pH Buffer is **NOT** necessary.

☐ 2.17.1 Open SV-202 (PALSS Nitrogen Supply).

2.17.2 Open or ensure open the following valves:

- ☐ SV-205 (PALSS 500 ml Gas Tank Outlet Isolation)
- ☐ SV-207 (PALSS 500 ml Gas Tank Inlet Isolation)

2.17.3 Open the following valves:

- ☐ CV-103 (PALSS Outlet Liquid Tank Isolation)
- ☐ CV-102 (PALSS pH Probe Inlet Isolation)
- ☐ CV-105 (PALSS pH Probe Outlet Isolation)

☐ 2.17.4 Wait at least one minute.

☐ 2.17.5 Close CV-105 (PALSS pH Probe Outlet Isolation).

2.18 Pressurize PALSS pH B Buffer Tank

☐ 2.18.1 Move SV-209 (PALSS pH Buffer Tank Isolation) to the "B" position.

☐ 2.18.2 Wait at least 30 seconds.

☐ 2.18.3 Move SV-209 (PALSS pH Buffer Tank Isolation) to the "OFF" position.

2.19 Evacuate the pH Probe Housing (place under vacuum)

☐ 2.19.1 Close SV-202 (PALSS Nitrogen Supply).

2.19.2 Open the following valves:

- ☐ SV-208 (PALSS Air Educator Inlet Isolation)
- ☐ SV-201 (PALSS Air Educator Outlet Isolation)

☐ 2.19.3 **WHEN** PG-4 drops to less than 30.0 psia, open SV-203 (PALSS Low Range Gas Tank Pressure Isolation).

Continuous Use

☐ 2.19.4 **WHEN** pressure on PG-4 (PG-5 may be used for greater accuracy) drops too less than 3.0 psia and stabilizes, isolate the vacuum by, closing CV-102 (PALSS pH Probe Inlet Isolation).

2.19.5 Close the following valves:

- ☐ SV-208 (PALSS Air Educator Inlet Isolation)
- ☐ SV-201 (PALSS Air Educator Outlet Isolation)
- ☐ CV-205 (PALSS 500 ml Gas Tank Outlet Isolation)
- ☐ CV-207 (PALSS 500 ml Gas Tank Inlet Isolation)
- ☐ CV-103 (PALSS Liquid Tank Outlet Isolation)

☐ 2.19.6 Close or ensure closed SV-203 (PALSS Low Range Gas Tank Pressure Isolation).

2.20 Fill pH Probe Housing with Buffer Solution B

NOTE: The calibration fluid is under pressure and the pH probe is under vacuum, this will move the pH buffer to the pH probe.

☐ 2.20.1 Move SV-209 (PALSS pH Buffer Tank Isolation) to the "B" position.

☐ 2.20.2 Wait at least 30 seconds.

☐ 2.20.3 Move SV-209 (PALSS pH Buffer Tank Isolation) to the "OFF" position.

2.21 Check the pH Meter

☐ 2.21.1 The LCD will show the pH of the buffer solution. Wait for a stable reading, then press "STD/SLOPE" pad two times. The words "Set 1" and "Slope" will appear on the left side of the LCD display.

Continuous Use

NOTE:
- **IF** the numeric value begins to flash, there is insufficient difference in the pH solutions or the electrode may be cracked. Pressing the "pH/ORP/TEMP" pad will cancel the slope adjustment. If necessary, the electrode should be replaced and/or the procedure should be repeated.
- pH value of each buffer solution at various temperatures is listed below and on the container of each buffer solution.

Temp ° C	0	5	10	15	20	25	30	35	40	50	60
pH 7.0 Buffer	7.12	7.11	7.07	7.05	7.03	7.00	6.99	6.99	6.97	6.97	6.98

2.21.2 Use the "↑" and "↓" keys to change the value on the display to the value of the pH buffer solution.

☐ 2.21.3 **WHEN** the correct value is displayed, press the "ENTER" pad.

☐ 2.21.4 Read and record the pH value on the pH meter LCD display for buffer solution B.

Buffer Solution B _____

☐ 2.21.5 Press "HOLD" to clear the word HOLD from LCD.

NOTE: The instrument will return to the normal operating mode for pH measurements.

2.22 pH Probe Housing Flush with Demineralized Water (YM).

☐ 2.22.1 Open CV-101 (PALSS Liquid Tank Inlet Isolation).

2.22.2 Read PG-1.

Continuous Use

NOTE:	The pressure on PG-1 should **NOT** be increasing at this point. If the pressure is increasing, it is probably due to a leaking PB valve. Contact Chemistry Manager during an accident situation. Otherwise, contact PALSS Test Coordinator before proceeding to Step 2.22.3 if this occurs.

2.22.3 Open the following valves:

- ☐ CV-102 (PALSS pH Probe Inlet Isolation)
- ☐ CV-105 (PALSS pH Probe Outlet Isolation)
- ☐ PB-3 (PALSS Demin Water Flush Valve)

☐ 2.22.4 Wait at least 5 minutes. The time can be varied according to the note below.

☐ 2.22.5 Monitor the pH meter to ensure a proper flush of the probe is occurring.

NOTE:	The pH meter should fluctuate, FG1 should indicate flow, and PG3 should show a pressure increase. Purge may be extended, if necessary.

2.22.6 Close the following valves:

- ☐ CV-101 (PALSS Liquid Tank Inlet Isolation)
- ☐ PB-3 (PALSS Demin Water Flush Valve)
- ☐ CV-105 (PALSS pH Probe Outlet Isolation)
- ☐ CV-102 (PALSS pH Probe Inlet Isolation)

2.23 **IF** necessary, place an accepted sticker on the PALSS pH meter.

NOTE:	Calibration expiration date will be 6 weeks from date of calibration, but is routinely performed monthly.

2.24 Check Slope Value

2.24.1 Press the "STD/SLOPE" key twice to enter the Slope mode. The words "Set 1" and "Slope" will appear on the left side of the LCD display.

2.24.2 Press the "STD/SLOPE" key and the "↑" key simultaneously to view the slope value on the display.

2.24.3 Record the Slope Value.

Slope Value _____

Continuous Use

2.24.4 **IF** slope value is less than 80%, report this value to the Test Coordinator for PT runs or Chemistry Manager for accident situations.

2.24.5 Press the "pH/ORP/TEMP" key to return to normal operating mode.

_____ _____ **2.25 Motor Operated Valves**
Date

2.25.1 Ensure closed the following valves:

- ☐ PB-1 (ND Pump Discharge Isolation Valve)
- ☐ PB-2 (NC Hot Legs A and C Sample Valve)
- ☐ PB-3 (PALSS Demineralized Water Isolation Valve)
- ☐ PB-4 (PALSS Strainer Flush Valve)

_____ _____ **2.26 Solenoid Valves**
Date

2.26.1 Ensure closed the following valves:

- ☐ SV-201 (PALSS Air Educator Outlet Isol)
- ☐ SV-202 (PALSS Nitrogen Supply)
- ☐ SV-203 (PALSS Low Range Gas Tank Press Isol)
- ☐ SV-204 (PALSS 30 ml Gas Tank Outlet Isol)
- ☐ SV-205 (PALSS 500 ml Gas Tank Outlet Isol)
- ☐ SV-206 (PALSS 30 ml Gas Tank Inlet Isolation)
- ☐ SV-207 (PALSS 500 ml Gas Tank Inlet Isolation)
- ☐ SV-208 (PALSS Air Educator Inlet Isolation)

☐ 2.26.2 Ensure off SV-209 (PALSS pH Buffer Tank Isolation).

_____ _____ **2.27 Control Valves**
Date

2.27.1 Ensure closed the following valves:

- ☐ CV-101 (PALSS Liquid Tank Inlet Isolation)
- ☐ CV-102 (PALSS pH Probe Inlet Isolation)
- ☐ CV-103 (PALSS Liquid Tank Outlet Isolation)
- ☐ CV-104 (PALSS Liquid Tank Trap Outlet Isol)
- ☐ CV-105 (PALSS pH Probe Housing Outlet Isol)
- ☐ CV-106 (PALSS Nitrogen Liquid Tank Isolation)
- ☐ CV-107 (PALSS Rheodyne Loop Isolation Inlet)

Continuous Use

Date _____ _____ **2.28 Outside Panel**

☐ 2.28.1 **IF** NM Automation Panel is **NOT** in service, close the Nitrogen cylinder isolation valve on the nitrogen bottle.

☐ 2.28.2 **IF** NM Automation Panel is in service, leave the Nitrogen cylinder isolation valve open.

☐ 2.28.3 Return the valve power switch, SW-1 to the "OFF" position.

☐ 2.28.4 Return the key switch, KS-1 to the "OFF" position.

2.29 Inside Panel

CAUTION: Before connecting quick disconnects between buffer storage containers and buffer tank, relieve buffer tank pressure.

☐ 2.29.1 Fill Buffer Tank A with pH buffer 4.0 (or appropriate buffer) solution.

2.29.1.1 Using quick disconnects, fill buffer tank from bottom with appropriate solution.

2.29.1.2 Verify tank is full by allowing buffer solution to overflow out of the top of the tank.

2.29.1.3 Drain approximately 200 ml of buffer from the tank to allow for pressurization.

☐ 2.29.2 Fill Buffer Tank B with pH buffer 7.0 (or appropriate buffer) solution.

2.29.2.1 Using quick disconnects, fill buffer tank from bottom with appropriate solution.

2.29.2.2 Verify tank is full by allowing buffer solution to overflow out of the top of the tank.

2.29.2.3 Drain approximately 200 ml of buffer from the tank to allow for pressurization.

☐ 2.29.3 Attach the flexible tubing on the 4.0 pH calibration tank to the SV-209A fitting. Then position the cylinder in the bracket.

Continuous Use

☐ 2.29.4 Attach the flexible tubing on the 7.0 pH calibration tank to the SV-209B fitting. Then position the cylinder in the bracket.

_____ _____ **2.30 Additional Control Valves**
Date

2.30.1 Close the following valves:

- ☐ CV-603 (Nitrogen Stripping Supply To Liquid Tank)
- ☐ CV-604 (Nitrogen Purge Source to Gas Tank)

☐ 2.30.2 Close or ensure closed CV-606 (Air Supply To Sample Panel).

☐ 2.30.3 Verify CV-609 (Nitrogen/Air Supply) is in the "INSTRUMENT AIR" Position.

2.30.4 Verify CV-610 (Nitrogen/Air Purge) is in the "NITROGEN" Position.

Continuous Use

1. Initial Conditions

_____ Date _____ 1.1 Limits and Precautions of this procedure have been reviewed and any conflicts found have been addressed and resolved.

_____ Date _____ 1.2 The R&R and Auto Logs have been reviewed, evaluated, and determined to allow operation.

2. Procedure

Check (√) as completed.

- For Unit 1 Train A Supply, complete Step 2.1.
- For Unit 1 Train B Supply, complete Step 2.2.

2.1 Unit-1 Train A Supply

☐ 2.1.1 Open 1-KC-D03 (ESS Sup HDR A PALSS Isol) (location AB-577-10, HH-54)

☐ 2.1.2 Ensure lock closed 1-KC-D04 (ESS Sup HDR B PALSS Isol) (location AB-577-10, HH-54)

☐ 2.1.3 Open 1-KC-D05 (ESS RTN HDR A PALSS Isol) (location AB-560-12, HH-55)

☐ 2.1.4 Ensure lock closed 1-KC-D06 (ESS RTN HDR B PALSS Isol) (location AB-560-12, HH-55)

2.2 Unit-1 Train B Supply

☐ 2.2.1 Ensure lock closed 1-KC-D03 (ESS Sup HDR A PALSS Isol) (location AB-577-10, HH-54)

☐ 2.2.2 Open 1-KC-D04 (ESS Sup HDR B PALSS Isol) (location AB-577-10, HH-54)

☐ 2.2.3 Ensure lock closed 1-KC-D05 (ESS RTN HDR A PALSS Isol) (location AB-560-12, HH-55)

☐ 2.2.4 Open 1-KC-D06 (ESS RTN HDR B PALSS Isol) (location AB-560-12, HH-55)

Continuous Use

☐ **2.3 Valve in PALSS Hx**

Open 1-KC-A08 (PALSS Hx Inlet)
(Location AB-543, RM 238, FF-54)

Open 1-KC-A10 (PALSS Hx Outlet)
(Location AB-543, RM 238, FF-54)

☐ 2.4 Wait ≈ 15 minutes

☐ **2.5 Valve out PALSS Hx**

Close 1-KC-A08 (PALSS Hx Inlet)
(Location AB-543, RM 238, FF-54)

Close 1-KC-A10 (PALSS Hx Inlet)
(Location AB-543, RM 238, FF-54)

2.6 Secure KC Train A

☐ Lock close 1-KC-D03 (ESS Sup HDR A PALSS Isol)
(Location AB-577-10, HH-54)

☐ Ensure lock closed 1-KC-D04 (ESS Sup HDR B PALSS Isol)
(Location AB-577-10, HH-54)

☐ Lock closed 1-KC-D05 (ESS RTN HDR A PALSS Isol)
(Location AB-560-12, HH-55)

☐ Ensure lock closed 1-KC-D06 (ESS RTN HDR B PALSS Isol)
(Location AB-560-12, HH-55)

Continuous Use

2.7 Secure KC Train B

- ☐ Ensure lock closed 1-KCD-03 (ESS Sup HDR A PALSS Isol) (Location AB-577-10, HH-54)
- ☐ Lock closed 1-KC-D04 (ESS Sup HDR B PALSS Isol) (Location AB-577-10, HH-54)
- ☐ Ensure lock closed 1-KC-D05 (ESS RTN HDR A PALSS Isol) (Location AB-560-12, HH-55)
- ☐ Lock closed 1-KC-D06 (ESS RTN HDR B PALSS Isol) (Location AB-560-12, HH-55)

Continuous Use

1. Initial Conditions

_____ Date _____ 1.1 Limits and Precautions of this procedure have been reviewed and any conflicts found have been addressed and resolved.

_____ Date _____ 1.2 The R&R Log and Area Logs have been reviewed, evaluated, and determined to allow operation.

2. Procedure

Check (√) as completed.

•For Unit 2 Train A Supply, complete Step 2.1.
•For Unit 2 Train B Supply, complete Step 2.2.

2.1 Unit-2 Train A Supply

☐ 2.1.1 Open 2-KC-D03 (ESS Sup HDR A PALSS Isol) (location AB-577-15,HH-JJ-59)

☐ 2.1.2 Ensure lock closed 2-KC-D04 (ESS Sup HDR B PALSS Isol) (location AB-577-15, HH-59)

☐ 2.1.3 Open 2-KC-D05 (ESS RTN HDR A PALSS Isol) (location AB-577-5,FF-58)

☐ 2.1.4 Ensure lock closed 2-KC-D06 (ESS RTN HDR B PALSS Isol) (location AB-577-5, FF-58)

2.2 Unit-2 Train B Supply

☐ 2.2.1 Ensure lock closed 2-KC-D03 (ESS Sup HDR A PALSS Isol) (location AB-577-15, HH-JJ-59)

☐ 2.2.2 Open 2-KC-D04 (ESS Sup HDR B PALSS Isol) (location AB-577-15, HH-59)

☐ 2.2.3 Ensure lock closed 2-KC-D05 (ESS RTN HDR A PALSS Isol) (location AB-577-5, FF-58)

☐ 2.2.4 Open 2-KC-D06 (ESS RTN Hdr B PALSS Isol) (Location AB-577-5, FF-58)

Continuous Use

☐ **2.3 Valve in PALSS Hx**

Open 2-KC-A08 (PALSS Hx Inlet)
(Location AB-543, RM 238, FF-54)

Open 2-KC-A10 (PALSS Hx Outlet)
(Location AB-543, RM 238, FF-54)

☐ 2.4 Wait ≈ 15 minutes

☐ 2.5 Valve out PALSS Hx

Close 2-KC-A08 (PALSS Hx Inlet)
(Location AB-543, RM 238, FF-54)

Close 2-KC-A10 (PALSS Hx Outlet)
(Location AB-543, RM 238, FF-54)

2.6 Secure KC Train A Supply

☐ Lock closed 2-KC-D03 (ESS Sup HDR A PALSS Isol)
(Location AB-577-10, HH-54)

☐ Ensure lock closed 2-KC-D04 (ESS Sup HDR B PALSS Isol)
(Location AB-577-10, HH-54)

☐ Lock closed 2-KC-D05 (ESS RTN HDR A PALSS Isol)
(Location AB-560-12, HH-55)

☐ Ensure lock closed 2-KC-D06 (ESS RTN HDR B PALSS Isol)
(Location AB-560-12, HH-55)

Continuous Use

2.7 Secure KC Train B Supply

- ☐ Ensure lock closed 2-KC-D03 (ESS Sup HDR A PALSS Isol) (Location AB-577-10, HH-54)
- ☐ Lock closed 2-KC-D04 (ESS Sup HDR B PALSS Isol) (Location AB-577-10, HH-54)
- ☐ Ensure lock closed 2-KC-D05 (ESS RTN HDR A PALSS Isol) (Location AB-560-12, HH-55)
- ☐ Lock closed 2-KC-D06 (ESS RTN HDR B PALSS Isol) (Location AB-560-12, HH-55)

Continuous Use

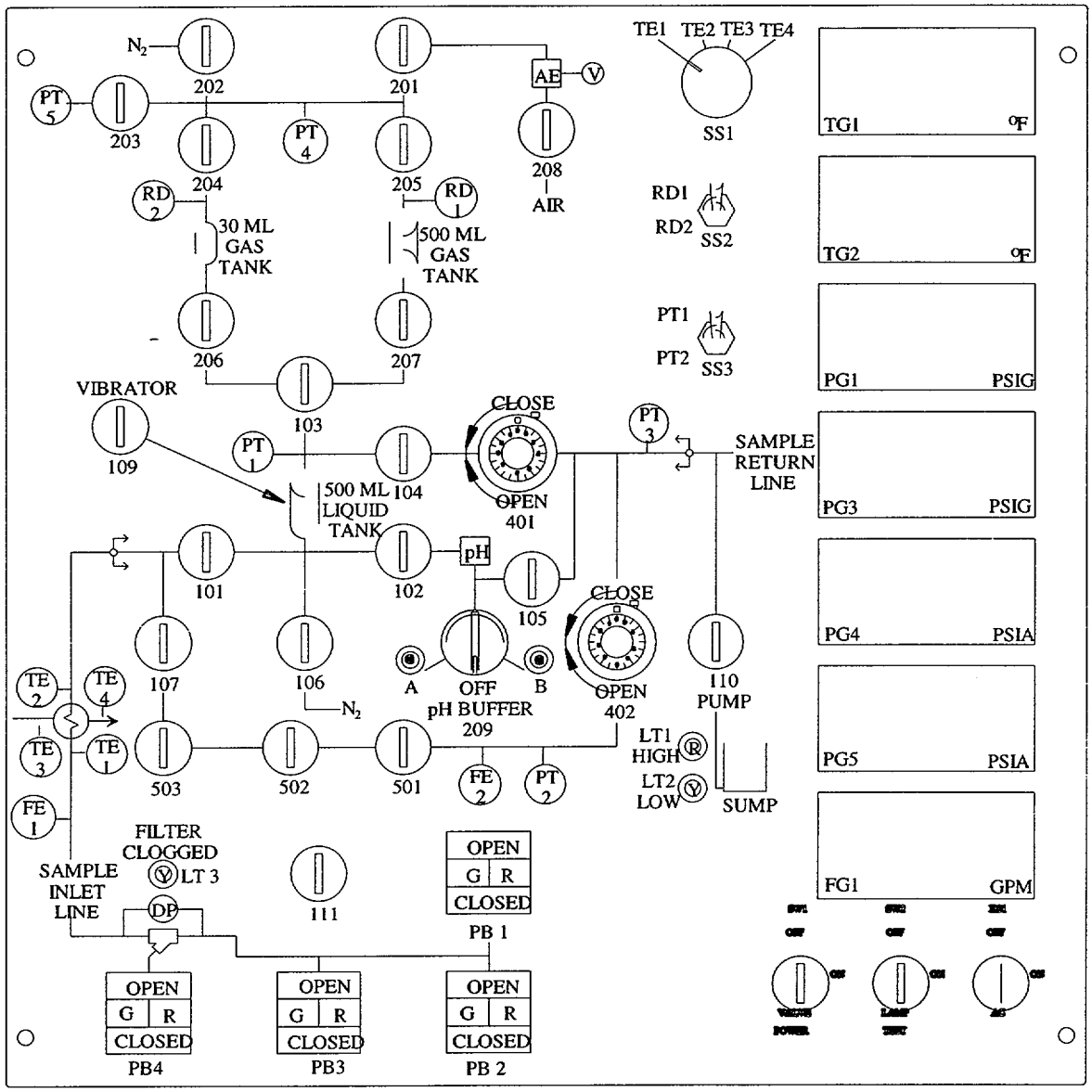

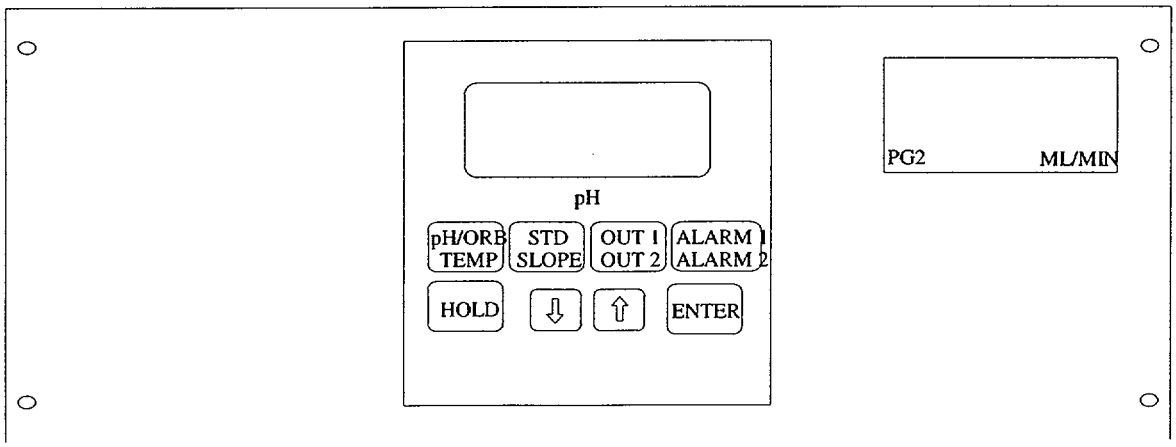

Continuous Use

Flow Diagram Elementary

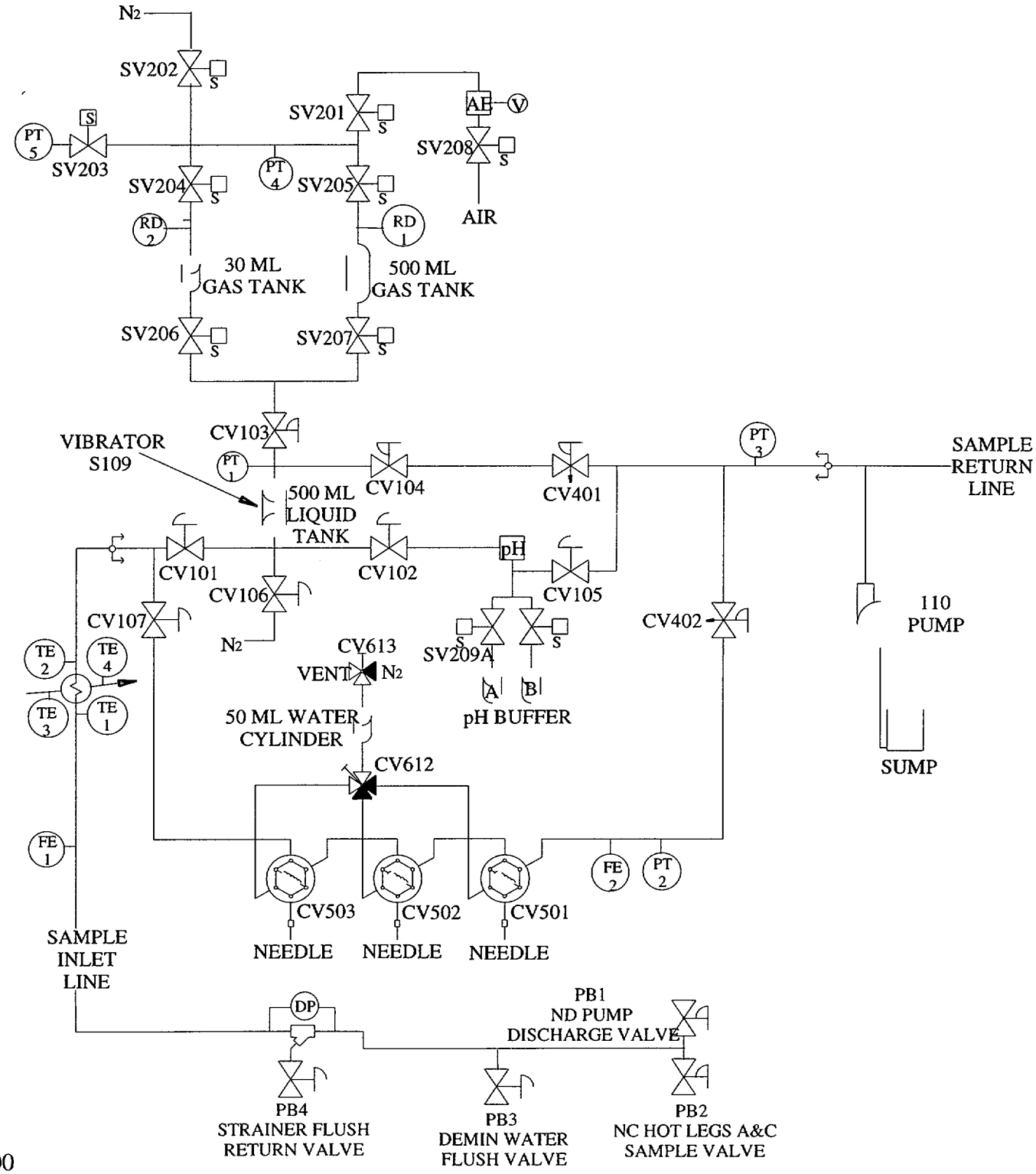

Continuous Use

Diagram of Sample Panel
Sample Panel
Sample Collection Shelf

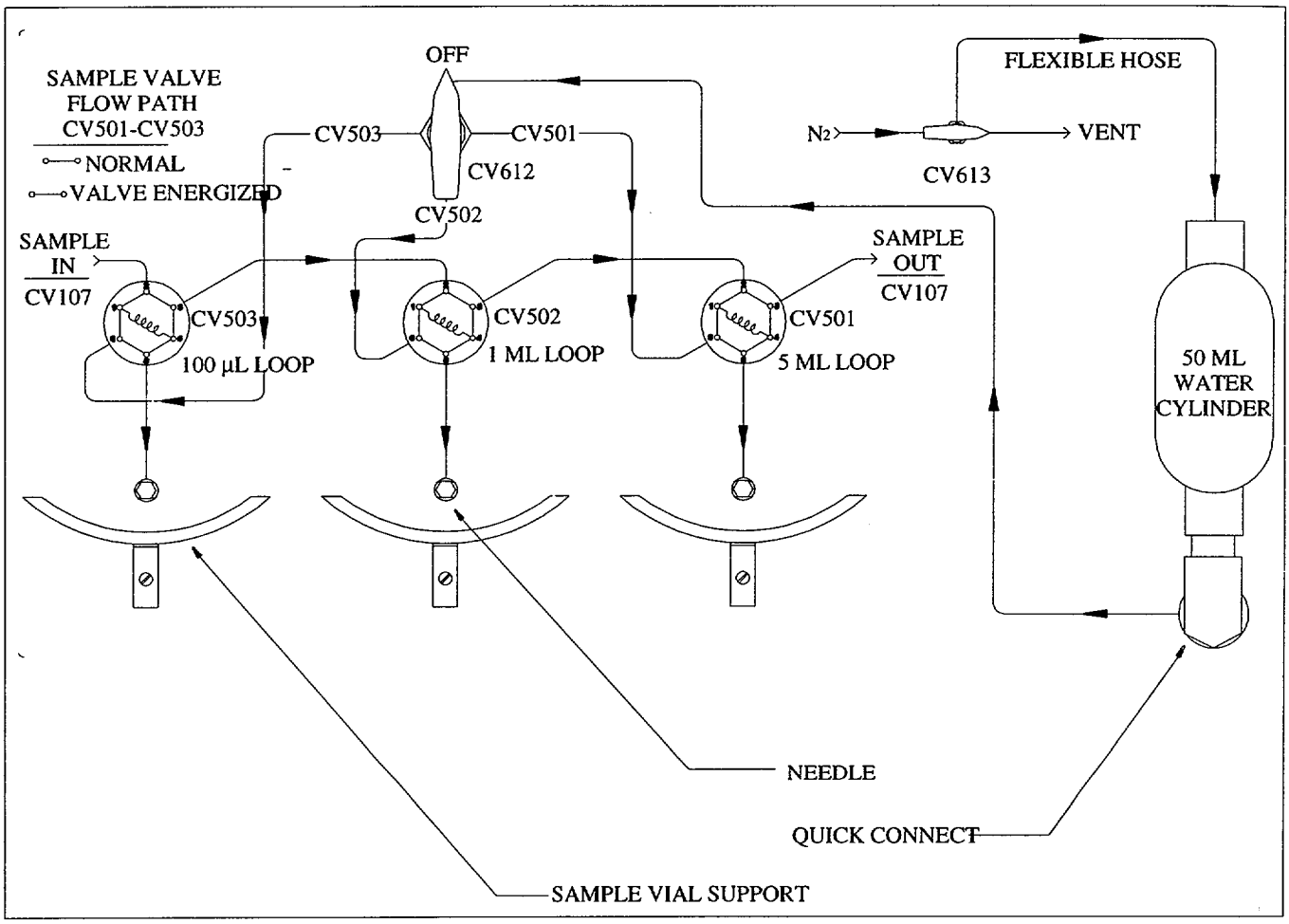

Continuous Use

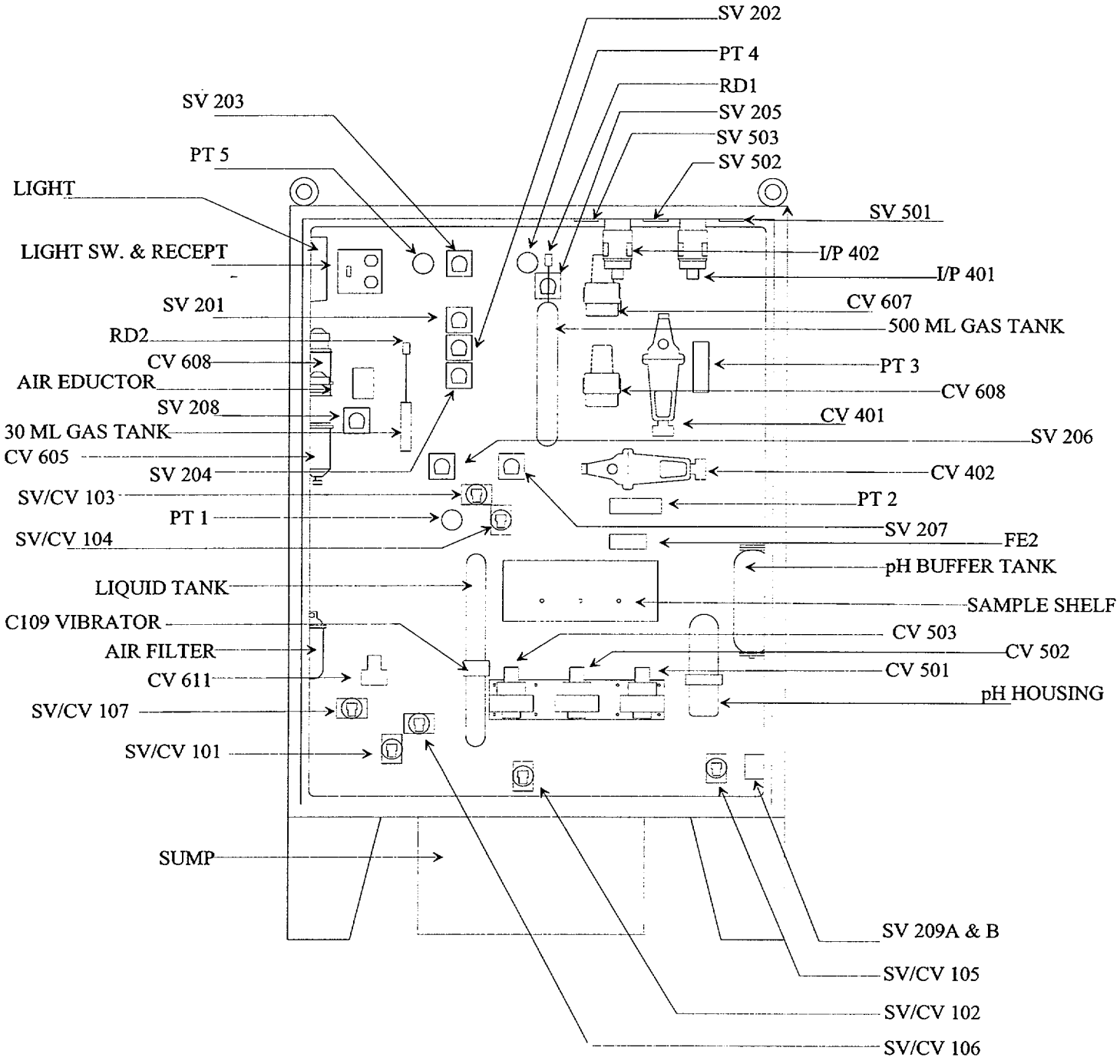

Continuous Use

POWER SUPPLIES

NOTE: The following four breakers are Chemistry controlled. {PIP #0-C98-4794}

UNIT 1

BREAKER	LOCATION	COMPONENTS AFFECTED
1KXPB #34	Elev. 554' Auxiliary Battery Room #350 Col. CC-56	PALSS Control Panel PALSS Panel YM Booster Pump
	The following valves fail closed: 1NM-294 (NC Hot Leg A/C Sample Isol) 1NM-295 (ND Sample Isol) 1NM-345 (PALSS YM Water Flush Inlet Isol) 1NM801 (Y-Strainer Flush Outlet Isol)	
1KXPB #36	Elev. 554 Auxiliary Battery Room #340 Column CC-56	PALSS Sample Panel Sump Pump

UNIT II

BREAKER	LOCATION	COMPONENTS AFFECTED
2KXPB #34	Elev. 554' Auxiliary Battery Room #340 Col. CC-57/58	PALSS Control Panel PALSS Panel YM Booster Pump
	The following valves fail closed: 2NM-294 (NC Hot Leg A/C Sample Isol) 2NM-295 (ND Sample Isol) 2NM-345 (PALSS YM Water Flush Inlet Isol) 2NM801 (Y-Strainer Flush Outlet Isol)	
2KXPB #36	Elev. 554 Auxiliary Battery Room #340 Column CC-57/58	PALSS Sample Panel Sump Pump

Continuous Use

CONTROL PANEL EQUIPMENT

NOTE:	The following information is common to both Unit Control Panels unless otherwise indicated.

ON/OFF SWITCHES

KS1: Controls all AC power to the system, including power to control circuits for external valves, through the master control relay K1.

SW1: Valve Power Switch Control all DC power to the system through the DC master control relay K2.

SW2: Lamp Test Switch. Energizes all the lamps in the various switches and indicates on the Control Panel.

111: This switch activates the YM booster pump. During an accident situation, the VCT pressure is expected to be elevated > 60 psig. **WHEN** aligned to the VCT, this switch activates the YM booster pump to increase YM flush water inlet pressure to ensure the PALSS sample panel can be adequately flushed. This switch may also be used to improve backflush of the Y-Strainer.

SELECTOR SWITCHES

SS1: Selects the thermocouple to be displayed on TG1.

TE1: Sample Inlet to Heat Exchanger
TE2: Sample Return from Heat Exchanger
TE3: Cooling Water Inlet to Heat Exchanger
TE4: Cooling Water Return from Heat Exchanger

SS2: Selects the RTD signal to be displayed on TG-2.

RD1: Temperature at the center of the 500 ml gas tank.
RD2: Temperature at the center of the 30 ml gas tank.

SS3: Selects the pressure signal to be displayed on PG-1.

PT1: Pressure entering 500 ml liquid tank.
PT2: Pressure in Rheodyne sample injection valve loop at the inlet (high) side of CV-402.

Continuous Use

PUSH BUTTON SWITCHES

PB-1: Operates the ND Sample Isolation Valve (1NM-295/2NM-295)
PB-2: Operates the NC Sample Isolation Valve (1NM-294/2NM-294)
PB-3: Operates the PALSS Demin (YM) Flush Water Inlet Isolation Valve (1NM-345/2NM-345)
PB-4: Operates the Y-Strainer Flush Outlet Isolation Valve (1NM-801/2NM-801)

RECEIVER GAUGES

TG1: Displays the inlet or outlet temperature, the cooling water (KC) or the sample line.

TG2: Displays the temperature of the gas in either the 30 ml gas tank or the 500 ml gas tank.

PG1: Displays the pressure in the liquid tank (PT1) or in the sample injection valve loops (PT2)
(0-3000 PSIG)

PG3: Displays the pressure in the sample return line (PT3)
(0-300 PSIG)

PG4: Displays the pressure in the gas tanks (PT4)
(0-200 PSIA)

PG5: Displays the pressure read by the low range pressure transmitter (PT5). This transmitter can also read the pressure in the gas tanks.
(0-30 PSIA)

FG1: Displays the flowrate (FE1) of the liquid in the sample line.
(0-5 gpm)

FG2: Displays the flowrate (FE2) in the sample injection valve loop (3 to 303 ml/min). This gauge indication is located on the lower front of the control panel.

INDICATORS

LT1: Indicates a high level in the sample panel sump.
LT2: Indicates that the sample panel sump has begun to fill. (Low Level)
LT3: Indicates the Y-Strainer is clogged (high DP).
LT209A: Indicates pH buffer tank "A" has been selected for pH probe (calibration/pressurization).
LT209B: Indicates pH buffer tank "B" has been selected for pH probe (calibration/Pressurization).

Continuous Use

FUSES

F1: Protects the AC circuits. Located inside the control panel at TB 1-1.
F2: Protects the DC circuits. Located inside the control panel at TB 2-1.
pH: Protects the pH Analyzer. Located inside the pH Analyzer.

pH ANALYZER

P1: Used to monitor the pH and temperature of the sample. Located low front of control panel.

DC POWER SUPPLY

The DC power supply is mounted on a panel internal to the control panel. It can be accessed from the back of the control panel. It provides 24 VDC power to the lamps and relays. It also supplies the current source for I/P 401 and I/P 402.

SAMPLE PANEL INTERNAL COMPONENTS MANUAL VALVES

CV601: Needle valve used to control the flowrate of nitrogen for nitrogen stripping into the liquid tank.
CV603: Ball valve used to isolate the nitrogen source used for nitrogen stripping from the bottom of the liquid tank.
CV604: Ball valve used to isolate the nitrogen purge gas source from the gas tanks.
CV606: Ball valve used to isolate the air supply (VI) coming into the sample panel.
CV609: Three way ball valve allows either nitrogen or instrument air (VI) to operate CV101 through CV107.
CV610: Three way ball valve allows either nitrogen or instrument air (VI) to be used as the purge gas.
CV612: Five way ball valve on the sample shelf used to select sample loops during liquid sample collection.
CV613: Three way ball valve on the sample shelf used to vent or pressurize the 50 ml water cylinder.

Continuous Use

VALVES EXTERNAL TO THE PALSS CONTROL/SAMPLE PANEL

UNIT 1

VALVE	LOCATION	COMPONENTS AFFECTED
1NM-393 (LO)	El. 543, Rm 238, Col. EE-FF, 53-54 Left of Sample Column	PALSS return to WEFT Sump A, Isolation Valve {PIP #C98-2886)
1NM-492 (LC)	El. 543, Rm 238, Col FF 53-54	PALSS return to U1 VCT Isolation Valve
1YM-436	El. 543, Rm 238 Col. FF-54 In Room with Sample Panel	YM Header to PALSS Isolation Valve
1NM-805	El. 543, Rm 238 Col. EE-FF 53-54 Left of Sample Panel	PALSS Inlet Sample/Flush Isolation Valve
1NM-806	El. 543, Rm 238 Col. EE-FF 53-54 Left of Sample Panel	PALSS Inlet (Test)Vent Valve
Nitrogen Bottle	El. 543, Rm 238 Col. EE- Right of Control Panel	Supplies N_2 to OPEN: 1NM-294, 1NM-295 and 1NM-345
1VI3373	El. 543, Rm 238, Col. EE-54, 10 ft. up	This valve supplies instrument air to the PALSS sample panel. This valve supplies air to operate CV401 and CV402.
1VI3378	El. 543, Rm 238, Col FF-54, 10 ft. up	This valve supplies instrument air to OPEN: 1NM-801
2NM-393 (LO)	El. 543, Rm 248, Col EE-FF, 60-61 Lower Left of Sample Panel	PALSS return to WEFT Sump B Isolation Valve {PIP #0-C98-2886}

Continuous Use

VALVE	LOCATION	COMPONENTS AFFECTED
2NM-492 (LC)	El. 543, Rm, 248, Col EE-FF, 60-61 Right of Sample Panel, ~ 7 ft. up	PALSS return to U-2 VCT, Isolation Valve
1YM-437	El. 543, Rm. 248 Col. EE-FF, 60-61 Right of Sample Panel, 6 ft. up	YM Header to PALSS Isol Valve
2NM-805	El. 543, Rm. 248 Col. EE-FF, 60 Left of Sample Panel, 7 ft. up	PALSS Inlet Sample/Flush Isolation Valve
2NM-806	El. 543, Rm. 248 Col. EE-FF, 60 Left of Sample Panel, 7 ft. up	PALSS Inlet (Test) Vent Valve
Nitrogen Bottle Valve	El. 543, Rm 248 Col. FF, 59 Left of Control Panel	Supplies N_2 to PALSS Sample N_2 to OPEN:2NM-294, 2NM-295 and 2NM-801
2VIY073	El. 543, Rm. 248 Col. EE, 60 Entering NM Hx Area, 10 ft up	This valve supplies Instrument Air to OPEN: Col FF-60 2NM-801
2VI402	El. 543, Rm 248 Col, EE, 60 Above PALSS Sample Panel, 8 ft. up	This valve supplies Inst. Air to PALSS Sample Panel, this valve supplies air to operate CV-401 = CV-402

(R06-97)

Duke Power Company
PROCEDURE PROCESS RECORD
FOR STANDARD PROCEDURES

(1) ID No. SR/0/B/2000/001
Revision No. 002

PREPARATION

(2) Procedure Title: **Standard Procedure for Public Affairs Response to the Emergency Operations Facility**

(3) Prepared By Ina Worley Date 3-1-00

(4)	Applicable To:	☒ ONS	☒ MNS	☒ CNS
(5)	Technical Advisor			
(6)	Requires 10CFR50.59 Evaluation?	☒ Yes ☐ No	☒ Yes ☐ No	☒ Yes ☐ No
		YES = New procedure or revision with major changes at applicable site		NO = Revision with minor changes NO = To incorporate previously approved changes
(7)	Review (QR)	By M.R. Thorne Date 3-22-	By [illegible] Date 3/8/2000	By [illegible] Date 3-1-00
	Cross-Disciplinary Review (QR)	By NA MOT Date 3-22-2000	By NA JM Date 3/8/2000	By NA GLM Date 3-1-00
	Reactivity Mgmt. Review (QR)	By NA MOT Date 3-22-2000	By NA JM Date 3/8/2000	By NA GLM Date 3-1-00
(8)	Additional Reviews	By Date By Date	By Date By Date	By Date By Date
(9)	Approved	By [illegible] Date 3/23/00	By B.J. Dolan by [illegible] Date 3/8/00	By Richard L. Sweigard Date 3-1-00
(10)	Use Level	**Multiple Use**		

PERFORMANCE (Compare with Control Copy every 14 calendar days while work is being performed.)

(11) Compared with Control Copy _____ Date _____

Compared with Control Copy _____ Date _____

Compared with Control Copy _____ Date _____

(12) Date(s) Performed _____

Work Order Number (WO#) _____

COMPLETION

(13) Procedure Completion Verification

☐ Yes ☐ NA Check lists and/or blanks initialed, signed, dated, or filled in NA, as appropriate?

☐ Yes ☐ NA Listed enclosures attached?

☐ Yes ☐ NA Data sheets attached, completed, dated, and signed?

☐ Yes ☐ NA Charts, graphs, etc. attached, dated, identified, and marked?

☐ Yes ☐ NA Procedure requirements met?

Verified By _____ Date _____

(14) Procedure Completion Approved _____ Date _____

(15) Remarks (*Attach additional pages, if necessary.*)

DUKE ENERGY CORPORATION
STANDARD PROCEDURE FOR
PUBLIC AFFAIRS RESPONSE TO THE
EMERGENCY OPERATIONS FACILITY

1.0 SYMPTOMS

Conditions exist such that the public affairs emergency response organization has been activated.

2.0 IMMEDIATE ACTIONS

2.1 EOF news manager position will be staffed as quickly as possible after the activation of the EOF.

2.2 EOF public spokesperson position will be staffed as quickly as possible after the activation of the EOF.

2.3 EOF technical liaison position will be staffed as quickly as possible after the activation of the EOF.

2.4 Public information coordinator position will be staffed as quickly as possible after the activation of the EOF.

3.0 SUBSEQUENT ACTIONS

3.1 Respond as required by enclosures designated for the individual position.

4.0 ENCLOSURES

4.1 EOF News Manager
4.2 EOF Public Spokesperson
4.3 Public Information Coordinator
4.4 EOF Technical Liaison

ENCLOSURE 4.1
EOF NEWS MANAGER
ACTIVATION CHECKLIST
(Nuclear only)

Initials

_____ Sign in on the public affairs EOF staffing board.

_____ Put on position badge (located in top drawer of public affairs' file cabinet).

_____ Discuss the development of data information with the EOF technical liaison.

_____ Prepare the public spokesperson for news conference by:
- Reviewing the news conference form (located in public affairs' file cabinet)
- Verifying data information forms have been provided by EOF technical liaison
- Providing copies of all news releases

_____ (McGuire & Catawba only) Contact media coordinator to determine:
- Time for pre-news conference briefing with state/county/federal PIOs
- Time for news conference
- Visual aids needed for news conference

_____ (Oconee only) Contact government agency liaison in the Oconee joint information center to:
- Determine a time for pre-news conference briefing with state/county/federal PIOs
- Determine a time for news conference
- Determine visual aids needed for news conference
- Assign media liaison stationed in the Oconee media center to the JIC conference bridge to keep up with plant status and emergency classification
- Verify phone is available for the media liaison

_____ (Oconee only) Request media center assistant to announce to the media the time for the next news conference.

___ Complete the news conference agenda form (located in the public affairs' file cabinet) during the pre-news conference.

CAUTION:	Stop the news conference if a change in emergency classification occurs while the conference is being held. Words to use are shown on the agenda form.

ENCLOSURE 4.1
EOF NEWS MANAGER
ACTIVATION CHECKLIST (continued)
(Nuclear only)

Initials

_____ Contact the NRC representatives in the EOF to keep them up to date on communication activities.

_____ Document all decision making, phone calls and key contacts using ERO Facility Log sheets (CNS/MNS) or a notepad (located in public affairs' file cabinet).

_____ Verify all checklists and information sheets have been properly completed/signed and give completed paperwork to the public affairs emergency planner.

ENCLOSURE 4.2
EOF PUBLIC SPOKESPERSON ACTIVATION CHECKLIST
(Nuclear only)

Initials

_____ Sign in on public affairs EOF staffing board.

_____ Put on position badge (located in top drawer of public affairs' file cabinet).

_____ Contact EOF news manager.

_____ Contact EOF technical liaison.

_____ Contact public information coordinator.

_____ Review data sheets and information appropriate to the event.

NOTE:	The EOF technical liaison maintains data sheets and a chronological list of events.

_____ Obtain a chronology of events to have ready for news conference.

_____ Request the EOF technical liaison make you aware of any significant change in plant status.

_____ Review and approve news releases when they are ready for release.

_____ Review <u>all</u> news releases prior to news conference.

_____ Review current copies of data sheets prior to news conference.

_____ Keep in contact with the public spokesperson located at the visitor's center (if applicable) to keep abreast of information being provided to the media from the plant site.

_____ Review all documented escalated rumor information about plant status and/or misinformation revealed by media queries.

_____ Request EOF news manager arrange for visual aids that will be needed (if appropriate) for press conference.

NOTE:	<u>Do not speculate during the news conference.</u> Information should relate to plant status and plant recovery. Do not discuss public protective actions and state/county response.

ENCLOSURE 4.2
EOF PUBLIC SPOKESPERSON
ACTIVATION CHECKLIST (continued)
(Nuclear only)

Initials

CAUTION:	Do not make reference to projected dose during a news conference. Any reference to dose should be based on actual dose at the site boundary.

_____ Provide brief update to state/county PIO representatives prior to each news conference at the pre-news conference briefing.

_____ Communicate with Duke Energy board of directors when directed.

_____ Communicate with the governors of North Carolina and/or South Carolina when directed.

_____ Document decision-making, phone calls and key contacts using ERO Facility Log sheets (CNS/MNS) or a notepad (located in public affairs' file cabinet).

_____ Verify all checklists and information sheets have been properly completed/signed and give completed paperwork to the public affairs emergency planner.

ENCLOSURE 4.3
PUBLIC INFORMATION COORDINATOR ACTIVATION CHECKLIST

Initials

_____ Sign in on public affairs EOF staffing board.

_____ Put on position badge (located in top drawer of public affairs' file cabinet).

_____ (Nuclear only) Secure copies of the emergency notification form (ENF) that have been sent to the state/county agencies from the offsite agency communicator in the EOF.

_____ Log on the public affairs EOF workstation using your LAN ID and password.

NOTE:	Directions for accessing JIC drive are in the Joint Information Center (JIC) Reference Manual, located in the public affair's file cabinet.

_____ Access the JIC drive and print the initial news release that was prepared by the media relations duty person for this event.

_____ Copy and distribute all news releases within the EOF. Ensure a copy is put in the Master EOF folder (Oconee only: Ensure releases distributed to Charlotte and ONS JIC also)

_____ (Nuclear only) Develop news releases appropriate to the event by working with the EOF news manager, EOF technical liaison and EOF public spokesperson. News releases should address, as appropriate:

- Changes in event classification
- Current plant conditions
- Radiological releases
- Visible or audible events such as fires and noises
- Employee information such as injuries, personnel accountability, and site evacuation
- Any offsite response such as fire truck or ambulance
- Dispatch of field monitoring teams
- Rumors (dispel)
- Nuclear insurance (if the public has been evacuated)

ENCLOSURE 4.3
PUBLIC INFORMATION COORDINATOR
ACTIVATION CHECKLIST (continued)

Initials

_____ (Storms only) Develop news releases and messages appropriate to the event by working with the EOF technical liaison, the media coordinator, and the customer service center (CSC) liaison. News releases should address, as appropriate:
- Current system conditions
- Outage updates
- Schedule of planned restoration
- Use of outside utilities
- State/county resources being utilized
- Rumors (dispel)
- Employee information (such as injuries)
- Localized information

_____ Utilize verification and validation techniques by having the EOF technical liaison verify and approve technical information provided in news releases.

_____ Provide copy of news release to EOF public spokesperson (or EOF director, if spokesperson not available) for review and approval prior to releasing to JIC for distribution by PR NewsWire.

_____ Document all decision-making, telephone calls and key using ERO Facility Log sheets (CNS/MNS) or a notepad (located in public affairs' file cabinet).

_____ (Storms only) Obtain storm data information from the EOF technical liaison and send this information to the CSC and JIC every three hours (coincide with news release schedule).

_____ (Storms only) Assist the EOF technical liaison, as needed, in coordinating and disseminating information.

_____ Provide copy of all news releases prepared in the EOF to the public affairs emergency planner.

CAUTION: Assure that a copy of each news release is available prior to deleting files.

_____ (Nuclear only) Delete all news releases developed as a result of the EOF activation from the JIC drive after the event is terminated.

_____ Verify all checklists and information sheets have been properly completed/signed and give completed paperwork to the public affairs emergency planning consultant.

ENCLOSURE 4.4
EOF TECHNICAL LIAISON
ACTIVATION CHECKLIST

Initials

_____ Sign in on public affairs EOF staffing board

_____ Put on position badge (located in top drawer of public affairs' file cabinet).

NOTE:	Instructions for using the wireless phones/headsets are located on top of the public affairs file cabinet. Directions for accessing JIC drive are in the Joint Information Center (JIC) Reference Manual, located in the public affair's file cabinet. When using the JIC bridge line, observe the following protocol: - identify yourself and your location - take turns speaking - do not interrupt - acknowledge receipt of information - repeat back to ensure important/sensitive information is received/understood - re-direct long discussions to a phone line - do not push the "Hold" button on your phone, this will lock the system to those currently on line.

_____ Using the wireless headset/mobile phone, access the JIC conference bridge.

_____ Gather technical information on plant/event conditions and enter this information on the appropriate blank data sheets (nuclear) or on a log sheet/notepad (storms).

_____ (Nuclear only) Help EOF news manager, public information coordinator, and public spokesperson understand the information on the data information forms.

_____ (Nuclear only) Fax completed data sheets to the Charlotte JIC.

_____ (Nuclear only) Provide the completed data sheets/information to the public spokesperson.

_____ Maintain a chronological listing of significant events using ERO Facility Log sheets (CNS/MNS) or a notepad (located in public affairs' file cabinet).

_____ Update regional communications coordinator as conditions change, particularly concerning emergency classifications or ESR/ETOR status.

_____ (Nuclear only - Catawba and McGuire) Request copies of the electronic status board information from the OSC, TSC and EOF from the EOF log keeper if a need exists.

ENCLOSURE 4.4
EOF TECHNICAL LIAISON
ACTIVATION CHECKLIST (continued)

Initials

_____ (Nuclear only) Request assistance from EOF rad assessment manager in obtaining Raddose V page 2 information.

_____ (Nuclear only) Utilize dose comparison tip sheet and information from Raddose V to develop dose comparisons for news releases.

CAUTION:	Discussions relating to dose are always based on actual dose at the site boundary only. Do not use projected dose information at any time. (Nuclear only)

_____ (Nuclear only) Provide dose comparison information to public information coordinator for use in news releases.

_____ (Nuclear only) Continue to monitor and update information relative to radiological releases.

_____ (Storms only) Assist in the coordination of crews and locations for news conferences, and media briefings, in conjunction with the media coordinator and region communicators.

_____ Assist regional communications coordinator and state/county EOC liaisons by tracking down information to dispel rumors.

_____ Verify the public spokesperson is aware of any significant changes (such as changes in emergency classifications (nuclear) or changes in ESR/ETORs (storms)).

_____ Provide feedback/information to the JIC concerning community issues /concerns.

_____ Verify all checklists and information sheets have been properly completed/signed and give completed paperwork to the public affairs emergency planner.