POWERING PROGRESS THROUGH
SCIENCE AND TECHNOLOGY

EPRI

BWRVIP BWR Vessel & Internals Project 2000-100

April 3, 2000

Document Control Desk
U. S. Nuclear Regulatory Commission
11555 Rockville Pike
Rockville, MD 20852

Attention: C. E. Carpenter

Subject: Project 704 - Transmittal of "BWR Vessel and Internals Project, Top Guide/Core Plate Repair Design Criteria (BWRVIP-50NP)," EPRI Report TR-108722NP, March 2000.

Reference: Letter from C. Terry to C. E. Carpenter, May 14, 1998: Transmittal of "BWR Vessel and Internals Project, Top Guide/Core Plate Repair Design Criteria (BWRVIP-50)," EPRI Report TR-108722, May 1998.

Enclosed are two (2) copies of the subject report. This is the non-proprietary version of the document submitted to the NRC by the letter referenced above.

If you have any questions on this subject please call Steve Lewis of Entergy, BWRVIP Assessment Committee Chairman, at (601) 368-5444.

Sincerely,

Carl Terry
Niagara Mohawk Power Company
Chairman, BWR Vessel and Internals Project

Enclosure

CORPORATE HEADQUARTERS
3412 Hillview Avenue | Palo Alto CA 94304-1395 USA | 650.855.2000 | Customer Service 800.313.3774 | www.epri.com

D058

EPRI

BWR Vessel and Internals Project Top Guide/Core Plate Repair Design Criteria (BWRVIP-50NP)

NON-PROPRIETARY INFORMATION

NOTICE: This report contains the non-proprietary information that is included in the proprietary version of this report. The proprietary version of this report contains proprietary information that is the intellectual property of BWRVIP utility members and EPRI. Accordingly, the proprietary report is available only under license from EPRI and may not be reproduced or disclosed, wholly or in part, by any Licensee to any other person or organization.

REPORT SUMMARY

The Boiling Water Reactor Vessel and Internals Project (BWRVIP), formed in June, 1994, is an association of utilities focused exclusively on BWR vessel and internals issues. This BWRVIP report documents criteria which can be used to design a repair for the top guide or core plate in a BWR.

Background

In the event that significant degradation is observed in BWR top guide or core plate components, repair to those commponents may be required. Utilities need criteria which can be used in the development of those repair designs.

Objectives

To compile the appropriate design criteria for top guide and core plate repairs into a document which can be used by utility personnel performing the design and which could be submitted to appropriate regulatory agencies for approval of the generic design process.

Approach

The contractor assembled a draft document which discussed all elements which need to be considered in designing top guide or core plate repair. Items discussed include: design objectives; structural evaluation; system evaluation; materials, fabrication and installation considerations; and, required inspection and testing. The resulting draft was reviewed in depth by BWRVIP utility representatives as well as third party contractors. The final report incorporates comments received during those reviews.

Results

The document provides general design acceptance criteria for the repair of top guides and core plates. Repairs designed to meet these criteria will maintain the structural integrity of the components under normal operation as well as under postulated transient and design basis accident conditions. The document also includes criteria for the design of wedges which can be installed to provide additional resistance to lateral movement of the top guide or core plate.

EPRI Perspective

The criteria listed in the report define a standard set of considerations which are important in designing a top guide or core plate repair. It is intended that these criteria will be submitted to the USNRC, and possibily non-US regulators, for their approval. Regulatory acceptance of these generic criteria will significantly reduce the utility effort required to obtain approval for plant-specific repairs.

TR-108722NP

Keywords
Boiling water reactor
Repair
Stress corrosion cracking
Vessel and internals
Core plate
Top guide

BWR Vessel and Internals Project

Top Guide/Core Plate Repair Design Criteria (BWRVIP-50NP)

TR-108722NP
Research Project B501

Final Report, March 2000

Prepared by:

MPR Associates

BWRVIP Repair Committee

Prepared for

BOILING WATER REACTOR VESSEL & INTERNALS PROJECT and

EPRI

3412 Hillview Ave.

Palo Alto, California 94304

DISCLAIMER OF WARRANTIES AND LIMITATION OF LIABILITIES

This report was prepared by the organization(s) named below as an account of work sponsored or cosponsored by the BWR Vessel and Internals Project (BWRVIP) and the Electric Power Research Institute, Inc. (EPRI). Neither BWRVIP, EPRI, any member of EPRI, any cosponsor, the organization(s) named below, nor any person acting on behalf of any of them:

(a) makes any warranty or representation whatsoever, express or implied, (i) with respect to the use of any information, apparatus, method, process or similar item disclosed in this report, including mechantability and fitness for a particular purpose, or (ii) that such use does not infringe on or interfere with privately owned rights, including any party's intellectual property, or (iii) that this report is suitable to any particular user's circumstance, or

(b) assumes any responsibility for any damages or other liability whatsoever (including any consequential damages, even if BWRVIP, EPRI or any EPRI representative has been advised of the possibility of such damages) resulting from your selection or use of this report or any information, apparatus, method, process or similar item disclosed in this report.

Organization(s) that prepared this report:

MPR Associates

BWRVIP Repair Committee

ORDERING INFORMATION

Requests for copies of this report should be directed to the BWRVIP Program Manager, 3412 Ave., Palo Alto, Ca. 94304, (650) 855-2340.

ACKNOWLEDGEMENTS

The members of the BWRVIP Top Guide/Core Plate Repair Team, listed below, are gratefully acknowledged for their efforts which led to the successful completion of this project.

Julian Ambromovici	GPU Nuclear
Priit Okas	NYPA
Charles Martin	BECo
Ed hartwig	TVA
Bruce McLeod	Southern Nuclear
Ken Wolfe	EPRI

MPR Principal Investigator:

H. William McCurdy

Table of Contents

1.0 INTRODUCTION 1-1

1.1 Background 1-1

1.2 Purpose 1-1

1.3 Scope 1-1

2.0 DEFINITIONS 2-1

3.0 TOP GUIDE/CORE PLATE CHARACTERISTICS AND SAFETY FUNCTIONS 3-1

3.1 Generic Physical Description 3-1

3.2 Safety Related Functions of Analyzed Components 3-2

3.3 Event Analyses 3-3

4.0 SCOPE OF REPAIR 4-1

5.0 DESIGN OBJECTIVES 5-1

5.1 Repair Design Life 5-1

5.2 Safety Design Bases 5-1

5.3 Safety Analysis Events 5-1

5.4 Structural Integrity 5-1

5.5 Loose Parts Considerations 5-1

5.6 Physical Interfaces With Other Reactor Internals 5-1

5.7 Installation 5-1

5.8 Load Path Alterations 5-2

5.9 Existing Structures 5-2

6.0 CODES AND STANDARDS 6-1

Table of Contents (continued)

7.0 STRUCTURAL AND DESIGN EVALUATION 7-1

7.1 Load Definitions - Applied Loads 7-1

7.2 Service Level Conditions 7-4

7.3 Load Combinations 7-5

7.4 Functional Evaluation Criteria 7-6

7.5 Allowable Stresses 7-6

7.6 Consideration of Shroud Repair or Cracking 7-7

7.7 Repair Impact on Existing Internal Components 7-7

7.8 Radiation Effects on Repair Design 7-7

7.9 Analysis Codes 7-7

7.10 Thermal Cycles 7-7

7.11 Corrosion Allowance 7-8

8.0 SYSTEM EVALUATION 8-1

8.1 Reactor Coolant Flow Distribution and Pressure Drop 8-1

8.2 Emergency Operating Procedure (EOP) Calculations 8-1

8.3 Power Uprate 8-1

9.0 MATERIALS, FABRICATION AND INSTALLATION 9-1

9.1 Materials 9-1

9.2 Crevices 9-2

9.3 Fabrication 9-2

9.4 Pre-Installation As-Built Inspection 9-3

9.5 Installation Cleanliness 9-3

9.6 ALARA 9-4

9.7 Qualification of Critical Design Parameters 9-4

10.0 INSPECTION AND TESTING 10-1

10.1 Inspection Access 10-1

10.2 Pre and Post Installation Inspection 10-1

Table of Contents (continued)

11.0 QUALITY ASSURANCE PROGRAM **11-1**

12.0 DOCUMENTATION **12-1**

13.0 REFERENCES **13-1**

APPENDIX A Specific Design Criteria and Requirements for Wedge-Type Repairs for Top Guide and Core Plate **A-1**

A.1 Degradation to be Addressed by Repairs A-1

A.2 Design Criteria A-2

A.3 Structural Analyses A-2

A.4 Design-Reliant Structures and Welds A-2

A.5 Wedge-Type Repair Assembly Locations A-3

A.6 Effects on Fuel, Other Internals and Refueling A-3

A.7 References A-4

LIST OF FIGURES

Figure

3-1 BWR/2-5 Top Guide Assembly 3-4

3-2 BWR/6 Top Guide Assembly 3-5

3-3 BWR/2- 5 Core Plate Assembly 3-6

A-1 Wedge Repair Arrangement - Top Guide A-5

A-2 Wedge Repair Arrangement - Core Plate A-6

LIST OF TABLES

Table

7-1 Load Combinations for Mark I Plants 7-9

7-2 Load Combinations for Mark II and Mark III Plants 7-10

7-3 Load Term Definitions for Tables 7-1 and 7-2 7-11

EXECUTIVE SUMMARY

The Boiling Water Reactor Vessel and Internals Project (BWRVIP) was formed in June 1994 as a Utility-directed initiative to address BWR vessel and internals issues. The Repair Technical Subcommittee of the BWRVIP developed this repair criteria document.

This document provides the general design acceptance criteria for permanent or temporary repair of the top guide or core plate. It is provided to assist BWR owners in designing repairs which maintain the structural integrity and system functionality of the top guide or core plate during normal operation, and under postulated transient and design basis accident conditions, for the remaining plant life or other service life as specified by the plant owner.

Issuance of this document is not intended to imply that repair of the top guide or core plate is the only viable method for resolving cracking in these components. Due to variations in the material, fabrication, environment and as-found condition of individual components, and depending upon which component is degraded, repair is only one of several options that are available. The action to be taken for individual plants will be determined by the plant licensee.

1.0 INTRODUCTION

1.1 Background

BWR plants routinely perform inspections of the top guide and core plate structures. These examinations have been performed under an ASME Section XI program, in accordance with recommendations in General Electric Service Information Letters (SILs) and in response to the recommendations in the Inspection and Flaw Evaluation Guidelines ([6] [7]) developed by the BWR Vessel and Internals Project (BWRVIP). In the course of these inspections, a few plants have found cracking to various degrees.

1.2 Purpose

The purpose of this BWRVIP document is to provide general design criteria for repairs to the top guide and core plate structures in BWR plants. These criteria are applicable for any type of repair to the structures either to address specific degradation found during inspections or on a preemptive basis. In addition, Appendix A to this document provides additional design criteria for a specific repair which adds wedge-type structures in the annular space between the top guide or core plate and the core shroud (see Figures A-1 and A-2).

1.3 *Scope*

This repair design criteria document is applicable to all General Electric BWR/2 through BWR/6 plants which plan to implement repairs to their top guide or core plate structures.

2.0 DEFINITIONS

Repair	Repair as used in this document consists of actions taken to design, analyze, fabricate and install hardware which restores the structural and functional integrity of the degraded portions of the top guide or core plate.
Top Guide	Top guide is the grid (BWR/2 through BWR/5) or perforated plate (BWR/6) structure which maintains alignment and provides lateral support for the fuel assemblies at their top end.
Core Plate	Core plate is the perforated plate structure (reinforced with stiffener beams and stabilizers) which provides alignment and lateral support for the fuel assemblies (at their bottom end), the control rod guide tubes and the in-core instrumentation.
SAR	SAR is the current plant's Safety Analysis Report.

3.0 TOP GUIDE/CORE PLATE CHARACTERISTICS AND SAFETY FUNCTIONS

3.1 Generic Physical Description

3.1.1 Top Guide

The top guide for BWR/2 through BWR/5 plants (Figure 3-1) consists of a grid of beams forming square holes. The grid beams attach to a rim on the periphery of the top guide by means of, in most cases, reinforcement blocks and pins which attach to the cover plate and bottom plate. The cover plate is attached to the rim with numerous pins or bolts, and the bottom plate is attached in most cases to the rim with a weld. In some plant-specific designs, there is no cover plate, and the cross beams are welded directly to the rim. In a few cases, the bottom plate and rim are an integrally machined piece. The rim, cover plate and bottom plate are fabricated from stainless steel plate material. The BWR/2 through BWR/5 top guides are positioned by four vertical or horizontal aligner pins. Bosses or sockets are welded to both the top guide and the shroud to engage the aligner pins. In addition, the later plants in this group have wedges at the periphery of the top guide, which provide lateral support. (Note that certain of the structural features described above are not depicted in Figure 3-1. For the detailed features, refer to the plant-specific fabrication drawings.)

The top guide for BWR/6 plants (Figure 3-2) consists of a solid stainless steel plate which has square holes for each fuel cell machined out, and is bolted in place along with the upper shroud; therefore, the discussion of rim geometry, aligner pins, wedges, and the beam grid is not applicable to BWR/6 plants. All top guides for BWR/6 plants were built to ASME Section NG and were code stamped.

3.1.2 Core Plate

The core plate assembly for BWR/2 through BWR/5 plants (Figure 3-3) consists of a perforated stainless steel plate reinforced by stiffener beams and supported on the perimeter by a circular rim. The core plate rim is bolted to a ledge on the core shroud by bolts which prevent vertical movement. The bolt preload on the core plate bolts also provides the lateral restraint to prevent core plate movement.

Stiffener beams are welded to the core plate to carry the pressure loads for normal operation and design basis LOCA events. Because peak pressure loads place the lower edges of the beams in compression, cross ties between the beams are required for stabilization. The stabilizer beams or rods prevent flange buckling by providing lateral support. These beams or rods also provide lateral support for in-core housing monitors.

The early BWR core plates do not have continuous fillet welds along the entire length between the top plate and the stiffener beam attachments. For these plants, no welds are present at the core plate holes.

The core plate for BWR/6 plants generally has the same configuration as the BWR/2 through BWR/5 plants, but has the following differences which are unique to these plants:

- Stabilizer beams are used instead of stabilizer rods, i.e., beams are present in both lateral directions.
- Wedges are provided which give lateral support.

All core plate assemblies for BWR/6 plants were built to ASME Section NG and were code stamped.

3.2 Safety Related Functions of Analyzed Components

The safety design bases are identified in the following:

3.2.1 Top Guide

The top guide is designed to provide the following safety-related functions:

Content Deleted -
EPRI Proprietary Information

3.2.2 Core Plate

The core plate is designed to provide the following safety-related functions:

Content Deleted -
EPRI Proprietary Information

3.3 Event Analyses

As previously stated, the purpose of this document is to provide general design criteria for repairs to the top guide and core plate. Accordingly, various events and operational conditions need to be considered to ensure that the repair does not inhibit the abilities of the top guide and core plate to perform their safety functions. The following general load cases shall be considered in design of the proposed repair. Note that the load cases shall be combined in accordance with the specific plant SAR requirements.

3.3.1 Normal Operation

Content Deleted -
EPRI Proprietary Information

3.3.2 Anticipated Operational Occurrences (Upset Conditions)

Content Deleted -
EPRI Proprietary Information

3.3.3 Design Basis Accidents (Emergency/Faulted Conditions)

Content Deleted -
EPRI Proprietary Information

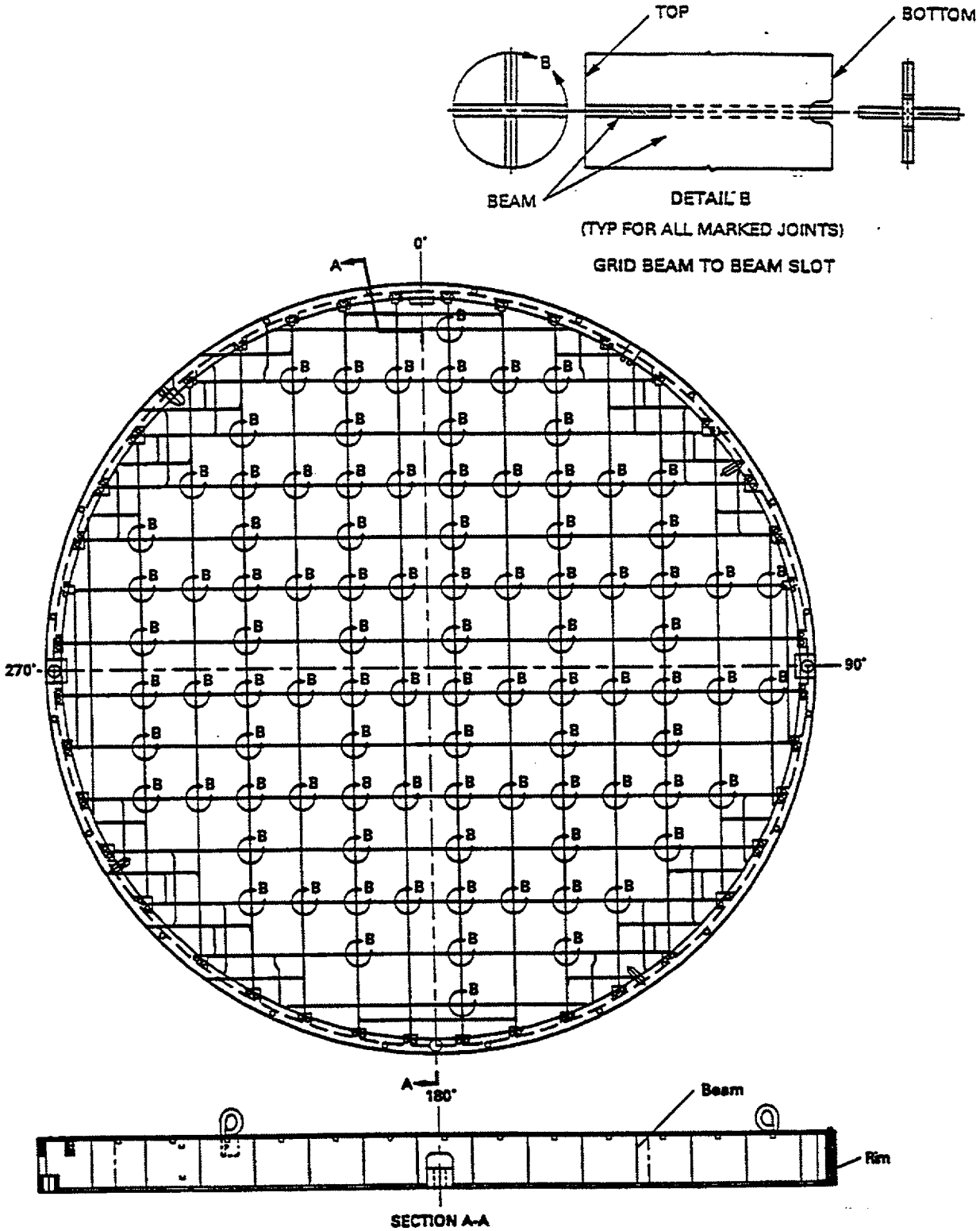

Figure 3-1. BWR/2-5 Top Guide Assembly

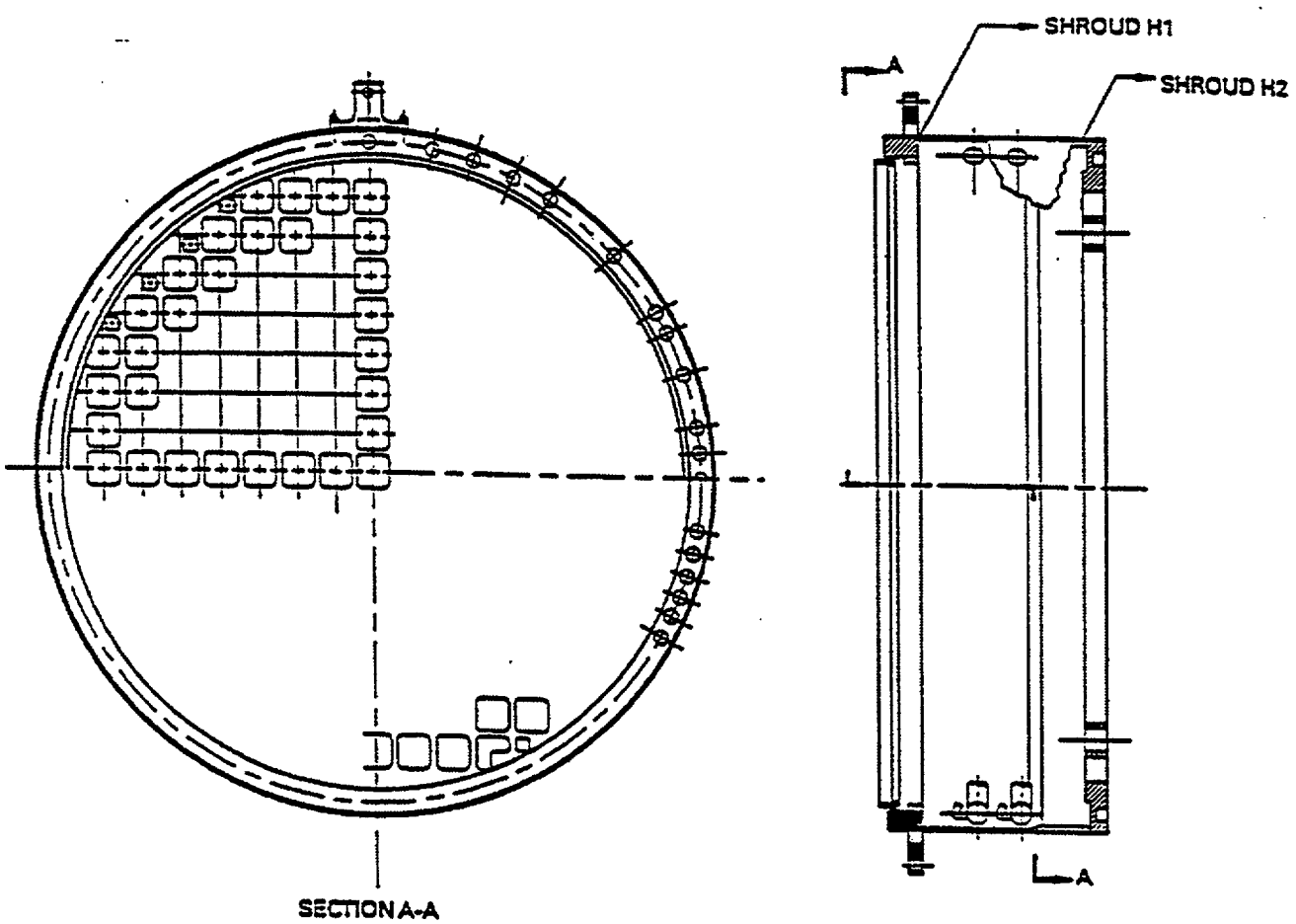

Note: Integral top guide may be more than one plate, connected by a fabrication weld

Figure 3-2. BWR/6 Top Guide Assembly

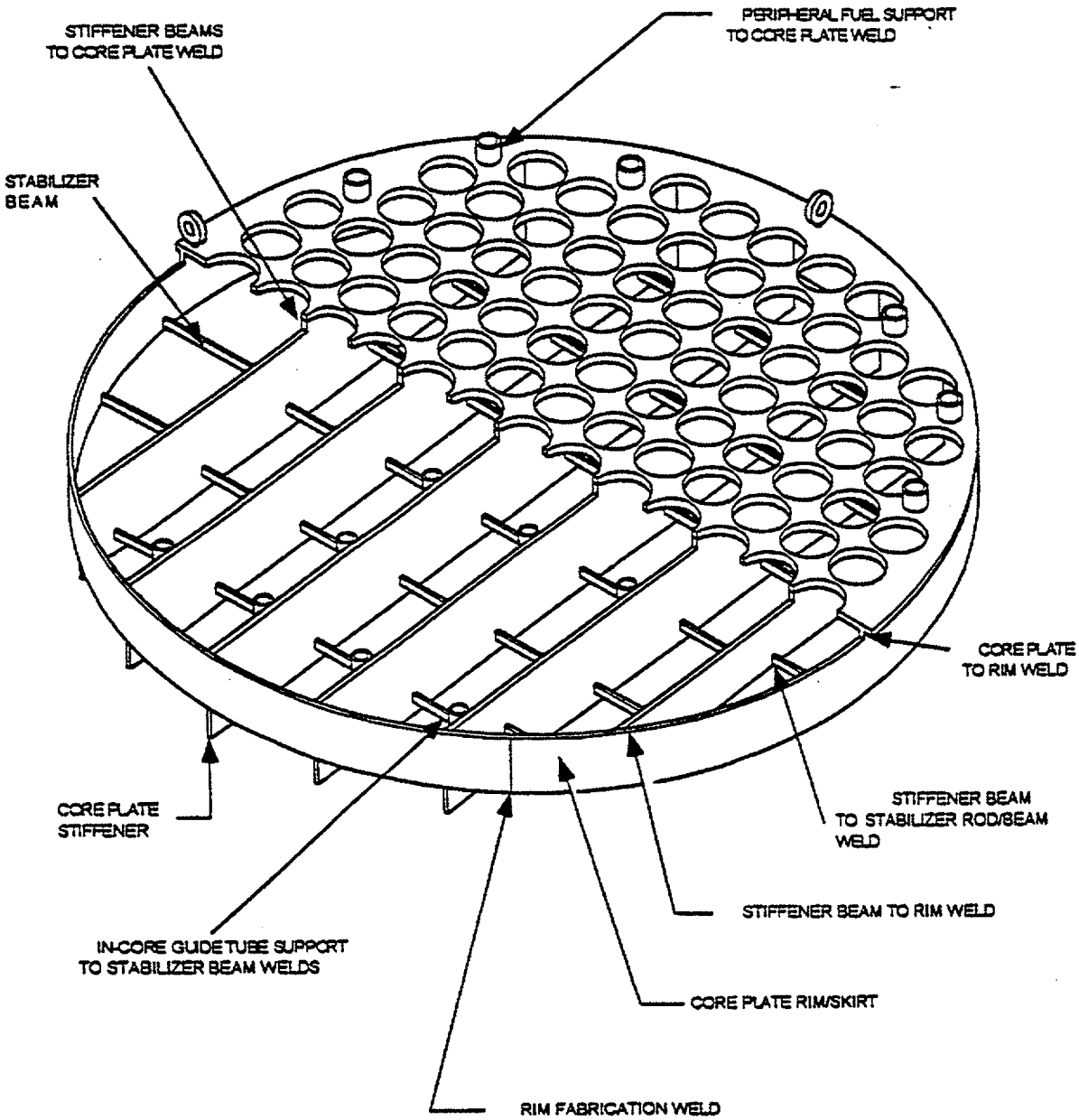

Figure 3-3. BWR/2-5 Core Plate Assembly

4.0 SCOPE OF REPAIR

The scope of the repair addresses:

- Degradation of the top guide/core plate which is found as a result of inspections performed per ASME XI or the recommendations in BWRVIP-25 [6] and -26 [7].

- Addition of structural wedge-type components between the top guide/core plate and shroud in lieu of inspecting certain top guide/core plate components as discussed in BWRVIP-25 [6] and -26 [7].

5.0 DESIGN OBJECTIVES

5.1 Repair Design Life

Contents Deleted -
EPRI Proprietary Information

5.2 Safety Design Bases

Contents Deleted -
EPRI Proprietary Information

5.3 Safety Analysis Events

Contents Deleted -
EPRI Proprietary Information

5.4 Structural Integrity

Contents Deleted -
EPRI Proprietary Information

5.5 Loose Parts Considerations

Contents Deleted -
EPRI Proprietary Information

5.6 Physical Interfaces with Other Reactor Internals

Contents Deleted -
EPRI Proprietary Information

5.7 Installation

Contents Deleted -
EPRI Proprietary Information

Contents Deleted -
EPRI Proprietary Information

5.8 Load Path Alterations

Contents Deleted -
EPRI Proprietary Information

5.9 Existing Structures

Contents Deleted -
EPRI Proprietary Information

6.0 CODES AND STANDARDS

Contents Deleted -
EPRI Proprietary Information

7.0 STRUCTURAL AND DESIGN EVALUATION

Contents Deleted -
EPRI Proprietary Information

7.1 Load Definitions - Applied Loads

Contents Deleted -
EPRI Proprietary Information

Dead Weight (DW)

Contents Deleted -
EPRI Proprietary Information

Differential Pressure (DP)

Contents Deleted -
EPRI Proprietary Information

Hydraulic Loads (F)

Contents Deleted -
EPRI Proprietary Information

Flow Induced Vibration (FIV)

Contents Deleted -
EPRI Proprietary Information

Seismic Inertia

Contents Deleted -
EPRI Proprietary Information

Fuel Lift (FL)

Contents Deleted -
EPRI Proprietary Information

Contents Deleted -
EPRI Proprietary Infromation

Safety Relief Valve (SRV) Discharge

Contents Deleted -
EPRI Proprietary Infromation

LOCA Annulus Pressurization (AP)

Contents Deleted -
EPRI Proprietary Infromation

LOCA Main Vent Clearing (MVC)

Contents Deleted -
EPRI Proprietary Infromation

LOCA Pool Swell, Condensation Oscillation and Chugging (PS, CO, CHG)

Contents Deleted -
EPRI Proprietary Information

7.2 Service Level Conditions

Contents Deleted -
EPRI Proprietary Information

Service Level A (Normal Operating Conditions)

Contents Deleted -
EPRI Proprietary Information

Service Level B (Upset Conditions)

Contents Deleted -
EPRI Proprietary Information

Service Level C (Emergency Conditions)

Contents Deleted -
EPRI Proprietary Information

Service Level D (Faulted Conditions)

Contents Deleted -
EPRI Proprietary Information

7.3 Load Combinations

Contents Deleted -
EPRI Proprietary Information

7.3.1 Mark I Plants

Contents Deleted -
EPRI Proprietary Information

7.3.2 *Mark II and III Plants*

Contents Deleted -
EPRI Proprietary Information

7.4 *Functional Evaluation Criteria*

Contents Deleted -
EPRI Proprietary Information

7.5 *Allowable Stresses*

Contents Deleted -
EPRI Proprietary Information

Contents Deleted -
EPRI Proprietary Information

7.6 Consideration of Shroud Repair or Cracking

Contents Deleted -
EPRI Proprietary Information

7.7 Repair Impact on Existing Internal Components

Contents Deleted -
EPRI Proprietary Information

7.8 Radiation Effects on Repair Design

7.9 Analysis Codes

Contents Deleted -
EPRI Proprietary Information

7.10 Thermal Cycles

Contents Deleted -
EPRI Proprietary Information

7.11 Corrosion Allowance

Contents Deleted -
EPRI Proprietary Information

Table 7-1. Load Combinations for Mark I Plants

Contents Deleted -
EPRI Proprietary Information

Table 7-2. Load Combinations for Mark II and Mark III Plants

Contents Deleted -
EPRI Proprietary Information

Table 7-3. Load Term Definitions for Tables 7-1 and 7-2

Contents Deleted -
EPRI Proprietary Information

8.0 SYSTEM EVALUATION

8.1 Reactor Coolant Flow Distribution and Pressure Drop

Contents Deleted -
EPRI Proprietary Information

8.2 Emergency Operating Procedure (EOP) Calculations

Contents Deleted -
EPRI Proprietary Information

8.3 Power Uprate

Contents Deleted -
EPRI Proprietary Information

9.0 MATERIALS, FABRICATION AND INSTALLATION

9.1 Materials

Contents Deleted -
EPRI Proprietary Information

Contents Deleted -
EPRI Proprietary Information

9.2 Crevices

Contents Deleted -
EPRI Proprietary Information

9.3 Fabrication

Contents Deleted -
EPRI Proprietary Information

Contents Deleted -
EPRI Proprietary Information

9.4 Pre-Installation As-Built Inspection

Contents Deleted -
EPRI Proprietary Information

9.5 Installation Cleanliness

Contents Deleted -
EPRI Proprietary Information

9.6 ALARA

Contents Deleted -
EPRI Proprietary Information

Contents Deleted -
EPRI Proprietary Information

9.7 Qualification of Critical Design Parameters

Contents Deleted -
EPRI Proprietary Information

10.0 INSPECTION AND TESTING

10.1 Inspection Access

Content Deleted -
EPRI Proprietary Information

10.2 Pre and Post Installation Inspection

Content Deleted -
EPRI Proprietary Information

Content Deleted -
EPRI Proprietary Information

12.0 DOCUMENTATION

The following documentation shall be prepared and maintained as permanent records:

Content Deleted -
EPRI Proprietary Information

13.0 REFERENCES

1. Regulatory Guide 1.85, "Materials Code Case Acceptability - ASME Section III, Division 1."

2. Regulatory Guide 1.44, "Control of the Use of Sensitized Stainless Steel."

3. EPRI Document NP-7032, "Material Specification for Alloy X-750 for Use in LWR Internal Components," Revision 1, November 1990.

4. ASTM A-262, "Detecting Susceptibility to Intergranular Attack in Stainless Steel."

5. EPRI Document 84-MG-18, "Nuclear Grade Stainless Steel Procurement, Manufacturing and Fabrication Guidelines," January 1986.

6. EPRI Report TR-107284, "BWR Vessel and Internals Project, BWR Core Plate Inspection and Flaw Evaluation Guidelines (BWRVIP-25)," December 1996.

7. EPRI Report TR-107285, "BWR Vessel and Internals Project, BWR Top Guide Inspection and Flaw Evaluation Guidelines (BWRVIP-26)," December 1996.

8. GENE 771-44-0482, "Justification of Allowable Displacements of the Core Plate and Top Guide - Shroud Repair," Rev. 2, November 16, 1994.

Appendix A

SPECIFIC DESIGN CRITERIA AND REQUIREMENTS FOR WEDGE-TYPE REPAIRS FOR TOP GUIDE AND CORE PLATE

Wedge-type repairs have been proposed by designers to address the various degraded conditions of the top guide and core plate structures as defined in References A-1 and A-2. Wedges are defined as local lateral supports between the core shroud and plate rims of the top guide and core plate structures. The basic configuration of a wedge-type repair for the top guide is illustrated in Figure A-1 and for the core plate is illustrated in Figure A-2.

A.1 Degradation to be Addressed by Repairs

Table 3-2 in both References A-1 and A-2 describe the potential degraded conditions of the top guide and core plate structures. As noted in these tables, certain of the degraded conditions are of concern from a reactor safety standpoint. For these conditions, appropriate inspections are defined in the tables.

Content Deleted -
EPRI Proprietary Information

A.1.1 Top Guide

From Table 3-2 of Reference 1, the potential degraded conditions of the top guide structure which are addressed by wedge-type repairs are those which affect lateral alignment as follows:

Content Deleted -
EPRI Proprietary Information

A.1.2 Core Plate

From Table 3-2 of Reference A-2, the potential degraded conditions of the core plate structure which are addressed by wedge-type repairs are those which affect lateral alignment as follows:

Content Deleted -
EPRI Proprietary Information

A.2 Design Criteria

All design criteria and requirements contained in the body of this report are applicable for the design, analysis, fabrication and installation of wedge-type repairs.

Content Deleted -
EPRI Proprietary Information

A.3 Structural Analyses

Content Deleted -
EPRI Proprietary Information

Content Deleted -
EPRI Proprietary Information

A.4 Design-Reliant Structures and Welds

Content Deleted -
EPRI Proprietary Information

A.5 Wedge-Type Repair Assembly Locations

Content Deleted -
EPRI Proprietary Information

A.6 Effects on Fuel, Other Internals and Refueling

Content Deleted -
EPRI Proprietary Information

Content Deleted -
EPRI Proprietary Information

A.7 References

A-1. EPRI TR-107285, "BWR Top Guide Inspection and Flaw Evaluation Guidelines (BWRVIP-26)," December 1996.

A-2. EPRI TR-107284, "BWR Core Plate Inspection and Flaw Evaluation Guidelines (BWRVIP-25)," December 1996.

A-3. EPRI TR-105747, "Guidelines for Reinspection of BWR Core Shrouds (BWRVIP-07)," February 1996.

A-4. GENE-771-0894, Rev. 2, "Justification for Allowable Deflections of the Core Plate and Top Guide-Shroud Repair," November 16, 1994.

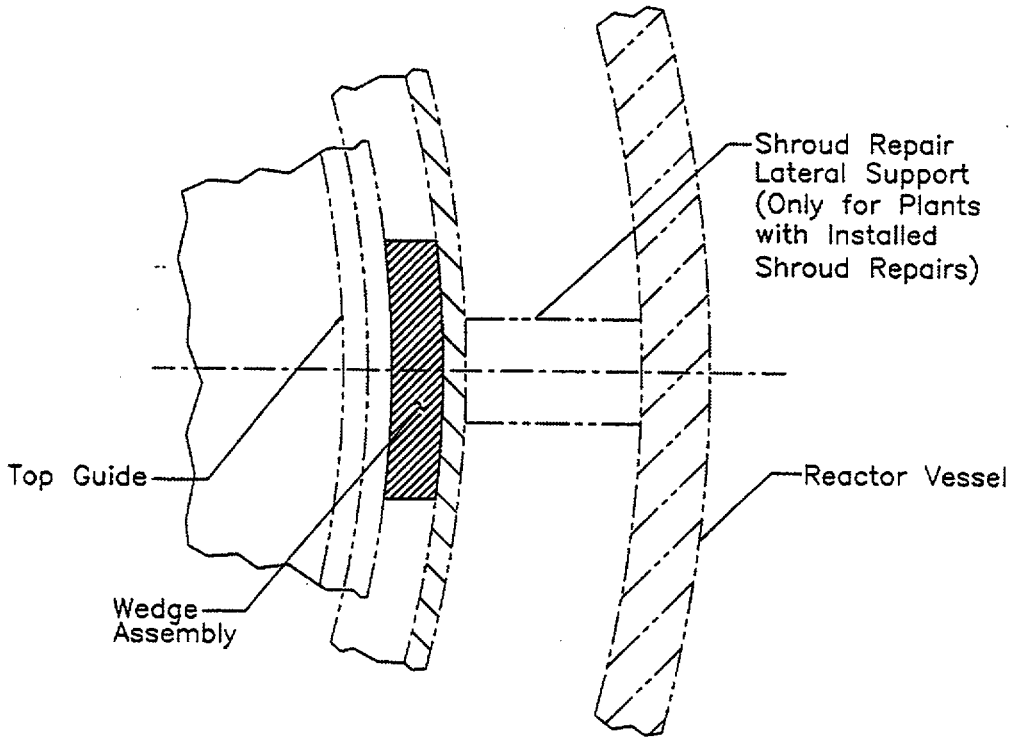

Plan View

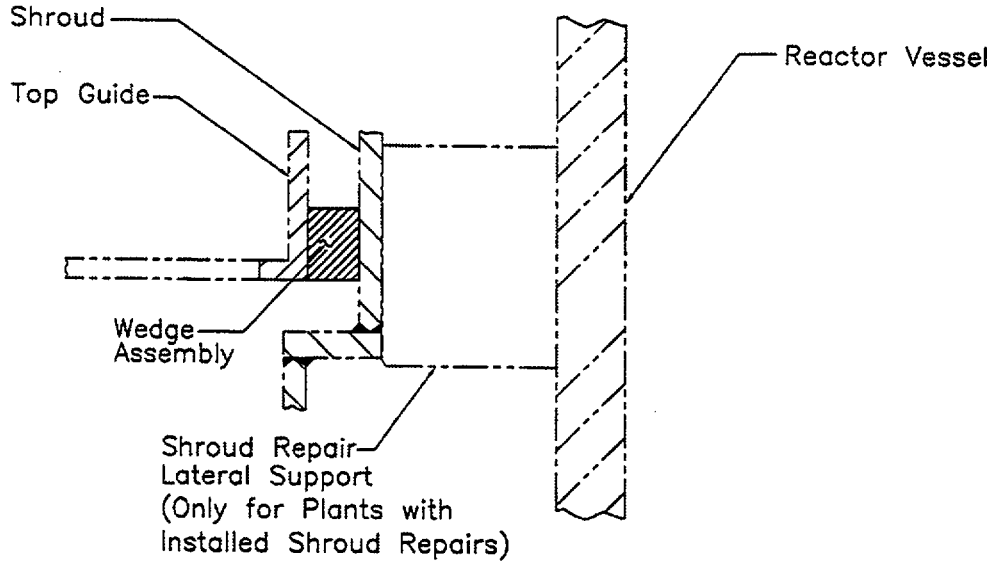

Elevation View

Figure A-1. Wedge Repair Arrangement - Top Guide

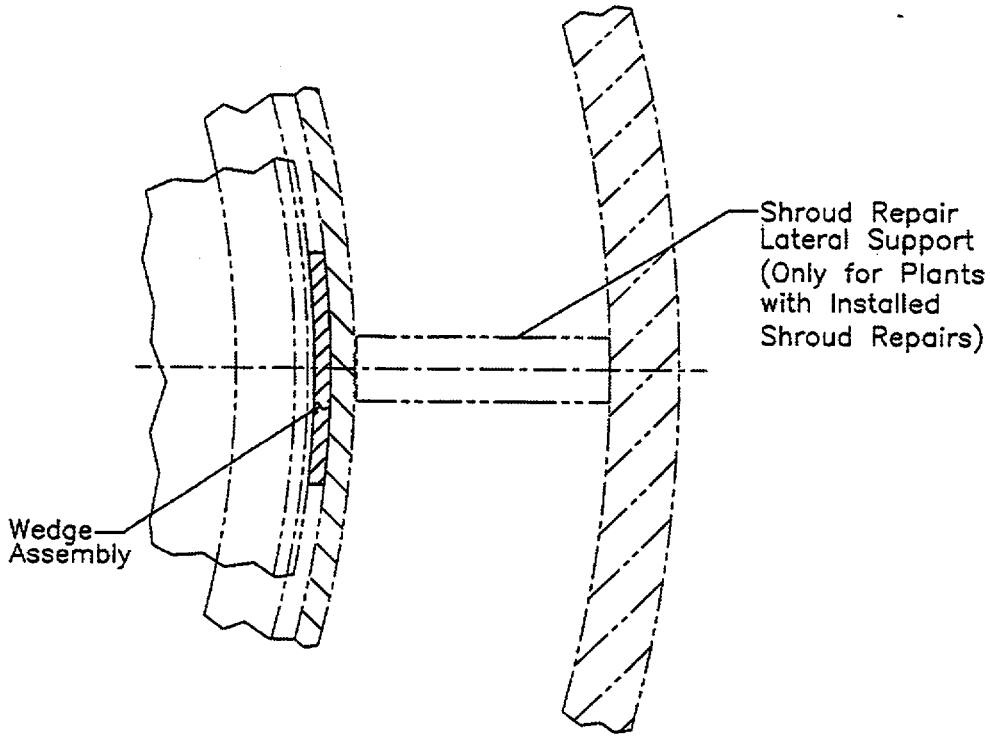

Plan View

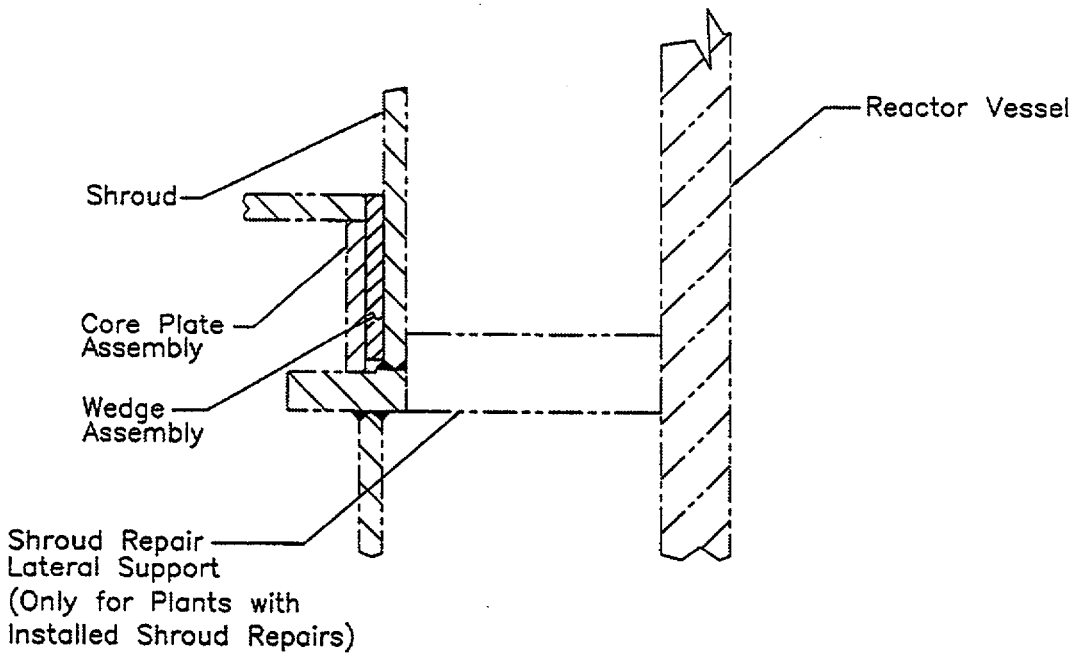

Elevation View

Figure A-2. Wedge Repair Arrangement - Core Plate

Figure A-1. Wedge Repair Arrangement – Top Guide

Figure A-1. Wedge Repair Arrangement – Core Plate

Target:
Nuclear Power

About EPRI

EPRI creates science and technology solutions for the global energy and energy services industry. U.S. electric utilities established the Electric Power Research Institute in 1973 as a nonprofit research consortium for the benefit of utility members, their customers, and society. Now known simply as EPRI, the company provides a wide range of innovative products and services to more than 1000 energy-related organizations in 40 countries. EPRI's multidisciplinary team of scientists and engineers draws on a worldwide network of technical and business expertise to help solve today's toughest energy and environmental problems.

EPRI. Powering Progress

© 2 Electric Power Research Institute (EPRI), Inc. All rights reserved. Electric Power Research Institute and EPRI are registered service marks of the Electric Power Research Institute, Inc. EPRI. POWERING PROGRESS is a service mark of the Electric Power Research Institute, Inc.

Printed on recycled paper in the United States of America

EPRI • 3412 Hillview Avenue, Palo Alto, California 94304 • PO Box 10412, Palo Alto, California 94303 • USA
800.313.3774 • 650.855.2121 • askepri@epri.com • www.epri.com