FOR INFORMATION ONLY

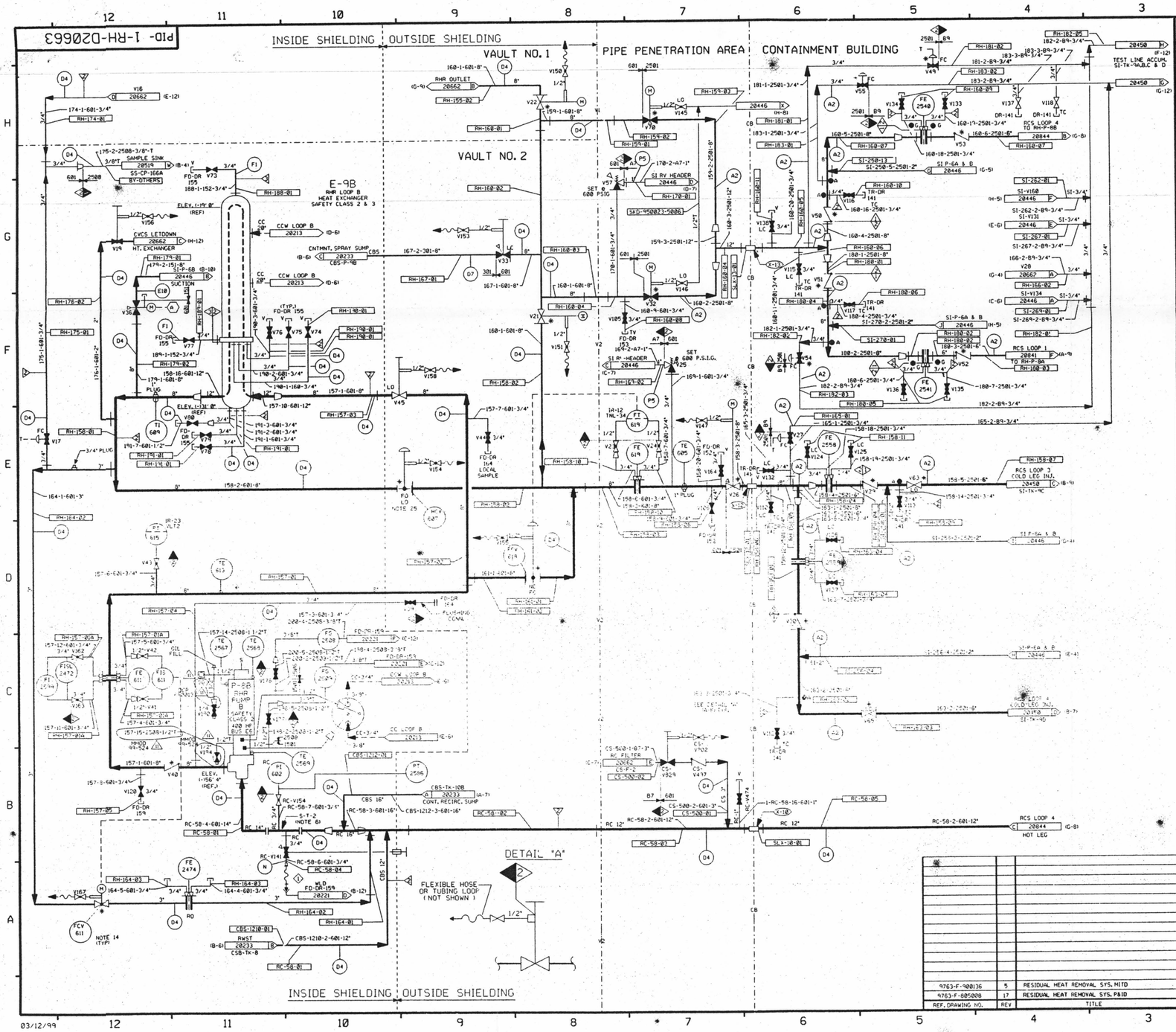

FOR P&ID REFERENCE DRAWINGS, SYMBOLS AND ABBREVIATIONS REFER TO DRAWINGS P&ID - LEGEND 1 AND P&ID - LEGEND 2

◇1 FURTHER ENGINEERING EVALUATION TO EFFECT ECA 99/11518C.

LEGEND

		DESIGN PRESSURE	TEST PRESSURE	MIN. TEST TEMP° F	TEST MEDIUM
	TEST BOUNDARY				
A2	INTEGRITY TEST	2485 PSIG	3106/3292 PSIG	35	DM WATER
D5	INTEGRITY TEST	300 PSIG	375/398 PSIG	35	DM WATER
D4	INTEGRITY TEST	600 PSIG	750/795 PSIG	35	DM WATER
D7	INTEGRITY TEST	350 PSIG	437.5/463 PSIG	35	DM WATER
E10	INTEGRITY TEST	220 PSIG	275/291 PSIG	35	DM WATER
F1	INTEGRITY TEST	150 PSIG	187.5/199 PSIG	35	DM WATER
P5	INTEGRITY TEST	(15) 15 PSIG	18/22.5 PSIG	35	AIR
N	NO TEST REQUIRED				

NOTE:
A. VENTS & DRAINS (ASME CL. 2 & 3) SHALL BE TESTED TO THE LAST ISOLATION VALVE.
B. ASME (D4) TEST IS EXTENDED TO THE ANSI PORTION PER MM-13001A.
C. RELIEF VALVE DISCHARGE PIPING FOR VALVE V-25 MUST BE FILLED WITH WATER TO ITS MAXIMUM ELEVATION DURING PRESSURE TESTING.
D. FOR ASME THAT HAVE THE HYDROSTATIC TEST UNDER ANSI B31.1 CRITERIA, THE TEST DOES NOT OVERSTRESS PIPING SYSTEM PER THE STRESS REPORT.

NOTES:
1. WORK THIS DRAWING WITH DRAWINGS 20660 & 20662. PORTIONS OF THIS DRAWING ARE DUPLICATED ON DRAWING SI-20446, SI-20448 & SI-20449 DUE TO DUAL SYSTEM FUNCTIONS.
2. ALL LINES, VALVES, EQUIPMENT, COMPONENTS AND INSTRUMENTS HAVE SYSTEM PREFIX RH, UNLESS NOTED OTHERWISE.
3. ● INDICATES 3/8" FLOW RESTRICTOR INSTALLED. SEE APPLICABLE DETAIL ON DRAWING RC-20848.
4. DELETED
5. REFER TO DRAWING VSL-20774 FOR VALVE LEAKOFFS.
6. PERMANENT SPOOL PIECE INSTALLATION SHOWN TEMP. STRAINER IS USED IN PLACE OF SPOOL PIECE DURING INITIAL FLUSHING OPERATION. STRAINER TO BE REMOVED BEFORE PLANT START-UP.
7. INSTRUMENTATION:
   (A) INTERLOCKED WITH SI-V89, SI-V90, SI-V93 (DWG. 20446) CBS-V14 (DWG. 20233) RC-V87, & RC-V88 (DWG. 20844).
8. VENTS, DRAINS, TEST (DUN & ORIFICE TAP PIPING CODE BREAKS ARE AT THE DOWNSTREAM END OF THE OUTER ISOLATION VALVE PER 1-SHM-805III. UNLESS NOTED OTHERWISE.
9. DELETED
10. DELETED
11. DELETED
12. △ INDICATES REVISION LEVEL.
13. DELETED
14. ✱ INDICATES VALVE SUPPLIED BY WESTINGHOUSE. ✱
15. DELETED
16. DELETED
17. CLEANLINESS CLASS "B".
18. DELETED
19. DELETED
20. DELETED
21. DELETED
22. SO NO. NMM NCH-283
23. DELETED
24. ⊤ INDICATES OPEN ITEM NUMBER.
25. MANUALLY HANDWHEEL LOCKED OPEN EXCEPT DURING MIDLOOP.

PORTIONS OF THIS DRAWING ARE
NUCLEAR SAFETY RELATED

REV	DATE	DSGN	DRWN	CHKD	CDE	SES	DESCRIPTION
11	9/9/99	DWS	—	MPW	RCJ	VWS	REINCORP DCR 990013 CA#22
10	11/14/97	BCL	—	MPW	HWM	DMD	INCORP MMOD 94-524 DCN 20
9	11/27/96	BCL	—	MPW	RRC	DMD	PARTIAL INCORP MMOD 94-555 CA3
8	4/10/95	BCL	—	DWS	MPW	[illegible]	INCORP DCR 95-23 CA8
7	3/20/94	BCL	—	MRB	DWS	GRM	INCORP DCR 94-54 CA8
6	10/5/92	MRB	—	DWS	NCL	DMP	INCORP MMOD 92-552 CA8
5	04/27/92	MRB	—	DWS	BCL	RRB	INCORP MMOD 91-515 CA8
4	11/11/89	MRB	RMC	PAL	APL	GRM	INCORP DCR 87-422 CA 13, 89-13, 14 & 23, 89-32 CA8, 87-136 CA11 & 86-[illegible] DELETED NOTE 18, DWG. ENHANCEMENTS INCORPORATED DCR 87-349 REV. PIPING TO REFLECT AS INSTALLED CONF. & TO CLARIFY REDUNDANT FOR. DUPLICATION, DWG. CONT. NOTES 1, 3 & 8 ISO DWG. NO. & LEGEND NOTE A 1-28 A78.2-F-NM0008, RE: INCORP NCR [illegible] ADDEDDET. 91 NOTE FOR INDICATING NEW FLOW RESTRICTOR INDICATION & ALPHA DESIGNATION FOR ISOL. VALVES & NOTES 3 & 8 NOTE FOR SUPERSEDING NOTES 3 & 8 ADDED NOTE FOR SUPERSEDING NOTES 3 & 8 ADDED NOTE 24 & 25 REVISED DRAWING SIZE DUE PER NOTE 8 ADDED ITEM, NMS-1 CL. BOUNDARY
3	08/30/87	GPM	JM	DWS	BCL	POS	REVISED RC-V154 TO BE SHOWN OPEN PER LOOP FUNCTIONAL DESIGN NCR EC-[illegible] ADDED INCOMPLETE ITEM.
2	11/26/86	MRJ	TAK	WRD	BCL	RRC	
1	9/9/86	MRB	—	MPW	RCJ	VWS	REINCORP DCR 890013 CA#22

REF. DRAWING NO.	REV	TITLE
9763-F-900136	5	RESIDUAL HEAT REMOVAL SYS. MITD
9763-F-805008	17	RESIDUAL HEAT REMOVAL SYS. P&ID

North Atlantic Energy Service Corporation

SEABROOK STATION

RESIDUAL HEAT REMOVAL SYS.
TRAIN B CROSS-TIE
DETAIL

PID- 1-RH-D20663

D-59