FOR INFORMATION ONLY

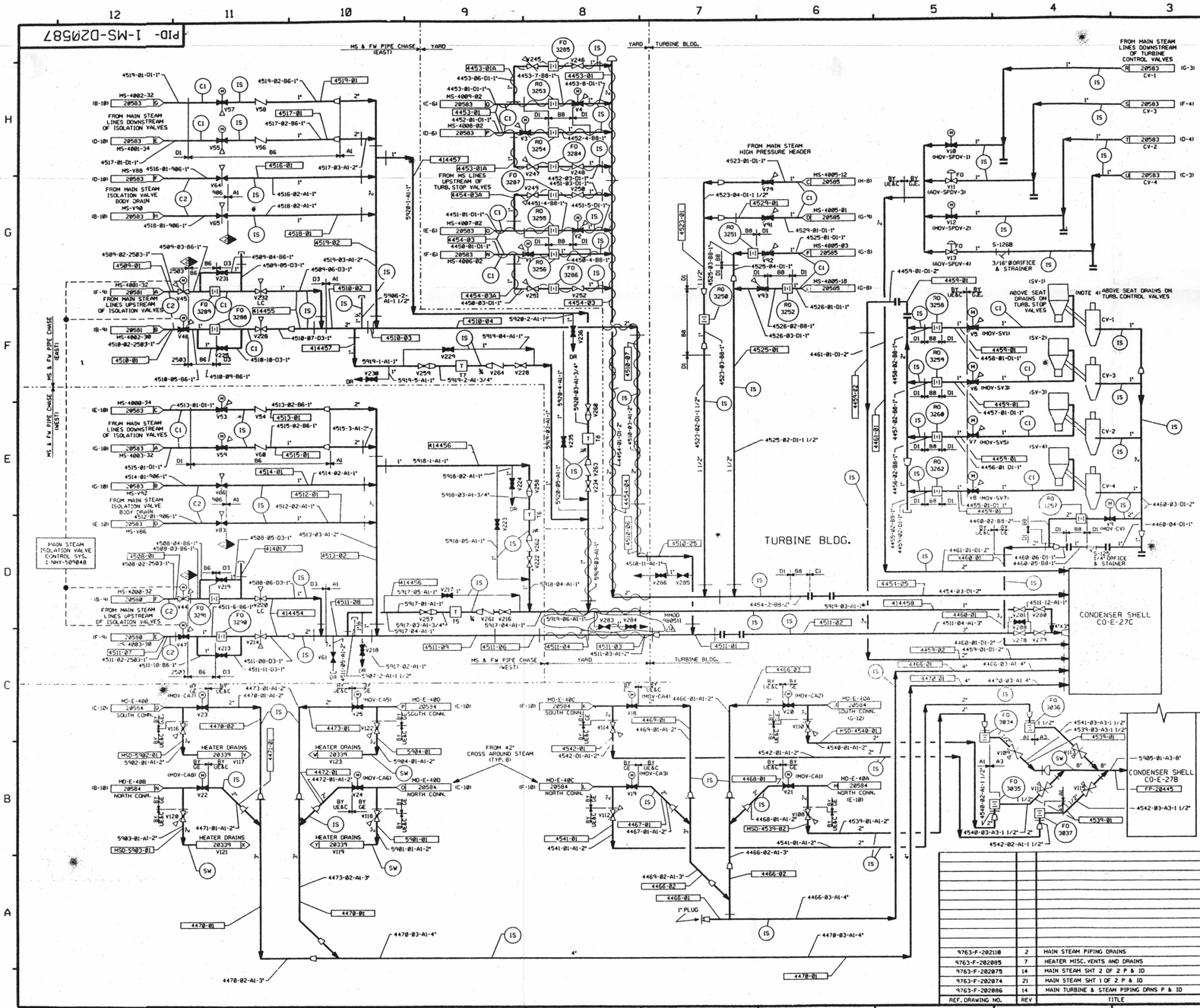


FOR P&ID REFERENCE DRAWINGS, SYMBOLS AND ABBREVIATIONS REFER TO DRAWINGS P&ID - LEGEND 1 AND P&ID - LEGEND 2

## LEGEND

| | | DESIGN PRESSURE | TEST PRESSURE | MIN. TEST TEMP °F | TEST MEDIUM |
|---|---|---|---|---|---|
| | TEST BOUNDARY | | | | |
| TB | TEMPORARY TEST BOUNDARY | | | | |
| C1 | INTEGRITY TEST | IS 1185 PSIG | 1778/1885 PSIG | 35 | WATER |
| C2 | INTEGRITY TEST | 1185 PSIG | 148/1578 PSIG | 35 | WATER |
| SW | STANDING WATER | | | | |
| IS | INITIAL SERVICE | | | | |

NOTE: A. VENTS & DRAINS WITH CAPS/BLIND FLANGES ETC. SHALL BE TESTED TO THE LAST ISOLATION VALVE.

PORTIONS OF THIS DRAWING ARE **NUCLEAR SAFETY RELATED**

NOTES:
1. WORK THIS DRAWING WITH DRAWINGS 20579 THRU 20586.
2. ALL LINES, EQUIPMENT, COMPONENTS AND INSTRUMENTS HAVE SYSTEM PREFIX MSD, UNLESS NOTED OTHERWISE.
3. ALL LINES, EQUIPMENT, COMPONENTS AND INSTRUMENTS ARE SAFETY CLASS NNS, UNLESS NOTED OTHERWISE.
4. MAIN STEAM CONTROL & STOP VALVES ARE SHOWN ON DRAWING 20583.
5. ( ) G.E. VALVE IDENTIFICATION
6. CLEANLINESS CLASS "C"
7. DELETED
8. DELETED
9. S.D. NO. IS S.D.-3
10. △ INDICATES REVISION LEVEL

| REV | DATE | DSGN | DRWN | CHKD | CDE | SES | DESCRIPTION |
|---|---|---|---|---|---|---|---|
| 12 | 1/6/99 | BCS | — | [illegible] | [illegible] | [illegible] | INCORP. MMOD 980511 DCN#00 |
| 11 | 4/23/98 | DWS | — | BCS | RWS | MKC | PARTIAL INCORP. MMOD 980511 DCN#00 |
| 10 | 6/2/98 | DRL | — | BCS | MPW | VWS | INCORP. MMOD 97-521 DCN 00 & 02 |
| 9 | 3/21/95 | MRB | — | DWS | BCL | SD | INCORP. DCR 920005 CA#9, DCR 930028 CA#3 & ADDED LINE NUMBER PER REFERENCE ISO. |
| 8 | 1/21/92 | MRB | — | BCL | JEV | RRC | INCORP. MMOD'S 90-633 CA01 AND 91-915 CA02 |
| 7 | 9/23/91 | GPM | JM | FCB | MRB | RSG | INC. SUP. DCR'S 90-30 CA10 & 90-32 CA0 |
| 6 | 5/21/90 | MRB | RMC | JM | BCL | IW | RE-INCORPORATED MMOD 90-577 CA 0 |
| 5 | 5/15/90 | MRB | RMC | JM | APL | RSH | INCORP. MMOD 90-577 CA 0 DELETED NOTE 7 |
| 4 | 2/5/90 | MRB | JM | APL | RSG | IW | INCORPORATED DCR 89-34, CA0 |
| 3 | 2/24/89 | MRB | RMC | PAL | APL | WFD | INCORPORATED DCR 88-94, CA0 AND DMR 89-4 CA0 REVISED LINE NO. PER UE & C P & ID REVISED LEGEND NOTE A PER ANSI B31.1 1977 SEC 137.2E |
| 2 | 1/20/88 | MPW | RMC | BCL | GPM | RRC | ADDED: NOTE 10 & REF. COORDINATES. & P & ID LEGEND NOTE REVISED/DUPLICATE VALVE NO. PER UE & C P & ID F-202118 INCORP. DCR 86-714, REV'D NOTE 3,4 & LEGEND NOTE PER ANSI B31.1 1977 SEC 137.2E DELETED: BR SYMBOL & NOTE 8. |
| 1 | 6/26/87 | JDM | HIW | PAL | BCL | RRC | REVISED TIE-IN PER F-414017. |
| 0 | 9/2/86 | TAK | UE&C CADD | MAP | BCL | RRC | |

| REF. DRAWING NO. | REV | TITLE |
|---|---|---|
| 9763-F-202118 | 2 | MAIN STEAM PIPING DRAINS |
| 9763-F-202085 | 7 | HEATER MISC. VENTS AND DRAINS |
| 9763-F-202075 | 14 | MAIN STEAM SHT 2 OF 2 P & ID |
| 9763-F-202074 | 21 | MAIN STEAM SHT 1 OF 2 P & ID |
| 9763-F-202086 | 14 | MAIN TURBINE & STEAM PIPING DRNS P & ID |

**North Atlantic** Energy Service Corporation

SEABROOK STATION

MAIN STEAM SYSTEM
MAIN STEAM DRAINS
DETAIL

PID- 1-MS-D20587

08/24/99

D-49