FOR INFORMATION ONLY

PID- 1-MS-D20580

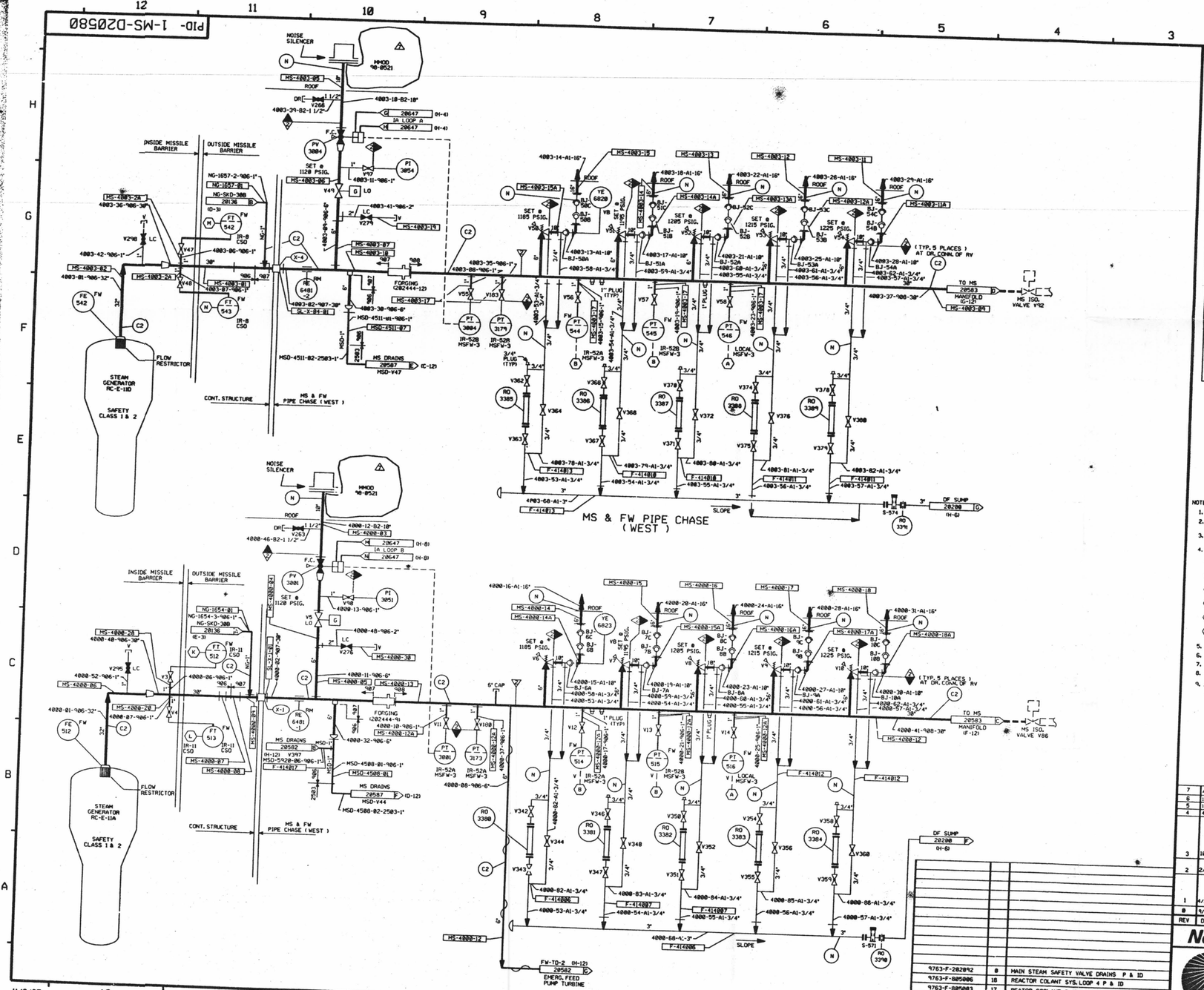

FOR P&ID REFERENCE DRAWINGS, SYMBOLS AND ABBREVIATIONS REFER TO DRAWINGS P&ID - LEGEND 1 AND P&ID - LEGEND 2

LEGEND

		DESIGN PRESSURE	TEST PRESSURE	MIN. TEST TEMP °F	TEST MEDIUM
	TEST BOUNDARY				
TB	TEMPORARY TEST BOUNDARY				
C1	INTEGRITY TEST	(IS) 1185 PSIG	1778/1885 PSIG	SEE NOTE B	D.M. WATER
C2	INTEGRITY TEST	1185 PSIG	1481/1570 PSIG	SEE NOTE B	D.M. WATER
SW	STANDING WATER				
IS	INITIAL SERVICE	N.O.P.			
N	NO TEST REQUIRED				

NOTE: A. VENTS & DRAINS WITH CAPS/BLIND FLANGES ETC. (ASME CL. 2 AND 3) SHALL BE TESTED TO THE LAST ISOLATION VALVE.
B. MINIMUM TEST TEMP OF 100 F IS REQUIRED FOR ALL NOMINAL PIPE DIAMETERS GREATER THAN 12" OR HAVING A WALL THICKNESS OF 5/8".

NOTES:
1. WORK THIS DRAWING WITH DRAWINGS 20579 & 20581 THRU 20587.
2. ALL LINES, EQUIPMENT, COMPONENTS AND INSTRUMENTS HAVE SYSTEM PREFIX MS, UNLESS NOTED OTHERWISE.
3. VENTS, DRAINS AND TEST CONNECTION CODE BREAKS ARE AT THE DOWN STREAM END OF THE OUTER ISOLATION VALVE PER 1-MHY-00511, UNLESS NOTED OTHERWISE.
4. INSTRUMENT REFERENCES:
   - (A) STEAM PRESSURE PROTECTION SYSTEM
   - (B) STEAM PRESSURE MISMATCH SYSTEM
   - (K) TO 1-FW-LT-541, LT-551 & LT-4310 ON DWG. 1-FW-20686
   - (L) TO 1-FW-LT-519 ON DWG. 1-FW-20686.
   - (M) TO 1-FW-LT-4340, LT-504 & LT-547 ON DWG. 1-FW-20686.
   - (N) TO 1-FW-LT-549 ON DWG. 1-FW-20686
5. DELETED
6. CLEANLINESS CLASS "C".
7. DELETED
8. SD NO 15 S.D.3
9. △ INDICATES REVISION LEVEL

PORTIONS OF THIS DRAWING ARE
NUCLEAR SAFETY RELATED

REV	DATE	DSGN	DRAWN	CHKD	CDE	SES	DESCRIPTION
7	4/17/99	RWS	—	BCL	DWS	GPM	INCORP MMOD 98 0521 DCN 00
6	11/3/95	BCL	—	MPM	DWS	GPM	INCORP. DCR 95-32 CA8, DCR 95-29 CA-8
5	11/29/94	DWS	—	MPM	BCL	MHO	INCORP. MMOD 930545 CA10
4	4/28/92	MRB	—	BCL	DWS	RGR	INCORP. MMOD 91-515 CA8
3	10/9/91	GPM	FCB	JM	MRB	RRC	INCORP. DCR 90-32 CA8 REVISED NOTE 3, NOTE 5 TO LEGEND NOTE B IN LEGEND, LEGEND NOTE A ADDED ALPHA DESIGNATION A TO LEGEND NOTE, LEGEND NOTE B DELETED MS-1 SYMBOL, ASME CLASS BREAK PER NOTE 3, NOTE 5
2	2/2/90	MRB	FCB	APL	WCL	IW	INCORPORATED DCR 87-178 CA 82 DELETED NOTE 7
1	4/28/88	MPM	JM	BCL	DWS	RRC	ADDED REFERENCE DWG NOTE, NOTE 4, REF. COORD AND LINE CONT. TO DF SUMP REVISED LINE NO'S PER ERECTION ISSUE 8, LEGEND NOTE PER 9763-F-080883, DELETED CLASS BREAK PER NOTE 3.
0	9/12/86	TAK	[illegible]	MAP	BCL	RRC	ISSUED FOR OPERATIONS

REF. DRAWING NO.	REV	TITLE
9763-F-202092	0	MAIN STEAM SAFETY VALVE DRAINS P & ID
9763-F-805006	18	REACTOR COLANT SYS. LOOP 4 P & ID
9763-F-805003	17	REATOR COOLANT SYS. LOOP 1 P & ID
9763-F-202074	21	MAIN STEAM SHT. 1 OF 2 P & ID.

North Atlantic Energy Service Corporation

SEABROOK STATION

MAIN STEAM SYSTEM
MAIN STEAM HEADERS
DETAIL

PID- 1-MS-D20580

11/3/95

D-45