FOR INFORMATION ONLY

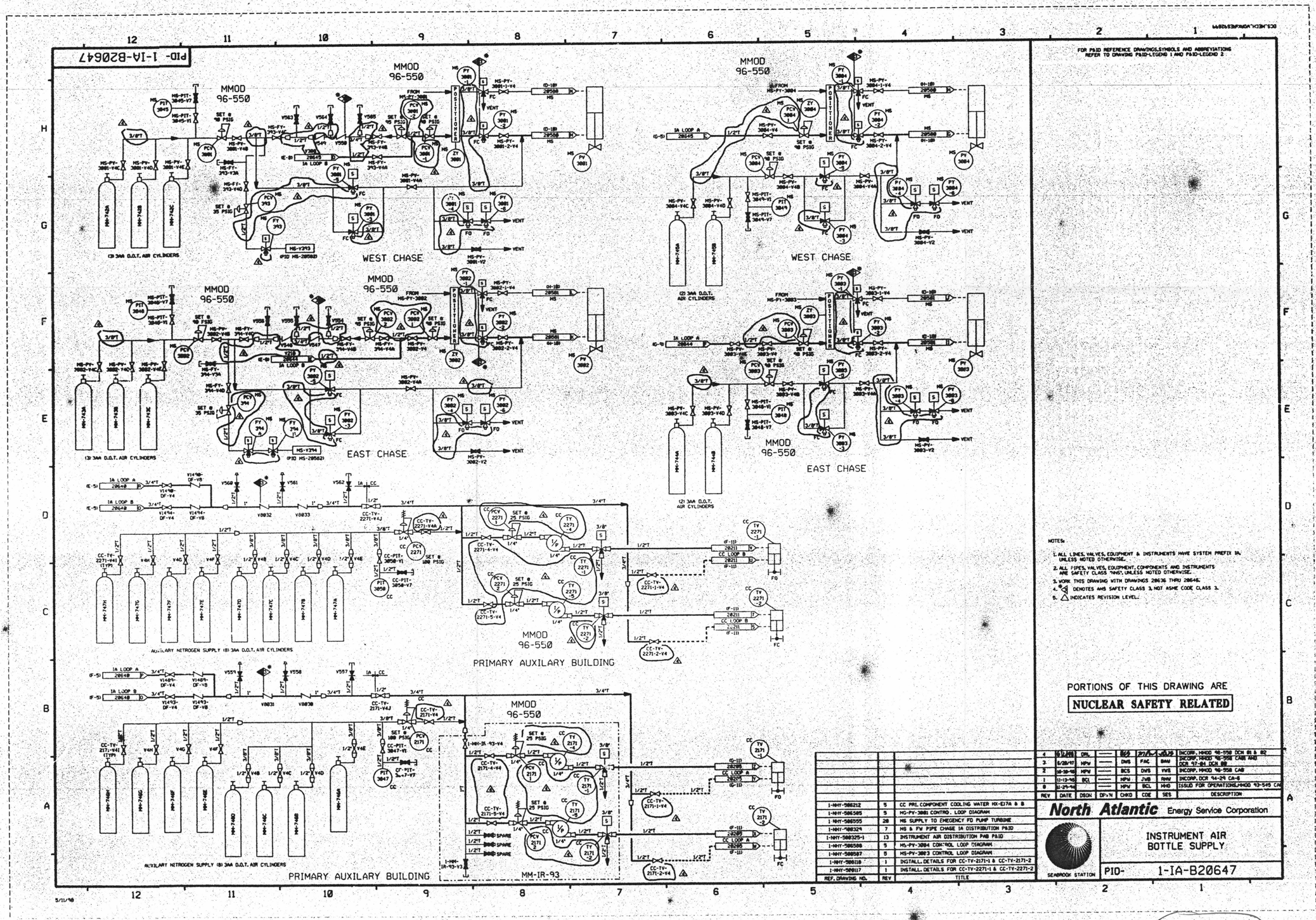

FOR P&ID REFERENCE DRAWINGS,SYMBOLS AND ABBREVIATIONS REFER TO DRAWING P&ID-LEGEND 1 AND P&ID-LEGEND 2

NOTES:

1. ALL LINES, VALVES, EQUIPMENT & INSTRUMENTS HAVE SYSTEM PREFIX IA, UNLESS NOTED OTHERWISE.
2. ALL PIPES, VALVES, EQUIPMENT, COMPONENTS AND INSTRUMENTS ARE SAFETY CLASS "NNS", UNLESS NOTED OTHERWISE.
3. WORK THIS DRAWING WITH DRAWINGS 20636 THRU 20646.
4. ⊗ DENOTES ANS SAFETY CLASS 3, NOT ASME CODE CLASS 3.
5. △ INDICATES REVISION LEVEL.

PORTIONS OF THIS DRAWING ARE

NUCLEAR SAFETY RELATED

REF. DRAWING NO.	REV	TITLE
1-NHY-506212	5	CC PRI. COMPONENT COOLING WATER HX-E17A & B
1-NHY-506505	5	MS-PV-3001 CONTRO. LOOP DIAGRAM
1-NHY-506555	20	MS SUPPLY TO EMEGENCY FD PUMP TURBINE
1-NHY-500329	7	MS & FW PIPE CHASE IA DISTRIBUTION P&ID
1-NHY-500325-1	13	INSTRUMENT AIR DISTRIBUTION PAB P&ID
1-NHY-506508	5	MS-PV-3004 CONTROL LOOP DIAGRAM
1-NHY-506507	5	MS-PV-3003 CONTROL LOOP DIAGRAM
1-NHY-506118	1	INSTALL. DETAILS FOR CC-TV-2171-1 & CC-TV-2171-2
1-NHY-506117	1	INSTALL. DETAILS FOR CC-TV-2271-1 & CC-TV-2271-2

REV	DATE	DSGN	DFN	CHKD	CDE	SES	DESCRIPTION
4	[illegible]	DRL	—	[illegible]	[illegible]	[illegible]	INCORP. MMOD 96-550 DCN 01 & 02
3	6/28/97	MPW	—	DWS	FAC	BAW	INCORP. MMOD 96-550 CAN AND DCR 97-04 DCN 00
2	10-30-96	MPW	—	BCS	DWS	VWS	INCORP. MMOD 96-550 CAB
1	11-13-96	BCL	—	MPW	JWB	RMW	INCORP. DCR 94-29 CA-6
0	11-29-94		—	MPW	BCL	MHD	ISSUED FOR OPERATIONS,MMOD 93-545 CA

North Atlantic Energy Service Corporation

SEABROOK STATION

INSTRUMENT AIR BOTTLE SUPPLY

PID- 1-IA-B20647

D-43