Braidwood Station
Appendix F Change Summary
ODCM Revision 4, August 1999

Page or Section	Change Description
F-i	Updated revision number.
F-iii,-iv	Updated page numbers.
F-2	Removed reference to an old Technical Specification section.
F-4	Updated nearest resident column heading to include the words, "within 6.2 miles". Updated nearest resident information for the SSE direction. Changed year to "1998" for census data.
F-8	Updated nearest meat animal radius and D/Q for the SW direction.
F-47	Corrected spelling of the word "restricted".

APPENDIX F

BRAIDWOOD ANNEX INDEX

REVISION 4

APPENDIX F
STATION-SPECIFIC DATA FOR BRAIDWOOD UNITS 1 AND 2
TABLE OF CONTENTS

		PAGE
F.1	INTRODUCTION	F-1
F.2	REFERENCES	F-1

APPENDIX F
LIST OF TABLES

NUMBER	TITLE	PAGE
F-1	Aquatic Environmental Dose Parameters	F-2
F-2	Station Characteristics	F-3
F-3	Critical Ranges	F-4
F-4	Average Wind Speeds	F-5
F-5	X/Q and D/Q Maxima At or Beyond the Unrestricted Area Boundary	F-6
F-5a	X/Q and D/Q Maxima At or Beyond the Restricted Area Boundary	F-7
F-6	D/Q at the Nearest Milk Cow and Meat Animal Locations Within 5 Miles	F-8
F-7	Maximum Offsite Finite Plume Gamma Dose Factors Based on 1 cm Depth at the Unrestricted Area Boundary for Selected Nuclides	F-9
F-7a	Maximum Offsite Finite Plume Gamma Dose Factors Based on 1 cm Depth at the Restricted Area Boundary for Selected Nuclides	F-24

Supplemental Tables

A	Mixed Mode Joint Frequency Distribution Table Summaries - 203 and 34 Foot Elevation Data -Summary Table of Percent by Direction and Class -Summary Table of Percent by Direction and Speed -Summary Table of Percent by Speed and Class	F-39
B	Ground Level Joint Frequency Distribution Table Summaries -Summary Table of Percent by Direction and Class -Summary Table of Percent by Direction and Speed -Summary Table of Percent by Speed and Class	F-44

APPENDIX F
LIST OF FIGURES

NUMBER	TITLE	PAGE
F-1	Unrestricted Area Boundary	F-46
F-2	Restricted Area Boundary	F-47

APPENDIX F
STATION-SPECIFIC DATA FOR BRAIDWOOD UNITS 1 AND 2

F.1 INTRODUCTION

This appendix contains data relevant to the Braidwood site. Included is a figure showing the unrestricted area boundary and values of parameters used in offsite dose assessment.

F.2 REFERENCES

1. Sargent & Lundy, Nuclear Analysis and Technology Division Braidwood Calculation No. ATD-0149, Revisions 0, 1, 2, and 3, 3/30/95 for Braidwood.

2. "Assessment of the Impact of Liquid Radioactive Effluents from Braidwood Station on Proposed Public Water Intakes at Wilmington, Illinois", J.C. Golden NSEP, January 1990.

3. "Verification of Environmental Parameters Used for Commonwealth Edison Company's Offsite Dose Calculations," NUS Corporation, 1988.

4. "Verification of Environmental Parameters Used for Commonwealth Edison Company's Offsite Dose Calculations," NUTECH Engineers Group, 1992.

Table F-1
Aquatic Environmental Dose Parameters

General Information

There is no irrigation ocurring on the Kankakee River downstream of the station.

Recreation includes one or more of the following: boating, waterskiing, swimming, and sport fishing.

Downstream dams are within 50 miles of the station. One is located on the Kankakee. The other is the Illinois River at Dresden Island, Marseilles and Starved Rock. The Kankakee River flows into the Illinois River about 12 river miles downstream of the station.

This is based on information in Figure 2.1-13 of the Braidwood Environmental Report and in Section 2.4.1.1 and Figure 2.4-2 of the LaSalle Environmental Report.

Water and Fish Ingestion Parameters

Parameter[a]	Value
U^w, water usage, L/hr	0.042
U^f, fish consumption, kg/hr	2.4E-3
$1/M^w$, $1/M^f$	0.25, 1.0
F^w, cfs	3950
F^f, cfs	3950
t^f, hr[b]	24.0
t^w, hr[c]	3.0

Limits on Radioactivity in Unprotected Outdoor Tanks[d]

Outside Temporary Tank $\leq$ 10 Ci[e]

per Technical Specification 5.5.12

---

[a] The parameters are defined in Section A.2.1 of Appendix A.

[b] t^f (hr) = 24 hr (all stations) for the fish ingestion pathway

[c] t^w (hr) = 3 hr (distance nearest potable water intake, to Wilmington, is 4 river miles downstream; a flow rate of 1.4 mph is assumed)

[d] See Section A.2.4 of Appendix A.

[e] Tritium and dissolved or entrained noble gases are excluded from this limit.

Table F-2

Station Characteristics

STATION: Braidwood

LOCATION: Braceville, Illinois

CHARACTERISTICS OF ELEVATED RELEASE POINT: Not Applicable (NA)

1) Release Height = ____m

2) Diameter = ____m

3) Exit Speed = ____ms^{-1}

4) Heat Content____Kcal s^{-1}

CHARACTERISTICS OF VENT STACK RELEASE POINT

1) Release Height = 60.66 m[a]

2) Diameter = 2.80 m

3) Exit Speed = 11.0 ms^{-1}[a]

CHARACTERISTICS OF GROUND LEVEL RELEASE

1) Release Height = 0 m

2) Building Factor (D) = 60.6 m[a]

METEOROLOGICAL DATA

A 320 ft Tower is Located 573 m NE of vent stack release point

Tower Data Used in Calculations

Release Point	Wind Speed and Direction	Differential Temperature
Elevated	(NA)	(NA)
Vent	203 ft	199-30 ft
Ground	34 ft	199-30 ft

[a] Used in calculating the meteorological and dose factors in Tables F-5, F-6, and F-7. See Sections B.3 through B.6 of Appendix B.

Table F-3

Critical Ranges

Direction	Unrestricted Area Boundary[a] (m)	Restricted Area Boundary (m)	Nearest Resident Within 6.2 miles (m)	Nearest Dairy Farm within 6.2 Miles[c] (m)
N	610	305	800	None
NNE	914	265	2800	None
NE	792	299	1100	None
ENE	701	361	1200	None
E	1036	355	1200	None
ESE	2713	425	3500	None
SE	3414	448	4300	None
SSE	3444	540	None	None
S	4633	530	6700	None
SSW	975	540	2000	None
SW	632	632	600	None
WSW	555	555	800	None
W	518	500	600	None
WNW	503	434	600	None
NW	495	428	600	None
NNW	510	442	600	None

[a] See Updated Final Safety Analysis Report Table 2.1-1a and Environmental Report. Used in calculating the meteorological and dose factors in Tables F-5 and F-7. See Sections B.3 through B.6 of Appendix B.

[b] 1998 annual survey by Teledyne Isotopes Midwest Laboratories. The distances are rounded to the nearest conservative 100 meters.

[c] 1998 annual milch animal census, by Teledyne Isotopes Midwest Laboratories. Used in calculating the D/Q values in Table F-6. The distances are rounded to the nearest conservative 100 meters.

Table F-4

Average Wind Speeds

Downwind Direction	Average Wind Speed (m/sec)[a]		
	Elevated[b]	Mixed Mode	Ground Level[b]
N	7.6	6.0	4.7
NNE	7.5	5.8	4.4
NE	6.1	5.3	3.9
ENE	6.2	5.2	3.7
E	6.6	5.4	4.0
ESE	6.8	5.6	4.3
SE	6.2	5.3	3.9
SSE	5.8	5.2	4.1
S	5.5	4.9	3.6
SSW	5.5	5.0	3.7
SW	5.3	4.8	3.3
WSW	4.7	4.2	2.4
W	5.4	4.4	2.2
WNW	6.0	4.6	2.4
NW	6.0	4.8	3.1
NNW	6.8	5.4	3.9

[a] Based on Braidwood site meteorological data, January 1978 through December 1987. Calculated in Reference 1 of Section F.2, using formulas in Section B.1.3 of Appendix B.

[b] The elevated and ground level values are provided for reference purposes only. Routine dose calculations are performed using the mixed mode values.

Table F-5
X/Q and D/Q Maxima at or Beyond the Unrestricted Area Boundary

Downwind Direction	Mixed Mode (Vent) Release				Ground Level Release		
	Radius (meters)	X/Q (sec/m**3)	Radius (meters)	D/Q (1/m**2)	Radius (meters)	X/Q (sec/m**3)	D/Q (1/m**2)
N	610.	1.161E-06	610.	1.643E-08	610.	4.646E-06	3.355E-08
NNE	914.	5.076E-07	914.	7.023E-09	914.	1.783E-06	1.382E-08
NE	792.	2.990E-07	792.	4.274E-09	792.	1.738E-06	1.092E-08
ENE	701.	4.281E-07	701.	4.903E-09	701.	2.174E-06	1.310E-08
E	1036.	3.104E-07	1036.	3.780E-09	1036.	1.505E-06	8.551E-09
ESE	2713.	1.065E-07	2713.	1.164E-09	2713.	3.990E-07	1.949E-09
SE	3414.	7.575E-08	3414.	7.225E-10	3414.	2.757E-07	1.088E-09
SSE	3444.	6.028E-08	3444.	6.345E-10	3444.	2.165E-07	1.015E-09
S	4633.	4.068E-08	4633.	2.644E-10	4633.	1.749E-07	4.520E-10
SSW	975.	1.925E-07	975.	2.843E-09	975.	1.333E-06	6.781E-09
SW	632.	5.153E-07	632.	5.408E-09	632.	3.485E-06	1.494E-08
WSW	555.	7.821E-07	555.	4.558E-09	555.	5.471E-06	1.853E-08
W	518.	8.901E-07	518.	5.064E-09	518.	5.902E-06	1.830E-08
WNW	503.	1.077E-06	503.	6.100E-09	503.	6.472E-06	1.913E-08
NW	495.	1.081E-06	495.	8.650E-09	495.	5.501E-06	2.537E-08
NNW	510.	1.098E-06	510.	1.185E-08	510.	5.421E-06	3.023E-08

Braidwood Site Meteorological Data 1/78 - 12/87

Note: Based on Reference 1 of Section F.2 and the formulas in Sections B.3 and B.4 of Appendix B.

X/Q is used for beta skin, and inhalation dose pathways. See Sections A.1.2, A.1.3, and A.1.4.2 of Apprendix A.

D/Q is used for produce and leafy vegetable pathways. Section A.1.4 of Appendix A.

The ground level release data are provided for reference purposes only. Routine dose calculations are performed using mixed mode data.

Radius is the approximate distance from the midpoint between gaseous effluent release points to the location of highest X/Q or D/Q at or beyond the unrestricted area boundary (UAB).

Table F-5a

X/Q and D/Q Maxima at or Beyond the Restricted Area Boundary

Downwind Direction	Mixed Mode (Vent) Release				Ground Level Release		
	Radius (meters)	X/Q (sec/m**3)	Radius (meters)	D/Q (1/m**2)	Radius (meters)	X/Q (sec/m**3)	D/Q (1/m**2)
N	305.	3.766E-06	305.	4.266E-08	305.	1.551E-05	9.627E-08
NNE	265.	3.841E-06	265.	3.855E-08	265.	1.445E-05	9.318E-08
NE	299.	1.412E-06	299.	1.473E-08	299.	8.827E-06	4.892E-08
ENE	361.	1.265E-06	361.	1.138E-08	361.	6.706E-06	3.652E-08
E	355.	1.669E-06	355.	1.590E-08	355.	8.978E-06	4.611E-08
ESE	425.	1.264E-06	425.	1.678E-08	425.	7.012E-06	4.132E-08
SE	448.	1.056E-06	448.	1.266E-08	448.	6.269E-06	3.177E-08
SSE	540.	5.596E-07	540.	8.639E-09	540.	3.673E-06	2.258E-08
S	530.	6.166E-07	530.	5.425E-09	530.	4.576E-06	1.745E-08
SSW	540.	4.441E-07	540.	6.000E-09	540.	3.423E-06	1.748E-08
SW	632.	5.153E-07	632.	5.408E-09	632.	3.485E-06	1.494E-08
WSW	555.	7.821E-07	555.	4.558E-09	555	5.471E-06	1.853E-08
W	500.	9.431E-07	500.	5.289E-09	500.	6.265E-06	1.932E-08
WNW	434.	1.384E-06	434.	7.394E-09	434.	8.361E-06	2.399E-08
NW	428.	1.381E-06	428.	1.050E-08	428.	7.070E-06	3.170E-08
NNW	442.	1.388E-06	442.	1.444E-08	442.	6.878E-06	3.766E-08

Braidwood Site Meteorological Data 1/78 - 12/87

Note: Based on Reference 1 of Section F.2 and the formulas in Sections B.3 and B.4 of Appendix B.

The ground level release data are provided for reference purposes only. Routine dose calculations are performed using mixed mode data.

Radius is the approximate distance from the midpoint between gaseous effluent release points to the location of highest X/Q or D/Q at or beyond the restricted area boundary (RAB).

Table F-6

D/Q at the Nearest Milk Cow and Meat Animal Locations within 5 miles

Downwind Direction	Nearest Milk Cow D/Q (1/m**2)			Nearest Meat Animal D/Q (1/m**2)		
	Radius (meters)	Mixed Release	Ground Release	Radius (meters)	Mixed Release	Ground Release
N	8000	2.694E-10	4.083E-10	4100	8.404E-10	1.347E- 09
NNE	8000	2.158E-10	3.221E-10	8000	2.158E-10	3.221E-10
NE	8000	1.333E-10	2.015E-10	1400	1.999E-09	4.252E-09
ENE	8000	1.305E-10	1.987E-10	5300	2.604E-10	4.153E-10
E	8000	1.614E-10	2.447E-10	3700	5.792E-10	9.701E-10
ESE	8000	1.962E-10	2.874E-10	3700	7.121E-10	1.134E- 09
SE	8000	1.779E-10	2.395E-10	4300	4.998E-10	7.250E-10
SSE	8000	1.591E-10	2.270E-10	6600	2.218E-10	3.226E-10
S	8000	1.074E-10	1.704E-10	8000	1.074E-10	1.704E-10
SSW	8000	1.172E-10	1.757E-10	8000	1.172E-10	1.757E-10
SW	8000	1.417E-10	1.921E-10	1900	1.341E-09	2.425E-09
WSW	8000	1.143E-10	1.943E-10	6100	1.800E-10	3.169E-10
W	8000	9.700E-11	1.724E-10	2500	6.142e-10	1.350E-09
WNW	8000	9.286E-11	1.723E-10	8000	9.286E-11	1.723E-10
NW	8000	1.255E-10	2.228E-10	8000	1.255E-10	2.228E-10
NNW	8000	1.639E-10	2.781E-10	8000	1.639E-10	2.781E-10

Braidwood Site Meteorological Data 1/78 - 12/87

Table F-7

Maximum Offsite Finite Plume Gamma Dose Factors Based on 1 cm Depth at the Unrestricted Area Boundary for Kr-83m

Downwind Direction	Unrestricted Area Bound (meters)	Mixed Mode (Vent) Release Radius (meters)	V (mrad/yr)/(uCi/sec)	VBAR (mrad/yr)/(uCi/sec)	Ground Level Release Radius (meters)	G (mrad/yr)/(uCi/sec)	GBAR (mrad/yr)/(uCi/sec)
N	610.	610.	1.455E-04	1.097E-04	610.	5.333E-04	4.021E-04
NNE	914.	914.	6.375E-05	4.807E-05	914.	2.125E-04	1.602E-04
NE	792.	792.	3.828E-05	2.886E-05	792.	2.007E-04	1.513E-04
ENE	701.	701.	5.294E-05	3.992E-05	701.	2.575E-04	1.941E-04
E	1036.	1036.	3.703E-05	2.792E-05	1036.	1.718E-04	1.295E-04
ESE	2713.	2713.	1.129E-05	8.514E-06	2713.	3.792E-05	2.859E-05
SE	3414.	3414.	7.089E-06	5.345E-06	3414.	2.141E-05	1.614E-05
SSE	3444.	3444.	6.047E-06	4.559E-06	3444.	1.798E-05	1.356E-05
S	4633.	4633.	3.224E-06	2.431E-06	4633.	9.268E-06	6.988E-06
SSW	975.	975.	2.363E-05	1.782E-05	975.	1.444E-04	1.088E-04
SW	632.	632.	5.930E-05	4.472E-05	632.	3.694E-04	2.786E-04
WSW	555.	555.	8.469E-05	6.386E-05	555.	5.942E-04	4.480E-04
W	518.	518.	9.909E-05	7.471E-05	518.	6.292E-04	4.744E-04
WNW	503.	503.	1.205E-04	9.082E-05	503.	6.653E-04	5.016E-04
NW	495.	495.	1.242E-04	9.366E-05	495.	6.066E-04	4.574E-04
NNW	510.	510.	1.322E-04	9.969E-05	510.	6.144E-04	4.633E-04

Braidwood Site Meteorological Data 1/78 - 12/87

Note: Based on Reference 1 of Section F.2 and the formulas in Sections B.5 and B.6 of Appendix B.

Routine dose calculations are performed using mixed mode (vent) release data.

Table F-7 (Continued)

Maximum Offsite Finite Plume Gamma Dose Factors Based on 1 cm Depth at the Unrestricted Area Boundary for Kr-85m

Downwind Direction	Unrestricted Area Bound (meters)	Mixed Mode (Vent) Release Radius (meters)	V (mrad/yr)/(uCi/sec)	VBAR (mrad/yr)/(uCi/sec)	Ground Level Release Radius (meters)	G (mrad/yr)/(uCi/sec)	GBAR (mrad/yr)/(uCi/sec)
N	610.	610.	9.989E-04	9.590E-04	610.	2.731E-03	2.164E-03
NNE	914.	914.	4.979E-04	4.785E-04	914.	1.222E-03	1.171E-03
NE	792.	792.	3.618E-04	3.481E-04	792.	1.173E-03	1.124E-03
ENE	701.	701.	4.452E-04	4.280E-04	701.	1.363E-03	1.305E-03
E	1036.	1036.	3.452E-04	3.320E-04	1036.	1.023E-03	9.809E-03
ESE	2713.	2713.	1.220E-04	1.174E-04	2713.	3.051E-04	2.930E-04
SE	3414.	3414.	8.179E-05	7.874E-05	3414.	1.970E-04	1.893E-04
SSE	3444.	3444.	6.958E-05	6.700E-05	3444.	1.634E-04	1.570E-04
S	4633.	4633.	4.000E-05	3.851E-05	4633.	1.051E-04	1.010E-04
SSW	975.	975.	2.413E-04	2.323E-04	975.	9.063E-04	8.688E-04
SW	632.	632.	5.199E-04	4.999E-04	632.	1.989E-03	1.905E-03
WSW	555.	555.	6.707E-04	6.444E-04	555.	3.061E-03	2.929E-03
W	518.	518.	6.908E-04	6.632E-04	518.	3.081E-03	2.947E-03
WNW	503.	503.	7.511E-04	7.204E-04	503.	3.126E-03	2.988E-03
NW	495.	495.	8.396E-04	8.059E-04	495.	2.915E-03	2.788E-03
NNW	510.	510.	9.023E-04	8.662E-04	510.	3.091E-03	2.958E-03

Braidwood Site Meteorological Data 1/78 - 12/87

Table F-7 (Continued)

Maximum Offsite Finite Plume Gamma Dose Factors Based on 1 cm Depth at the Unrestricted Area Boundary for Kr-85

Downwind	Unrestricted	Mixed Mode (Vent) Release			Ground Level Release		
Direction	Area Bound	Radius	V	VBAR	Radius	G	GBAR
	(meters)	(meters)	(mrad/yr)/(uCi/sec)		(meters)	(mrad/yr)/(uCi/sec)	
N	610.	610.	1.125E-05	1.088E-05	610.	2.986E-05	2.888E-05
NNE	914.	914.	5.661E-06	5.474E-06	914.	1.344E-05	1.300E-05
NE	792.	792.	4.192E-06	4.053E-06	792.	1.311E-05	1.268E-05
ENE	701.	701.	5.150E-06	4.980E-06	701.	1.486E-05	1.437E-05
E	1036.	1036.	4.044E-06	3.911E-06	1036.	1.145E-05	1.107E-05
ESE	2713.	2713.	1.468E-06	1.420E-06	2713.	3.702E-06	3.579E-06
SE	3414.	3414.	1.025E-06	9.911E-07	3414.	2.620E-06	2.534E-06
SSE	3444.	3444.	8.593E-07	8.310E-07	3444.	2.101E-06	2.032E-06
S	4633.	4633.	5.432E-07	5.253E-07	4633.	1.699E-06	1.643E-06
SSW	975.	975.	2.853E-06	2.759E-06	975.	1.042E-05	1.008E-05
SW	632.	632.	6.098E-06	5.897E-06	632.	2.227E-05	2.154E-05
WSW	555.	555.	7.858E-06	7.599E-06	555.	3.400E-05	3.288E-05
W	518.	518.	7.924E-06	7.663E-06	518.	3.388E-05	3.276E-05
WNW	503.	503.	8.499E-06	8.219E-06	503.	3.430E-05	3.317E-05
NW	495.	495.	9.567E-06	9.251E-06	495.	3.174E-05	3.069E-05
NNW	510.	510.	1.025E-05	9.909E-06	510.	3.393E-05	3.281E-05

Braidwood Site Meteorological Data 1/78 - 12/87

Table F-7 (Continued)

Maximum Offsite Finite Plume Gamma Dose Factors Based on 1 cm Depth at the Unrestricted Area Boundary for Kr-87

Downwind Direction	Unrestricted Area Bound (meters)	Mixed Mode (Vent) Release Radius (meters)	V (mrad/yr)/(uCi/sec)	VBAR (mrad/yr)/(uCi/sec)	Ground Level Release Radius (meters)	G (mrad/yr)/(uCi/sec)	GBAR (mrad/yr)/(uCi/sec)
N	610.	610.	3.313E-03	3.217E-03	610.	8.088E-03	7.853E-03
NNE	914.	914.	1.650E-03	1.602E-03	914.	3.649E-03	3.543E-03
NE	792.	792.	1.249E-03	1.213E-03	792.	3.373E-03	3.275E-03
ENE	701.	701.	1.516E-03	1.472E-03	701.	4.077E-03	3.958E-03
E	1036.	1036.	1.150E-04	1.117E-03	1036.	2.954E-03	2.868E-03
ESE	2713.	2713.	3.948E-04	3.834E-04	2713.	8.084E-04	7.849E-04
SE	3414.	3414.	2.559E-04	2.486E-04	3414.	4.691E-04	4.555E-04
SSE	3444.	3444.	2.231E-04	2.167E-04	3444.	4.098E-04	3.979E-04
S	4633.	4633.	1.162E-04	1.129E-04	4633.	2.055E-04	1.996E-04
SSW	975.	975.	8.253E-04	8.015E-04	975.	2.477E-03	2.405E-03
SW	632.	632.	1.758E-03	1.707E-03	632.	5.625E-03	5.462E-03
WSW	555.	555.	2.229E-03	2.165E-03	555.	8.703E-03	8.450E-03
W	518.	518.	2.276E-03	2.210E-03	518.	8.931E-03	8.671E-03
WNW	503.	503.	2.431E-03	2.360E-03	503.	9.052E-03	8.789E-03
NW	495.	495.	2.792E-03	2.711E-03	495.	8.646E-03	8.395E-03
NNW	510.	510.	2.982E-03	2.896E-03	510.	9.023E-03	8.761E-03

Braidwood Site Meteorological Data 1/78 - 12/87

Table F-7 (Continued)

Maximum Offsite Finite Plume Gamma Dose Factors Based on 1 cm Depth at the Unrestricted Area Boundary for Kr-88

Downwind Direction	Unrestricted Area Bound (meters)	Mixed Mode (Vent) Release Radius (meters)	V (mrad/yr)/(uCi/sec)	VBAR (mrad/yr)/(uCi/sec)	Ground Level Release Radius (meters)	G (mrad/yr)/(uCi/sec)	GBAR (mrad/yr)/(uCi/sec)
N	610.	610.	7.997E-03	7.772E-03	610.	1.968E-02	1.911E-02
NNE	914.	914.	4.019E-03	3.906E-03	914.	8.899E-03	8.644E-03
NE	792.	792.	3.059E-03	2.974E-03	792.	8.441E-03	8.199E-03
ENE	701.	701.	3.725E-03	3.621E-03	701.	9.870E-03	9.586E-03
E	1036.	1036.	2.878E-03	2.798E-03	1036.	7.394E-03	7.182E-03
ESE	2713.	2713.	1.022E-03	9.941E-04	2713.	2.215E-03	2.152E-03
SE	3414.	3414.	6.859E-04	6.670E-04	3414.	1.396E-03	1.357E-03
SSE	3444.	3444.	5.929E-04	5.766E-04	3444.	1.185E-03	1.151E-03
S	4633.	4633.	3.301E-04	3.210E-04	4633.	6.987E-04	6.792E-04
SSW	975.	975.	2.066E-03	2.009E-03	975.	6.466E-03	6.281E-03
SW	632.	632.	4.389E-03	4.267E-03	632.	1.422E-02	1.381E-02
WSW	555.	555.	5.589E-03	5.433E-03	555.	2.182E-02	2.119E-02
W	518.	518.	5.607E-03	5.449E-03	518.	2.205E-02	2.141E-02
WNW	503.	503.	5.947E-03	5.779E-03	503.	2.232E-02	2.167E-02
NW	495.	495.	6.814E-03	6.622E-03	495.	2.097E-02	2.036E-02
NNW	510.	510.	7.265E-03	7.060E-03	510.	2.215E-02	2.151E-02

Braidwood Site Meteorological Data 1/78 - 12/87

Table F-7 (Continued)

Maximum Offsite Finite Plume Gamma Dose Factors Based on 1 cm Depth at the Unrestricted Area Boundary for Kr-89

Downwind Direction	Unrestricted Area Bound (meters)	Mixed Mode (Vent) Release Radius (meters)	V (mrad/yr)/(uCi/sec)	VBAR (mrad/yr)/(uCi/sec)	Ground Level Release Radius (meters)	G (mrad/yr)/(uCi/sec)	GBAR (mrad/yr)/(uCi/sec)
N	610.	610.	4.323E-03	4.199E-03	610.	7.655E-03	7.435E-03
NNE	914.	914.	1.692E-03	1.643E-03	914.	2.645E-03	2.569E-03
NE	792.	792.	1.305E-03	1.268E-03	792.	2.219E-03	2.155E-03
ENE	701.	701.	1.577E-03	1.532E-03	701.	3.016E-03	2.929E-03
E	1036.	1036.	9.092E-04	8.833E-04	1036.	1.387E-03	1.347E-03
ESE	2713.	2713.	1.140E-04	1.108E-04	2713.	9.720E-05	9.442E-05
SE	3414.	3414.	4.392E-05	4.266E-05	3414.	2.983E-05	2.897E-05
SSE	3444.	3444.	3.822E-05	3.712E-05	3444.	3.079E-05	2.990E-05
S	4633.	4633.	9.027E-06	8.769E-06	4633.	6.198E-06	6.021E-06
SSW	975.	975.	6.764E-04	6.571E-04	975.	1.066E-03	1.036E-03
SW	632.	632.	1.750E-03	1.700E-03	632.	3.181E-03	3.089E-03
WSW	555.	555.	2.009E-03	1.951E-03	555.	4.608E-03	4.475E-03
W	518.	518.	2.170E-03	2.108E-03	518.	4.949E-03	4.807E-03
WNW	503.	503.	2.410E-03	2.341E-03	503.	5.589E-03	5.428E-03
NW	495.	495.	3.227E-03	3.134E-03	495.	7.228E-03	7.020E-03
NNW	510.	510.	3.714E-03	3.608E-03	510.	7.735E-03	7.512E-03

Braidwood Site Meteorological Data 1/78 - 12/87

Table F-7 (Continued)

Maximum Offsite Finite Plume Gamma Dose Factors Based on 1 cm Depth at the Unrestricted Area Boundary for Kr-90

Downwind Direction	Unrestricted Area Bound (meters)	Mixed Mode (Vent) Release Radius (meters)	V (mrad/yr)/(uCi/sec)	VBAR (mrad/yr)/(uCi/sec)	Ground Level Release Radius (meters)	G (mrad/yr)/(uCi/sec)	GBAR (mrad/yr)/(uCi/sec)
N	610.	610.	8.576E-04	8.317E-04	610.	9.142E-04	8.863E-04
NNE	914.	914.	1.453E-04	1.409E-04	914.	1.212E-04	1.175E-04
NE	792.	792.	1.302E-04	1.263E-04	792.	1.132E-04	1.098E-04
ENE	701.	701.	1.874E-04	1.817E-04	701.	1.634E-04	1.584E-04
E	1036.	1036.	5.480E-05	5.316E-05	1036.	3.996E-05	3.875E-05
ESE	2713.	2713.	2.691E-07	2.610E-07	2713.	1.795E-07	1.741E-07
SE	3414.	3414.	1.662E-08	1.612E-08	3414.	6.748E-09	6.546E-09
SSE	3444.	3444.	2.647E-08	2.568E-08	3444.	2.033E-08	1.972E-08
S	4633.	4633.	5.354E-10	5.193E-10	4633.	3.704E-10	3.592E-10
SSW	975.	975.	4.411E-05	4.278E-05	975.	3.803E-05	3.688E-05
SW	632.	632.	2.254E-04	2.186E-04	632.	1.980E-04	1.920E-04
WSW	555.	555.	2.280E-04	2.212E-04	555.	1.855E-04	1.799E-04
W	518.	518.	2.822E-04	2.738E-04	518.	1.673E-04	1.622E-04
WNW	503.	503.	3.444E-04	3.341E-04	503.	2.412E-04	2.339E-04
NW	495.	495.	5.611E-04	5.442E-04	495.	5.535E-04	5.366E-04
NNW	510.	510.	8.014E-04	7.772E-04	510.	9.221E-04	8.940E-04

Braidwood Site Meteorological Data 1/78 - 12/87

Table F-7 (Continued)

Maximum Offsite Finite Plume Gamma Dose Factors Based on 1 cm Depth at the Unrestricted Area Boundary for Xe-131m

Downwind	Unrestricted	Mixed Mode (Vent) Release			Ground Level Release		
Direction	Area Bound	Radius	V	VBAR	Radius	G	GBAR
	(meters)	(meters)	(mrad/yr)/(uCi/sec)		(meters)	(mrad/yr)/(Uci/sec)	
N	610.	610.	1.355E-04	1.065E-04	610.	4.922E-04	3.831E-04
NNE	914.	914.	6.125E-05	4.839E-05	914.	1.988E-04	1.553E-04
NE	792.	792.	3.806E-05	3.031E-05	792.	1.946E-04	1.520E-04
ENE	701.	701.	5.153E-05	4.083E-05	701.	2.358E-04	1.838E-04
E	1036.	1036.	3.805E-05	3.024E-05	1036.	1.677E-04	1.310E-04
ESE	2713.	2713.	1.232E-05	9.849E-06	2713.	4.412E-05	3.474E-05
SE	3414.	3414.	8.612E-06	6.883E-06	3414.	3.046E-05	2.401E-05
SSE	3444.	3444.	6.862E-06	5.499E-06	3444.	2.387E-05	1.883E-05
S	4633.	4633.	4.603E-06	3.676E-16	4633.	1.914E-05	1.510E-05
SSW	975.	975.	2.441E-05	1.949E-05	975.	1.504E-04	1.176E-04
SW	632.	632.	6.073E-05	4.813E-05	632.	3.620E-04	2.819E-04
WSW	555.	555.	8.569E-05	6.762E-05	555.	5.701E-04	4.435E-04
W	518.	518.	9.576E-05	7.527E-05	518.	5.874E-04	4.565E-04
WNW	503.	503.	1.132E-04	8.870E-05	503.	6.171E-04	4.790E-04
NW	495.	495.	1.167E-04	9.171E-05	495.	5.515E-04	4.285E-04
NNW	510.	510.	1.244E-04	9.777E-05	510.	5.698E-04	4.432E-04

Braidwood Site Meteorological Data 1/78 - 12/87

Table F-7 (Continued)

Maximum Offsite Finite Plume Gamma Dose Factors Based on 1 cm Depth at the Unrestricted Area Boundary for Xe-133m

Downwind Direction	Unrestricted Area Bound (meters)	Mixed Mode (Vent) Release Radius (meters)	V (mrad/yr)/(uCi/sec)	VBAR (mrad/yr)/(uCi/sec)	Ground Level Release Radius (meters)	G (mrad/yr)/(uCi/sec)	GBAR (mrad/yr)/(uCi/sec)
N	610.	610.	2.561E-04	2.223E-04	610.	8.256E-04	7.023E-04
NNE	914.	914.	1.216E-04	1.063E-04	914.	3.481E-04	2.984E-04
NE	792.	792.	8.185E-05	7.244E-05	792.	3.399E-04	2.912E-04
ENE	701.	701.	1.055E-04	9.274E-05	701.	4.017E-04	3.426E-04
E	1036.	1036.	8.032E-05	7.091E-05	1036.	2.943E-04	2.524E-04
ESE	2713.	2713.	2.749E-05	2.446E-05	2713.	8.394E-05	7.303E-05
SE	3414.	3414.	1.908E-05	1.697E-05	3414.	5.806E-05	5.060E-05
SSE	3444.	3444.	1.562E-05	1.394E-05	3444.	4.609E-05	4.022E-05
S	4633.	4633.	1.005E-05	8.929E-06	4633.	3.632E-05	3.171E-05
SSW	975.	975.	5.390E-05	4.788E-05	975.	2.651E-04	2.276E-04
SW	632.	632.	1.243E-04	1.092E-04	632.	6.091E-04	5.186E-04
WSW	555.	555.	1.679E-04	1.466E-04	555.	9.488E-04	8.060E-04
W	518.	518.	1.799E-04	1.560E-04	518.	9.658E-04	8.185E-04
WNW	503.	503.	2.046E-04	1.763E-04	503.	1.001E-03	8.459E-04
NW	495.	495.	2.185E-04	1.894E-04	495.	9.067E-04	7.683E-04
NNW	510.	510.	2.337E-04	2.027E-04	510.	9.487E-04	8.059E-04

Braidwood Site Meteorological Data 1/78 - 12/87

Table F-7 (Continued)

Maximum Offsite Finite Plume Gamma Dose Factors Based on 1 cm Depth at the Unrestricted Area Boundary for Xe-133

Downwind	Unrestricted	Mixed Mode (Vent) Release			Ground Level Release		
Direction	Area Bound	Radius	V	VBAR	Radius	G	GBAR
	(meters)	(meters)	(mrad/yr)/(uCi/sec)		(meters)	(mrad/yr)/(uCi/sec)	
N	610.	610.	2.824E-04	2.536E-04	610.	9.100E-04	8.050E-04
NNE	914.	914.	1.355E-04	1.224E-04	914.	3.891E-04	3.466E-04
NE	792.	792.	9.079E-05	8.273E-05	792.	3.804E-04	3.389E-04
ENE	701.	701.	1.161E-04	1.052E-04	701.	4.450E-04	3.946E-04
E	1036.	1036.	8.914E-05	8.108E-05	1036.	3.295E-04	2.937E-04
ESE	2713.	2713.	3.072E-05	2.812E-05	2713.	9.583E-05	8.640E-05
SE	3414.	3414.	2.135E-05	1.953E-05	3414.	6.660E-05	6.011E-05
SSE	3444.	3444.	1.740E-05	1.596E-05	3444.	5.275E-05	4.767E-05
S	4633.	4633.	1.130E-05	1.033E-05	4633.	4.215E-05	3.809E-05
SSW	975.	975.	5.975E-05	5.460E-05	975.	2.978E-04	2.657E-04
SW	632.	632.	1.367E-04	1.238E-04	632.	6.726E-04	5.954E-04
WSW	555.	555.	1.830E-04	1.649E-04	555.	1.044E-03	9.224E-04
W	518.	518.	1.965E-04	1.762E-04	518.	1.056E-03	9.311E-04
WNW	503.	503.	2.231E-04	1.990E-04	503.	1.088E-03	9.570E-04
NW	495.	495.	2.383E-04	2.135E-04	495.	9.911E-04	8.736E-04
NNW	510.	510.	2.563E-04	2.299E-04	510.	1.044E-03	9.221E-04

Braidwood Site Meteorological Data 1/78 - 12/87

Table F-7 (Continued)

Maximum Offsite Finite Plume Gamma Dose Factors Based on 1 cm Depth at the Unrestricted Area Boundary for Xe-135m

Downwind Direction	Unrestricted Area Bound (meters)	Mixed Mode (Vent) Release Radius (meters)	V (mrad/yr)/(uCi/sec)	VBAR (mrad/yr)/(uCi/sec)	Ground Level Release Radius (meters)	G (mrad/yr)/(uCi/sec)	GBAR (mrad/yr)/(uCi/sec)
N	610.	610.	1.924E-03	1.856E-03	610.	4.403E-03	4.240E-03
NNE	914.	914.	9.071E-04	8.750E-04	914.	1.913E-03	1.843E-03
NE	792.	792.	6.745E-04	6.509E-04	792.	1.628E-03	1.568E-03
ENE	701.	701.	8.149E-04	7.862E-04	701.	2.191E-03	2.110E-03
E	1036.	1036.	5.710E-04	5.510E-04	1036.	1.368E-03	1.319E-03
ESE	2713.	2713.	1.557E-04	1.503E-04	2713.	2.479E-04	2.391E-04
SE	3414.	3414.	8.843E-05	8.536E-05	3414.	1.163E-04	1.122E-04
SSE	3444.	3444.	7.741E-05	7.472E-05	3444.	1.062E-04	1.025E-04
S	4633.	4633.	3.277E-05	3.163E-05	4633.	4.020E-05	3.879E-05
SSW	975.	975.	4.100E-04	3.957E-04	975.	1.011E-03	9.747E-04
SW	632.	632.	8.898E-04	8.587E-04	632.	2.532E-03	2.439E-03
WSW	555.	555.	1.092E-03	1.054E-03	555.	3.989E-03	3.842E-03
W	518.	518.	1.187E-03	1.145E-03	518.	4.362E-03	4.200E-03
WNW	503.	503.	1.304E-03	1.258E-03	503.	4.495E-03	4.327E-03
NW	495.	495.	1.546E-03	1.490E-03	495.	4.695E-03	4.521E-03
NNW	510.	510.	1.673E-03	1.613E-03	510.	4.688E-03	4.514E-03

Braidwood Site Meteorological Data 1/78 - 12/87

Table F-7 (Continued)

Maximum Offsite Finite Plume Gamma Dose Factors Based on 1 cm Depth at the Unrestricted Area Boundary for Xe-135

Downwind	Unrestricted	Mixed Mode (Vent) Release			Ground Level Release		
Direction	Area Bound	Radius	V	VBAR	Radius	G	GBAR
	(meters)	(meters)	(mrad/yr)/(uCi/sec)		(meters)	(mrad/yr)/(uCi/sec)	
N	610.	610.	1.353E-03	1.307E-03	610.	3.674E-03	3.548E-03
NNE	914.	914.	6.781E-04	6.554E-04	914.	1.652E-03	1.596E-03
NE	792.	792.	4.952E-04	4.788E-04	792.	1.599E-03	1.545E-03
ENE	701.	701.	6.084E-04	5.880E-04	701.	1.833E-03	1.770E-03
E	1036.	1036.	4.753E-04	4.595E-04	1036.	1.395E-03	1.348E-03
ESE	2713.	2713.	1.700E-04	1.644E-04	2713.	4.326E-04	4.181E-04
SE	3414.	3414.	1.160E-04	1.121E-04	3414.	2.914E-04	2.816E-04
SSE	3444.	3444.	9.782E-05	9.459E-05	3444.	2.377E-04	2.297E-04
S	4633.	4633.	5.868E-05	5.674E-05	4633.	1.698E-04	1.641E-04
SSW	975.	975.	3.328E-04	3.217E-04	975.	1.253E-03	1.211E-03
SW	632.	632.	7.144E-04	6.906E-04	632.	2.708E-03	2.615E-03
WSW	555.	555.	9.205E-04	8.896E-04	555.	4.150E-03	4.007E-03
W	518.	518.	9.408E-04	9.091E-04	518.	4.151E-03	4.008E-03
WNW	503.	503.	1.018E-03	9.833E-04	503.	4.203E-03	4.058E-03
NW	495.	495.	1.139E-03	1.101E-03	495.	3.908E-03	3.773E-03
NNW	510.	510.	1.225E-03	1.183E-03	510.	4.166E-03	4.022E-03

Braidwood Site Meteorological Data 1/78 - 12/87

Table F-7 (Continued)

Maximum Offsite Finite Plume Gamma Dose Factors Based on 1 cm Depth at the Unrestricted Area Boundary for Xe-137

Downwind Direction	Unrestricted Area Bound (meters)	Mixed Mode (Vent) Release Radius (meters)	V (mrad/yr)/(uCi/sec)	VBAR (mrad/yr)/(uCi/sec)	Ground Level Release Radius (meters)	G (mrad/yr)/(uCi/sec)	GBAR (mrad/yr)/(uCi/sec)
N	610.	610.	6.360E-04	6.154E-04	610.	1.202E-03	1.164E-03
NNE	914.	914.	2.578E-04	2.494E-04	914.	4.345E-04	4.205E-04
NE	792.	792.	1.950E-04	1.887E-04	792.	3.640E-04	3.522E-04
ENE	701.	701.	2.355E-04	2.279E-04	701.	4.977E-04	4.816E-04
E	1036.	1036.	1.407E-04	1.361E-04	1036.	2.400E-04	2.322E-04
ESE	2713.	2713.	2.042E-05	1.976E-05	2713.	1.931E-05	1.868E-05
SE	3414.	3414.	8.468E-06	8.195E-06	3414.	6.393E-06	6.186E-06
SSE	3444.	3444.	7.384E-06	7.146E-06	3444.	6.474E-06	6.265E-06
S	4633.	4633.	1.951E-06	1.888E-06	4633.	1.457E-06	1.410E-06
SSW	975.	975.	1.038E-04	1.004E-04	975.	1.812E-04	1.753E-04
SW	632.	632.	2.577E-04	2.493E-04	632.	5.246E-04	5.076E-04
WSW	555.	555.	2.977E-04	2.881E-04	555.	7.771E-04	7.519E-04
W	518.	518.	3.247E-04	3.143E-04	518.	8.444E-04	8.170E-04
WNW	503.	503.	3.635E-04	3.517E-04	503.	9.371E-04	9.067E-04
NW	495.	495.	4.769E-04	4.615E-04	495.	1.167E-03	1.129E-03
NNW	510.	510.	5.441E-04	5.265E-04	510.	1.222E-03	1.182E-03

Braidwood Site Meteorological Data 1/78 - 12/87

Table F-7 (Continued)

Maximum Offsite Finite Plume Gamma Dose Factors Based on 1 cm Depth at the Unrestricted Area Boundary for Xe-138

Downwind Direction	Unrestricted Area Bound (meters)	Mixed Mode (Vent) Release Radius (meters)	V (mrad/yr)/(uCi/sec)	VBAR (mrad/yr)/(uCi/sec)	Ground Level Release Radius (meters)	G (mrad/yr)/(uCi/sec)	GBAR (mrad/yr)/(uCi/sec)
N	610.	610.	4.201E-03	4.079E-03	610.	9.169E-03	8.898E-03
NNE	914.	914.	1.982E-03	1.925E-03	914.	3.986E-03	3.869E-03
NE	792.	792.	1.504E-03	1.460E-03	792.	3.379E-03	3.280E-03
ENE	701.	701.	1.805E-03	1.753E-03	701.	4.549E-03	4.415E-03
E	1036.	1036.	1.262E-03	1.225E-03	1036.	2.830E-03	2.747E-03
ESE	2713.	2713.	3.395E-04	3.297E-04	2713.	5.079E-04	4.931E-04
SE	3414.	3414.	1.926E-04	1.871E-04	3414.	2.381E-04	2.312E-04
SSE	3444.	3444.	1.685E-04	1.636E-04	3444.	2.185E-04	2.121E-04
S	4633.	4633.	7.045E-05	6.842E-05	4633.	8.174E-05	7.937E-05
SSW	975.	975.	9.144E-04	8.880E-04	975.	2.091E-03	2.030E-03
SW	632.	632.	1.991E-03	1.934E-03	632.	5.266E-03	5.072E-03
WSW	555.	555.	2.429E-03	2.359E-03	555.	8.199E-03	7.957E-03
W	518.	518.	2.609E-03	2.534E-03	518.	8.973E-03	8.708E-03
WNW	503.	503.	2.834E-03	2.751E-03	503.	9.247E-03	8.973E-03
NW	495.	495.	3.387E-03	3.288E-03	495.	9.733E-03	9.445E-03
NNW	510.	510.	3.657E-03	3.551E-03	510.	9.712E-03	9.425E-03

Braidwood Site Meteorological Data 1/78 - 12/87

Table F-7 (Continued)

Maximum Offsite Finite Plume Gamma Dose Factors Based on 1 cm Depth at the Unrestricted Area Boundary for Ar-41

Downwind Direction	Unrestricted Area Bound (meters)	Mixed Mode (Vent) Release Radius (meters)	V (mrad/yr)/(uCi/sec)	VBAR (mrad/yr)/(uCi/sec)	Ground Level Release Radius (meters)	G (mrad/yr)/(uCi/sec)	GBAR (mrad/yr)/(uCi/sec)
N	610.	610.	5.141E-03	4.977E-03	610.	1.283E-02	1.242E-02
NNE	914.	914.	2.568E-03	2.485E-03	914.	5.780E-03	5.595E-03
NE	792.	792.	1.935E-03	1.873E-03	792.	5.421E-03	5.248E-03
ENE	701.	701.	2.357E-03	2.282E-03	701.	6.445E-03	6.239E-03
E	1036.	1036.	1.803E-03	1.746E-03	1036.	4.745E-03	4.593E-03
ESE	2713.	2713.	6.281E-04	6.080E-04	2713.	1.352E-03	1.309E-03
SE	3414.	3414.	4.128E-04	3.996E-04	3414.	8.140E-04	7.880E-04
SSE	3444.	3444.	3.580E-04	3.466E-04	3444.	7.007E-04	6.783E-04
S	4633.	4633.	1.924E-04	1.862E-04	4633.	3.770E-04	3.650E-04
SSW	975.	975.	1.289E-03	1.247E-03	975.	4.067E-03	3.937E-03
SW	632.	632.	1.991E-03	1.934E-03	632.	9.104E-03	8.813E-03
WSW	555.	555.	2.429E-03	2.359E-03	555.	1.404E-02	1.359E-02
W	518.	518.	3.562E-03	3.448E-03	518.	1.430E-02	1.384E-02
WNW	503.	503.	3.806E-03	3.685E-03	503.	1.449E-02	1.403E-02
NW	495.	495.	4.350E-03	4.211E-03	495.	1.371E-02	1.327E-02
NNW	510.	510.	4.647E-03	4.498E-03	510.	1.439E-02	1.393E-02

Braidwood Site Meteorological Data 1/78 - 12/87

Table F-7a

Maximum Offsite Finite Plume Gamma Dose Factors Based on 1 cm Depth at the Restricted Area Boundary for Kr-83m

Downwind Direction	Restricted Area Bound (meters)	Mixed Mode (Vent) Release Radius (meters)	V (mrad/yr)/(uCi/sec)	VBAR (mrad/yr)/(uCi/sec)	Ground Level Release Radius (meters)	G (mrad/yr)/(uCi/sec)	GBAR (mrad/yr)/(uCi/sec)
N	305.	305.	3.994E-04	3.012E-04	305.	1.521E-03	1.147E-03
NNE	265.	265.	3.883E-04	2.928E-04	265.	1.406E-03	1.060E-03
NE	299.	299.	1.555E-04	1.173E-04	299.	9.211E-04	6.945E-04
ENE	361.	361.	1.372E-04	1.034E-04	361.	7.062E-04	5.325E-04
E	355.	355.	1.785E-04	1.346E-04	355.	9.139E-04	6.891E-04
ESE	425.	425.	1.505E-04	1.135E-04	425.	7.634E-04	5.756E-04
SE	448.	448.	1.196E-04	9.017E-05	448.	6.583E-04	4.964E-04
SSE	540.	540.	6.996E-05	5.275E-05	540.	4.053E-04	3.056E-04
S	530.	530.	6.499E-05	4.900E-05	530.	4.639E-04	3.498E-04
SSW	540.	540.	5.532E-05	4.171E-05	540.	3.829E-04	2.887E-04
SW	632.	632.	5.930E-05	4.472E-05	632.	3.694E-04	2.786E-04
WSW	555.	555.	8.469E-05	6.386E-05	555.	5.942E-04	4.480E-04
W	500.	500.	1.045E-04	7.876E-05	500.	6.646E-04	5.011E-04
WNW	434.	434.	1.497E-04	1.129E-04	434.	8.320E-04	6.273E-04
NW	428.	428.	1.537E-04	1.159E-04	428.	7.562E-04	5.702E-04
NNW	442.	442.	1.633E-04	1.231E-04	442.	7.667E-04	5.781E-04

Braidwood Site Meteorological Data 1/78 - 12/87

Note: Based on Reference 1 of Section F.2 and the formulas in Sections B.5 and B.6 of Appendix B.

Routine dose calculations are performed using mixed mode release data.

Table F-7a (Continued)

Maximum Offsite Finite Plume Gamma Dose Factors Based on 1 cm Depth at the Restricted Area Boundary for Kr-85m

Downwind Direction	Restricted Area Bound (meters)	Mixed Mode (Vent) Release Radius (meters)	V (mrad/yr)/(uCi/sec)	VBAR (mrad/yr)/(uCi/sec)	Ground Level Release Radius (meters)	G (mrad/yr)/(uCi/sec)	GBAR (mrad/yr)/(uCi/sec)
N	305.	305.	2.263E-03	2.169E-03	305.	6.552E-03	6.259E-03
NNE	265.	265.	2.146E-03	2.056E-03	265.	5.928E-03	5.662E-03
NE	299.	299.	1.094E-03	1.050E-03	299.	4.111E-03	3.928E-03
ENE	361.	361.	9.475E-04	9.097E-04	361.	3.165E-03	3.025E-03
E	355.	355.	1.197E-03	1.149E-03	355.	4.072E-03	3.891E-03
ESE	425.	425.	1.073E-03	1.031E-03	425.	3.584E-03	3.427E-03
SE	448.	448.	9.074E-04	8.718E-04	448.	3.167E-03	3.029E-03
SSE	540.	540.	6.068E-04	5.836E-04	540.	2.086E-03	1.997E-03
S	530.	530.	5.227E-04	5.023E-04	530.	2.351E-03	2.249E-03
SSW	540.	540.	4.797E-04	4.613E-04	540.	1.999E-03	1.913E-03
SW	632.	632.	5.199E-04	4.999E-04	632.	1.989E-03	1.905E-03
WSW	555.	555.	6.707E-04	6.444E-04	555.	3.061E-03	2.929E-03
W	500.	500.	7.204E-04	6.915E-04	500.	3.224E-03	3.083E-03
WNW	434.	434.	8.947E-04	8.578E-04	434.	3.764E-03	3.597E-03
NW	428.	428.	9.954E-04	9.552E-04	428.	3.505E-03	3.351E-03
NNW	442.	442.	1.068E-03	1.025E-03	442.	3.712E-03	3.551E-03

Braidwood Site Meteorological Data 1/78 - 12/87

Table F-7a (Continued)

Maximum Offsite Finite Plume Gamma Dose Factors Based on 1 cm Depth at the Restricted Area Boundary for Kr-85

Downwind Direction	Restricted Area Bound (meters)	Mixed Mode (Vent) Release Radius (meters)	V (mrad/yr)/(uCi/sec)	VBAR (mrad/yr)/(uCi/sec)	Ground Level Release Radius (meters)	G (mrad/yr)/(uCi/sec)	GBAR (mrad/yr)/(uCi/sec)
N	305.	305.	2.521E-05	2.437E-05	305.	7.053E-05	6.820E-05
NNE	265.	265.	2.389E-05	2.310E-05	265.	6.351E-05	6.141E-05
NE	299.	299.	1.248E-05	1.207E-05	299.	4.443E-05	4.296E-05
ENE	361.	361.	1.083E-05	1.047E-05	361.	3.404E-05	3.292E-05
E	355.	355.	1.366E-05	1.320E-05	355.	4.396E-05	4.251E-05
ESE	425.	425.	1.220E-05	1.180E-05	425.	3.889E-05	3.760E-05
SE	448.	448.	1.042E-05	1.008E-05	448.	3.470E-05	3.355E-05
SSE	540.	540.	7.029E-06	6.797E-06	540.	2.290E-05	2.215E-05
S	530.	530.	6.111E-06	5.909E-06	530.	2.632E-05	2.545E-05
SSW	540.	540.	5.594E-06	5.409E-06	540.	2.217E-05	2.144E-05
SW	632.	632.	6.098E-06	5.897E-06	632.	2.227E-05	2.154E-05
WSW	555.	555.	7.858E-06	7.599E-06	555.	3.400E-05	3.288E-05
W	500.	500.	8.255E-06	7.983E-06	500.	3.541E-05	3.424E-05
WNW	434.	434.	1.009E-05	9.757E-06	434.	4.111E-05	3.976E-05
NW	428.	428.	1.131E-05	1.093E-05	428.	3.802E-05	3.677E-05
NNW	442.	442.	1.209E-05	1.169E-05	442.	4.056E-05	3.922E-05

Braidwood Site Meteorological Data 1/78 - 12/87

Table F-7a (Continued)

Maximum Offsite Finite Plume Gamma Dose Factors Based on 1 cm Depth at the Restricted Area Boundary for Kr-87

Downwind Direction	Restricted Area Bound (meters)	Mixed Mode (Vent) Release Radius (meters)	V (mrad/yr)/(uCi/sec)	VBAR (mrad/yr)/(uCi/sec)	Ground Level Release Radius (meters)	G (mrad/yr)/(uCi/sec)	GBAR (mrad/yr)/(uCi/sec)
N	305.	305.	7.480E-03	7.264E-03	305.	1.972E-02	1.915E-02
NNE	265.	265.	7.100E-03	6.895E-03	265.	1.802E-02	1.749E-02
NE	299.	299.	3.780E-03	3.671E-03	299.	1.225E-02	1.189E-02
ENE	361.	361.	3.246E-03	3.152E-03	361.	9.572E-03	9.294E-03
E	355.	355.	4.060E-03	3.943E-03	355.	1.220E-02	1.185E-02
ESE	425.	425.	3.644E-03	3.539E-03	425.	1.068E-02	1.037E-02
SE	448.	448.	3.081E-03	2.992E-03	448.	9.262E-03	8.992E-03
SSE	540.	540.	2.111E-03	2.050E-03	540.	6.149E-03	5.971E-03
S	530.	530.	1.762E-03	1.711E-03	530.	6.549E-03	6.359E-03
SSW	540.	540.	1.664E-03	1.616E-03	540.	5.727E-03	5.561E-03
SW	632.	632.	1.758E-03	1.707E-03	632.	5.625E-03	5.462E-03
WSW	555.	555.	2.229E-03	2.165E-03	555.	8.703E-03	8.450E-03
W	500.	500.	2.375E-03	2.306E-03	500.	9.363E-03	9.090E-03
WNW	434.	434.	2.903E-03	2.818E-03	434.	1.098E-02	1.066E-02
NW	428.	428.	3.315E-03	3.219E-03	428.	1.044E-02	1.014E-02
NNW	442.	442.	3.533E-03	3.431E-03	442.	1.090E-02	1.058E-02

Braidwood Site Meteorological Data 1/78 - 12/87

Table F-7a (Continued)

Maximum Offsite Finite Plume Gamma Dose Factors Based on 1 cm Depth at the Restricted Area Boundary for Kr-88

Downwind Direction	Restricted Area Bound (meters)	Mixed Mode (Vent) Release Radius (meters)	V (mrad/yr)/(uCi/sec)	VBAR (mrad/yr)/(uCi/sec)	Ground Level Release Radius (meters)	G (mrad/yr)/(uCi/sec)	GBAR (mrad/yr)/(uCi/sec)
N	305.	305.	1.790E-02	1.739E-02	305.	4.712E-02	4.574E-02
NNE	265.	265.	1.698E-02	1.650E-02	265.	4.272E-02	4.146E-02
NE	299.	299.	9.121E-03	8.865E-03	299.	2.947E-02	2.861E-02
ENE	361.	361.	7.868E-03	7.647E-03	361.	2.281E-02	2.214E-02
E	355.	355.	9.873E-03	9.595E-03	355.	2.928E-02	2.842E-02
ESE	425.	425.	8.818E-03	8.571E-03	425.	2.578E-02	2.503E-02
SE	448.	448.	7.516E-03	7.306E-03	448.	2.271E-02	2.205E-02
SSE	540.	540.	5.155E-03	5.012E-03	540.	1.505E-02	1.462E-02
S	530.	530.	4.382E-03	4.260E-03	530.	1.666E-02	1.618E-02
SSW	540.	540.	4.092E-03	3.978E-03	540.	1.429E-02	1.388E-02
SW	632.	632.	4.389E-03	4.267E-03	632.	1.422E-02	1.381E-02
WSW	555.	555.	5.589E-03	5.433E-03	555.	2.182E-02	2.119E-02
W	500.	500.	5.844E-03	5.680E-03	500.	2.308E-02	2.241E-02
WNW	434.	434.	7.074E-03	6.873E-03	434.	2.690E-02	2.612E-02
NW	428.	428.	8.064E-03	7.837E-03	428.	2.520E-02	2.447E-02
NNW	442.	442.	8.580E-03	8.338E-03	442.	2.660E-02	2.583E-02

Braidwood Site Meteorological Data 1/78 - 12/87

Table F-7a (Continued)

Maximum Offsite Finite Plume Gamma Dose Factors Based on 1 cm Depth at the Restricted Area Boundary for Kr-89

Downwind Direction	Restricted Area Bound (meters)	Mixed Mode (Vent) Release Radius (meters)	V (mrad/yr)/(uCi/sec)	VBAR (mrad/yr)/(uCi/sec)	Ground Level Release Radius (meters)	G (mrad/yr)/(uCi/sec)	GBAR (mrad/yr)/(uCi/sec)
N	305.	305.	1.243E-02	1.208E-02	305.	2.613E-02	2.538E-02
NNE	265.	265.	1.213E-02	1.178E-02	265.	2.655E-02	2.579E-02
NE	299.	299.	6.070E-03	5.896E-03	299.	1.438E-02	1.397E-02
ENE	361.	361.	4.638E-03	4.506E-03	361.	1.132E-02	1.099E-02
E	355.	355.	5.715E-03	5.551E-03	355.	1.360E-02	1.321E-02
ESE	425.	425.	5.133E-03	4.986E-03	425.	1.084E-02	1.053E-02
SE	448.	448.	4.043E-03	3.927E-03	448.	8.014E-03	7.784E-03
SSE	540.	540.	2.636E-03	2.561E-03	540.	5.137E-03	4.990E-03
S	530.	530.	1.936E-03	1.880E-03	530.	4.055E-03	3.938E-03
SSW	540.	540.	1.970E-03	1.914E-03	540.	4.039E-03	3.922E-03
SW	632.	632.	1.750E-03	1.700E-03	632.	3.181E-03	3.089E-03
WSW	555.	555.	2.009E-03	1.951E-03	555.	4.608E-03	4.475E-03
W	500.	500.	2.313E-03	2.247E-03	500.	5.385E-03	5.230E-03
WNW	434.	434.	3.129E-03	3.040E-03	434.	7.749E-03	7.526E-03
NW	428.	428.	4.110E-03	3.993E-03	428.	9.703E-03	9.424E-03
NNW	442.	442.	4.671E-03	4.537E-03	442.	1.017E-02	9.878E-03

Braidwood Site Meteorological Data 1/78 - 12/87

Table F-7a (Continued)

Maximum Offsite Finite Plume Gamma Dose Factors Based on 1 cm Depth at the Restricted Area Boundary for Kr-90

Downwind Direction	Restricted Area Bound (meters)	Mixed Mode (Vent) Release Radius (meters)	V (mrad/yr)/(uCi/sec)	VBAR (mrad/yr)/(uCi/sec)	Ground Level Release Radius (meters)	G (mrad/yr)/(uCi/sec)	GBAR (mrad/yr)/(uCi/sec)
N	305.	305.	5.688E-03	5.515E-03	305.	8.218E-03	7.966E-03
NNE	265.	265.	6.051E-03	5.868E-03	265.	9.375E-03	9.087E-03
NE	299.	299.	2.447E-03	2.374E-03	299.	3.836E-03	3.719E-03
ENE	361.	361.	1.410E-03	1.367E-03	361.	1.941E-03	1.882E-03
E	355.	355.	1.896E-03	1.839E-03	355.	2.575E-03	2.496E-03
ESE	425.	425.	1.516E-03	1.470E-03	425.	1.818E-03	1.762E-03
SE	448.	448.	1.032E-03	1.001E-03	448.	1.147E-03	1.112E-03
SSE	540.	540.	5.186E-04	5.030E-04	540.	6.013E-04	5.830E-04
S	530.	530.	3.564E-04	3.457E-04	530.	4.307E-04	4.176E-04
SSW	540.	540.	3.743E-04	3.630E-04	540.	4.345E-04	4.213E-04
SW	632.	632.	2.254E-04	2.186E-04	632.	1.980E-04	1.920E-04
WSW	555.	555.	2.280E-04	2.212E-04	555.	1.855E-04	1.799E-04
W	500.	500.	3.175E-04	3.080E-04	500.	1.971E-04	1.911E-04
WNW	434.	434.	5.483E-04	5.319E-04	434.	4.559E-04	4.420E-04
NW	428.	428.	8.796E-04	8.532E-04	428.	9.766E-04	9.468E-04
NNW	442.	442.	1.222E-03	1.185E-03	442.	1.523E-03	1.477E-03

Braidwood Site Meteorological Data 1/78 - 12/87

Table F-7a (Continued)

Maximum Offsite Finite Plume Gamma Dose Factors Based on 1 cm Depth at the Restricted Area Boundary for Xe-131m

Downwind Direction	Restricted Area Bound (meters)	Mixed Mode (Vent) Release Radius (meters)	V (mrad/yr)/(uCi/sec)	VBAR (mrad/yr)/(uCi/sec)	Ground Level Release Radius (meters)	G (mrad/yr)/(uCi/sec)	GBAR (mrad/yr)/(uCi/sec)
N	305.	305.	3.585E-04	2.801E-04	305.	1.342E-03	1.040E-03
NNE	265.	265.	3.471E-04	2.710E-04	265.	1.225E-03	9.489E-04
NE	299.	299.	1.442E-04	1.135E-04	299.	8.221E-04	6.377E-04
ENE	361.	361.	1.274E-04	1.002E-04	361.	6.227E-04	4.832E-04
E	355.	355.	1.664E-04	1.307E-04	355.	8.136E-04	6.311E-04
ESE	425.	425.	1.406E-04	1.108E-04	425.	6.887E-04	5.349E-04
SE	448.	448.	1.152E-04	9.088E-05	448.	6.093E-04	4.733E-04
SSE	540.	540.	6.798E-05	5.395E-05	540.	3.772E-04	2.936E-04
S	530.	530.	6.550E-05	5.172E-05	530.	4.533E-04	3.523E-04
SSW	540.	540.	5.419E-05	4.299E-05	540.	3.656E-04	2.846E-04
SW	632.	632.	6.073E-05	4.813E-05	632.	3.620E-04	2.819E-04
WSW	555.	555.	8.569E-05	6.762E-05	555.	5.701E-04	4.435E-04
W	500.	500.	1.006E-04	7.904E-05	500.	6.184E-04	4.805E-04
WNW	434.	434.	1.391E-04	1.088E-04	434.	7.616E-04	5.907E-04
NW	428.	428.	1.429E-04	1.121E-04	428.	6.807E-04	5.285E-04
NNW	442.	442.	1.521E-04	1.194E-04	442.	7.027E-04	5.461E-04

Braidwood Site Meteorological Data 1/78 - 12/87

Table F-7a (Continued)

Maximum Offsite Finite Plume Gamma Dose Factors Based on 1 cm Depth at the Restricted Area Boundary for Xe-133m

Downwind	Restricted	Mixed Mode (Vent) Release			Ground Level Release		
Direction	Area Bound	Radius	V	VBAR	Radius	G	GBAR
	(meters)	(meters)	(mrad/yr)/(uCi/sec)		(meters)	(mrad/yr)/(uCi/sec)	
N	305.	305.	6.308E-04	5.411E-04	305.	2.135E-03	1.798E-03
NNE	265.	265.	6.053E-04	5.184E-04	265.	1.940E-03	1.632E-03
NE	299.	299.	2.759E-04	2.399E-04	299.	1.321E-03	1.115E-03
ENE	361.	361.	2.417E-04	2.099E-04	361.	1.005E-03	8.488E-04
E	355.	355.	3.110E-04	2.695E-04	355.	1.307E-03	1.103E-03
ESE	425.	425.	2.701E-04	2.350E-04	425.	1.125E-03	9.516E-04
SE	448.	448.	2.251E-04	1.964E-04	448.	9.971E-04	8.442E-04
SSE	540.	540.	1.413E-04	1.245E-04	540.	6.325E-04	5.379E-04
S	530.	530.	1.293E-04	1.131E-04	530.	7.461E-04	6.326E-04
SSW	540.	540.	1.123E-04	9.889E-05	540.	6.124E-04	5.209E-04
SW	632.	632.	1.243E-04	1.092E-04	632.	6.091E-04	5.186E-04
WSW	555.	555.	1.679E-04	1.466E-04	555.	9.488E-04	8.060E-04
W	500.	500.	1.883E-04	1.632E-04	500.	1.014E-03	8.589E-04
WNW	434.	434.	2.477E-04	2.129E-04	434.	1.222E-03	1.031E-03
NW	428.	428.	2.634E-04	2.277E-04	428.	1.107E-03	9.360E-04
NNW	442.	442.	2.813E-04	2.434E-04	442.	1.157E-03	9.803E-04

Braidwood Site Meteorological Data 1/78 - 12/87

Table F-7a (Continued)

Maximum Offsite Finite Plume Gamma Dose Factors Based on 1 cm Depth at the Restricted Area Boundary for Xe-133

Downwind Direction	Restricted Area Bound (meters)	Mixed Mode (Vent) Release Radius (meters)	V (mrad/yr)/(uCi/sec)	VBAR (mrad/yr)/(uCi/sec)	Ground Level Release Radius (meters)	G (mrad/yr)/(uCi/sec)	GBAR (mrad/yr)/(uCi/sec)
N	305.	305.	6.810E-04	6.050E-04	305.	2.299E-03	2.013E-03
NNE	265.	265.	6.509E-04	5.774E-04	265.	2.084E-03	1.823E-03
NE	299.	299.	2.984E-04	2.679E-04	299.	1.431E-03	1.256E-03
ENE	361.	361.	2.612E-04	2.343E-04	361.	1.090E-03	9.571E-04
E	355.	355.	3.363E-04	3.011E-04	355.	1.414E-03	1.241E-03
ESE	425.	425.	2.954E-04	2.656E-04	425.	1.226E-03	1.079E-03
SE	448.	448.	2.460E-04	2.216E-04	448.	1.088E-03	9.581E-04
SSE	540.	540.	1.555E-04	1.411E-04	540.	6.963E-04	6.158E-04
S	530.	530.	1.408E-04	1.270E-04	530.	8.174E-04	7.209E-04
SSW	540.	540.	1.231E-04	1.117E-04	540.	6.754E-04	5.974E-04
SW	632.	632.	1.367E-04	1.238E-04	632.	6.726E-04	5.954E-04
WSW	555.	555.	1.830E-04	1.649E-04	555.	1.044E-03	9.224E-04
W	500.	500.	2.055E-04	1.842E-04	500.	1.108E-03	9.759E-04
WNW	434.	434.	2.689E-04	2.394E-04	434.	1.323E-03	1.160E-03
NW	428.	428.	2.860E-04	2.557E-04	428.	1.204E-03	1.059E-03
NNW	442.	442.	3.071E-04	2.749E-04	442.	1.266E-03	1.116E-03

Braidwood Site Meteorological Data 1/78 - 12/87

Table F-7a (Continued)

Maximum Offsite Finite Plume Gamma Dose Factors Based on 1 cm Depth at the Restricted Area Boundary for Xe-135m

Downwind	Restricted	Mixed Mode (Vent) Release			Ground Level Release		
Direction	Area Bound	Radius	V	VBAR	Radius	G	GBAR
	(meters)	(meters)	(mrad/yr)/(uCi/sec)		(meters)	(mrad/yr)/(uCi/sec)	
N	305.	305.	4.596E-03	4.429E-03	305.	1.180E-02	1.135E-02
NNE	265.	265.	4.387E-03	4.227E-03	265.	1.125E-02	1.082E-02
NE	299.	299.	2.254E-03	2.174E-03	299.	7.028E-03	6.764E-03
ENE	361.	361.	1.883E-03	1.816E-03	361.	5.738E-03	5.523E-03
E	355.	355.	2.326E-03	2.242E-03	355.	7.076E-03	6.811E-03
ESE	425.	425.	2.121E-03	2.046E-03	425.	6.001E-03	5.778E-03
SE	448.	448.	1.723E-03	1.662E-03	448.	4.819E-03	4.640E-03
SSE	540.	540.	1.178E-03	1.137E-03	540.	3.220E-03	3.101E-03
S	530.	530.	9.052E-04	8.734E-04	530.	2.852E-03	2.747E-03
SSW	540.	540.	9.038E-04	8.720E-04	540.	2.739E-03	2.638E-03
SW	632.	632.	8.898E-04	8.587E-04	632.	2.532E-03	2.439E-03
WSW	555.	555.	1.092E-03	1.054E-03	555.	3.989E-03	3.842E-03
W	500.	500.	1.246E-03	1.202E-03	500.	4.617E-03	4.446E-03
WNW	434.	434.	1.593E-03	1.536E-03	434.	5.652E-03	5.441E-03
NW	428.	428.	1.869E-03	1.802E-03	428.	5.820E-03	5.603E-03
NNW	442.	442.	2.013E-03	1.940E-03	442.	5.812E-03	5.596E-03

Braidwood Site Meteorological Data 1/78 - 12/87

Table F-7a (Continued)

Maximum Offsite Finite Plume Gamma Dose Factors Based on 1 cm Depth at the Restricted Area Boundary for Xe-135

Downwind	Restricted	Mixed Mode (Vent) Release			Ground Level Release		
Direction	Area Bound	Radius	V	VBAR	Radius	G	GBAR
	(meters)	(meters)	(mrad/yr)/(uCi/sec)		(meters)	(mrad/yr)/(uCi/sec)	
N	305.	305.	3.039E-03	2.936E-03	305.	8.709E-03	8.406E-03
NNE	265.	265.	2.880E-03	2.781E-03	265.	7.856E-03	7.583E-03
NE	299.	299.	1.481E-03	1.431E-03	299.	5.482E-03	5.292E-03
ENE	361.	361.	1.284E-03	1.241E-03	361.	4.211E-03	4.065E-03
E	355.	355.	1.621E-03	1.567E-03	355.	5.425E-03	5.237E-03
ESE	425.	425.	1.455E-03	1.406E-03	425.	4.794E-03	4.629E-03
SE	448.	448.	1.235E-03	1.194E-03	448.	4.257E-03	4.110E-03
SSE	540.	540.	8.285E-04	8.008E-04	540.	2.811E-03	2.714E-03
S	530.	530.	7.163E-04	6.923E-04	530.	3.197E-03	3.087E-03
SSW	540.	540.	6.561E-04	6.342E-04	540.	2.709E-03	2.615E-03
SW	632.	632.	7.144E-04	6.906E-04	632.	2.708E-03	2.615E-03
WSW	555.	555.	9.205E-04	8.896E-04	555.	4.150E-03	4.007E-03
W	500.	500.	9.804E-04	9.473E-04	500.	4.340E-03	4.190E-03
WNW	434.	434.	1.210E-03	1.168E-03	434.	5.044E-03	4.869E-03
NW	428.	428.	1.348E-03	1.302E-03	428.	4.686E-03	4.524E-03
NNW	442.	442.	1.446E-03	1.397E-03	442.	4.987E-03	4.815E-03

Braidwood Site Meteorological Data 1/78 - 12/87

Table F-7a (Continued)

Maximum Offsite Finite Plume Gamma Dose Factors Based on 1 cm Depth at the Restricted Area Boundary for Xe-137

Downwind Direction	Restricted Area Bound (meters)	Mixed Mode (Vent) Release Radius (meters)	V (mrad/yr)/(uCi/sec)	VBAR (mrad/yr)/(uCi/sec)	Ground Level Release Radius (meters)	G (mrad/yr)/(uCi/sec)	GBAR (mrad/yr)/(uCi/sec)
N	305.	305.	1.764E-03	1.707E-03	305.	3.915E-03	3.788E-03
NNE	265.	265.	1.712E-03	1.657E-03	265.	3.949E-03	3.821E-03
NE	299.	299.	8.519E-04	8.244E-04	299.	2.178E-03	2.108E-03
ENE	361.	361.	6.624E-04	6.410E-04	361.	1.748E-03	1.692E-03
E	355.	355.	8.157E-04	7.893E-04	355.	2.100E-03	2.032E-03
ESE	425.	425.	7.381E-04	7.142E-04	425.	1.690E-03	1.636E-03
SE	448.	448.	5.802E-04	5.615E-04	448.	1.259E-03	1.219E-03
SSE	540.	540.	3.822E-04	3.699E-04	540.	8.154E-04	7.890E-04
S	530.	530.	2.803E-04	2.713E-04	530.	6.471E-04	6.261E-04
SSW	540.	540.	2.864E-04	2.772E-04	540.	6.459E-04	6.250E-04
SW	632.	632.	2.577E-04	2.493E-04	632.	5.246E-04	5.076E-04
WSW	555.	555.	2.977E-04	2.881E-04	555.	7.771E-04	7.519E-04
W	500.	500.	3.453E-04	3.341E-04	500.	9.141E-04	8.844E-04
WNW	434.	434.	4.671E-04	4.520E-04	434.	1.275E-03	1.234E-03
NW	428.	428.	6.017E-04	5.823E-04	428.	1.543E-03	1.493E-03
NNW	442.	442.	6.784E-04	6.565E-04	442.	1.588E-03	1.537E-03

Braidwood Site Meteorological Data 1/78 - 12/87

Table F-7a (Continued)

Maximum Offsite Finite Plume Gamma Dose Factors Based on 1 cm Depth at the Restricted Area Boundary for Xe-138

Downwind Direction	Restricted Area Bound (meters)	Mixed Mode (Vent) Release Radius (meters)	V (mrad/yr)/(uCi/sec)	VBAR (mrad/yr)/(uCi/sec)	Ground Level Release Radius (meters)	G (mrad/yr)/(uCi/sec)	GBAR (mrad/yr)/(uCi/sec)
N	305.	305.	1.001E-02	9.714E-03	305.	2.457E-02	2.384E-02
NNE	265.	265.	9.553E-03	9.273E-03	265.	2.347E-02	2.278E-02
NE	299.	299.	5.016E-03	4.870E-03	299.	1.459E-02	1.416E-02
ENE	361.	361.	4.169E-03	4.048E-03	361.	1.195E-02	1.160E-02
E	355.	355.	5.137E-03	4.988E-03	355.	1.471E-02	1.427E-02
ESE	425.	425.	4.679E-03	4.543E-03	425.	1.247E-02	1.210E-02
SE	448.	448.	3.827E-03	3.716E-03	448.	9.982E-03	9.687E-03
SSE	540.	540.	2.630E-03	2.554E-03	540.	6.694E-03	6.497E-03
S	530.	530.	2.023E-03	1.964E-03	530.	5.857E-03	5.684E-03
SSW	540.	540.	2.021E-03	1.962E-03	540.	5.661E-03	5.495E-03
SW	632.	632.	1.991E-03	1.934E-03	632.	5.226E-03	5.072E-03
WSW	555.	555.	2.429E-03	2.359E-03	555.	8.199E-03	7.957E-03
W	500.	500.	2.739E-03	2.659E-03	500.	9.502E-03	9.221E-03
WNW	434.	434.	3.459E-03	3.358E-03	434.	1.164E-02	1.130E-02
NW	428.	428.	4.093E-03	3.974E-03	428.	1.207E-02	1.172E-02
NNW	442.	442.	4.399E-03	4.271E-03	442.	1.204E-02	1.169E-02

Braidwood Site Meteorological Data 1/78 - 12/87

Table F-7a (Continued)

Maximum Offsite Finite Plume Gamma Dose Factors Based on 1 cm Depth at the Restricted Area Boundary for Ar-41

Downwind	Restricted	Mixed Mode (Vent) Release			Ground Level Release		
Direction	Area Bound	Radius	V	VBAR	Radius	G	GBAR
	(meters)	(meters)	(mrad/yr)/(uCi/sec)		(meters)	(mrad/yr)/(uCi/sec)	
N	305.	305.	1.160E-02	1.122E-02	305.	3.106E-02	3.006E-02
NNE	265.	265.	1.101E-02	1.065E-02	265.	2.826E-02	2.736E-02
NE	299.	299.	5.833E-03	5.646E-03	299.	1.936E-02	1.874E-02
ENE	361.	361.	5.023E-03	4.863E-03	361.	1.505E-02	1.456E-02
E	355.	355.	6.295E-03	6.094E-03	355.	1.925E-02	1.864E-02
ESE	425.	425.	5.640E-03	5.459E-03	425.	1.689E-02	1.635E-02
SE	448.	448.	4.783E-03	4.630E-03	448.	1.477E-02	1.430E-02
SSE	540.	540.	3.262E-03	3.157E-03	540.	9.781E-03	9.468E-03
S	530.	530.	2.756E-03	2.667E-03	530.	1.066E-02	1.032E-03
SSW	540.	540.	2.580E-03	2.497E-03	540.	9.211E-03	8.917E-03
SW	632.	632.	2.748E-03	2.660E-03	632.	9.104E-03	8.813E-03
WSW	555.	555.	3.504E-03	3.392E-03	555.	1.404E-02	1.359E-02
W	500.	500.	3.715E-03	3.596E-03	500.	1.498E-02	1.450E-02
WNW	434.	434.	4.539E-03	4.393E-03	434.	1.753E-02	1.697E-02
NW	428.	428.	5.159E-03	4.994E-03	428.	1.652E-02	1.599E-02
NNW	442.	442.	5.499E-03	5.323E-03	442.	1.734E-02	1.679E-02

Braidwood Site Meteorological Data 1/78 - 12/87

Supplemental Table A
Mixed Mode Joint Frequency Distribution Table Summaries

203 Foot Elevation Data

Summary Table of Percent by Direction and Class

Class	N	NNE	NE	ENE	E	ESE	SE	SSE	S	SSW	SW	WSW	W	WNW	NW	NNW	Total
A	.290	.321	.441	.315	.303	.256	.292	.266	.474	.369	.202	.197	.191	.274	.463	.421	5.076
B	.197	.241	.284	.208	.205	.167	.196	.220	.352	.288	.190	.192	.206	.225	.327	.335	3.833
C	.321	.302	.421	.293	.201	.203	.277	.312	.437	.404	.322	.342	.373	.399	.457	.409	5.474
D	1.523	1.590	2.149	1.974	1.372	1.014	1.324	1.529	2.031	1.900	1.899	1.846	2.109	2.248	2.191	2.014	28.713
E	.679	.612	.764	.976	.986	.870	1.136	1.439	2.079	1.501	1.065	.921	.993	1.133	.922	.790	16.866
F	.344	.278	.260	.298	.387	.496	.530	.438	.559	.526	.386	.397	.589	.688	.556	417	7.148
G	.166	.095	.098	.078	.156	.174	.270	.213	.186	.199	.258	.210	.253	.266	.184	.159	2.966
Total	3.520	3.439	4.418	4.143	3.611	3.180	4.025	4.418	6.118	5.187	4.322	4.104	4.714	5.231	5.100	4.545	70.076

Summary Table of Percent by Direction and Speed

Speed	N	NNE	NE	ENE	E	ESE	SE	SSE	S	SSW	SW	WSW	W	WNW	NW	NNW	Total
.45	.008	.016	.027	.025	.001	.000	.017	.017	.001	.001	.002	.016	.037	.026	.001	.026	.222
1.05	.044	.032	.042	.045	.026	.025	.036	.031	.032	.023	.033	.025	.037	.035	.040	.026	.532
2.05	.224	.266	.281	.260	.239	.213	.243	.225	.237	.220	.208	.208	.262	.244	.244	.243	3.819
3.05	.405	.426	.540	.610	.459	.334	.467	.438	.596	.383	.393	.384	.447	.437	.507	.487	7.313
4.05	.669	.622	.756	.973	.670	.453	.614	.663	.695	.543	.596	.663	.678	.702	.749	.782	10.829
5.05	.624	.519	.875	.926	.681	.482	.669	.639	.769	.677	.711	.681	.738	.782	.889	.808	11.470
6.05	.670	.607	.761	.675	.674	.587	.657	.729	.944	.825	.833	.766	.788	.975	.909	.876	12.279
8.05	.732	.789	.956	.534	.726	.919	1.073	1.227	2.070	1.858	1.268	1.131	1.378	1.598	1.381	1.041	18.680
10.05	.137	.154	.174	.094	.127	.158	.235	.423	.727	.621	.265	.216	.331	.404	.359	.245	4.667
13.05	.007	.008	.005	.002	.008	.010	.014	.026	.047	.037	.012	.012	.017	.028	.020	.012	.265
18.00	.000	.000	.000	.000	.000	.000	.000	.000	.000	.000	.000	.000	.000	.000	.000	.000	.000
99.00	.000	.000	.000	.000	.000	.000	.000	.000	.000	.000	.000	.000	.000	.000	.000	.000	.000
Total	3.520	3.439	4.418	4.143	3.611	3.180	4.025	4.418	6.118	5.187	4.322	4.104	4.714	5.231	5.100	4.545	70.076

NOTE: Wind directions in tables are presented in "wind from" and not "wind to" direction.

In order to determine the final mixed mode values, 70.076% of the elevated value (presented in the 250 FT Mixed Mode table) and 29.924% of the ground level value (presented in the 30 FT Mixed Mode table) are used to calculate the final values.

Supplemental Table A - Continued
Mixed Mode Joint Frequency Distribution Table Summaries

203 Foot Elevation Data

Summary Table of Percent by Speed and Class

Class Speed	A	B	C	D	E	F	G
.45	.006	.005	.006	.075	.052	.048	.030
1.05	.014	.025	.027	.200	.108	.071	.086
2.05	.175	.197	.378	1.756	.659	.372	.283
3.05	.500	.593	.836	3.100	1.206	.683	.393
4.05	.803	.697	1.005	4.441	2.225	1.083	.575
5.05	.880	.674	.921	4.456	2.845	1.230	.464
6.05	.885	.588	.806	4.760	3.357	1.417	.466
8.05	1.469	.854	1.160	7.631	5.000	1.976	.591
10.05	.325	.190	.320	2.165	1.332	.259	.076
13.05	.018	.011	.015	.129	.081	.009	.002
18.00	.000	.000	.000	.000	.000	.000	.000
99.00	.000	.000	.000	.000	.000	.000	.000

Supplemental Table A - Continued
Mixed Mode Joint Frequency Distribution Table Summaries

34 Foot Elevation Data

Summary Table of Percent by Direction and Class

Class	N	NNE	NE	ENE	E	ESE	SE	SSE	S	SSW	SW	WSW	W	WNW	NW	NNW	Total
A	.068	.071	.077	.054	.100	.075	.110	.135	.278	.215	.062	.050	.127	.270	.257	.176	2.125
B	.054	.044	.059	.031	.035	.049	.061	.083	.172	.123	.058	.045	.121	.176	.150	.098	1.357
C	.067	.056	.098	.059	.044	.049	.091	.124	.212	.133	.121	.082	.212	.276	.219	.164	2.005
D	.453	.551	.613	.453	.420	.423	.641	.926	1.487	1.230	.697	.717	1.084	1.496	1.044	.889	13.125
E	.304	.387	.249	.180	.230	.368	.580	1.093	1.991	1.311	.435	.346	.299	.343	.227	.317	8.659
F	.044	.063	.050	.059	.086	.160	.161	.137	.339	.306	.077	.133	.144	.130	.074	.050	2.014
G	.022	.006	.013	.025	.035	.059	.061	.037	.102	.079	.024	.058	.039	.038	.026	.017	.641
Total	1.012	1.177	1.159	.860	.950	1.181	1.705	2.535	4.580	3.397	1.475	1.430	2.027	2.729	1.997	1.709	29.924

Summary Table of Percent by Direction and Speed

Speed	N	NNE	NE	ENE	E	ESE	SE	SSE	S	SSW	SW	WSW	W	WNW	NW	NNW	Total
.45	.014	.002	.014	.018	.010	.009	.004	.008	.001	.001	.000	.000	.005	.000	.008	.000	.096
1.05	.014	.016	.027	.048	.065	.061	.030	.025	.013	.010	.010	.016	.019	.018	.018	.017	.408
2.05	.051	.052	.093	.181	.246	.259	.165	.099	.072	.055	.051	.087	.119	.138	.103	.077	1.849
3.05	.121	.145	.172	.202	.189	.251	.309	.248	.269	.222	.166	.260	.234	.213	.174	.151	3.325
4.05	.158	.155	.187	.158	.173	.215	.319	.364	.490	.509	.246	.222	.241	.243	.237	.220	4.139
5.05	.130	.134	.156	.123	.152	.191	.296	.385	.600	.521	.236	.146	.233	.287	.270	.214	4.075
6.05	.141	.152	.186	.089	.098	.128	.310	.435	.718	.639	.216	.167	.244	.388	.340	.247	4.499
8.05	.250	.325	.268	.038	.017	.066	.236	.667	1.496	1.032	.420	.321	.544	.922	.648	.498	7.748
10.05	.111	.168	.050	.001	.000	.001	.032	.214	.679	.302	.102	.117	.269	.371	.183	.199	2.799
13.05	.023	.029	.006	.000	.000	.000	.005	.076	.214	.102	.024	.082	.107	.131	.015	.076	.891
18.00	.000	.000	.000	.000	.000	.000	.000	.014	.027	.002	.004	.012	.011	.017	.000	.010	.096
99.00	.000	.000	.000	.000	.000	.000	.000	.000	.000	.000	.000	.000	.000	.000	.000	.000	.000
Total	1.012	1.177	1.159	.860	.950	1.181	1.705	2.535	4.580	3.397	1.475	1.430	2.027	2.729	1.997	1.709	29.924

NOTE: Wind directions in tables are presented in "wind from" and not "wind to" direction.

Supplemental Table A - Continued
Mixed Mode Joint Frequency Distribution Table Summaries

34 Foot Elevation Data

Summary Table of Percent by Speed and Class

Class Speed	A	B	C	D	E	F	G
.45	.000	.000	.000	.006	.015	.031	.044
1.05	.001	.001	.003	.049	.126	.151	.076
2.05	.017	.020	.029	.335	.690	.531	.226
3.05	.127	.103	.157	1.118	1.175	.491	.155
4.05	.277	.192	.291	1.686	1.211	.383	.098
5.05	.332	.209	.274	1.870	1.179	.176	.035
6.05	.381	.219	.358	2.236	1.223	.076	.005
8.05	.735	.445	.632	3.993	1.844	.098	.001
10.05	.214	.126	.211	1.358	.837	.053	.000
13.05	.038	.040	.044	.424	.320	.024	.000
18.00	.001	.002	.004	.049	.040	.000	.000
99.00	.000	.000	.000	.000	.000	.000	.000

Supplemental Table B
Ground Level Joint Frequency Distribution Table Summaries

Summary Table of Percent by Direction and Class

Class	N	NNE	NE	ENE	E	ESE	SE	SSE	S	SSW	SW	WSW	W	WNW	NW	NNW	Total
A	.379	.415	.470	.394	.420	291	.417	.418	.728	.637	.246	.229	.358	.572	.648	.609	7.230
B	.280	.286	.336	.241	.229	.206	.265	.332	.539	.411	.256	.206	.340	.407	.441	.431	5.203
C	.385	.373	.501	.358	.246	.226	.388	.471	.665	.521	.462	.380	.598	.688	.624	.619	7.504
D	2.098	2.216	2.532	2.483	1.766	1.392	2.034	2.692	3.611	3.198	2.674	2.392	3.065	3.678	3.063	2.925	41.820
E	.968	1.029	.914	1.221	1.210	1.387	1.849	2.754	4.116	2.772	1.298	1.258	1.197	1.411	1.052	1.068	25.502
F	.339	.347	.302	.382	.552	.788	.729	.605	.949	.850	.366	.630	.795	.765	.441	.313	9.153
G	.147	.074	.128	.163	.228	.358	.330	.229	.404	.300	.133	.268	.248	.233	.191	.157	3.588
Total	4.595	4.740	5.183	5.242	4.650	4.647	6.012	7.502	11.013	8.687	5.435	5.359	6.600	7.753	6.460	6.122	100.000

Summary Table of Percent by Direction and Speed

Speed	N	NNE	NE	ENE	E	ESE	SE	SSE	S	SSW	SW	WSW	W	WNW	NW	NNW	Total
.45	.194	.111	.128	.160	.078	.087	.042	.126	.063	.013	.078	.004	.037	.051	.101	.054	1.328
1.05	.219	.263	.364	.579	.686	.517	.311	.267	.218	.181	.174	.196	.257	.264	.275	.269	5.038
2.05	.630	.645	.996	1.658	1.833	1.698	1.367	.962	.771	.631	.561	.842	1.076	1.169	.952	.780	16.571
3.05	.949	1.045	1.179	1.382	1.085	1.218	1.744	1.581	1.820	1.435	1.128	1.533	1.442	1.369	1.174	1.070	21.156
4.05	.915	.902	1.015	.839	.577	.624	1.228	1.593	2.123	2.039	1.256	1.084	1.167	1.180	1.189	1.215	18.947
5.05	.650	.641	.667	.416	.260	.292	.641	1.126	1.881	1.520	.937	.609	.884	1.104	.995	.959	13.582
6.05	.495	.462	.432	.159	.113	.143	.395	.758	1.435	1.236	.598	.445	.644	.936	.770	.751	9.771
8.05	.408	.472	.346	.046	.018	.067	.247	.785	1.782	1.226	.573	.436	.706	1.160	.806	.738	9.815
10.05	.113	.170	.050	.001	.000	.001	.032	.214	.679	.302	.102	.116	.269	.372	.183	.201	2.805
13.05	.023	.029	.006	.000	.000	.000	.005	.076	.214	.102	.024	.082	.107	.131	.015	.076	.889
18.00	.000	.000	.000	.000	.000	.000	.000	.014	.027	.002	.004	.012	.011	.017	.000	.010	.096
99.00	.000	.000	.000	.000	.000	.000	.000	.000	.000	.000	.000	.000	.000	.000	.000	.000	.000
Total	4.595	4.740	5.183	5.242	4.650	4.647	6.012	7.502	11.013	8.687	5.435	5.359	6.600	7.753	6.460	6.122	100.000

NOTE: Wind directions in tables are presented in "wind from" and not "wind to" direction.

Supplemental Table B -Continued
Ground Level Joint Frequency Distribution Table Summaries

Summary Table of Percent by Speed and Class

Class Speed	A	B	C	D	E	F	G
.45	.027	.018	.021	.197	.339	.388	.338
1.05	.102	.093	.145	1.038	1.463	1.379	.818
2.05	.426	.498	.798	4.865	5.159	3.380	1.446
3.05	1.147	1.009	1.493	8.268	6.225	2.342	.672
4.05	1.618	1.158	1.699	8.574	4.596	1.059	.244
5.05	1.446	.969	1.213	6.908	2.689	.304	.055
6.05	1.155	.661	1.007	5.053	1.763	.118	.014
8.05	1.054	.629	.870	5.084	2.068	.107	.002
10.05	.215	.126	.212	1.360	.839	.053	.000
13.05	.038	.040	.044	.423	.320	.024	.000
18.00	.001	.002	.004	.049	.040	.000	.000
99.00	.000	.000	.000	.000	.000	.000	.000

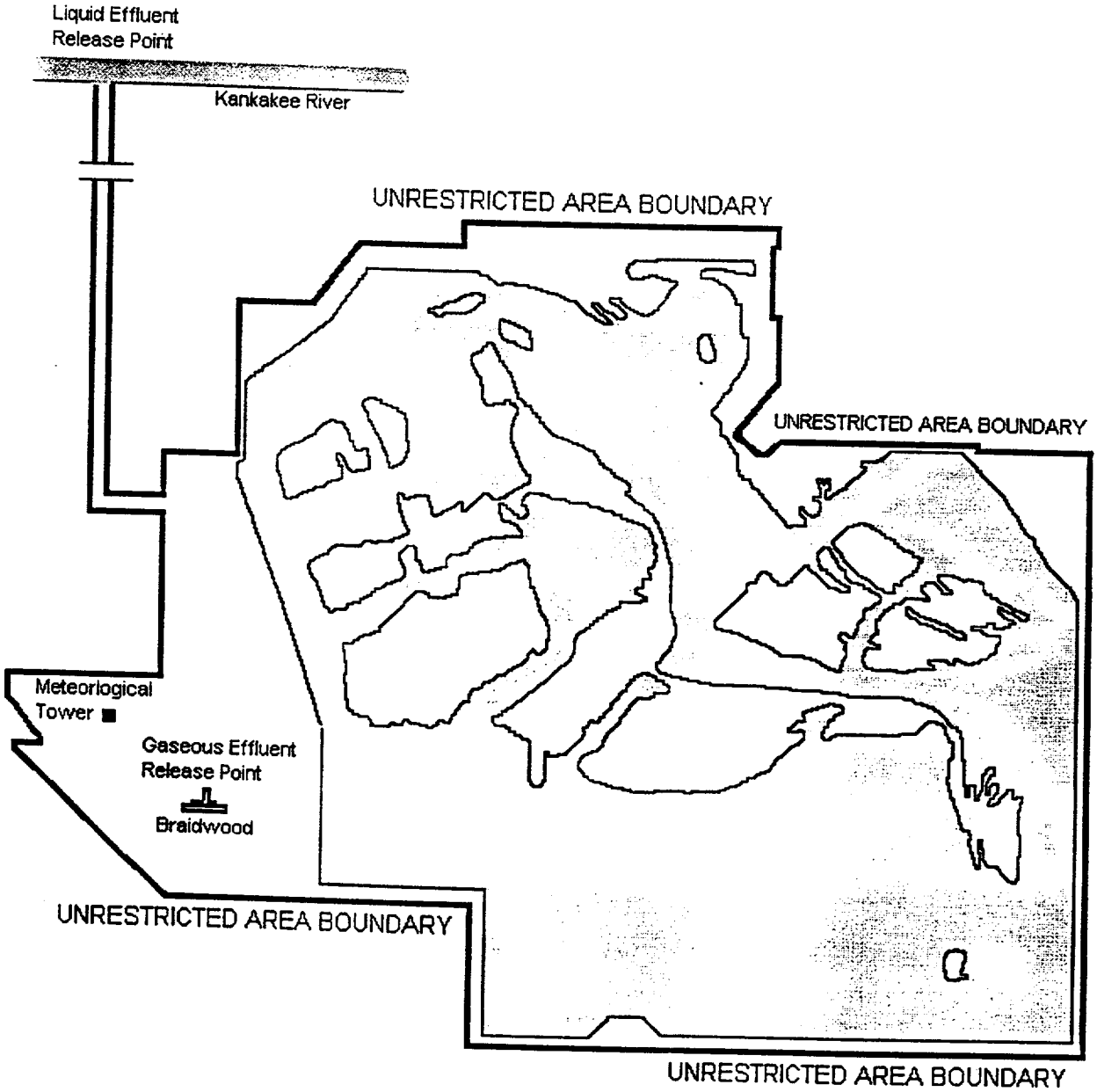

N

OFFSITE DOSE CALCULATION
MANUAL BRAIDWOOD STATION

FIGURE F-1
UNRESTRICTED AREA BOUNDARY

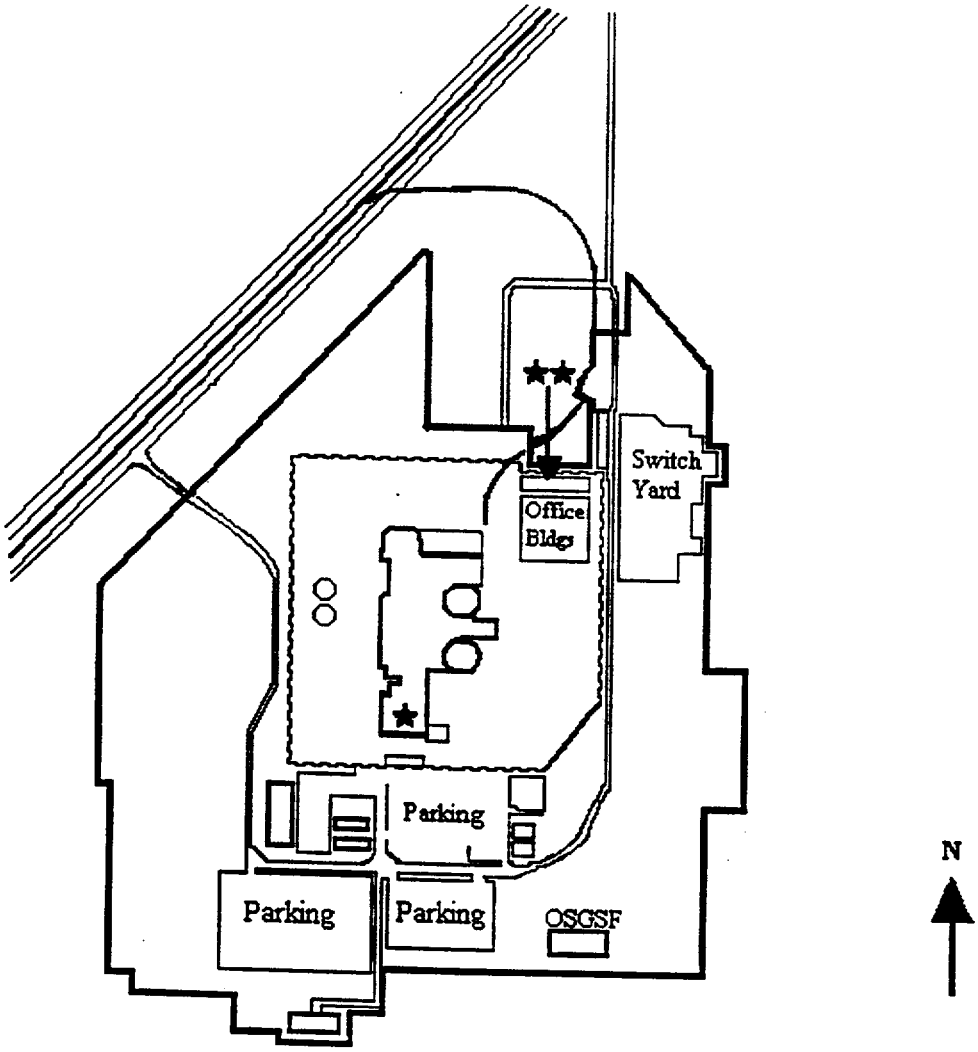

★ Low Level Radwaste Storage Building (in Service Building Truck Bay)

★★ DAW Storage Area

— Restricted Area Boundary

OSGSF Old Steam Generator Storage Facility

OFFSITE DOSE CALCULATION MANUAL BRAIDWOOD STATION
FIGURE F-2 RESTRICTED AREA BOUNDARY

QUAD CITIES STATION

Quad Cities Station
Chapter 10 Change Summary
ODCM Revision 1.9, September 1999

Page or Section	Change Description
10 i	Updated revision number.
10-7	Removed footnote (and reference to it) that described the ten times 10CFR20 value can only be used post tech spec approval. These tech spec changes have been approved (1996). Improved spacing on page. Changed default value to 1 X 10^{-5} uCi/mL from 1 X 10^{-6} uCi/mL. This can be done since we are using the ten times 10CFR20 value now. In addition, the 1 X 10^{-5} uCi/mL value has been in use (per QCCP 0300-03/now QCRP 6410-02) since tech spec approval. It should also be noted that the only reason we need to use a default value when calculating alarm setpoints is because there is normally no detectable radioactivity in the service water, but the setpoints must be based on some value. The 10CFR20 value for Cs-137 is 1 X 10^{-6} uCi/cc. Utilizing the allowed ten times value; this becomes 1 X 10^{-5} uCi/cc.
10-8	Removed footnote (and reference to it) that described the ten times 10CFR20 value can only be used post tech spec approval. These tech spec changes have been approved.

QUAD CITIES ANNEX INDEX

PAGE	REVISION
CHAPTER 10	
10-i	1.9
10-ii	1.9
10-iii	1.9
10-iv	1.9
10-v	1.9
10-1	1.9
10-2	1.9
10-3	1.9
10-4	1.9
10-5	1.9
10-6	1.9
10-7	1.9
10-8	1.9
10-9	1.9
10-10	1.9
10-11	1.9
10-12	1.9
10-13	1.9
10-14	1.9

CHAPTER 10

RADIOACTIVE EFFLUENT TREATMENT AND MONITORING

TABLE OF CONTENTS

NUMBER PAGE

10.1 AIRBORNE RELEASES 1

1. System Description 1
   1. Condenser Offgas Treatment System 1
   2. Ventilation Exhaust Treatment System 1

2. Radiation Monitors 1
   1. Plant Chimney Monitor 1
   2. Reactor Building Vent Stack Effluent Monitor 1
   3. Reactor Building Ventilation Monitors 2
   4. Condenser Air Ejector Monitors 2

3. Alarm and Trip Setpoints 2
   1. Setpoint Calculation 3
      1. Reactor Building Vent Stack Monitors 3
      2. Condenser Air Ejector Monitors 3
      3. Plant Chimney Radiation Monitor 3
   2. Release Limits 3
   3. Release Mixture 3
   4. Conversion Factors 4
   5. HVAC Flow Rates 4

4. Allocation of Effluents from Common Release Points 5

5. Dose Projections 5

CHAPTER 10

RADIOACTIVE EFFLUENT TREATMENT AND MONITORING

TABLE OF CONTENTS (Cont'd)

NUMBER PAGE

10.2 LIQUID RELEASES 6

1. System Description 6
   1. River Discharge Tank 6

2. Radiation Monitors 6
   1. Liquid Radwaste Effluent Monitor 6
   2. Service Water Effluent Monitors 6

3. Alarm and Trip Setpoints 6
   1. Setpoint Calculations 6
      1. Liquid Radwaste Effluent Monitor 6
      2. Service Water Effluent Monitors 7
   2. Discharge Flow Rates 8
      1. Release Tank Discharge Flow Rate 8
   3. Release Limits 8
   4. Release Mixture 9
   5. Conversion Factors 9
   6. Liquid Dilution Flow Rates 9

4. Allocation of Effluents from Common Release Points 9

5. Projected Concentrations for Releases 9

10.3 SOLIDIFICATION OF WASTE/PROCESS CONTROL PROGRAM 10

LIST OF TABLES

- None -

CHAPTER 10

RADIOACTIVE EFFLUENT TREATMENT AND MONITORING

LIST OF FIGURES

NUMBER		PAGE
10-1	Simplified Gaseous Radwaste and Gaseous Effluent Flow Diagram	10-11
10-2	Simplified Liquid Radwaste Processing Diagram	10-12
10-3	Simplified Liquid Effluent Flow Diagram	10-13
10-4	Simplified Solid Radwaste Processing Diagram	10-14

CHAPTER 10

RADIOACTIVE EFFLUENT TREATMENT AND MONITORING

10.1 AIRBORNE RELEASES

10.1.1 System Description

A simplified gaseous radwaste and gaseous effluent flow diagram is provided in Figure 10-1.

Each airborne release point is classified as stack, vent, or ground level in accordance with the definitions in Section 4.1.4 and the results in Table A-1 of Appendix A. The principal release points for potentially radioactive airborne effluents and their classifications are as follows:

- The ventilation chimney (a stack release point).
- The reactor building ventilation stack (a vent release point).

10.1.1.1 Condenser Offgas Treatment System

The condenser offgas treatment system is designed and installed to reduce radioactive gaseous effluents by collecting non-condensable off-gases from the condenser and providing for holdup to reduce the total radioactivity by radiodecay prior to release to the environment. The daughter products are retained by charcoal and HEPA filters. The system is described in Section 11.3.2.1.1 of the Quad Cities UFSAR.

10.1.1.2 Ventilation Exhaust Treatment System

Ventilation exhaust treatment systems are designed and installed to reduce gaseous radioiodine or radioactive material in particulate form in selected effluent streams by passing ventilation or vent exhaust gases through charcoal adsorbers and/or HEPA filters prior to release to the environment. Such a system is not considered to have any effect on noble gas effluents. The ventilation exhaust treatment systems are shown in Figure 10-1.

Engineered safety features atmospheric cleanup systems are not considered to be ventilation exhaust treatment system components.

10.1.2 Radiation Monitors

10.1.2.1 Plant Chimney Monitor

Monitors 1(2)-1730A/B continuously monitor the final effluent from the chimney.

The monitor system has isokinetic sampling, gaseous grab sampling, iodine and particulate sampling, and tritium sampling capability.

The chimney effluent is also monitored by a separate particulate, iodine, and noble gas (SPING-4) system and a Victoreen system. The SPING/Victoreen system has high range capabilities to deal with accident conditions including postaccident sampling capability. The Victoreen sampling system automatically begins taking samples after a high signal has been received on the SPING-4 low range noble gas monitor. Output from the SPING/Victoreen system is obtainable in the control room.

No automatic isolation or control functions are performed by these monitors. Pertinent information on these monitors is provided in the Quad Cities UFSAR Section 11.5.2.3.

10.1.2.2 Reactor Building Vent Stack Effluent Monitor

The combined reactor building ventilation is also monitored by a SPING-4. This monitor has high range capabilities to deal with accident conditions. The SPING-4 noble gas detectors have ranges that envelope the range for the reactor building vent effluent trip point.

The vent stack monitor has isokinetic sampling and iodine and particulate sampling capability.

No automatic isolation or control functions are performed by this monitor.

Pertinent information on this monitor is provided in the Quad Cities UFSAR Section 11.5.2.4.

10.1.2.3 Reactor Building Ventilation Monitors

Monitors 1(2)-1735A/B continuously monitor the effluent from the Unit 1(2) reactor building. On high high alarm, the monitors automatically initiate closure of valves A01(2)A-5741, A01(2)B-5741, A01(2)A-5742, and A01(2)B-5742 thus isolating the Unit 1(2) reactor building, and initiate startup of the Unit 1(2) standby gas treatment system, and isolates control room HVAC.

In addition to the above monitors, there is continuous iodine and particulate sampling of the reactor building exhaust.

Pertinent information on these monitors is provided in Quad Cities UFSAR Section 11.5.2.4.

10.1.2.4 Condenser Air Ejector Monitors

Monitors 1(2)-1733A/B continuously monitor gross gamma activity downstream of the steam jet air ejector and prior to release to the main chimney.

On high high alarm the monitors automatically activate an interval timer which in turn initiates closure of air operated valve A01(2)-5406, thus terminating the release.

In addition, monitors 1(2)-1741 continuously monitor the final offgas effluent prior to entering the chimney, and monitors 1(2)-1738 continuously monitor gross gamma activity downstream of the steam jet air ejector. No control device is initiated by these monitors.

Pertinent information on these monitors is found in Quad Cities UFSAR Sections 11.5.2.1 and 11.5.2.2.

10.1.3 Alarm and Trip Setpoints

10.1.3.1 Setpoint Calculations

10.1.3.1.1 Reactor Building Vent Stack Monitors

The setpoint for the reactor building vent stack monitor is conservatively set at 2 mr/hr above background. The reactor building ventilation stack release rate, Q_{tv}, at 2 mr/hr is calculated to be 14,400 μCi/sec. Q_{tv} is then substituted into Equations 10-1 and 10-2 to determine Q_{ts}.

10.1.3.1.2 Condenser Air Ejector Monitors

The high-high trip setpoint is established at ≤100 μCi/sec per MWt (≈2.5E5 μCi/sec) and the high alarm is established at ≤50 μCi/sec per Mwt (≈1.25E5 μCi/sec).

10.1.3.1.3 Plant Chimney Radiation Monitor

The setpoints for the plant chimney radiation monitor are conservatively set at 10,000 μCi/sec and 20,000 μCi/sec (high and high-high alarms respectively).

At this level the combined release from chimney and vent is approximately 10% of the RETS limit. This is determined by solving Equations 10-1 and 10-2 below.

10.1.3.2 Release Limits

Alarm and trip setpoints of gaseous effluent monitors are established to ensure that the release rate limits of RETS are not exceeded. The release limit Q_{ts} is found by solving Equations 10-1 and 10-2.

$$(1.11)\ \Sigma\ \{f_i\ [Q_{ts}\ \overline{S_i} + Q_{tv}\ \overline{V_i}]\} < 500\ \text{mrem/yr} \qquad (10-1)$$

$$\Sigma\ \{\overline{L_i}\ f_i\ [\ (X/Q)_s\ Q_{ts}\ \exp(-\lambda_i R/3600u_s) + (X/Q)_v Q_{tv}\ \exp(-\lambda_i R/3600u_v)] \qquad (10-2)$$

$$+ (1.11)\ (f_i)[Q_{ts}S_i + Q_{tv}V_i]\} < 3000\ \text{mrem/yr}$$

The summations are over noble gas radionuclides i.

f_i Fractional Radionuclide Composition

The release rate of noble gas radionuclide i divided by the total release rate of all noble gas radionuclides.

Q_{ts} Total Allowed Release Rate, Stack Release [μCi/sec]

The total Allowed release rate of all noble gas radionuclides released as stack releases.

Q_{tv} Total Allowed Release Rate, Vent Release [μCi/sec]

The total allowed release rate of all noble gas radionuclides released as vent releases.

The remaining parameters in Equation 10-1 have the same definitions as in Equation A-8 of Appendix A. The remaining parameters in Equation 10-2 have the same definition as in Equation A-9 of Appendix A.

Equation 10-1 is based on Equation A-8 of Appendix A and the RETS restriction on whole body dose rate (500 mrem/yr) due to noble gases released in gaseous effluents (see Section A.1.3.1 of Appendix A). Equation 10-2 is based on Equation A-9 of Appendix A and the RETS restriction on skin dose rate (3000 mrem/yr) due to noble gases released in gaseous effluents (see Section A.1.3.2 of Appendix A).

The value of Equation 10-1 (2.3×10^6 μCi/sec) is used as the limiting noble gas release rate.

Calibration methods and surveillance frequency for the monitors will be conducted as specified in the RETS.

10.1.3.3 Release Mixture

In the determination of alarm and trip set points the radioactivity mixture in the exhaust air is assumed to be the same as the analysis of a representative sample of noble gases collected at the recombiner during the calendar quarter in which the monitor is recalibrated.

10.1.3.4 Conversion Factors

The conversion factors used to establish gaseous effluent monitor setpoints are obtained as follows.

- Reactor building vent effluent monitor.

  The monitor setpoint is established at 2 mr/hr above background. For the purpose of setpont determination it is assumed that the background is 1 mr/hr. There is sufficient conservatism in the setpoint calculation to accommodate routine variations in the background. However, the isotopic analysis in Section 10.1.3.3 is used to confirm that the setpoint is conservative.

- Condenser air ejector monitor.

  The isotopic analysis in Section 10.1.3.3 and the flow and monitor reading at the time of the analysis are used to establish the conversion factor.

Plant chimney monitor.

Calibration of the plant chimney monitor consists of recirculating an amount of off-gas (see 10.1.3.3) through the noble gas monitors and a Marinelli beaker. After readings have stabilized, the Marinelli beaker is removed and gamma isotopic analysis performed. The efficiency is determined from a plot of average gamma energy of the off-gas sample and net monitor readings.

10.1.3.5 HVAC Flow Rates

The HVAC exhaust flow rates may be obtained from the process computers, indication in the control room, or fan combinations. Setpoints were calculated using the following values:

Chimney Air Flow	350,000 cfm
Combined Reactor Vent* (1 fan)	48,000 cfm
Combined Reactor Vent* (2 fans)	96,000 cfm

* per unit

10.1.4 Allocation of Effluents from Common Release Points

Radioactive gaseous effluents released from the main chimney are comprised of contributions from both units. Under normal operating conditions, it is difficult to allocate the radioactivity between units due to fuel performance, in-plant leakage, power history, and other variables. Consequently, allocation is normally made evenly between the units. During extended unit shutdowns or periods of known differences, the apportionment is adjusted accordingly. The allocation of effluents is estimated on a monthly basis.

10.1.5 Dose Projections

Because the gaseous releases are continuous, the doses are routinely calculated in accordance with the RETS.

10.2 LIQUID RELEASES

10.2.1 System Description

Simplified liquid radwaste and liquid effluent flow diagrams are provided in Figures 10-2 and 10-3.

The liquid radwaste treatment system is designed and installed to reduce radioactive liquid effluents by collecting the liquids, providing for retention or holdup, and providing for treatment by demineralizer for the purpose of reducing the total radioactivity prior to release to the environment. The system is described in Section 11.2 of the Quad Cities UFSAR.

10.2.1.1 River Discharge Tank

There is one river discharge tank (65,000 gallons capacity) which receives water for discharge to the Mississippi River. This is the only release path in use.

10.2.2 Radiation Monitors

10.2.2.1 Liquid Radwaste Effluent Monitor

Monitor 1/2-1799-01 is used to monitor all releases from the river discharge tank. On high alarm the release is terminated manually.

Pertinent information on the monitor and associated control devices is provided in Quad Cities UFSAR Sections 11.5.2 and 11.5.3.

10.2.2.2 Service Water Effluent Monitors

Monitors 1(2)-1799-01 continuously monitor the service water effluent. No control device is initiated by these monitors.

Pertinent information on these monitors is provided in Quad Cities UFSAR 11.5.3.

10.2.3 Alarm and Trip Setpoints

10.2.3.1 Setpoint Calculations

Alarm and trip setpoints of liquid effluent monitors at the principal release points are established to ensure that the limits of RETS are not exceeded in the unrestricted area.

Currently these setpoints are based on the most conservative releases during the previous 18 months. If it is determined that this is no longer conservative, the setpoints are reevaluated.

10.2.3.1.1 Liquid Radwaste Effluent Monitor

The monitor setpoint is found by solving equation 10-3 for the total isotopic activity.

$$P \leq (K) \times [\Sigma C_i^T / \Sigma (C_i^T / 10^{*}DWC_i)] \times [(0.5\, F^d_{AVG} + F^r_{max}) / F^r_{max}] + B \qquad (10-3)$$

P	Release Setpoint	[cpm]
C_i^T	Concentration of radionuclide i in the release tank.	[µCi/ml]
F^r_{max}	Maximum Release Tank Discharge Flow Rate The flow rate from the radwaste discharge tank.	[gpm]
K	Calibration constant	[cpm/µCi/ml]
DWC_i	Derived Water Concentration of radionuclide i From Appendix B, Table 2, Column 2 to 10CFR20.1001-20.2402.	[µCi/ml]
10	Multiplier granted in Technical Specifications applied to the DWC	
F^d_{AVG}	Average dilution flow of initial dilution stream	[gpm]
B	Background Count Rate	[cpm]

10.2.3.1.2 Service Water Effluent Monitors

The monitor setpoint is found by solving equation 10-4.

$$P \leq (K) \times [\Sigma C_i / \Sigma (C_i / 10^{*}DWC_i)] \times [(F^d_{AVG} + F^r_{max}) / F^r_{max}] + B \qquad (10-4)$$

C_i	Concentration of radionuclide i in service water If there is no detectable activity then $\Sigma C_i / \Sigma (C_i / 10^{*}DWC_i)$ is assumed to be 1×10^{-5} µCi/ml.	
F^r_{max}	Maximum discharge rate of service water for one unit.	[gpm]

All other terms are as defined in equation 10-3.

10.2.3.2 Discharge Flow Rates

10.2.3.2.1 Release Tank Discharge Flow Rate

Prior to each batch release, a grab sample is obtained.

The results of the analysis of the sample determine the discharge rate of each batch as follows:

$$F^r_{max} = 0.1\ (0.5\ F^d / \Sigma\ (C_i / 10{*}DWC_i)) \qquad (10\text{-}5)$$

The summation is over radionuclides i.

0.1	Reduction factor for conservatism.	
F^r_{max}	Maximum Permitted Discharge Flow Rate	[gpm]
	The maximum permitted flow rate from the radwaste discharge tank.	
F^d	Dilution Flow	[gpm]
C_i	Concentration of Radionuclide i in the Release Tank	[µCi/ml]
	The concentration of radioactivity in the radwaste discharge tank based on measurements of a sample drawn from the tank.	
DWC_i	Derived Water Concentration of radionuclide i	[µCi/ml]
	From Appendix B, Table 2, Column 2 to 10CFR20.1001-20.2402.	
10	Multiplier granted in Technical Specifications applied to the DWC	

10.2.3.3 Release Limits

Release limits are determined from RETS. Calculated maximum permissible discharge rates are divided by 10 and dilution flows are divided by 2 to ensure that releases are well below applicable limits. (The factor of 2 used in the dilution flows accounts for discharging the RDT tank to the south diffuser pipe).

10.2.3.4 Release Mixture

For the liquid radwaste effluent monitor the release mixture used for the setpoint determination is the radionuclide mix identified in the grab sample isotopic analysis plus four additional radionuclides. The additional radionuclides are H-3, Fe-55, Sr-89, and Sr-90. The quantities to be added are determined using scaling factors derived from station release data for the previous six months.

10.2.3.5 Conversion Factors

The readout for the liquid radwaste effluent monitor is in CPM. The calibration constant is based on the detector sensitivity to Cs-137.

10.2.3.6 Liquid Dilution Flow Rates

The dilution flow is determined using Equation 10-6 below.

$$F^{d} = (N^{cw} \times F^{cw} + N^{sw} \times F^{sw} - F^{ICE}) \quad (10\text{-}6)$$

F^{d} = Dilution flow [gpm]
N^{cw} = Number of circulating water pumps on.
F^{cw} = 157000 gpm
Flow with one circulating water pump on.
N^{sw} = Number of service water pumps on
F^{sw} = 13800 gpm
Flow with one service water pump on
F^{ICE} = Deicing flow

10.2.4 Allocation of Effluents from Common Release Points

Radioactive liquid effluent released from the release tank is comprised of contributions from both units.

Allocation of waste is achieved by comparing the pump timer totals for each unit's floor drain and equipment drain pumps to the amount of waste sent to the river discharge tank from the floor drain and waste collector storage tanks. Liquid effluents from laundry and chemical waste are allocated evenly between units. During extended unit shutdown or periods of significant plant input differences, the apportionment is adjusted accordingly. The allocation of the effluents is made on a monthly basis.

10.2.5 Projected Concentrations for Releases

If total DWC is greater than 25, the projected dose due to liquid effluent releases is calculated. Otherwise, the releases from the previous month are used to estimate the projected dose for the coming month using the methodology in Section A.2 of Appendix A. (See Section A.2.1 of Appendix A).

10.3 SOLIDIFICATION OF WASTE/PROCESS CONTROL PROGRAM

The process control program (PCP) contains the sampling, analysis, and formulation determination by which solidification of radioactive wastes from liquid systems is ensured.

Figure 10-4 is a simplified diagram of solid radwaste processing.

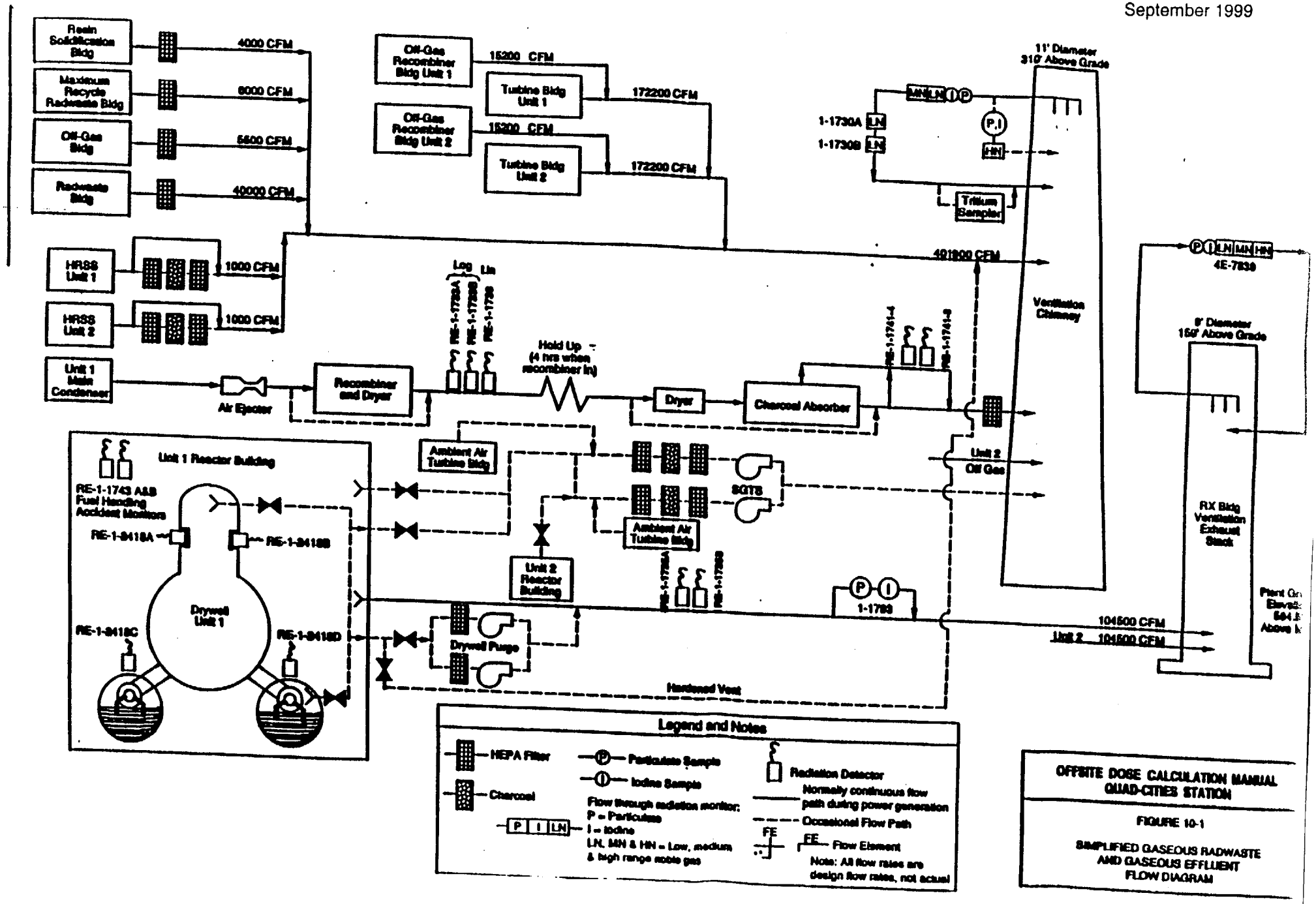

OFFSITE DOSE CALCULATION MANUAL
QUAD-CITIES STATION

FIGURE 10-1

SIMPLIFIED GASEOUS RADWASTE AND GASEOUS EFFLUENT FLOW DIAGRAM

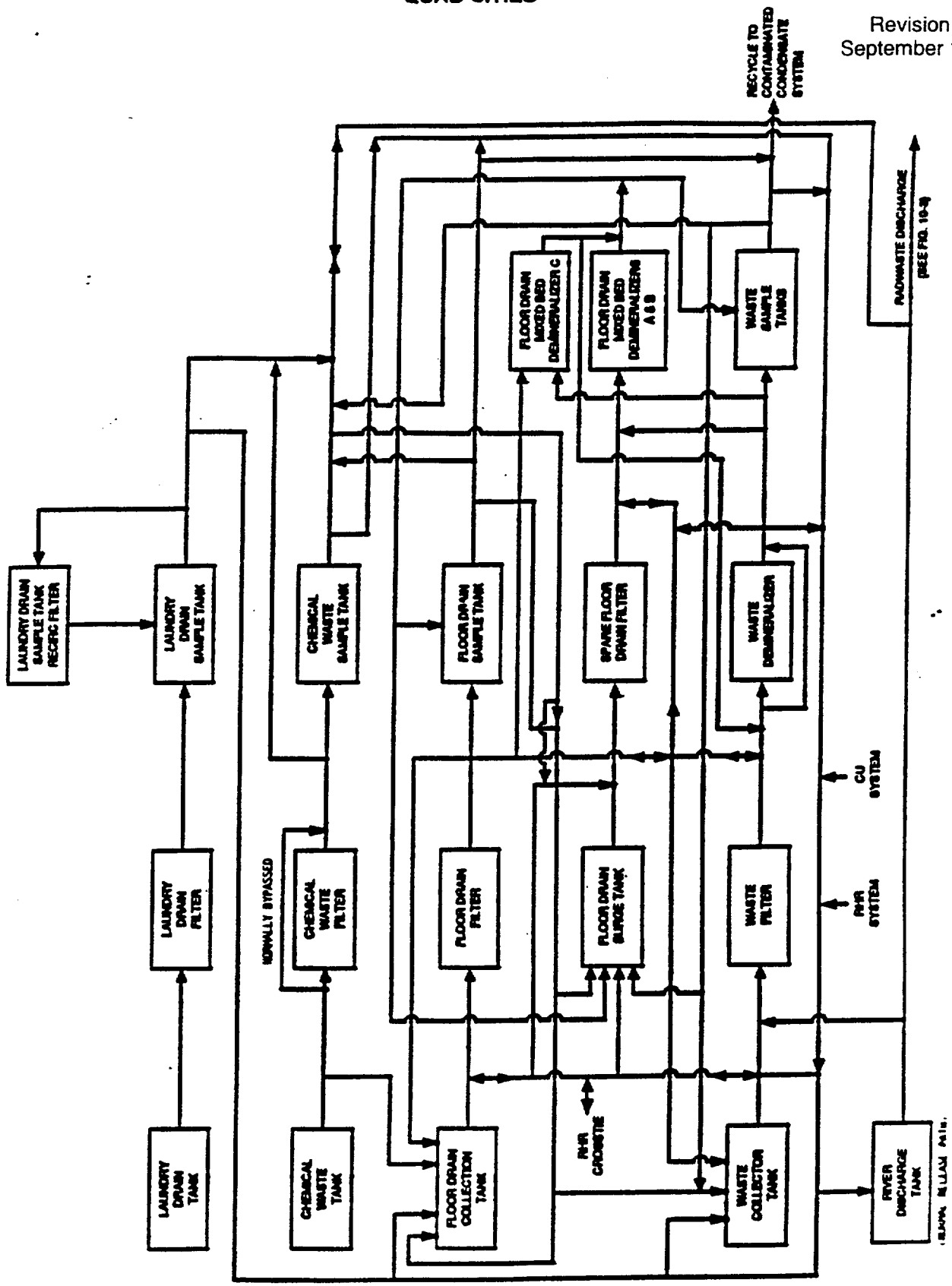

OFFSITE DOSE CALCULATION MANUAL
QUAD-CITIES STATION

FIGURE 10-2

SIMPLIFIED LIQUID RADWASTE PROCESSING DIAGRAM

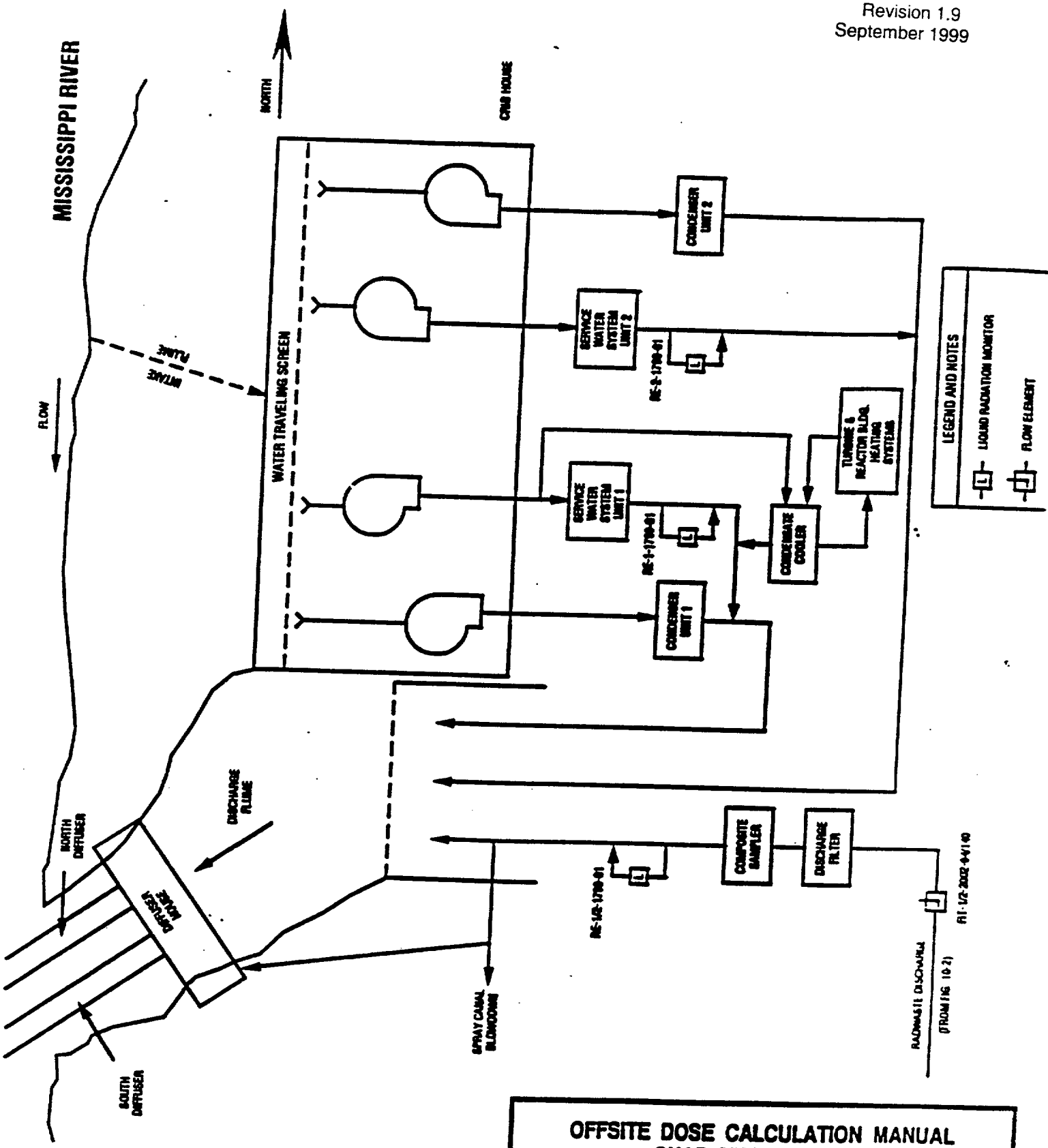

OFFSITE DOSE CALCULATION MANUAL
QUAD-CITIES STATION

FIGURE 10-3

SIMPLIFIED LIQUID EFFLUENT FLOW DIAGRAM

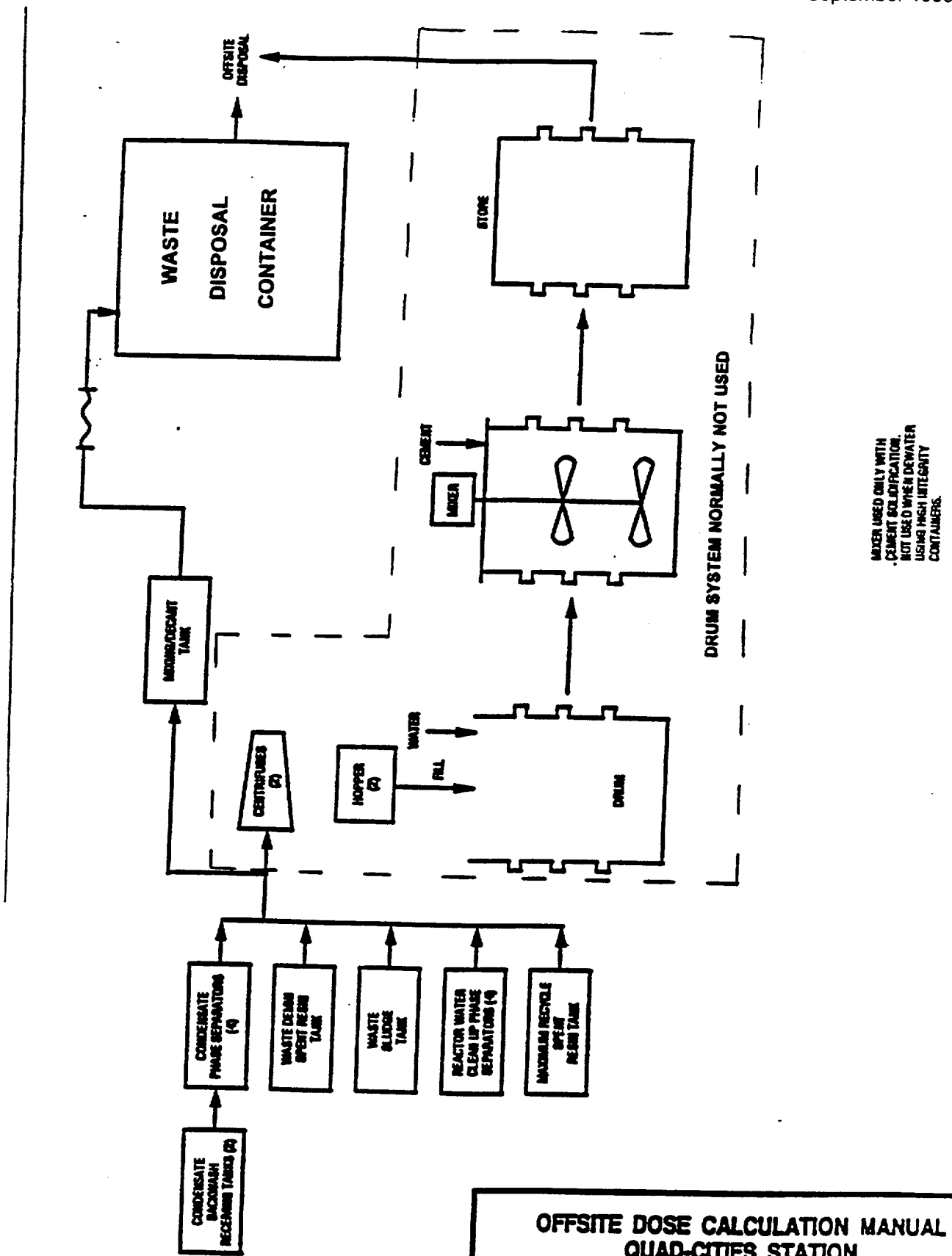

OFFSITE DOSE CALCULATION MANUAL
QUAD-CITIES STATION

FIGURE 10-4

SIMPLIFIED SOLID RADWASTE PROCESSING DIAGRAM

Quad Cities Station
Chapter 11 Change Summary
ODCM Revision 2.0, April 1999

Page or Section	Change Description
11-6	Sediment sample location Q-28, which was located 3.3 miles SSW of the liquid discharge point has been deleted and replaced by a new location, Q-39, which is located 0.8 miles SSW of the liquid discharge point. This point was moved based on a SNO concern at LaSalle County Station that their sediment location was too far away from the discharge point to provide any useful data. The requirement is to have the sample point within 6.2 miles.

Quad Cities Station
Chapter 11 Change Summary
ODCM Revision 2.1, September 1999

Page or Section	Change Description
11 i	Updated revision number.
11-2	Editorial change to clarify that the radioiodine canisters are changed out bi-weekly. Section 12.5 of the ODCM describes the generic requirements for the REMP program. This section describes the bi-weekly change out of the radioiodine canisters. QCNPS is sampling the radioiodine canisters bi-weekly.
11-7	Editorial change clarify that Food Products are collected once annually. Section 12.5 of the ODCM describes the generic requirements for the REMP program. This section directs that food products be sampled once per year. QCNPS is sampling food products once per year.
11-9	Changed Figure 11-1 to delete TLD's Q-207-2 and Q-209-2.Sampling. The following Outer Ring TLD locations have been deleted due to the fact that they are not required. It is required that there is one TLD in each of the sixteen sectors per the generic requirements described in section 12.5 of the ODCM. After deletion of these two TLD locations, there will be two locations in each sector: Q-207-2 Q-209-2

CHAPTER 11

Quad Cities Annex Revision 2.1

CHAPTER 11
RADIOLOGICAL ENVIRONMENTAL MONITORING PROGRAM

Table of Contents

PAGE

Radiological Environmental Monitoring Program
11-1

List of Tables

NUMBER	TITLE	PAGE
11-1	Radiological Environmental Monitoring Program	11-2

List of Figures

NUMBER	TITLE	PAGE
11-1	Fixed Air Sampling Sites and Outer Ring TLD Locations	11-9
11-2	Inner Ring TLD Locations 11-10	
11-3	Milk, Fish, Water, and Sediment Sample Locations	11-11

CHAPTER 11

Radiological Environmental Monitoring Program

The radiological environmental monitoring program for the environs around Quad Cities Station is presented in Table 11-1. Figures 11-1 through 11-3 show sampling locations and monitoring locations.

As part of the recent Technical Specification upgrade, the specifications which govern the Quad Cities Radiological Environmental Monitoring Program (REMP) were removed from the Technical Specifications and relocated within the Quad Cities Chapter 11 and 12 of the ODCM. Quad Cities Station will implement the Uniform Radiological Environmental Monitoring Program, which is described in Chapter 12 of the ODCM and detailed in this Chapter within Table 11-1, during the first sampling period of 1999. Figures generally denoting Quad Cities Station sample locations are contained herein. (Figures 11-1, 11-2, and 11-3).

Table 11-1

Radiological Environmental Monitoring Program

Exposure Pathway and/or Sample	Sample or Monitoring Location	Sampling or Collection Frequency	Type and Frequency of Analysis
1. Airborne Radioiodine and Particulates	a. Indicators-Near Field Q-01 Onsite No. 1 0.5 mi N (0.8 km A) Q-02 Onsite No. 2 0.4 mi ENE (0.7 km D) Q-03 Onsite No. 3 0.6 mi S (1.0 km J) Q-04 Nitrin 1.7 mi NE (2.7 km C) b. Indicators-Far Field Q-37 Meredosia Road 4.4 mi ENE (7.1 km D) Q-38 Fuller Road 4.7 mi E (7.6 km E) Q-13 Princeton 4.7 mi SW (7.6 km L) Q-16 Low Moor 5.7 mi NNW (9.2 km R) c. Control Q-7 Clinton 8.9 mi NE (14.3 km C)	Continuous sampler operation with sample collection weekly, or more frequently if required by dust loading.	Radioiodine Canisters: I-131 analysis bi-weekly on near field and control samples[1]. Particulate Sampler: Gross beta analysis following weekly filter change[2] and gamma isotopic analysis[3] quarterly on composite filters by location on near field and control samples.

Table 11-1 (Con't)
Radiological Environmental Monitoring Program

Exposure Pathway and/or Sample	Sample or Monitoring Location	Sampling or Collection Frequency	Type and Frequency of Analysis
2. Direct Radiation	a. Indicators-Inner Ring* Q-101-1, 0.6 mi N (0.9 km A) Q-101-2, 0.9 mi N (1.4 km A) Q-102-1, 1.3 mi NNE (2.2 km B) Q-102-3, 1.4 mi NNE (2.3 km B) Q-103-1, 1.2 mi NE (1.9 km C) Q-103-2, 1.2 mi NE (1.9 km C) Q-104-1, 1.1 mi ENE (1.9 km D) Q-104-2, 0.9 mi ENE (1.4 km D) Q-105-1, 0.8 mi E (1.2 km E) Q-105-2, 0.8 mi E (1.2 km E) Q-106-2, 0.7 mi ESE (1.1 km F) Q-106-3, 0.7 mi ESE (1.2 km F) Q-107-2, 0.7 mi SE (1.2 km G) Q-107-3, 0.8 mi SE (1.2 km G) Q-108-1, 1.0 mi SSE (1.5 km H) Q-108-2, 0.9 mi SSE (1.4 km H) Q-109-1, 0.9 mi S (1.4 km J) Q-109-2, 1.2 mi S (1.9 km J) Q-111-1, 2.6 mi SW (4.2 km L) Q-111-2, 2.5 mi SW (4.0 km L) Q-112-1, 2.5 mi WSW (4.0 km M) Q-112-2, 2.2 mi WSW (3.6 km M) Q-113-1, 2.5 mi W (4.1 km N) Q-113-2, 2.5 mi W (4.1 km N) Q-114-1, 2.1 mi WNW (3.5 km P) Q-114-2, 2.5 mi WNW (4.0 km P) Q-115-1, 2.6 mi NW (4.2 km Q) Q-115-2, 2.3 mi NW (3.6 km Q) Q-116-1, 2.3 mi NNW (3.7 km R) Q-116-3, 2.4 mi N (3.9 km R) * = Inner Ring TLDs are not placed within sector K because of the river at this range.	Quarterly	Gamma dose on each TLD quarterly

Table 11-1 (Con't)
Radiological Environmental Monitoring Program

Exposure Pathway and/or Sample	Sample or Monitoring Location	Sampling or Collection Frequency	Type and Frequency of Analysis
2. Direct Radiation (Cont'd)	b. Indicators-Outer Ring Q-201-1, 4.2 mi N (6.7 km A) Q-201-2, 4.2 mi N (6.7 km A) Q-202-1, 4.4 mi NNE (7.0 km B) Q-202-2, 4.8 mi NNE (7.7 km B) Q-203-1, 4.7 mi NE (7.5 km C) Q-203-2, 5.0 mi NE (8.0 km C) Q-204-1, 4.7 mi ENE (7.5 km D) Q-204-2, 4.5 mi ENE (7.2 km D) Q-205-1, 4.7 mi E (7.5 km E) Q-205-4, 4.8 mi E (7.7 km E) Q-206-1, 4.8 mi ESE (7.7 km F) Q-206-2, 4.8 mi ESE (7.7 km F) Q-207-1, 4.7 mi SE (7.6 km G) Q-207-4, 4.7 mi SE (7.6 km G) Q-208-1, 4.3 mi SSE (6.8 km H) Q-208-2, 4.9 mi SSE (7.9 km H) Q-209-1, 4.7 mi S (7.6 km J) Q-209-4, 4.7 mi S (7.6 km J) Q-210-1, 4.1 mi SSW (6.5 km K) Q-210-4, 4.1 mi SSW (6.5 km K) Q-211-1, 4.5 mi SW (7.3 km L) Q-211-2, 4.5 mi SW (7.3 km L) Q-212-1, 5.4 mi WSW (8.7 km M) Q-212-2, 4.4 mi WSW (7.2 km M) Q-213-1, 4.3 mi W (6.9 km N) Q-213-2, 4.8 mi W (7.8 km N) Q-214-1, 4.7 mi WNW (7.5 km P) Q-214-2, 4.4 mi WNW (7.1 km P) Q-215-1, 5.0 mi NW (8.0 km Q) Q-215-2, 4.2 mi NW (6.7 km Q) Q-216-1, 4.6 mi NNW (7.4 km R) Q-216-2, 4.3 mi NNW (7.0 km R)		

Table 11-1 (Con't)

Radiological Environmental Monitoring Program

Exposure Pathway and/or Sample	Sample or Monitoring Location	Sampling or Collection Frequency	Type and Frequency of Analysis
2. Direct Radiation (Cont'd)	c. Other Indicators One at each of the airborne location given in part 1.a and 1.b. Q-301-1, Public Observation Tower d. Controls One at each airborne control location given in part 1.c.		
3. Waterborne			
a. Ground/Well	a. Indicators Q-35, McMillan Well 1.5 mi S(2.4 km J) Q-36, Cordova Well 3.3 mi SSW (5.3 km K)	Quarterly	Gamma isotopic[3] and tritium analysis quarterly.
b. Drinking Water	a. Indicator There are no drinking water pathways within 6.2 mi downstream of Station.	Weekly grab sample	Gross beta and gamma isotopic analysis[3] on monthly composite; tritium analysis on quarterly composite.
c. Surface Water	a. Indicator Q-33 Cordova, 3.3 mi SSW (5.3 km K)	Weekly grab sample	Gross beta and gamma isotopic analysis[3] on monthly composite; tritium analysis on quarterly composite.

Table 11-1 (Con't)

Radiological Environmental Monitoring Program

Exposure Pathway and/or Sample	Sample or Monitoring Location	Sampling or Collection Frequency	Type and Frequency of Analysis
3. Waterborne (Con't)			
d. Control	a. Control Q-34 Camanche 4.4 NNE (7.1 km C)	Weekly grab sample	Gross beta and gamma isotopic analysis[3] on monthly composite; tritium analysis on quarterly composite.
e. Sediments	a. Indicators Q-39 Cordova, Downstream on Mississippi River 0.8 mi SSW (1.3 km K)	Semiannually	Gamma isotopic analysis[3] semiannually.
4. Ingestion			
a. Milk	a. Indicators Q-26 Bill Stanley Dairy, 3.5 mi ESE (4.8 km F) There are no other participating dairies within 6.2 miles. b. Controls There are no control dairies within 9.3 to 18.6 miles.	Biweekly: May through October or monthly: November through April	Gamma isotopic[3] and I-131 analysis[4] biweekly May through October, monthly November through April.

Rev. 2.0 April 99

Table 11-1 (Con't)

Radiological Environmental Monitoring Program

Exposure Pathway and/or Sample	Sample or Monitoring Location	Sampling or Collection Frequency	Type and Frequency of Analysis
b. Fish	a. Indicator Q-24 Pool #14 of Miss. River, 0.5 mi SW (0.8 km L) b. Control Q-29 Missippi River-Upstream 1.0 mi N (1.6 kmA)	Two times annually	Gamma isotopic analysis[3] on edible portions
c. Food Products	a. Indicators Two sample locations from each of the four major quandrants within 6.2 mi. Sample locations for food products may vary based on availability and therefore are not required to be identified here but shall be taken. b. Controls Two samples grown within 9.3 to 18.6 mi.	Once annually.	Gamma isotopic analysis[3] on edible portions.

Table 11-1 (Con't)

Radiological Environmental Monitoring Program

---

1 Far field samples are analyzed when near field results are inconsistent with previous measurements and radioactivity is confirmed as having its origin in airborne effluents released from the station, or at the discretion of the Health Physics Support Supervisor.

2 Airborne particulate sample filters shall be analyzed for gross beta radioactivity 24 hours or more after sampling to allow for radon and thoron daughter decay. If gross beta activity in air particulate samples is greater than 10 times the yearly mean of control samples, gamma isotopic analysis shall be performed on the individual samples.

3 Gamma isotopic analysis means the identification and quantification of gamma emitting radionuclides that may be attributable to the effluents from the station.

4 I-131 analysis means the analytical separation and counting procedure are specific for this radionuclide.

Figure 11-1

Quad Cities Outer Ring TLD's
and Air Sampling Sites

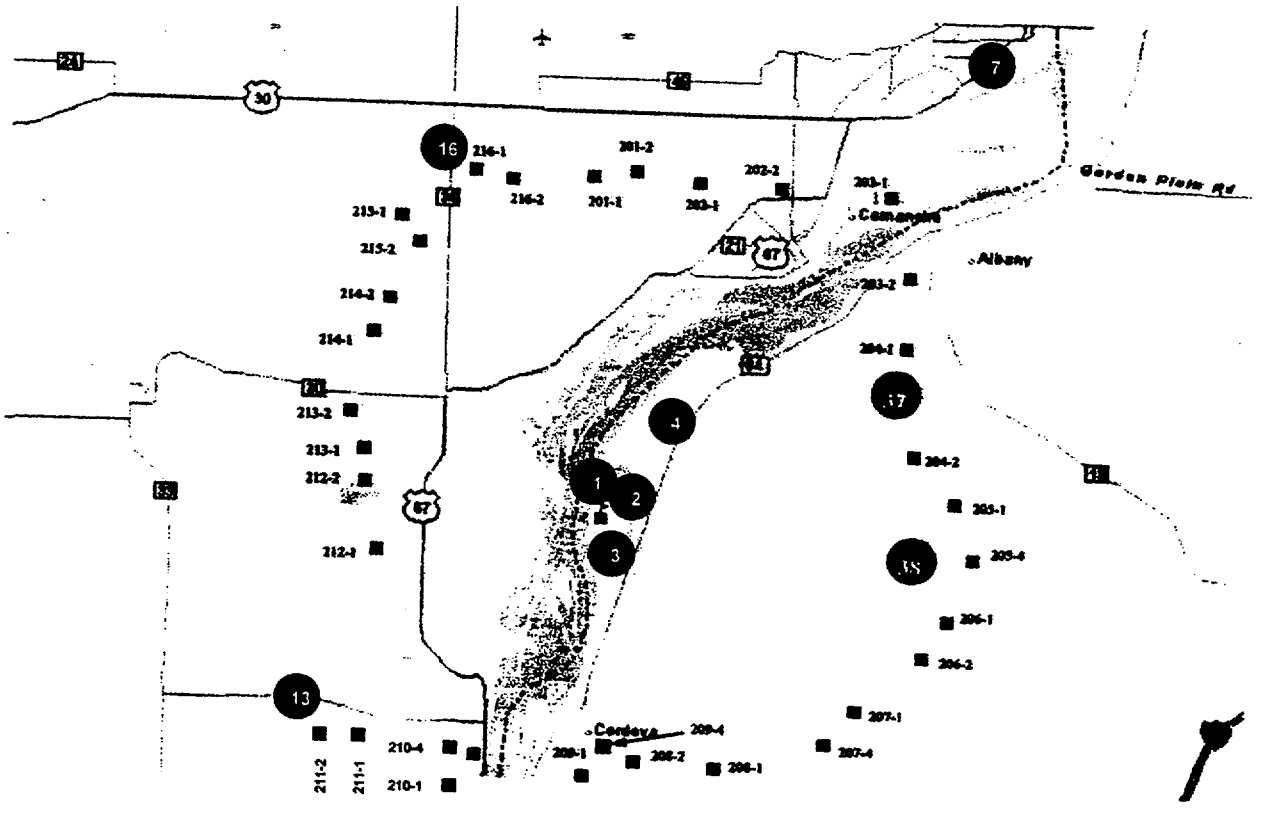

● = Air Sampling Sites

■ = Outer Ring TLD Locations

Figure 11-2

Quad Cities Inner Ring TLD Locations

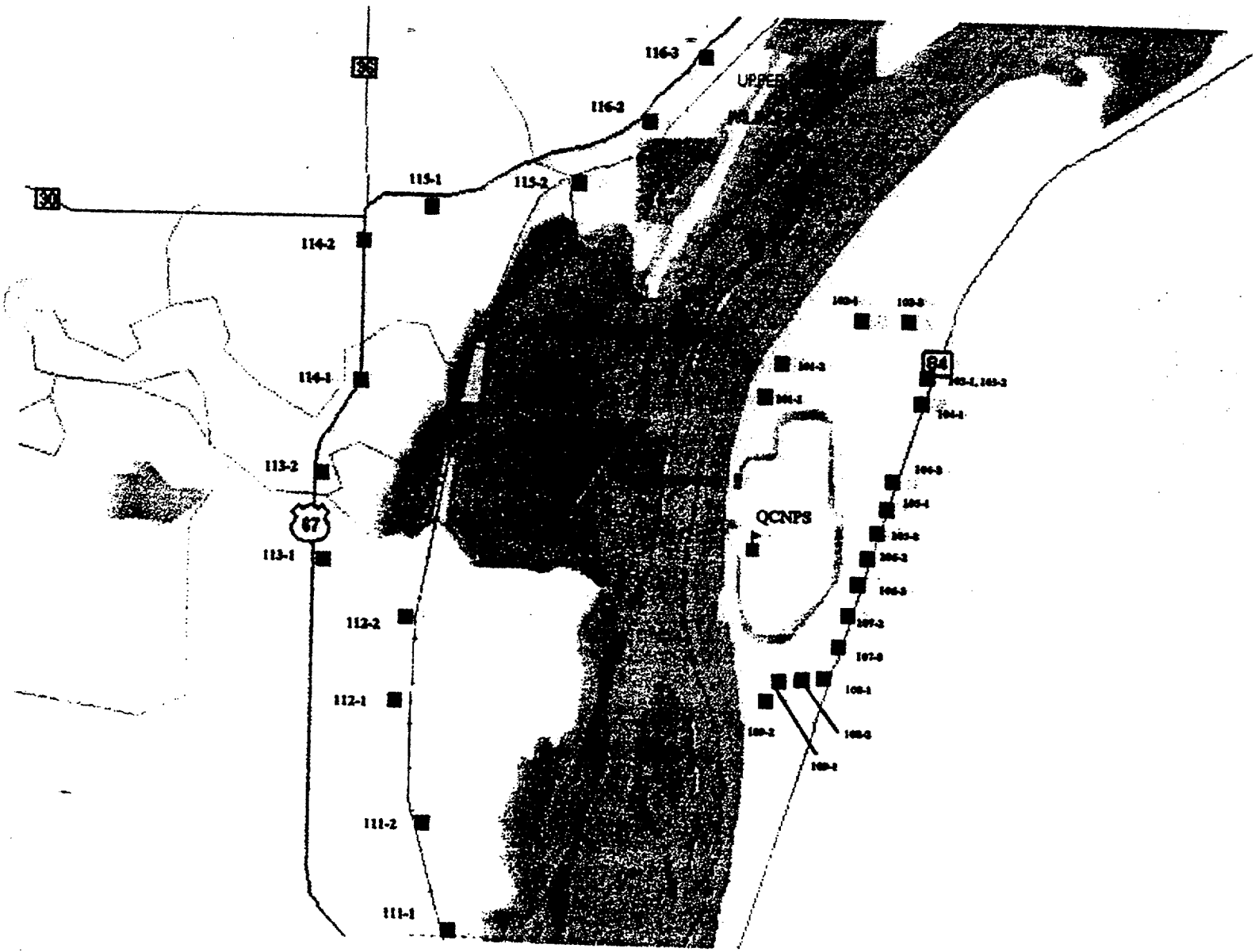

Figure 11-3

Milk, Fish, Water and Sediment Sampling Locations

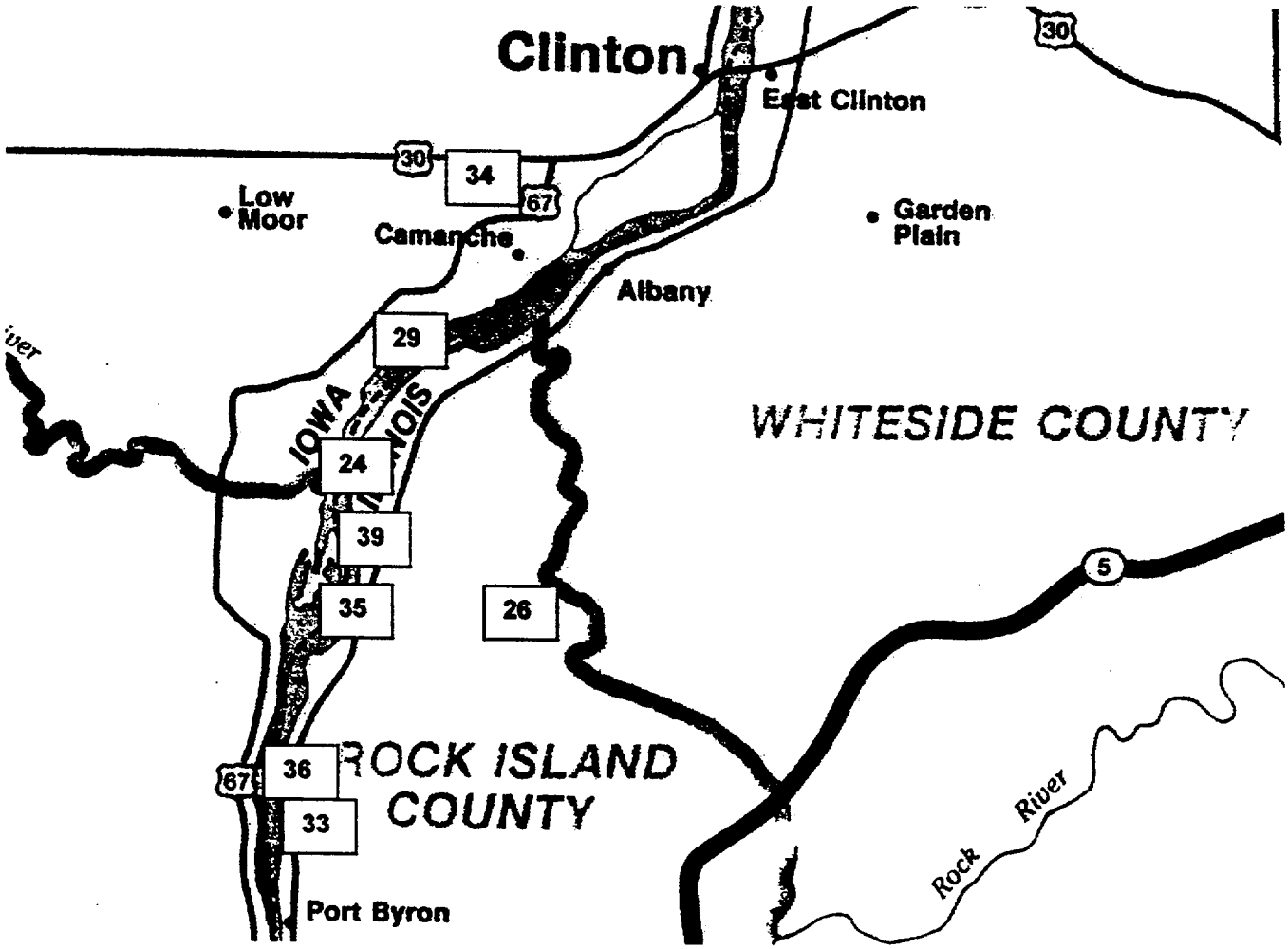

XX = Milk, Fish, Water and Sediment Sample Locations

Quad Cities Station
Chapter 12 Change Summary
ODCM Revision 2.0, September 1999

Page or Section	Change Description
12-52 thru 12-53	Editorial change. There were some minor word processing formatting errors in the previous revision.

CHAPTER 12

Quad Cities Annex Index

Revision 2.0

CHAPTER 12

RADIOACTIVE EFFLUENT TECHNICAL STANDARDS (RETS)

Table of Contents

		PAGE
12.0	RADIOACTIVE EFFLUENT TECHNICAL STANDARDS	12-1
12.1	DEFINITIONS	12-4
12.2	INSTRUMENTATION	12-9
	1. Radioactive Liquid Effluent Instrumentation	12-9
	2. Radioactive Gaseous Effluent Instrumentation	12-12
12.3	LIQUID EFFLUENTS	12-17
	1. Concentration	12-17
	2. Dose	12-21
	3. Liquid Radwaste Treatment System	12-23
12.4	GASEOUS EFFLUENTS	12-24
	1. Dose Rate	12-24
	2. Dose-Noble Gases	12-27
	3. Dose-Radioiodine-131 and 133, Tritium and Radionuclides in Particulate Form	12-29
	4. Off-Gas System	12-31
	5. Total Dose	12-33
	6. Dose Limits for Members of the Public	12-35
12.5	RADIOLOGICAL ENVIRONMENTAL MONITORING PROGRAM	12-36
	1. Monitoring Program	12-36
	2. Land Use Census	12-49
	3. Interlaboratory Comparison Program	12-50
12.6	REPORTING REQUIREMENTS	12-51
	1. Radioactive Effluent Release Report	12-51
	2. Annual Radiological Environmental Operating Report	12-52
	3. Offsite Dose Calculation Manual (ODCM)	12-53
	4. Major Changes to Radioactive Waste Treatment Systems (Liquid and Gaseous)	12-54

CHAPTER 12

RADIOACTIVE EFFLUENT TECHNICAL STANDARDS (RETS)

LIST OF TABLES

NUMBER	TITLE	PAGE
12.0-1	Effluent Compliance Matrix	12-2
12.0-2	REMP Compliance Matrix	12-3
12.1-1	Surveillance Frequency Notation	12-7
12.1-2	Operational Modes	12-8
12.2-1	Radioactive Liquid Effluent Monitoring Instrumentation	12-10
12.2-2	Radioactive Liquid Effluent Monitoring Instrumentation Surveillance Requirements	12-11
12.2-3	Radioactive Gaseous Effluent Monitoring Instrumentation	12-13
12.2-4	Radioactive Gaseous Effluent Monitoring Instrumentation Surveillance Requirements	12-15
12.3-1	Allowable Concentration (AC) of Dissolved or Entrained Noble Gases Release from the Site to Unrestricted Areas in Liquid Waste	12-18
12.3-2	Radioactive Liquid Waste Sampling and Analysis Program	12-19
12.4-1	Radioactive Gaseous Waste Sampling and Analysis Program	12-25
12.5-1	Radiological Environmental Monitoring Program	12-39
12.5-2	Reporting Levels for Radioactivity Concentrations In Environmental Samples	12-45
12.5-3	Detection Capabilities for Environmental Sample Analysis	12-46

12.0 RADIOLOGICAL EFFLUENT TECHNICAL STANDARDS

Chapter 12 of the Quad Cities Station ODCM is a compilation of the various regulatory requirements, surveillance and bases, commitments and/or components of the radiological effluent and environmental monitoring programs for Quad Cities Station. To assist in the understanding of the relationship between effluent regulations, ODCM equations, RETS (Chapter 12 section) and related Technical Specification requirements, Table 12.0-1 is a matrix which relates these various components. The Radiological Environmental Monitoring Program fundamental requirements are contained within this chapter, with Quad Cities specific information in Chapter 11 and with a supplemental matrix in Table 12.0-2.

Table 12.0-1

EFFLUENT COMPLIANCE MATRIX

Regulation	Dose Component Limit	ODCM Equation	RETS	Technical Specification
10 CFR 50 Appendix I	1. Gamma air dose and beta air dose due to airborne radioactivity in effluent plume.	A-1 A-2	12.4.2	6.8.D.4.h
	a. Whole body and skin dose due to airborne radioactivity in effluent plume are reported only if certain gamma and beta air dose criteria are exceeded.	A-6 A-7	N/A	N/A
	2. CDE for all organs and all four age groups due to iodines and particulates in effluent plume. All pathways are considered.	A-13	12.4.3	6.8.D.4.l
	3. CDE for all organs and all four age groups due to radioactivity in liquid effluents.	A-29	12.3.2	6.8.D.4.d
10 CFR 20	1. TEDE, totaling all deep dose equivalent components (direct, ground and plume shine) and committed effective dose equivalents (all pathways, both airborne and liquid-borne). CDE evaluation is made for adult only using FGR 11 data base.	A-38	12.4.6	6.8.D.4.c
40 CFR 190 (now by reference, also part of 10 CFR 20)	1. Whole body dose (DDE) due to direct dose, ground and plume shine from all sources at a station.	A-35	12.4.5	6.8.D.4.j
	2. Organ doses (CDE) to an adult due to all pathways.	A-13		
Technical Specifications	1. "Instantaneous" whole body (DDE), skin (SDE), and organ (CDE) dose rates to an adult due to radioactivity in airborne effluents. For the organ dose, only inhalation is considered.	A-8 A-9 A-28	12.4.1	6.8.D.4.g
	2. "Instantaneous" concentration limits for liquid effluents.	A-32	12.3.1	6.8.D.4.b
Technical Specifications	1. Radiological Effluent Release Report	NA	12.6.2	6.9.A.4

Table 12.0-2

REMP Compliance Matrix

Regulation	Component	RETS	Technical Specification
10CFR50 Appendix I Section IV.B.2 and Technical Specifications	Implement environmental monitoring program.	12.5.1	N/A
10CFR50 Appendix I Section IV.B.3 and Technical Specifications	Land Use Census	12.5.2	N/A
Technical Specifications	Interlaboratory Comparison Program	12.5.3	N/A
10CFR50 Appendix I Section IV.B.2 and Technical Specifications	Radiological Environmental Operating Report	12.6.1	6.9.A.3

12.1 DEFINITIONS

1. Channel Calibration - A Channel Calibration shall be the adjustment, as necessary, of the Channel output such that it responds with the necessary range and accuracy to known values of the parameter which the Channel monitors. The Channel Calibration shall encompass the entire Channel including the sensor and alarm and/or trip functions, and shall include the Channel Functional Test. The Channel Calibration may be performed by any series of sequential, overlapping or total Channel steps such that the entire Channel is calibrated.

2. Channel Check - A Channel Check shall be the qualitative assessment of Channel behavior during operation by observation. This determination shall include, where possible, comparison of the Channel indication and/or status with other indications and/or status derived from independent instrument Channels measuring the same parameter.

3. Channel Function Test - A Channel Functional Test shall be:

   a. Analog Channels - the injection of a simulated signal into the Channel as close to the sensor as practicable to verify Operability including alarm and/or trip functions and Channel failure trips.

   b. Bistable Channels - the injection of a simulated signal into the sensor to verify Operability including alarm and/or trip functions.

   The Channel Functional Test may be performed by any series of sequential, overlapping or total Channel steps such that the entire Channel is tested.

4. Dose Equivalent I-131 - Dose Equivalent I-131 is that concentration of I-131 (microcurie/ gram) which alone would produce the same thyroid dose as the quantity and isotopic mixture of I-131, I-132, I-133, I-134, and I-135 actually present. The thyroid dose conversion factors used for this calculation shall be those listed in Table III of TID-14844, "Calculation of Distance Factors For Power and Test Reactor Sites."

5. Frequency - Table 12.1-1 provides the definitions of various frequencies for which surveillance, sampling, etc. are performed unless defined otherwise. (The bases to Upgraded Technical Specification 4.0.B provides clarifications to this requirement.)

6. Immediate - Immediate means that the required action will be initiated as soon as practicable considering the safe operation of the unit and the importance of the required action.

7. Member(s) of the Public - Member(s) of the Public means any individual except when that individual is receiving an occupational dose.

8. Mode-Reactor modes are described in Table 12.1-2.

9. Occupational Dose-Occupational dose means the dose received by an individual in the course of employment in which the individual's assigned duties involve exposure to radiation and/or to radioactive material from licensed and unlicensed sources of radiation, whether in the possession of the licensee or other person. Occupational dose does not include dose from background radiation, as a patient from medical practices, from voluntary participation in medical research programs, or as a member of the public.

10. Offsite Dose Calculation Manual (ODCM) - The Offsite Dose Calculation Manual shall contain the methodology and parameters used in the calculation of offsite doses resulting from radioactive gaseous and liquid effluents, in the calculation of gaseous and liquid effluent monitoring Alarm/Trip Setpoints, and in the conduct of the Radiological Environmental Monitoring Program. The ODCM shall also contain (1) the Radioactive Effluent Controls and Radiological Environmental Monitoring Programs required by Sections 12-5 and (2) descriptions of the information that should be included in the Radioactive Effluent Release Reports and in the Annual Radiological Environmental Operating Reports required by Sections 12.6.2.1 and 12.6.2.2.

11. Operable - Operability - A system, subsystem, train, component, or device shall be Operable or have Operability when it is capable of performing its specified function(s). Implicit in this definition shall be the assumption that is necessary attendant instrumentation, controls, normal and emergency electrical power sources, cooling or seal water, lubrication or other auxiliary equipment that are required for the system, subsystem, train, component or device to perform its function(s) are also capable of performing their related support function(s).

12. Operating - Operating means that a system, subsystem, train, component or device is performing its intended functions in its required manner.

13. Operating Cycle - Operating Cycle is the interval between the end of one Refueling Outage for a particular unit and the end of the next subsequent Refueling Outage for the same unit.

14. Process Control Program (PCP) - The Process Control Program shall contain the current formulas, sampling, analyses, test, and determinations to be made to ensure that processing and packaging of solid radioactive wastes based on demonstrated processing of actual or simulated wet solid wastes will be accomplished in such a way as to assure compliance with 10CFR Parts 20, 61, and 71, State regulations, burial ground requirements, and other requirements governing the disposal of solid radioactive waste.

15. Protective Instrumentation Definitions - Protective instrumentation definitions are as follows:

    a. Channel - A Channel is an arrangement of a sensor and associated components used to evaluate plant variables and produce discrete outputs used in logic. A Channel terminates and loses its identity where individual Channel outputs are combined in a logic.

    b. Trip System - A Trip System means an arrangement of instrument Channel trip signals and auxiliary equipment required to initiate action to accomplish a protective trip function. A Trip System may require one or more instrument Channel trip signals related to one or more plant parameters in order to initiate Trip System action. Initiation of Protective Action may require the tripping of a single Trip System or the coincident tripping of two Trip Systems.

    c. Protective Action - An action initiated by the protection system when a limit is reached. A Protective Action can be at the Channel or system level.

    d. Protective Function - A system protective action which results form the Protective Action of the Channels monitoring a particular plant condition.

16. Rated Thermal Power - Rated Thermal Power means a steady- state power level of 2511 thermal megawatts.

17. Reactor Power Operation - Reactor Power Operation is any operation with the mode switch in the Startup/Hot Standby or Run position with the reactor critical and above 1% Rated Thermal Power.

18. Reactor Vessel Pressure - Reactor Vessel Pressures listed in the Technical Specifications, unless otherwise indicated, are those measured by the reactor vessel steam space detector.

19. Refueling Outage - Refueling Outage is the period of time between the shutdown of the unit prior to a refueling and startup of the plant subsequent to that refueling. For the purpose of designating frequency of testing and surveillance, a Refueling Outage shall mean a regularly scheduled Refueling Outage; however, where such outages occur within 8 months of the completion of the previous Refueling Outage, the required surveillance testing need not be performed until the next regularly scheduled outage.

20. Site Boundary - Site Boundary shall be that line beyond which the land is neither owned, nor leased, nor otherwise controlled by the licensee.

21. Unrestricted Area - Unrestricted Area means an area, access to which is neither limited nor controlled by the licensee.

22. Source Check - Source Check is the qualitative assessment of instrument response when the sensor is exposed to a radioactive source.

23. Definitions Related to Estimating Dose to the Public Using the Appendix I Computer Program:

    a. Actual - Refers to using known release data to project the dose to the public for the previous month. This data is stored in the database and used to demonstrate compliance with the reporting requirements of Chapter 12.

    b. Projected - Refers to using known release data from the previous month or estimated release data to forecast a future dose to the public. This data is NOT incorporated into the database.

TABLE 12.1-1

SURVEILLANCE FREQUENCY NOTATION

NOTATION		FREQUENCY *
S	(Shiftly)	At least once per scheduled shift
D	(Daily)	At least once per 24 hours
W	(Weekly)	At least once per 7 days
M	(Monthly)	At least once per 31 days
Q	(Quarterly)	At least once per 92 days
SA	(Semiannually)	At least once per 184 days
A	(Annually)	At least once per 366 days
E	(Sesquiannually)	At least once per 18 months (550 days)
S/U	(Startup)	Prior to reactor startup
NA	(Not Applicable)	Not Applicable

* Each Surveillance Requirement shall be performed within the specified time interval with a maximum allowable extension not to exceed 25% of the surveillance interval. The bases to Upgraded Technical Specification 4.0.B provides clarifications to this statement. These definitions do not apply to the Radiological Environmental Monitoring Program (Section 12.5).

TABLE 12.1-2

OPERATIONAL MODES

MODE	MODE SWITCH POSITION[f]	AVERAGE REACTOR COOLANT TEMPERATURE
1. POWER OPERATION	Run	Any temperature
2. STARTUP	Startup/Hot Standby	Any temperature
3. HOT SHUTDOWN	Shutdown[a,e]	> 212°F
4. COLD SHUTDOWN	Shutdown[a,b,e]	≤212°F
5. REFUELING[c]	Shutdown or Refuel[a,d]	≤ 140°F

TABLE NOTATIONS

(a) The reactor mode switch may be placed in the Run or Startup/Hot Standby position to test the switch interlock functions provided the control rods are verified to remain fully inserted by a second licensed operator or other technically qualified individual.

(b) The reactor mode switch may be placed in the Refuel position while a single control rod drive is being removed from the reactor pressure vessel per Technical Specification 3.10.I.

(c) Fuel in the reactor vessel with one or more vessel head closure bolts less than fully tensioned or with the head removed.

(d) See Technical Specification Special Test Exceptions 3.12.A and 3.12.B.

(e) The reactor mode switch may be placed in the Refuel position while a single control rod is being recoupled or withdrawn provided the one-rod-out interlock is OPERABLE.

(f) When there is no fuel in the reactor vessel, the reactor is considered not to be in any OPERATIONAL MODE. The reactor mode switch may then be in any position or may be inoperable.

12.2 INSTRUMENTATION

12.2.1 Radioactive Liquid Effluent Instrumentation

Operability Requirements

12.2.1.A The effluent monitoring instrumentation shown in Table 12.2-1 shall be OPERABLE with alarm setpoints set to ensure that the limits of 12.3.1.A are not exceeded. The alarm setpoints shall be determined in accordance with the ODCM.

Applicability: Applies to radioactive effluents from the plant.

Action:

1. With a radioactive liquid effluent monitoring instrument alarm/trip setpoint less conservative than required, without delay suspend the release of radioactive liquid effluents monitored by the affected instrument, or declare the instrument inoperable, or change the setpoint so it is acceptably conservative.

2. With one or more radioactive liquid effluent monitoring instruments INOPERABLE, take the ACTION shown in Table 12.2-1. Exert best efforts to return the instrument to operable status within 30 days and, if unsuccessful, explain in the next Radioactive Effluent Release Report why the inoperability was not corrected in a timely manner.

3. In the event a limiting condition for operation and associated action requirements cannot be satisfied because of circumstances in excess of those addressed in the specifications, provide a 30-day written report to the NRC and no changes are required in the operational condition of the plant, and this does not prevent the plant from entry into an operational mode.

Surveillance Requirements

12.2.1.B Each radioactive liquid effluent monitoring instrument shown in Table 12.2-2 shall be demonstrated operable by performance of the given source check, instrument check, calibration, and functional test operations at the frequencies shown in Table 12.2-2.

Applicability: Applies to the periodic measurements of radioactive effluents.

Bases

12.2.1.C The radioactive liquid effluent instrumentation is provided to monitor the release of radioactive materials in liquid effluents during releases. The alarm setpoints for the instruments are provided to ensure that the alarms will occur prior to exceeding the limits of RETS and 10 CFR 20.

TABLE 12.2-1

RADIOACTIVE LIQUID EFFLUENT MONITORING INSTRUMENTATION

Minimum No. of Operable Channels	Total No. of Channels	Parameter	Action[1]
1	1	Service Water Effluent Gross Activity Monitor	A
1	1	Liquid Radwaste Effluent Flow Rate Monitor	C
1	1	Liquid Radwaste Effluent Gross Activity Monitor	B

[1] Notes

Action A: With less than the minimum number of operable channels, releases via this pathway may continue, provided that at least once per 12 hours grab samples are collected and analyzed for beta or gamma activity at an LLD of less than or equal to 10^{-7} μCi/ml.

Action B: With less than the minimum number of operable channels, effluent releases via this pathway may continue, provided that prior to initiating a release, at least 2 independent samples are analyzed in accordance with Section 12.3.A.1, and at least 2 members of the facility staff independently verify the release calculation and discharge valving. Otherwise, suspend release of radioactive effluents via this pathway.

Action C: With less than the minimum number of operable channels, releases via this pathway may continue, provided the flow rate is estimated at least once per 4 hours during actual releases. Pump curves may be utilized to estimate flow.

TABLE 12.2-2

RADIOACTIVE LIQUID EFFLUENT MONITORING INSTRUMENTATION SURVEILLANCE REQUIREMENTS

Instrument	Instrument Check(1)	Calibration(1)(3)	Functional Test(1)(2)	Source Check(1)
Liquid Radwaste Effluent Gross Activity Monitor	D	E	Q (7)	(5)(6)
Service Water Effluent Gross Activity Monitor	D	E	Q (7)	(5)
Liquid Radwaste Effluent Flow Rate Monitor	(4)	E	NA	NA

Notes

(1) D = once per 24 hours
Q = once per 92 days
E = once per 18 months (550 days)

(2) The Instrument Functional Test shall also demonstrate that control room alarm annunciation occurs, if any of the following conditions exist, where applicable.

a. Instrument indicates levels above the alarm setpoints.
b. Circuit failure.
c. Instrument indicates a downscale failure.
d. Instrument controls not set in OPERATE mode.

(3) Calibration shall include performance of a functional test.

(4) Instrument Check to verify flow during periods of release.

(5) Calibration shall include performance of a source check.

(6) Source check shall consist of observing instrument response during a discharge.

(7) Functional test may be performed by using trip check and test circuitry associated with the monitor chassis.

12.2 INSTRUMENTATION

12.2.2 Radioactive Gaseous Effluent Instrumentation

Operability Requirement

12.2.2.A The effluent monitoring instrumentation shown in Table 12.2-3 shall be OPERABLE with alarm/trip setpoints set to ensure that the limits of Section 12.4 are not exceeded. The alarm/trip setpoints shall be determined in accordance with the ODCM.

Applicability: As shown in Table 12.2-3.

Action:

1. With a radioactive gaseous effluent monitoring instrument alarm/trip set point less conservative than required, without delay suspend the release of radioactive gaseous effluents monitored by the affected instrument, or declare the instrument inoperable, or change the setpoint so it is acceptably conservative.

2. With one or more radioactive gaseous effluent monitoring instruments inoperable, take the action shown in Table 12.2-3. Exert best efforts to return the instrument to operable status within 30 days and, if unsuccessful, explain in the next Semi-Annual Radioactive Effluent Release Report why the inoperability was not corrected in a timely manner. This is in lieu of an LER.

3. In the event a limiting condition for operation and associated action requirement cannot be satisfied because circumstances in excess of those addressed in the specifications, provide a 30-day written report to the NRC and no changes are required in the operational condition of the plant, and this does not prevent the plant from entry into an operational mode.

Surveillance Requirements

12.2.2.B Each radioactive gaseous radiation monitoring instrument in Table 12.2-4 shall be demonstrated operable by performance of the given source check, instrument check, calibration, and functional test operations at the frequency shown in Table 12.2-4.

Bases

12.2.2.C The radioactive gaseous effluent instrumentation is provided to monitor the release of radioactive materials in gaseous effluents during releases. The alarm setpoints for the instruments are provided to ensure that the alarms will occur prior to exceeding the limits of RETS and 10 CFR 20.

TABLE 12.2-3

RADIOACTIVE GASEOUS EFFLUENT MONITORING INSTRUMENTATION

Minimum No. of Operable Channels[1]	Total No. of Channels	Parameter	Action [2]
1	2	SJAE Radiation Monitors	D
1	2	Main Chimney Noble Gas Activity Monitor	A
1	1	Main Chimney Iodine Sampler	C
1	1	Main Chimney Particulate Sampler	C
1	1	Reactor Bldg. Vent Sampler Flow Rate Monitor	B
1	1	Reactor Bldg. Vent Iodine Sampler	C
1	1	Reactor Bldg. Vent Particulate Sampler	C
1	1	Main Chimney Sampler Flow Rate Monitor	B
1	1	Main Chimney Flow Rate Monitor	B
1	2	Reactor Bldg. Vent Noble Gas Monitor	E
1	1	Main Chimney High Range Noble Gas Monitor	F

Notes

(1) For SJAE monitors, applicable during SJAE operation. For other instrumentation, applicable at all times.

(2) Action A: With the number of operable channels less than the minimum requirement, effluent releases via this pathway may continue, provided grab samples are taken at least once per 8 hour shift and these samples are analyzed within 24 hours.

TABLE 12.2-3 (Con't)

RADIOACTIVE GASEOUS EFFLUENT MONITORING INSTRUMENTATION

Action B: With the number of operable channels less than the minimum required, effluent releases via this pathway may continue provided that the flow rate is estimated at least once per 4 hours.

Action C: With less than the minimum channels operable, effluent releases via this pathway may continue provided samples are continuously collected with auxiliary sampling equipment, as required in Table 12.4-1.

Action D: With less than the minimum channels operable, gases from the main condenser off gas system may be released to the environment for up to 72 hours provided at least one chimney monitor is operable; otherwise, be in STARTUP in 12 hours.

Action E: With less than the minimum channels operable, immediately suspend release of radioactive effluents via this pathway.

Action F: With less than the minimum channels operable, initiate the preplanned alternate method of monitoring the appropriate parameter(s) within 72 hours, and:

(1) either restore the inoperable channel(s) to operable status within 7 days of the event, or

(2) prepare and submit a Special Report to the Commission within 30 days following the event outlining the action taken, the cause of the inoperability and the plans and schedule for restoring the system to operable status.

TABLE 12.2-4

RADIOACTIVE GASEOUS EFFLUENT MONITORING INSTRUMENTATION SURVEILLANCE REQUIREMENTS

Instrument	Mode(2)	Instrument Check(1)	Calibra-tion(1)(4)	Functional Test(1)(3)	Source Check(1)
Main Chimney Noble Gas Activity Monitor	B	D	E	Q	M
Main Chimney Sampler Flow Rate Monitor	B	D	E	Q[6]	NA
Reactor Bldg. Vent Sampler Flow Rate Monitor	B	D	E	Q[6]	NA
Main Chimney Flow Rate Monitor	B	D	E	NA	NA
Reactor Bldg Vent Activity Monitor	B	D	E	Q	Q
SJAE	A	D	E	Q	E
Main Chimney Iodine and Particulate Sampler	B	D[5]	NA	NA	NA
Reactor Bldg. Vent Iodine and Particulate Sampler	B	D[5]	NA	NA	NA
Main Chimney High Range Noble Gas Monitor	B	D[5]	E	Q	M

Notes

(1) D = once per 24 hours
M = once per 31 days
Q = once per 92 days
E= once per 18 months (550 days)

(2) A = during SJAE operation
B = at all times

(3) The Instrument Functional Test shall also demonstrate that control room alarm annunciation occurs, if any of the following conditions exist, where applicable:

a. Instrument indicates levels above the alarm setpoint
b. Circuit failure
c. Instrument indicates a downscale failure
d. Instrument controls not set in OPERATE mode

TABLE 12.2-4 (cont'd)

RADIOACTIVE GASEOUS EFFLUENT MONITORING INSTRUMENTATION SURVEILLANCE REQUIREMENTS

(4) Calibration shall include performance of a functional test.

(5) Instrument check to verify operability of the instrument; that the instrument is in place and functioning properly.

(6) Functional test shall be performed on local switches providing low flow alarm.

12.3 LIQUID EFFLUENTS

12.3.1 Concentration

Operability Requirements

12.3.1.A. The concentration of radioactive material released from the site to unrestricted areas (at or beyond the site boundary, see Quad Cities Station ODCM Annex, Appendix F, Figure F-1) shall be limited to 10 times the concentrations specified in Appendix B, Table 2, Column 2 to 10 CFR 20.1001-20.2402 with the Table 12.3-1 values representing the AC's for noble gases.

Applicability: At all times

Action:

With the concentration of radioactive material released from the site to unrestricted areas exceeding the above limits, without delay decrease the release rate of radioactive materials and/or increase the dilution flow rate to restore the concentration to within the above limits.

Surveillance Requirements

12.3.1.B The concentration of radioactive material in unrestricted areas shall be determined to be within the prescribed limits by obtaining the representative samples in accordance with the sampling and analysis program specified in Table 12.3-2. The sample analysis results will be used with the calculational methods in the ODCM to determine that the concentrations are within the limits of Specification 12.3.A.

Bases

12.3.1.C This specification is provided to ensure that the concentration of radioactive materials released in liquid waste effluents from the site to unrestricted areas will be less than 10 times the concentration levels specified in Appendix B, Table 2, Column 2 to 10CFR20.1001 - 20.2402. The concentration limit for noble gases was converted to an equivalent concentration in water using the International Commission on Radiological Protection (ICRP) Publication 2.

TABLE 12.3-1

ALLOWABLE CONCENTRATION (AC) OF DISSOLVED OR ENTRAINED NOBLE GASES RELEASED FROM THE SITE TO UNRESTRICTED AREAS IN LIQUID WASTE

NUCLIDE	AC(μCi/ml)*
Kr-85m	$2x10^{-4}$
Kr-85	$5x10^{-4}$
Kr-87	$4x10^{-5}$
Kr-88	$9x10^{-5}$
Ar-41	$7x10^{-5}$
Xe-131m	$7x10^{-4}$
Xe-133m	$5x10^{-4}$
Xe-133	$6x10^{-4}$
Xe-135m	$2x10^{-4}$
Xe-135	$2x10^{-4}$

* Computed from Equation 20 of ICRP Publication 2 (1959), adjusted for infinite cloud submersion in water, and R = 0.01 rem/week, density = 1.0 g/cc and Pw/Pt = 1.0.

TABLE 12.3-2
RADIOACTIVE LIQUID WASTE SAMPLING AND ANALYSIS PROGRAM

LIQUID RELEASE TYPE	SAMPLING FREQUENCY	MINIMUM ANALYSIS FREQUENCY	TYPE OF ACTIVITY ANALYSIS	LOWER LIMIT OF DETECTION[a] (LLD) (μCi/ml)
A. Batch Waste Release Tanks	Prior to Each Batch	Prior to Each Batch	Principal Gamma Emitters[e]	$5x10^{-7}$
			I-131	$1x10^{-6}$
	Prior to Each Batch	M Composite[b]	Gross Alpha	$1x10^{-7}$
			H-3	$1x10^{-5}$
	Prior to Each Batch	Q Composite[b]	Fe-55	$1x10^{-6}$
			Sr-89, Sr-90	$5x10^{-8}$
	Prior to One Batch/M	M	Dissolved & Entrained Gases[f] (Gamma Emitters)	$1x10^{-5}$
B. Plant Continuous Releases	M[c] (Grab Sample)	M[c]	I-131	$1x10^{-6}$
			Principle Gamma Emitters[e]	$5x10^{-7}$
			Dissolved and Entrained Gases[f] (Gamma Emitters)	$1x10^{-5}$
			H-3	$1x10^{-5}$
			Gross Alpha	$1x10^{-7}$
	Q[c] (Grab Sample)	Q[c]	Sr-89, Sr-90	$5x10^{-8}$
			Fe-55	$1x10^{-6}$

TABLE 12-3-2 (Continued)

RADIOACTIVE LIQUID WASTE SAMPLING AND ANALYSIS PROGRAM

TABLE NOTATION

a. The LLD is defined in Notation A of Table 12.5-3.

b. A composite sample is one in which the quantity of liquid samples is proportional to the quantity of liquid waste discharged and in which the method of sampling employed results in a specimen which is representative of the liquids released.

c. If the alarm setpoint of the service water effluent monitor as determined in the ODCM is exceeded, the frequency of analysis shall be increased to daily until the condition no longer exists.

d. A batch release is the discharge of liquid wastes of a discrete volume. Prior to sampling for analyses, each batch shall be isolated then thoroughly mixed to assure representative sampling. A continuous release is the discharge of liquid wastes of a nondiscrete volume; e.g., from a volume or system that has an input flow during the release.

e. The principal gamma emitters for which the LLD specification applies exclusively are the following radionuclides: Mn-54, Fe-59, Co-60, Zn-65, Co-58, Mo-99, Cs-134, Cs-137, Ce-141, and Ce-144. Other peaks which are measurable and identifiable by gamma ray spectrometry together with the above nuclides, shall be also identified and reported when the actual analysis is performed on a sample. Nuclides which are below the LLD for the analyses shall not be reported as being present at the LLD level for that nuclide.

f. The dissolved and entrained gases (gamma emitters) for which the LLD specification applies exclusively are the following radionuclides: Kr-87, Kr-88, Xe-133, Xe-133m, Xe-135, and Xe-138. Other dissolved and entrained gases (gamma emitters) which are measurable and identifiable by gamma-ray spectrometry, together with the above nuclides, shall also be identified and reported when an actual analysis is performed on a sample. Nuclides which are below the LLD for the analyses shall not be reported as being present at the LLD level for that nuclide.

12.3 LIQUID EFFLUENTS

12.3.2 Dose

Operability Requirements

12.3.2.A The dose or dose commitment above background to a member of the public from radioactive materials in liquid effluents released to unrestricted areas (at or beyond the site boundary) from the site shall be limited to the following:

1. During any calendar quarter:
   (a) Less than or equal to 3 mrem to the whole body.
   (b) Less than or equal to 10 mrem to any organ.

Applicability: At all times

2. During any calendar year:
   (a) Less than or equal to 6 mrem to the whole body.
   (b) Less than or equal to 20 mrem to any organ.

Action:

1. With the calculated dose from the release of radioactive materials in liquid effluents exceeding any of the above limits, prepare and submit to the Commission within 30 days a Special Report which identifies the cause(s) for exceeding the limit(s) and defines the corrective actions taken and the proposed actions to be taken to ensure that future releases are in compliance with 12.3.2.A. This is in lieu of a Licensee Event Report.

2. With the calculated dose from the release of radioactive materials in liquid effluents exceeding the limits of Specification 12.3.2.A., prepare and submit a Special Report to the Commission within 30 days an limit the subsequent releases such that the dose or dose commitment to a member of the public from all uranium fuel cycle sources is limited to less than or equal to 25 mrem to the total body or any organ (except thyroid, which is limited to less than or equal to 75 mrem) over 12 consecutive months.

   This Special Report shall include an analysis which demonstrates that radiation exposures to all members of the public from all uranium fuel cycle sources (including all effluent pathways and direct radiation) are less than the 40 CFR Part 190 Standard. Otherwise obtain a variance from the Commission to permit releases which exceed the 40 CFR Part 190 Standard. The radiation exposure analysis contained in the Special Report shall use methods prescribed in the ODCM. This report is in lieu of a Licensee Event Report.

3. With the projected annual whole body or any internal organ dose computed at the nearest downstream community water system is equal to or exceeds 2 mrem from all radioactive materials released in liquid effluents from the Station, prepare and submit a Special Report within 30 days to the operator of the community water system. The report is prepared to assist the operator in meeting the requirements of 40 CFR 141: EPA Primary Drinking Water Standards. A copy of this report will be sent to the NRC. This is in lieu of a Licensee Event Report.

12.3 LIQUID EFFLUENTS

12.3.2 Dose (Cont.)

Surveillance Requirements

12.3.2.B.1. The dose contributions from measured quantities of radioactive material shall be determined by calculation at least once per 31 days and a cumulative summation of these total body and organ doses shall be maintained for each calendar quarter.

12.3.2.B.2 Doses computed at the nearest community water system will consider only the drinking water pathway and shall be projected using the methods prescribed in the ODCM at least once per 92 days.

Bases

12.3.2.C This specification is provided to implement the requirements of Sections II.A, III.A and IV.A of Appendix I, 10 CFR Part 50. The Limiting Condition for Operation implements the guides set forth in Section II.A of Appendix I. The statements provide the required operating flexibility and at the same time implement the guides set forth in Section IV.A of Appendix I to assure that the releases of radioactive material in liquid effluents will be kept "as low as is reasonably achievable". The dose calculations in the ODCM implement the requirements in Section III.A of Appendix I that conformance with the guides of Appendix I be shown by calculational procedures based on models and data such that the actual exposure of an individual through appropriate pathways is unlikely to be substantially underestimated. The equations specified in the ODCM for calculating the doses due to the actual release rates of radioactive materials in liquid effluents will be consistent with the methodology provided in Regulatory Guide 1.109, "Calculation of Annual doses to Man from Routine Releases of Reactor Effluents for the Purpose of Evaluating Compliance with 10 CFR Part 50, Appendix I", Revision 1, October 1977 and Regulatory Guide 1.113, "Estimating Aquatic Dispersion of Effluents from Accidental and Routine Reactor Releases for the Purpose of Implementing Appendix I", April 1977. NUREG-0113 provides methods for dose calculations consistent with Reg Guide 1.109 and 1.113.

12.3 LIQUID EFFLUENTS

12.3.3 Liquid Radwaste Treatment System

Operability Requirements

12.3.3.A At all times during processing prior to discharge to the environs, process and control equipment provided to reduce the amount or concentration of radioactive materials shall be operated when the projected dose due to liquid effluent releases to unrestricted areas (see Appendix F, Figure F-1), when averaged over 31 days, exceeds 0.13 mrem to the total body or 0.42 mrem to any organ

Action:

1. If liquid waste has to be or is being discharged without treatment as required above, prepare and submit to the Commission within 30 days, a report which includes the following information:

   a. Identification of the defective equipment.
   b. Cause of the defective equipment.
   c. Action(s) taken to restore the equipment to an operating status.
   d. Length of time the above requirements were not satisfied.
   e. Volume and curie content of the waste discharged which was not processed by the inoperable equipment but which required processing.
   f. Action(s) taken to prevent a recurrence of equipment failures.

2. In the event a limited and/or associated action requirements identified in Sections 12.3.3.A cannot be satisfied because of circumstances in excess of those addressed in this Section, no changes are required in the operational condition of the plant, and this does not prevent the plant from entry into an operational mode.

Surveillance Requirements

12.3.3.B Doses due to liquid releases to unrestricted areas (at or beyond the site boundary) shall be projected at least once per 31 days in accordance with ODCM.

Bases

12.3.3.C The operability of the liquid radwaste treatment system ensures that this system will be available for use whenever liquid effluents require treatment prior to release to the environment. The requirement that the appropriate portions of this system be used when specified provides assurance that the releases of radioactive materials in liquid effluents will be kept "as low as is reasonably achievable". This specification implements the requirements of 10 CFR Part 50.36a, General Design Criterion 60 of Appendix A to 10 CFR Part 50 and design objective Section 11.D of Appendix I to 10 CFR Part 50.

12.4 GASEOUS EFFLUENTS

12.4.1 Dose Rate

Operability Requirements

12.4.1.A The dose rate in unrestricted areas (at or beyond the site boundary, see Quad Cities Station ODCM Annex, Appendix F, Figure F-1) due to radioactive materials released in gaseous effluents from the site shall be limited to the following:

1. For Noble Gases:

   (a) Less than 500 mrem/year to the whole body.
   (b) Less than 3000 mrem/year to the skin.

2. For iodine-131, for iodine 133, and for all radionuclides in particulate form with half-lives greater than 8 days less than 1500 mrem/year.

Action:

If the dose rates exceed the above limits, without delay decrease the release rates to bring the dose rates within the limits, and to provide prompt notification to the Commission (12.6)

Surveillance Requirements

12.4.1.B The dose rates due to radioactive materials released in gaseous effluents from the site shall be determined to be within the prescribed limits by obtaining representative samples in accordance with the sampling and analysis program specified in Table 12.4-1. The dose rates are calculated using methods prescribed in the Offsite Dose Calculation Manual (ODCM).

Bases

12.4.1.C This specification is provided to ensure that the dose at the unrestricted area boundary from gaseous effluents from the units on the site will be within the annual dose limits of 10CFR20. These limits provide reasonable assurance that radioactive material discharged in gaseous effluents will not result in the exposure of an individual in an unrestricted area to annual average concentrations exceeding the limits specified in Appendix B, Table 2 of 10CFR20. The specified release rate limits restrict, at all times, the corresponding gamma and beta dose rates above background to an individual at or beyond the unrestricted area boundary to less than or equal to a dose rate of 500 mrem/year to the total body or to not less than or equal to a dose rate of 3000 mrem/year to the skin. These release rate limits also restrict, at all times, the corresponding thyroid dose rate above background via the inhalation pathway to not less than or equal to a dose rate of 1500 mrem/year. For purposes of calculating doses resulting from airborne releases the main chimney is considered to be an elevated release point, and the reactor vent stack is considered to be a mixed mode release point.

TABLE 12.4-1

RADIOACTIVE GASEOUS WASTE SAMPLING AND ANALYSIS PROGRAM

GASEOUS RELEASE TYPE	SAMPLING FREQUENCY	MINIMUM ANALYSIS FREQUENCY	TYPE OF ACTIVITY ANALYSIS	LOWER LIMIT OF DETECTION[a] (LLD) (μCi/ml)
A. Main Chimney Reactor Bldg. Vent Stack	M Grab Sample	M[b]	Principal Gamma Emitters[e]	$1x10^{-4}$
		M	Tritium	$1x10^{-6}$
B. All Release Types as Listed in A Above	Continuous (d)	W[c] Charcoal Sample	I-131	$1x10^{-12}$
			I-133	$1x10^{-10}$
	Continuous (d)	W[c] Particulate Sample	Principal Gamma Emitters[e] (I-131, others)	$1x10^{-11}$
	Continuous (d)	Q Composite Particulate Sample	SR-89	$1x10^{-11}$
			SR-90	$1x10^{-11}$
	Continuous (d)	M Composite Particulate Sample	Gross Alpha	$1x10^{-11}$
C. Main Chimney	Continuous (d)	Noble Gas Monitor	Noble Gases	$1x10^{-6}$
D. Reactor Bldg. Vent Stack	Continuous (d)	Noble Gas Monitor	Noble Gases	$1x10^{-4}$

TABLE 12.4-1 (Continued)

RADIOACTIVE GASEOUS WASTE SAMPLING AND ANALYSIS PROGRAM

TABLE NOTATION

a. The lower limit of detection (LLD) is defined in Notation A of Table 12.5-3.

b. Sampling and analyses shall also be performed following shutdown, startup, or a thermal power change exceeding 20 percent of rated thermal power in 1 hour unless (1) analysis shows that the DOSE EQUIVALENT I-131 concentration in the primary coolant has not increased more than a factor of 5, and (2) the noble gas activity monitor shows that effluent activity has not increased by more than a factor of 3.

c. Samples shall be changed at least once per 7 days and the analyses completed within 48 hours after removal from the sampler. Sampling shall also be performed within 24 hours following each shutdown, startup, or thermal power level change exceeding 20% of rated thermal power in one hour. This requirement does not apply if (1) analysis shows that the DOSE EQUIVALENT I-131 concentration in the primary coolant has not increased more than a factor of 5, and (2) the noble gas activity monitor shows that effluent activity has not increased by more than a factor of 3. When samples collected for 24 hours are analyzed, the corresponding LLD's may be increased by a factor of 10.

d. The ratio of sample flow rate to the sampled stream flow rate shall be known.

e. The principal gamma emitters for which the LLD specification applies exclusively are the following radionuclides: Kr-87, Kr-88, Xe-133, Xe-133m, Xe-135, and Xe-138 for gaseous emissions, and Mn-54, Fe-59, Co-60, Zn-65, Co-58, Mo-99, Cs-134, Cs-137, Ce-141, and Ce-144 for particulate emissions. Other peaks which are measurable and identifiable by gamma ray spectrometry, together with the above nuclides, shall be also identified and reported when an actual analysis is performed on a sample. Nuclides which are below the LLD for the analyses shall not be reported as being present at the LLD level for that nuclide.

12.4 GASEOUS EFFLUENTS

12.4.2 Dose - Noble Gases

Operability Requirements

12.4.2.A The air dose in unrestricted areas (at or beyond the site boundary) due to Noble Gases released in gaseous effluents from the unit shall be limited to the following:

1. For gamma radiation:
   (a) Less than or equal to 5 mrad during any calendar quarter.
   (b) Less than or equal to 10 mrad during any calendar year.

2. For Beta radiation:
   (a) Less than or equal to 10 mrad during any calendar quarter.
   (b) Less than or equal to 20 mrad during any calendar year.

Action:

1. With the calculated air dose from radioactive noble gases in gaseous effluents exceeding any of the above limits, prepare and submit to the Commission within 30 days, a Special Report which identifies the cause(s) for exceeding the limit(s) and defines the corrective actions to be taken to ensure that future releases are in compliance with 12.4.2.A. This is in lieu of a Licensee Event Report.

2. With the calculated air dose from radioactive noble gases in gaseous effluents exceeding the limits of Specification 12.4.2.A, prepare and submit a Special Report to the Commission within 30 days and limit the subsequent releases such that the doses or dose commitment to a member of the public from all uranium fuel cycle sources is limited to less than or equal to 25 mrem to the total body or any organ (except thyroid, which is limited to less than or equal to 75 mrem) over 12 consecutive months. This Special Report shall include an analysis which demonstrates that radiation exposure to all members of the public from all uranium fuel cycle sources (including all effluent pathways and direct radiation) are less than the 40 CFR Part 190 Standard. Otherwise, obtain a variance from the Commission to permit releases which exceed the 40 CFR Part 190 Standard. The radiation exposure analysis contained in the Special Report shall use the methods prescribed in the ODCM. This report is in lieu of a Licensee Event Report.

Surveillance Requirements

12.4.2.B The air dose due to releases of radioactive noble gases in gaseous effluents shall be determined to be within the prescribed limits by obtaining representative samples in accordance with the sampling and analysis program specified in sections A and B of Table 12.4-1. The allocation of effluents between units having shared effluent control systems and the air doses are determined using methods prescribed in the ODCM at least once every 31 days.

12.4 GASEOUS EFFLUENTS

12.4.2 Dose - Noble Gases (Cont.)

Bases

12.4.2.C This specification is provided to implement the requirements of Sections II.B, III.A and IV.A of Appendix I, 10 CFR Part 50. The Limiting Condition for Operation implements the guides set forth in Section II.B of Appendix I. The statements provide the required operating flexibility and at the same time implement the guides set forth in Section IV.A of Appendix I to assure that the releases of radioactive material in gaseous effluents will be kept "as low as is reasonably achievable." The Surveillance Requirements implement the requirements in Section III.A of Appendix I that conformance with the guides of Appendix I is to be shown by calculational procedures based on models and data such that the actual exposure of an individual through the appropriate pathways is unlikely to be substantially underestimated. The dose calculations established in the ODCM for calculating the doses due to the actual release rates of radioactive noble gases in gaseous effluents will be consistent with the methodology provided in Regulatory Guide 1.109, "Calculation of Annual Doses to Man from Routine Releases of Reactor Effluents for the Purpose of Evaluating Compliance with 10 CFR Part 50, Appendix I," Revision 1, October 1977 and Regulatory Guide 1.111, "Methods for Estimating Atmospheric Transport and Dispersion of Gaseous Effluents in Routine Releases from Light-Water Cooled Reactors", Revision 1, July 1977. The ODCM equations provide for determining the air doses at the unrestricted boundary based upon the historical average atmospheric conditions. NUREG-0133 provides methods for dose calculations consistent with Regulatory Guides 1.109 and 1.111.

12.4 GASEOUS EFFLUENTS

12.4.3 Dose - Radioiodine - 131 and 133, Tritium and Radionuclides in Particulate Form

Operability Requirements

12.4.3.A The dose to a member of the public in unrestricted areas (at or beyond the site boundary) from iodine-131, iodine-133, tritium, and all radionuclides in particulate form with half-lives greater than 8 days in gaseous effluents released from the unit shall be limited to the following:

1. Less than or equal to 7.5 mrem to any organ during any calendar quarter.

2. Less than or equal to 15 mrem to any organ during any calendar year.

Applicability: At all times

Action:

1. With the calculated dose from the release of iodine-131, iodine-133, tritium, and all radionuclides in particulate form with half-lives greater than 8 days in gaseous effluents exceeding any of the above limits, prepare and submit to the Commission within 30 days, a Special Report which identifies the cause(s) for exceeding the limit and defines the corrective actions taken and the proposed actions to be taken to ensure that future releases are in compliance with 12.4.3.A This is in lieu of a Licensee Event Report.

2. With the calculated dose from the release of iodine-131, iodine-133, tritium, and all radionuclides in particulate form with half-lives greater than 8 days in gaseous effluents exceeding the limits of Section 12.4.3.A, prepare and submit a Special Report to the Commission within 30 days and limit subsequent releases such that the dose or dose commitment to a member of the public from all uranium fuel cycle sources is limited to less than or equal to 25 mrem to the total body or organ (except the thyroid, which is limited to less than or equal to 75 mrem) over 12 consecutive months. This Special Report shall include an analysis which demonstrates that radiation exposures to all members of the public from all uranium fuel cycle sources (including all effluent pathways and direct radiation) are less than the 40 CFR Part 190 Standard. Otherwise, obtain a variance from the Commission to permit releases which exceed the 40 CFR Part 190 Standard. The radiation exposure analysis contained in the Special Report shall use the methods prescribed in the ODCM. This report is in lieu of a Licensee Event Report.

12.4 GASEOUS EFFLUENTS

12.4.3 Dose - Radioiodine - 131 and 133, Tritium and Radionuclides in Particulate Form (Cont.)

Surveillance Requirements

12.4.3.B.1 The dose to a member of the public due to releases of iodine-131, iodine-133, tritium, and all radionuclides in particulate form with half-lives greater than 8 days shall be determined to be within the prescribed limits by obtaining representative samples in accordance with the sampling and analysis program specified in Table 12.4-1.

12.4.3.B.2 For radionuclides not determined in each batch or weekly composite, the dose contribution to the current calendar quarter cumulative summation may be estimated by assuming an average monthly concentration based on the previous monthly or quarterly composite analyses. However, for reporting purposes, the calculated dose contributions shall be based on the actual composite analyses when possible. The allocation of effluents between units having shared effluent control systems and the doses are determined using the methods prescribed in the ODCM at least once every 31 days.

Bases

12.4.3.C This specification is provided to implement the requirements of Sections II.C, III.A and IV.A of Appendix I, 10 CFR Part 50. The Limiting Conditions for Operation are the guides set forth in Section II.C of Appendix I. The statements provide the required operating flexibility and at the same time implement the guides set forth in Section Iv.A of Appendix I to assure that the releases of radioactive materials in gaseous effluents will be kept "as low as is reasonable achievable." The ODCM calculational methods specified in the surveillance requirements implements the requirements in Section III.A of Appendix I that conformance with the guides of Appendix I be shown by calculational procedures based on models and data such that the actual exposure of an individual through appropriate pathways is unlikely to be substantially underestimated. The ODCM calculational methods approved by NRC for calculating the doses due to the actual release rates of the subject materials are required to be consistent with the methodology provided in Regulatory Guide 1.109, "Calculation of Annual Doses to Man from Routine Releases of Reactor Effluents for the Purpose of Evaluating Compliance with 10 CFR Part 50, Appendix I", Revision 1, October 1977 and Regulatory Guide 1.111, "Methods for Estimating Atmospheric Transport and Dispersion of Gaseous effluents in Routine Releases from Light-Water-Cooled Reactors," Revision 1, July 1977. These equations also provide for determining the actual doses based upon the historical average atmospheric conditions.

The release rate specifications for radioiodine, radioactive material in particulate form and radionuclides other than noble gases are dependent on the existing radionuclide pathways to man, in the unrestricted area. The pathways which were examined in the development of these specifications were: 1) individual inhalation of airborne radionuclides, 2) deposition of radionuclides onto green leafy vegetation with subsequent consumption by man and 3) deposition onto grassy areas where milk animals graze with consumption of the milk by man.

12.4 GASEOUS EFFLUENTS

12.4.4 Off-Gas System

Operability Requirements

12.4.4.A At all times during processing for discharge to the environs, process and control equipment provided to reduce the amount or concentration of radioactive materials shall be operated.

Applicability and Action:
The above specification shall not apply for the Off-Gas Charcoal Adsorber Beds below 30 percent of rated thermal power.

1. The release rate of the sum of the activities from the noble gases measured at the main condenser air ejector shall be limited to less than or equal to 100 microcuries/sec per MWt (after 30 minutes decay) at all times. With the release rate of the sum of the activities from noble gases at the main condenser air ejector exceeding 100 microcuries/sec per MWt (after 30 minutes decay), restore, the release rate to within its limits within 72 hours, or be in at least STARTUP with the main steam isolation valves closed within the next 8 hours.

2. With all charcoal beds bypassed for more than 7 days in a calendar
quarter while operating above 30 percent of rated thermal power, prepare and submit to the Commission within 30 days a special report which includes the following information:

   a. Identification of the defective equipment.
   b. Cause of the defective equipment.
   c. Action(s) taken to restore the equipment to an operating status.
   d. Length of time the above requirements were not satisfied.
   e. Volume and curie content of the waste discharged which was not processed by the inoperable equipment but which required processing.
   f. Action(s) taken to prevent a recurrence of equipment failures.

3. In the event a limit and/or associated action requirement identified in Section 12.4.4.A cannot be satisfied because of circumstances in excess of those addressed in this Section, no changes are required in the operational condition of the plant, and this does not prevent the plant from entry into an operational mode.

Surveillance Requirements

12.4.4.B.1 Doses due to treated gases released to unrestricted areas at or beyond the site boundary shall be projected at least once per 31 days in accordance with the ODCM.

12.4 GASEOUS EFFLUENTS

12.4.4 Off-Gas System (Continued)

12.4.4.B.2 The radioactivity rate of noble gases at (near) the outlet of the main condenser air ejector shall be continuously monitored in accordance with Specification 12.2.2.A. The release rate of the sum of the activities from noble gases from the main condenser air ejector shall be determined to be within the limits of Specification 12.4.4.A at the following frequencies by performing an isotope analysis of a representative sample of gases taken at the recombiner outlet, or at the air ejector outlet if the recombiner is bypassed.

a. At least once per 31 days.

b. Within 4 hours following an increase, as indicated by the main condenser air ejector noble gas activity monitor, of greater than 50%, after factoring out increases due to changes in thermal power level and off-gas flow, in the nominal steady-state fission gas release from the primary coolant.

Bases

12.4.4.C The requirement that the appropriate portions of these systems be used, when specified, provides reasonable assurance that the releases of radioactive materials in gaseous effluents will be kept "as low as is reasonable achievable". This specification implements the requirements of 10 CFR 50.36a, General Design Criterion 60 of Appendix A to 10CFR50, and the design objectives given in Section 11.0 of Appendix I to 10CFR50. The specified limits governing the use of appropriate portions of the systems were specified as a suitable fraction of the dose design objectives set forth in Sections 11.3 and 11.0 of Appendix I, 10CFR50, for gaseous effluents.

12.4 GASEOUS EFFLUENTS

12.4.5 Total Dose

Operability Requirements

12.4.5.A The annual (calendar year) dose or dose commitment to any MEMBER OF THE PUBLIC due to releases of radioactivity and to radiation from uranium fuel cycle sources shall be limited to less than or equal to 25 mrems to the whole body or any organ, except the thyroid, which shall be limited to less than or equal to 75 mrems.

Applicability: At all times.

Action:

1. With the calculated doses from the release of radioactive materials in liquid or gaseous effluents exceeding twice the limits of Sections 12.3.2, 12.4.2, or 12.4.3, calculations should be made including direct radiation contributions from the units and from outside storage tanks to determine whether the above limits of Section 12.4.5.A have been exceeded. If such is the case, prepare and submit to the Commission within 30 days, pursuant to Technical Specification 6.9.2, a Special Report that defines the corrective action to be taken to reduce subsequent releases to prevent recurrence of exceeding the above limits and includes the schedule for achieving conformance with the above limits. This Special Report, as defined in 10 CFR 20.2203, shall include an analysis that estimates the radiation exposure (dose) to a MEMBER OF THE PUBLIC from uranium fuel cycle sources, including all effluent pathways and direct radiation, for the calendar year that includes the release(s) covered by this report. It shall also describe levels of radiation and concentration of radioactive material involved, and the cause of the exposure levels or concentrations. If the estimated dose(s) exceeds the above limits, and if the release condition resulting in violation of 40 CFR Part 190 has not already been corrected, the Special Report shall include a request for a variance in accordance with the provisions of 40 CFR Part 190. Submittal of the report is considered a timely request, and a variance is granted until staff action on the request is complete.

Surveillance Requirements

12.4.5.1.A Cumulative dose contributions from liquid and gaseous effluents shall be determined in accordance with Sections 12.3.2, 12.4.2, and 12.4.3, and in accordance with the methodology and parameters in the ODCM.

12.4.5.2.B Cumulative dose contributions from direct radiation from the units and from radwaste storage tanks shall be determined in accordance with the methodology and parameters in the ODCM. This requirement is applicable only under conditions set forth in ACTION 1 of Section 12.4.5.A.

12.4 GASEOUS EFFLUENTS

12.4.5 Total Dose (Cont.)

Bases

12.4.5.C This section is provided to meet the dose limitations of 40 CFR Part 190 that have been incorporated into 10 CFR Part 20 by 46 FR 18525. The section requires the preparation and submittal of a Special Report whenever the calculated doses due to releases of radioactivity and to radiation from uranium fuel cycle sources exceed 25 mrems to the whole body or any organ, except the thyroid, which shall be limited to less than or equal to 75 mrems. For sites containing up to four reactors, it is highly unlikely that the resultant dose to a MEMBER OF THE PUBLIC will exceed the dose limits of 40 CFR Part 190 if the individual reactors remain within twice the dose design objectives of Appendix I, and if direct radiation doses from the reactor units and outside storage tanks are kept small. The Special Report will describe a course of action that should result in the limitation of the annual dose to a MEMBER OF THE PUBLIC to within the 40 CFR Part 190 limits. For the purposes of the Special Report, it may be assumed that the dose commitment to the MEMBER OF THE PUBLIC from other uranium fuel cycle sources is negligible, with the exception that dose contributions from other nuclear fuel cycle facilities at the same site or within a radius of 8 km must be considered. If the dose to any MEMBER OF THE PUBLIC is estimated to exceed the requirements of 40 CFR Part 190, the Special Report with a request for a variance (provided the release conditions resulting in violation of 40 CFR Part 190 have not already been corrected), in accordance with the provisions of 40 CFR 190.11 and 10 CFR 20.2203, is considered to be a timely request and fulfills the requirements of 40 CFR Part 190 until NRC staff action is completed. The variance only relates to the limits of 40 CFR Part 190, and does not apply in any way to the other requirements for dose limitation of 10 CFR Part 20, as addressed in Sections 12.3.1 and 12.4.1. An individual is not considered a MEMBER OF THE PUBLIC during any period in which he/she is engaged in carrying out any operation that is part of the nuclear fuel cycle.

12.4 GASEOUS EFFLUENTS

12.4.6 Dose Limits for Members of the Public

Operability Requirements

12.4.6.A The licensee shall conduct operations such that the TEDE to individual MEMBERS OF THE PUBLIC does not exceed 100 mrem in a year. In addition, the dose in any unrestricted area from external sources does not exceed 2 mrem in any one hour. The Effluents Program shall implement monitoring, sampling, and analysis of radioactive liquid and gaseous effluents in accordance with 10CFR20.1302 and with the methodology and parameters in the ODCM.

Applicability: At all times.

Action:

1. If the calculated dose from the release or exposure of radiation meets or exceeds the 100 mrem/year limit for the MEMBER OF THE PUBLIC, prepare and submit a report to the Commission in accordance with 10CFR20.2203.

2. If the dose in any unrestricted area from external sources of radiation meets or exceeds the 2 mrem in any one hour limit for the MEMBER OF THE PUBLIC, prepare and submit a report to the Commission in accordance with 10CFR20.2203.

Surveillance Requirements

12.4.6.B Calculate the TEDE to individual MEMBERS OF THE PUBLIC annually to determine compliance with the 100 mrem/year limit in accordance with the ODCM. In addition, evaluate and/or determine if direct radiation exposures exceed 2 mrem in any hour in unrestricted areas.

Bases

12.4.6.C This section applies to direct exposure of radioactive materials as well as radioactive materials released in gaseous and liquid effluents. 10CFR20.1301 sets forth the 100 mrem/year dose limit to members of the public; 2 mrem in any one hour limit in the unrestricted area; and reiterates that the licensee is also required to meet the 40CFR190 standards. 10CFR20.1302 provides options to determine compliance to 10CFR20.1301. Compliance to the above operability requirement is based on 10CFR20, 40CFR190 and Quad Cities Station Technical Specifications.

12.5 RADIOLOGICAL ENVIRONMENTAL MONITORING PROGRAM

12.5.1 Monitoring Program

Operability Requirements

12.5.1.A The environmental monitoring program given in Table 12.5-1 shall be conducted as specified below.

Applicability: At all times

Action:

1. With the radiological environmental monitoring program not being conducted as specified in Table 12.5-1, prepare and submit to the Commission, in the Annual Radiological Operating Report, a description of the reasons for not conducting the program as required and the plans for preventing a recurrence.

   Deviations are permitted from the required sampling schedule if specimens are unobtainable due to hazardous conditions, seasonal unavailability, malfunction of sampling equipment, if a person/business who participates in the program goes out of business or can no longer provide sample, or contractor omission which is corrected as soon as discovered. If the equipment malfunctions, corrective actions shall be completed as soon as practical. If a person/business supplying samples goes out of business, a replacement supplier shall be found as soon as possible. All deviations from the sampling schedule willl be described in the Annual Radiological Environmental Operating Report.

2. With the level of radioactivity in an environmental sampling medium at one or more of the locations specified in the ODCM exceeding the limits of Table 12.5-2 when averaged over any calendar quarter, prepare and submit to the Commission within 30 days, a Special Report that identifies the cause(s) for exceeding the limit(s) and defines the corrective actions to be taken to reduce radioactive effluents so that the potential annual dose* to a MEMBER OF THE PUBLIC is less than calendar year limits of Section 12.3.2, 12.4.2, or 12.4.3. When more than one of the radionuclides in Table 12.5.2 are detected in the sampling medium, this report shall be submitted if:

$$\frac{\text{concentration (1)}}{\text{reporting level (1)}} + \frac{\text{concentration (2)}}{\text{reporting level (2)}} + \ldots \geq 1.0$$

   When radionuclides other than those in Table 12.5-2 are detected and are the result of plant effluents, this report shall be submitted if the potential dose* to a MEMBER OF THE PUBLIC from all radionuclides is equal to or greater than the calendar year limits of Section 12.3.2, 12.4.2, or 12.4.3. This report is not required if the measured level of radioactivity was not the result of plant effluents; however, in such an event the condition shall be reported and described in the Annual Radiological Environmental Operating Report.

*The methodology and parameters used to estimate the potential annual dose to a MEMBER OF THE PUBLIC shall be indicated in this report.

12.5. RADIOLOGICAL ENVIRONMENTAL MONITORING PROGRAM (Continued)

If the sample type or sampling location(s) as required by Table 12.5-1 become(s) permanently unavailable, identify suitable alternative sampling media for the pathway of interest and/or specific locations for obtaining replacement samples and add them to the radiological environmental monitoring program as soon as practicable. The specified locations from which samples were unavailable may then be deleted from the monitoring program.

Prepare and submit controlled version of the ODCM within 180 days including a revised figure(s) and table reflecting the new location(s) with supporting information identifying the cause of the unavailability of samples and justifying the selection of new location(s) for obtaining samples.

Surveillance Requirements

12.5.1.B The radiological environmental monitoring program samples shall be collected pursuant to Table 12.5-1 from the specific locations given in the table and figure(s) in the ODCM, and shall be analyzed pursuant to the requirements of Table 12.5-1 and the detection capabilities required by Table 12.5-3.

Bases

12.5.1.C The Radiological Environmental Monitoring Program required by this section provides representative measurements of radiation and of radioactive materials in those exposure pathways and for those radionuclides that lead to the highest potential radiation exposures of MEMBERS OF THE PUBLIC resulting from the station operation. This monitoring program implements Section IV.B.2 of Appendix I to 10 CFR Part 50 and thereby supplements the radiological effluent monitoring program by verifying that the measurable concentrations of radioactive materials and levels of radiation are not higher than expected on the basis of the effluent measurements and the modeling of the environmennal exposure pathways. Guidance for this monitoring program is provided by the Radiological Assessment Branch Technical Position on Environmental Monitoring. The initially specified monitoring program will be effective for at least the first 3 years of commercial operation. Following this period, program changes may be initiated based o on operational experience.

The required detection capabilities for environmental sample analyses are tabulated in terms of the lower limits of detection (LLDs). The LLDs required by Table 12.5-3 are considered optimum for routine environmental measurements in industrial laboratories. It should be recognized that the LLD is defined as a before the fact limit representing the capability of a measurement system and not as an after the fact limit for a particular measurement.

Detailed discussion of the LLD, and other detection limits, can be found in HASL Procedures Manual, HASL-300 (revised annually), Currie, LA., "Limits for Qualitative Detection and Quantitative Determination - Application to Radiochemistry," Anal. Chem. 40, 586-93 (1968), and Hartwell, J.K., "Detection Limits for Radioanalytical Counting Techniques ," Atlantic Richfield Hanford Company Report ARH-SA-215 (June 1975).

12.5 RADIOLOGICAL ENVIRONMENTAL MONITORING PROGRAM (Continued)

Interpretations

12.5.1.D Table 12.5-1 requires "one sample of each community drinking water supply downstream of the plant within 10 kilometers." Drinking water supply is defined as water taken from rivers, lakes, or,reservoirs (not well water) which is used for drinking.

TABLE 12.5-1

RADIOLOGICAL ENVIRONMENTAL MONITORING PROGRAM

EXPOSURE PATHWAY AND/OR SAMPLE	NUMBER OF REPRESENTATIVE SAMPLES AND SAMPLE LOCATIONS[1]	SAMPLING AND COLLECTION FREQUENCY	TYPE AND FREQUENCY OF ANALYSIS
1. Airborne Radioiodine and Particulates	Samples from a total of eight locations: a. Indicator- Near Field Four samples from locations within 4.0 km (2.5mi) in different sectors. b. Indicator- Far Field Three additional locations within 4.0 to 10 km (2.5 to 6.2 mi.) in different sectors. c. Control One sample from a control location within 10 to 30 km (6.2 to 18.6 mi.).	Continuous particulate sampler operation with sample collection weekly, or more frequently if required due to dust loading, and radioiodine canister collection biweekly.	Radioiodine Canister: I-131 analysis biweekly on near field samples and control. [2] Particulate Sampler: Gross beta analysis following weekly filter change[3] and gamma isotopic analysis[4] quarterly on composite filters by location on near field samples and control.[2]

TABLE 12.5-1 (Continued)

RADIOLOGICAL ENVIRONMENTAL MONITORING PROGRAM

EXPOSURE PATHWAY AND/OR SAMPLE	NUMBER OF REPRESENTATIVE SAMPLES AND SAMPLE LOCATIONS[1]	SAMPLING AND COLLECTION FREQUENCY	TYPE AND FREQUENCY OF ANALYSIS
2. Direct Radiation[5]	Forty routine monitoring stations either with a thermoluminescent dosimeter (TLD) or with one instrument for measuring dose rate continuously, placed as follows: a. Indicator- Inner Ring (100 Series TLD) One in each meteorological sector, in the general area of the SITE BOUNDARY (0.1 to 3 miles); b. Indicator- Outer Ring (200 Series TLD) One in each meteorological sector, within 6.0 to 8.0 km (3.7 to 5.0 mi); and c. Other One at each Airborne location given in part 1.a. and 1.b. The balance of the TLDs to be placed at special interest locations beyond the Restricted Area where either a MEMBER OF THE PUBLIC or Commonwealth Edison employees have routine access. (300 Series TLD)	Quarterly	Gamma dose on each TLD quarterly.

TABLE 12.5-1 (Continued)
RADIOLOGICAL ENVIRONMENTAL MONITORING PROGRAM

EXPOSURE PATHWAY AND/OR SAMPLE	NUMBER OF REPRESENTATIVE SAMPLES AND SAMPLE LOCATIONS[1]	SAMPLING AND COLLECTION FREQUENCY	TYPE AND FREQUENCY OF ANALYSIS
2. Direct Radiation[5] (Cont'd)	d. Control One at each Airborne control location given in part 1.c	Quarterly	Gamma dose on each TLD quarterly.
3. Waterborne a. Ground/Well	a. Indicator Samples from two sources only if likely to be affected.[6]	Quarterly	Gamma isotopic[4] and tritium analysis quarterly.
b. Drinking[7]	a. Indicator One Sample from each community drinking water supply that could be affected by the station discharge within 10 km (6.2 mi) downstream of discharge.	Weekly grab samples.	Gross beta and gamma isotopic analyses[4] on monthly composite; tritium analysis on quarterly composite.
c. Surface Water[7]	If no community water supply (Drinking Water) exists within 10 km downstream of discharge then surface water sampling shall be performed. a. Indicator One sample downstream	Weekly grab samples.	Gross beta and gamma isotopic analyses[4] on monthly composite; tritium analysis on quarterly composite.
d. Control Sample	a. Control One surface sample upstream of discharge.	Weekly grab samples.	Gross beta and gamma isotopic analyses[4] on monthly composite; tritium analysis on quarterly composite.

TABLE 12.5-1 (Continued)

RADIOLOGICAL ENVIRONMENTAL MONITORING PROGRAM

EXPOSURE PATHWAY AND/OR SAMPLE	NUMBER OF REPRESENTATIVE SAMPLES AND SAMPLE LOCATIONS[1]	SAMPLING AND COLLECTION FREQUENCY	TYPE AND FREQUENCY OF ANALYSIS
e. Sediment	a. Indicator At least one sample from downstream[7] area within 10 km (6.2 mi).	Semiannually.	Gamma isotopic analysis [4] semiannually.
4. Ingestion a. Milk [8]	a. Indicator Samples from milking animals from a maximum of three locations within 10 km (6.2 mi) distance. b. Control One sample from milking animals at a control location within 15 to 30 km (9.3 to 18.6 mi).	Biweekly [9] when animals are on pasture (May through October), monthly at other times (November through April).	Gamma isotopic[4] and I-131[10] analysis on each sample.
b. Fish	a. Indicator Representative samples of commercially and recreationally important species in discharge area. b. Control Representative samples of commercially and recreationally important species in control locations upstream of discharge.	Two times annually.	Gamma isotopic analysis[4] on edible portions

TABLE 12.5-1 (Continued)
RADIOLOGICAL ENVIRONMENTAL MONITORING PROGRAM

EXPOSURE PATHWAY AND/OR SAMPLE	NUMBER OF REPRESENTATIVE SAMPLES AND SAMPLE LOCATIONS[1]	SAMPLING AND COLLECTION FREQUENCY	TYPE AND FREQUENCY OF ANALYSIS
c. Food Products	a. Indicator Two representative samples from the principal food pathways grown in each of four major quadrants within 10 km (6.2 mi): At least one root vegetable sample[11] At least one broad leaf vegetable (or vegetation)[11] b. Control Two representative samples similar to indicator samples grown within 15 to 30 km (9.3 to 18.6 mi).	Annually	Gamma isotopic[4] analysis on each sample.

TABLE 12.5-1 (Continued)
RADIOLOGICAL ENVIRONMENTAL MONITORING PROGRAM
TABLE NOTATIONS

(1) Specific parameters of distance and direction from the centerline of the midpoint of the two units and additional description where pertinent, shall be provided for each and every sample location in Table 1.1-1 of the ODCM Station Annexes. Refer to NUREG-0133, "Preparation of Radiological Effluent Technical Specifications for Nuclear Power Plants," October 1978, and to Radiological Assessment Branch Technical Position, Revision 1, November 1979.

(2) Far field samples are analyzed when the respective near field sample results are inconsistent with previous measurements and radioactivity is confirmed as having its origin in airborne effluents from the station, or at the discretion of the Radiation Protection Director.

(3) Airborne particulate sample filters shall be analyzed for gross beta radioactivity 24 hours or more after sampling to allow for radon and thoron daughter decay. If gross beta activity in air particulate samples is greater than 10 times the yearly mean of control samples, gamma isotopic analysis shall be performed on the individual samples.

(4) Gamma isotopic analysis means the identification and quantification of gamma emitting radionuclides that may be attributable to the effluents from the station.

(5) One or more instruments, such as a pressurized ion chamber, for measuring and recording dose rate continuously may be used in place of, or in addition to, integrating dosimeters. Film badges shall not be used as dosimeters for measuring direct radiation. The 40 locations is not an absolute number. The number of direct radiation monitoring stations may be reduced according to geographical limitations; e.g., If a station is adjacent to a lake, some sectors may be over water thereby reducing the number of dosimeters which could be placed at the indicated distances. The frequency of analysis or readout for TLD systems will depend upon the characteristics of the specific system used and should be selected to obtain optimum dose information with minimal fading.

(6) Groundwater samples shall be taken when this source is tapped for drinking or irrigation purposes in areas where the hydraulic gradient or recharge properties are suitable for contamination.

(7) The "downstream" sample shall be taken in an area beyond but near the mixing zone. The "upstream sample" shall be taken at a distance beyond significant influence of the discharge. Upstream samples in an estuary must be taken far enough upstream to be beyond the station influence.

(8) If milking animals are not found in the designated indicator locations, or if the owners decline to participate in the REMP, all milk sampling may be discontinued.

(9) Biweekly refers to every two weeks.

(10) I-131 analysis means the analytical separation and counting procedure are specific for this radionuclide.

(11) One sample shall consist of a volume/weight of sample large enough to fill contractor specified container.

QUAD CITIES
TABLE 12.5-2

REPORTING LEVELS FOR RADIOACTIVITY CONCENTRATIONS IN ENVIRONMENTAL SAMPLES
REPORTING LEVELS

ANALYSIS	WATER (pCi/l)	AIRBORNE PARTICULATE OR GASES (pCi/m^3)	FISH (pCi/kg, wet)	MILK (pCi/l)	FOOD PRODUCTS (pCi/kg, wet)
H-3	20,000(1)				
Mn-54	1,000		30,000		
Fe-59	400		10,000		
Co-58	1,000		30,000		
Co-60	300		10,000		
Zn-65	300		20,000		
Zr-Nb-95	400				
I-131	2(2)	0.9		3	100
Cs-134	30	10	1,000	60	1,000
Cs-137	50	20	2,000	70	2,000
Ba-La-140	200			300	

(1) For drinking water samples. This is 40 CFR Part 141 value. If no drinking water pathway exists, a value of 30,000 pCi/l may be used.
(2) If no drinking water pathway exists, a value of 20 pCi/l may be used.

TABLE 12.5-3

DETECTION CAPABILITIES FOR ENVIRONMENTAL SAMPLE ANALYSIS[1]

LOWER LIMIT OF DETECTION (LLD)[2][3]

ANALYSIS	WATER (pCi/l)	AIRBORNE PARTICULATE OR GASES (pCi/m^3)	FISH (pCi/kg, wet)	MILK (pCi/l)	FOOD PRODUCTS (pCi/kg, wet)	SEDIMENT (pCi/kg, dry)
Gross Beta	4	0.01	1000			
H-3	200					
Mn-54	15		130			
Fe-59	30		260			
Co-58,60	15		130			
Zn-65	30		260			
Zr-Nb-95	15					
I-131[6]	1/15[4]	0.07	100	0.5/5[5]	60	
Cs-134	15	0.01	100	15	60	150
Cs-137	18	0.01	100	18	80	180
Ba-La-140	15			15		

TABLE 12.5-3 (Continued)
DETECTION CAPABILITIES FOR ENVIRONMENTAL SAMPLE ANALYSIS
TABLE NOTATIONS

(1) The nuclides on this list are not the only nuclides intended to be considered. Other peaks that are identifiable, together with those of the above nuclides, shall also be analyzed and reported in the Annual Radiological Environmental Operating Report.

(2) Required detection capabilities for thermoluminescent dosimeters used for environmental measurements shall be in accordance with the recommendations of Regulatory Guide 4.13.

(3) The Lower Limit of Detection (LLD) is defined, for purposes of these specifications, as the smallest concentration of radioactive material in a sample that will yield a net count, above system background, that will be detected with 95% probability with only 5% probability of falsely concluding that a blank observation represents a "real" signal.

For a particular measurement system, which may include radiochemical separation, the LLD is defined as follows:

$$LLD = \frac{4.66\ S_b + 3/t_b}{(E)\ (V)\ (2.22)\ (Y)\ (\exp(-\lambda\Delta t))}$$

$$LLD \sim \frac{4.66\ S_b}{(E)\ (V)\ (2.22)\ (Y)\ (\exp(-\lambda\Delta t))}$$

Where: $4.66\ S_b >> 3/t_b$

LLD = the "a priori" Lower Limit of Detection (picoCuries per unit mass or volume),

s_b = the standard deviation of the background counting rate or of the counting rate of a blank sample, as appropriate (counts per minute),

$$= \sqrt{\frac{\text{Total Counts}}{t_b}}$$

E = the counting efficiency(counts per disintegration),

V = the sample size (units of mass or volume),

2.22 = the number of disintegrations per minute per picoCurie,

Y = the fractional radiochemical yield, when applicable,

λ = the radioactive decay constant for the particular radionuclide (sec^{-1}),

TABLE 12.5-3 (Continued)
DETECTION CAPABILITIES FOR ENVIRONMENTAL SAMPLE ANALYSIS
TABLE NOTATIONS

t_b = counting time of the background or blank (minutes), and

Δt = the elapsed time between sample collection, or end of the sample collection period, and the time of counting (sec).

Typical values of E, V,,Y, and Δt should be used in the calculation.

It should be recognized that the LLD is defined as a before the fact limit representing the capability of a measurement system and not as an after the fact limit for a particular measurement.

Analyses shall be performed in such a manner that the stated LLDs will be achieved under routine conditions. Occasionally, background fluctuations, unavoidable small sample sizes, the presence of interfering nuclides, or other uncontrollable circumstances may render these LLDs unachievable. In such cases, the contributing factors shall be identified and described in the Annual Radiological Environmental Operating Report.

(4) If no drinking water pathway exists, the value of 15 pCi/l may be used.

(5) A value of 0.5 pCi/l shall be used when the animals are on pasture (May through October) and a value of 5 pCi/l shall be used at all other times (November through April).

(6) This LLD applies only when the analytical separation and counting procedure are specific for this radionuclide.

12.5.2 Land Use Census

Operability Requirements

12.5.2.A. A Land Use Census shall be conducted and shall identify within a distance of 10 km (6.2 miles) the location in each of the 16 meteorological sectors* of the nearest milk animal, the nearest residence**, and an enumeration of livestock. For dose calculation, a garden will be assumed at the nearest residence.

Applicability: At all times.

Action:

1. With a Land Use Census identifying a location(s) that yields a calculated dose or dose commitment, via the same exposure pathway 20% greater than at a location from which samples are currently being obtained in accordance with Section 12.5.1, add the new location(s) within 30 days to the Radiological Environmental Monitoring Program given in Chapter 11. The sampling location(s), excluding the control location, having the lowest calculated dose or dose commitment(s), via the same exposure pathway, may be deleted from this monitoring program after October 31 of the year in which this Land Use Census was conducted. Submit in the next Annual Radiological Environmental Operating Report documentation for a change in the ODCM including a revised figure(s) and table(s) for the ODCM reflecting the new location(s) with information supporting the change in sampling locations.

*This requirement may be reduced according to geographical limitations; e.g. at a lake site where some sector's will be over water.

**The nearest industrial facility shall also be documented if closer than the nearest residence.

Surveillance Requirements

12.5.2.B The Land Use Census shall be conducted during the growing season, between June 1 and October 1, at least once per 12 months using that information that will provide the best results, such as by a door-to-door survey, aerial survey, or by consulting local agriculture authorities. The results of the Land Use Census shall be included in the Annual Radiological Environmental Operating Report.

Bases

12.5.2.C This specification is provided to ensure that changes in the use of areas at and beyond the SITE BOUNDARY are identified and that modifications to the Radiological Environmental Monitoring Program given in the ODCM are made if required by the results of this census.

This census satisfies the requirements of Section IV.B.3 of Appendix I to 10 CFR Part 50. An annual garden census will not be required since the licensee will assume that there is a garden at the nearest residence in each sector for dose calculations.

5.3 Interlaboratory Comparison Program

Operability Requirements

12.5.3.A Analyses shall be performed on radioactive materials supplied as part of an Interlaboratory Comparison Program that correspond to samples required by Table 12.5-1.

Applicability: At all times.

Action:

1. With analyses not being performed as required above, report the corrective actions taken to prevent a recurrence to the Commission in the Annual Radiological Environmental Operating Report.

Surveillance Requirements

12.5.3.B A summary of the results obtained as part of the above required Interlaboratory Comparison Program shall be included in the Annual Radiological Environmental Operating Report.

Bases

12.5.3.C The requirement for participation in an Interlaboratory Comparison Program is provided to ensure that independent checks on the precision and accuracy of the measurements of radioactive material in environmental samples matrices are performed as part of the quality assurance program for environmental monitoring in order to demonstrate that the results are valid for the purposes of Section IV.B.2 of Appendix I to 10 CFR Part 50.

12.6 REPORTING REQUIREMENTS

Records and/or logs relative to the following items shall be kept in a manner convenient for review and shall be retained for at least 5 years:

- Records and periodic checks, inspection and/or calibrations performed to verify that the surveillance requirements (see Section 6.4 of the Technical Specifications) are being met (all equipment failing to meet surveillance requirements and the corrective action taken shall be recorded);

-Records of radioactive shipments;

Records and/or logs relative to the following items shall be recorded in a manner convenient for review and shall be retained for the life of the plant:

-Records of offsite environmental monitoring surveys;

-Records of radioactivity in liquid and gaseous wastes released to the environment;

-Records of reviews performed for changes made to the Offsite Dose Calculation Manual.

12.6.1 Radioactive Effluent Release Report*

Routine Annual Radioactive Effluent Release Reports covering the operation of the unit during the previous calendar year of operation shall be submitted prior to April 1 of the following year.

The Annual Radioactive Effluent Release Reports shall include a summary of the quantities of radioactive liquid and gaseous effluents and solid waste released from the unit as outlined in Regulatory Guide 1.21, "Measuring Evaluating, and Reporting Radioactivity in Solid Wastes and Releases of Radioactive Materials in Liquid and Gaseous Effluents from Light-Water-Cooled Nuclear Power Plants," Revision 1, June 1974, with data summarized on a quarterly basis following the format of Appendix B thereof.

The Annual Radioactive Effluent Release Reports shall include a list and description of unplanned releases from the site to UNRESTRICTED AREAS of radioactive materials in gaseous and liquid effluents made during the reporting period.

The Annual Radioactive Effluent Release Reports shall include any changes made during the reporting period to the PCP as well as any major changes to Liquid, Gaseous or Solid Radwaste Treatment Systems, pursuant to Section 12.6.3.

The Annual Radioactive Effluent Release Reports shall also include the following: an explanation as to why the inoperability of liquid or gaseous effluent monitoring instrumentation was not corrected within the specified time and description of the events leading to liquid holdup tanks or gas storage tanks exceeding the limits of Technical Specifications.

*A single submittal may be made for a multiple unit station. The submittal should combine those sections that are common to all units at the station; however, for units with separate radwaste systems, the submittal shall specify the releases of radioactive material from each unit.

12.6.2 Annual Radiological Environmental Operating Report*

Routine Annual Radiological Environmental Operating Report covering the operation of the Unit(s) during the previous calendar year shall be submitted prior to May 1 of each year.

The Annual Radiological Environmental Operating Report shall include summaries, interpretations, and an analysis of trends of the results of the radiological environmental surveillance activities for the report period, including a comparison with preoperational studies, with operational controls as appropriate, and with previous environmental surveillance reports, and an assessment of the observed impacts of the plant operation on the environment.

The Annual Radiological Environmental Operating Report shall include the results of all radiological environmental samples and of all environmental radiation measurements taken during the period pursuant to the locations specified in the tables and figures in Chapter 11 of the ODCM, as well as summarized and tabulated results of these analyses and measurements in the format of the table in the Radiological Assessment Branch Technical Position, Revision 1, November 1979. In the event that some individual results are not available for inclusion with the report, the report shall be submitted noting and explaining the reasons for the missing results. The missing data shall be submitted as soon as possible in a supplementary report.

The reports shall also include the following: a summary description of the Radiological Environmental Monitoring Program; legible maps covering all sampling locations keyed to a table giving distances and directions from the midpoint between the two units; reasons for not conducting the Radiological Environmental Monitoring Program as required by Section 12.5.1, a Table of Missed Samples and a Table of Sample Anomalies for all deviations from the sampling schedule of Table 11.1-1; discussion of environmental sample measurements that exceed the reporting levels of Table 12.5-2 but are not the result of plant effluents, discussion of all analyses in which the LLD required by Table 12.5-3 was not achievable; result of the Land Use Census required by Section 12.5.2; and the results of the licensee participation in an Interlaboratory Comparison Program and the corrective actions being taken if the specified program is not being performed as required by Section 12.5.3.

The Annual Radiological Environmental Operating Report shall also include an annual summary of hourly meteorological data collected over the applicable year. This annual summary may be either in the form of an hour-by-hour listing on magnetic tape of wind speed, wind direction, atmospheric stability, and precipitation (if measured), or in the form of joint frequency distributions of wind speed, wind direction, and atmospheric stability. In lieu of submission with the Annual Radiological Environmental Operating Report, the licensee has the option of retaining this summary of required meteorological data on site in a file that shall be provided to the NRC upon request.

The Annual Radiological Environmental Operating Report shall also include an assessment of the radiation doses due to the radioactive liquid and gaseous effluents released from the Unit or Station during the previous calendar year. This report shall also include an assessment of the radiation doses to the most likely exposed MEMBER OF THE PUBLIC from reactor releases and other near-by uranium fuel cycle sources including doses from primary effluent pathways and direct radiation for the previous calendar year. The assessment of radiation doses shall be performed in accordance with the methodology and parameters in the ODCM, and in compliance with 10CFR20 and 40 CFR Part 190, "Environmental Radiation Protection Standards for Nuclear Power Operation."

*A single submittal may be made for a multiple unit station.

12.6.3 OFFSITE DOSE CALCULATION MANUAL (ODCM)

The OFFSITE DOSE CALCULATION MANUAL (ODCM) shall contain the methodology and parameters used in the calculation of offsite doses resulting from radioactive gaseous and liquid effluents, in the calculation of gaseous and liquid effluent monitoring Alarm/Trip Setpoints, and in the conduct of the Radiological Environmental Monitoring Program. The ODCM shall also contain (1) the Radioactive Effluent Controls and Radiological Environmental Monitoring Programs described in Sections 12.2-12.5 and (2) descriptions of the information that should be included in the Radioactive Effluent Release Reports and in the Annual Radiological Environmental Operating Reports required by sections 12.6.2.

The ODCM shall be subject to review and approval by the Commission prior to implementation.

Changes to the ODCM:

1. Shall be documented and records of reviews performed shall be retained as required by Specification 6.14.A. This documentation shall contain:

   a. Sufficient information to support the change together with the appropriate analyses or evaluations justifying the change(s) and

   b. A determination that the change will maintain the level of radioactive effluent control required by 10 CFR 20.1302, 40 CFR Part 190, 10 CFR 50.36a, and Appendix I to 10 CFR Part 50 and not adversely impact the accuracy or reliability of effluent, dose, or setpoint calculations.

2. Shall become effective after review and acceptance by the Onsite Review and Investigative Function and the approval of the Plant Manager on the date specified by the Onsite Review and Investigative Function.

3. Shall be submitted to the Commission in the form of a complete, legible copy of the entire ODCM as a part of or concurrent with the Radioactive Effluent Release Report for the period of the report in which any change to the ODCM was made effective. Each change shall be identified by markings in the margin of the affected pages, clearly indicating the area of the page that was changed, and shall indicate the date (e.g., month/year) the change was implemented.

12.6.4 MAJOR CHANGES TO RADIOACTIVE WASTE TREATMENT SYSTEMS (LIQUID AND GASEOUS)

A. Licensee initiated major changes to the radioactive waste systems may be made provided:

1. The change is reported in the Monthly Operating Report for the period in which the evaluation was reviewed by the onsite review function. The discussion of each change shall contain:

   a. A summary of the evaluation that led to the determination that the change could be made in accordance with 10CFR50.59;

   b. Sufficient detailed information to support the reason for the change;

   c. A detailed description of the equipment, components, and process involved and the interfaces with other plant systems;

   d. An evaluation of the change which shows the predicted releases of radioactive materials in liquid and gaseous effluents and (or quantity of solid waste that differ from those previously predicted in the license application and amendments);

   e. A comparison of the predicted releases of radioactive materials in liquid and gaseous effluents and in solid waste to the actual releases for the period in which the changes were made;

   f. An estimate of the exposure to plant operating personnel as a result of the change; and

   g. Documentation of the fact that the change was reviewed and found acceptable by the onsite review function.

2. The change shall become effective upon review and acceptance by onsite review function.

APPENDIX F

Quad Cities Annex Index

PAGE	REVISION
F-i	1.8
F-ii	1.8
F-iii	1.8
F-iv	1.8
F-1	1.8
F-2	1.8
F-3	1.8
F-4	1.8
F-5	1.8
F-6	1.8
F-7	1.8
F-8	1.8
F-9	1.8
F-10	1.8
F-11	1.8
F-12	1.8
F-13	1.8
F-14	1.8
F-15	1.8
F-16	1.8
F-17	1.8
F-18	1.8
F-19	1.8
F-20	1.8
F-21	1.8
F-22	1.8
F-23	1.8
F-24	1.8
F-25	1.8
F-26	1.8
F-27	1.8
F-28	1.8
F-29	1.8
F-30	1.8
F-31	1.8
F-32	1.8
F-33	1.8
F-34	1.8
F-35	1.8
F-36	1.8
F-37	1.8
F-38	1.8
F-39	1.8
F-40	1.8
F-41	1.8
F-42	1.8
F-43	1.8
F-44	1.8
F-45	1.8
F-46	1.8
F-47	1.8
F-48	1.8
F-49	1.8

APPENDIX F

STATION-SPECIFIC DATA FOR QUAD CITIES UNITS 1 and 2

TABLE OF CONTENTS

		PAGE
F.1	INTRODUCTION	F-1
F.2	REFERENCES	F-1

APPENDIX F

LIST OF TABLES

NUMBER	TITLE	PAGE
F-1	Aquatic Environment Dose Parameters	F-2
F-2	Station Characteristics	F-3
F-3	Critical Ranges	F-4
F-4	Average Wind Speeds	F-5
F-5	X/Q and D/Q Maxima at or Beyond the Unrestricted Area Boundary	F-6
F-5a	X/Q and D/Q Maxima At or Beyond the Restricted Area Boundary	F-7
F-6	D/Q at the Nearest Milk Cow and Meat Animal Locations Within 5 Miles	F-8
F-7	Maximum Offsite Finite Plume Gamma Dose Factors Based on 1 cm Depth at the Unrestricted Area Boundary for Selected Nuclides	F-9
F-7a	Maximum Offsite Finite Plume Gamma Dose Factors Based on 1 cm Depth at the Restricted Area Boundary for Selected Nuclides	F-24
F-8	Parameters for Calculation of N-16 Skyshine Radiation from Quad Cities	F-39
Supplemental Tables		
A	Elevated Level Joint Frequency Distribution Table Summary - 296 Foot Elevation Data -Summary Table of Percent by Direction and Class -Summary Table of Percent by Direction and Speed -Summary Table of Percent by Speed and Class	F-40
B	Mixed Mode Joint Frequency Distribution Table Summary - 196 Foot Elevation Data -Summary Table of Percent by Direction and Class -Summary Table of Percent by Direction and Speed -Summary Table of Percent by Speed and Class	F-43
C	Ground Level Joint Frequency Distribution Table Summary - 33 Foot Elevation Data -Summary Table of Percent by Direction and Class -Summary Table of Percent by Direction and Speed -Summary Table of Percent by Speed and Class	F-46

APPENDIX F

LIST of FIGURES

NUMBER	TITLE	PAGE
F-1	Unrestricted Area Boundary	F-48
F-2	Restricted Area Boundary	F-49

APPENDIX F

STATION-SPECIFIC DATA FOR QUAD CITIES UNITS 1 and 2

F.1 INTRODUCTION

This appendix contains data relevant to the Quad Cities site. Included are a diagram of the unrestricted area boundary and tables of values of parameters used in offsite dose assessment.

F.2 REFERENCES

1. Sargent & Lundy, Analysis and Technology Division, Quad Cities Calculation No. ATD-0148, Revision 0, 1 and 2.

2. Sargent & Lundy, "N-16 Skyshine Ground Level Dose from Quad Cities Turbine Systems and Piping," Revision 0.

3. "Quad Cities Public Water Supply" letter from B.S. Ferguson (NSEP) to G. Wassenhove U.S. Army Corps of Engineers, February 16, 1989.

4. "Verification of Environmental Parameters used for Commonwealth Edison Company's Offsite Dose Calculations", NUTECH Engineering Group, 1992.

5. "Verification of Environmental Parameters used for Commonwealth Edison Company's Offsite Dose Calculations", NUS Corporation, 1988.

Table F-1
Aquatic Environment Dose Parameters

General Information[a]

Existence of irrigation not mentioned in Quad Cities Final Safety Analysis Report (FSAR), UFSAR, or Plant Design Analysis.

Recreation includes one or more of the following: boating, water skiing, swimming and sport fishing.

The station liquid discharge flows into the Mississippi River. Mississippi River Lock and Dam Number 14 is located between the station discharge and the E. Moline intake (see Figure 12 of the Quad Cities Unit 1 Plant Design Analysis, Volume II, and Figure 2.4.1 of the Quad Cities Safety Analysis Report.)

Water and Fish Ingestion Parameters

Parameter[b]	Value
$1/M^w$, $1/M^f$	1.0
F^w, cfs	5.75E4
F^f, cfs	5.75E3
t^f, hr[c]	24.0
t^w, hr[d]	8.0

Limits on Radioactivity in Unprotected Outdoor Tanks

Not Applicable (See Section A.2.4 of Appendix A)

---

[a] Quad Cities Updated Final Safety Analysis Report (USFAR) updated through Amendment 5 (9-3-87) Section 1.5.2 and Quad Cities Plant Design Analysis, Section 4.4

[b] The parameters are defined in Section A.2.1 of Appendix A.

[c] t^f (hr) = 24 hr (all stations) for the fish ingestion pathway

[d] t^w (hr) = 8 hr (Distance to the nearest public potable water intake, E. Moline, is 16 miles; flow rate of 2 mph is assumed)

Table F-2
Station Characteristics

Station: Quad Cities Nuclear Power Station

Location: Cordova, Illinois

Characteristics of Elevated Release Point

1) Release Height = 94.49 m[a] 2) Diameter = 3.35 m

3) Exit Speed = 16.0 m s^{-1}[a] 4) Heat Content = 68 kCal s^{-1}[a]

Characteristics of Vent Stack Release Point

1) Release Height = 48.5 m[a] 2) Diameter = 2.74 m

3) Exit Speed = 14.8 m s^{-1}[a]

Characteristics of Ground Level Release

1) Release Height = 0 m

2) Building Factor (D) = 43.4 m[a]

Meterological Data

A 296 ft Tower is Located 1623 m SSE of Elevated Release Point

---

Tower Data Used in Calculations

Release Point	Wind Speed and Direction	Differential Temperature
Elevated	296 ft	296-33 ft
Vent	196 ft	196-33 ft
Ground	33 ft	196-33 ft

[a] Used in calculating the meteorological and dose factors in Tables F-5, F-6, and F7. See Sections B.3 through B.6 of Appendix B.

Table F-3

Critical Ranges

Direction	Unrestricted Area Boundary[a] (m)	Restricted Area Boundary[b] (m)	Nearest Resident[c] (m)	Nearest Dairy Farm within 5 Miles[d] (m)
N	864	219	800	None
NNE	1029	224	1200	None
NE	1212	265	2000	None
ENE	1367	393	2000	None
E	1170	867	3600	None
ESE	1170	924	4800	5600
SE	1189	1010	4000	None
SSE	1422	1059	1600	None
S	1198	762	1200	None
SSW	2140	335	4800	None
SW	1372	232	4800	None
WSW	823	189	3200	None
W	713	189	3600	None
WNW	713	183	3600	None
NW	823	210	3600	None
NNW	1481	224	2800	None

[a] Nearest land in unrestricted area. Used in calculating the meteorological dose factors in Tables F-6 and F-7. See Sections B.3 through B.6 of Appendix B.

[b] These values are to the edge of the Mississippi River, where applicable.

[c] The distances are rounded to the nearest conservative 100 meters.

[d] Used in calculating the D/Q values in Table F-6. The distances are rounded to the nearest conservative 100 meters. A default value of 8000 meters is used when there are no dairies within 5 miles.

Table F-4

Average Wind Speeds

Downwind Direction	Average Wind Speed (m/sec)[a] Elevated[b]	Mixed Mode	Ground Level[b]
N	6.9	5.0	2.6
NNE	6.2	4.6	2.8
NE	5.3	3.7	2.4
ENE	6.0	4.4	2.8
E	6.9	5.0	3.2
ESE	7.1	5.2	3.7
SE	6.5	4.9	3.6
SSE	5.7	4.5	3.5
S	5.6	4.4	3.4
SSW	5.6	4.4	3.3
SW	5.8	4.6	3.0
WSW	6.0	4.7	3.4
W	6.1	4.8	3.1
WNW	6.0	4.5	2.6
NW	5.9	4.4	2.4
NNW	6.5	4.7	2.5

[a] Based on Quad Cities site meteorological data, January 1978 through December 1987 data for ground level and mixed mode release analysis and 1982-1987 data for elevated releases. Calculated in Reference 1 of Section F.2 using formulas in Section B.1.3 of Appendix B.

Table F-5

X/Q and D/Q Maxima at or Beyond the Unrestricted Area Boundary

Downwind Direction	Elevated(Stack) Release Radius (meters)	X/Q (sec/m**3)	Radius (meters)	D/Q (1/m**2)	Mixed Mode(Vent) Release Radius (meters)	X/Q (sec/m**3)	D/Q (1/m**2)	Ground Level Release Radius (meters)	X/Q (sec/m**3)	D/Q (1/m**2)
N	4400.	1.344E-08	864.	9.643E-10	864.	3.427E-07	2.869E-09	864.	3.817E-06	1.105E-08
NNE	4023.	1.703E-08	1029.	1.407E-09	1029.	2.219E-07	3.049E-09	1029.	2.597E-06	1.052E-08
NE	4828.	1.287E-08	1212.	7.019E-10	1212.	1.321E-07	1.299E-09	1212.	2.249E-06	6.701E-09
ENE	4400.	1.091E-08	1367.	6.723E-10	1367.	1.213E-07	1.319E-09	1367.	1.446E-06	4.806E-09
E	3600.	1.513E-08	1170.	1.139E-09	1170.	2.215E-07	2.811E-09	1170.	2.212E-06	9.318E-09
ESE	3600.	2.126E-08	1170.	1.536E-09	1170.	2.332E-07	3.437E-09	1170.	2.094E-06	1.047E-08
SE	4023.	1.758E-08	1189.	1.082E-09	1189.	1.439E-07	2.384E-09	1189.	1.255E-06	6.450E-09
SSE	4023.	1.259E-08	1422.	6.915E-10	1422.	8.279E-08	1.167E-09	1422.	6.885E-07	3.222E-09
S	4400.	1.005E-08	1500.	4.437E-10	1198.	6.887E-08	9.516E-10	1198.	8.371E-07	3.350E-09
SSW	4400.	8.621E-09	2140.	3.110E-10	2140.	5.104E-08	4.693E-10	2140.	4.296E-07	1.380E-09
SW	4400.	1.102E-08	1500.	4.856E-10	1372.	1.006E-07	1.116E-09	1372.	1.224E-06	3.856E-09
WSW	4400.	1.123E-08	1500.	4.674E-10	823.	2.158E-07	2.298E-09	823.	2.968E-06	1.093E-08
W	4828.	1.139E-08	1500.	4.704E-10	713.	3.445E-07	2.737E-09	713.	5.271E-06	1.522E-08
WNW	4828.	9.486E-09	1500.	4.025E-10	713.	5.025E-07	2.816E-09	713.	7.554E-06	1.788E-08
NW	4828.	9.752E-09	823.	5.475E-10	823.	2.981E-07	2.009E-09	823.	4.739E-06	1.144E-08
NNW	4400.	1.045E-08	1481.	6.127E-10	1481.	1.712E-07	1.202E-09	1481.	1.928E-06	4.543E-09

QUAD CITIES SITE METEOROLOGICAL DATA 1/78 - 12/87

Note: Based on Reference 2 of Section F.2 and the formulas in Sections B.3 and B.4 of Appendix B.

X/Q is used for beta air, beta skin, and inhalation dose pathways. See Sections A.1.2, A.1.3, and A.1.4.2 of Appendix A.

D/Q is used for produce and leafy vegetable pathways. See Section A.1.4 of Appendix A.

Radius is the approximate distance from midpoint between gaseous effluent release points to location of highest X/Q or D/Q at or beyond the unrestricted area boundary (UAB)

Table F-5a

X/Q and D/Q Maxima at or Beyond the Restricted Area Boundary

Downwind Direction	Elevated(Stack) Release				Mixed Mode(Vent) Release			Ground Level Release		
	Radius (meters)	X/Q (sec/m**3)	Radius (meters)	D/Q (1/m**2)	Radius (meters)	X/Q (sec/m**3)	D/Q (1/m**2)	Radius (meters)	X/Q (sec/m**3)	D/Q (1/m**2)
N	4400.	1.344E-08	420.	1.244E-09	219.	3.171E-06	1.377E-08	219.	3.908E-05	8.926E-08
NNE	480.	2.173E-08	420.	2.103E-09	224.	2.086E-06	1.548E-08	224.	3.155E-05	1.096E-07
NE	4828.	1.287E-08	420.	1.006E-09	265.	1.070E-06	6.653E-09	265.	2.583E-05	7.200E-08
ENE	4400.	1.091E-08	420.	1.010E-09	393.	5.774E-07	5.329E-09	393.	9.932E-06	3.539E-08
E	3600.	1.513E-08	867.	1.319E-09	867.	3.073E-07	3.999E-09	867.	3.485E-06	1.525E-08
ESE	3600.	2.126E-08	924.	1.688E-09	924.	2.949E-07	4.507E-09	924.	2.997E-06	1.544E-08
SE	4023.	1.758E-08	1010.	1.126E-09	1010.	1.657E-07	2.875E-09	1010.	1.611E-06	8.445E-09
SSE	4023.	1.259E-08	1059.	7.178E-10	1059.	1.024E-07	1.611E-09	1059.	1.080E-06	5.287E-09
S	4400.	1.005E-08	1500.	4.437E-10	762.	1.070E-07	1.511E-09	762.	1.672E-06	7.035E-09
SSW	4400.	8.621E-09	420.	4.004E-10	335.	4.092E-07	3.719E-09	335.	7.714E-06	2.774E-08
SW	4400.	1.102E-08	1500.	4.856E-10	232.	1.173E-06	7.186E-09	232.	2.231E-05	6.181E-08
WSW	4400.	1.123E-08	1500.	4.674E-10	189.	2.260E-06	1.271E-08	189.	3.588E-05	1.002E-07
W	4828.	1.139E-08	1500.	4.704E-10	189.	3.196E-06	1.355E-08	189.	5.242E-05	1.109E-07
WNW	4828.	9.486E-09	420.	4.079E-10	183.	5.215E-06	1.491E-08	183.	8.197E-05	1.362E-07
NW	4828.	9.752E-09	420.	6.595E-10	210.	2.909E-06	1.002E-08	210.	5.006E-05	9.064E-08
NNW	4400.	1.045E-08	420.	1.027E-09	224.	3.092E-06	1.192E-08	224.	4.464E-05	8.717E-08

QUAD CITIES SITE METEOROLOGICAL DATA 1/78 - 12/87

Table F-6

D/Q at the Nearest Milk Cow and Meat Animal Locations within 5 miles

Downwind Direction	Nearest Milk Cow D/Q(1/m**2)				Nearest Meat Animal D/Q(1/m**2)			
	Radius (meters)	Elevated Release	Mixed Release	Ground Release	Radius (meters)	Elevated Release	Mixed Release	Ground Release
N	8000	1.019E-10	1.079E-10	2.350E-10	4000	2.024E-10	3.355E-10	8.079E-10
NNE	8000	1.354E-10	1.475E-10	2.977E-10	5600	2.357E-10	2.662E-10	5.642E-10
NE	8000	9.339E-11	9.377E-11	2.488E-10	8000	9.339E-11	9.377E-11	2.488E-10
ENE	8000	9.066E-11	9.792E-11	2.187E-10	4800	1.946E-10	2.262E-10	5.451E-10
E	8000	1.364E-10	1.620E-10	3.260E-10	4800	2.934E-10	3.775E-10	8.126E-10
ESE	5600	3.436E-10	3.656E-10	6.942E-10	4800	4.243E-10	4.692E-10	9.129E-10
SE	8000	1.542E-10	1.454E-10	2.319E-10	7600	1.680E-10	1.587E-10	2.544E-10
SSE	8000	1.026E-10	9.303E-11	1.567E-10	4000	2.748E-10	2.840E-10	5.391E-10
S	8000	7.650E-11	6.524E-11	1.220E-10	2400	3.247E-10	4.141E-10	1.023E-09
SSW	8000	6.616E-11	6.303E-11	1.351E-10	8000	6.616E-11	6.303E-11	1.351E-10
SW	8000	8.419E-11	8.742E-11	1.766E-10	4000	2.227E-10	2.662E-10	6.071E-10
WSW	8000	8.454E-11	1.002E-10	2.146E-10	4800	1.799E-10	2.317E-10	5.348E-10
W	8000	8.206E-11	9.545E-11	2.374E-10	3600	2.429E-10	3.461E-10	9.823E-10
WNW	8000	6.761E-11	8.718E-11	2.788E-10	5600	1.173E-10	1.585E-10	5.284E-10
NW	8000	7.046E-11	7.767E-11	2.249E-10	6400	1.007E-10	1.131E-10	3.357E-10
NNW	8000	7.938E-11	9.082E-11	2.369E-10	3600	2.444E-10	3.316E-10	9.803E-10

Quad Cities Site Meteorological Data 1/78 - 12/87

Note: Based on Reference 2 of Section F 2 and the formulas in Section B.4 of Appendix B.

Table F-7

Maximum Offsite Finite Plume Gamma Dose Factors Based on 1 cm Depth at the Unrestricted Area Boundary for Kr-83m

Downwind Direction	Unrestricted Area Bound (meters)	Elevated(Stack) Release Radius (meters)	S (mrad/yr)/(uCi/sec)	SBAR	Mixed Mode(Vent) Release Radius (meters)	V (mrad/yr)/(uCi/sec)	VBAR	Ground Level Release Radius (meters)	G (mrad/yr)/(uCi/sec)	GBAR
N	864.	864.	1.193E-06	8.998E-07	864.	4.094E-05	3.087E-05	864.	3.885E-04	2.929E-04
NNE	1029.	1029.	1.785E-06	1.346E-06	1029.	2.796E-05	2.108E-05	1029.	2.651E-04	1.999E-04
NE	1212.	1212.	9.747E-07	7.349E-07	1212.	1.639E-05	1.236E-05	1212.	2.162E-04	1.630E-04
ENE	1367.	1367.	9.035E-07	6.812E-07	1367.	1.409E-05	1.063E-05	1367.	1.373E-04	1.036E-04
E	1170.	1170.	1.378E-06	1.039E-06	1170.	2.602E-05	1.962E-05	1170.	2.220E-04	1.674E-04
ESE	1170.	1170.	1.775E-06	1.338E-06	1170.	2.752E-05	2.075E-05	1170.	2.113E-04	1.593E-04
SE	1189.	1189.	1.286E-06	9.695E-07	1189.	1.748E-05	1.318E-05	1189.	1.248E-04	9.407E-05
SSE	1422.	1422.	9.303E-07	7.014E-07	1422.	9.663E-06	7.286E-06	1422.	6.648E-05	5.012E-05
S	1198.	1198.	4.932E-07	3.719E-07	1198.	8.591E-06	6.478E-06	1198.	8.157E-05	6.150E-05
SSW	2140.	2140.	6.664E-07	5.025E-07	2140.	5.469E-06	4.124E-06	2140.	3.670E-05	2.767E-05
SW	1372.	1372.	6.134E-07	4.625E-07	1372.	1.175E-05	8.862E-06	1372.	1.164E-04	8.775E-05
WSW	823.	823.	4.376E-07	3.300E-07	823.	2.665E-05	2.010E-05	823.	3.016E-04	2.274E-04
W	713.	713.	4.936E-07	3.722E-07	713.	4.059E-05	3.060E-05	713.	5.263E-04	3.968E-04
WNW	713.	713.	4.839E-07	3.648E-07	713.	5.484E-05	4.135E-05	713.	7.361E-04	5.550E-04
NW	823.	823.	8.023E-07	6.049E-07	823.	3.493E-05	2.634E-05	823.	4.707E-04	3.549E-04
NNW	1481.	1481.	9.575E-07	7.220E-07	1481.	1.950E-05	1.470E-05	1481.	1.814E-04	1.368E-04

QUAD CITIES SITE METEOROLOGICAL DATA 1/78 - 12/87

Note: Based on References 1 and 2 of Section F.2 and the formulas in Sections B.5 and B.6 of Appendix B.

Table F-7 (Continued)

Maximum Offsite Finite Plume Gamma Dose Factors Based on 1 cm Depth at the Unrestricted Area Boundary for Kr-85m

Downwind Direction	Unrestricted Area Bound (meters)	Elevated(Stack) Release Radius (meters)	S (mrad/yr)/(uCi/sec)	SBAR	Mixed Mode(Vent) Release Radius (meters)	V (mrad/yr)/(uCi/sec)	VBAR	Ground Level Release Radius (meters)	G (mrad/yr)/(uCi/sec)	GBAR
N	864.	864.	1.266E-04	1.225E-04	864.	4.908E-04	4.728E-04	864.	2.089E-03	2.000E-03
NNE	1029.	1029.	1.322E-04	1.278E-04	1029.	4.358E-04	4.204E-04	1029.	1.591E-03	1.525E-03
NE	1212.	1212.	8.448E-05	8.172E-05	1212.	2.793E-04	2.694E-04	1212.	1.383E-03	1.326E-03
ENE	1367.	1367.	5.783E-05	5.593E-05	1367.	2.056E-04	1.983E-04	1367.	9.249E-04	8.872E-04
E	1170.	1170.	8.118E-05	7.850E-05	1170.	3.308E-04	3.187E-04	1170.	1.393E-03	1.336E-03
ESE	1170.	1170.	1.067E-04	1.032E-04	1170.	3.662E-04	3.530E-04	1170.	1.337E-03	1.282E-03
SE	1189.	1189.	9.118E-05	8.820E-05	1189.	2.618E-04	2.525E-04	1189.	8.091E-04	7.760E-04
SSE	1422.	1422.	5.797E-05	5.606E-05	1422.	1.518E-04	1.464E-04	1422.	4.523E-04	4.340E-04
S	1198.	1198.	5.611E-05	5.428E-05	1198.	1.469E-04	1.417E-04	1198.	5.192E-04	4.978E-04
SSW	2140.	2140.	3.024E-05	2.924E-05	2140.	7.862E-05	7.579E-05	2140.	2.775E-04	2.663E-04
SW	1372.	1372.	5.402E-05	5.226E-05	1372.	1.697E-04	1.636E-04	1372.	7.514E-04	7.204E-04
WSW	823.	823.	8.767E-05	8.484E-05	823.	3.499E-04	3.372E-04	823.	1.633E-03	1.564E-03
W	713.	713.	1.112E-04	1.076E-04	713.	4.644E-04	4.473E-04	713.	2.573E-03	2.461E-03
WNW	713.	713.	1.000E-04	9.678E-05	713.	5.046E-04	4.854E-04	713.	3.454E-03	3.302E-03
NW	823.	823.	9.794E-05	9.476E-05	823.	3.993E-04	3.846E-04	823.	2.406E-03	2.302E-03
NNW	1481.	1481.	6.223E-05	6.018E-05	1481.	2.449E-04	2.360E-04	1481.	1.147E-03	1.099E-03

QUAD CITIES SITE METEOROLOGICAL DATA 1/78 - 12/87

Table F-7 (Continued)

Maximum Offsite Finite Plume Gamma Dose Factors Based on 1 cm Depth at the Unrestricted Area Boundary for Kr-85

Downwind Direction	Unrestricted Area Bound (meters)	Elevated(Stack) Release Radius (meters)	S (mrad/yr)/(uCi/sec)	SBAR	Mixed Mode(Vent) Release Radius (meters)	V (mrad/yr)/(uCi/sec)	VBAR	Ground Level Release Radius (meters)	G (mrad/yr)/(uCi/sec)	GBAR
N	864.	864.	1.753E-06	1.695E-06	864.	5.814E-06	5.622E-06	864.	2.347E-05	2.269E-05
NNE	1029.	1029.	1.834E-06	1.773E-06	1029.	5.237E-06	5.064E-06	1029.	1.792E-05	1.733E-05
NE	1212.	1212.	1.185E-06	1.146E-06	1212.	3.399E-06	3.287E-06	1212.	1.595E-05	1.542E-05
ENE	1367.	1367.	8.083E-07	7.817E-07	1367.	2.473E-06	2.391E-06	1367.	1.072E-05	1.037E-05
E	1170.	1170.	1.116E-06	1.079E-06	1170.	3.908E-06	3.779E-06	1170.	1.578E-05	1.525E-05
ESE	1170.	1170.	1.461E-06	1.413E-06	1170.	4.335E-06	4.192E-06	1170.	1.510E-05	1.460E-05
SE	1189.	1189.	1.259E-06	1.217E-06	1189.	3.118E-06	3.015E-06	1189.	9.186E-06	8.883E-06
SSE	1422.	1422.	8.057E-07	7.791E-07	1422.	1.829E-06	1.769E-06	1422.	5.211E-06	5.039E-06
S	1198.	1198.	7.916E-07	7.655E-07	1198.	1.774E-06	1.716E-06	1198.	5.956E-06	5.760E-06
SSW	2140.	2140.	4.230E-07	4.090E-07	2140.	9.632E-07	9.314E-07	2140.	3.375E-06	3.264E-06
SW	1372.	1372.	7.572E-07	7.322E-07	1372.	2.039E-06	1.971E-06	1372.	8.743E-06	8.454E-06
WSW	823.	823.	1.239E-06	1.198E-06	823.	4.157E-06	4.020E-06	823.	1.828E-05	1.768E-05
W	713.	713.	1.570E-06	1.519E-06	713.	5.481E-06	5.300E-06	713.	2.847E-05	2.753E-05
WNW	713.	713.	1.414E-06	1.367E-06	713.	5.906E-06	5.711E-06	713.	3.816E-05	3.690E-05
NW	823.	823.	1.372E-06	1.327E-06	823.	4.734E-06	4.578E-06	823.	2.700E-05	2.610E-05
NNW	1481.	1481.	8.575E-07	8.292E-07	1481.	2.931E-06	2.834E-06	1481.	1.350E-05	1.305E-05

QUAD CITIES SITE METEOROLOGICAL DATA 1/78 - 12/87

Table F-7 (Continued)

Maximum Offsite Finite Plume Gamma Dose Factors Based on 1 cm Depth at the Unrestricted Area Boundary for Kr-87

Downwind Direction	Unrestricted Area Bound (meters)	Elevated(Stack) Release Radius (meters)	S (mrad/yr)/(uCi/sec)	SBAR	Mixed Mode(Vent) Release Radius (meters)	V (mrad/yr)/(uCi/sec)	VBAR	Ground Level Release Radius (meters)	G (mrad/yr)/(uCi/sec)	GBAR
N	864.	864.	6.162E-04	5.987E-04	864.	1.698E-03	1.649E-03	864.	5.808E-03	5.639E-03
NNE	1029.	1029.	6.389E-04	6.207E-04	1029.	1.557E-03	1.512E-03	1029.	4.508E-03	4.377E-03
NE	1212.	1212.	4.118E-04	4.001E-04	1212.	9.907E-04	9.622E-04	1212.	3.742E-03	3.633E-03
ENE	1367.	1367.	2.753E-04	2.675E-04	1367.	7.128E-04	6.923E-04	1367.	2.504E-03	2.432E-03
E	1170.	1170.	3.853E-04	3.743E-04	1170.	1.146E-03	1.113E-03	1170.	3.929E-03	3.815E-03
ESE	1170.	1170.	5.023E-04	4.880E-04	1170.	1.270E-03	1.234E-03	1170.	3.806E-03	3.695E-03
SE	1189.	1189.	4.324E-04	4.201E-04	1189.	9.253E-04	8.986E-04	1189.	2.291E-03	2.225E-03
SSE	1422.	1422.	2.723E-04	2.646E-04	1422.	5.290E-04	5.137E-04	1422.	1.256E-03	1.220E-03
S	1198.	1198.	2.704E-04	2.628E-04	1198.	5.202E-04	5.052E-04	1198.	1.424E-03	1.383E-03
SSW	2140.	2140.	1.354E-04	1.315E-04	2140.	2.615E-04	2.540E-04	2140.	7.068E-04	6.863E-04
SW	1372.	1372.	2.581E-04	2.507E-04	1372.	5.872E-04	5.702E-04	1372.	2.001E-03	1.943E-03
WSW	823.	823.	4.379E-04	4.255E-04	823.	1.238E-03	1.202E-03	823.	4.588E-03	4.454E-03
W	713.	713.	5.602E-04	5.443E-04	713.	1.632E-03	1.585E-03	713.	7.313E-03	7.101E-03
WNW	713.	713.	5.039E-04	4.896E-04	713.	1.729E-03	1.679E-03	713.	9.810E-03	9.525E-03
NW	823.	823.	4.859E-04	4.721E-04	823.	1.388E-03	1.348E-03	823.	6.654E-03	6.461E-03
NNW	1481.	1481.	2.903E-04	2.820E-04	1481.	8.192E-04	7.955E-04	1481.	2.955E-03	2.869E-03

QUAD CITIES SITE METEOROLOGICAL DATA 1/78 - 12/87

Table F-7 (Continued)

Maximum Offsite Finite Plume Gamma Dose Factors Based on 1 cm Depth at the Unrestricted Area Boundary for Kr-88

Downwind Direction	Unrestricted Area Bound (meters)	Elevated(Stack) Release Radius (meters)	S (mrad/yr)/(uCi/sec)	SBAR	Mixed Mode(Vent) Release Radius (meters)	V (mrad/yr)/(uCi/sec)	VBAR	Ground Level Release Radius (meters)	G (mrad/yr)/(uCi/sec)	GBAR
N	864.	864.	1.594E-03	1.551E-03	864.	4.220E-03	4.104E-03	864.	1.481E-02	1.438E-02
NNE	1029.	1029.	1.665E-03	1.621E-03	1029.	3.885E-03	3.779E-03	1029.	1.143E-02	1.111E-02
NE	1212.	1212.	1.083E-03	1.054E-03	1212.	2.515E-03	2.447E-03	1212.	9.828E-03	9.548E-03
ENE	1367.	1367.	7.271E-04	7.078E-04	1367.	1.805E-03	1.756E-03	1367.	6.599E-03	6.411E-03
E	1170.	1170.	1.002E-03	9.755E-04	1170.	2.853E-03	2.775E-03	1170.	1.001E-02	9.728E-03
ESE	1170.	1170.	1.301E-03	1.266E-03	1170.	3.165E-03	3.078E-03	1170.	9.639E-03	9.364E-03
SE	1189.	1189.	1.124E-03	1.094E-03	1189.	2.307E-03	2.244E-03	1189.	5.837E-03	5.671E-03
SSE	1422.	1422.	7.148E-04	6.957E-04	1422.	1.340E-03	1.303E-03	1422.	3.258E-03	3.165E-03
S	1198.	1198.	7.126E-04	6.937E-04	1198.	1.312E-03	1.276E-03	1198.	3.701E-03	3.596E-03
SSW	2140.	2140.	3.636E-04	3.539E-04	2140.	6.814E-04	6.628E-04	2140.	1.963E-03	1.908E-03
SW	1372.	1372.	6.784E-04	6.604E-04	1372.	1.485E-03	1.444E-03	1372.	5.313E-03	5.161E-03
WSW	823.	823.	1.144E-03	1.114E-03	823.	3.068E-03	2.984E-03	823.	1.160E-02	1.127E-02
W	713.	713.	1.459E-03	1.420E-03	713.	4.024E-03	3.913E-03	713.	1.827E-02	1.774E-02
WNW	713.	713.	1.313E-03	1.278E-03	713.	4.274E-03	4.156E-03	713.	2.451E-02	2.379E-02
NW	823.	823.	1.265E-03	1.231E-03	823.	3.452E-03	3.357E-03	823.	1.699E-02	1.650E-02
NNW	1481.	1481.	7.588E-04	7.386E-04	1481.	2.083E-03	2.026E-03	1481.	8.020E-03	7.791E-03

QUAD CITIES SITE METEOROLOGICAL DATA 1/78 - 12/87

Table F-7 (Continued)

Maximum Offsite Finite Plume Gamma Dose Factors Based on 1 cm Depth at the Unrestricted Area Boundary for Kr-89

Downwind Direction	Unrestricted Area Bound (meters)	Elevated(Stack) Release Radius (meters)	S (mrad/yr)/(uCi/sec)	SBAR	Mixed Mode(Vent) Release Radius (meters)	V (mrad/yr)/(uCi/sec)	VBAR	Ground Level Release Radius (meters)	G (mrad/yr)/(uCi/sec)	GBAR
N	864.	864.	7.380E-04	7.172E-04	864.	1.425E-03	1.385E-03	864.	2.034E-03	1.976E-03
NNE	1029.	1029.	6.261E-04	6.085E-04	1029.	1.149E-03	1.116E-03	1029.	1.603E-03	1.557E-03
NE	1212.	1212.	3.167E-04	3.078E-04	1212.	5.081E-04	4.936E-04	1212.	7.823E-04	7.598E-04
ENE	1367.	1367.	2.047E-04	1.989E-04	1367.	3.701E-04	3.595E-04	1367.	5.059E-04	4.914E-04
E	1170.	1170.	3.698E-04	3.594E-04	1170.	8.126E-04	7.894E-04	1170.	1.310E-03	1.273E-03
ESE	1170.	1170.	5.046E-04	4.904E-04	1170.	9.740E-04	9.462E-04	1170.	1.566E-03	1.522E-03
SE	1189.	1189.	4.116E-04	4.000E-04	1189.	6.659E-04	6.469E-04	1189.	9.264E-04	8.998E-04
SSE	1422.	1422.	2.003E-04	1.946E-04	1422.	2.810E-04	2.730E-04	1422.	3.822E-04	3.712E-04
S	1198.	1198.	2.189E-04	2.127E-04	1198.	3.175E-04	3.084E-04	1198.	4.622E-04	4.490E-04
SSW	2140.	2140.	5.751E-05	5.588E-05	2140.	7.519E-05	7.304E-05	2140.	8.761E-05	8.510E-05
SW	1372.	1372.	1.914E-04	1.860E-04	1372.	3.241E-04	3.149E-04	1372.	4.441E-04	4.313E-04
WSW	823.	823.	4.790E-04	4.655E-04	823.	1.113E-03	1.081E-03	823.	2.203E-03	2.140E-03
W	713.	713.	6.760E-04	6.569E-04	713.	1.569E-03	1.524E-03	713.	3.460E-03	3.361E-03
WNW	713.	713.	6.075E-04	5.904E-04	713.	1.513E-03	1.470E-03	713.	4.161E-03	4.041E-03
NW	823.	823.	5.447E-04	5.293E-04	823.	1.114E-03	1.082E-03	823.	2.198E-03	2.135E-03
NNW	1481.	1481.	2.270E-04	2.206E-04	1481.	3.806E-04	3.697E-04	1481.	3.958E-04	3.844E-04

QUAD CITIES SITE METEOROLOGICAL DATA 1/78 - 12/87

Table F-7 (Continued)

Maximum Offsite Finite Plume Gamma Dose Factors Based on 1 cm Depth at the Unrestricted Area Boundary for Kr-90

Downwind Direction	Unrestricted Area Bound (meters)	Elevated(Stack) Release Radius (meters)	S (mrad/yr)/(uCi/sec)	SBAR	Mixed Mode(Vent) Release Radius (meters)	V (mrad/yr)/(uCi/sec)	VBAR	Ground Level Release Radius (meters)	G (mrad/yr)/(uCi/sec)	GBAR
N	864.	864.	1.025E-04	9.947E-05	864.	1.001E-04	9.715E-05	864.	3.226E-05	3.128E-05
NNE	1029.	1029.	4.953E-05	4.807E-05	1029.	4.309E-05	4.181E-05	1029.	1.549E-05	1.502E-05
NE	1212.	1212.	1.210E-05	1.174E-05	1212.	7.167E-06	6.953E-06	1212.	2.958E-06	2.869E-06
ENE	1367.	1367.	8.572E-06	8.320E-06	1367.	7.121E-06	6.908E-06	1367.	3.357E-06	3.255E-06
E	1170.	1170.	2.876E-05	2.792E-05	1170.	3.061E-05	2.970E-05	1170.	1.687E-05	1.636E-05
ESE	1170.	1170.	4.141E-05	4.019E-05	1170.	3.846E-05	3.731E-05	1170.	2.748E-05	2.665E-05
SE	1189.	1189.	2.685E-05	2.606E-05	1189.	2.120E-05	2.056E-05	1189.	1.306E-05	1.267E-05
SSE	1422.	1422.	5.661E-06	5.494E-06	1422.	4.092E-06	3.970E-06	1422.	2.460E-06	2.385E-06
S	1198.	1198.	9.811E-06	9.523E-06	1198.	7.891E-06	7.656E-06	1198.	6.776E-06	6.571E-06
SSW	2140.	2140.	5.194E-07	5.040E-07	2140.	2.996E-07	2.907E-07	2140.	1.827E-07	1.772E-07
SW	1372.	1372.	6.788E-06	6.588E-06	1372.	6.147E-06	5.963E-06	1372.	3.347E-06	3.246E-06
WSW	823.	823.	5.697E-05	5.530E-05	823.	8.167E-05	7.923E-05	823.	8.406E-05	8.151E-05
W	713.	713.	1.054E-04	1.023E-04	713.	1.550E-04	1.504E-04	713.	1.486E-04	1.441E-04
WNW	713.	713.	9.367E-05	9.092E-05	713.	1.286E-04	1.247E-04	713.	1.211E-04	1.174E-04
NW	823.	823.	6.316E-05	6.131E-05	823.	6.467E-05	6.275E-05	823.	3.606E-05	3.497E-05
NNW	1481.	1481.	8.234E-06	7.992E-06	1481.	6.106E-06	5.924E-06	1481.	1.127E-06	1.093E-06

QUAD CITIES SITE METEOROLOGICAL DATA 1/78 - 12/87

Table F-7 (Continued)

Maximum Offsite Finite Plume Gamma Dose Factors Based on 1 cm Depth at the Unrestricted Area Boundary for Xe-131m

Downwind Direction	Unrestricted Area Bound (meters)	Elevated(Stack) Release Radius (meters)	S (mrad/yr)/(uCi/sec)	SBAR	Mixed Mode(Vent) Release Radius (meters)	V (mrad/yr)/(uCi/sec)	VBAR	Ground Level Release Radius (meters)	G (mrad/yr)/(uCi/sec)	GBAR
N	864.	864.	3.647E-06	3.327E-06	864.	4.407E-05	3.544E-05	864.	3.834E-04	2.985E-04
NNE	1029.	1029.	4.237E-06	3.798E-06	1029.	3.179E-05	2.595E-05	1029.	2.633E-04	2.057E-04
NE	1212.	1212.	2.587E-06	2.338E-06	1212.	1.947E-05	1.596E-05	1212.	2.279E-04	1.782E-04
ENE	1367.	1367.	1.965E-06	1.747E-06	1367.	1.602E-05	1.302E-05	1367.	1.466E-04	1.149E-04
E	1170.	1170.	2.839E-06	2.511E-06	1170.	2.808E-05	2.266E-05	1170.	2.237E-04	1.750E-04
ESE	1170.	1170.	3.680E-06	3.262E-06	1170.	2.997E-05	2.426E-05	1170.	2.118E-04	1.657E-04
SE	1189.	1189.	2.967E-06	2.654E-06	1189.	1.963E-05	1.599E-05	1189.	1.267E-04	9.918E-05
SSE	1422.	1422.	1.993E-06	1.769E-06	1422.	1.114E-05	9.095E-06	1422.	6.993E-05	5.482E-05
S	1198.	1198.	1.599E-06	1.463E-06	1198.	1.013E-05	8.309E-06	1198.	8.492E-05	6.642E-05
SSW	2140.	2140.	1.206E-06	1.050E-06	2140.	6.337E-06	5.144E-06	2140.	4.359E-05	3.422E-05
SW	1372.	1372.	1.650E-06	1.493E-06	1372.	1.332E-05	1.082E-05	1372.	1.252E-04	9.792E-05
WSW	823.	823.	2.220E-06	2.075E-06	823.	2.888E-05	2.335E-05	823.	2.959E-04	2.304E-04
W	713.	713.	2.761E-06	2.589E-06	713.	4.243E-05	3.407E-05	713.	4.991E-04	3.877E-04
WNW	713.	713.	2.521E-06	2.357E-06	713.	5.524E-05	4.391E-05	713.	6.941E-04	5.386E-04
NW	823.	823.	2.732E-06	2.507E-06	823.	3.710E-05	2.977E-05	823.	4.622E-04	3.593E-04
NNW	1481.	1481.	2.099E-06	1.868E-06	1481.	2.184E-05	1.759E-05	1481.	1.999E-04	1.561E-04

QUAD CITIES SITE METEOROLOGICAL DATA 1/78 - 12/87

Table F-7 (Continued)

Maximum Offsite Finite Plume Gamma Dose Factors Based on 1 cm Depth at the Unrestricted Area Boundary for Xe-133m

Downwind Direction	Unrestricted Area Bound (meters)	Elevated(Stack) Release Radius (meters)	S (mrad/yr)/(uCi/sec)	SBAR	Mixed Mode(Vent) Release Radius (meters)	V (mrad/yr)/(uCi/sec)	VBAR	Ground Level Release Radius (meters)	G (mrad/yr)/(uCi/sec)	GBAR
N	864.	864.	1.894E-05	1.812E-05	864.	1.039E-04	9.305E-05	864.	6.441E-04	5.482E-04
NNE	1029.	1029.	2.025E-05	1.928E-05	1029.	8.483E-05	7.710E-05	1029.	4.614E-04	3.957E-04
NE	1212.	1212.	1.285E-05	1.226E-05	1212.	5.369E-05	4.897E-05	1212.	4.033E-04	3.465E-04
ENE	1367.	1367.	9.011E-06	8.562E-06	1367.	4.123E-05	3.733E-05	1367.	2.642E-04	2.277E-04
E	1170.	1170.	1.267E-05	1.202E-05	1170.	6.835E-05	6.147E-05	1170.	3.977E-04	3.419E-04
ESE	1170.	1170.	1.660E-05	1.576E-05	1170.	7.460E-05	6.727E-05	1170.	3.783E-04	3.255E-04
SE	1189.	1189.	1.402E-05	1.334E-05	1189.	5.149E-05	4.671E-05	1189.	2.278E-04	1.962E-04
SSE	1422.	1422.	9.051E-06	8.594E-06	1422.	2.975E-05	2.704E-05	1422.	1.270E-04	1.096E-04
S	1198.	1198.	8.431E-06	8.074E-06	1198.	2.808E-05	2.563E-05	1198.	1.505E-04	1.293E-04
SSW	2140.	2140.	4.938E-06	4.658E-06	2140.	1.613E-05	1.459E-05	2140.	8.011E-05	6.932E-05
SW	1372.	1372.	8.224E-06	7.852E-06	1372.	3.413E-05	3.088E-05	1372.	2.212E-04	1.900E-04
WSW	823.	823.	1.283E-05	1.234E-05	823.	7.137E-05	6.430E-05	823.	4.990E-04	4.250E-04
W	713.	713.	1.619E-05	1.558E-05	713.	9.876E-05	8.833E-05	713.	8.170E-04	6.918E-04
WNW	713.	713.	1.461E-05	1.405E-05	713.	1.166E-04	1.029E-04	713.	1.121E-03	9.465E-04
NW	823.	823.	1.457E-05	1.396E-05	823.	8.573E-05	7.661E-05	823.	7.625E-04	6.468E-04
NNW	1481.	1481.	9.664E-06	9.184E-06	1481.	5.202E-05	4.667E-05	1481.	3.480E-04	2.982E-04

QUAD CITIES SITE METEOROLOGICAL DATA 1/78 - 12/87

Table F-7 (Continued)

Maximum Offsite Finite Plume Gamma Dose Factors Based on 1 cm Depth at the Unrestricted Area Boundary for Xe-133

Downwind Direction	Unrestricted Area Bound (meters)	Elevated(Stack) Release Radius (meters)	S (mrad/yr)/(uCi/sec)	SBAR (mrad/yr)/(uCi/sec)	Mixed Mode(Vent) Release Radius (meters)	V (mrad/yr)/(uCi/sec)	VBAR (mrad/yr)/(uCi/sec)	Ground Level Release Radius (meters)	G (mrad/yr)/(uCi/sec)	GBAR (mrad/yr)/(uCi/sec)
N	864.	864.	1.741E-05	1.678E-05	864.	1.161E-04	1.068E-04	864.	7.126E-04	6.308E-04
NNE	1029.	1029.	1.886E-05	1.810E-05	1029.	9.493E-05	8.825E-05	1029.	5.171E-04	4.609E-04
NE	1212.	1212.	1.186E-05	1.140E-05	1212.	5.974E-05	5.567E-05	1212.	4.541E-04	4.054E-04
ENE	1367.	1367.	8.561E-06	8.203E-06	1367.	4.602E-05	4.266E-05	1367.	2.989E-04	2.675E-04
E	1170.	1170.	1.214E-05	1.162E-05	1170.	7.658E-05	7.065E-05	1170.	4.478E-04	4.000E-04
ESE	1170.	1170.	1.606E-05	1.538E-05	1170.	8.356E-05	7.724E-05	1170.	4.264E-04	3.811E-04
SE	1189.	1189.	1.340E-05	1.286E-05	1189.	5.757E-05	5.344E-05	1189.	2.572E-04	2.301E-04
SSE	1422.	1422.	8.767E-06	8.399E-06	1422.	3.309E-05	3.076E-05	1422.	1.438E-04	1.289E-04
S	1198.	1198.	7.778E-06	7.503E-06	1198.	3.131E-05	2.919E-05	1198.	1.695E-04	1.513E-04
SSW	2140.	2140.	4.975E-06	4.743E-06	2140.	1.790E-05	1.657E-05	2140.	9.115E-05	8.184E-05
SW	1372.	1372.	7.778E-06	7.484E-06	1372.	3.803E-05	3.523E-05	1372.	2.491E-04	2.224E-04
WSW	823.	823.	1.135E-05	1.099E-05	823.	7.956E-05	7.348E-05	823.	5.527E-04	4.896E-04
W	713.	713.	1.419E-05	1.375E-05	713.	1.096E-04	1.006E-04	713.	8.936E-04	7.872E-04
WNW	713.	713.	1.281E-05	1.241E-05	713.	1.283E-04	1.166E-04	713.	1.218E-03	1.070E-03
NW	823.	823.	1.308E-05	1.262E-05	823.	9.513E-05	8.731E-05	823.	8.374E-04	7.389E-04
NNW	1481.	1481.	9.317E-06	8.932E-06	1481.	5.833E-05	5.372E-05	1481.	3.907E-04	3.480E-04

QUAD CITIES SITE METEOROLOGICAL DATA 1/78 - 12/87

Table F-7 (Continued)

Maximum Offsite Finite Plume Gamma Dose Factors Based on 1 cm Depth at the Unrestricted Area Boundary for Xe-135m

Downwind Direction	Unrestricted Area Bound (meters)	Elevated(Stack) Release Radius (meters)	S (mrad/yr)/(uCi/sec)	SBAR	Mixed Mode(Vent) Release Radius (meters)	V (mrad/yr)/(uCi/sec)	VBAR	Ground Level Release Radius (meters)	G (mrad/yr)/(uCi/sec)	GBAR
N	864.	864.	2.899E-04	2.803E-04	864.	8.530E-04	8.236E-04	864.	2.453E-03	2.363E-03
NNE	1029.	1029.	2.877E-04	2.781E-04	1029.	7.645E-04	7.384E-04	1029.	1.941E-03	1.870E-03
NE	1212.	1212.	1.756E-04	1.697E-04	1212.	4.447E-04	4.296E-04	1212.	1.382E-03	1.332E-03
ENE	1367.	1367.	1.163E-04	1.125E-04	1367.	3.217E-04	3.107E-04	1367.	9.117E-04	8.789E-04
E	1170.	1170.	1.741E-04	1.683E-04	1170.	5.632E-04	5.438E-04	1170.	1.662E-03	1.602E-03
ESE	1170.	1170.	2.308E-04	2.231E-04	1170.	6.317E-04	6.100E-04	1170.	1.681E-03	1.620E-03
SE	1189.	1189.	1.959E-04	1.894E-04	1189.	4.536E-04	4.381E-04	1189.	1.003E-03	9.670E-04
SSE	1422.	1422.	1.166E-04	1.127E-04	1422.	2.398E-04	2.316E-04	1422.	5.084E-04	4.901E-04
S	1198.	1198.	1.163E-04	1.124E-04	1198.	2.423E-04	2.340E-04	1198.	5.714E-04	5.507E-04
SSW	2140.	2140.	5.156E-05	4.984E-05	2140.	1.028E-04	9.925E-05	2140.	2.160E-04	2.082E-04
SW	1372.	1372.	1.099E-04	1.063E-04	1372.	2.682E-04	2.590E-04	1372.	7.263E-04	7.000E-04
WSW	823.	823.	1.979E-04	1.914E-04	823.	6.335E-04	6.118E-04	823.	2.055E-03	1.979E-03
W	713.	713.	2.585E-04	2.499E-04	713.	8.524E-04	8.229E-04	713.	3.381E-03	3.255E-03
WNW	713.	713.	2.323E-04	2.246E-04	713.	8.874E-04	8.564E-04	713.	4.500E-03	4.332E-03
NW	823.	823.	2.227E-04	2.153E-04	823.	6.913E-04	6.674E-04	823.	2.772E-03	2.670E-03
NNW	1481.	1481.	1.264E-04	1.222E-04	1481.	3.575E-04	3.452E-04	1481.	9.461E-04	9.117E-04

QUAD CITIES SITE METEOROLOGICAL DATA 1/78 - 12/87

Table F-7 (Continued)

Maximum Offsite Finite Plume Gamma Dose Factors Based on 1 cm Depth at the Unrestricted Area Boundary for Xe-135

Downwind Direction	Unrestricted Area Bound (meters)	Elevated(Stack) Release Radius (meters)	S (mrad/yr)/(uCi/sec)	SBAR	Mixed Mode(Vent) Release Radius (meters)	V (mrad/yr)/(uCi/sec)	VBAR	Ground Level Release Radius (meters)	G (mrad/yr)/(uCi/sec)	GBAR
N	864.	864.	1.787E-04	1.729E-04	864.	6.779E-04	6.555E-04	864.	2.851E-03	2.753E-03
NNE	1029.	1029.	1.867E-04	1.807E-04	1029.	6.045E-04	5.847E-04	1029.	2.178E-03	2.103E-03
NE	1212.	1212.	1.196E-04	1.158E-04	1212.	3.894E-04	3.766E-04	1212.	1.917E-03	1.851E-03
ENE	1367.	1367.	8.192E-05	7.928E-05	1367.	2.860E-04	2.766E-04	1367.	1.285E-03	1.242E-03
E	1170.	1170.	1.145E-04	1.108E-04	1170.	4.571E-04	4.420E-04	1170.	1.913E-03	1.848E-03
ESE	1170.	1170.	1.504E-04	1.456E-04	1170.	5.067E-04	4.900E-04	1170.	1.833E-03	1.771E-03
SE	1189.	1189.	1.287E-04	1.246E-04	1189.	3.627E-04	3.508E-04	1189.	1.113E-03	1.075E-03
SSE	1422.	1422.	8.204E-05	7.939E-05	1422.	2.113E-04	2.044E-04	1422.	6.264E-04	6.052E-04
S	1198.	1198.	7.961E-05	7.705E-05	1198.	2.044E-04	1.977E-04	1198.	7.175E-04	6.931E-04
SSW	2140.	2140.	4.304E-05	4.165E-05	2140.	1.103E-04	1.067E-04	2140.	3.945E-04	3.812E-04
SW	1372.	1372.	7.655E-05	7.409E-05	1372.	2.359E-04	2.282E-04	1372.	1.046E-03	1.010E-03
WSW	823.	823.	1.242E-04	1.202E-04	823.	4.833E-04	4.674E-04	823.	2.225E-03	2.149E-03
W	713.	713.	1.573E-04	1.522E-04	713.	6.395E-04	6.183E-04	713.	3.478E-03	3.358E-03
WNW	713.	713.	1.415E-04	1.370E-04	713.	6.923E-04	6.693E-04	713.	4.660E-03	4.498E-03
NW	823.	823.	1.384E-04	1.340E-04	823.	5.510E-04	5.328E-04	823.	3.277E-03	3.164E-03
NNW	1481.	1481.	8.796E-05	8.512E-05	1481.	3.406E-04	3.293E-04	1481.	1.605E-03	1.550E-03

QUAD CITIES SITE METEOROLOGICAL DATA 1/78 - 12/87

Table F-7 (Continued)

Maximum Offsite Finite Plume Gamma Dose Factors Based on 1 cm Depth at the Unrestricted Area Boundary for Xe-137

Downwind Direction	Unrestricted Area Bound (meters)	Elevated(Stack) Release Radius (meters)	S (mrad/yr)/(uCi/sec)	SBAR	Mixed Mode(Vent) Release Radius (meters)	V (mrad/yr)/(uCi/sec)	VBAR	Ground Level Release Radius (meters)	G (mrad/yr)/(uCi/sec)	GBAR
N	864.	864.	9.587E-05	9.280E-05	864.	2.169E-04	2.100E-04	864.	3.650E-04	3.532E-04
NNE	1029.	1029.	8.396E-05	8.127E-05	1029.	1.789E-04	1.731E-04	1029.	2.883E-04	2.789E-04
NE	1212.	1212.	4.406E-05	4.265E-05	1212.	8.327E-05	8.059E-05	1212.	1.506E-04	1.457E-04
ENE	1367.	1367.	2.876E-05	2.784E-05	1367.	6.062E-05	5.866E-05	1367.	9.706E-05	9.392E-05
E	1170.	1170.	5.014E-05	4.854E-05	1170.	1.280E-04	1.239E-04	1170.	2.375E-04	2.298E-04
ESE	1170.	1170.	6.821E-05	6.603E-05	1170.	1.517E-04	1.468E-04	1170.	2.747E-04	2.658E-04
SE	1189.	1189.	5.604E-05	5.425E-05	1189.	1.044E-04	1.010E-04	1189.	1.631E-04	1.578E-04
SSE	1422.	1422.	2.842E-05	2.751E-05	1422.	4.591E-05	4.443E-05	1422.	6.975E-05	6.749E-05
S	1198.	1198.	3.027E-05	2.930E-05	1198.	5.064E-05	4.901E-05	1198.	8.267E-05	7.999E-05
SSW	2140.	2140.	8.925E-06	8.639E-06	2140.	1.344E-05	1.301E-05	2140.	1.753E-05	1.696E-05
SW	1372.	1372.	2.697E-05	2.611E-05	1372.	5.261E-05	5.091E-05	1372.	8.334E-05	8.064E-05
WSW	823.	823.	6.236E-05	6.037E-05	823.	1.682E-04	1.628E-04	823.	3.760E-04	3.638E-04
W	713.	713.	8.655E-05	8.378E-05	713.	2.349E-04	2.274E-04	713.	5.968E-04	5.775E-04
WNW	713.	713.	7.777E-05	7.529E-05	713.	2.298E-04	2.224E-04	713.	7.354E-04	7.115E-04
NW	823.	823.	7.090E-05	6.863E-05	823.	1.705E-04	1.650E-04	823.	3.973E-04	3.845E-04
NNW	1481.	1481.	3.192E-05	3.090E-05	1481.	6.298E-05	6.095E-05	1481.	7.935E-05	7.678E-05

QUAD CITIES SITE METEOROLOGICAL DATA 1/78 - 12/87

Table F-7 (Continued)

Maximum Offsite Finite Plume Gamma Dose Factors Based on 1 cm Depth at the Unrestricted Area Boundary for Xe-138

Downwind Direction	Unrestricted Area Bound (meters)	Elevated(Stack) Release Radius (meters)	S (mrad/yr)/(uCi/sec)	SBAR	Mixed Mode(Vent) Release Radius (meters)	V (mrad/yr)/(uCi/sec)	VBAR	Ground Level Release Radius (meters)	G (mrad/yr)/(uCi/sec)	GBAR
N	864.	864.	7.602E-04	7.388E-04	864.	1.909E-03	1.854E-03	864.	5.007E-03	4.860E-03
NNE	1029.	1029.	7.527E-04	7.315E-04	1029.	1.728E-03	1.679E-03	1029.	3.991E-03	3.874E-03
NE	1212.	1212.	4.600E-04	4.471E-04	1212.	1.005E-03	9.759E-04	1212.	2.814E-03	2.731E-03
ENE	1367.	1367.	3.014E-04	2.929E-04	1367.	7.202E-04	6.995E-04	1367.	1.859E-03	1.804E-03
E	1170.	1170.	4.505E-04	4.378E-04	1170.	1.258E-03	1.222E-03	1170.	3.418E-03	3.318E-03
ESE	1170.	1170.	5.943E-04	5.775E-04	1170.	1.414E-03	1.373E-03	1170.	3.473E-03	3.371E-03
SE	1189.	1189.	5.059E-04	4.916E-04	1189.	1.022E-03	9.929E-04	1189.	2.076E-03	2.015E-03
SSE	1422.	1422.	2.995E-04	2.910E-04	1422.	5.384E-04	5.229E-04	1422.	1.049E-03	1.018E-03
S	1198.	1198.	3.027E-04	2.941E-04	1198.	5.469E-04	5.312E-04	1198.	1.174E-03	1.139E-03
SSW	2140.	2140.	1.297E-04	1.260E-04	2140.	2.269E-04	2.204E-04	2140.	4.390E-04	4.262E-04
SW	1372.	1372.	2.843E-04	2.763E-04	1372.	6.005E-04	5.832E-04	1372.	1.480E-03	1.436E-03
WSW	823.	823.	5.252E-04	5.104E-04	823.	1.428E-03	1.387E-03	823.	4.220E-03	4.095E-03
W	713.	713.	6.885E-04	6.691E-04	713.	1.914E-03	1.859E-03	713.	6.917E-03	6.712E-03
WNW	713.	713.	6.188E-04	6.014E-04	713.	1.974E-03	1.917E-03	713.	9.182E-03	8.910E-03
NW	823.	823.	5.894E-04	5.728E-04	823.	1.550E-03	1.505E-03	823.	5.640E-03	5.474E-03
NNW	1481.	1481.	3.244E-04	3.152E-04	1481.	7.909E-04	7.681E-04	1481.	1.903E-03	1.847E-03

QUAD CITIES SITE METEOROLOGICAL DATA 1/78 - 12/87

Table F-7 (Continued)

Maximum Offsite Finite Plume Gamma Dose Factors Based on 1 cm Depth at the Unrestricted Area Boundary for Ar-41

Downwind Direction	Unrestricted Area Bound (meters)	Elevated(Stack) Release Radius (meters)	S (mrad/yr)/(uCi/sec)	SBAR	Mixed Mode(Vent) Release Radius (meters)	V (mrad/yr)/(uCi/sec)	VBAR	Ground Level Release Radius (meters)	G (mrad/yr)/(uCi/sec)	GBAR
N	864.	864.	9.169E-04	8.875E-04	864.	2.639E-03	2.555E-03	864.	9.453E-03	9.150E-03
NNE	1029.	1029.	9.534E-04	9.229E-04	1029.	2.410E-03	2.333E-03	1029.	7.295E-03	7.061E-03
NE	1212.	1212.	6.143E-04	5.947E-04	1212.	1.545E-03	1.496E-03	1212.	6.170E-03	5.973E-03
ENE	1367.	1367.	4.130E-04	3.998E-04	1367.	1.116E-03	1.080E-03	1367.	4.131E-03	3.999E-03
E	1170.	1170.	5.748E-04	5.564E-04	1170.	1.782E-03	1.725E-03	1170.	6.371E-03	6.167E-03
ESE	1170.	1170.	7.494E-04	7.254E-04	1170.	1.976E-03	1.913E-03	1170.	6.148E-03	5.951E-03
SE	1189.	1189.	6.447E-04	6.241E-04	1189.	1.435E-03	1.389E-03	1189.	3.710E-03	3.591E-03
SSE	1422.	1422.	4.090E-04	3.959E-04	1422.	8.282E-04	8.017E-04	1422.	2.052E-03	1.986E-03
S	1198.	1198.	4.040E-04	3.910E-04	1198.	8.103E-04	7.843E-04	1198.	2.334E-03	2.259E-03
SSW	2140.	2140.	2.070E-04	2.004E-04	2140.	4.157E-04	4.024E-04	2140.	1.195E-03	1.157E-03
SW	1372.	1372.	3.864E-04	3.740E-04	1372.	9.192E-04	8.898E-04	1372.	3.318E-03	3.212E-03
WSW	823.	823.	6.504E-04	6.296E-04	823.	1.917E-03	1.856E-03	823.	7.433E-03	7.196E-03
W	713.	713.	8.303E-04	8.037E-04	713.	2.525E-03	2.445E-03	713.	1.179E-02	1.141E-02
WNW	713.	713.	7.474E-04	7.235E-04	713.	2.689E-03	2.603E-03	713.	1.583E-02	1.532E-02
NW	823.	823.	7.219E-04	6.988E-04	823.	2.157E-03	2.088E-03	823.	1.085E-02	1.050E-02
NNW	1481.	1481.	4.362E-04	4.222E-04	1481.	1.291E-03	1.249E-03	1481.	4.963E-03	4.805E-03

QUAD CITIES SITE METEOROLOGICAL DATA 1/78 - 12/87

Table F-7a

Maximum Offsite Finite Plume Gamma Dose Factors Based on 1 cm Depth at the Restricted Area Boundary for Kr-83m

Downwind Direction	Restricted Area Bound (meters)	Elevated(Stack) Release Radius (meters)	S (mrad/yr)/(uCi/sec)	SBAR	Mixed Mode(Vent) Release Radius (meters)	V (mrad/yr)/(uCi/sec)	VBAR	Ground Level Release Radius (meters)	G (mrad/yr)/(uCi/sec)	GBAR
N	219.	219.	6.431E-07	4.849E-07	219.	2.757E-04	2.079E-04	219.	3.034E-03	2.288E-03
NNE	224.	224.	7.975E-07	6.013E-07	224.	2.140E-04	1.613E-04	224.	2.773E-03	2.091E-03
NE	265.	265.	5.110E-07	3.853E-07	265.	1.165E-04	8.782E-05	265.	2.348E-03	1.770E-03
ENE	393.	393.	1.005E-06	7.578E-07	393.	6.930E-05	5.225E-05	393.	1.021E-03	7.696E-04
E	867.	867.	1.516E-06	1.143E-06	867.	3.734E-05	2.816E-05	867.	3.636E-04	2.742E-04
ESE	924.	924.	1.867E-06	1.408E-06	924.	3.596E-05	2.711E-05	924.	3.118E-04	2.351E-04
SE	1010.	1010.	1.308E-06	9.866E-07	1010.	2.064E-05	1.556E-05	1010.	1.640E-04	1.236E-04
SSE	1059.	1059.	8.754E-07	6.600E-07	1059.	1.272E-05	9.592E-06	1059.	1.089E-04	8.211E-05
S	762.	762.	4.368E-07	3.294E-07	762.	1.388E-05	1.046E-05	762.	1.725E-04	1.300E-04
SSW	335.	335.	3.150E-07	2.375E-07	335.	4.659E-05	3.513E-05	335.	7.271E-04	5.483E-04
SW	232.	232.	3.086E-07	2.327E-07	232.	1.135E-04	8.558E-05	232.	1.838E-03	1.386E-03
WSW	189.	189.	3.671E-07	2.768E-07	189.	1.991E-04	1.502E-04	189.	2.710E-03	2.043E-03
W	189.	189.	4.298E-07	3.241E-07	189.	2.498E-04	1.884E-04	189.	3.612E-03	2.723E-03
WNW	183.	183.	3.928E-07	2.962E-07	183.	3.557E-04	2.682E-04	183.	5.159E-03	3.890E-03
NW	210.	210.	4.184E-07	3.155E-07	210.	2.310E-04	1.742E-04	210.	3.537E-03	2.667E-03
NNW	224.	224.	4.846E-07	3.654E-07	224.	2.580E-04	1.945E-04	224.	3.330E-03	2.511E-03

QUAD CITIES SITE METEOROLOGICAL DATA 1/78 - 12/87

Note Based on Reference 1 of Section [illegible] and the [illegible] in Sections B 5 and B 6 of Appendix B.

Table F-7a (Continued)

Maximum Offsite Finite Plume Gamma Dose Factors Based on 1 cm Depth at the Restricted Area Boundary for Kr-85m

Downwind Direction	Restricted Area Bound (meters)	Elevated(Stack) Release Radius (meters)	S (mrad/yr)/(uCi/sec)	SBAR	Mixed Mode(Vent) Release Radius (meters)	V (mrad/yr)/(uCi/sec)	VBAR	Ground Level Release Radius (meters)	G (mrad/yr)/(uCi/sec)	GBAR
N	219.	219.	4.678E-04	4.528E-04	219.	2.202E-03	2.117E-03	219.	1.154E-02	1.100E-02
NNE	224.	224.	5.607E-04	5.427E-04	224.	2.271E-03	2.187E-03	224.	1.119E-02	1.068E-02
NE	265.	265.	3.522E-04	3.409E-04	265.	1.370E-03	1.320E-03	265.	9.701E-03	9.261E-03
ENE	393.	393.	1.843E-04	1.784E-04	393.	7.728E-04	7.443E-04	393.	4.697E-03	4.490E-03
E	867.	867.	1.074E-04	1.038E-04	867.	4.558E-04	4.391E-04	867.	2.075E-03	1.988E-03
ESE	924.	924.	1.327E-04	1.283E-04	924.	4.697E-04	4.527E-04	924.	1.831E-03	1.754E-03
SE	1010.	1010.	1.058E-04	1.023E-04	1010.	3.100E-04	2.990E-04	1010.	1.008E-03	9.667E-04
SSE	1059.	1059.	7.523E-05	7.278E-05	1059.	2.050E-04	1.977E-04	1059.	6.733E-04	6.454E-04
S	762.	762.	8.422E-05	8.150E-05	762.	2.332E-04	2.250E-04	762.	9.467E-04	9.066E-04
SSW	335.	335.	1.614E-04	1.562E-04	335.	5.473E-04	5.273E-04	335.	3.128E-03	2.987E-03
SW	232.	232.	2.814E-04	2.723E-04	232.	1.105E-03	1.064E-03	232.	7.183E-03	6.852E-03
WSW	189.	189.	3.592E-04	3.477E-04	189.	1.694E-03	1.629E-03	189.	1.012E-02	9.646E-03
W	189.	189.	4.016E-04	3.888E-04	189.	1.938E-03	1.863E-03	189.	1.299E-02	1.238E-02
WNW	183.	183.	3.732E-04	3.613E-04	183.	2.246E-03	2.155E-03	183.	1.797E-02	1.711E-02
NW	210.	210.	3.616E-04	3.500E-04	210.	1.766E-03	1.697E-03	210.	1.297E-02	1.236E-02
NNW	224.	224.	3.668E-04	3.551E-04	224.	1.932E-03	1.856E-03	224.	1.251E-02	1.192E-02

QUAD CITIES SITE METEOROLOGICAL DATA 1/78 - 12/87

Table F-7a (Continued)

Maximum Offsite Finite Plume Gamma Dose Factors Based on 1 cm Depth at the Restricted Area Boundary for Kr-85

Downwind Direction	Restricted Area Bound (meters)	Elevated(Stack) Release Radius (meters)	S (mrad/yr)/(uCi/sec)	SBAR	Mixed Mode(Vent) Release Radius (meters)	V (mrad/yr)/(uCi/sec)	VBAR	Ground Level Release Radius (meters)	G (mrad/yr)/(uCi/sec)	GBAR
N	219.	219.	6.596E-06	6.379E-06	219.	2.551E-05	2.467E-05	219.	1.241E-04	1.200E-04
NNE	224.	224.	7.986E-06	7.723E-06	224.	2.675E-05	2.587E-05	224.	1.201E-04	1.162E-04
NE	265.	265.	5.068E-06	4.900E-06	265.	1.637E-05	1.583E-05	265.	1.047E-04	1.012E-04
ENE	393.	393.	2.629E-06	2.542E-06	393.	9.149E-06	8.847E-06	393.	5.108E-05	4.939E-05
E	867.	867.	1.483E-06	1.434E-06	867.	5.373E-06	5.196E-06	867.	2.311E-05	2.235E-05
ESE	924.	924.	1.823E-06	1.763E-06	924.	5.557E-06	5.374E-06	924.	2.041E-05	1.973E-05
SE	1010.	1010.	1.464E-06	1.415E-06	1010.	3.696E-06	3.574E-06	1010.	1.134E-05	1.096E-05
SSE	1059.	1059.	1.050E-06	1.016E-06	1059.	2.466E-06	2.384E-06	1059.	7.598E-06	7.347E-06
S	762.	762.	1.194E-06	1.155E-06	762.	2.808E-06	2.715E-06	762.	1.056E-05	1.021E-05
SSW	335.	335.	2.320E-06	2.243E-06	335.	6.504E-06	6.290E-06	335.	3.389E-05	3.277E-05
SW	232.	232.	4.038E-06	3.905E-06	232.	1.301E-05	1.258E-05	232.	7.734E-05	7.479E-05
WSW	189.	189.	5.147E-06	4.977E-06	189.	1.978E-05	1.913E-05	189.	1.086E-04	1.050E-04
W	189.	189.	5.740E-06	5.551E-06	189.	2.251E-05	2.176E-05	189.	1.394E-04	1.348E-04
WNW	183.	183.	5.334E-06	5.158E-06	183.	2.578E-05	2.493E-05	183.	1.927E-04	1.864E-04
NW	210.	210.	5.158E-06	4.988E-06	210.	2.051E-05	1.983E-05	210.	1.396E-04	1.350E-04
NNW	224.	224.	5.197E-06	5.025E-06	224.	2.234E-05	2.160E-05	224.	1.347E-04	1.303E-04

QUAD CITIES SITE METEOROLOGICAL DATA 1/78 - 12/87

Table F-7a (Continued)

Maximum Offsite Finite Plume Gamma Dose Factors Based on 1 cm Depth at the Restricted Area Boundary for Kr-87

Downwind Direction	Restricted Area Bound (meters)	Elevated(Stack) Release Radius (meters)	S (mrad/yr)/(uCi/sec)	SBAR	Mixed Mode(Vent) Release Radius (meters)	V (mrad/yr)/(uCi/sec)	VBAR	Ground Level Release Radius (meters)	G (mrad/yr)/(uCi/sec)	GBAR
N	219.	219.	2.415E-03	2.346E-03	219.	7.757E-03	7.533E-03	219.	3.450E-02	3.350E-02
NNE	224.	224.	2.948E-03	2.864E-03	224.	8.289E-03	8.050E-03	224.	3.368E-02	3.270E-02
NE	265.	265.	1.888E-03	1.834E-03	265.	5.102E-03	4.955E-03	265.	2.884E-02	2.800E-02
ENE	393.	393.	9.666E-04	9.391E-04	393.	2.802E-03	2.721E-03	393.	1.382E-02	1.342E-02
E	867.	867.	5.225E-04	5.076E-04	867.	1.601E-03	1.555E-03	867.	5.968E-03	5.794E-03
ESE	924.	924.	6.370E-04	6.188E-04	924.	1.650E-03	1.603E-03	924.	5.283E-03	5.129E-03
SE	1010.	1010.	5.090E-04	4.945E-04	1010.	1.107E-03	1.075E-03	1010.	2.886E-03	2.802E-03
SSE	1059.	1059.	3.643E-04	3.539E-04	1059.	7.298E-04	7.088E-04	1059.	1.911E-03	1.856E-03
S	762.	762.	4.232E-04	4.112E-04	762.	8.482E-04	8.237E-04	762.	2.691E-03	2.613E-03
SSW	335.	335.	8.550E-04	8.307E-04	335.	2.001E-03	1.943E-03	335.	9.243E-03	8.974E-03
SW	232.	232.	1.501E-03	1.459E-03	232.	4.021E-03	3.905E-03	232.	2.143E-02	2.081E-02
WSW	189.	189.	1.909E-03	1.855E-03	189.	6.096E-03	5.920E-03	189.	3.040E-02	2.952E-02
W	189.	189.	2.129E-03	2.068E-03	189.	6.898E-03	6.699E-03	189.	3.912E-02	3.798E-02
WNW	183.	183.	1.976E-03	1.920E-03	183.	7.817E-03	7.592E-03	183.	5.420E-02	5.262E-02
NW	210.	210.	1.908E-03	1.853E-03	210.	6.257E-03	6.076E-03	210.	3.878E-02	3.765E-02
NNW	224.	224.	1.909E-03	1.855E-03	224.	6.787E-03	6.591E-03	224.	3.727E-02	3.619E-02

QUAD CITIES SITE METEOROLOGICAL DATA 1/78 - 12/87

Table F-7a (Continued)

Maximum Offsite Finite Plume Gamma Dose Factors Based on 1 cm Depth at the Restricted Area Boundary for Kr-88

Downwind Direction	Restricted Area Bound (meters)	Elevated(Stack) Release Radius (meters)	S (mrad/yr)/(uCi/sec)	SBAR (mrad/yr)/(uCi/sec)	Mixed Mode(Vent) Release Radius (meters)	V (mrad/yr)/(uCi/sec)	VBAR (mrad/yr)/(uCi/sec)	Ground Level Release Radius (meters)	G (mrad/yr)/(uCi/sec)	GBAR (mrad/yr)/(uCi/sec)
N	219.	219.	6.197E-03	6.033E-03	219.	1.878E-02	1.826E-02	219.	8.281E-02	8.036E-02
NNE	224.	224.	7.596E-03	7.395E-03	224.	2.013E-02	1.958E-02	224.	8.040E-02	7.803E-02
NE	265.	265.	4.891E-03	4.761E-03	265.	1.250E-02	1.215E-02	265.	6.946E-02	6.742E-02
ENE	393.	393.	2.512E-03	2.445E-03	393.	6.861E-03	6.673E-03	393.	3.360E-02	3.262E-02
E	867.	867.	1.354E-03	1.318E-03	867.	3.952E-03	3.844E-03	867.	1.491E-02	1.448E-02
ESE	924.	924.	1.646E-03	1.602E-03	924.	4.083E-03	3.971E-03	924.	1.318E-02	1.280E-02
SE	1010.	1010.	1.321E-03	1.286E-03	1010.	2.747E-03	2.672E-03	1010.	7.268E-03	7.061E-03
SSE	1059.	1059.	9.514E-04	9.262E-04	1059.	1.828E-03	1.779E-03	1059.	4.843E-03	4.705E-03
S	762.	762.	1.107E-03	1.078E-03	762.	2.109E-03	2.052E-03	762.	6.758E-03	6.563E-03
SSW	335.	335.	2.223E-03	2.164E-03	335.	4.901E-03	4.767E-03	335.	2.238E-02	2.172E-02
SW	232.	232.	3.884E-03	3.782E-03	232.	9.782E-03	9.512E-03	232.	5.149E-02	4.997E-02
WSW	189.	189.	4.927E-03	4.797E-03	189.	1.477E-02	1.436E-02	189.	7.270E-02	7.054E-02
W	189.	189.	5.494E-03	5.348E-03	189.	1.669E-02	1.622E-02	189.	9.350E-02	9.072E-02
WNW	183.	183.	5.096E-03	4.961E-03	183.	1.889E-02	1.836E-02	183.	1.295E-01	1.257E-01
NW	210.	210.	4.917E-03	4.787E-03	210.	1.517E-02	1.475E-02	210.	9.319E-02	9.042E-02
NNW	224.	224.	4.908E-03	4.778E-03	224.	1.644E-02	1.598E-02	224.	8.972E-02	8.706E-02

QUAD CITIES SITE METEOROLOGICAL DATA 1/78 - 12/87

Table F-7a (Continued)

Maximum Offsite Finite Plume Gamma Dose Factors Based on 1 cm Depth at the Restricted Area Boundary for Kr-89

Downwind Direction	Restricted Area Bound (meters)	Elevated(Stack) Release Radius (meters)	S (mrad/yr)/(uCi/sec)	SBAR	Mixed Mode(Vent) Release Radius (meters)	V (mrad/yr)/(uCi/sec)	VBAR	Ground Level Release Radius (meters)	G (mrad/yr)/(uCi/sec)	GBAR
N	219.	219.	4.468E-03	4.343E-03	219.	1.234E-02	1.199E-02	219.	3.852E-02	3.741E-02
NNE	224.	224.	5.294E-03	5.145E-03	224.	1.371E-02	1.332E-02	224.	4.217E-02	4.096E-02
NE	265.	265.	3.186E-03	3.096E-03	265.	7.526E-03	7.311E-03	265.	2.907E-02	2.824E-02
ENE	393.	393.	1.463E-03	1.421E-03	393.	3.687E-03	3.582E-03	393.	1.142E-02	1.109E-02
E	867.	867.	6.059E-04	5.888E-04	867.	1.457E-03	1.415E-03	867.	2.884E-03	2.801E-03
ESE	924.	924.	7.398E-04	7.189E-04	924.	1.526E-03	1.483E-03	924.	2.824E-03	2.743E-03
SE	1010.	1010.	5.412E-04	5.260E-04	1010.	9.216E-04	8.953E-04	1010.	1.409E-03	1.369E-03
SSE	1059.	1059.	3.421E-04	3.324E-04	1059.	5.267E-04	5.117E-04	1059.	8.474E-04	8.231E-04
S	762.	762.	4.708E-04	4.575E-04	762.	7.716E-04	7.496E-04	762.	1.441E-03	1.399E-03
SSW	335.	335.	1.328E-03	1.291E-03	335.	2.813E-03	2.733E-03	335.	8.950E-03	8.692E-03
SW	232.	232.	2.630E-03	2.556E-03	232.	6.447E-03	6.263E-03	232.	2.394E-02	2.325E-02
WSW	189.	189.	3.460E-03	3.362E-03	189.	1.036E-02	1.007E-02	189.	3.848E-02	3.737E-02
W	189.	189.	3.883E-03	3.773E-03	189.	1.158E-02	1.125E-02	189.	4.850E-02	4.710E-02
WNW	183.	183.	3.624E-03	3.523E-03	183.	1.268E-02	1.232E-02	183.	6.720E-02	6.527E-02
NW	210.	210.	3.446E-03	3.349E-03	210.	9.860E-03	9.578E-03	210.	4.213E-02	4.092E-02
NNW	224.	224.	3.469E-03	3.371E-03	224.	1.052E-02	1.022E-02	224.	3.886E-02	3.775E-02

QUAD CITIES SITE METEOROLOGICAL DATA 1/78 - 12/87

Table F-7a (Continued)

Maximum Offsite Finite Plume Gamma Dose Factors Based on 1 cm Depth at the Restricted Area Boundary for Kr-90

Downwind Direction	Restricted Area Bound (meters)	Elevated(Stack) Release Radius (meters)	S (mrad/yr)/(uCi/sec)	SBAR	Mixed Mode(Vent) Release Radius (meters)	V (mrad/yr)/(uCi/sec)	VBAR	Ground Level Release Radius (meters)	G (mrad/yr)/(uCi/sec)	GBAR
N	219.	219.	2.813E-03	2.730E-03	219.	5.516E-03	5.351E-03	219.	8.230E-03	7.977E-03
NNE	224.	224.	2.979E-03	2.892E-03	224.	5.985E-03	5.807E-03	224.	1.051E-02	1.019E-02
NE	265.	265.	1.390E-03	1.349E-03	265.	2.265E-03	2.197E-03	265.	4.467E-03	4.330E-03
ENE	393.	393.	4.894E-04	4.751E-04	393.	8.252E-04	8.005E-04	393.	1.128E-03	1.094E-03
E	867.	867.	8.398E-05	8.151E-05	867.	1.075E-04	1.043E-04	867.	7.851E-05	7.612E-05
ESE	924.	924.	9.702E-05	9.416E-05	924.	1.066E-04	1.034E-04	924.	9.321E-05	9.038E-05
SE	1010.	1010.	5.060E-05	4.911E-05	1010.	4.494E-05	4.360E-05	1010.	3.214E-05	3.117E-05
SSE	1059.	1059.	2.124E-05	2.061E-05	1059.	1.841E-05	1.786E-05	1059.	1.452E-05	1.408E-05
S	762.	762.	5.625E-05	5.460E-05	762.	5.725E-05	5.555E-05	762.	6.452E-05	6.256E-05
SSW	335.	335.	4.803E-04	4.663E-04	335.	7.966E-04	7.728E-04	335.	1.528E-03	1.481E-03
SW	232.	232.	1.374E-03	1.334E-03	232.	2.739E-03	2.657E-03	232.	5.711E-03	5.536E-03
WSW	189.	189.	2.114E-03	2.052E-03	189.	5.336E-03	5.177E-03	189.	1.282E-02	1.242E-02
W	189.	189.	2.413E-03	2.342E-03	189.	5.761E-03	5.589E-03	189.	1.337E-02	1.296E-02
WNW	183.	183.	2.295E-03	2.228E-03	183.	5.876E-03	5.700E-03	183.	1.633E-02	1.582E-02
NW	210.	210.	2.006E-03	1.948E-03	210.	4.131E-03	4.008E-03	210.	8.487E-03	8.226E-03
NNW	224.	224.	2.057E-03	1.997E-03	224.	4.283E-03	4.155E-03	224.	7.350E-03	7.124E-03

QUAD CITIES SITE METEOROLOGICAL DATA 1/78 - 12/87

Table F-7a (Continued)

Maximum Offsite Finite Plume Gamma Dose Factors Based on 1 cm Depth at the Restricted Area Boundary for Xe-131m

Downwind Direction	Restricted Area Bound (meters)	Elevated(Stack) Release Radius (meters)	S (mrad/yr)/(uCi/sec)	SBAR	Mixed Mode(Vent) Release Radius (meters)	V (mrad/yr)/(uCi/sec)	VBAR	Ground Level Release Radius (meters)	G (mrad/yr)/(uCi/sec)	GBAR
N	219.	219.	1.042E-05	9.981E-06	219.	2.625E-04	2.076E-04	219.	2.654E-03	2.051E-03
NNE	224.	224.	1.252E-05	1.198E-05	224.	2.145E-04	1.718E-04	224.	2.425E-03	1.876E-03
NE	265.	265.	7.875E-06	7.538E-06	265.	1.202E-04	9.671E-05	265.	2.083E-03	1.612E-03
ENE	393.	393.	4.703E-06	4.384E-06	393.	7.093E-05	5.693E-05	393.	9.278E-04	7.200E-04
E	867.	867.	3.490E-06	3.120E-06	867.	3.954E-05	3.186E-05	867.	3.518E-04	2.746E-04
ESE	924.	924.	4.296E-06	3.843E-06	924.	3.871E-05	3.131E-05	924.	3.029E-04	2.366E-04
SE	1010.	1010.	3.290E-06	2.964E-06	1010.	2.310E-05	1.881E-05	1010.	1.626E-04	1.271E-04
SSE	1059.	1059.	2.305E-06	2.082E-06	1059.	1.463E-05	1.196E-05	1059.	1.091E-04	8.534E-05
S	762.	762.	2.145E-06	2.003E-06	762.	1.607E-05	1.317E-05	762.	1.675E-04	1.305E-04
SSW	335.	335.	3.679E-06	3.508E-06	335.	4.813E-05	3.873E-05	335.	6.527E-04	5.056E-04
SW	232.	232.	6.212E-06	5.962E-06	232.	1.120E-04	8.931E-05	232.	1.615E-03	1.248E-03
WSW	189.	189.	7.908E-06	7.594E-06	189.	1.908E-04	1.513E-04	189.	2.355E-03	1.819E-03
W	189.	189.	8.855E-06	8.500E-06	189.	2.355E-04	1.861E-04	189.	3.123E-03	2.410E-03
WNW	183.	183.	8.223E-06	7.895E-06	183.	3.251E-04	2.549E-04	183.	4.444E-03	3.427E-03
NW	210.	210.	7.998E-06	7.672E-06	210.	2.181E-04	1.722E-04	210.	3.085E-03	2.381E-03
NNW	224.	224.	8.159E-06	7.817E-06	224.	2.429E-04	1.916E-04	224.	2.919E-03	2.255E-03

QUAD CITIES SITE METEOROLOGICAL DATA 1/78 - 12/87

Table F-7a (Continued)

Maximum Offsite Finite Plume Gamma Dose Factors Based on 1 cm Depth at the Restricted Area Boundary for Xe-133m

Downwind Direction	Restricted Area Bound (meters)	Elevated(Stack) Release Radius (meters)	S (mrad/yr)/(uCi/sec)	SBAR (mrad/yr)/(uCi/sec)	Mixed Mode(Vent) Release Radius (meters)	V (mrad/yr)/(uCi/sec)	VBAR (mrad/yr)/(uCi/sec)	Ground Level Release Radius (meters)	G (mrad/yr)/(uCi/sec)	GBAR (mrad/yr)/(uCi/sec)
N	219.	219.	6.658E-05	6.434E-05	219.	5.277E-04	4.625E-04	219.	4.053E-03	3.384E-03
NNE	224.	224.	7.985E-05	7.715E-05	224.	4.877E-04	4.348E-04	224.	3.778E-03	3.168E-03
NE	265.	265.	5.019E-05	4.850E-05	265.	2.852E-04	2.557E-04	265.	3.261E-03	2.737E-03
ENE	393.	393.	2.690E-05	2.586E-05	393.	1.642E-04	1.467E-04	393.	1.501E-03	1.268E-03
E	867.	867.	1.646E-05	1.566E-05	867.	9.481E-05	8.511E-05	867.	6.083E-04	5.203E-04
ESE	924.	924.	2.032E-05	1.934E-05	924.	9.575E-05	8.628E-05	924.	5.291E-04	4.534E-04
SE	1010.	1010.	1.609E-05	1.534E-05	1010.	6.073E-05	5.510E-05	1010.	2.878E-04	2.472E-04
SSE	1059.	1059.	1.143E-05	1.091E-05	1059.	3.962E-05	3.606E-05	1059.	1.930E-04	1.658E-04
S	762.	762.	1.234E-05	1.187E-05	762.	4.437E-05	4.047E-05	762.	2.848E-04	2.429E-04
SSW	335.	335.	2.311E-05	2.231E-05	335.	1.142E-04	1.023E-04	335.	1.033E-03	8.694E-04
SW	232.	232.	4.001E-05	3.868E-05	232.	2.450E-04	2.173E-04	232.	2.486E-03	2.079E-03
WSW	189.	189.	5.105E-05	4.935E-05	189.	3.945E-04	3.472E-04	189.	3.580E-03	2.986E-03
W	189.	189.	5.708E-05	5.518E-05	189.	4.687E-04	4.101E-04	189.	4.695E-03	3.908E-03
WNW	183.	183.	5.304E-05	5.127E-05	183.	5.955E-04	5.143E-04	183.	6.617E-03	5.496E-03
NW	210.	210.	5.142E-05	4.970E-05	210.	4.308E-04	3.766E-04	210.	4.658E-03	3.881E-03
NNW	224.	224.	5.221E-05	5.045E-05	224.	4.756E-04	4.152E-04	224.	4.437E-03	3.701E-03

QUAD CITIES SITE METEOROLOGICAL DATA 1/78 - 12/87

Table F-7a (Continued)

Maximum Offsite Finite Plume Gamma Dose Factors Based on 1 cm Depth at the Restricted Area Boundary for Xe-133

Downwind Direction	Restricted Area Bound (meters)	Elevated(Stack) Release Radius (meters)	S (mrad/yr)/(uCi/sec)	SBAR (mrad/yr)/(uCi/sec)	Mixed Mode(Vent) Release Radius (meters)	V (mrad/yr)/(uCi/sec)	VBAR (mrad/yr)/(uCi/sec)	Ground Level Release Radius (meters)	G (mrad/yr)/(uCi/sec)	GBAR (mrad/yr)/(uCi/sec)
N	219.	219.	5.703E-05	5.546E-05	219.	5.688E-04	5.135E-04	219.	4.269E-03	3.706E-03
NNE	224.	224.	6.743E-05	6.556E-05	224.	5.298E-04	4.848E-04	224.	4.024E-03	3.509E-03
NE	265.	265.	4.182E-05	4.065E-05	265.	3.080E-04	2.829E-04	265.	3.486E-03	3.043E-03
ENE	393.	393.	2.317E-05	2.242E-05	393.	1.799E-04	1.650E-04	393.	1.631E-03	1.433E-03
E	867.	867.	1.536E-05	1.473E-05	867.	1.062E-04	9.783E-05	867.	6.789E-04	6.037E-04
ESE	924.	924.	1.920E-05	1.843E-05	924.	1.074E-04	9.924E-05	924.	5.924E-04	5.276E-04
SE	1010.	1010.	1.509E-05	1.451E-05	1010.	6.799E-05	6.313E-05	1010.	3.236E-04	2.888E-04
SSE	1059.	1059.	1.062E-05	1.022E-05	1059.	4.413E-05	4.107E-05	1059.	2.169E-04	1.936E-04
S	762.	762.	1.084E-05	1.050E-05	762.	4.943E-05	4.607E-05	762.	3.163E-04	2.805E-04
SSW	335.	335.	1.936E-05	1.881E-05	335.	1.245E-04	1.144E-04	335.	1.111E-03	9.723E-04
SW	232.	232.	3.329E-05	3.238E-05	232.	2.642E-04	2.407E-04	232.	2.632E-03	2.289E-03
WSW	189.	189.	4.249E-05	4.133E-05	189.	4.234E-04	3.833E-04	189.	3.761E-03	3.261E-03
W	189.	189.	4.774E-05	4.643E-05	189.	5.008E-04	4.512E-04	189.	4.897E-03	4.235E-03
WNW	183.	183.	4.433E-05	4.312E-05	183.	6.291E-04	5.606E-04	183.	6.857E-03	5.916E-03
NW	210.	210.	4.319E-05	4.201E-05	210.	4.604E-04	4.145E-04	210.	4.873E-03	4.219E-03
NNW	224.	224.	4.440E-05	4.318E-05	224.	5.100E-04	4.588E-04	224.	4.661E-03	4.042E-03

QUAD CITIES SITE METEOROLOGICAL DATA 1/78 - 12/87

Table F-7a (Continued)

Maximum Offsite Finite Plume Gamma Dose Factors Based on 1 cm Depth at the Restricted Area Boundary for Xe-135m

Downwind Direction	Restricted Area Bound (meters)	Elevated(Stack) Release Radius (meters)	S (mrad/yr)/(uCi/sec)	SBAR	Mixed Mode(Vent) Release Radius (meters)	V (mrad/yr)/(uCi/sec)	VBAR	Ground Level Release Radius (meters)	G (mrad/yr)/(uCi/sec)	GBAR
N	219.	219.	1.214E-03	1.174E-03	219.	4.549E-03	4.389E-03	219.	2.009E-02	1.932E-02
NNE	224.	224.	1.459E-03	1.410E-03	224.	4.840E-03	4.672E-03	224.	2.021E-02	1.944E-02
NE	265.	265.	9.144E-04	8.842E-04	265.	2.869E-03	2.770E-03	265.	1.633E-02	1.571E-02
ENE	393.	393.	4.590E-04	4.438E-04	393.	1.556E-03	1.502E-03	393.	7.406E-03	7.129E-03
E	867.	867.	2.433E-04	2.352E-04	867.	8.314E-04	8.027E-04	867.	2.784E-03	2.682E-03
ESE	924.	924.	2.992E-04	2.893E-04	924.	8.543E-04	8.249E-04	924.	2.504E-03	2.412E-03
SE	1010.	1010.	2.344E-04	2.267E-04	1010.	5.597E-04	5.405E-04	1010.	1.326E-03	1.278E-03
SSE	1059.	1059.	1.624E-04	1.570E-04	1059.	3.536E-04	3.415E-04	1059.	8.534E-04	8.225E-04
S	762.	762.	1.912E-04	1.849E-04	762.	4.304E-04	4.157E-04	762.	1.244E-03	1.199E-03
SSW	335.	335.	4.057E-04	3.923E-04	335.	1.118E-03	1.079E-03	335.	5.101E-03	4.910E-03
SW	232.	232.	7.328E-04	7.086E-04	232.	2.329E-03	2.248E-03	232.	1.240E-02	1.193E-02
WSW	189.	189.	9.402E-04	9.092E-04	189.	3.601E-03	3.475E-03	189.	1.817E-02	1.748E-02
W	189.	189.	1.051E-03	1.016E-03	189.	4.093E-03	3.948E-03	189.	2.348E-02	2.258E-02
WNW	183.	183.	9.772E-04	9.450E-04	183.	4.652E-03	4.485E-03	183.	3.266E-02	3.140E-02
NW	210.	210.	9.436E-04	9.124E-04	210.	3.659E-03	3.530E-03	210.	2.248E-02	2.162E-02
NNW	224.	224.	9.519E-04	9.205E-04	224.	3.971E-03	3.830E-03	224.	2.134E-02	2.052E-02

QUAD CITIES SITE METEOROLOGICAL DATA 1/78 - 12/87

Table F-7a (Continued)

Maximum Offsite Finite Plume Gamma Dose Factors Based on 1 cm Depth at the Restricted Area Boundary for Xe-135

Downwind Direction	Restricted Area Bound (meters)	Elevated(Stack) Release Radius (meters)	S (mrad/yr)/(uCi/sec)	SBAR	Mixed Mode(Vent) Release Radius (meters)	V (mrad/yr)/(uCi/sec)	VBAR	Ground Level Release Radius (meters)	G (mrad/yr)/(uCi/sec)	GBAR
N	219.	219.	6.602E-04	6.390E-04	219.	2.996E-03	2.896E-03	219.	1.525E-02	1.471E-02
NNE	224.	224.	7.921E-04	7.667E-04	224.	3.110E-03	3.007E-03	224.	1.481E-02	1.429E-02
NE	265.	265.	4.981E-04	4.821E-04	265.	1.883E-03	1.820E-03	265.	1.289E-02	1.244E-02
ENE	393.	393.	2.606E-04	2.522E-04	393.	1.061E-03	1.026E-03	393.	6.287E-03	6.069E-03
E	867.	867.	1.513E-04	1.465E-04	867.	6.281E-04	6.074E-04	867.	2.823E-03	2.727E-03
ESE	924.	924.	1.870E-04	1.809E-04	924.	6.486E-04	6.272E-04	924.	2.493E-03	2.408E-03
SE	1010.	1010.	1.493E-04	1.445E-04	1010.	4.291E-04	4.150E-04	1010.	1.379E-03	1.332E-03
SSE	1059.	1059.	1.064E-04	1.030E-04	1059.	2.847E-04	2.753E-04	1059.	9.226E-04	8.912E-04
S	762.	762.	1.193E-04	1.155E-04	762.	3.233E-04	3.128E-04	762.	1.288E-03	1.244E-03
SSW	335.	335.	2.284E-04	2.211E-04	335.	7.523E-04	7.275E-04	335.	4.170E-03	4.025E-03
SW	232.	232.	3.978E-04	3.850E-04	232.	1.511E-03	1.461E-03	232.	9.511E-03	9.177E-03
WSW	189.	189.	5.078E-04	4.915E-04	189.	2.308E-03	2.231E-03	189.	1.335E-02	1.288E-02
W	189.	189.	5.676E-04	5.493E-04	189.	2.634E-03	2.546E-03	189.	1.710E-02	1.650E-02
WNW	183.	183.	5.274E-04	5.105E-04	183.	3.034E-03	2.931E-03	183.	2.361E-02	2.277E-02
NW	210.	210.	5.110E-04	4.946E-04	210.	2.401E-03	2.320E-03	210.	1.712E-02	1.651E-02
NNW	224.	224.	5.180E-04	5.014E-04	224.	2.624E-03	2.536E-03	224.	1.653E-02	1.595E-02

QUAD CITIES SITE METEOROLOGICAL DATA 1/78 - 12/87

Table F-7a (Continued)

Maximum Offsite Finite Plume Gamma Dose Factors Based on 1 cm Depth at the Restricted Area Boundary for Xe-137

Downwind Direction	Restricted Area Bound (meters)	Elevated(Stack) Release Radius (meters)	S (mrad/yr)/(uCi/sec)	SBAR	Mixed Mode(Vent) Release Radius (meters)	V (mrad/yr)/(uCi/sec)	VBAR	Ground Level Release Radius (meters)	G (mrad/yr)/(uCi/sec)	GBAR
N	219.	219.	5.305E-04	5.135E-04	219.	1.716E-03	1.661E-03	219.	5.932E-03	5.740E-03
NNE	224.	224.	6.272E-04	6.071E-04	224.	1.882E-03	1.821E-03	224.	6.409E-03	6.201E-03
NE	265.	265.	3.789E-04	3.668E-04	265.	1.042E-03	1.009E-03	265.	4.545E-03	4.397E-03
ENE	393.	393.	1.781E-04	1.724E-04	393.	5.246E-04	5.077E-04	393.	1.836E-03	1.776E-03
E	867.	867.	7.904E-05	7.651E-05	867.	2.211E-04	2.140E-04	867.	4.987E-04	4.825E-04
ESE	924.	924.	9.700E-05	9.389E-05	924.	2.310E-04	2.235E-04	924.	4.794E-04	4.638E-04
SE	1010.	1010.	7.200E-05	6.970E-05	1010.	1.412E-04	1.367E-04	1010.	2.422E-04	2.343E-04
SSE	1059.	1059.	4.623E-05	4.475E-05	1059.	8.205E-05	7.941E-05	1059.	1.473E-04	1.425E-04
S	762.	762.	6.100E-05	5.905E-05	762.	1.156E-04	1.119E-04	762.	2.425E-04	2.347E-04
SSW	335.	335.	1.602E-04	1.551E-04	335.	3.946E-04	3.819E-04	335.	1.398E-03	1.353E-03
SW	232.	232.	3.111E-04	3.011E-04	232.	8.877E-04	8.591E-04	232.	3.675E-03	3.556E-03
WSW	189.	189.	4.072E-04	3.942E-04	189.	1.420E-03	1.375E-03	189.	5.804E-03	5.616E-03
W	189.	189.	4.573E-04	4.427E-04	189.	1.597E-03	1.545E-03	189.	7.377E-03	7.137E-03
WNW	183.	183.	4.265E-04	4.128E-04	183.	1.768E-03	1.710E-03	183.	1.024E-02	9.911E-03
NW	210.	210.	4.075E-04	3.944E-04	210.	1.371E-03	1.327E-03	210.	6.515E-03	6.303E-03
NNW	224.	224.	4.118E-04	3.986E-04	224.	1.471E-03	1.423E-03	224.	6.038E-03	5.842E-03

QUAD CITIES SITE METEOROLOGICAL DATA 1/78 - 12/87

Table F-7a (Continued)

Maximum Offsite Finite Plume Gamma Dose Factors Based on 1 cm Depth at the Restricted Area Boundary for Xe-138

Downwind Direction	Restricted Area Bound (meters)	Elevated(Stack) Release Radius (meters)	S (mrad/yr)/(uCi/sec)	SBAR	Mixed Mode(Vent) Release Radius (meters)	V (mrad/yr)/(uCi/sec)	VBAR	Ground Level Release Radius (meters)	G (mrad/yr)/(uCi/sec)	GBAR
N	219.	219.	3.270E-03	3.178E-03	219.	1.021E-02	9.910E-03	219.	4.159E-02	4.035E-02
NNE	224.	224.	3.963E-03	3.852E-03	224.	1.104E-02	1.072E-02	224.	4.199E-02	4.074E-02
NE	265.	265.	2.510E-03	2.439E-03	265.	6.608E-03	6.418E-03	265.	3.378E-02	3.277E-02
ENE	393.	393.	1.248E-03	1.213E-03	393.	3.539E-03	3.438E-03	393.	1.530E-02	1.484E-02
E	867.	867.	6.389E-04	6.209E-04	867.	1.867E-03	1.813E-03	867.	5.743E-03	5.574E-03
ESE	924.	924.	7.796E-04	7.576E-04	924.	1.919E-03	1.863E-03	924.	5.180E-03	5.028E-03
SE	1010.	1010.	6.106E-04	5.934E-04	1010.	1.265E-03	1.229E-03	1010.	2.748E-03	2.667E-03
SSE	1059.	1059.	4.239E-04	4.119E-04	1059.	7.997E-04	7.767E-04	1059.	1.765E-03	1.713E-03
S	762.	762.	5.089E-04	4.946E-04	762.	9.819E-04	9.538E-04	762.	2.564E-03	2.489E-03
SSW	335.	335.	1.106E-03	1.075E-03	335.	2.550E-03	2.477E-03	335.	1.055E-02	1.024E-02
SW	232.	232.	2.005E-03	1.949E-03	232.	5.305E-03	5.152E-03	232.	2.566E-02	2.490E-02
WSW	189.	189.	2.567E-03	2.494E-03	189.	8.156E-03	7.920E-03	189.	3.770E-02	3.657E-02
W	189.	189.	2.866E-03	2.785E-03	189.	9.217E-03	8.950E-03	189.	4.871E-02	4.725E-02
WNW	183.	183.	2.663E-03	2.589E-03	183.	1.037E-02	1.007E-02	183.	6.775E-02	6.573E-02
NW	210.	210.	2.568E-03	2.495E-03	210.	8.229E-03	7.991E-03	210.	4.651E-02	4.512E-02
NNW	224.	224.	2.574E-03	2.501E-03	224.	8.896E-03	8.638E-03	224.	4.411E-02	4.279E-02

QUAD CITIES SITE METEOROLOGICAL DATA 1/78 - 12/87

Table F-7a (Continued)

Maximum Offsite Finite Plume Gamma Dose Factors Based on 1 cm Depth at the Restricted Area Boundary for Ar-41

Downwind Direction	Restricted Area Bound (meters)	Elevated(Stack) Release Radius (meters)	S (mrad/yr)/(uCi/sec)	SBAR	Mixed Mode(Vent) Release Radius (meters)	V (mrad/yr)/(uCi/sec)	VBAR	Ground Level Release Radius (meters)	G (mrad/yr)/(uCi/sec)	GBAR
N	219.	219.	3.559E-03	3.445E-03	219.	1.194E-02	1.156E-02	219.	5.457E-02	5.282E-02
NNE	224.	224.	4.337E-03	4.198E-03	224.	1.270E-02	1.229E-02	224.	5.307E-02	5.137E-02
NE	265.	265.	2.774E-03	2.685E-03	265.	7.812E-03	7.562E-03	265.	4.566E-02	4.420E-02
ENE	393.	393.	1.426E-03	1.380E-03	393.	4.305E-03	4.167E-03	393.	2.197E-02	2.126E-02
E	867.	867.	7.769E-04	7.520E-04	867.	2.478E-03	2.398E-03	867.	9.588E-03	9.281E-03
ESE	924.	924.	9.478E-04	9.174E-04	924.	2.556E-03	2.474E-03	924.	8.477E-03	8.205E-03
SE	1010.	1010.	7.575E-04	7.332E-04	1010.	1.712E-03	1.657E-03	1010.	4.649E-03	4.500E-03
SSE	1059.	1059.	5.428E-04	5.255E-04	1059.	1.134E-03	1.097E-03	1059.	3.089E-03	2.990E-03
S	762.	762.	6.285E-04	6.083E-04	762.	1.309E-03	1.268E-03	762.	4.341E-03	4.202E-03
SSW	335.	335.	1.260E-03	1.219E-03	335.	3.072E-03	2.974E-03	335.	1.467E-02	1.420E-02
SW	232.	232.	2.206E-03	2.136E-03	232.	6.168E-03	5.971E-03	232.	3.391E-02	3.282E-02
WSW	189.	189.	2.808E-03	2.718E-03	189.	9.356E-03	9.056E-03	189.	4.800E-02	4.646E-02
W	189.	189.	3.129E-03	3.029E-03	189.	1.060E-02	1.026E-02	189.	6.176E-02	5.979E-02
WNW	183.	183.	2.907E-03	2.814E-03	183.	1.206E-02	1.167E-02	183.	8.559E-02	8.285E-02
NW	210.	210.	2.806E-03	2.716E-03	210.	9.630E-03	9.321E-03	210.	6.140E-02	5.944E-02
NNW	224.	224.	2.812E-03	2.722E-03	224.	1.045E-02	1.012E-02	224.	5.906E-02	5.717E-02

QUAD CITIES SITE METEOROLOGICAL DATA 1/78 - 12/87

Table F-8
Parameters for Calculations of N-16 Skyshine Radiation From Quad Cities

Location Number k	Activity	Occupancy Hours OH_k[a]	Occupancy Factor OF_k	Shielding Factor SF_k	Distance R_k (m)
1	Living at home (nearest resident)	8616	0.9836	0.7	800[b]
2	Fishing	36	0.00410	1.0	233[c]
3	Fishing	51	0.00586	1.0	344[c]
4	Fishing	31	0.00351	1.0	361[c]
5	Fishing	26	0.00293	1.0	680[c]

M_h = 5[e]
K = 3.80E-05 mrem/(MWe-hr)

These parameters are used to obtain an initial estimate of skyshine dose to the maximally exposed member of the public using Equation A-34 in Appendix A. If desired, more realistic parameters could be used in place of these to refine the estimate. For example, one could determine whether the nearest resident really fishes the specified number of hours at the specified location.

[a] The amount of time in a year that a maximally exposed fisherman would spend fishing near the site is estimated as 12 hours per week for 8 months per year. This yields an estimate of:

[12 hours/week] [(8 months/yr)/(12 months/yr)] x [52 weeks/yr] = 416 hours/yr

The remaining time is assumed to be spent at the nearest residence.

[b] Distance to nearest residence (See Table F-3).

[c] Estimated from drawings of the site.

[d] The OF_k is the quotient of the number of hours a location is occupied and the number of hours in a year. Thus OH_k/8760 hours = OF_k rounded to the 0.01 digit.

[e] Multiplication factor for hydrogen addition. Refer to equation A-34 of Appendix A.

Supplemental Table A

Elevated Level Joint Frequency Distribution Table Summary

296 Foot Elevation Data

Summary Table of Percent by Direction and Class

Class	N	NNE	NE	ENE	E	ESE	SE	SSE	S	SSW	SW	WSW	W	WNW	NW	NNW	Total
A	.076	.064	.045	.031	.086	.064	.164	.192	.236	.574	.211	.229	.457	.571	.360	.179	3.541
B	.060	.075	.073	.060	.050	.064	.129	.189	.249	.385	.183	.199	.273	.324	.218	.158	2.690
C	.147	.136	.185	.155	.151	.151	.168	.343	.391	.529	.312	.281	.478	.658	.440	.309	4.832
D	2.472	2.105	2.729	2.803	2.669	2.152	2.062	2.103	2.755	3.314	2.630	2.527	3.654	5.503	4.501	3.027	47.006
E	1.175	1.004	1.363	1.533	1.992	1.651	1.775	2.131	3.111	3.193	2.229	1.520	1.773	1.916	1.871	1.219	29.457
F	.287	.267	.324	.324	.601	.815	.936	.979	1.128	1.010	.593	.365	.352	.469	.397	.353	9.200
G	.042	.069	.060	.083	.117	.168	.400	.517	.574	.482	.294	.136	.111	.097	.076	.045	3.273
Total	4.260	3.720	4.778	4.989	5.666	5.066	5.634	6.454	8.445	9.487	6.453	5.258	7.097	9.538	7.864	5.291	100.000

Summary Table of Percent by Direction and Speed

Speed	N	NNE	NE	ENE	E	ESE	SE	SSE	S	SSW	SW	WSW	W	WNW	NW	NNW	Total
.45	.008	.009	.010	.005	.013	.007	.005	.002	.004	.005	.000	.006	.001	.000	.003	.005	.082
1.05	.021	.025	.025	.035	.029	.023	.029	.026	.022	.032	.038	.038	.041	.038	.031	.031	.485
2.05	.182	.182	.196	.192	.218	.199	.220	.190	.208	.325	.397	.299	.221	.239	.193	.188	3.650
3.05	.428	.366	.451	.407	.441	.406	.453	.384	.434	.787	.752	.473	.478	.500	.481	.393	7.632
4.05	.552	.561	.627	.643	.624	.596	.598	.608	.643	1.136	.897	.589	.563	.636	.680	.681	10.634
5.05	.684	.649	.752	.722	.803	.664	.756	.759	.831	1.264	1.130	.674	.692	.885	.977	.801	13.043
6.05	.712	.602	.725	.749	.939	.712	.913	.967	1.229	1.448	1.130	.812	.948	1.248	1.199	1.029	15.361
8.05	1.143	.796	1.190	1.247	1.481	1.515	1.714	2.013	2.538	2.516	1.459	1.341	2.022	2.883	2.324	1.494	27.676
10.05	.363	.314	.548	.611	.653	.671	.793	.979	1.544	1.250	.464	.588	1.254	1.804	1.347	.514	13.697
13.05	.149	.173	.218	.324	.375	.245	.141	.440	.866	.596	.144	.321	.653	1.078	.568	.136	6.428
18.00	.016	.042	.035	.054	.086	.028	.013	.084	.123	.125	.042	.116	.212	.218	.062	.019	1.276
99.00	.001	.001	.000	.000	.001	.000	.000	.001	.003	.004	.000	.003	.012	.009	.000	.000	.037
Total	4.260	3.720	4.778	4.989	5.666	5.066	5.634	6.454	8.445	9.487	6.453	5.258	7.097	9.538	7.864	5.291	100.000

NOTE: Wind directions in tables are presented in "wind from" and not "wind to" direction.

Supplemental Table A -Continued

Elevated Level Joint Frequency Distribution Table Summary

296 Foot Elevation Data

Summary Table of Percent by Speed and Class

Class Speed	A	B	C	D	E	F	G
.45	.000	.006	.003	.016	.031	.019	.007
1.05	.003	.006	.006	.158	.170	.089	.053
2.05	.066	.045	.119	1.692	1.012	.478	.237
3.05	.176	.185	.308	3.840	1.925	.777	.422
4.05	.289	.299	.522	5.012	2.924	1.105	.484
5.05	.369	.362	.716	5.799	3.931	1.367	.498
6.05	.571	.400	.736	6.691	4.835	1.596	.532
8.05	.998	.718	1.272	12.230	8.759	2.859	.841
10.05	.588	.391	.661	7.034	4.032	.804	.186
13.05	.391	.214	.385	3.767	1.557	.100	.013
18.00	.085	.056	.101	.753	.274	.007	.000
99.00	.006	.009	.004	.012	.006	.000	.000

Supplemental Table B

Mixed Mode Joint Frequency Distribution Table Summaries

196 Foot Elevation Data

Summary Table of Percent by Direction and Class

Class	N	NNE	NE	ENE	E	ESE	SE	SSE	S	SSW	SW	WSW	W	WNW	NW	NNW	Total
A	.158	.151	.168	.127	.107	.161	.192	.324	.365	.741	.187	.212	.416	.453	.539	.252	4.552
B	.049	.044	.070	.046	.043	.087	.073	.068	.100	.212	.080	.060	.117	.177	.156	.078	1.459
C	.130	.135	.172	.194	.185	.164	.170	.211	.283	.494	.269	.242	.395	.421	.350	.247	4.063
D	1.397	1.290	1.866	2.073	1.889	1.508	1.388	1.441	1.735	2.308	1.967	1.899	2.881	3.767	2.712	1.908	32.028
E	1.025	.905	1.323	1.778	2.029	1.551	1.643	1.947	2.558	3.048	2.280	1.841	2.437	2.656	2.102	1.157	30.281
F	.342	.319	.433	.501	.726	.863	.776	.936	1.291	1.051	.506	.337	.415	.475	.374	.311	9.655
G	.125	.127	.167	.203	.380	.598	.843	.980	.955	.767	.306	.174	.203	.148	.102	.118	6.196
Total	3.225	2.970	4.200	4.922	5.359	4.932	5.086	5.907	7.287	8.620	5.596	4.765	6.865	8.097	6.334	4.071	88.234

Summary Table of Percent by Direction and Speed

Speed	N	NNE	NE	ENE	E	ESE	SE	SSE	S	SSW	SW	WSW	W	WNW	NW	NNW	Total
.45	.006	.015	.006	.006	.006	.006	.008	.010	.012	.008	.018	.009	.002	.015	.000	.006	.131
1.05	.046	.035	.064	.050	.048	.062	.058	.079	.060	.075	.097	.064	.054	.064	.052	.050	.959
2.05	.305	.265	.255	.356	.348	.342	.367	.391	.385	.621	.719	.499	.445	.383	.362	.331	6.372
3.05	.520	.477	.702	.680	.787	.767	.699	.711	.744	1.289	1.295	.769	.790	.792	.810	.607	12.440
4.05	.761	.665	.769	.981	.975	.886	1.081	1.172	1.228	1.725	1.389	1.000	1.217	1.191	1.132	.809	16.983
5.05	.607	.611	.848	.963	1.069	1.014	1.116	1.138	1.376	1.673	.991	.912	1.308	1.603	1.240	.796	17.265
6.05	.426	.372	.645	.684	.801	.760	.850	.899	1.266	1.303	.563	.631	1.099	1.435	1.024	.656	13.415
8.05	.412	.399	.650	.832	.821	.782	.721	.953	1.406	1.337	.453	.603	1.272	1.745	1.208	.643	14.237
10.05	.113	.086	.226	.302	.389	.249	.147	.417	.661	.520	.056	.220	.509	.702	.412	.156	5.165
13.05	.028	.045	.034	.068	.111	.064	.036	.133	.144	.068	.014	.053	.160	.163	.094	.016	1.232
18.00	.000	.000	.002	.001	.003	.000	.000	.004	.004	.001	.001	.005	.008	.004	.000	.001	.034
99.00	.000	.000	.000	.000	.000	.000	.000	.000	.000	.000	.000	.000	.000	.000	.000	.000	.000
Total	3.225	2.970	4.200	4.922	5.359	4.932	5.086	5.907	7.287	8.620	5.596	4.765	6.865	8.097	6.334	4.071	88.234

NOTE: Wind directions in tables are presented in "wind from" and not "wind to" direction.

In order to determine the final mixed mode values 88.234% of the elevated value (presented in the 296 FT Mixed Mode table) and 11.766% of the ground level value (presented in the 33 FT Mixed Mode table) are used to calculate the final values.

Supplemental Table B - Continued

Mixed Mode Joint Frequency Distribution Table Summaries

196 Foot Elevation Data

Summary Table of Percent by Speed and Class

Class Speed	A	B	C	D	E	F	G
.45	.000	.000	.000	.023	.056	.014	.039
1.05	.002	.002	.008	.249	.307	.166	.224
2.05	.089	.050	.184	2.680	1.748	.785	.837
3.05	.358	.180	.684	4.451	3.666	1.724	1.378
4.05	.794	.331	.869	5.305	5.832	2.387	1.466
5.05	.885	.309	.724	5.544	6.119	2.367	1.317
6.05	.850	.190	.640	4.731	4.847	1.458	.699
8.05	1.026	.281	.610	5.969	5.482	.655	.216
10.05	.459	.102	.267	2.423	1.798	.096	.020
13.05	.089	.014	.077	.636	.411	.004	.000
18.00	.001	.000	.000	.018	.015	.000	.000
99.00	.000	.000	.000	.000	.000	.000	.000

Supplemental Table B - Continued

Mixed Mode Joint Frequency Distribution Table Summaries

33 Foot Elevation Data

Summary Table of Percent by Direction and Class

Class	N	NNE	NE	ENE	E	ESE	SE	SSE	S	SSW	SW	WSW	W	WNW	NW	NNW	Total
A	.022	.020	.015	.017	.018	.036	.033	.064	.067	.131	.026	.023	.079	.076	.069	.037	.732
B	.006	.006	.008	.005	.006	.011	.013	.009	.012	.027	.008	.010	.018	.026	.027	.009	.202
C	.016	.019	.017	.024	.023	.023	.025	.028	.041	.057	.024	.026	.063	.069	.041	.028	.527
D	.186	.203	.226	.328	.270	.190	.152	.170	.213	.268	.224	.335	.547	.815	.405	.247	4.779
E	.097	.102	.171	.263	.290	.277	.245	.345	.394	.383	.225	.252	.453	.379	.245	.126	4.247
F	.012	.026	.048	.048	.084	.116	.099	.117	.104	.059	.022	.022	.045	.036	.018	.014	.868
G	.003	.006	.007	.017	.058	.133	.052	.053	.036	.009	.006	.003	.013	.006	.005	.002	.410
Total	.341	.382	.493	.702	.749	.786	.619	.787	.868	.934	.535	.672	1.218	1.408	.810	.463	11.766

Summary Table of Percent by Direction and Speed

Speed	N	NNE	NE	ENE	E	ESE	SE	SSE	S	SSW	SW	WSW	W	WNW	NW	NNW	Total
.45	.000	.000	.000	.001	.000	.001	.001	.001	.003	.000	.001	.001	.000	.001	.000	.000	.010
1.05	.004	.005	.008	.012	.020	.036	.030	.036	.031	.009	.012	.010	.009	.005	.005	.005	.239
2.05	.029	.031	.056	.058	.107	.167	.131	.163	.160	.091	.077	.078	.092	.072	.038	.032	1.381
3.05	.047	.058	.090	.121	.126	.153	.149	.173	.206	.245	.173	.139	.231	.159	.097	.066	2.234
4.05	.066	.078	.106	.151	.123	.137	.132	.159	.175	.283	.144	.137	.247	.275	.176	.114	2.503
5.05	.068	.069	.089	.115	.101	.096	.073	.094	.121	.163	.075	.105	.214	.291	.174	.111	1.961
6.05	.044	.055	.056	.084	.091	.090	.050	.077	.091	.068	.024	.063	.136	.244	.140	.076	1.390
8.05	.051	.040	.056	.109	.116	.074	.040	.076	.071	.064	.014	.047	.156	.240	.145	.046	1.343
10.05	.025	.040	.032	.049	.042	.028	.009	.008	.009	.011	.014	.080	.093	.110	.035	.010	.594
13.05	.006	.006	.000	.002	.022	.003	.004	.000	.000	.000	.000	.014	.034	.011	.000	.003	.105
18.00	.000	.000	.000	.000	.000	.000	.000	.000	.000	.000	.000	.000	.006	.000	.000	.000	.006
99.00	.000	.000	.000	.000	.000	.000	.000	.000	.000	.000	.000	.000	.000	.000	.000	.000	.000
Total	.341	.382	.493	.702	.749	.786	.619	.787	.868	.934	.535	.672	1.218	1.408	.810	.463	11.766

NOTE Wind directions in tables are presented as "wind from" and not "wind to" direction.

Supplemental Table B - Continued

Mixed Mode Joint Frequency Distribution Table Summaries

33 Foot Elevation Data

Summary Table of Percent by Speed and Class

Class Speed	A	B	C	D	E	F	G
.45	.000	.000	.000	.000	.001	.002	.007
1.05	.008	.000	.000	.008	.042	.078	.103
2.05	.018	.006	.010	.149	.509	.457	.231
3.05	.095	.023	.068	.644	1.105	.244	.055
4.05	.197	.053	.128	1.080	.981	.059	.004
5.05	.177	.044	.122	.981	.617	.017	.002
6.05	.131	.035	.075	.767	.373	.004	.005
8.05	.093	.027	.090	.742	.383	.005	.002
10.05	.012	.011	.031	.340	.199	.002	.000
13.05	.001	.001	.003	.067	.032	.000	.000
18.00	.000	.000	.000	.000	.006	.000	.000
99.00	.000	.000	.000	.000	.000	.000	.000

Supplemental Table C

Ground Level Joint Frequency Distribution Table Summary

33 Foot Elevation

Summary Table of Percent by Direction and Class

Class	N	NNE	NE	ENE	E	ESE	SE	SSE	S	SSW	SW	WSW	W	WNW	NW	NNW	Total
A	.180	.185	.133	.155	.133	.224	.243	.352	.363	.856	.294	.247	.556	.539	.516	.303	5.280
B	.058	.058	.071	.048	.044	.095	.093	.079	.087	.222	.122	.083	.164	.180	.168	.085	1.658
C	.151	.189	.195	.201	.187	.195	.211	.220	.267	.527	.350	.313	.454	.527	.342	.253	4.582
D	1.614	1.666	1.966	2.403	2.014	1.814	1.586	1.537	1.562	2.410	2.476	2.451	3.540	4.726	2.898	2.124	36.786
E	.946	1.011	1.561	2.128	2.275	2.129	1.985	2.335	2.585	3.085	2.739	2.277	3.197	3.168	1.953	1.169	34.543
F	.255	.383	.631	.574	.863	1.222	1.085	1.175	1.016	.718	.491	.403	.619	.564	.296	.227	10.523
G	.088	.151	.205	.279	.886	1.841	.863	.691	.457	.212	.241	.126	.265	.175	.082	.068	6.628
Total	3.291	3.644	4.763	5.788	6.402	7.519	6.065	6.389	6.337	8.030	6.712	5.900	8.795	9.879	6.255	4.229	100.000

Summary Table of Percent by Direction and Speed

Speed	N	NNE	NE	ENE	E	ESE	SE	SSE	S	SSW	SW	WSW	W	WNW	NW	NNW	Total
.45	.047	.055	.086	.089	.083	.095	.132	.146	.115	.070	.123	.083	.073	.068	.054	.039	1.358
1.05	.214	.257	.417	.419	.723	.991	.860	.898	.730	.593	.782	.583	.504	.394	.214	.172	8.753
2.05	.612	.713	1.138	1.109	1.629	2.537	1.901	1.965	1.826	1.789	2.096	1.700	1.967	1.611	.987	.663	24.241
3.05	.713	.825	1.061	1.281	1.341	1.609	1.443	1.476	1.601	2.434	2.038	1.534	2.336	2.005	1.285	.935	23.916
4.05	.624	.701	.875	1.103	.983	.881	.925	.985	1.051	1.814	1.041	.974	1.629	1.905	1.395	.974	17.860
5.05	.489	.473	.576	.719	.607	.595	.429	.481	.576	.881	.452	.493	1.088	1.617	1.034	.751	11.259
6.05	.265	.323	.317	.471	.454	.446	.257	.278	.305	.299	.124	.296	.632	1.188	.717	.437	6.808
8.05	.263	.205	.238	.504	.481	.296	.102	.153	.124	.133	.037	.133	.413	.910	.504	.228	4.723
10.05	.056	.085	.056	.091	.073	.064	.012	.008	.010	.015	.019	.091	.114	.170	.066	.027	.956
13.05	.008	.008	.000	.002	.029	.006	.004	.000	.000	.000	.000	.014	.035	.012	.000	.004	.120
18.00	.000	.000	.000	.000	.000	.000	.000	.000	.000	.000	.000	.000	.006	.000	.000	.000	.006
99.00	.000	.000	.000	.000	.000	.000	.000	.000	.000	.000	.000	.000	.000	.000	.000	.000	.000
Total	3.291	3.644	4.763	5.788	6.402	7.519	6.065	6.389	6.337	8.030	6.712	5.900	8.795	9.879	6.255	4.229	100.000

NOTE: Wind directions in tables are presented in "wind from" and not "wind to" direction.

Supplemental Table C - Continued

Ground Level Joint Frequency Distribution Table Summary

33 Foot Elevation Data

Summary Table of Percent by Speed and Class

Class Speed	A	B	C	D	E	F	G
.45	.000	.000	.002	.056	.299	.375	.626
1.05	.041	.012	.054	.902	2.390	2.569	2.786
2.05	.439	.158	.553	5.844	9.138	5.363	2.747
3.05	1.285	.481	1.321	8.821	9.831	1.773	.404
4.05	1.544	.462	1.109	8.235	6.180	.307	.023
5.05	1.012	.255	.765	5.683	3.435	.097	.012
6.05	.618	.182	.388	3.856	1.721	.017	.025
8.05	.313	.089	.328	2.755	1.215	.017	.006
10.05	.027	.017	.058	.556	.294	.004	.000
13.05	.002	.002	.004	.077	.035	.000	.000
18.00	.000	.000	.000	.000	.006	.000	.000
99.00	.000	.000	.000	.000	.000	.000	.000

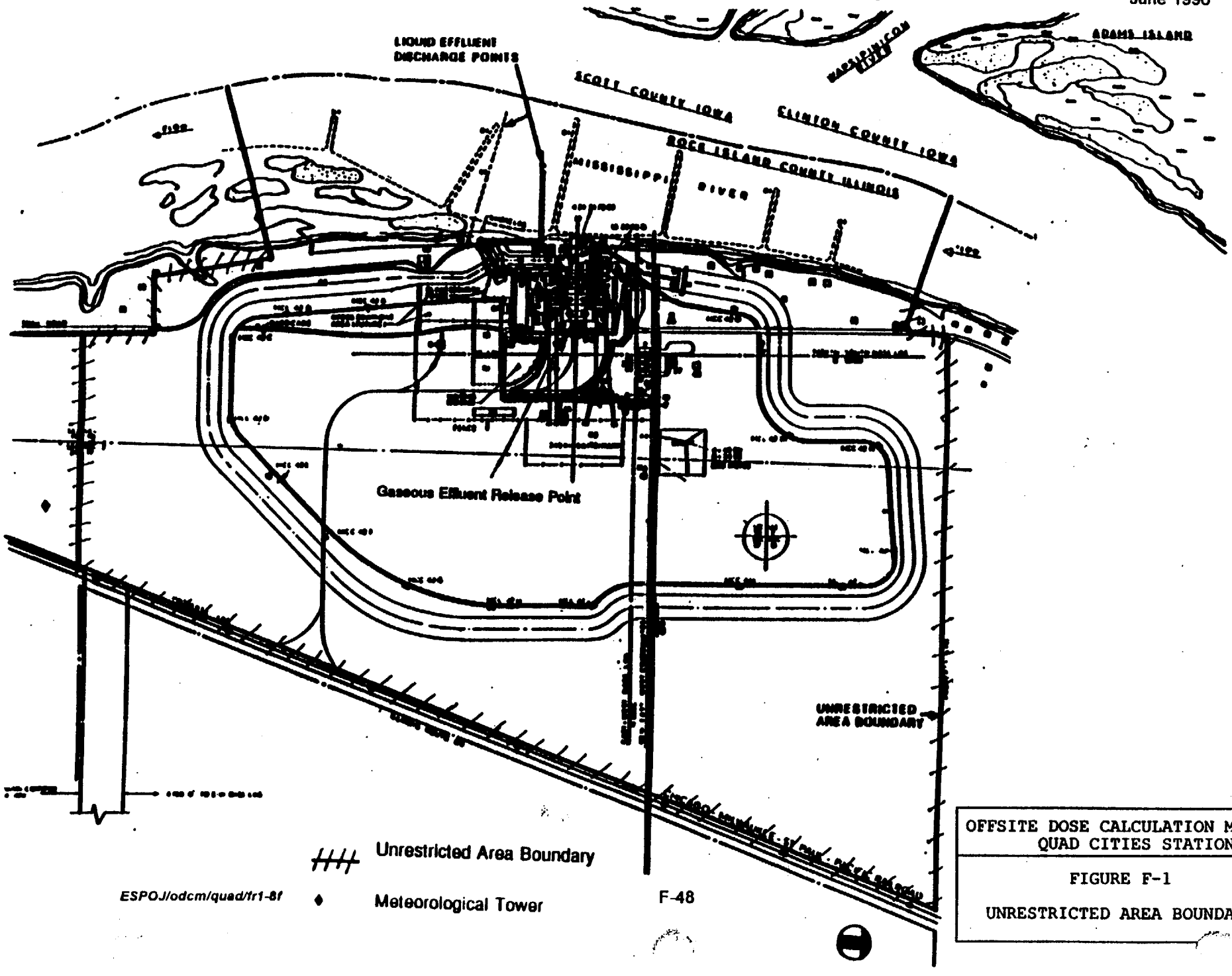

OFFSITE DOSE CALCULATION MANUAL
QUAD CITIES STATION

FIGURE F-1

UNRESTRICTED AREA BOUNDARY

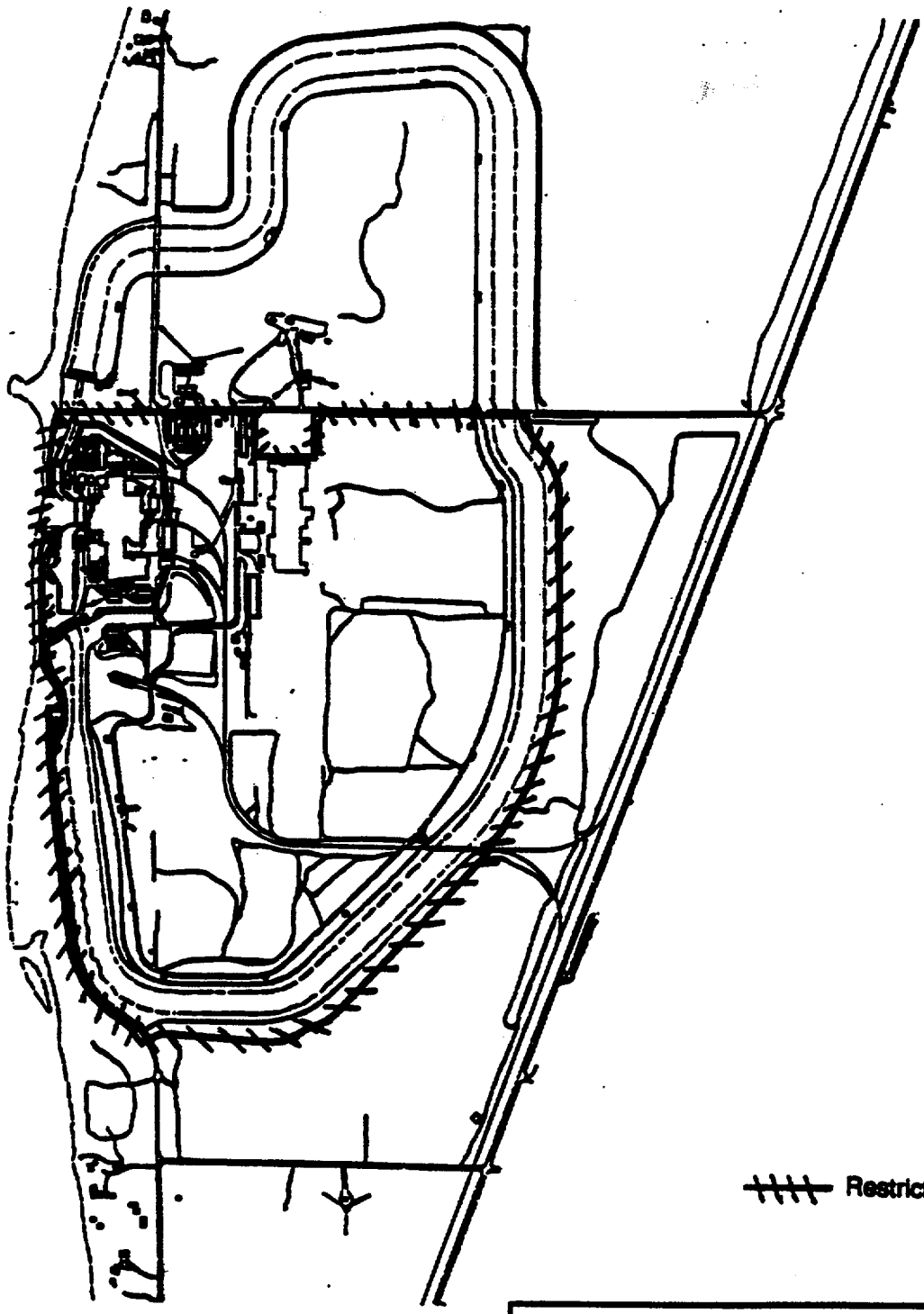

Restricted Area Boundary

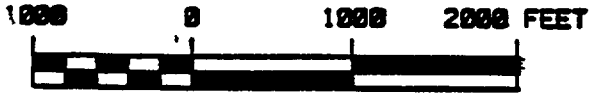

GRAPHIC SCALE

OFFSITE DOSE CALCULATION MANUAL
QUAD CITIES STATION

FIGURE F-2

RESTRICTED AREA BOUNDARY

BYRON STATION

BYRON ANNEX INDEX

CHAPTER 10

REVISION 1.4

CHAPTER 10

RADIOACTIVE EFFLUENT TREATMENT AND MONITORING

TABLE OF CONTENTS

NUMBER		PAGE
10.1	AIRBORNE RELEASES	10-1
1.	System Description	10-1
1.	Waste Gas Holdup System	10-1
2.	Ventilation Exhaust Treatment System	10-1
2.	Radiation Monitors	10-1
1.	Auxiliary Building Vent Effluent Monitors	10-1
2.	Containment Purge Effluent Monitors	10-2
3.	Waste Gas Decay Tank Monitors	10-2
4.	Gland Steam and Condenser Air Ejector Monitors	10-2
5.	Radwaste Building Ventilation Monitor	10-3
6.	Miscellaneous Ventilation Monitors	10-3
3.	Alarm and Trip Setpoints	10-3
1.	Setpoint Calculations	10-3
1.	Auxiliary Building Vent Effluent Monitors	10-3
2.	Containment Purge Effluent Monitors	10-3
3.	Waste Gas Decay Tank Effluent Monitors	10-3
2.	Release Limits	10-4
3.	Release Mixture	10-5
4.	Conversion Factors	10-5
5.	HVAC Dilution Flow Rates	10-5
4.	Allocation of Effluents from Common Release Points	10-5
5.	Dose Projections for Batch Releases	10-5

CHAPTER 10

RADIOACTIVE EFFLUENT TREATMENT AND MONITORING

TABLE OF CONTENTS (Cont'd)

NUMBER		PAGE
10.2	LIQUID RELEASES	10-5
1.	System Description	10-5
1.	Release Tanks	10-6
2.	Turbine Building Fire and Oil Sump	10-6
3.	Condensate Polisher Sump	10-6
2.	Radiation Monitors	10-6
1.	Liquid Radwaste Effluent Monitors	10-6
2.	Station Blowdown Monitor	10-6
3.	Reactor Containment Fan Cooler (RCFC) and Essential Service Water (SX) Outlet Line Monitors	10-6
4.	Turbine Building Fire and Oil Sump Monitor	10-7
5.	Condensate Polisher Sump Monitor	10-7
6.	Component Cooling Water Monitor	10-7
3.	Alarm and Trip Setpoints	10-7
1.	Setpoint Calculations	10-7
1.	Station Blowdown Monitor	10-8
1.	Release Mixture	10-8
2.	Liquid Radwaste Effluent Monitor	10-8
1.	Release Tank Discharge Flow Rate	10-8
2.	Release Mixture	10-9
3.	Liquid Dilution Flow Rates	10-9
4.	Projected Concentrations for Releases	10-9
3.	Other Liquid Effluent Monitors	10-10
4.	Conversion Factors	10-10
4.	Allocation of Effluents from Common Release Points	10-10
10.3	SOLIDIFICATION OF WASTE/PROCESS CONTROL PROGRAM	10-10

CHAPTER 10

LIST OF TABLES

NUMBER		PAGE
10-1	Assumed Composition of the Byron Station Noble Gas Effluent	10-11
10-2	Assumed Composition of the Byron Station Liquid Effluent	10-12

CHAPTER 10

LIST OF FIGURES

NUMBER		PAGE
10-1	Simplified HVAC and Gaseous Effluent Flow Diagram	10-13
10-2	Simplified Liquid Radwaste Processing Diagram	10-15
10-3	Liquid Release Flowpath	10-16

CHAPTER 10

RADIOACTIVE EFFLUENT TREATMENT AND MONITORING

10.1 AIRBORNE RELEASES

10.1.1 System Description

A simplified HVAC and gaseous effluent flow diagram is provided in Figure 10-1. The principal release points for potentially radioactive airborne effluents are the two auxiliary building vent stacks (designated Vent Stack 1 and Vent Stack 2 in Figure 10-1). In the classification scheme of Section 4.1.4, each is classified as a vent release point (see Table A-1 of Appendix A).

10.1.1.1 Waste Gas Holdup System

The waste gas holdup system is designed and installed to reduce radioactive gaseous effluents by collecting reactor coolant system off-gases from the reactor coolant system and providing for delay or holdup to reduce the total radioactivity by radiodecay prior to release to the environment. The system is described in Chapter 11 of the Byron/Braidwood UFSAR.

10.1.1.2 Ventilation Exhaust Treatment System

Ventilation exhaust treatment systems are designed and installed to reduce gaseous radioiodine or radioactive material in particulate form in gaseous effluents by passing ventilation or vent exhaust gases through charcoal adsorbers and/or HEPA filters prior to release to the environment. Such a system is not considered to have any effect on noble gas effluents. The ventilation exhaust treatment systems are shown in Figure 10-1.

Engineered safety features atmospheric cleanup systems are not considered to be ventilation exhaust treatment system components.

10.1.2 Radiation Monitors

10.1.2.1 Auxiliary Building Vent Effluent Monitors

Monitors 1RE-PR028 (Unit 1) and 2RE-PR028 (Unit 2) continuously monitor the final effluent from the auxiliary building vent stacks.

Both vent stack monitors feature automatic isokinetic sampling, noble gas monitoring, grab sampling, iodine and particulate sampling and tritium sampling.

No automatic isolation or control functions are performed by these monitors. Pertinent information on these monitors is provided in Byron/Braidwood UFSAR Chapter 11.

10.1.2.2 Containment Purge Effluent Monitors

Monitors 1RE-PR001 (Unit 1) and 2RE-PR001 (Unit 2) continuously monitor the effluent from the Unit 1 and Unit 2 containments, respectively. When airborne radioactivity in the containment purge effluent stream exceeds a specified level station personnel will follow established procedures to terminate the release by manually activating the containment purge valves. Additionally, the auxiliary building vent effluent monitors provide an independent, redundant means of monitoring the containment purge effluent.

No automatic isolation or control functions are performed by these monitors.

Pertinent information on these monitors is provided in Byron/Braidwood UFSAR Chapter 11.

Monitors 1(2)RE-AR011 and 1(2)RE-AR012 monitor the containment atmosphere. On high alarm during a containment purge, these monitors will automatically terminate the purge.

10.1.2.3 Waste Gas Decay Tank Monitors

Monitors 0RE-PR002A/B continuously monitor the noble gas activity released from the gas decay tanks.

On high alarm, the monitors automatically initiate closure of the valve 0GW104 thus terminating the release.

Pertinent information on these monitors and associated control devices is provided in Byron/Braidwood UFSAR Chapter 11.

10.1.2.4 Gland Steam and Condenser Air Ejector Monitors

Monitors 1RE-PR027 and 2RE-PR027 continuously monitor the condenser air ejector gas from Units 1 and 2, respectively.

Pertinent information on these monitors is provided in Byron/Braidwood UFSAR Chapter 11.

10.1.2.5 Radwaste Building Ventilation

Monitor 0RE-PR026 continuously monitors radioactivity in the radwaste building ventilation system. On high alarm, 0RE-PR026 initiates isolation of the radwaste building ventilation system.

Pertinent information on this monitor is provided in Byron/Braidwood UFSAR Chapter 11.

10.1.2.6 Miscellaneous Ventilation Monitors

Monitor 0RE-PR003 continuously monitors radioactivity in the ventilation exhaust from the laboratory fume hoods. No control device is initiated by this channel.

Pertinent information on this monitor and associated devices is provided in Byron/Braidwood UFSAR Chapter 11.

10.1.3 Alarm and Trip Setpoints

10.1.3.1 Setpoint Calculation

10.1.3.1.1 Auxiliary Building Vent Effluent Monitors

The setpoints for the low range noble gas channel are conservatively established at 2.5% of the maximum permissible release rate for the high alarm and 0.25% of the maximum release rate for the alert alarm.

The setpoints for the high range noble gas channel are conservatively established at 50% of the maximum permissible release rate for the high alarm and 5% of the maximum release rate for the alert alarm.

10.1.3.1.2 Containment Purge Effluent Monitors

The setpoints are established at 1.25 times the containment noble gas activity during purge.

10.1.3.1.3 Waste Gas Decay Tank Effluent Monitors

The setpoints are established at 1.25 times the analyzed waste gas tank activity during release.

10.1.3.2 Release Limits

Alarm and trip setpoints of gaseous effluent monitors are established to ensure that the release rate limits of RETS Section 12.4 are not exceeded. The release limits are found by solving Equations 10-1 and 10-2 for the total allowed release rate of vent releases, Q_{tv}.

$$(1.11)Q_{tv}\Sigma\{V_iF_i\} \leq 500 \text{ mrem/yr} \qquad (10\text{-}1)$$

$$Q_{tv}\Sigma\{(f_i)[L_i\{X/Q)_v\exp(-\lambda_i R/3600\ \mu_v) + 1.11\ V_i]\} < 3000 \text{ mrem/yr} \qquad (10\text{-}2)$$

The summations are over noble gas radionuclides i.

f_i Fractional Radionuclide Composition

The release rate of noble gas radionuclide i divided by the total release rate of all noble gas radionuclides.

Q_{tv} Total Allowed Release Rate, Vent Release [μCi/sec]

The total allowed release rate of all noble gas radionuclides released as vent releases.

The remaining parameters in Equation 10-1 have the same definitions as in Equation A-8 of Appendix A. The remaining parameters in Equation 10-2 have the same definition as in Equation A-9 of Appendix A.

Equation 10-1 is based on Equation A-8 of Appendix A and the RETS restriction on whole body dose rate (500 mrem/yr) due to noble gases released in gaseous effluents (see Section A.1.3.1 of Appendix A). Equation 10-2 is based on Equation A-9 of Appendix A and the RETS restriction on skin dose rate (3000 mrem/yr) due to noble gases released in gaseous effluents (see Section A.1.3.2 of Appendix A).

Since the solution to Equation 10-2 is more conservative than the solution to Equation 10-1, the value of Equation 10-2 (1.02×10^7 μCi/sec) is used as the limiting noble gas release rate. During evolutions involving releases from the containment or waste gas decay tanks, the total station release rate is procedurally limited such that the maximum permissible release rate is not exceeded.

10.1.3.3 Release Mixture

In the determination of alarm and trip setpoints, the radioactivity mixture in exhaust air is assumed to have the radionuclide composition of Table 10-1.

10.1.3.4 Conversion Factors.

The response curves used to determine the monitor count rates are based on the sensitivity to Xe-133 for conservatism.

10.1.3.5 HVAC Dilution Flow Rates

The plant vent stack flow rates are obtained from the RM-11 console in the control room. If the values cannot be obtained from RM-11, flow rates can be estimated from the operating fan combinations.

10.1.4 Allocation of Effluents from Common Release Points

Radioactive gaseous effluents released from the auxiliary building, miscellaneous ventilation systems and the gas decay tanks are comprised of contributions from both units. Consequently, allocation is made evenly between units.

10.1.5 Dose Projections for Batch Releases

The 10CFR20 dose limits have been converted into a station administrative release rate limit using the methodology in the ODCM. Compliance is verified prior to each release. Doses are calculated after purging the containment or venting the waste gas decay tanks. Per procedure, representative samples are obtained and analyzed, and the doses calculated on a monthly basis to verify compliance with 10CFR50.

10.2 LIQUID RELEASE

10.2.1 System Description

A simplified liquid release flowpath diagram is provided in Figure 10-3. A simplified liquid radwaste processing diagram is provided in Figure 10-2.

The liquid radwaste treatment system is designed and installed to reduce radioactive liquid effluents by collecting the liquids, providing for retention or holdup, and providing for treatment by demineralizer for the purpose of reducing the total radioactivity prior to release to the environment. The system is described in Chapter 11 of the Byron/Braidwood Updated Final Safety Analysis Report.

10.2.1.1 Release Tanks

There are two radwaste release tanks (0WX01T and 0WX26T 30,000-gallon capacity each) which receive liquid waste before discharge to the Rock River.

10.2.1.2 Turbine Building Fire and Oil Sump

The turbine building fire and oil sump receives water from selected turbine building sumps, the tendon tunnel sumps, and the diesel fuel oil storage sumps, all of which are normally non-radioactive but potentially contaminated. The effluent from this sump is monitored, and if radioactive contamination exceeds a predetermined level pump operation is automatically terminated. The water may then be sent to the liquid radwaste treatment system.

10.2.1.3 Condensate Polisher Sump

The condensate polisher sump receives waste water from the condensate polisher system which is normally non-radioactive but potentially contaminated. The effluent from this sump is monitored and if radioactive contamination exceeds a predetermined level sump discharge is terminated and major condensate polisher inputs to the sump are automatically isolated. The water may then be sent to the liquid radwaste treatment system.

10.2.2 Radiation Monitors

10.2.2.1 Liquid Radwaste Effluent Monitors.

Monitor 0RE-PR001 is used to monitor all releases from the release tanks. On high alarm, the monitor automatically initiates closure of valves 0WX-353 and 0WX-869 to terminate the release.

Pertinent information on the monitor and associated control devices is provided in Byron/Braidwood UFSAR Chapter 11.

10.2.2.2 Station Blowdown Monitor

Monitor 0RE-PR010 continuously monitors the recirculating water blowdown. No control device is initiated by this channel.

Pertinent information on this monitor is provided in Byron/Braidwood UFSAR Chapter 11.

10.2.2.3 Reactor Containment Fan Cooler (RCFC) and Essential Service Water (SX) Outlet Line Monitors

Monitors 1RE-PR002, 2RE-PR002, 1RE-PR003, and 2RE-PR003 continuously monitor the RCFC and SX outlet lines.

No control device is initiated by these channels.

Pertinent information on these monitors is provided in Byron/Braidwood UFSAR Chapter 11.

10.2.2.4 Turbine Building Fire and Oil Sump Monitor

Monitor 0RE-PR005 continuously monitors the fire and oil sump discharge. On high alarm the monitor automatically initiates an interlock to trip the discharge pumps, close valve 0OD030, and terminate the release. Pertinent information on this monitor is provided in Byron/Braidwood UFSAR Chapter 11.

10.2.2.5 Condensate Polisher Sump Monitor

Monitor 0RE-PR041 continuously monitors the condensate polisher sump discharge. On high alarm the monitor automatically initiates an interlock to trip the discharge pumps and terminate the release. Pertinent information on this monitor is provided in Byron/Braidwood UFSAR Chapter 11.

10.2.2.6 Component Cooling Water Monitor

Monitors 0RE-PR009 (common), 1RE-PR009 (Unit 1), and 2RE-PR009 (Unit 2) continuously monitor the component cooling water heat exchanger outlets. On high alarm 0RE-PR009 initiates closure of both component cooling water surge tank (CCWST) vents, 1RE-PR009 initiates closure of the Unit 1 CCWST vent, and 2RE-PR009 initiates closure of the Unit 2 CCWST vent.

Pertinent information on this monitor is provided in Byron/Braidwood UFSAR Chapter 11.

10.2.3 Alarm and Trip Setpoints

10.2.3.1 Setpoint Calculation

Alarm and trip setpoints of liquid effluent monitors at the principal release points are established to ensure that the limits of RETS are not exceeded in the unrestricted area. Setpoint calculations normally consist of identified release mixtures, dilution factors, conversion factors (detector sensitivity), and conservatism factors.

10.2.3.1.1 Station Blowdown Monitor

During release, the monitor setpoint is found by solving equation 10-3.

$$P \leq C^{CW} + (1.50 \times C^{T}) \times (F^{r}_{max} / (F^{CW} + F^{r}_{max})) \qquad (10\text{-}3)$$

P	Release Setpoint	[µCi/ml]
1.50	Factor to account for minor fluctuations in count rate	
C^{CW}	Concentration of activity in the circulating water blowdown at the time of discharge ("Background reading")	[µCi/ml]
C^{T}	Analyzed activity in the release tank excluding tritium	[µCi/ml]
F^{CW}	Circulating Water Blowdown Rate	[gpm]
F^{r}_{max}	Maximum Release Tank Discharge Flow Rate The flow rate from the radwaste discharge tank.	[gpm]

10.2.3.1.1.1 Release Mixture

The release mixture used for the setpoint determination is the radionuclide mix identified in the release tank grab sample isotopic analysis.

10.2.3.1.2 Liquid Radwaste Effluent Monitor

During release the setpoint is established at 1.5 times the analyzed tank activity plus the background reading.

However, per procedure, the maximum discharge flow rate is limited to a value that will result in less than 50% of 10*DWC at the discharge point. (See Section 10.2.3.1.2.1)

10.2.3.1.2.1 Release Tank Discharge Flow Rate

Prior to each batch release, a grab sample is obtained.

The results of the analysis of the waste sample determine the discharge rate of each batch as follows:

$$F^{r}_{max} = 0.5(F^{d}_{act} / \Sigma(C_i / 10 * DWC_i)) \qquad (10\text{-}4)$$

The summation is over radionuclides i.

F^{r}_{max}	Maximum Permitted Discharge Flow Rate The maximum permitted flow rate from the radwaste discharge tank based on radiological limits (not chemistry limits which may be more restrictive)	[gpm]
F^{d}_{act}	Circulating Water Blowdown Rate	[gpm]
C_i	Concentration of Radionuclide i in the Release Tank The concentration of radioactivity in the radwaste discharge tank based on measurements of a sample drawn from the tank.	[µCi/ml]

DWC_i	Derived Water Concentration	[µCi/ml]
	The concentration of radionuclide i given in Appendix B, Table 2, Column 2 to 10CFR20.1001 - 20.2402.	
10	Multiplier	

10.2.3.1.2.2 Release Mixture

The release mixture used for the setpoint determination is the radionuclide mix identified in the release tank grab sample isotopic analysis.

10.2.3.1.2.3 Liquid Dilution Flow Rates

Dilution flow rates are obtained from the main control board in the control room. If this information is unavailable, releases may continue for up to 30 days provided the dilution flow rates are estimated every 4 hours during the release, in accordance with Technical Requirements Manual Table T3.11.a-1 (ATR Table 3.3-12).

10.2.3.1.2.4 Projected Concentrations for Releases

After determining F^r_{max} 0from Equation 10-4, RETS compliance is verified using Equations 10-5 and 10-6.

$$C_i^a = C_i^T [F^r_{max} / (F^r_{max} + F^d_{act})] \quad (10\text{-}5)$$

$$\Sigma\{ C_i^a / 10 * DWC_i \} \leq 1 \quad (10\text{-}6)$$

The summation is over radionuclides i.

C_i^a	Concentration of Radionuclide i in the Unrestricted Area	[µCi/mL]
	The calculated concentration of radionuclide i in the unrestricted area as determined by Equation 10-5.	
C_i^T	Concentration of Radionuclide i in the Release Tank	[µCi/mL]
	The concentration of radioactivity in the radwaste discharge tank based on measurements of a sample drawn from the tank.	
DWC_i	Derived Water Concentration	[µCi/ml]
	The concentration of radionuclide i given in Appendix B, Table 2, Column 2 to 10CFR20.1001 - 20.2402.	
10	Multiplier	
F^r_{max}	Maximum Release Tank Discharge Flow Rate	[gpm]
F^d_{act}	Circulating Water Blowdown Rate	[gpm]

10.2.3.1.3 Other Liquid Effluent Monitors

For all other liquid effluent monitors, including 0RE-PR001 and 0RE-PR010 when not batch releasing, setpoints are determined such that the concentration limits do not exceed 10 times the DWC value given in Appendix B, Table 2, Column 2 to 10CFR20.1001 - 20.2402 in the unrestricted area. Release mixtures are based on a representative isotopic mixture of the waste stream or inputs to the waste stream, or defaulted to the mix listed in Table 10-2.

10.2.3.1.4 Conversion Factors

The readouts for the liquid effluent monitors are in uCi/ml. Conversion factors are determined for each monitor (CPM/uCi/ml).

10.2.4 Allocation of Effluents from Common Release Points.

Radioactive liquid effluents released from either release tank (0WX01T or 0WX26T) are comprised of contributions from both units. Under normal operating conditions, it is difficult to apportion the radioactivity between the units. Consequently, allocation is made evenly between units.

10.3 SOLIDIFICATION OF WASTE/PROCESS CONTROL PROGRAM

The process control program (PCP) contains the sampling, analysis, and formulation determination by which solidification of radioactive wastes from liquid systems is ensured.

Table 10-1

Assumed Composition of the Byron Station
Noble Gas Effluent

Isotope	Percent of Effluent
Ar-41	00.89
Kr-85m	00.18
Kr-85	24.9
Kr-87	0.04
Kr-88	00.28
Xe-131m	01.4
Xe-133m	00.57
Xe-133	71.1
Xe-135	00.53
Xe-138	00.04

Table 10-2

Assumed Composition of the Byron Station Liquid Effluent

Isotope	Concentration	Isotope	Concentration
	(μCi/ml)		(μCi/ml)
Ru-103	8.00E - 06	Mn-54	1.00E - 05
Ag-110m	3.00E - 06	Fe-59	5.00E - 06
Te-127	2.00E - 05	Co-58	9.00E - 06
Te-129m	2.00E - 06	Co-60	3.00E - 06
Te-131m	4.00E - 06	Rb-86	2.00E - 06
Te-132	2.00E - 06	Zr-95	6.00E - 06
I-130	3.00E - 07	Nb-95	1.00E - 05
I-131	3.00E - 08	Mo-99	4.00E - 06
I-132	8.00E - 07		
I-133	1.00E - 07		
I-135	4.00E - 07		
Cs-134	9.00E - 07		
Cs-136	9.00E - 06		
Cs-137	2.00E - 06		
Ce-144	1.00E - 06		
Np-239	1.00E - 05		

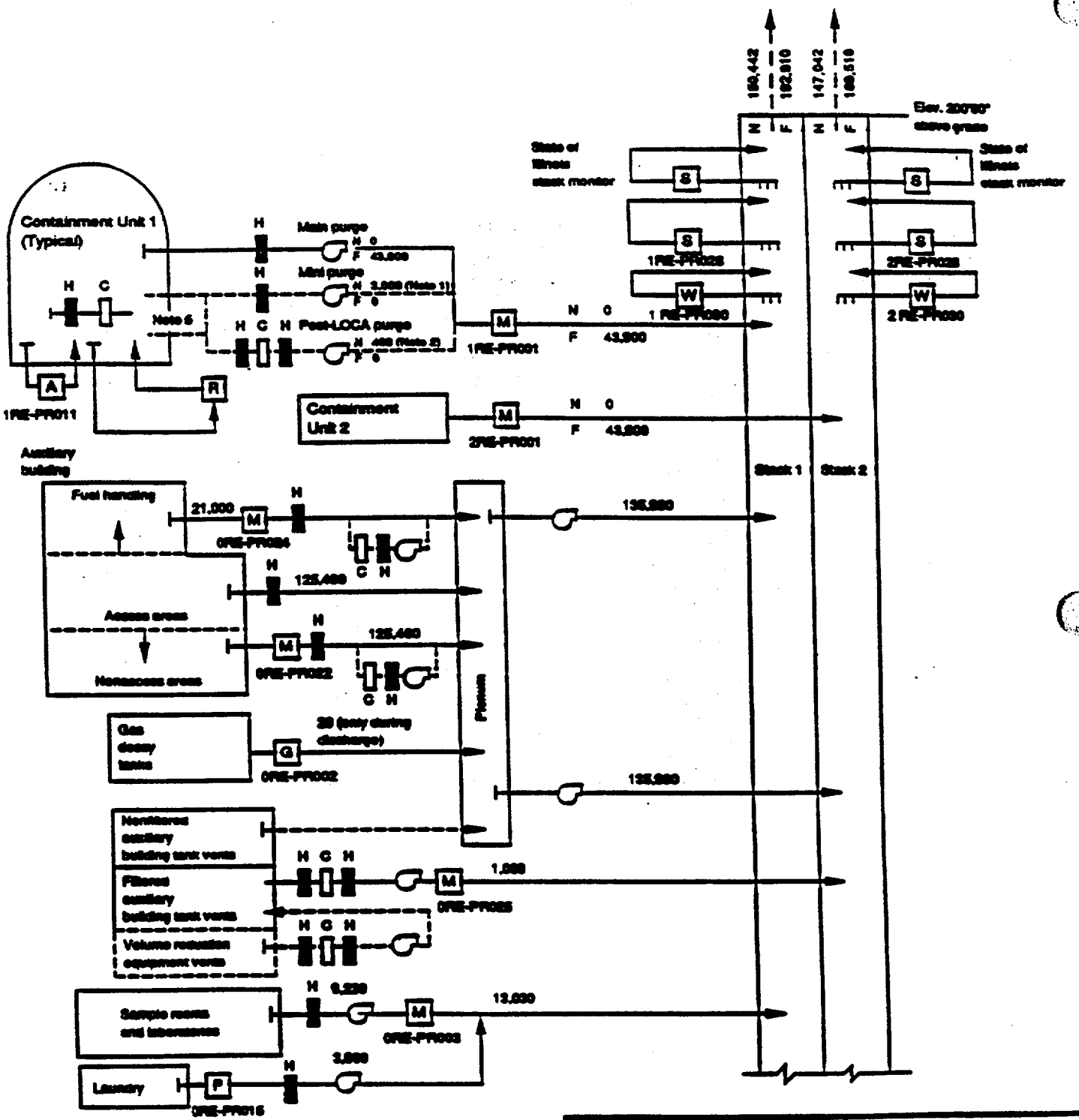

OFFSITE DOSE CALCULATION MANUAL
BYRON STATION

FIGURE 10-1

SIMPLIFIED HVAC AND GASEOUS EFFLUENT FLOW DIAGRAM (SHEET 1 OF 2)

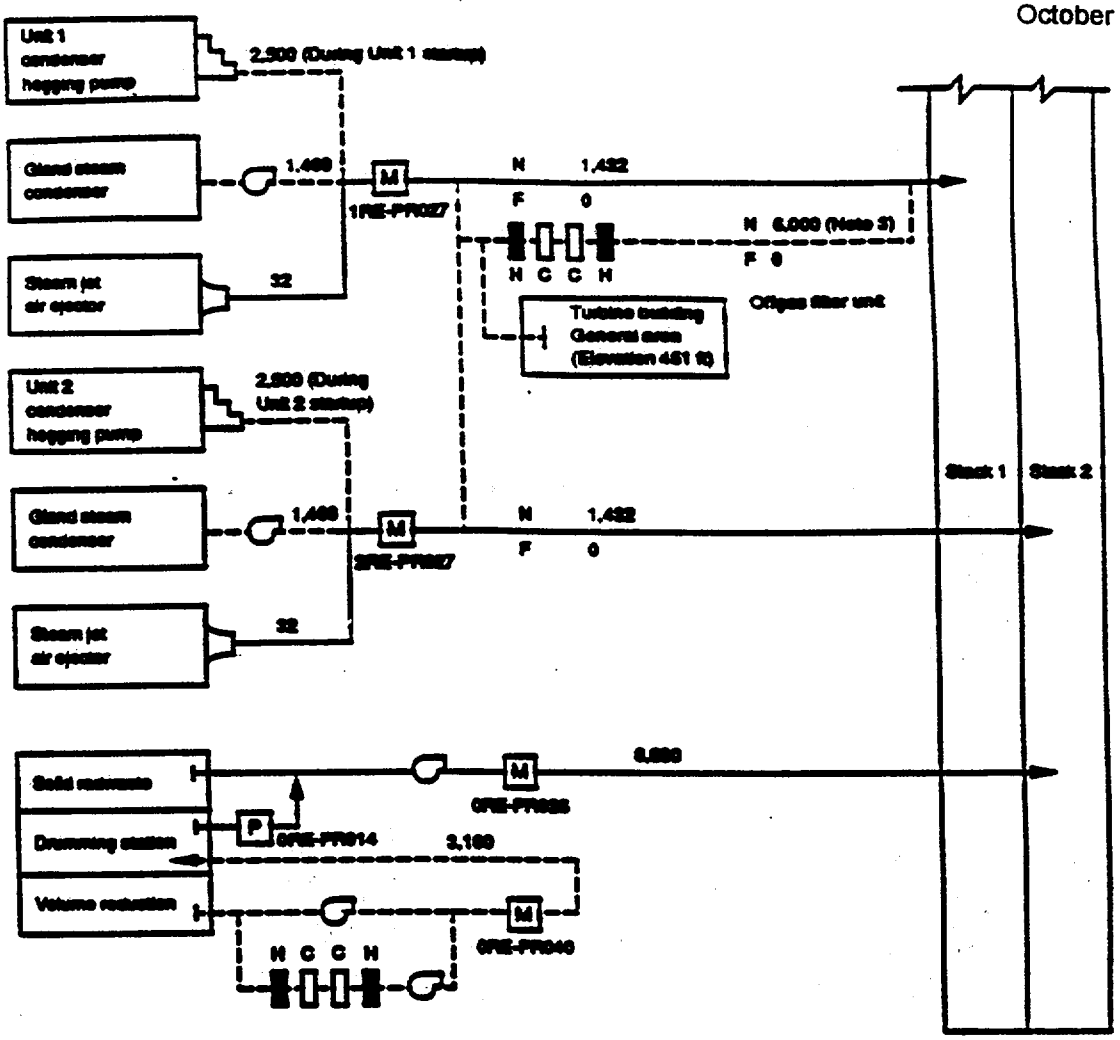

Legend

——	Normal or frequent flow path
- - - -	Occasional flow path
A	Containment atmosphere radiation monitor
C	Charcoal filter
F	Refueling
G	Noble gas radiation monitor (offline)
H	HEPA filter
M	Three-channel radiation monitor for particulate, iodine, and noble gas (offline)
N	Normal operation
P	particulate monitor (offline)
R	Hydrogen recombiner
S	Normal range stack radiation monitor (particulate, iodine, and noble gas)
W	Wide-range stack noble radiation monitor

Notes

1. Used intermittently to vent containment during normal operation.
2. Used only during postaccident operation.
3. Filter unit operates only when high radiation is detected in offgas system effluent.
4. All flow rates are design flow rates in cubic feet per minute.
5. Integrated Leak Rate Test (ILRT) pressure relief point (an alternate release point that is seldom used).

OFFSITE DOSE CALCULATION MANUAL
BYRON STATION

FIGURE 10-1

SIMPLIFIED HVAC AND GASEOUS EFFLUENT FLOW DIAGRAM (SHEET 2 OF 2)

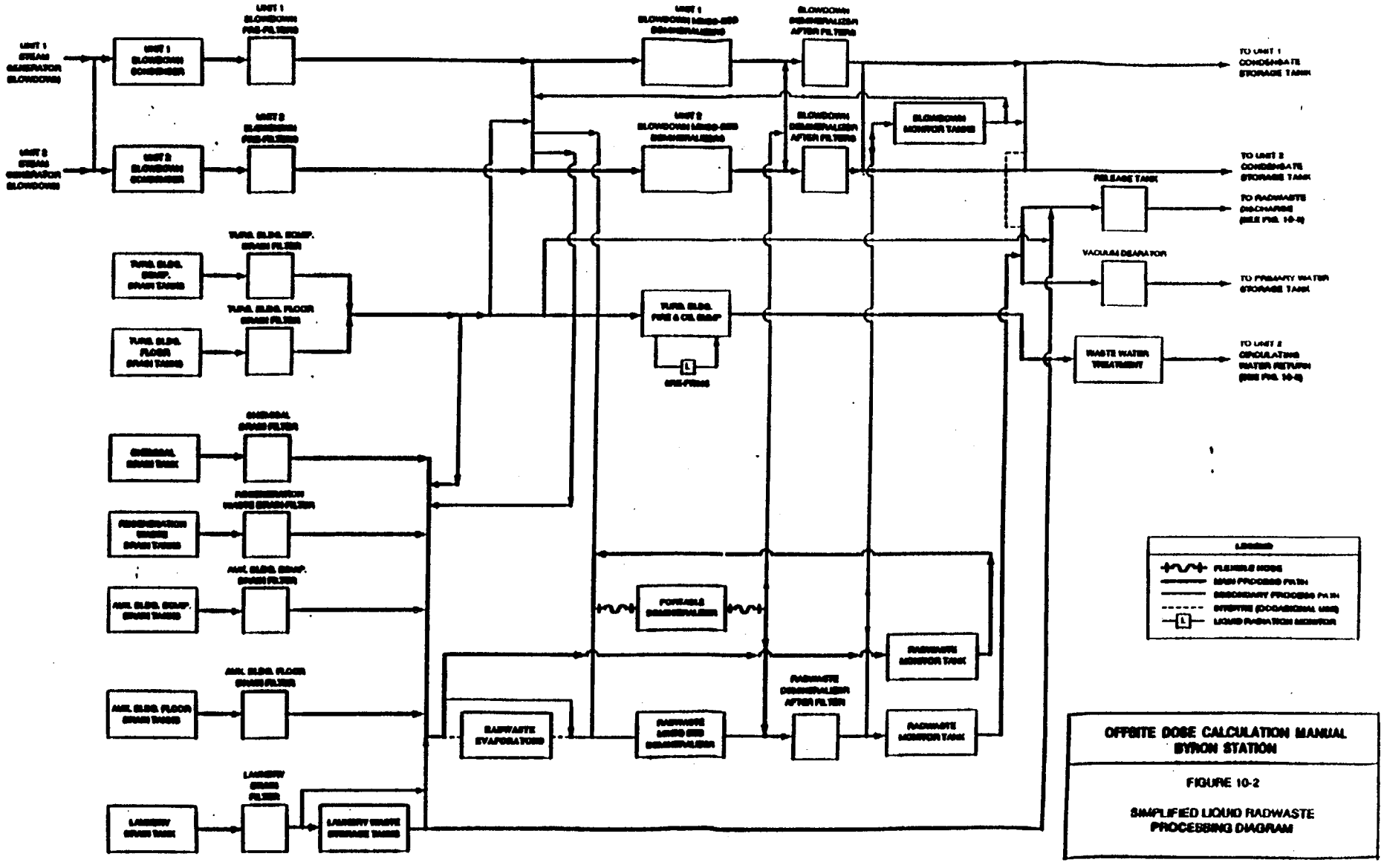

OFFSITE DOSE CALCULATION MANUAL
BYRON STATION

FIGURE 10-2

SIMPLIFIED LIQUID RADWASTE PROCESSING DIAGRAM

(p:\radprot\odcm\by10R-4.doc)

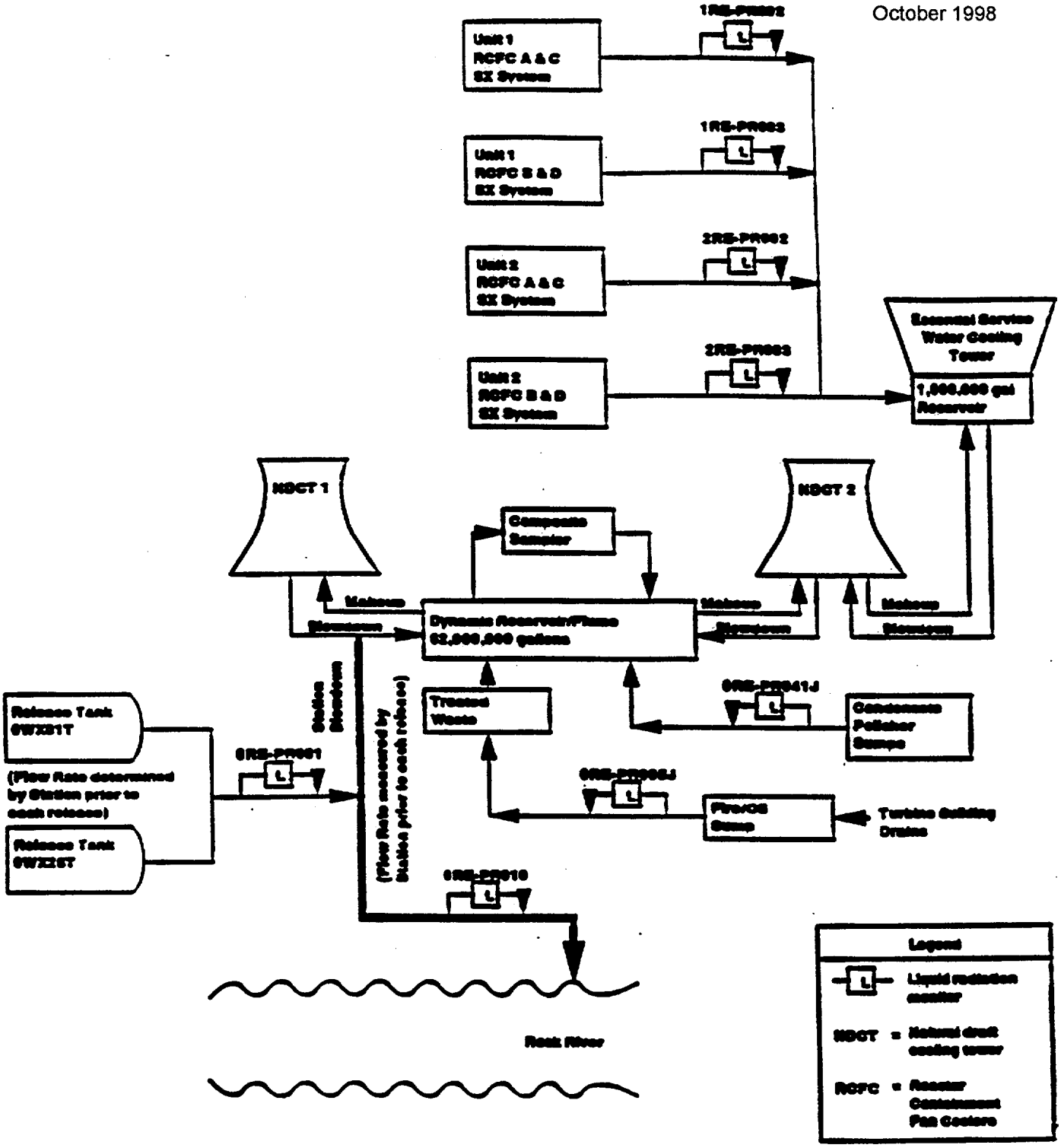

OFFSITE DOSE CALCULATION MANUAL
BYRON STATION

FIGURE 10-3

LIQUID RELEASE FLOWPATH

BYRON ANNEX INDEX

Chapter 11

Revision 1.6

CHAPTER 11
RADIOLOGICAL ENVIRONMENTAL MONITORING PROGRAM
TABLE OF CONTENTS

	PAGE
11.0 RADIOLOGICAL ENVIRONMENTAL MONITORING PROGRAM	11-1

CHAPTER 11

LIST OF TABLES

NUMBER	TITLE	PAGE
11-1	Radiological Environmental Monitoring Program	11-2

CHAPTER 11

LIST OF FIGURES

NUMBER	TITLE	PAGE
11-1	Onsite Air Sampling Locations	11-10
11-2	Offsite Air Sampling Locations	11-11
11-3	Inner Ring and Outer Ring TLD Locations	11-12
11-4	Ingestion and Waterborne Exposure Pathway Sample Locations	11-13

CHAPTER 11

RADIOLOGICAL ENVIRONMENTAL MONITORING PROGRAM

The radiological environmental monitoring program for the environs around Byron Station is given in Table 11-1.

Figures 11-1 through 11-4 show sampling and monitoring locations.

Table 11-1

Radiological Environmental Monitoring Program

Exposure Pathway and/or Sample	Sampling or Monitoring Locations	Sampling or Collection Frequency	Type of Frequency of Analysis
1. Airborne			
Radioiodine and Particulates	a. Indicators-Near Field BY-21, Byron Nearsite N, 0.3 mi N (0.5 km A) BY-22, Byron Nearsite ESE, 0.4 mi ESE (0.6 km F) BY-23, Byron Nearsite S, 0.6 mi S (1.0 km J) BY-24, Byron Nearsite SW, 0.6 mi SW (1.0 km L)	Continuous sampler operation with particulate sample collection weekly, or more frequently if required by dust loading, and radioiodine canister collection biweekly.	Radioiodine Canister: I-131 analysis biweekly on near field and control samples.[1] Particulate Sampler: Gross beta analysis following weekly filter change[2] and gamma isotopic analysis[3] quarterly on composite filters by location on near field and control samples.
	b. Indicators-Far Field BY-1, Byron, 3.0 mi N (4.8 km A) BY-4, Paynes Pt., 5.0 mi SE (8.0 km G) BY-6, Oregon, 4.7 mi SSW (7.5 km K)		

Table 11-1 (Cont.)

Radiological Environmental Monitoring Program

Exposure Pathway and/or Sample	Sampling or Monitoring Locations	Sampling or Collection Frequency	Type of Frequency of Analysis
1. Airborne (Cont'd)	c. Controls		
	BY-8, Leaf River, 6.8 mi WNW (10.9 km P)		
2. Direct Radiation	a. Indicators-Inner Ring	Quarterly	Gamma dose quarterly
	BY-101-1, 0.3 mi N (0.5 km A)		
	BY-101-2, 0.3 mi N (0.5 km A)		
	BY-102-1, 0.9 mi NNE (1.5 km B)		
	BY-102-2, 1.0 mi NNE (1.5 km B)		
	BY-103-1, 1.7 mi NE (2.8 km C)		
	BY-103-2, 1.7 mi NE (2.7 km C)		
	BY-104-1, 1.5 mi ENE (2.4 km D)		
	BY-104-2, 1.5 mi ENE (2.4 km D)		
	BY-105-1, 1.3 mi E (2.1 km E)		
	BY-105-2, 1.3 mi E (2.1 km E)		
	BY-106-1, 1.4 mi ESE (2.3 km F)		
	BY-106-2, 1.4 mi ESE (2.3 km F)		
	BY-107-1, 1.4 mi SE (2.2 km G)		
	BY-107-2, 1.4 mi SE (2.2 km G)		
	BY-108-1, 0.7 mi SSE (1.1 km H)		
	BY-108-2, 0.6 mi SSE (1.0 km H)		
	BY-109-1, 0.6 mi S (1.0 km J)		
	BY-109-2, 0.6 mi S (1.0 km J)		
	BY-110-1, 0.6 mi SSW (1.0 km K)		
	BY-110-2, 0.6 mi SSW (1.0 km K)		
	BY-111-3, 0.7 mi SW (1.1 km L)		
	BY-111-4, 0.8 mi SW (1.3 km L)		
	BY-112-3, 0.8 mi WSW (1.2 km M)		
	BY-112-4, 0.8 mi WSW (1.2 km M)		

Table 11-1 (Cont.)

Radiological Environmental Monitoring Program

Exposure Pathway and/or Sample	Sampling or Monitoring Locations	Sampling or Collection Frequency	Type of Frequency of Analysis
2. Direct Radiation (Cont'd)	BY-113-1, 0.7 mi W (1.1 km N) BY-113-2, 0.7 mi W (1.1 km N) BY-114-1, 0.8 mi WNW (1.2 km P) BY-114-2, 0.8 mi WNW (1.3 km P) BY-115-1, 1.0 mi NW (1.6 km Q) BY-115-2, 1.0 mi NW (1.7 km Q) BY-116-1, 1.4 mi NNW (2.3 km R) BY-116-2, 1.4 mi NNW (2.3 km R)		
	b. Indicators-Outer Ring		
	BY-201-3, 4.5 mi N (7.1 km A) BY-201-4, 4.4 mi N (7.1 km A) BY-202-1, 4.3 mi NNE (6.9 km B) BY-202-2, 4.8 mi NNE (7.6 km B) BY-203-1, 4.8 mi NE (7.7 km C) BY-203-2, 4.7 mi NE (7.5 km C) BY-204-1, 4.2 mi ENE (6.6 km D) BY-204-2, 4.1 mi ENE (6.5 km D) BY-205-1, 3.8 mi E (6.2 km E) BY-205-2, 3.8 mi E (6.2 km E) BY-206-1, 4.1 mi ESE (6.5 km F) BY-206-2, 4.4 mi ESE (7.0 km F) BY-207-1, 4.2 mi SE (6.7 km G) BY-207-2, 3.6 mi SE (5.8 km G)		

Table 11-1 (Cont.)

Radiological Environmental Monitoring Program

Exposure Pathway and/or Sample	Sampling or Monitoring Locations	Sampling or Collection Frequency	Type of Frequency of Analysis
2. Direct Radiation (Cont'd)	BY-208-1, 4.0 mi SSE (6.4 km H) BY-208-2, 3.7 mi SSE (5.9 km H) BY-209-1, 3.7 mi S (5.9 km J) BY-209-4, 3.7 mi S (5.9 km J) BY-210-3, 3.9 mi SSW (6.2 km K) BY-210-4, 3.9 mi SSW (6.2 km K) BY-211-1, 4.9 mi SW (7.9 km L) BY-211-4, 4.9 mi SW (7.8 km L) BY-212-1, 4.7 mi WSW (7.4 km M) BY-212-4, 4.7 mi WSW (7.4 km M) BY-213-1, 4.7 mi W (7.5 km N) BY-213-4, 4.6 mi W (7.4 km N) BY-214-1, 4.6 mi WNW (7.4 km P) BY-214-4, 4.9 mi WNW (7.8 km P) BY-215-1, 5.3 mi NW (8.4 km Q) BY-215-4, 5.2 mi NW (8.3 km Q) BY-216-1, 4.6 mi NNW (7.3 km R) BY-216-2, 4.8 mi NNW (7.6 km R)		
	c. Indicators-Other One at each airborne location given in part 1.a and 1.b.		
	d. Control One at each airborne control location given in part 1.c.		

Table 11-1 (Cont.)
Radiological Environmental Monitoring Program

Exposure Pathway and/or Sample	Sampling or Monitoring Locations	Sampling or Collection Frequency	Type of Frequency of Analysis
3. Waterborne a. Ground/Well	a. Indicators BY-14, ComEd Offsite Well 0.5 mi ESE (0.7 km F) BY-18, McCoy Farmstead 0.7 mi SW (1.2 km L) BY-32, Wolford Well 1.8 mi W (2.9 km N)	Quarterly	Gamma isotopic[3] and tritium analysis quarterly.
b. Drinking	There is no drinking water pathway within 6.2 mi downstream of the station.		
c. Surface	BY-12, Oregon Pool of Rock River, Downstream of Discharge, 4.5 mi SSW (7.3 km K)	Weekly grab samples.	Gross beta and gamma isotopic analysis[3] on monthly composite; tritium analysis on quarterly composite.
d. Control	BY-29, Byron, Upstream of Intake 3.0 mi N (4.8 km A)	Weekly grab samples.	Gross beta and gamma isotopic analysis[3] on monthly composite; tritium analysis on quarterly composite.
e. Sediment	BY-12, Oregon Pool of Rock River, Downstream of Discharge, 4.5 mi SSW (7.3 km K)	Semiannually	Gamma isotopic[3] analysis semiannually.

Table 11-1 (Cont.)

Radiological Environmental Monitoring Program

Exposure Pathway and/or Sample	Sampling or Monitoring Locations	Sampling or Collection Frequency	Type of Frequency of Analysis
4. Ingestion			
a. Milk	a. Indicators BY-20, K. Reeverts Dairy Farm, 2.0 mi NE (3.2 km C) BY-30, Don Roos Dairy, 5.3 mi SE (8.4 km G)	Biweekly: May through October; monthly: November through April.	Gamma isotopic[3] and I-131 analysis[4] on each sample.
	b. Controls BY-26, Glen Gazzard's Dairy, 12.0 mi N (19.2 km A)		
b. Fish	a. Indicator BY-31, Rock River in vicinity of Discharge, 2.2 mi WNW (3.5 km P)	Two times annually	Gamma isotopic[3] analysis on edible portions.
	b. Control BY-29, Byron, Upstream of Intake 3.0 mi N (4.8 km A)		
c. Food Products	a. Indicators Two samples from each of the four major quadrants within 6.2 miles of the station.	Annually	Gamma isotopic[3] analysis on each sample.

Table 11-1 (Cont.)

Radiological Environmental Monitoring Program

Exposure Pathway and/or Sample	Sampling or Monitoring Locations	Sampling or Collection Frequency	Type of Frequency of Analysis
	Sample locations for food products may vary based on availability and therefore are not required to be identified here but shall be taken.		
	b. Control Two samples within 9.3 to 18.6 miles of the station.		

TABLE 11-1 (Cont'd)

Radiological Environmental Monitoring Program

[1]Far field samples are analyzed when the respective near field sample results are inconsistent with previous measurements and radioactivity is confirmed as having its origin in airborne effluents from the station, or at the discretion of the Radiation Protection Director.

[2]Airborne particulate sample filters shall be analyzed for gross beta radioactivity 24 hours or more after sampling to allow for radon and thoron daughter decay. If gross beta activity in air particulate samples is greater than ten times the yearly mean of control samples, gamma isotopic analysis shall be performed on the individual samples.

[3]Gamma isotopic analysis means the identification and quantification of gamma-emitting radionuclides that may be attributable to the effluents from the station.

[4]I-131 analysis means the analytical separation and counting procedure are specific for this radionuclide.

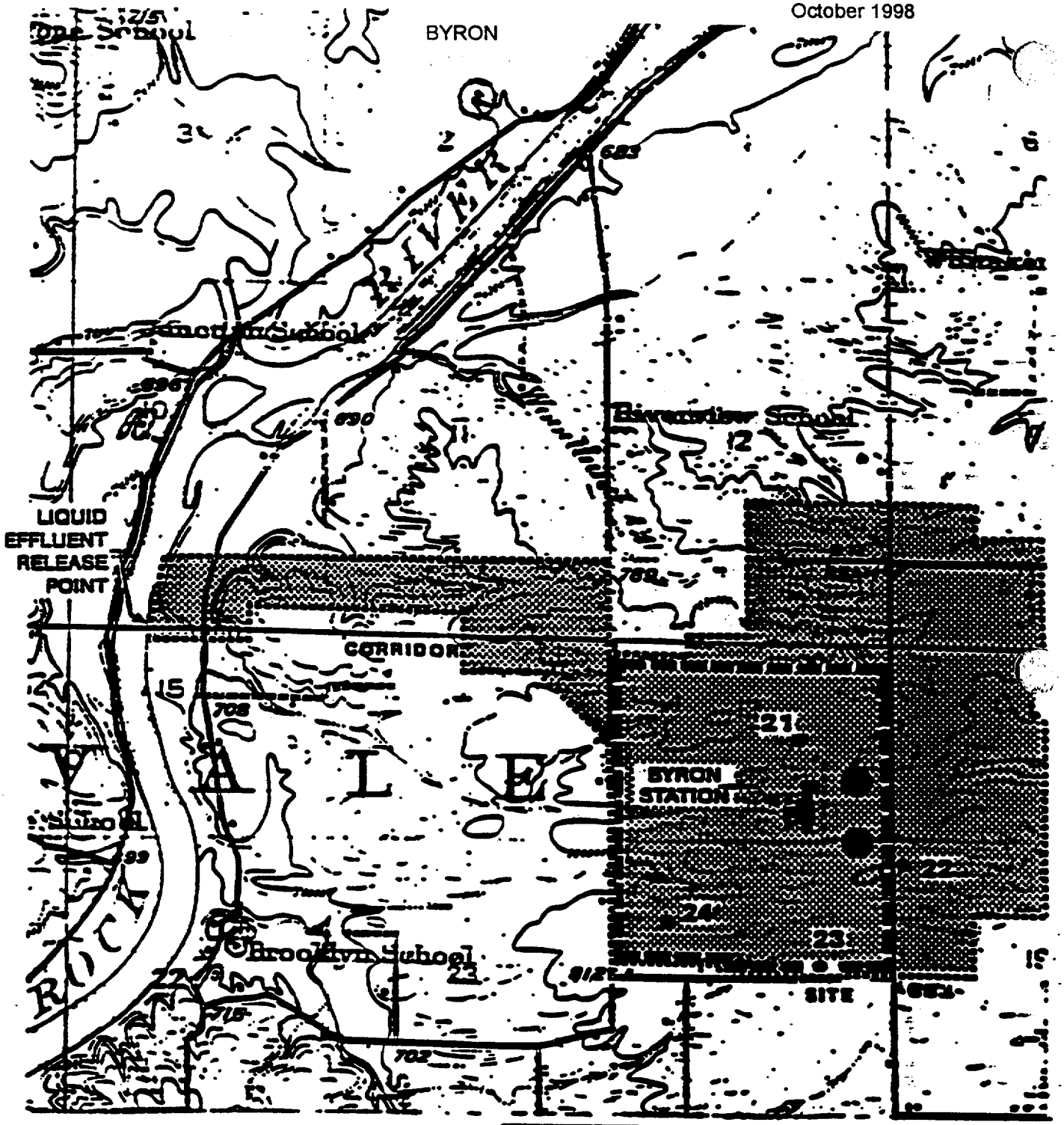

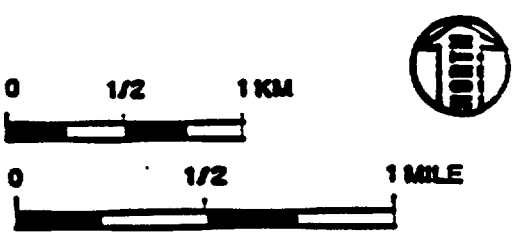

• Air Sampling Location

OFFSITE DOSE CALCULATION MANUAL
BYRON STATION

FIGURE 11-1

ONSITE AIR SAMPLING LOCATIONS

(p:\radprot\odcm\by11R1-6)

BYRON

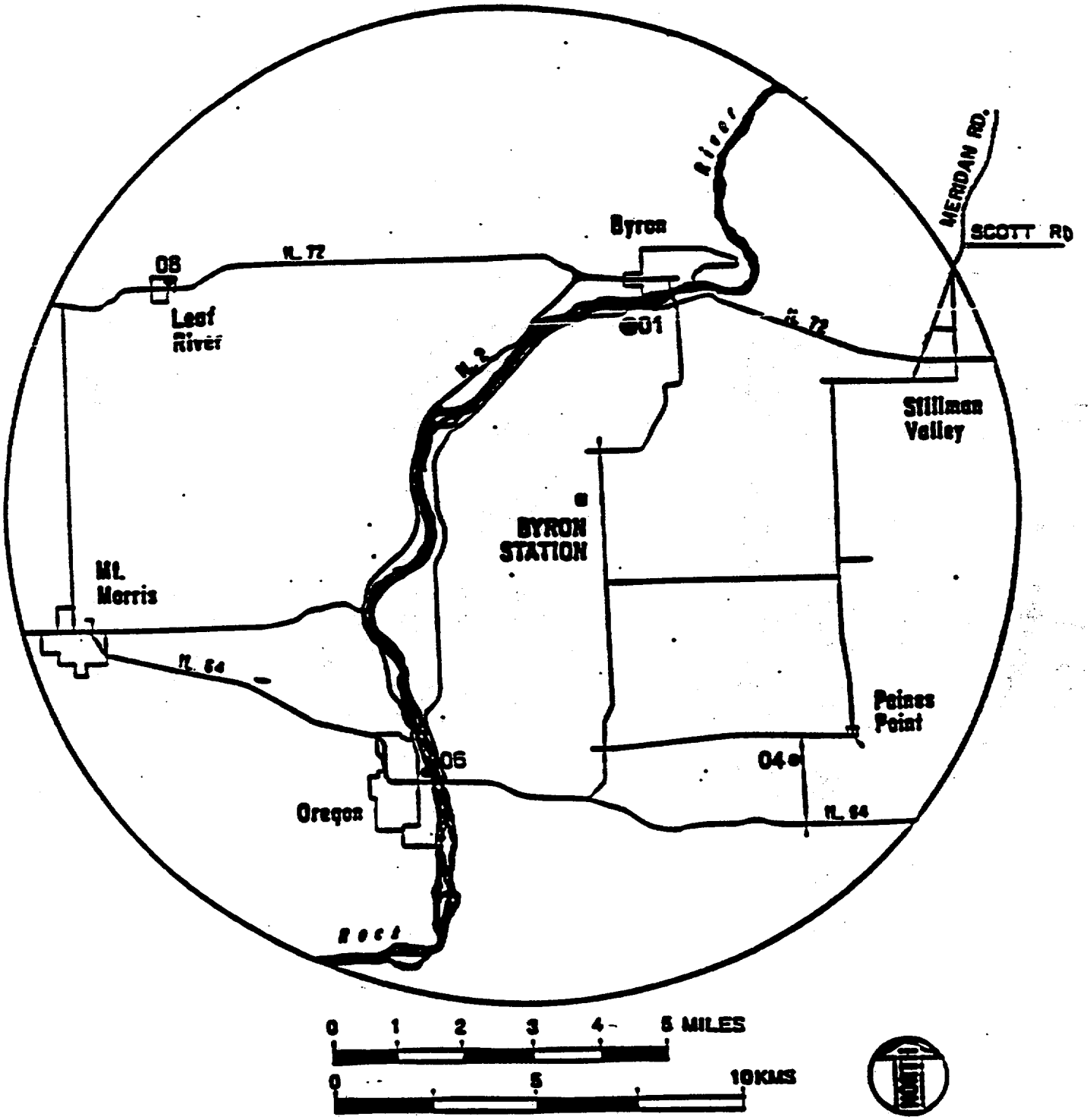

● Air Sampling Location

◥ Byron Station

(p:\radprot\odcm\by11R1-6)

OFFSITE DOSE CALCULATION MANUAL
BYRON STATION

FIGURE 11-2

OFFSITE AIR SAMPLING LOCATIONS

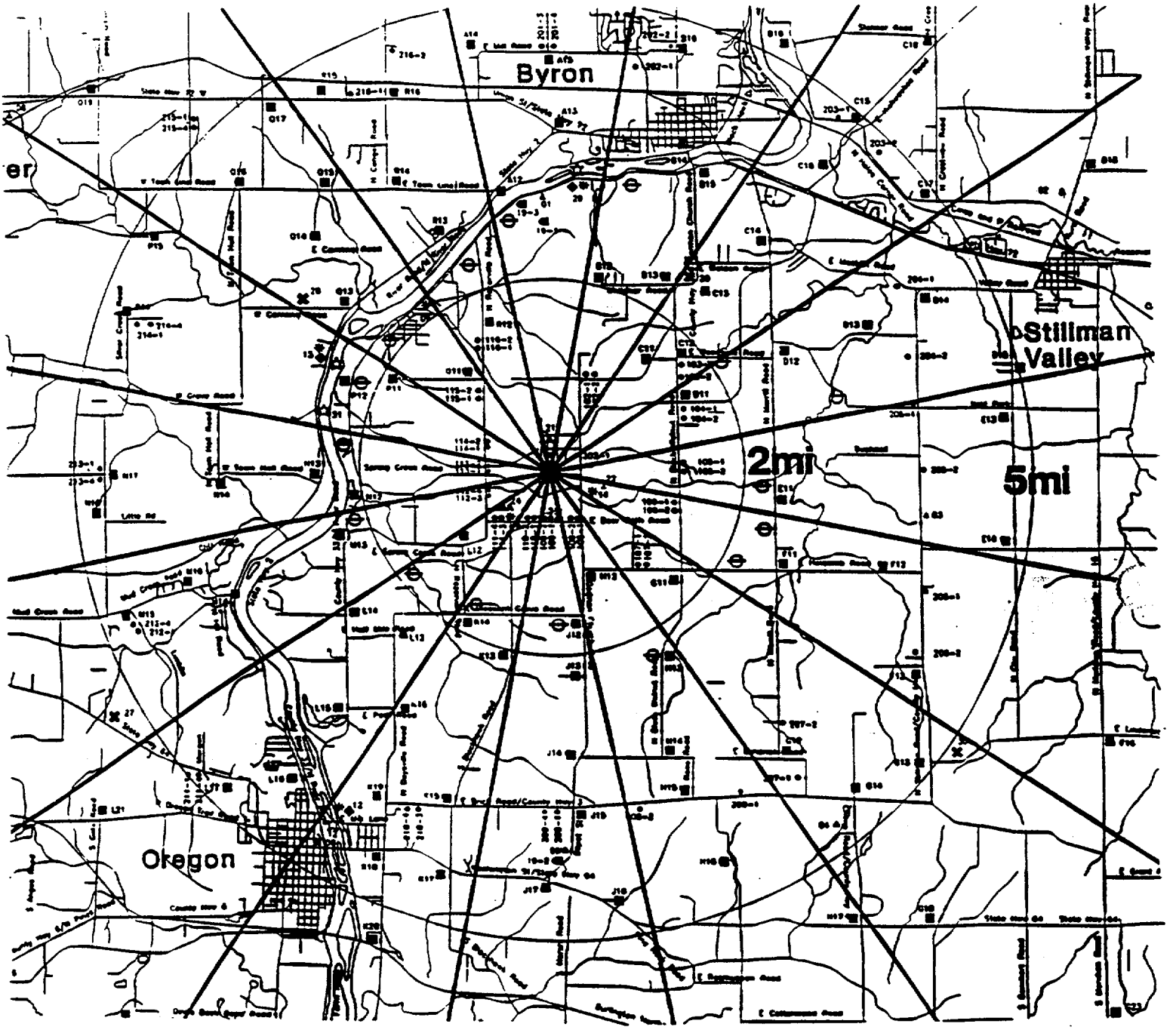

• TLD Location

N

OFFSITE DOSE CALCULATION MANUAL
BYRON STATION

FIGURE 11-3

INNER RING AND OUTER RING TLD LOCATIONS

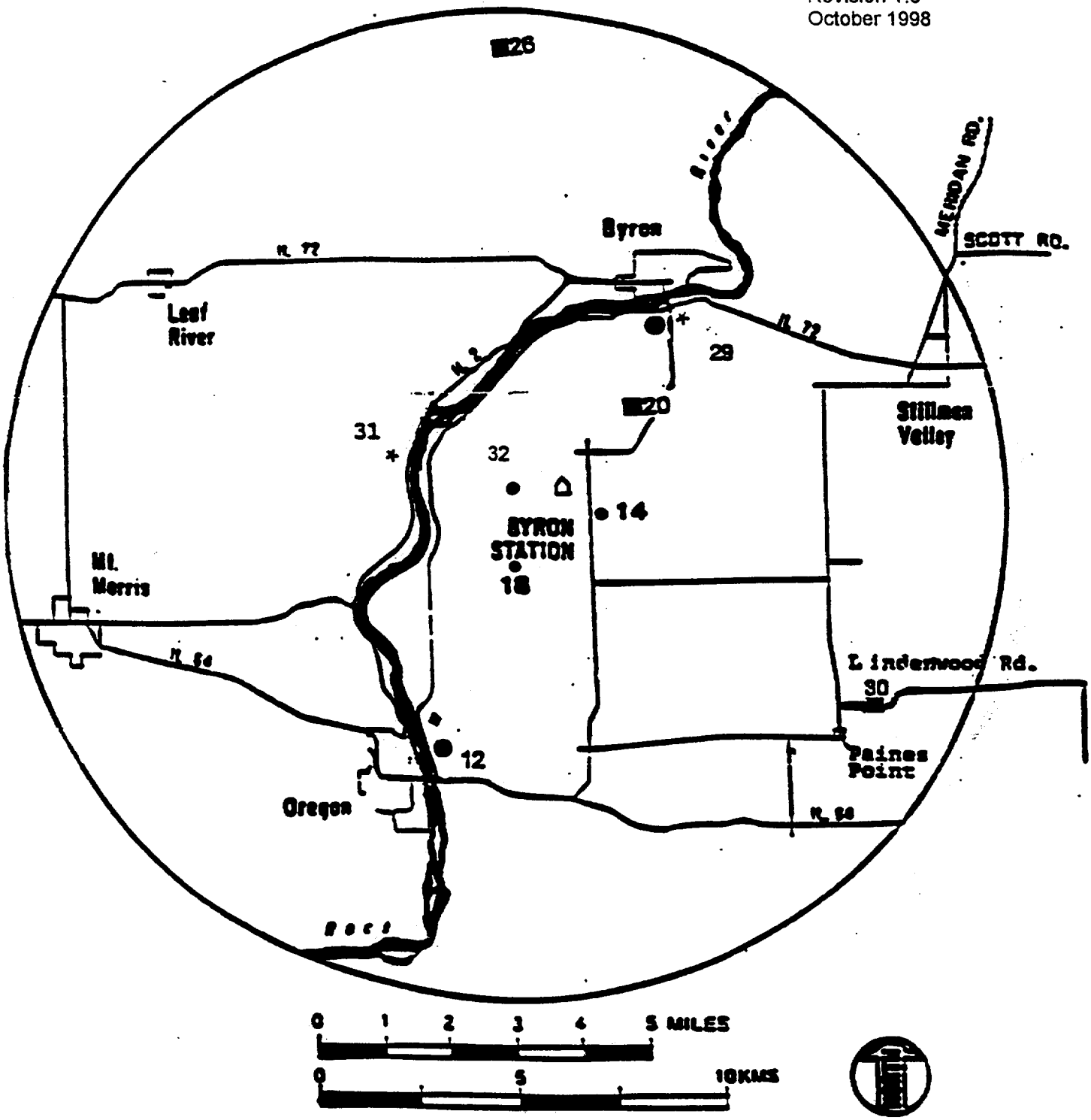

* Fish
■ Milk
◆ Sediment
● Water
△ Byron Station

OFFSITE DOSE CALCULATION MANUAL
BYRON STATION

FIGURE 11-4

INGESTION AND WATERBORNE EXPOSURE PATHWAY SAMPLE LOCATIONS

(p:\radprot\odcm\by11R1-6)

Byron Station
Chapter 12 Change Summary
ODCM Revision 1.6, January 1999

Page or Section	Change Description
12-ii	Updated revision number.
12iii-12iv	Updated page number references.
12-1	Change Tech Spec references from Current Tech Spec (CTS) to Improved Tech Spec (ITS).
12-2 thru 12-4	Updated Definitions to fully align with Improved Technical Specification and Technical Requirements Manual Definitions.
12-5	Changed bases reference from CTS to ITS.
12-6 thru 12-70	Format Changes. Format was updated to comply with ITS format, as documented in the Technical Requirements Manual Chapters 3.11 and 3.12.
12-50	Old Steam Generator Storage Facility (OSGSF) Surveillance broken apart into two separate actions. Surveillance had required initial survey of OSGSF, quarterly check of sump level, and requirement to remove water if identified. Initial Survey completed and within requirements, so it has been removed. Surveillance 12.4.5.B.3 now only requires a quarterly sump level check. New Surveillance (12.4.5.B.4) requires any water identified to be sampled and analyzed.
12-71	Annual Radiological Environmental Operating Report due date extended from May 1st to May 15th , as specified in ITS 5.6.2.
12-73	Technical Specification reference updated to reflect ITS.
12-74	Records Retention requirements removed from Tech Specs, and placed in UFSAR Chapter 17. Reference updated to reflect change.
	Reference to On-site review and investigative function removed, replaced with Independent Technical Review and PORC.
12-75	Reference to On-site review and investigative function removed, replaced with Independent Technical Review and PORC.

CHAPTER 12.0

SPECIAL NOTE

The transfer of the Byron Radiological Effluent Technical Specifications to the ODCM was approved by the Nuclear Regulatory Commission in Technical Specification Amendment 46, dated April 13, 1992.

BYRON ANNEX INDEX

CHAPTER 12

Revision 1.6

CHAPTER 12

RADIOACTIVE EFFLUENT TECHNICAL STANDARDS (RETS)
TABLE OF CONTENTS

		PAGE
12.1	**DEFINITIONS**	12-2
12.2	**INSTRUMENTATION**	12-6
1.	Radioactive Liquid Effluent Monitoring Instrumentation	12-6
2.	Radioactive Gaseous Effluent Monitoring Instrumentation	12-16
12.3	**RADIOLOGICAL EFFLUENTS - LIQUID**	12-25
1.	Concentration Limits for Effluents	12-25
2.	Dose From Liquid Effluents	12-31
3.	Liquid Radwaste Treatment System	12-33
12.4	**RADIOLOGICAL EFFLUENTS - GASEOUS**	12-36
1.	Dose Rate for Gaseous Effluents	12-36
2.	Dose - Noble Gases	12-41
3.	Dose - Iodine-131, Iodine-133, Tritium, and Radioactive Material in Particulate Form	12-43
4.	Gaseous Radwaste Treatment System	12-46
5.	Total Dose	12-49
12.5	**RADIOLOGICAL ENVIRONMENTAL MONITORING PROGRAM**	12-52
1.	Radiological Environmental Monitoring Program	12-52
2.	Land Use Census	12-66
3.	Interlaboratory Comparison Program	12-69
12.6	**REPORTING REQUIREMENTS**	12-71
1.	Annual Radiological Environmental Operating Report	12-71
2.	Annual Radioactive Effluent Release Report	12-73
3.	Offsite Dose Calculation Manual (ODCM)	12-74
4.	Major Changes to Liquid and Gaseous Radwaste Treatment Systems	12-75

CHAPTER 12

RADIOACTIVE EFFLUENT TECHNICAL STANDARDS (RETS)
LIST OF TABLES

TABLE	TITLE	PAGE
12.0-1	Compliance Matrix	12-1
12.1-1	Frequency Notations	12-5
12.2-1	Radioactive Liquid Effluent Monitoring Instrumentation	12-12
12.2-2	Radioactive Liquid Effluent Monitoring Instrumentation Surveillance Requirements	12-15
12.2-3	Radioactive Gaseous Effluent Monitoring Instrumentation	12-21
12.2-4	Radioactive Gaseous Effluent Monitoring Instrumentation Surveillance Requirements	12-24
12.3-1	Radioactive Liquid Waste Sampling and Analysis Program	12-27
12.4-1	Radioactive Gaseous Waste Sampling and Analysis Program	12-38
12.5-1	Radiological Environmental Monitoring Program	12-58
12.5-2	Reporting Levels for Radioactivity Concentrations in Environmental Samples	12-63
12.5-3	Detection Capabilities for Environmental Sample Analysis	12-64

BYRON STATION

Table 12.0-1

COMPLIANCE MATRIX

Regulation	Dose Component Limit	ODCM Equation	RETS	Technical Specification
10 CFR 50 Appendix I	1. Gamma air dose and beta air dose due to airborne radioactivity in effluent plume.	A-1 A-2	12.4.2	5.5.4.h
	a. Whole body and skin dose due to airborne radioactivity in effluent plume are reported only if certain gamma and beta air dose criteria are exceeded.	A-6 A-7	N/A	N/A
	2. CDE for all organs and all four age groups due to iodines and particulates in effluent plume. All pathways are considered.	A-13	12.4.3	5.5.4.i
	3. CDE for all organs and all four age groups due to radioactivity in liquid effluents.	A-29	12.3.2	5.5.4.d
10 CFR 20	1. TEDE, totaling all deep dose equivalent components (direct, ground and plume shine) and committed effective dose equivalents (all pathways, both airborne and liquid-borne). CDE evaluation is made for adult only using FGR 11 database.	A-38		5.5.4.c
40 CFR 190 (now by reference, also part of 10 CFR 20)	1. Whole body dose (DDE) due to direct dose, ground and plume shine from all sources at a station.	A-35	12.4.5	5.5.4.j
	2. Organ doses (CDE) to an adult due to all pathways.	A-13		
Technical Specifications	1. "Instantaneous" whole body (DDE), skin (SDE), and organ (CDE) dose rates to an adult due to radioactivity in airborne effluents. For the organ dose, only inhalation is considered.	A-8 A-9 A-28	12.4.1	5.5.4.g
	2. "Instantaneous" concentration limits for liquid effluents.	A-32	12.3.1	5.5.4.b

12.1 DEFINITIONS

12.1.1 ACTIONS shall be that part of a Specification that prescribes Required Actions to be taken under designated Conditions within specified Completion Times.

12.1.2 A CHANNEL CALIBRATION shall be the adjustment, as necessary, of the channel so that it responds within the required range and accuracy to known inputs. The CHANNEL CALIBRATION shall encompass the entire channel, including the required sensor, alarm, interlock, display, and trip functions. Calibration of instrument channels with Resistance Temperature Detector (RTD) or thermocouple sensors may consist of an in place qualitative assessment of sensor behavior and normal calibration of the remaining adjustable devices in the channel. The CHANNEL CALIBRATION may be performed by means of any series of sequential, overlapping calibrations or total channel steps so that the entire channel is calibrated.

12.1.3 A CHANNEL CHECK shall be the quantative assessment, by observation, of channel behavior during operation. This determination shall include, where possible, comparison of the channel indication and status to other indications or status derived from independent instrument channels measuring the same parameter.

12.1.4 A CHANNEL OERATIONAL TEST (COT) shall be the injection of a simulated or actual signal into the channel as close to the sensor as practicable to verify the OPERABILITY of required alarm, interlock, display and trip functions. The COT shall include adjustments, as necessary, of the required alarm, interlock, and trip setpoints so that the setpoints are within the required range and accuracy.

12.1.5 DOSE EQUIVALENT I-131 shall be that concentration of I-131 (microcuries/gram) that alone would produce the same thyroid dose as the quantity and isotopic mixture of I-131, I-132, I-133, I-134, and I-135 actually present. The thyroid dose conversion factors used for this calculation shall be those listed in Table III of TID-14844, AEC, 1962. "Calculation of Distance Factors for Power and Test Reactor Sites."

12.1.6 FREQUENCY - Table 12.1-1 provides the definitions of various frequencies for which surveillances, sampling, etc., are performed unless defined otherwise. The 25% variance shall not be applied to Operability Action statements. The bases to Improved Technical Specification 3.0.2 provide clarifications to this requirement.

12.1.7 MEMBER(S) OF THE PUBLIC shall include all persons who are not occupationally associated with the plant. This category does not include employees of the licensee, its contractors or vendors and persons who enter the site to service equipment or to make deliveries. This category does include persons who use portions of the site for recreational, occupational, or other purposes not associated with the plant.

12.1.8 A MODE shall correspond to any one inclusive combination of core reactivity condition, power level, average reactor coolant temperature, and reactor vessel head closure bolt tensioning specified in Table T1.1-1 with fuel in the reactor vessel.

12.1.9 OCCUPATIONAL DOSE means the dose received by an individual in the course of employment in which the individual's assigned duties involve exposure to radiation and/or to radioactive material from licensed and unlicensed sources of radiation, whether in the possession of the licensee or other person. Occupational dose does not include dose from background radiation, as a patient from medical practices, from voluntary participation in medical research programs, or as a member of the public.

12.1.10 A system, subsystem, train, component, or device shall be OPERABLE or have OPERABLITY when it is capable of performing its specified safety functions(s) and when all necessary attendant instrumentation, controls, normal or emergency electrical power, cooling and seal water, lubrication, and other auxiliary equipment that are required for the system, subsystem, train, component, or device to perform its specified safety function(s) are also capable of performing their related support function(s).

12.1.11 The PROCESS CONTROL PROGRAM (PCP) shall contain the current formulas, sampling, analyses, tests, and determinations to be made to ensure that processing and packaging of solid radioactive wastes based on demonstrated processing of actual or simulated wet solid wastes will be accomplished in such a way as to assure compliance with 10 CFR Parts 20, 61, and 71. State regulations, burial ground requirements, and other requirements governing the disposal of solid radioactive waste.

12.1.12 PURGE/PURGING shall be any controlled process of discharging air or gas from a confinement to maintain temperature, pressure, humidity, concentration or other operating condition, in such a manner that replacement air or gas is required to purify the confinement.

12.1.13 RATED THERMAL POWER shall be a total core heat transfer rate to the reactor coolant of 3411 MW_{th}.

12.1.14 The SITE BOUNDARY shall be that line beyond which the land is neither owned, nor leased, nor otherwise controlled by the licensee.

12.1.15 SOLIDIFICATION shall be the conversion of wet wastes into a form that meets shipping and burial ground requirements.

12.1.16 SOURCE CHECK shall be the qualitative assessment of channel response when the channel sensor is exposed to a source of increased radioactivity.

12.1.17 THERMAL POWER shall be the total reactor core heat transfer rate to the reactor coolant.

12.1.18 UNRESTRICTED AREA means an area, access to which is neither limited nor controlled by the licensee.

12.1.19 VENTILATION EXHAUST TREATMENT SYSTEM shall be any system designed and installed to reduce gaseous radioiodine or radioactive material in particulate form in effluents by passing ventilation or vent exhaust gases through charcoal adsorbers and/or HEPA filters for the purpose of removing iodines or particulates from the gaseous exhaust stream prior to the release to the environment. Such a system is not considered to have any effect on noble gas effluents. Engineered Safety Features Atmospheric Cleanup Systems are not considered to be VENTILATION EXHAUST TREATMENT SYSTEM components.

12.1.20 VENTING shall be any controlled process of discharging air or gas from a confinement to maintain temperature, pressure, humidity, concentration or other operating condition, in such a manner that replacement air or gas is not provided or required during VENTING. Vent, used in system names, does not imply a VENTING process.

12.1.21 WASTE GAS HOLDUP SYSTEM shall be any system designed and installed to reduce radioactive gaseous effluents by collecting Reactor Coolant System off-gases from the Reactor Coolant System and providing for delay or holdup for the purpose of reducing the total radioactivity prior to release to the environment.

12.1.22 Definitions Peculiar to Estimating Dose to Members of the Public using the ODCM Computer Program.

a. ACTUAL - ACTUAL refers to using known release data to project the dose to members of the public for the previous time period. This data is stored in the database and used to demonstrate compliance with the reporting requirements of Chapter 12.

b. PROJECTED - PROJECTED refers to using known release data from the previous time period or estimated release data to forecast a future dose to members of the public. This data is not incorporated into the database.

TABLE 12.1-1

FREQUENCY NOTATIONS*

Notation	Frequency
S - Shiftly	At least once per 12 hours
D - Daily	At least once per 24 hours
W - Weekly	At least once per 7 days
M - Monthly	At least once per 31 days
Q - Quarterly	At least once per 92 days
SA - Semiannually	At least once per 184 days
A - Annually	At least once per 366 days
R - Refuel Cycle	At least once per 18 months
S/U - Startup	Prior to each reactor startup
N.A.	Not applicable
P - Prior	Prior to each radioactive release

*Each frequency requirement shall be performed within the specified time interval with the maximum allowable extension not to exceed 25% of the frequency interval. The 25% variance shall not be applied to Operability Action statements. The bases to ITS 3.0.2 provide clarifications to this requirement. These frequency notations do not apply to the Radiological Environmental Monitoring Program as described in Section 12.5.

12.2 INSTRUMENTATION

12.2.1 Radioactive Liquid Effluent Monitoring Instrumentation

12.2.1.A All radioactive liquid effluent monitoring instrumentation channels shown in Table 12.2-1 shall be OPERABLE.

APPLICABILITY: At all times.

ACTIONS:

NOTES

1. Separate Condition entry is allowed for each channel.
2. All samples are to be analyzed for radioactivity at a lower limit of detection as specified in Table 12.3-1.
3. TLCO 3.0.c is not applicable.
4. TLCO 3.0.d is not applicable.

CONDITION	REQUIRED ACTION	COMPLETION TIME
A. One or more radioactive liquid effluent monitoring instrumentation channel Alarm/Trip Setpoint less conservative than required.	A.1 Suspend the release of radioactive liquid effluent monitored by the affected channel.	Immediately
	OR	
	A.2 Declare the channel inoperable.	Immediately
B. Less than the required radioactive liquid effluent monitoring instrumentation channels OPERABLE.	B.1 Enter the Condition referenced in Table 12.2-1 for the affected channel(s).	Immediately

(continued)

ACTIONS (continued)

CONDITION	REQUIRED ACTION	COMPLETION TIME
C. As required by Required Action B.1 and referenced by Table 12.2-1.	C.1 Verify at least two independent samples are analyzed.	Prior to initiating a release
	AND	
	C.2 Verify at least two technically qualified members of the facility staff independently verify the release rate calculations.	Prior to initiating a release
	AND	
	C.3 Verify at least two technically qualified members of the facility staff independently verify the discharge line valving.	Prior to initiating a release
	AND	
	C.4.1 Restore the required number of channels to OPERABLE.	14 days
	OR	
	C.4.2 Supplement the Radioactive Effluent Release Report pursuant to Technical Specification 5.6.3 with the cause for failure to correct inoperability.	12 months

(continued)

ACTIONS (continued)

CONDITION	REQUIRED ACTION		COMPLETION TIME
D. As required by Required Action B.1 and referenced by Table 12.2-1.	D.1	Verify grab samples are collected and analyzed.	Every 12 hours
	AND		
	D.2.1	Restore the required number of channels to OPERABLE.	30 days
	OR		
	D.2.2	Supplement the Radioactive Effluent Release Report pursuant to Technical Specification 5.6.3 with the cause for failure to correct inoperability	12 months

(continued)

ACTIONS (continued)

CONDITION	REQUIRED ACTION		COMPLETION TIME
E. As required by Required Action B.1 and referenced by Table 12.2-1.	E.1	-------NOTES------- 1. Pump performance curves generated in place may be used to estimate flow. 2. Only required to be performed during actual releases. ----------	
		Estimate flow rate.	Every 4 hours
	AND		
	E.2.1	Restore the required number of channels to OPERABLE.	30 days
	OR		
	E.2.2	Supplement the Radioactive Effluent Release Report pursuant to Technical Specification 5.6.3 with the cause for failure to correct inoperability.	12 months

(continued)

ACTIONS (continued)

CONDITION	REQUIRED ACTION	COMPLETION TIME
F. As required by Required Action B.1 and referenced by Table 12.2-1.	F.1.1 -------NOTE------- Only required to be performed when the specific activity of the secondary activity of the secondary coolant is >0.01 μCi/gm DOSE EQUIVALENT I-131. ----------	
	Verify grab samples are collected and analyzed.	Every 12 hours
	OR	
	F.1.2 -------NOTE--------- Only required to be performed when the specific activity of the secondary coolant is ≤0.01 μCi/gm DOSE EQUIVALENT I-131. ----------	
	Verify grab samples are collected and analyzed.	Every 24 hours
	AND	
	F.2.1 Restore the required number of channels to OPERABLE.	30 days
	OR	
	F.2.2 Supplement the Radioactive Effluent Release Report Pursuant to Technical Specification 5.6.3 with the cause for failure to correct inoperability.	12 months

(continued)

ACTIONS (continued)

CONDITION	REQUIRED ACTION	COMPLETION TIME
G. As required by Required Action B.1 and referenced by Table 12.2-1.	G.1 Verify liquid grab samples are collected and analyzed.	Every 12 hours
	AND	
	G.2.1 Restore the required number of channels to OPERABLE.	30 days
	OR	
	G.2.2 Supplement the Radioactive Effluent Release Report pursuant to Technical Specification 5.6.3 with the cause for failure to correct inoperability.	12 months
H. Required Action and associated Completion Time for Conditions C, D, E, F, or G not met.	H.1 Suspend the release of radioactive liquid effluent monitored by the affected channel.	Immediately

Table 12.2-1 (Page 1 of 3)
Radioactive Liquid Effluent Monitoring Instrumentation

	INSTRUMENT	REQUIRED CHANNELS	CONDITION	SURVEILLANCE REQUIREMENTS
1.	Radioactivity Monitors Providing Alarm and Automatic Termination of Release			
a.	Liquid Radwaste Effluent Line (0RE-PR001)	1	C	12.2.1.B.1 12.2.1.B.3[a] 12.2.1.B.4[c] 12.2.1.B.5
b.	Fire and Oil Sump (0RE-PR005)	1	F	12.2.1.B.1 12.2.1.B.2 12.2.1.B.3[a] 12.2.1.B.4[c]
c.	Condensate Polisher Sump Discharge (0RE-PR041)	1	F	12.2.1.B.1 12.2.1.B.2 12.2.1.B.3[a] 12.2.1.B.4[c]

(continued)

(a) The CHANNEL OPERATIONAL TEST shall also demonstrate that automatic isolation of this pathway and control room alarm annunciation occur if any of the following conditions exists:

1. Instrument indicates measured levels above the Alarm/Trip Setpoint, or
2. Circuit failure (monitor loss of communications - alarm only, detector loss of counts, or monitor loss of power), or
3. Detector check source test failure, or
4. Detector channel out-of-service, or
5. Monitor loss of sample flow.

(c) The initial CHANNEL CALIBRATION shall be performed using one or more of the reference standards certified by the National Bureau of Standards (NBS) or using standards that have been obtained from suppliers that participate in measurement assurance activities with NBS. These standards shall permit calibrating the system over its intended range of energy and measurement range. For subsequent CHANNEL CALIBRATION, sources that have been related to the initial calibration shall be used.

Table 12.2-1 (Page 2 of 3)
Radioactive Liquid Effluent Monitoring Instrumentation

INSTRUMENT	REQUIRED CHANNELS	CONDITION	SURVEILLANCE REQUIREMENTS
2. Radioactivity Monitors Providing Alarm But Not Providing Automatic Termination of Release			
a. Essential Service Water			
1). Unit 1			
a). RCFC 1A and 1C Outlet (1RE-PR002)	1	D	12.2.1.B.1 12.2.1.B.2 12.2.1.B.3(b) 12.2.1.B.4(c)
b). RCFC 1B and 1D Outlet (1RE-PR003)	1	D	12.2.1.B.1 12.2.1.B.2 12.2.1.B.3(b) 12.2.1.B.4(c)
2). Unit 2			
a). RCFC 2A and 2C Outlet (2RE-PR002)	1	D	12.2.1.B.1 12.2.1.B.2 12.2.1.B.3(b) 12.2.1.B.4(c)
b). RCFC 2B and 2D Outlet (2RE-PR003)	1	D	12.2.1.B.1 12.2.1.B.2 12.2.1.B.3(b) 12.2.1.B.4 (c)
b. Station Blowdown Line (0RE-PR010)	1	D	12.2.1.B.1 12.2.1.B.2 12.2.1.B.3(b) 12.2.1.B.4(c)

(continued)

(b) The CHANNEL OPERATIONAL TEST shall also demonstrate that control room alarm annunciation occurs if any of the following conditions exists:

1. Instrument indicates measured levels above the Alarm Setpoint, or
2. Circuit failure (monitor loss of communications - alarm only, detector loss of counts, or monitor loss of power), or
3. Detector check source test failure, or
4. Detector channel out-of-service, or
5. Monitor loss of sample flow.

(c) The initial CHANNEL CALIBRATION shall be performed using one or more of the reference standards certified by the National Bureau of Standards (NBS) or using standards that have been obtained from suppliers that participate in measurement assurance activities with NBS. These standards shall permit calibrating the system over its intended range of energy and measurement range. For subsequent CHANNEL CALIBRATION, sources that have been related to the initial calibration shall be used.

Table 12.2-1 (Page 3 of 3)
Radioactive Liquid Effluent Monitoring Instrumentation

INSTRUMENT	REQUIRED CHANNELS	CONDITION	SURVEILLANCE REQUIREMENTS
3. Flow Rate Measurement Devices			
a. Liquid Radwaste Effluent Line (Loop-WX001)	1	E	12.2.1.B.1[d] 12.2.1.B.3 12.2.1.B.4
b. Liquid Radwaste Effluent Line (Loop-WX630)	1	E	12.2.1.B.1[d] 12.2.1.B.3 12.2.1.B.4
c. Station Blowdown Line (Loop-CW032)	1	E	12.2.1.B.1[d] 12.2.1.B.3 12.2.1.B.4
4. Radioactivity Monitors Providing Alarm and Automatic Closure of Surge Tank Vent Component Cooling Water Line	2	G	12.2.1.B.1 12.2.1.B.2 12.2.1.B.3[a] 12.2.1.B.4[c]
a. (0RE-PR009 and 1/2RE-PR009)			

(a) The CHANNEL OPERATIONAL TEST shall also demonstrate that automatic isolation of this pathway and control room alarm annunciation occur if any of the following conditions exist:

1. Instrument indicates measured levels above the Alarm/Trip Setpoint, or
2. Circuit failure (monitor loss of communications - alarm only, detector loss of counts, or monitor loss of power), or
3. Detector check source test failure, or
4. Detector channel out-of-service, or
5. Monitor loss of sample flow.

(c) The initial CHANNEL CALIBRATION shall be performed using one or more of the reference standards certified by the National Bureau of Standards (NBS) or using standards that have been obtained from suppliers that participate in measurement assurance activities with NBS. These standards shall permit calibrating the system over its intended range of energy and measurement range. For subsequent CHANNEL CALIBRATION, sources that have been related to the initial calibration shall be used.

(d) CHANNEL CHECK shall consist of verifying indication of flow during periods of release. CHANNEL CHECK shall be made at least once per 24 hours on days on which continuous, periodic, or batch releases are made.

Table 12.2-2

SURVEILLANCE REQUIREMENTS

NOTES

1. Refer to Table 12.2-1 to determine which Surveillance Requirements apply to each instrument.

2. Alarm/Trip Setpoints shall be set to ensure that the limits of Requirement 12.3.1.A are not exceeded. The Alarm/Trip Setpoints of these channels shall be determined and adjusted in accordance with the methodology and parameters in the OFFSITE DOSE CALCULATION MANUAL (ODCM).

SURVEILLANCE		FREQUENCY
12.2.1.B.1	Perform a CHANNEL CHECK.	24 hours
12.2.1.B.2	Perform a SOURCE CHECK.	31 days
12.2.1.B.3	Perform a CHANNEL OPERATIONAL TEST.	92 days
12.2.1.B.4	Perform a CHANNEL CALIBRATION.	18 months
12.2.1.B.5	Perform a SOURCE CHECK.	Prior to each release

12.2 INSTRUMENTATION

12.2.2 Radioactive Gaseous Effluent Monitoring Instrumentation

12.2.2.A All radioactive gaseous effluent monitoring instrumentation channels shown in Table 12.2-3 shall be OPERABLE.

APPLICABILITY: At all times.

ACTIONS

NOTES

1. Separate Condition entry is allowed for each channel.
2. TLCO 3.0.c is not applicable.
3. TLCO 3.o.d is not applicable.

CONDITION	REQUIRED ACTION	COMPLETION TIME
A. One or more gaseous effluent monitoring instrumentation channel Alarm/Trip Setpoint(s) less conservative than required.	A.1 Suspend the release of radioactive gaseous effluent monitored by the affected channel.	Immediately
	OR	
	A.2 Declare the channel inoperable.	Immediately
B. Less than the required radioactive gaseous effluent monitoring instrumentation channels OPERABLE.	B.1 Enter the Condition Referenced in Table 12.2-3 for the affected channel(s).	Immediately

(continued)

ACTIONS (continued)

CONDITION	REQUIRED ACTION		COMPLETION TIME
C. As required by Required Action B.1 and referenced by Table 12.2-3.	C.1	Verify at least two independent samples of the tank's contents are analyzed.	Prior to initiating a release
	AND		
	C.2	Verify at least two technically qualified members of the facility staff independently verify the release rate calculations.	Prior to initiating a release
	AND		
	C.3	Verify at least two technically qualified members of the facility staff independently verify the discharge valve lineup.	Prior to initiating a release
	AND		
	C.4.1	Restore the require number of channels to OPERABLE.	14 days
	OR		
	C.4.2	Supplement the Radioactive Effluent Release Report pursuant to Technical Specification 5.6.3 with the cause for failure to correct the inoperabililty.	12 months

(continued)

ACTIONS (continued)

CONDITION	REQUIRED ACTION	COMPLETION TIME
D. As required by Required Action B.1 and referenced by Table 12.2-3.	D.1.1 Suspend PURGING via this pathway.	Immediately
	OR	
	D.1.2 Verify real time monitoring of radioactive effluents released via this pathway.	During release
	AND	
	D.2.1 Restore the required number of channels to OPERABLE.	7 days
	OR	
	D.2.2 Supplement the Radioactive Effluent Release Report pursuant to Technical Specification 5.6.3 with the cause for failure to correct the inoperability.	12 months

(continued)

ACTIONS (continued)

CONDITION	REQUIRED ACTION	COMPLETION TIME
E. As required by Required Action B.1 and referenced by Table 12.2-3.	E.1 Estimate flow rate.	Every 4 hours
	AND	
	E.2.1 Restore the required number of channels to OPERABLE.	30 days
	OR	
	E.2.2 Supplement the Radioactive Effluent Release Report pursuant to Technical Specification 5.6.3 with the cause for failure to correct the inoperability.	12 months
F. As required by Required Action B.1 and referenced by Table 12.2-3.	F.1 Verify samples are continuously collected with auxiliary sampling equipment as required by Table 12.4-1.	During release
	AND	
	F.2.1 Restore the required Number of Channels to OPERABLE.	30 days
	OR	
	F.2.2 Supplement the Radioactive Effluent Release Report pursuant to Technical Specification 5.6.3 with the cause for failure to correct the inoperability.	12 months

(continued)

ACTIONS (continued)

CONDITION	REQUIRED ACTION	COMPLETION TIME
G. As required by Required Action B.1 and referenced by Table 12.2-3.	G.1 Verify gaseous grab samples are collected and analyzed for principle gamma emitters at a Lower Limit of Detection (LLD) as specified in OFFSITE DOSE CALCULATION MANUAL (ODCM) Table 12.4.-1.	Every 12 hours
	AND	
	G.2.1 Restore the required number of channels to OPERABLE.	30 days
	OR	
	G.2.2 Supplement the Radioactive Effluent Release Report pursuant to Technical Specification 5.6.3 with the cause for failure to correct the inoperability.	12 months
H. Required Action and associated Completion Time for Conditions C, D, E, F, or G not met.	H.1 Suspend the release of radioactive gaseous effluent monitored by the affected channel.	Immediately

Table 12.2-3 (Page 1 of 3)
Radioactive Gaseous Effluent Monitoring Instrumentation

INSTRUMENT	REQUIRED CHANNELS	CONDITION	SURVEILLANCE REQUIREMENTS
U-1 Plant Vent Monitoring System			
1. Noble Gas Activity Monitor – Providing Alarm			
a. High Range (1RE-PR028D)	1	G	12.2.2.B.1 12.2.2.B.2 12.2.2.B.3(b) 12.2.2.B.4(c)
b. Low Range (1RE-PR028B)	1	G	12.2.2.B.1 12.2.2.B.2 12.2.2.B.3(b) 12.2.2.B.4(c)
c. Iodine Sampler (1RE-PR028C)	1	F	12.2.2.B.1 12.2.2.B.2 12.2.2.B.3(b) 12.2.2.B.4(c)
d. Particulate Sampler (1RE-PR028A)	1	F	12.2.2.B.1 12.2.2.B.2 12.2.2.B.3(b) 12.2.2.B.4(c)
e. Effluent System Flow Rate Measuring Device (LOOP-VA019)	1	E	12.2.2.B.1 12.2.2.B.3 12.2.2.B.4
f. Sampler Flow Rate Measuring Device (1FT-PR165)	1	E	12.2.2.B.1 12.2.2.B.3 12.2.2.B.4

(continued)

(b) The CHANNEL OPERATIONAL TEST shall also demonstrate that control room alarm annunciation occurs if any of the following conditions exists:

1. Instrument indicates measured levels above the Alarm Setpoint, or
2. Circuit failure (monitor loss of communications - alarm only, detector loss of counts, or monitor loss of power), or
3. Detector check source test failure, or
4. Detector channel out-of-service, or
5. Monitor loss of sample flow.

(c) The initial CHANNEL CALIBRATION shall be performed using one or more of the reference standards certified by the National Bureau of Standards (NBS) or using standards that have been obtained from suppliers that participate in measurement assurance activities with NBS. These standards shall permit calibrating the system over its intended range of energy and measurement range. For subsequent CHANNEL CALIBRATION, sources that have been related to the initial calibration shall be used.

Table 12.2-3 (Page 2 of 3)
Radioactive Gaseous Effluent Monitoring Instrumentation

INSTRUMENT	REQUIRED CHANNELS	CONDITION	SURVEILLANCE REQUIREMENTS
U-2 Plant Vent Monitoring System			
2. Noble Gas Activity Monitor - Providing Alarm			
a. High Range (2RE-PR028D)	1	G	12.2.2.B.1 12.2.2.B.2 12.2.2.B.3(b) 12.2.2.B.4(c)
b. Low Range (2RE-PR028B)	1	G	12.2.2.B.1 12.2.2.B.2 12.2.2.B.3(b) 12.2.2.B.4(c)
c. Iodine Sampler (2RE-PR028C)	1	F	12.2.2.B.1 12.2.2.B.2 12.2.2.B.3(b) 12.2.2.B.4(c)
d. Particulate Sampler (2RE-PR028A)	1	F	12.2.2.B.1 12.2.2.B.2 12.2.2.B.3(b) 12.2.2.B.4(c)
e. Effluent System Flow Rate Measuring Device (LOOP-VA020)	1	E	12.2.2.B.1 12.2.2.B.3 12.2.2.B.4
f. Sampler Flow Rate Measuring Device (2FT-PR165)	1	E	12.2.2.B.1 12.2.2.B.3 12.2.2.B.4
3. Refer to Technical Requirements Manual 3.3.e for Gaseous Waste Management Explosive Gas Monitoring Instrumentation			

(continued)

(b) The CHANNEL OPERATIONAL TEST shall also demonstrate that control room alarm annunciation occurs if any of the following conditions exists:

1. Instrument indicates measured levels above the Alarm Setpoint, or
2. Circuit failure (monitor loss of communications - alarm only, detector loss of counts, or monitor loss of power), or
3. Detector check source test failure, or
4. Detector channel out-of-service, or
5. Monitor loss of sample flow.

(c) The initial CHANNEL CALIBRATION shall be performed using one or more of the reference standards certified by the National Bureau of Standards (NBS) or using standards that have been obtained from suppliers that participate in measurement assurance activities with NBS. These standards shall permit calibrating the system over its intended range of energy and measurement range. For subsequent CHANNEL CALIBRATION, sources that have been related to the initial calibration shall be used.

Table 12.2-3 (Page 3 of 3)
Radioactive Gaseous Effluent Monitoring Instrumentation

	INSTRUMENT	REQUIRED CHANNELS	CONDITION	SURVEILLANCE REQUIREMENTS
4.	Gas Decay Tank System			
	Noble Gas Activity Monitor - Providing Alarm and Automatic Termination of Release (0RE-PR002A and 2B)	2	C	12.2.2.B.3(a) 12.2.2.B.4(c) 12.2.2.B.5 12.2.2.B.6
5.	Containment Purge System	1	D	12.2.2.B.1 12.2.2.B.3(b) 12.2.2.B.4(c) 12.2.2.B.6
	a. Noble Gas Activity Monitor Providing Alarm (1/2RE-PR001B)			
	b. Iodine Sampler (1/2RE-PR001C)	1	F	12.2.2.B.4(c) 12.2.2.B.5 12.2.2.B.6
	c. Particulate Sampler (1/2RE-PR001A)	1	F	12.2.2.B.4(c) 12.2.2.B.5 12.2.2.B.6

(a) The CHANNEL OPERATIONAL TEST shall also demonstrate that automatic isolation of this pathway and control room alarm annunciation occur if any of the following conditions exists:

1. Instrument indicates measured levels above the Alarm/Trip Setpoint, or
2. Circuit failure (monitor loss of communications - alarm only, detector loss of counts, or monitor loss of power), or
3. Detector check source test failure, or
4. Detector channel out-of-service, or
5. Monitor loss of sample flow.

(b) The CHANNEL OPERATIONAL TEST shall also demonstrate that control room alarm annunciation occurs if any of the following conditions exists:

1. Instrument indicates measured levels above the Alarm Setpoint, or
2. Circuit failure (monitor loss of communications - alarm only, detector loss of counts, or monitor loss of power), or
3. Detector check source test failure, or
4. Detector channel out-of-service, or
5. Monitor loss of sample flow.

(c) The initial CHANNEL CALIBRATION shall be performed using one or more of the reference standards certified by the National Bureau of Standards (NBS) or using standards that have been obtained from suppliers that participate in measurement assurance activities with NBS. These standards shall permit calibrating the system over its intended range of energy and measurement range. For subsequent CHANNEL CALIBRATION, sources that have been related to the initial calibration shall be used.

Table 12.2-4

SURVEILLANCE REQUIREMENTS

NOTES

1. Refer to Table 12.2-3 to determine which Surveillance Requirements apply to each instrument.

2. Alarm/Trip Setpoints shall be set to ensure that the limits of 12.4.1.A and Technical Specification 5.5.12 are not exceeded. The Alarm/Trip Setpoints of these channels meeting 12.4.1.A shall be determined and adjusted in accordance with the methodology and parameters in the OFFSITE DOSE CALCULATION MANUAL (ODCM).

SURVEILLANCE		FREQUENCY
12.2.2.B.1	Perform a CHANNEL CHECK.	24 hours
12.2.2.B.2	Perform a SOURCE CHECK.	31 days
12.2.2.B.3	Perform a CHANNEL OPERATIONAL TEST.	92 days
12.2.2.B.4	Perform a CHANNEL CALIBRATION.	18 months
12.2.2.B.5	Perform a CHANNEL CHECK.	Prior to each release
12.2.2.B.6	Perform a SOURCE CHECK.	Prior to each release

12.3 RADIOLOGICAL EFFLUENTS (RE) - LIQUID

12.3.1 Concentration Limits for Effluents

12.3.1.A The concentration of radioactive material released in liquid effluents to UNRESTRICTED AREAS (see Byron Station OFFSITE DOSE CALCULATION MANUAL (ODCM) Annex, Appendix F, Figure F-1) shall be limited to 10 times the concentrations specified in 10 CFR Part 20, Appendix B, Table 2, Column 2, for radionuclides other than dissolved or entrained noble gases. For dissolved or entrained noble gases, the concentration shall be limited to 2×10^{-4} μCi/ml total activity.

APPLICABILITY: At all times.

ACTIONS

NOTES

1. Separate Condition entry is allowed for each release.
2. TLCO 3.0.c is not applicable.
3. TLCO 3.0.d is not applicable.

CONDITION	REQUIRED ACTION		COMPLETION TIME
A. Concentration of radioactive material released exceeding limit.	A.1	Restore the concentration within the limit.	Immediately
	OR		
	A.2	Terminate the release.	Immediately

SURVEILLANCE REQUIREMENTS

NOTES

1. All Surveillance Requirements to be performed at frequency defined by Table 12.3-1.

2. The results of the radioactivity analysis shall be used in accordance with the methodology and parameters in the ODCM to assure that the concentrations at the point of release are maintained within the limits of 12.3.1.A.

SURVEILLANCE		FREQUENCY
12.3.1.B	Sample and analyze liquid wastes.	Per Table 12.3-1

Table 12.3-1 (Page 1 of 4)
Radioactive Liquid Waste Sampling and Analysis Program

LIQUID RELEASE TYPE	SAMPLING FREQUENCY	MINIMUM ANALYSIS FREQUENCY	TYPE OF ACTIVITY ANALYSIS	LOWER LIMIT OF DETECTION (LLD) (μCi/ml) (Refer to Note 1, Page 12-30)
1. Batch Release Tanks (a)	P Each Batch	P Each Batch	Principal Gamma Emitters (b)	5×10^{-7}
			I-131	1×10^{-6}
	P One Batch/M	M	Dissolved and Entrained Gases (Gamma Emitters)	1×10^{-5}
	P Each Batch	M Composite(c)	H-3	1×10^{-5}
	P Each Batch	Q Composite(c)	Gross Alpha	1×10^{-7}
			Sr-89, Sr-90	5×10^{-8}
			Fe-55	1×10^{-6}

(continued)

(a) A batch release is the discharge of liquid wastes of a discrete volume. Prior to sampling for analyses, each batch shall be isolated, and then thoroughly mixed by a method described in the ODCM to assure representative sampling.

(b) The principal gamma emitters for which the LLD specification applies include the following radionuclides: Mn-54, Fe-59, Co-58, Co-60, Zn-65, Mo-99, Cs-134, Cs-137, Ce-141, and Ce-144. This list does not mean that only these nuclides are to be considered. Other gamma peaks that are identifiable, together with those of the above nuclides, shall also be analyzed and reported in the Radioactive Effluent Release Report pursuant to Specification 5.6.3 in the format outlined in Regulatory Guide 1.21, Appendix B, Revision 1, June 1974.

(c) A composite sample is one in which the quantity of liquid sampled is proportional to the quantity of liquid waste discharged and in which the method of sampling employed results in a specimen that is representative of the liquids released.

Table 12.3-1 (Page 2 of 4)
Radioactive Liquid Waste Sampling and Analysis Program

LIQUID RELEASE TYPE	SAMPLING FREQUENCY	MINIMUM ANALYSIS FREQUENCY	TYPE OF ACTIVITY ANALYSIS	LOWER LIMIT OF DETECTION (LLD) (μCi/ml) (Refer to Note 1, Page 12-30)
2. Continuous Releases[d]	Continuous[e]	W Composite[e]	Principal Gamma Emitters[b]	5×10^{-7}
			I-131	1×10^{-6}
a. Circulating Water Blowdown	M Grab Sample	M	Dissolved and Entrained Gases (Gamma Emitters)	1×10^{-5}
b. Waste Water Treatement System Discharge to Flume	Continuous[e]	M Composite[e]	H-3	1×10^{-5}
			Gross Alpha	1×10^{-7}
c. Condensate Polisher Sump Discharge	Continuous[e]	Q Composite[e]	Sr-89, Sr-90	5×10^{-8}
			Fe-55	1×10^{-6}

(continued)

(b) The principal gamma emitters for which the LLD specification applies include the following radionuclides: Mn-54, Fe-59, Co-58, Co-60, Zn-65, Mo-99, Cs-134, Cs-137, Ce-141, and Ce-144. This list does not mean that only these nuclides are to be considered. Other gamma peaks that are identifiable, together with those of the above nuclides, shall also be analyzed and reported in the Radioactive Effluent Release Report pursuant to Specification 5.6.3 in the format outlined in Regulatory Guide 1.21, Appendix B, Revision 1, June 1974.

(d) A continuous release is the discharge of liquid wastes of a nondiscrete volume, e.g., from a volume of a system that has an input flow during the continuous release.

(e) To be representative of the quantities and concentrations of radioactive materials in liquid effluents, samples shall be collected continuously in proportion to the rate of flow of the effluent stream. Prior to analyses, all samples taken for the composite shall be thoroughly mixed in order for the composite sample to be representative of the effluent release.

Table 12.3-1 (Page 3 of 4)
Radioactive Liquid Waste Sampling and Analysis Program

LIQUID RELEASE TYPE	SAMPLING FREQUENCY	MINIMUM ANALYSIS FREQUENCY	TYPE OF ACTIVITY ANALYSIS	LOWER LIMIT OF DETECTION (LLD) (μCi/ml) (Refer to Note 1, Page 12-30)
3. Continuous Release[d]	W[f] Grab Sample	W[f]	Principal Gamma Emitters (b)	5×10^{-7}
Essential Service Water Reactor Containment Fan Cooler (RCFC) Outlet Line			I-131	1×10^{-6}
			Dissolved and Entrained Gases (Gamma Emitters)	1×10^{-5}
			H-3	1×10^{-5}

(b) The principal gamma emitters for which the LLD specification applies include the following radionuclides: Mn-54, Fe-59, Co-58, Co-60, Zn-65, Mo-99, Cs-134, Cs-137, Ce-141, and Ce-144. This list does not mean that only these nuclides are to be considered. Other gamma peaks that are identifiable, together with those of the above nuclides, shall also be analyzed and reported in the Radioactive Effluent Release Report pursuant to Specification 5.6.3 in the format outlined in Regulatory Guide 1.21, Appendix B, Revision 1, June 1974.

(d) A continuous release is the discharge of liquid wastes of a nondiscrete volume, e.g., from a volume of a system that has an input flow during the continuous release.

(f) Not required unless the Essential Service Water RCFC Outlet Radiation Monitors 1/2RE-PR002 and 1/2RE-PR003 indicates measured levels greater than 1×10^{-6} μCi/ml above background at any time during the week.

Table 12.3-1 (Page 4 of 4)
Radioactive Liquid Waste Sampling and Analysis Program

Note 1: Lower Limit of Detection (LLD)

The LLD is defined, for purposes of these Technical Requirements, as the smallest concentration of radioactive material in a sample that will yield a net count, above system background, that will be detected with 95% probability with only 5% probability of falsely concluding that a blank observation represents a "real" signal.

For a particular measurement system, which may include radiochemical separation:

$$LLD = \frac{4.66\, s_b}{E * V * 2.22 \times 10^6 * Y * \exp(-\lambda \Delta\tau)}$$

Where:

LLD = the lower limit of detection (microCuries per unit mass or volume),

s_b = the standard deviation of the background counting rate or of the counting rate of a blank sample as appropriate (counts per minute),

E = the counting efficiency (counts per disintegration),

V = the sample size (units of mass or volume),

2.22×10^6 = the number of disintegrations per minute per microCurie,

Y = the fractional radiochemical yield, when applicable,

λ = the radioactive decay constant for the particular radionuclide (sec^{-1}), and

$\Delta\tau$ = the elapsed time between the midpoint of sample collection and the time of counting (sec).

Typical values of E, V, Y, and $\Delta\tau$ should be used in the calculation.

It should be recognized that the LLD is defined as a before the fact limit representing the capability of a measurement system and not as an after the fact limit for a particular measurement.

12.3 RADIOLOGICAL EFFLUENTS (RE) - LIQUID

12.3.2 Dose From Liquid Effluents

12.3.2.A The dose or dose commitment to a MEMBER OF THE PUBLIC from radioactive materials in liquid effluents, from each unit, to UNRESTRICTED AREAS (see Byron Station OFFSITE DOSE CALCULATION MANUAL (ODCM) Annex, Appendix F, Figure F-1) shall be limited:

1. During any calendar quarter to ≤ 1.5 mrem to the whole body and to ≤ 5 mrem to any organ, and

2. During any calendar year to ≤ 3 mrem to the whole body and to ≤ 10 mrem to any organ.

APPLICABILITY: At all times.

ACTIONS

NOTES

1. Separate Condition entry is allowed for each dose.
2. TLCO 3.0.c is not applicable.
3. TLCO 3.0.d is not applicable.

CONDITION	REQUIRED ACTION	COMPLETION TIME
A. Calculated dose exceeding above limits.	A.1 Submit Special Report to the Commission that identifies the cause(s) for exceeding the limit(s) and defines the corrective actions that have been taken to reduce the releases and the proposed corrective actions to be taken to assure that subsequent releases will be in compliance with the above limits.	30 days

SURVEILLANCE REQUIREMENTS

SURVEILLANCE		FREQUENCY
12.3.2.B	Determine cumulative dose contributions from liquid effluents for the current calendar quarter and the current calendar year.	31 days

12.3 RADIOLOGICAL EFFLUENTS (RE) - LIQUID

12.3.3 Liquid Radwaste Treatment System

12.3.3.A The Liquid Radwaste Treatment System shall be OPERABLE and shall be used to reduce releases from each unit to UNRESTRICTED AREAS (see Byron Station OFFSITE DOSE CALCULATION MANUAL (ODCM) Annex, Appendix F, Figure F-1) when the projected dose would exceed 0.06 mrem to the whole body or 0.2 mrem to any organ in a 31 day period.

APPLICABILITY: At all times.

ACTIONS

NOTES

1. Separate Condition entry is allowed for each release.
2. TLCO 3.0.c is not applicable.
3. TLCO 3.0.d is not applicable.

CONDITION	REQUIRED ACTION	COMPLETION TIME
A. Radioactive liquid waste being discharged without treatment. AND In excess of above limits. AND Any portion of the Liquid Radwaste Treatment System not in operation.	A.1 Submit Special Report to the Commission that includes an explanation of why liquid radwaste was being discharged without treatment, identification of any inoperable equipment or subsystems, and the reason for the inoperability; action(s) taken to restore the inoperable equipment to OPERABLE status; and a summary description of actions(s) taken to prevent recurrence.	30 days

SURVEILLANCE REQUIREMENTS

	SURVEILLANCE	FREQUENCY
12.3.3.B.1	----------NOTE---------- Only required to be performed when the Liquid Radwaste Treatment System is not fully utilized. ---------- Project doses due to liquid releases from each unit to UNRESTRICTED AREAS.	31 days
12.3.3.B.2	Verify the installed Liquid Radwaste Treatment System is OPERABLE by meeting the requirements of 12.3.1.A and 12.3.2.A.	Per the applicable Surveillance Requirements

12.4 RADIOLOGICAL EFFLUENTS (RE) - GASEOUS

12.4.1 Dose Rate for Gaseous Effluent

12.4.1.A The dose rate in gaseous effluents from the site to areas at and beyond the SITE BOUNDARY (see Byron Station OFFSITE DOSE CALCULATION MANUAL (ODCM) Annex, Appendix F, Figure F-1) shall be limited to:

1. For noble gases: ≤ 500 mrem/yr to the whole body and ≤ 3000 mrem/yr to the skin, and
2. For Iodine-131 and 133, for tritium, and for all radionuclides in particulate form with half-lives > 8 days: ≤ 1500 mrem/yr to any organ.

APPLICABILITY: At all times.

ACTIONS

NOTES

1. Separate Condition entry is allowed for each dose rate.
2. TLCO 3.0.c is not applicable.
3. TLCO 3.0.d is not applicable.

CONDITION	REQUIRED ACTION	COMPLETION TIME
A. Dose rate exceeding above limits.	A.1 Restore the release rate to within limits.	Immediately

SURVEILLANCE REQUIREMENTS

SURVEILLANCE		FREQUENCY
12.4.1.B.1	Determine dose rate due to noble gases within limits.	Per Table 12.4-1
12.4.1.B.2	Determine dose rate due to I-131, I-133, tritium and all other radionuclides in particulate form with half-lives > 8 days within limits.	Per Table 12.4-1

Table 12.4-1 (Page 1 of 3)
Radioactive Gaseous Waste Sampling and Analysis Program

GASEOUS RELEASE TYPE	SAMPLING FREQUENCY	MINIMUM ANALYSIS FREQUENCY	TYPE OF ACTIVITY ANALYSIS	LOWER LIMIT OF DETECTION (LLD) (μCi/ml) (Refer to Note 1, Page 12-30)
1. Waste Gas Decay Tank	P Each Tank Grab Sample	P Each Tank	Principal Gamma Emitters (a)	1×10^{-4}
2. Containment Purge	P Each PURGE(b) Grab Sample	Each PURGE(b) Grab Sample	Principal Gamma Emitters (a)	1×10^{-4}
			H-3	1×10^{-7}

(continued)

(a) The principal gamma emitters for which the LLD specification applies include the following radionuclides: Kr-87, Kr-88, Xe-133, Xe-133m, Xe-135, and Xe-138 in noble gas releases and Mn-54, Fe-59, Co-58, Co-60, Zn-65, Mo-99, I-131, Cs-134, Cs-137, Ce-141, and Ce-144 in iodine and particulate releases. This list does not mean that only these nuclides are to be considered. Other gamma peaks that are identifiable, together with those of the above nuclides, shall also be analyzed and reported in the Radioactive Effluent Release Report pursuant to Specification 5.6.3, in the format outlined in Regulatory Guide 1.21, Appendix B, Revision 1, June 1974.

(b) Sampling and analysis shall also be performed following shutdown, startup, or a THERMAL POWER change exceeding 15% of RATED THERMAL POWER within a 1-hour period.

Table 12.4-1 (Page 2 of 3)
Radioactive Gaseous Waste Sampling and Analysis Program

GASEOUS RELEASE TYPE	SAMPLING FREQUENCY	MINIMUM ANALYSIS FREQUENCY	TYPE OF ACTIVITY ANALYSIS	LOWER LIMIT OF DETECTION (LLD) (μCi/ml) (Refer to Note 1, Page 12-40)
3. Auxiliary Building Vent Stack (Units 1 and 2)	M[c][d] Grab Sample	M	Principal Gamma Emitters (a)	1×10^{-4}
			H-3	1×10^{-7}
	Continuous[e]	W[f] Charcoal Sample	I-131	1×10^{-12}
			I-133	1×10^{-10}
	Continuous[e]	W[f] Charcoal Sample	Principal Gamma Emitters (a)	1×10^{-11}
	Continuous[e]	Q Composite Particulate Sample	Gross Alpha	1×10^{-11}
	Continuous[e]	Q Composite Particulate Sample	Sr-89, Sr-90	1×10^{-11}
	Continuous	N.A. Noble Gas Monitor	Noble Gases; Gross Beta or Gamma	1×10^{-6}

(a) The principal gamma emitters for which the LLD specification applies include the following radionuclides: Kr-87, Kr-88, Xe-133, Xe-133m, Xe-135, and Xe-138 in noble gas releases and Mn-54, Fe-59, Co-58, Co-60, Zn-65, Mo-99, I-131, Cs-134, Cs-137, Ce-141, and Ce-144 in iodine and particulate releases. This list does not mean that only these nuclides are to be considered. Other gamma peaks that are identifiable, together with those of the above nuclides, shall also be analyzed and reported in the Radioactive Effluent Release Report pursuant to Specification 5.6.3, in the format outlined in Regulatory Guide 1.21, Appendix B, Revision 1, June 1974.

(c) Tritium grab samples shall be taken at least once per 24 hours when the refueling canal is flooded.

(d) Tritium grab samples shall be taken at least once per 7 days from the spent fuel pool area, whenever spent fuel is in the spent fuel pool.

(e) The ratio of the sample flow rate to the sampled stream flow rate shall be known for the time period covered by each dose or dose rate calculation made in accordance with 12.4.1, 12.4.2, and 12.4.3.

(f) Samples shall be changed at least once per 7 days and analyses shall be completed within 48 hours after changing, or after removal from sampler. Sampling shall also be performed at least once per 24 hours for at least 7 days following each shutdown, startup or THERMAL POWER change exceeding 15% of RATED THERMAL POWER within a 1-hour period and analyses shall be completed within 48 hours of changing. When samples collected for 24 hours are analyzed, the corresponding LLDs may be increased by a factor of 10. This requirement does not apply if: (1) analysis shows that the DOSE EQUIVALENT I-131 concentration in the reactor coolant has not increased more than a factor of 3, and (2) the noble gas monitor shows that effluent activity has not increased more than a factor of 3.

Table 12.4-1 (Page 3 of 3)
Radioactive Gaseous Waste Sampling and Analysis Program

Note 1: Lower Limit of Detection (LLD)

The LLD is defined, for purposes of these Technical Requirements, as the smallest concentration of radioactive material in a sample that will yield a net count, above system background, that will be detected with 95% probability with only 5% probability of falsely concluding that a blank observation represents a "real" signal.

For a particular measurement system, which may include radiochemical separation:

$$LLD = \frac{4.66\, s_b}{E * V * 2.22 \times 10^6 * Y * \exp(-\lambda \Delta\tau)}$$

Where:

LLD = the lower limit of detection (microCuries per unit mass or volume),

s_b = the standard deviation of the background counting rate or of the counting rate of a blank sample as appropriate (counts per minute),

E = the counting efficiency (counts per disintegration),

V = the sample size (units of mass or volume),

2.22×10^6 = the number of disintegrations per minute per microCurie,

Y = the fractional radiochemical yield, when applicable,

λ = the radioactive decay constant for the particular radionuclide (sec-1), and

$\Delta\tau$ = the elapsed time between the midpoint of sample collection and the time of counting (sec).

Typical values of E, V, Y, and $\Delta\tau$ should be used in the calculation.

It should be recognized that the LLD is defined as a before the fact limit representing the capability of a measurement system and not as an after the fact limit for a particular measurement.

12.4 RADIOLOGICAL EFFLUENTS (RE) - GASEOUS

12.4.2 Dose - Noble Gases

12.4.2.A The air dose due to noble gases released in gaseous effluents, from each unit, to areas at and beyond the SITE BOUNDARY/UNRESTRICTED AREA boundary (see Byron Station OFFSITE DOSE CALCULATION MANUAL (ODCM) Annex, Appendix F, Figure F-1) shall be limited to:

1) During any calendar quarter: ≤ 5 mrad for gamma radiation and ≤ 10 mrad for beta radiation, and

2) During any calendar year: ≤ 10 mrad for gamma radiation and ≤ 20 mrad for beta radiation.

APPLICABILITY: At all times.

ACTIONS

NOTES

1. Separate Condition entry is allowed for each air dose.
2. TLCO 3.0.c is not applicable.
3. TLCO 3.0.d is not applicable.

CONDITION	REQUIRED ACTION	COMPLETION TIME
A. Calculated air dose exceeding limit.	A.1 Submit a Special Report to the Commission that identifies the cause(s) for exceeding the limits(s) and defines the corrective actions that have been taken to reduce the releases and the proposed corrective actions to be taken to assure that subsequent releases will be in compliance with the above limits.	30 days

SURVEILLANCE REQUIREMENTS

SURVEILLANCE		FREQUENCY
12.4.2.B	Determine cumulative dose contributions for noble gases for the current calendar quarter and current calendar year.	31 days

12.4 RADIOLOGICAL EFFLUENTS (RE) – GASEOUS

12.4.3 Dose - I-131, I-133, Tritium, and Radioactive Material in Particulate Form

12.4.3.A The dose to a MEMBER OF THE PUBLIC from I-131, I-133, tritium, and all radionuclides in particulate form with half-lives > 8 days in gaseous effluents released, from each unit, to areas at and beyond the SITE BOUNDARY/UNRESTRICTED AREA boundary(see BYRON Station OFFSITE DOSE CALCULATION MANUAL (ODCM) Annex, Appendix F, Figure F-1) shall be limited to:

1) During any calendar quarter: ≤ 7.5 mrem to any organ, and

2) During any calendar year: ≤ 15 mrem to any organ.

APPLICABILITY: At all times.

ACTIONS

NOTES

1. Separate Condition entry is allowed for each calculated dose.
2. TLCO 3.0.c is not applicable.
3. TLCO 3.0.d is not applicable.

CONDITION	REQUIRED ACTION	COMPLETION TIME
A. Calculated dose exceeding limit.	A.1 Submit a Special Report to the Commission that identifies the cause(s) for exceeding the limit and defines the corrective actions that have been taken to reduce the releases and the proposed corrective actions to be taken to assure that subsequent releases will be in compliance with the above limits.	30 days

SURVEILLANCE REQUIREMENTS

SURVEILLANCE		FREQUENCY
12.4.3.B	Determine cumulative dose contributions for Iodine-131 and 133, tritium, and radionuclides in particulate form with half-lives > 8 days for the current calendar quarter and current calendar year.	31 days

12.4 RADIOLOGICAL EFFLUENTS (RE) - GASEOUS

12.4.4 Gaseous Radwaste Treatment System

12.4.4.A The VENTILATION EXHAUST TREATMENT SYSTEM and the WASTE GAS HOLDUP SYSTEM shall be OPERABLE and shall be used to reduce activity in releases, from each unit, of gaseous effluents when the projected doses at and beyond the SITE BOUNDARY/UNRESTRICTED AREA boundary (see Byron Station OFFSITE DOSE CALCULATION MANUAL (ODCM) Annex, Appendix F, Figure F-1) in 31 days would exceed:

1) 0.2 mrad to air from gamma radiation,

2) 0.4 mrad to air from beta radiation, or

3) 0.3 mrem to any organ of a MEMBER OF THE PUBLIC.

APPLICABILITY: At all times.

ACTIONS

NOTES

1. Separate Condition entry is allowed for each gaseous release.
2. TLCO 3.0.c is not applicable.
3. TLCO 3.0.d is not applicable.

CONDITION	REQUIRED ACTION	COMPLETION TIME
A. ----------NOTE---------- Only applicable if radioactive gaseous waste being discharged without treatment. ---------- Gaseous releases in excess of limit.	A.1 Submit a Special Report to the Commission that includes the following information: a. Identification of any inoperable equipment or subsystems, and the reason for the inoperability, b. Action(s) taken to restore the inoperable equipment to OPERABLE status, and c. Summary description of action(s) taken to prevent recurrence.	30 days

SURVEILLANCE REQUIREMENTS

	SURVEILLANCE	FREQUENCY
12.4.4.B.1	----------NOTE---------- Only required to be performed when the Gaseous Radwaste Treatment Systems are not being fully utilized. ---------- Project doses due to gaseous releases from each unit to areas at or beyond the SITE BOUNDARY/UNRESTRICTED AREA boundary.	31 days
12.4.4.B.2	Verify the installed VENTILATION EXHAUST TREATMENT SYSTEM and WASTE GAS HOLDUP SYSTEM are OPERABLE by meeting Surveillance Requirements 12.4.1.B and 12.4.2.B or 12.4.3.B.	Per the applicable Surveillance Requirements

12.4 RADIOLOGICAL EFFLUENTS (RE) - GASEOUS

12.4.5 Total Dose

12.4.5.A The annual (calendar year) dose or dose commitment to any MEMBER OF THE PUBLIC due to releases of radioactivity and to radiation from the uranium fuel cycle sources shall be limited to ≤ 25 mrem to the whole body or any organ (except the thyroid) and ≤ 75 mrem to the thyroid.

APPLICABILITY: At all times.

ACTIONS

NOTES

1. Separate Condition entry is allowed for each calculated dose.
2. TLCO 3.0.c is not applicable.
3. TLCO 3.0.d is not applicable.

CONDITION	REQUIRED ACTION	COMPLETION TIME
A. Calculated doses exceeding twice the limits for: 12.3.2.A.1 12.3.2.A.2 12.4.2.A.1 12.4.2.A.2 12.4.3.A.1 or 12.4.3.A.2	A.1 ----------NOTE---------- Calculations to include direct radiation contributions from the units and from outside storage tanks. ---------- Determine if the 12.4.5.A limits have been exceeded.	15 days

(continued)

ACTIONS (continued)

CONDITION	REQUIRED ACTION	COMPLETION TIME
B. Required Action of Condition A determines the 12.4.5.A limits have been exceeded.	B.1 Submit a Special Report to the Commission (Refer to Note 1, Page 12-51).	15 days

SURVEILLANCE REQUIREMENTS

	SURVEILLANCE	FREQUENCY
12.4.5.B.1	----------NOTE---------- Only applicable if Condition A is entered. ---------- Determine cumulative dose contributions from direct radiation from the units and from radwaste storage tanks.	In accordance with the OFFSITE DOSE CALCULATION MANUAL (ODCM)
12.4.5.B.2	Determine cumulative dose contributions from liquid and gaseous effluents in accordance with Surveillance Requirements 12.3.2.B, 12.4.2.B and 12.4.3.B and in accordance with the methodology and parameters in the OFFSITE DOSE CALCULATION MANUAL (ODCM).	Per the applicable Surveillance Requirements
12.4.5.B.3	Inspect the Old Steam Generator Storage Facility (OSGSF) sump for the presence of liquid and the appearance that seepage has occurred.	92 days
12.4.5.B.4	----------NOTE---------- Only required to be performed if 12.4.5.B.3 identifies both the presence of liquid and indications of seepage. ---------- Sample and analyze the liquid from the OSGSF sump.	92 days

NOTE 1

The Special Report shall define the corrective actions to be taken to reduce subsequent releases to prevent recurrence of exceeding the 12.4.5.A limits and includes the schedule for achieving conformance with the 12.4.5.A limits. The Special Report, as defined by 10 CFR 20.405c, shall include an analysis that estimates the radiation exposure to a MEMBER OF THE PUBLIC from the uranium cycle sources, including all effluent pathways and direct radiation, for the calendar year that includes the release(s) covered by this report. It shall also describe levels of radiation and concentration of radioactive material involved, and the cause of the exposure levels or concentrations. If the estimated dose(s) exceeds the 12.4.5.A limits, and if the release condition resulting in violation of 40 CFR Part 190 has not already been corrected, the Special Report shall include a request for a variance in accordance with the provisions of 40 CFR Part 190. Submittal of the report is considered a timely response and a variance is granted until staff action on the request is complete.

12.5 RADIOLOGICAL ENVIRONMENTAL MONITORING PROGRAM

12.5.1 Radiological Environmental Monitoring Program

12.5.1.A The Radiological Environmental Monitoring Program (REMP) shall be conducted as specified in Table 12.5-1.

APPLICABILITY: At all times.

ACTIONS

NOTES

1. TLCO 3.0.c is not applicable.
2. TLCO 3.0.d is not applicable.

CONDITION	REQUIRED ACTION	COMPLETION TIME
A. REMP not being conducted as specified in Table 12.5-1.	A.1 Submit in the Annual Radiological Environmental Operating Report, as required by Specification 5.6.2, a description of the reasons for not conducting the program as required and the plans for preventing recurrence.	12 months

(continued)

ACTIONS (continued)

CONDITION	REQUIRED ACTION	COMPLETION TIME
B. Level of radioactivity as a result of plant effluents in an environmental sampling medium at a specified location exceeding the reporting limits of Table 12.5-2 when averaged over any calendar quarter.	B.1 ----------NOTE---------- The methodology and parameters used to estimate the potential annual dose to a MEMBER OF THE PUBLIC shall be indicated in this report. ---------- Submit a Special Report to the Commission that identifies the cause(s) for exceeding the limit(s) and defines the corrective actions to be taken to reduce radioactive effluents so that the potential annual dose to a MEMBER OF THE PUBLIC is less than the calendar year limits of 12.3.2.A, 12.4.2.A, and 12.4.3.A.	30 days

(continued)

ACTIONS (continued)

CONDITION	REQUIRED ACTION	COMPLETION TIME
C. More than one of the radionuclides in Table 12.5-2 are detected in the sampling medium. AND $\frac{C_1}{RL_1} + \frac{C_2}{RL_2} + \ldots \geq 1.0$ where; C = concentration RL = reporting level.	C.1 ----------NOTE---------- The methodology and parameters used to estimate the potential annual dose to a MEMBER OF THE PUBLIC shall be indicated in this report. ---------- Submit a Special Report to the Commission that identifies the cause(s) for exceeding the limit(s) and defines the corrective actions to be taken to reduce radioactive effluents so that the potential annual dose to a MEMBER OF THE PUBLIC is less than the calendar year limits of 12.3.2.A, 12.4.2.A, and 12.4.3.A.	30 days

(continued)

ACTIONS (continued)

CONDITION	REQUIRED ACTION	COMPLETION TIME
D. Radionuclides other than those in Table 12.5-2 are detected. AND Are the result of plant effluents. AND The potential annual dose to a MEMBER OF THE PUBLIC from all radionuclides is equal to or greater than the calendar limits of 12.3.2.A, 12.4.2.A, and 12.4.3.A.	D.1 ----------NOTE---------- The methodology and parameters used to estimate the potential annual dose to a MEMBER OF THE PUBLIC shall be indicated in this report. ---------- Submit a Special Report to the Commission that identifies the cause(s) for exceeding the limit(s) and defines the corrective actions to be taken to reduce radioactive effluents so that the potential annual dose to a MEMBER OF THE PUBLIC is less than the calendar year limits of 12.3.2.A, 12.4.2.A, and 12.4.3.A.	30 days
E. Measured levels of radioactivity not the result of plant effluents.	E.1 Report and describe the condition in the Annual Radiological Environmental Operating Report required by Specification 5.6.2.	12 months

(continued)

ACTIONS (continued)

CONDITION	REQUIRED ACTION	COMPLETION TIME
F. Milk or fresh leafy vegetable samples unavailable from one or more of the sample locations required by Table 12.5-1.	F.1 Identify specific locations for obtaining replacement samples and add them to the REMP given in the OFFSITE DOSE CALCULATION MANUAL (ODCM).	30 days
	AND	
	F.2 Submit controlled version of the ODCM to the NRC including a revised figure(s) and table reflecting the new location(s) with supporting information identifying the cause of the unavailability of samples, deleting the specific locations from which samples were unavailable and justifying the selection of the new location(s) for obtaining samples.	180 days

SURVEILLANCE REQUIREMENTS

SURVEILLANCE		FREQUENCY
12.5.1B	The radiological environmental monitoring samples shall be collected pursuant to Table 12.5-1 from the specific locations given in the table and figure(s) in the ODCM and shall be analyzed pursuant to the requirements of Table 12.5-1 and the detection capabilities required by Table 12.5-3.	Per the applicable Table(s)

Table 12.5-1 (Page 1 of 5)
Radiological Environmental Monitoring Program

EXPOSURE PATHWAY AND/OR SAMPLE	NUMBER OF REPRESENTATIVE SAMPLES AND SAMPLE LOCATIONS[a]	SAMPLING AND COLLECTION FREQUENCY	TYPE/FREQUENCY OF ANALYSIS
1. Airborne Radioiodine and Particulates	Samples from a total of eight locations: a. Indicator - Near Field Four samples from locations within 4 km (2.5 mi) in different sectors. b. Indicator - Far Field Three additional locations within 4 to 10 km (2.5 to 6.2 mi) in different sectors. c. Control One sample from a control location within 10 to 30 km (6.2 to 18.6 mi).	Continuous sampler operation with sample collection weekly (or more frequently if required due to dust loading).	Radioiodine Canister: I-131 analysis bi-weekly on near field samples and control.[b] Particulate Sampler: Gross beta analysis following weekly filter change[c] and gamma isotopic analysis[d] quarterly on composite filters by location on near field samples and control.[b]

(continued)

(a) Specific parameters of distance and direction from the centerline of the midpoint of the two units and additional description where pertinent, shall be provided for each and every sample location in Table 11-1 of the ODCM Station Annexes. Refer to NUREG-0133, "Preparation of Radiological Effluent Technical Specifications for Nuclear Power Plants," October 1978, and to Radiological Assessment Branch Technical Position, Revision 1, November 1979.

(b) Far field samples are analyzed when the respective near field sample results are inconsistent with previous measurements and radioactivity is confirmed as having its origin in airborne effluents from the station, or at the discretion of the Health Physics Support Director.

(c) Airborne particulate sample filters shall be analyzed for gross beta radioactivity 24 hours or more after sampling to allow for radon and daughter decay. If gross beta activity in air particulate samples is greater than 10 times the yearly mean of control samples, gamma isotopic analysis shall be performed on the individual samples.

(d) Gamma isotopic analysis means the identification and quantification of gamma emitting radionuclides that may be attributable to the effluents from the station.

Table 12.5-1 (Page 2 of 5)
Radiological Environmental Monitoring Program

EXPOSURE PATHWAY AND/OR SAMPLE	NUMBER OF REPRESENTATIVE SAMPLES AND SAMPLE LOCATIONS[a]	SAMPLING AND COLLECTION FREQUENCY	TYPE/FREQUENCY OF ANALYSIS
2. Direct Radiation[e]	Forty routine monitoring stations either with a thermoluminescent dosimeter (TLD) or with one instrument for measuring dose rate continuously, placed as follows: a. Indicator - Inner Ring (100 Series TLD) One in each meteorological sector, in the general area of the SITE BOUNDARY; b. Indicator - Outer Ring (200 Series TLD) One in each meteorological sector, within 6 to 8 km (3.7 to 5.0 mi); and c. Other One at each Location given in part 1.a and 1.b. The balance of the TLDs to be placed at special interest locations beyond the restricted locations beyond the Restricted Area where either a MEMBER OF THE PUBLIC or Commonwealth Edison employees have routine access (300 Series TLD). d. Control One at each Airborne control location given in part 1.c.	Quarterly.	Gamma dose on each TLD quarterly.

(continued)

(a) Specific parameters of distance and direction from the centerline of the midpoint of the two units and additional description where pertinent, shall be provided for each and every sample location in Table 11-1 of the ODCM Station Annexes. Refer to NUREG-0133, "Preparation of Radiological Effluent Technical Specifications for Nuclear Power Plants," October 1978, and to Radiological Assessment Branch Technical Position, Revision 1, November 1979.

(e) One or more instruments, such as a pressurized ion chamber, for measuring and recording dose rate continuously may be used in place of, or in addition to, integrating dosimeters. Film badges shall not be used as dosimeters for measuring direct radiation. The 40 locations is not an absolute number. The number of direct radiation monitoring stations may be reduced according to geographical limitations; e.g., if a station is adjacent to a lake, some sectors may be over water thereby reducing the number of dosimeters which could be placed at the indicated distances. The frequency of analysis or readout for TLD systems will depend upon the characteristics of the specific system used and should be selected to obtain optimum dose information with minimal fading.

Table 12.5-1 (Page 3 of 5)
Radiological Environmental Monitoring Program

EXPOSURE PATHWAY AND/OR SAMPLE	NUMBER OF REPRESENTATIVE SAMPLES AND SAMPLE LOCATIONS[a]	SAMPLING AND COLLECTION FREQUENCY	TYPE/FREQUENCY OF ANALYSIS
3. Waterborne			
a. Ground/Well	a. Indicator Samples from three sources only if likely to be affected.[f]	Quarterly	Gamma isotopic[d] and tritium analysis quarterly.
b. Drinking(g)	a. Indicator Some sample from each community drinking water supply that could be affected by the station discharge within 10 km (6.2 mi) downstream of discharge.	Weekly grab samples	Gross beta and gamma isotopic analyses[d] on monthly composite; tritium analysis on quarterly composite.
c. Surface Water(g)	If no community water supply (Drinking Water) exists within 10 km downstream of discharge then surface water sampling shall be performed. a. Indicator One sample downstream.	Weekly grab samples	Gross beta and gamma isotopic analyses[d] on monthly composite; tritium analysis on quarterly composite.
d. Control Sample(g)	a. Control One surface sample upstream of discharge.	Weekly grab samples	Gross beta and gamma isotopic analyses[d] on monthly composite; tritium analysis on quarterly composite.
e. Sediment	a. Indicator At least one sample from downstream[g] area within 10 km (6.2 mi) distance.	Semiannually	Gamma isotopic analysis[d] semiannually.

(continued)

(a) Specific parameters of distance and direction from the centerline of the midpoint of the two units and additional description where pertinent, shall be provided for each and every sample location in Table 11-1 of the ODCM Station Annexes. Refer to NUREG-0133, "Preparation of Radiological Effluent Technical Specifications for Nuclear Power Plants," October 1978, and to Radiological Assessment Branch Technical Position, Revision 1, November 1979.

(d) Gamma isotopic analysis means the identification and quantification of gamma emitting radionuclides that may be attributable to the effluents from the station.

(f) Groundwater samples shall be taken when this source is tapped for drinking or irrigation purposes in areas where the hydraulic gradient or recharge properties are suitable for contamination.

(g) The "downstream" sample shall be taken in an area beyond but near the mixing zone. The "upstream sample" shall be taken at a distance beyond significant influence of the discharge. Upstream samples in an estuary must be taken far enough up upstream to be beyond the station influence.

Table 12.5-1 (Page 4 of 5)
Radiological Environmental Monitoring Program

EXPOSURE PATHWAY AND/OR SAMPLE	NUMBER OF REPRESENTATIVE SAMPLES AND SAMPLE LOCATIONS[a]	SAMPLING AND COLLECTION FREQUENCY	TYPE/FREQUENCY OF ANALYSIS
4. Ingestion			
a. Milk (h)	a. Indicator Samples from milking animals from a maximum of three locations within 10 km (6.2 mi) distance. b. Control One sample from milking animals at a control location within 15 to 30 km (9.3 to 18.6 mi).	Biweekly[i] when animals are on pasture (May through October), monthly at other times (November through April).	Gamma isotopic[d] and I-131[j] analysis on each sample.
b. Fish	a. Indicator Representative samples of commercially and recreationally important species in discharge area. b. Control Representative samples of commercially and recreationally important species in control locations upstream of discharge.	Two times annually.	Gamma isotopic analysis(d) on edible portions.

(continued)

(a) Specific parameters of distance and direction from the centerline of the midpoint of the two units and additional description where pertinent, shall be provided for each and every sample location in Table 11-1 of the ODCM Station Annexes. Refer to NUREG-0133, "Preparation of Radiological Effluent Technical Specifications for Nuclear Power Plants," October 1978, and to Radiological Assessment Branch Technical Position, Revision 1, November 1979.

(d) Gamma isotopic analysis means the identification and quantification of gamma emitting radionuclides that may be attributable to the effluents from the station.

(h) If milking animals are not found in the designated indicator locations, or if the owners decline to participate in the REMP, all milk sampling shall be discontinued.

(i) Biweekly refers to every two weeks.

(j) I-131 analysis means the analytical separation and counting procedure are specific for this radionuclide.

Table 12.5-1 (Page 5 of 5)
Radiological Environmental Monitoring Program

EXPOSURE PATHWAY AND/OR SAMPLE	NUMBER OF REPRESENTATIVE SAMPLES AND SAMPLE LOCATIONS[a]	SAMPLING AND COLLECTION FREQUENCY	TYPE/FREQUENCY OF ANALYSIS
4. Ingestion (continued)			
c. Food Products	a. Indicator Two representative samples from the principal food pathways grown in each of four major quadrants within 10 km (6.2 mi): At least one root vegetable sample.[k] At least one broad leaf Vegetable (or vegetation) (k). b. Control Two representative samples similar to indicator samples grown within 15 to 30 km (9.3 to 18.6 mi).	Annually.	Gamma isotopic[d] analysis on each sample.

(a) Specific parameters of distance and direction from the centerline of the midpoint of the two units and additional description where pertinent, shall be provided for each and every sample location in Table 11-1 of the ODCM Station Annexes. Refer to NUREG-0133, "Preparation of Radiological Effluent Technical Specifications for Nuclear Power Plants," October 1978, and to Radiological Assessment Branch Technical Position, Revision 1, November 1979.

(d) Gamma isotopic analysis means the identification and quantification of gamma emitting radionuclides that may be attributable to the effluents from the station.

(k) One sample shall consist of a volume/weight of sample large enough to fill contractor specified container.

Table 12.5-2 (Page 1 of 1)
Reporting Levels for Radioactivity Concentrations in Environmental Samples

ANALYSIS	WATER (pCi/l)	AIRBORNE PARTICULATE OR GASES (pCi/m^3)	FISH (pCi/kg, wet)	MILK (pCi/l)	FOOD PRODUCTS (pCi/kg, wet)
H-3	20,000[a]				
Mn-54	1,000		30,000		
Fe-59	400		10,000		
Co-58	1,000		30,000		
Co-60	300		10,000		
Zn-65	300		20,000		
Zr-Nb-95	400				
I-131	2[b]	0.9		3	100
Cs-134	30	10	1,000	60	1,000
Cs-137	50	20	2,000	70	2,000
Ba-La-140	200			300	

(a) For drinking water samples. This is 40 CFR Part 141 value. If no drinking water pathway exists, a value of 30,000 pCi/l may be used.

(b) If no drinking water pathway exists, a value of 20 pCi/l may be used.

Table 12.5-3 (Page 1 of 2)
Detection Capabilities for Environmental Sample Analysis[a]
Lower Limit of Detection (LLD)[b] (Refer to Note 1, Page 12-65)

ANALYSIS	WATER (pCi/l)	AIRBORNE PARTICULATE OR GAS (pCi/m^3)	FISH (pCi/kg, wet)	MILK (pCi/l)	FOOD PRODUCTS (pCi/kg, wet)	SEDIMENT (pCi/kg, dry)
Gross Beta	4	0.01	1000			
H-3	2000[e]					
Mn-54	15		130			
Fe-59	30		260			
Co-58,60	15		130			
Zn-65	30		260			
Zr-Nb-95	15					
I-131	1/15[c]	0.07	100	0.5/5[d]	60	
Cs-134	15	0.01	100	15	60	150
Cs-137	18	0.01	100	18	80	180
Ba-La-140	15			15		

(a) This list does not mean that only these nuclides are to be considered. Other peaks at are identifiable, together with those of the above nuclides, shall also be analyzed and reported in the Annual Radiological Environmental Operating Report pursuant to Technical Specification 5.6.2.

(b) Required detection capabilities for thermoluminescent dosimeters used for environmental measurements shall be in accordance with the recommendations of Regulatory Guide 4.13.

(c) If no drinking water pathway exists, the value of 15 pCi/l may be used.

(d) A value of 0.5 pCi/l shall be used when the animals are on pasture (May through October) and a value of 5 pCi/l shall be used at all other times (November through April).

(e) This LLD is the minimum allowable, however, vendors performing environmental sample analyses offsite will be required to meet an LLD of 200 pCi/l.

Table 12.5-3 (Page 2 of 2)
Detection Capabilities for Environmental Sample Analysis
Lower Limit of Detection (LLD)

Note 1: Lower Limit of Detection (LLD)

The LLD is defined, for purposes of these Technical Requirements, as the smallest concentration of radioactive material in a sample that will yield a net count, above system background, that will be detected with 95% probability with only 5% probability of falsely concluding that a blank observation represents a "real" signal.

For a particular measurement system, which may include radiochemical separation:

$$LLD = \frac{4.66\ s_b}{E * V * 2.22 * Y * \exp(-\lambda \Delta \tau)}$$

Where:

LLD = the "a priori" lower limit of detection (picoCuries per unit mass or volume),

s_b = the standard deviation of the background counting rate or of the counting rate of a blank sample as appropriate (counts per minute),

E = the counting efficiency (counts per disintegration),

V = the sample size (units of mass or volume),

2.22 = the number of disintegrations per minute per picoCurie,

Y = the fractional radiochemical yield, when applicable,

λ = the radioactive decay constant for the particular radionuclide (sec^{-1}), and

$\Delta\tau$ = the elapsed time between the midpoint of sample collection and the time of counting (sec).

Typical values of E, V, Y, and $\Delta\tau$ should be used in the calculation.

It should be recognized that the LLD is defined as a before the fact limit representing the capability of a measurement system and not as an after the fact limit for a particular measurement. Analyses shall be performed in such a manner that the stated LLDs will be achieved under routine conditions. Occasionally, background fluctuations, unavoidable small sample sizes, the presence of interfering nuclides, or other uncontrollable circumstances may render these LLDs unachievable. In such cases, the contributing factors shall be identified and described in the Annual Radiological Environmental Operating Report pursuant to Technical Specification 5.6.2.

12.5 RADIOLOGICAL ENVIRONMENTAL MONITORING PROGRAM

12.5.2 Land Use Census

12.5.2.B The Land Use Census shall be conducted and shall identify within a distance of 10 km (6.2 miles) the location in each of the 16 meteorological sectors (Refer to Note 1, Page 12-68) of the nearest milk animal, the nearest residence (Refer to Note 2, Page 12-68), and a enumeration of livestock. For dose calculation, a garden will be assumed at the nearest residence.

APPLICABILITY: At all times.

ACTIONS

NOTES

1. TLCO 3.0.c is not applicable.
2. TLCO 3.0.d is not applicable.

CONDITION	REQUIRED ACTION	COMPLETION TIME
A. Calculated dose or dose commitment greater than the value currently calculated in 12.4.3.A.1	A.1 Identify the new location(s) in the next Annual Radiological Environmental Operating Report pursuant to Technical Specification 5.6.2.	12 months

(continued)

ACTIONS (continued)

CONDITION	REQUIRED ACTION	COMPLETION TIME
B. Identification of a location that yields a calculated dose or dose commitment (via the same exposure pathway) 20% greater than at a location from which samples are currently being obtained, in accordance with 12.5.1.A.	B.1 Add the new location(s) to the Radiological Environmental Monitoring Program (REMP) given in the OFFSITE DOSE CALCULATION MANUAL (ODCM) (Refer to Note 3, Page 12-68) .	30 days

SURVEILLANCE REQUIREMENTS

SURVEILLANCE		FREQUENCY
12.5.2.B	The Land Use Census (Refer to Note 4, Page 12-68) shall be conducted during the growing season (01 JUN – 01 OCT).	12 months

Note 1: This requirement may be reduced according to geographical limitations; e.g. at a lake site where some sectors will be over water.

Note 2: The nearest industrial facility shall also be documented if closer than the nearest residence.

Note 3: The sampling location(s), excluding the control station location, having the lowest calculated dose or dose commitment(s), via the same exposure pathway, may be deleted from this monitoring program after October 31 of the year in which this Land Use Census was conducted. Pursuant to Technical Specification 5.5.1.c, submit in the next Annual Radiological Environmental Operating Report documentation for a change in the ODCM including a revised figure(s) and table(s) for the ODCM reflecting the new location(s) with information supporting the change in sampling locations.

Note 4: The Land Use Census shall use information that will provide the best results, such as by a door-to-door survey, aerial survey, or by consulting local agriculture authorities. The results of the Land Use Census shall be included in the Annual Radiological Environmental Operating Report.

12.5 RADIOLOGICAL ENVIRONMENTAL MONITORING PROGRAM

12.5.3 Interlaboratory Comparison Program

12.5.3.A Analyses shall be performed on radioactive materials, supplied as part of an Interlaboratory Comparison Program that corresponds to samples required by Table 12.5-1.

APPLICABILITY: At all times.

ACTIONS

NOTES

1. TLCO 3.0.c is not applicable.
2. TLCO 3.0.d is not applicable.

CONDITION	REQUIRED ACTION	COMPLETION TIME
A. Analyses NOT being performed per Table 12.5-1.	A.1 Report the corrective actions to preclude recurrence in the Annual Radiological Operating Report to the Commission pursuant to Technical Specification 5.6.2.	12 months

SURVEILLANCE REQUIREMENTS

SURVEILLANCE		FREQUENCY
12.5.3.B	Summarize the results obtained as part of the Interlaboratory Comparison Program in the Annual Radiological Environmental Operating Report to the Commission pursuant to Technical Specification 5.6.2.	12 months

12.6 REPORTING REQUIREMENTS

12.6.1 Annual Radiological Environmental Operating Report*

Routine Annual Radiological Environmental Operating Report covering the operation of the Unit(s) during the previous calendar year shall be submitted prior to May 15 of each year.

The Annual Radiological Environmental Operating Report shall include summaries, interpretations, and an analysis of trends of the results of the radiological environmental surveillance activities for the report period, including a comparison with operational controls as appropriate, and with previous environmental surveillance reports, and an assessment of the observed impacts of the plant operation on the environment.

The Annual Radiological Environmental Operating Report shall include the results of all radiological environmental samples and of all environmental radiation measurements taken during the period pursuant to the locations specified in the tables and figures in Chapter 11 of the ODCM, as well as summarized and tabulated results of these analyses and measurements in the format of the table in the Radiological Assessment Branch Technical Position, Revision 1, November 1979. In the event that some individual results are not available for inclusion with the report, the report shall be submitted noting and explaining the reasons for the missing results. The missing data shall be submitted as soon as possible in a supplementary report.

The reports shall also include the following: a summary description of the Radiological Environmental Monitoring Program; legible maps covering all sampling locations keyed to a table giving distances and directions from the midpoint between the two units; reasons for not conducting the Radiological Environmental Monitoring Program as required by Section 12.5.1, a Table of Missed Samples and a Table of Sample Anomalies for all deviations from the sampling schedule of Table 11.1-1; discussion of environmental sample measurements that exceed the reporting levels of Table 12.5-2 but are not the result of plant effluents, discussion of all analyses in which the LLD required by Table 12.5-3 was not achievable; result of the Land Use Census required by Section 12.5.2; and the results of the licensee participation in an Interlaboratory Comparison Program and the corrective actions being taken if the specified program is not being performed as required by Section 12.5.3.

*A single submittal may be made for a multiple unit station.

12.6 REPORTING REQUIREMENTS (Cont'd)

12.6.1 Annual Radiological Environmental Operating Report (Cont'd)

The Annual Radiological Environmental Operating Report shall also include an annual summary of hourly meteorological data collected over the applicable year. This annual summary may be either in the form of an hour-by-hour listing on magnetic tape of wind speed, wind direction, atmospheric stability, and precipitation (if measured), or in the form of joint frequency distributions of wind speed, wind direction, and atmospheric stability. In lieu of submission with the Annual Radiological Environmental Operating Report, the licensee has the option of retaining this summary of required meteorological data on site in a file that shall be provided to the NRC upon request.

The Annual Radiological Environmental Operating Report shall also include an assessment of the radiation doses due to the radioactive liquid and gaseous effluents released from the Unit or Station during the previous calendar year. This report shall also include an assessment of the radiation doses to the most likely exposed MEMBER OF THE PUBLIC from reactor releases and other near-by uranium fuel cycle sources including doses from primary effluent pathways and direct radiation, for the previous calendar year. The assessment of radiation doses shall be performed in accordance with the methodology and parameters in the ODCM, and in compliance with 10CFR20 and 40 CFR Part 190, "Environmental Radiation Protection Standards for Nuclear Power Operation."

12.6 REPORTING REQUIREMENTS (Cont'd)

12.6.2 Annual Radioactive Effluent Release Report**

Routine Annual Radioactive Effluent Release Reports covering the operation of the unit during the previous calendar year of operation shall be submitted prior to May 1 of the following year.

The Annual Radioactive Effluent Release Reports shall include a summary of the quantities of radioactive liquid and gaseous effluents and solid waste released from the unit as outlined in Regulatory Guide 1.21, "Measuring Evaluating, and Reporting Radioactivity in Solid Wastes and Releases of Radioactive Materials in Liquid and Gaseous Effluents from Light-Water-Cooled Nuclear Power Plants," Revision 1, June 1974, with data summarized on a quarterly basis following the format of Appendix B thereof.

For solid wastes, the format for Table 3 in Appendix B shall be supplemented with three additional categories: class of solid wastes (as defined by 10 CFR Part 61), type of container (e.g., LSA, Type A, Type B, Large Quantity), and SOLIDIFICATION agent or absorbent (e.g., cement, urea formaldehyde).

The Annual Radioactive Effluent Release Reports shall include a list and description of unplanned releases from the site to UNRESTRICTED AREAS of radioactive materials in gaseous and liquid effluents made during the reporting period.

The Annual Radioactive Effluent Release Reports shall include any changes made during the reporting period to the PCP as well as any major changes to Liquid, Gaseous or Solid Radwaste Treatment Systems, pursuant to Section 12.6.3.

The Annual Radioactive Effluent Release Reports shall also include the following: an explanation as to why the inoperability of liquid or gaseous effluent monitoring instrumentation was not corrected within the time specified in Section 12.2.1 or 12.2.2, respectively; and description of the events leading to liquid holdup tanks or gas storage tanks exceeding the limits of ITS 5.5.12.

** A single submittal may be made for a multiple unit station. The submittal should combine those sections that are common to all units at the station; however, for units with separate radwaste systems, the submittal shall specify the releases of radioactive material from each unit.

12.6 REPORTING REQUIREMENTS (Cont'd)

12.6.3 Offsite Dose Calculation Manual (ODCM)

12.6.3.1 The ODCM shall be approved by the Commission prior to implementation.

12.6.3.2 Licensee-initiated changes to the ODCM:

a. Shall be documented and records of reviews performed shall be retained as required by UFSAR Chapter 17. This documentation shall contain:

1. Sufficient information to support the change together with the appropriate analyses or evaluations justifying the changes(s); and

2. A determination that the change will maintain the level of radioactive effluent control required by 10 CFR Part 20, 40 CFR Part 190, 10 CFR 50.36a, and Appendix I to 10 CFR Part 50 and not adversely impact the accuracy or reliability of effluent, dose, or setpoint calculations.

b. Shall become effective after review and acceptance by the Independent Technical Review and PORC and the approval of the Plant Manager on the date specified by the Independent Technical Review and PORC.

c. Shall be submitted to the Commission in the form of the complete, legible copy of the entire ODCM, or updated pages if the Commission retains a controlled copy. If an entire copy of the ODCM is submitted, it shall be submitted as a part of or concurrent with the Annual Radioactive Effluent Release Report for the period of the report in which any change to the ODCM was made effective. Each change shall be identified by markings in the margin of the affected pages, clearly indicating the area of the page that was changed, and shall indicate the date (e.g., month/year) the change was implemented.

12.6 REPORTING REQUIREMENTS (Cont'd)

12.6.4 Major Changes to Liquid and Gaseous Radwaste Treatment Systems***

Licensee-initiated major changes to the Radwaste Treatment Systems (liquid and gaseous):

a. Shall be reported to the Commission in the Annual Radioactive Effluent Release Report for the period in which the evaluation was reviewed by the Independent Technical Review and PORC. The discussion of each change shall contain:

1) A summary of the evaluation that led to the determination that the change could be made in accordance with 10 CFR 50.59;

2) Sufficient detailed information to totally support the reason for the change without benefit of additional and supplemental information;

3) A detailed description of the equipment, components, and processes involved and the interfaces with other plant systems.

4) An evaluation of the change which shows the predicted releases of radioactive materials in liquid and gaseous effluents that differ from those previously predicted in the License application and amendments thereto;

5) An evaluation of the change, which shows the expected maximum exposures to a MEMBER OF THE PUBLIC in the UNRESTRICTED AREA and to the general population that differ from those previously estimated in the License application and amendments thereto;

6) A comparison of the predicted releases of radioactive materials, in liquid and gaseous effluents, to the actual releases for the period prior to when the changes are to be made;

7) An estimate of the exposure to plant operating personnel as a result of the change; and

8) Documentation of the fact that the change was reviewed and found acceptable by the Independent Technical Review and PORC.

b. Shall become effective upon review and acceptance by the Independent Technical Review and PORC.

***Licensees may choose to submit the information called for in this standard as part of the annual FSAR update.

BYRON ANNEX INDEX

PAGE	REVISION	PAGE	REVISION
APPENDIX F			
F-i	1.3	F-43	1.3
F-ii	1.3	F-44	1.3
F-iii	1.3	F-45	1.3
F-iv	1.3	F-46	1.3
F-1	1.3	F-47	1.3
F-2	1.3		
F-3	1.3		
F-4	1.3		
F-5	1.3		
F-6	1.3		
F-7	1.3		
F-8	1.3		
F-9	1.3		
F-10	1.3		
F-11	1.3		
F-12	1.3		
F-13	1.3		
F-14	1.3		
F-15	1.3		
F-16	1.3		
F-17	1.3		
F-18	1.3		
F-19	1.3		
F-20	1.3		
F-21	1.3		
F-22	1.3		
F-23	1.3		
F-24	1.3		
F-25	1.3		
F-26	1.3		
F-27	1.3		
F-28	1.3		
F-29	1.3		
F-30	1.3		
F-31	1.3		
F-32	1.3		
F-33	1.3		
F-34	1.3		
F-35	1.3		
F-36	1.3		
F-37	1.3		
F-38	1.3		
F-39	1.3		
F-40	1.3		
F-41	1.3		
F-42	1.3		

APPENDIX F

STATION-SPECIFIC DATA FOR BYRON UNITS 1 AND 2

TABLE OF CONTENTS

	PAGE
F.1 INTRODUCTION	F-1
F.2 REFERENCES	F-1

APPENDIX F

LIST OF TABLES

NUMBER	TITLE	PAGE
F-1	Aquatic Environmental Dose Parameters	F-2
F-2	Station Characteristics	F-4
F-3	Critical Ranges	F-5
F-4	Average Wind Speeds	F-6
F-5	X/Q and D/Q Maxima At or Beyond the Unrestricted Area Boundary	F-7
F-5a	X/Q and D/Q Maxima At or Beyond the Restricted Area Boundary	F-8
F-6	D/Q at the Nearest Milk Cow and Meat Animal Locations Within 5 Miles	F-9
F-7	Maximum Offsite Finite Plume Gamma Dose Factors Based on 1 cm Depth at the Unrestricted Area Boundary for Selected Nuclides	F-10
F-7a	Maximum Offsite Finite Plume Gamma Dose Factors Based on 1 cm Depth at the Restricted Area Boundary for Selected Nuclides	F-25
Supplemental Tables		
A	Mixed Mode Joint Frequency Distribution Table Summaries - 250 and 30 Foot Elevation Data	F-40
	-Summary Table of Percent by Direction and Class -Summary Table of Percent by Direction and Speed -Summary Table of Percent by Speed and Class	
B	Ground Level Joint Frequency Distribution Table Summaries	F-44
	-Summary Table of Percent by Direction and Class -Summary Table of Percent by Direction and Speed -Summary Table of Percent by Speed and Class	

APPENDIX F

LIST OF FIGURES

NUMBER	TITLE	PAGE
F-1	Unrestricted Area Boundary	F-46
F-2	Restricted Area Boundary	F-47

APPENDIX F

STATION-SPECIFIC DATA FOR BYRON UNITS 1 AND 2

F.1 INTRODUCTION

This appendix contains data relevant to the Byron site. Included is a figure showing the unrestricted area boundary and values of parameters used in offsite dose assessment.

Dose factors are changed from previous revisions only if a higher value is justified based on new census data. Nearest resident, milk cow, and meat animal ranges are changed from previous revisions only if a more conservative value is justified based on new census data. Original tables were based upon the 1993 Annual Land Use Census performed by Teledyne Isotopes Midwest Laboratories.

F.2 REFERENCES

1. Sargent & Lundy, Analysis and Technology Division Byron Calculation No. ATD-0150, Revisions 0, 1, and 2.

2. "Irrigation from the Rock River" letter from G.P. Lahti (Sargent & Lundy) to J.C. Golden (NSEP), June 4, 1990.

3. "Verification of Environmental Parameters used for Commonwealth Edison Company's Offsite Dose Calculations," NUS Corporation, 1988.

4. "Verification of Environmental Parameters used for Commonwealth Edison Company's Offsite Dose Calculations," NUTECH Engineers Group, 1992.

Table F-1
Aquatic Environmental Dose Parameters

General Information[a]

There are no public potable water intakes on the Rock River downstream of the station.

There is no irrigation occurring on the Rock River downstream of the station.

Recreation includes one or more of the following: boating, waterskiing, swimming, and sport fishing.

According to Section 2.4.1.2 and Figure 2.4-5 of the Byron Environmental Report, there are four downstream dams on the Rock River within approximately 50 miles of the station one at Oregon, Dixon, and two at Sterling.

Water and Fish Ingestion Parameters

Parameter[b]	Value
I/M^w, I/M^f	1.0
F^w, cfs	6.55E4
F^f, cfs	6.25E3
t^f, hr[c]	24.0
t^w, hr[d]	115

Limits on Radioactivity in Unprotected Outdoor Tanks[e]

Outside Temporary Tank $\leq$ 10 Ci[f]

(per Technical Specification 3.11)

[a] This is based on information in the Byron Environmental Report, Figure 3.3-1 and Section 2.1.3.2.1.

[b] The parameters are defined in Section A.2.1 of Appendix A.

[c] t^f (hr) = 24 hr (all stations) for the fish ingestion pathway

Table F-1 (Cont'd)
Aquatic Environmental Dose Parameters

Notes (Cont'd):

[d] t^w (hr) = 115 hr (Rock River flows into Mississippi River about 115 miles downstream of the station at the rate of 1 mph based on the data in Table 2.2-5 of the Byron Station Environmental Report).

[e] See Section A.2.4 of Appendix A.

[f] Tritium and dissolved or entrained noble gases are excluded from this limit.

Table F-2

Station Characteristics

STATION: Byron

LOCATION: 3.7 miles SSW of Byron, Illinois

CHARACTERISTICS OF ELEVATED RELEASE POINT: Not applicable (NA)

1) Release Height = ___m 2) Diameter = _____m

3) Exit Speed = ___ms^{-1} 4) Heat Content = ____KCal S^{-1a}

CHARACTERISTICS OF VENT STACK RELEASE POINTS*

1) Release Height = 60.66 m[a] 2) Effective Diameter = 2.80 m

3) Exit Speed = 13.00 ms^{-1a}

*The station has two adjacent rectangular vent stack release points of the same height and cross section. Their centers are 15.01 m apart.

CHARACTERISTICS OF GROUND LEVEL RELEASE

1) Release Height = 0 m

2) Building Factor (D) = 60.6 m[a]

METEOROLOGICAL DATA

A 250 ft Tower is located 1036 m SW of vent stack release point

---

Tower Data Used in Calculations

Release Point	Wind Speed and Direction	Differential Temperature
Elevated	(NA)	(NA)
Vent	250 ft	250 - 30 ft
Ground	30 ft	250 - 30 ft

[a]Used in calculating the meteorological and dose factors in Tables F-5, F-6, and F-7. See Sections B.3 through B.6 of Appendix B.

Table F-3
Critical Ranges

Direction	Unrestricted Area Boundary[a] (m)	Restricted Area Boundary (m)	Nearest Resident[b] (m)	Nearest Dairy Farm Within 5 Miles[b]
N	1875	777	4300	None
NNE	1829	538	1600	None
NE	1585	528	1000	3000
ENE	1234	474	2100	None
E	1227	468	2100	None
ESE	991	480	2300	None
SE	1006	427	1200	None
SSE	800	410	1000	None
S	945	295	800	7700
SSW	975	299	1000	None
SW	1067	451	1200	None
WSW	1212	386	2700	None
W	1189	379	2700	4000
WNW	1227	385	1200	5300
NW	1128	445	1600	4800
NNW	1044	658	2100	None

[a]See Updated Final Safety Analysis Report Table 2.1-1a and Environmental Report. Used in calculating the meteorological and dose factors in Tables F-5 and F-7. See Sections B.3 through B.6 of Appendix B.

[b] The distances are rounded to the nearest conservative 100 meters.

Table F-4

Average Wind Speeds

Downwind Direction	Average Wind Speed (m/sec)[a]		
	Elevated[b]	Mixed Mode	Ground Level[b]
N	7.9	6.3	4.2
NNE	7.6	6.3	4.5
NE	6.8	5.8	4.1
ENE	6.6	5.6	4.0
E	6.9	5.9	4.5
ESE	6.9	5.9	4.5
SE	6.5	5.7	4.0
SSE	6.2	5.4	3.7
S	6.3	5.4	4.0
SSW	6.0	5.3	3.9
SW	6.1	5.4	4.2
WSW	6.4	5.6	4.1
W	6.8	5.5	3.4
WNW	7.1	5.7	3.7
NW	7.1	5.7	3.8
NNW	7.7	6.0	4.1

[a]Based on Byron site meteorological data, January 1978 through December 1987. Calculated in Reference 2 of Section F.2 using formulas in Section B.1.3 of Appendix B.

[b]The elevated and ground level values are provided for reference purposes only. Routine dose calculations are performed using the mixed mode values.

Table F-5
X/Q and D/Q Maxima at or Beyond the Unrestricted Area Boundary

Downwind Direction	Mixed Mode(Vent) Release Radius (meters)	X/Q (sec/m**3)	Radius (meters)	D/Q (1/m**2)	Ground Level Release Radius (meters)	X/Q (sec/m**3)	D/Q (1/m**2)
N	1875.	1.988E-07	1875.	1.983E-09	1875.	8.676E-07	4.671E-09
NNE	1829.	1.677E-07	1829.	1.927E-09	1829.	7.531E-07	4.271E-09
NE	1585.	1.530E-07	1585.	1.821E-09	1585.	7.876E-07	4.388E-09
ENE	1234.	1.353E-07	1234.	1.764E-09	1234.	8.808E-07	5.036E-09
E	1227.	1.688E-07	1227.	2.335E-09	1227.	1.143E-06	6.226E-09
ESE	991.	2.519E-07	991.	3.540E-09	991.	1.692E-06	9.896E-09
SE	1006.	3.020E-07	1006.	3.578E-09	1006.	2.480E-06	1.118E-08
SSE	800.	4.497E-07	800.	3.761E-09	800.	4.152E-06	1.420E-08
S	945.	2.249E-07	945.	2.792E-09	945.	1.946E-06	9.364E-09
SSW	975.	1.476E-07	975.	1.970E-09	975.	1.305E-06	6.672E-09
SW	1067.	1.148E-07	1067.	1.786E-09	1067.	9.279E-07	5.316E-09
WSW	1212.	1.199E-07	1212.	1.903E-09	1212.	7.646E-07	5.002E-09
W	1189.	1.758E-07	1189.	1.870E-09	1189.	9.348E-07	5.330E-09
WNW	1227.	1.205E-07	1227.	1.292E-09	1227.	6.543E-07	3.745E-09
NW	1128.	1.686E-07	1128.	1.719E-09	1128.	8.807E-07	4.984E-09
NNW	1044.	3.047E-07	1044.	3.223E-09	1044.	1.432E-06	8.871E-09

Byron Site Meteorological Data 1/78 - 12/87

Note: Based on Reference 2 of Section F.2 and the formulas in Sections B.3 and B.4 of Appendix B.

X/Q is used for beta skin, and inhalation dose pathways. See Sections A.1.2, A.1.3, and A.1.4.2 of Apprendix A.

D/Q is used for produce and leafy vegetable pathways. Section A.1.4 of Appendix A.

The ground level release data are provided for reference purposes only. Routine dose calculations are performed using mixed mode data.

Radius is the approximate distance from the midpoint between gaseous effluent release points to the location of highest X/Q or D/Q at or beyond the unrestricted area boundary (UAB).

Table F-5a
X/Q and D/Q Maxima at or Beyond the Restricted Area Boundary

Downwind Direction	Mixed Mode(Vent) Release Radius (meters)	X/Q (sec/m**3)	Radius (meters)	D/Q (1/m**2)	Ground Level Release Radius (meters)	X/Q (sec/m**3)	D/Q (1/m**2)
N	777.	6.357E-07	777.	7.004E-09	777.	3.290E-06	2.036E-08
NNE	538.	8.778E-07	538.	1.046E-08	538.	5.086E-06	3.193E-08
NE	528.	6.803E-07	528.	7.792E-09	528.	4.371E-06	2.646E-08
ENE	474.	5.341E-07	474.	5.947E-09	474.	4.014E-06	2.346E-08
E	468.	6.698E-07	468.	7.930E-09	468.	5.359E-06	2.930E-08
ESE	480.	7.377E-07	480.	8.963E-09	480.	5.434E-06	3.144E-08
SE	427.	1.126E-06	427.	1.063E-08	427.	1.024E-05	4.352E-08
SSE	410.	1.349E-06	410.	8.744E-09	410.	1.305E-05	4.044E-08
S	295.	1.441E-06	295.	1.171E-08	295.	1.391E-05	5.707E-08
SSW	299.	9.382E-07	299.	8.293E-09	299.	9.376E-06	4.197E-08
SW	451.	3.949E-07	451.	5.065E-09	451.	3.666E-06	2.095E-08
WSW	386.	6.098E-07	386.	7.425E-09	386.	4.699E-06	3.088E-08
W	379.	1.041E-06	379.	8.116E-09	379.	6.009E-06	3.275E-08
WNW	385.	7.454E-07	385.	6.081E-09	385.	4.382E-06	2.370E-08
NW	445.	7.394E-07	445.	6.117E-09	445.	4.068E-06	2.198E-08
NNW	658.	6.123E-07	658.	6.177E-09	658.	2.980E-06	1.874E-08

Byron Site Meteorological Data 1/78 - 12/87

Note: Based on Reference 2 of Section F.2 and the formulas in Sections B.3 and B.4 of Appendix B.

The ground level release data are provided for reference purposes only. Routine dose calculations are performed using mixed mode data.

Radius is the approximate distance from the midpoint between gaseous effluent release points to the location of highest X/Q or D/Q at or beyond the restricted area boundary (RAB).

Table F-6

D/Q at the Nearest Milk Cow and Meat Animal Locations within 5 miles

Downwind Direction	Nearest Milk Cow D/Q(1/m**2) Radius (meters)	Mixed Release	Ground Release	Nearest Meat Animal D/Q(1/m**2) Radius (meters)	Mixed Release	Ground Release
N	8000	1.895E-10	3.643E-10	4800	4.499E-10	9.079E-10
NNE	8000	1.835E-10	3.192E-10	2400	1.282E-09	2.677E-09
NE	3000	7.187E-10	1.462E-09	5500	2.799E-10	5.027E-10
ENE	8000	1.096E-10	1.928E-10	3700	3.792E-10	7.603E-10
E	8000	1.417E-10	2.361E-10	3600	5.164E-10	9.770E-10
ESE	8000	1.614E-10	2.635E-10	2400	1.082E-09	2.209E-09
SE	8000	1.698E-10	3.050E-10	2700	9.439E-10	2.085E-09
SSE	8000	1.387E-10	2.664E-10	5100	2.923E-10	5.968E-10
S	7700	1.381E-10	2.477E-10	900	2.967E-09	1.014E-08
SSW	8000	9.795E-11	1.729E-10	3500	3.645E-10	7.563E-10
SW	8000	9.554E-11	1.596E-10	5100	2.006E-10	3.574E-10
WSW	8000	1.202E-10	1.858E-10	2700	6.571E-10	1.270E-09
W	4000	3.281E-10	6.590E-10	2700	5.945E-10	1.310E-09
WNW	5300	1.464E-10	2.968E-10	5300	1.464E-10	2.968E-10
NW	4800	1.978E-10	4.088E-10	6100	1.339E-10	2.674E-10
NNW	8000	1.349E-10	2.571E-10	2200	1.092E-09	2.596E-09

Byron Site Meteorological Data 1/78 - 12/87

Note: Based on Reference 2 in Section F.2 and the formulas in Section B.4 of Appendix B.

Approximate distance from the station as determined by annual census.

The ground level release data are provided for reference purposes only.

Routine dose calculations are performed using mixed mode release data.

Table F-7

Maximum Offsite Finite Plume Gamma Dose Factors Based on 1 cm Depth at the Unrestricted Area Boundary for Kr-83m

Downwind Direction	Unrestricted Area Bound (meters)	Mixed Mode(Vent) Release Radius (meters)	V (mrad/yr)/(uCi/sec)	VBAR (mrad/yr)/(uCi/sec)	Ground Level Release Radius (meters)	G (mrad/yr)/(uCi/sec)	GBAR (mrad/yr)/(uCi/sec)
N	1875.	1875.	2.330E-05	1.757E-05	1875.	9.565E-05	7.212E-05
NNE	1829.	1829.	1.937E-05	1.460E-05	1829.	8.084E-05	6.095E-05
NE	1585.	1585.	1.773E-05	1.336E-05	1585.	8.469E-05	6.386E-05
ENE	1234.	1234.	1.672E-05	1.260E-05	1234.	1.002E-04	7.555E-05
E	1227.	1227.	2.049E-05	1.545E-05	1227.	1.252E-04	9.441E-05
ESE	991.	991.	3.142E-05	2.369E-05	991.	1.925E-04	1.451E-04
SE	1006.	1006.	3.694E-05	2.785E-05	1006.	2.683E-04	2.023E-04
SSE	800.	800.	5.135E-05	3.872E-05	800.	4.267E-04	3.217E-04
S	945.	945.	2.723E-05	2.053E-05	945.	2.121E-04	1.600E-04
SSW	975.	975.	1.795E-05	1.353E-05	975.	1.407E-04	1.061E-04
SW	1067.	1067.	1.379E-05	1.040E-05	1067.	9.817E-05	7.402E-05
WSW	1212.	1212.	1.483E-05	1.118E-05	1212.	8.590E-05	6.477E-05
W	1189.	1189.	2.193E-05	1.654E-05	1189.	1.100E-04	8.293E-05
WNW	1227.	1227.	1.514E-05	1.141E-05	1227.	7.802E-05	5.883E-05
NW	1128.	1128.	2.112E-05	1.593E-05	1128.	1.033E-04	7.789E-05
NNW	1044.	1044.	3.852E-05	2.904E-05	1044.	1.691E-04	1.275E-04

Byron Site Meteorological Data 1/78 - 12/87

Note: Based on Reference 2 of Section F.2 and the formulas in Sections B.5 and B.6 of Appendix B.

Approximate distance from midpoint between gasous effluent release points.

Table F-7 (Continued)

Maximum Offsite Finite Plume Gamma Dose Factors Based on 1 cm Depth at the Unrestricted Area Boundary for Kr-85m

Downwind Direction	Unrestricted Area Bound (meters)	Mixed Mode(Vent) Release Radius (meters)	V (mrad/yr)/(uCi/sec)	VBAR	Ground Level Release Radius (meters)	G (mrad/yr)/(uCi/sec)	GBAR
N	1875.	1875.	2.177E-04	2.094E-04	1875.	6.403E-04	6.143E-04
NNE	1829.	1829.	2.076E-04	1.999E-04	1829.	5.544E-04	5.319E-04
NE	1585.	1585.	2.022E-04	1.947E-04	1585.	5.773E-04	5.539E-04
ENE	1234.	1234.	1.984E-04	1.911E-04	1234.	6.395E-04	6.133E-04
E	1227.	1227.	2.331E-04	2.245E-04	1227.	7.968E-04	7.640E-04
ESE	991.	991.	3.260E-04	3.138E-04	991.	1.136E-03	1.088E-03
SE	1006.	1006.	3.710E-04	3.571E-04	1006.	1.584E-03	1.517E-03
SSE	800.	800.	4.393E-04	4.223E-04	800.	2.273E-03	2.175E-03
S	945.	945.	2.813E-04	2.708E-04	945.	1.240E-03	1.188E-03
SSW	975.	975.	2.079E-04	2.002E-04	975.	8.631E-04	8.272E-04
SW	1067.	1067.	1.688E-04	1.627E-04	1067.	6.286E-04	6.027E-04
WSW	1212.	1212.	1.751E-04	1.687E-04	1212.	5.594E-04	5.366E-04
W	1189.	1189.	2.092E-04	2.013E-04	1189.	6.723E-04	6.446E-04
WNW	1227.	1227.	1.464E-04	1.409E-04	1227.	4.690E-04	4.496E-04
NW	1128.	1128.	1.926E-04	1.852E-04	1128.	6.017E-04	5.766E-04
NNW	1044.	1044.	3.126E-04	3.005E-04	1044.	9.676E-04	9.272E-04

Byron Site Meteorological Data 1/78 - 12/87

Table F-7 (Continued)

Maximum Offsite Finite Plume Gamma Dose Factors Based on 1 cm Depth at the Unrestricted Area Boundary for Kr-85

Downwind Direction	Unrestricted Area Bound (meters)	Mixed Mode(Vent) Release Radius (meters)	V (mrad/yr)/(uCi/sec)	VBAR	Ground Level Release Radius (meters)	G (mrad/yr)/(uCi/sec)	GBAR
N	1875.	1875.	2.535E-06	2.452E-06	1875.	7.318E-06	7.077E-06
NNE	1829.	1829.	2.469E-06	2.388E-06	1829.	6.382E-06	6.171E-06
NE	1585.	1585.	2.415E-06	2.335E-06	1585.	6.622E-06	6.403E-06
ENE	1234.	1234.	2.367E-06	2.289E-06	1234.	7.225E-06	6.986E-06
E	1227.	1227.	2.787E-06	2.695E-06	1227.	9.101E-06	8.801E-06
ESE	991.	991.	3.828E-06	3.702E-06	991.	1.270E-05	1.228E-05
SE	1006.	1006.	4.364E-06	4.220E-06	1006.	1.803E-05	1.743E-05
SSE	800.	800.	5.153E-06	4.983E-06	800.	2.577E-05	2.492E-05
S	945.	945.	3.321E-06	3.211E-06	945.	1.404E-05	1.358E-05
SSW	975.	975.	2.493E-06	2.411E-06	975.	9.869E-06	9.543E-06
SW	1067.	1067.	2.018E-06	1.951E-06	1067.	7.232E-06	6.993E-06
WSW	1212.	1212.	2.070E-06	2.002E-06	1212.	6.309E-06	6.100E-06
W	1189.	1189.	2.436E-06	2.356E-06	1189.	7.472E-06	7.225E-06
WNW	1227.	1227.	1.708E-06	1.652E-06	1227.	5.191E-06	5.019E-06
NW	1128.	1128.	2.238E-06	2.164E-06	1128.	6.678E-06	6.458E-06
NNW	1044.	1044.	3.579E-06	3.461E-06	1044.	1.071E-05	1.036E-05

Byron Site Meteorological Data 1/78 - 12/87

Table F-7 (Continued)

Maximum Offsite Finite Plume Gamma Dose Factors Based on 1 cm Depth at the Unrestricted Area Boundary for Kr-87

Downwind Direction	Unrestricted Area Bound (meters)	Mixed Mode(Vent) Release Radius (meters)	V (mrad/yr)/(uCi/sec)	VBAR	Ground Level Release Radius (meters)	G (mrad/yr)/(uCi/sec)	GBAR
N	1875.	1875.	7.122E-04	6.916E-04	1875.	1.811E-03	1.758E-03
NNE	1829.	1829.	6.891E-04	6.692E-04	1829.	1.555E-03	1.510E-03
NE	1585.	1585.	6.817E-04	6.620E-04	1585.	1.622E-03	1.574E-03
ENE	1234.	1234.	6.838E-04	6.641E-04	1234.	1.822E-03	1.769E-03
E	1227.	1227.	7.930E-04	7.701E-04	1227.	2.214E-03	2.149E-03
ESE	991.	991.	1.126E-03	1.094E-03	991.	3.256E-03	3.162E-03
SE	1006.	1006.	1.264E-03	1.227E-03	1006.	4.356E-03	4.229E-03
SSE	800.	800.	1.455E-03	1.413E-03	800.	6.185E-03	6.005E-03
S	945.	945.	9.680E-04	9.401E-04	945.	3.451E-03	3.350E-03
SSW	975.	975.	7.216E-04	7.008E-04	975.	2.374E-03	2.305E-03
SW	1067.	1067.	5.927E-04	5.756E-04	1067.	1.725E-03	1.675E-03
WSW	1212.	1212.	6.132E-04	5.955E-04	1212.	1.613E-03	1.566E-03
W	1189.	1189.	7.081E-04	6.877E-04	1189.	1.971E-03	1.914E-03
WNW	1227.	1227.	4.978E-04	4.834E-04	1227.	1.381E-03	1.341E-03
NW	1128.	1128.	6.517E-04	6.329E-04	1128.	1.753E-03	1.702E-03
NNW	1044.	1044.	1.040E-03	1.010E-03	1044.	2.826E-03	2.744E-03

Byron Site Meteorological Data 1/78 - 12/87

Table F-7 (Continued)

Maximum Offsite Finite Plume Gamma Dose Factors Based on 1 cm Depth at the Unrestricted Area Boundary for Kr-88

Downwind Direction	Unrestricted Area Bound (meters)	Mixed Mode(Vent) Release Radius (meters)	V (mrad/yr)/(uCi/sec)	VBAR	Ground Level Release Radius (meters)	G (mrad/yr)/(uCi/sec)	GBAR
N	1875.	1875.	1.781E-03	1.732E-03	1875.	4.631E-03	4.499E-03
NNE	1829.	1829.	1.744E-03	1.696E-03	1829.	4.012E-03	3.898E-03
NE	1585.	1585.	1.725E-03	1.677E-03	1585.	4.174E-03	4.056E-03
ENE	1234.	1234.	1.721E-03	1.674E-03	1234.	4.617E-03	4.485E-03
E	1227.	1227.	2.008E-03	1.952E-03	1227.	5.701E-03	5.538E-03
ESE	991.	991.	2.794E-03	2.717E-03	991.	8.165E-03	7.931E-03
SE	1006.	1006.	3.153E-03	3.066E-03	1006.	1.124E-02	1.092E-02
SSE	800.	800.	3.656E-03	3.554E-03	800.	1.601E-02	1.555E-02
S	945.	945.	2.414E-03	2.348E-03	945.	8.831E-03	8.577E-03
SSW	975.	975.	1.821E-03	1.771E-03	975.	6.146E-03	5.970E-03
SW	1067.	1067.	1.486E-03	1.445E-03	1067.	4.488E-03	4.360E-03
WSW	1212.	1212.	1.525E-03	1.483E-03	1212.	4.060E-03	3.944E-03
W	1189.	1189.	1.756E-03	1.707E-03	1189.	4.882E-03	4.743E-03
WNW	1227.	1227.	1.235E-03	1.201E-03	1227.	3.406E-03	3.309E-03
NW	1128.	1128.	1.611E-03	1.567E-03	1128.	4.344E-03	4.219E-03
NNW	1044.	1044.	2.548E-03	2.477E-03	1044.	6.974E-03	6.773E-03

Byron Site Meteorological Data 1/78 - 12/87

Table F-7 (Continued)

Maximum Offsite Finite Plume Gamma Dose Factors Based on 1 cm Depth at the Unrestricted Area Boundary for Kr-89

Downwind Direction	Unrestricted Area Bound (meters)	Mixed Mode(Vent) Release Radius (meters)	V (mrad/yr)/(uCi/sec)	VBAR	Ground Level Release Radius (meters)	G (mrad/yr)/(uCi/sec)	GBAR
N	1875.	1875.	3.874E-04	3.764E-04	1875.	5.119E-04	4.972E-04
NNE	1829.	1829.	3.917E-04	3.805E-04	1829.	4.514E-04	4.384E-04
NE	1585.	1585.	4.092E-04	3.975E-04	1585.	4.994E-04	4.851E-04
ENE	1234.	1234.	4.909E-04	4.769E-04	1234.	7.066E-04	6.863E-04
E	1227.	1227.	5.876E-04	5.709E-04	1227.	8.980E-04	8.723E-04
ESE	991.	991.	1.001E-03	9.729E-04	991.	1.662E-03	1.614E-03
SE	1006.	1006.	1.052E-03	1.022E-03	1006.	1.834E-03	1.782E-03
SSE	800.	800.	1.274E-03	1.237E-03	800.	2.736E-03	2.657E-03
S	945.	945.	8.388E-04	8.149E-04	945.	1.633E-03	1.586E-03
SSW	975.	975.	6.103E-04	5.929E-04	975.	1.138E-03	1.105E-03
SW	1067.	1067.	4.877E-04	4.738E-04	1067.	8.395E-04	8.154E-04
WSW	1212.	1212.	4.748E-04	4.612E-04	1212.	7.570E-04	7.353E-04
W	1189.	1189.	5.142E-04	4.995E-04	1189.	8.490E-04	8.246E-04
WNW	1227.	1227.	3.590E-04	3.488E-04	1227.	5.905E-04	5.735E-04
NW	1128.	1128.	5.205E-04	5.057E-04	1128.	8.806E-04	8.553E-04
NNW	1044.	1044.	9.408E-04	9.139E-04	1044.	1.738E-03	1.688E-03

Byron Site Meteorological Data 1/78 - 12/87

Table F-7 (Continued)

Maximum Offsite Finite Plume Gamma Dose Factors Based on 1 cm Depth at the Unrestricted Area Boundary for Kr-90

Downwind Direction	Unrestricted Area Bound (meters)	Mixed Mode(Vent) Release Radius (meters)	V (mrad/yr)/(uCi/sec)	VBAR	Ground Level Release Radius (meters)	G (mrad/yr)/(uCi/sec)	GBAR
N	1875.	1875.	5.729E-06	5.558E-06	1875.	2.499E-06	2.423E-06
NNE	1829.	1829.	6.704E-06	6.504E-06	1829.	3.550E-06	3.443E-06
NE	1585.	1585.	8.897E-06	8.631E-06	1585.	5.093E-06	4.939E-06
ENE	1234.	1234.	2.065E-05	2.004E-05	1234.	1.415E-05	1.372E-05
E	1227.	1227.	3.111E-05	3.018E-05	1227.	2.640E-05	2.560E-05
ESE	991.	991.	8.428E-05	8.175E-05	991.	7.903E-05	7.663E-05
SE	1006.	1006.	7.483E-05	7.259E-05	1006.	6.589E-05	6.389E-05
SSE	800.	800.	1.281E-04	1.242E-04	800.	1.367E-04	1.325E-04
S	945.	945.	6.382E-05	6.191E-05	945.	6.374E-05	6.181E-05
SSW	975.	975.	4.060E-05	3.938E-05	975.	3.621E-05	3.511E-05
SW	1067.	1067.	2.851E-05	2.765E-05	1067.	2.698E-05	2.616E-05
WSW	1212.	1212.	2.087E-05	2.025E-05	1212.	1.563E-05	1.516E-05
W	1189.	1189.	2.105E-05	2.042E-05	1189.	8.775E-06	8.509E-06
WNW	1227.	1227.	1.541E-05	1.495E-05	1227.	8.279E-06	8.028E-06
NW	1128.	1128.	2.698E-05	2.618E-05	1128.	1.614E-05	1.565E-05
NNW	1044.	1044.	6.070E-05	5.888E-05	1044.	4.455E-05	4.320E-05

Byron Site Meteorological Data 1/78 - 12/87

Table F-7 (Continued)

Maximum Offsite Finite Plume Gamma Dose Factors Based on 1 cm Depth at the Unrestricted Area Boundary for Xe-131m

Downwind Direction	Unrestricted Area Bound (meters)	Mixed Mode(Vent) Release Radius (meters)	V (mrad/yr)/(uCi/sec)	VBAR	Ground Level Release Radius (meters)	G (mrad/yr)/(uCi/sec)	GBAR
N	1875.	1875.	2.385E-05	1.897E-05	1875.	9.757E-05	7.6[illegible]0E-05
NNE	1829.	1829.	2.062E-05	1.650E-05	1829.	8.424E-05	6.6[illegible]8E-05
NE	1585.	1585.	1.931E-05	1.548E-05	1585.	8.807E-05	6.9[illegible]6E-05
ENE	1234.	1234.	1.814E-05	1.458E-05	1234.	1.003E-04	7.8[illegible]0E-05
E	1227.	1227.	2.206E-05	1.770E-05	1227.	1.290E-04	1.0[illegible]9E-04
ESE	991.	991.	3.255E-05	2.600E-05	991.	1.885E-04	1.4[illegible]2E-04
SE	1006.	1006.	3.838E-05	3.061E-05	1006.	2.741E-04	2.1[illegible]9E-04
SSE	800.	800.	5.287E-05	4.185E-05	800.	4.308E-04	3.3[illegible]1E-04
S	945.	945.	2.861E-05	2.284E-05	945.	2.140E-04	1.6[illegible]0E-04
SSW	975.	975.	1.939E-05	1.557E-05	975.	1.451E-04	1.1[illegible]4E-04
SW	1067.	1067.	1.511E-05	1.216E-05	1067.	1.030E-04	8.0[illegible]0E-05
WSW	1212.	1212.	1.568E-05	1.261E-05	1212.	8.542E-05	6.6[illegible]4E-05
W	1189.	1189.	2.220E-05	1.768E-05	1189.	1.056E-04	8.2[illegible]2E-05
WNW	1227.	1227.	1.534E-05	1.222E-05	1227.	7.423E-05	5.8[illegible]6E-05
NW	1128.	1128.	2.119E-05	1.684E-05	1128.	9.904E-05	7.7[illegible]6E-05
NNW	1044.	1044.	3.749E-05	2.966E-05	1044.	1.610E-04	1.2[illegible]7E-04

Byron Site Meteorological Data 1/78 - 12/87

Table F-7 (Continued)

Maximum Offsite Finite Plume Gamma Dose Factors Based on 1 cm Depth at the Unrestricted Area Boundary for Xe-133m

Downwind Direction	Unrestricted Area Bound (meters)	Mixed Mode(Vent) Release Radius (meters)	V (mrad/yr)/(uCi/sec)	VBAR (mrad/yr)/(uCi/sec)	Ground Level Release Radius (meters)	G (mrad/yr)/(uCi/sec)	GBAR (mrad/yr)/(uCi/sec)
N	1875.	1875.	5.052E-05	4.463E-05	1875.	1.779E-04	1.53[illegible]E-04
NNE	1829.	1829.	4.621E-05	4.113E-05	1829.	1.541E-04	1.331E-04
NE	1585.	1585.	4.420E-05	3.946E-05	1585.	1.606E-04	1.38[illegible]E-04
ENE	1234.	1234.	4.244E-05	3.799E-05	1234.	1.799E-04	1.54[illegible]E-04
E	1227.	1227.	5.072E-05	4.530E-05	1227.	2.292E-04	1.97[illegible]E-04
ESE	991.	991.	7.221E-05	6.419E-05	991.	3.291E-04	2.82[illegible]E-04
SE	1006.	1006.	8.369E-05	7.422E-05	1006.	4.733E-04	4.04[illegible]E-04
SSE	800.	800.	1.068E-04	9.370E-05	800.	7.166E-04	6.08[illegible]E-04
S	945.	945.	6.295E-05	5.589E-05	945.	3.693E-04	3.15[illegible]E-04
SSW	975.	975.	4.488E-05	4.011E-05	975.	2.539E-04	2.17[illegible]E-04
SW	1067.	1067.	3.574E-05	3.203E-05	1067.	1.825E-04	1.56[illegible]E-04
WSW	1212.	1212.	3.697E-05	3.312E-05	1212.	1.549E-04	1.33[illegible]E-04
W	1189.	1189.	4.767E-05	4.218E-05	1189.	1.883E-04	1.61[illegible]E-04
WNW	1227.	1227.	3.316E-05	2.937E-05	1227.	1.318E-04	1.13[illegible]E-04
NW	1128.	1128.	4.462E-05	3.938E-05	1128.	1.731E-04	1.48[illegible]E-04
NNW	1044.	1044.	7.543E-05	6.613E-05	1044.	2.800E-04	2.39[illegible]E-04

Byron Site Meteorological Data 1/78 - 12/87

Table F-7 (Continued)

Maximum Offsite Finite Plume Gamma Dose Factors Based on 1 cm Depth at the Unrestricted Area Boundary for Xe-133

Downwind Direction	Unrestricted Area Bound (meters)	Mixed Mode(Vent) Release Radius (meters)	V (mrad/yr)/(uCi/sec)	VBAR	Ground Level Release Radius (meters)	G (mrad/yr)/(uCi/sec)	GBAR
N	1875.	1875.	5.651E-05	5.145E-05	1875.	2.014E-04	1.806E-04
NNE	1829.	1829.	5.150E-05	4.714E-05	1829.	1.746E-04	1.566E-04
NE	1585.	1585.	4.921E-05	4.513E-05	1585.	1.820E-04	1.631E-04
ENE	1234.	1234.	4.702E-05	4.320E-05	1234.	2.030E-04	1.816E-04
E	1227.	1227.	5.610E-05	5.145E-05	1227.	2.582E-04	2.306E-04
ESE	991.	991.	7.996E-05	7.309E-05	991.	3.684E-04	3.281E-04
SE	1006.	1006.	9.261E-05	8.450E-05	1006.	5.287E-04	4.702E-04
SSE	800.	800.	1.173E-04	1.061E-04	800.	7.899E-04	6.981E-04
S	945.	945.	6.950E-05	6.347E-05	945.	4.122E-04	3.665E-04
SSW	975.	975.	4.942E-05	4.534E-05	975.	2.848E-04	2.538E-04
SW	1067.	1067.	3.944E-05	3.627E-05	1067.	2.054E-04	1.834E-04
WSW	1212.	1212.	4.094E-05	3.764E-05	1212.	1.751E-04	1.569E-04
W	1189.	1189.	5.295E-05	4.825E-05	1189.	2.119E-04	1.893E-04
WNW	1227.	1227.	3.679E-05	3.354E-05	1227.	1.481E-04	1.322E-04
NW	1128.	1128.	4.943E-05	4.494E-05	1128.	1.938E-04	1.726E-04
NNW	1044.	1044.	8.376E-05	7.580E-05	1044.	3.130E-04	2.786E-04

Byron Site Meteorological Data 1/78 - 12/87

Table F-7 (Continued)

Maximum Offsite Finite Plume Gamma Dose Factors Based on 1 cm Depth at the Unrestricted Area Boundary for Xe-135m

Downwind Direction	Unrestricted Area Bound (meters)	Mixed Mode(Vent) Release Radius (meters)	V (mrad/yr)/(uCi/sec)	VBAR	Ground Level Release Radius (meters)	G (mrad/yr)/(uCi/sec)	GBAR
N	1875.	1875.	3.355E-04	3.238E-04	1875.	7.574E-04	7.301E-04
NNE	1829.	1829.	3.191E-04	3.080E-04	1829.	6.353E-04	6.124E-04
NE	1585.	1585.	3.171E-04	3.061E-04	1585.	6.645E-04	6.406E-04
ENE	1234.	1234.	3.275E-04	3.162E-04	1234.	7.919E-04	7.633E-04
E	1227.	1227.	3.794E-04	3.663E-04	1227.	9.382E-04	9.043E-04
ESE	991.	991.	5.722E-04	5.524E-04	991.	1.502E-03	1.448E-03
SE	1006.	1006.	6.280E-04	6.062E-04	1006.	1.826E-03	1.759E-03
SSE	800.	800.	7.139E-04	6.889E-04	800.	2.546E-03	2.452E-03
S	945.	945.	4.850E-04	4.682E-04	945.	1.505E-03	1.450E-03
SSW	975.	975.	3.539E-04	3.416E-04	975.	1.019E-03	9.817E-04
SW	1067.	1067.	2.924E-04	2.823E-04	1067.	7.378E-04	7.111E-04
WSW	1212.	1212.	3.058E-04	2.952E-04	1212.	7.396E-04	7.129E-04
W	1189.	1189.	3.530E-04	3.407E-04	1189.	9.316E-04	8.978E-04
WNW	1227.	1227.	2.475E-04	2.389E-04	1227.	6.545E-04	6.307E-04
NW	1128.	1128.	3.325E-04	3.208E-04	1128.	8.492E-04	8.183E-04
NNW	1044.	1044.	5.542E-04	5.346E-04	1044.	1.425E-03	1.373E-03

Byron Site Meteorological Data 1/78 - 12/87

Table F-7 (Continued)

Maximum Offsite Finite Plume Gamma Dose Factors Based on 1 cm Depth at the Unrestricted Area Boundary for Xe-135

Downwind Direction	Unrestricted Area Bound (meters)	Mixed Mode(Vent) Release Radius (meters)	V (mrad/yr)/(uCi/sec)	VBAR	Ground Level Release Radius (meters)	G (mrad/yr)/(uCi/sec)	GBAR
N	1875.	1875.	2.998E-04	2.898E-04	1875.	8.831E-04	8.532E-04
NNE	1829.	1829.	2.878E-04	2.783E-04	1829.	7.672E-04	7.412E-04
NE	1585.	1585.	2.805E-04	2.713E-04	1585.	7.977E-04	7.707E-04
ENE	1234.	1234.	2.749E-04	2.658E-04	1234.	8.772E-04	8.475E-04
E	1227.	1227.	3.233E-04	3.126E-04	1227.	1.099E-03	1.061E-03
ESE	991.	991.	4.486E-04	4.337E-04	991.	1.549E-03	1.496E-03
SE	1006.	1006.	5.112E-04	4.942E-04	1006.	2.178E-03	2.104E-03
SSE	800.	800.	6.045E-04	5.843E-04	800.	3.113E-03	3.006E-03
S	945.	945.	3.878E-04	3.749E-04	945.	1.701E-03	1.643E-03
SSW	975.	975.	2.880E-04	2.785E-04	975.	1.190E-03	1.150E-03
SW	1067.	1067.	2.337E-04	2.260E-04	1067.	8.696E-04	8.400E-04
WSW	1212.	1212.	2.415E-04	2.335E-04	1212.	7.667E-04	7.407E-04
W	1189.	1189.	2.873E-04	2.778E-04	1189.	9.146E-04	8.835E-04
WNW	1227.	1227.	2.012E-04	1.945E-04	1227.	6.366E-04	6.150E-04
NW	1128.	1128.	2.641E-04	2.553E-04	1128.	8.175E-04	7.896E-04
NNW	1044.	1044.	4.267E-04	4.124E-04	1044.	1.313E-03	1.268E-03

Byron Site Meteorological Data 1/78 - 12/87

Table F-7 (Continued)

Maximum Offsite Finite Plume Gamma Dose Factors Based on 1 cm Depth at the Unrestricted Area Boundary for Xe-137

Downwind Direction	Unrestricted Area Bound (meters)	Mixed Mode(Vent) Release Radius (meters)	V (mrad/yr)/(uCi/sec)	VBAR	Ground Level Release Radius (meters)	G (mrad/yr)/(uCi/sec)	GBAR
N	1875.	1875.	6.403E-05	6.197E-05	1875.	9.597E-05	9.28[illegible]E-05
NNE	1829.	1829.	6.358E-05	6.153E-05	1829.	8.275E-05	8.00[illegible]E-05
NE	1585.	1585.	6.560E-05	6.348E-05	1585.	9.063E-05	8.77[illegible]E-05
ENE	1234.	1234.	7.607E-05	7.362E-05	1234.	1.243E-04	1.20[illegible]E-04
E	1227.	1227.	9.065E-05	8.773E-05	1227.	1.555E-04	1.50[illegible]E-04
ESE	991.	991.	1.509E-04	1.461E-04	991.	2.805E-04	2.71[illegible]E-04
SE	1006.	1006.	1.596E-04	1.544E-04	1006.	3.144E-04	3.04[illegible]E-04
SSE	800.	800.	1.905E-04	1.843E-04	800.	4.627E-04	4.47[illegible]E-04
S	945.	945.	1.267E-04	1.226E-04	945.	2.775E-04	2.68[illegible]E-04
SSW	975.	975.	9.229E-05	8.932E-05	975.	1.933E-04	1.87[illegible]E-04
SW	1067.	1067.	7.424E-05	7.185E-05	1067.	1.418E-04	1.37[illegible]E-04
WSW	1212.	1212.	7.355E-05	7.118E-05	1212.	1.309E-04	1.26[illegible]E-04
W	1189.	1189.	8.087E-05	7.827E-05	1189.	1.518E-04	1.46[illegible]E-04
WNW	1227.	1227.	5.651E-05	5.469E-05	1227.	1.056E-04	1.02[illegible]E-04
NW	1128.	1128.	8.102E-05	7.841E-05	1128.	1.535E-04	1.48[illegible]E-04
NNW	1044.	1044.	1.454E-04	1.407E-04	1044.	2.944E-04	2.84[illegible]E-04

Byron Site Meteorological Data 1/78 - 12/87

Table F-7 (Continued)

Maximum Offsite Finite Plume Gamma Dose Factors Based on 1 cm Depth at the Unrestricted Area Boundary for Xe-138

Downwind Direction	Unrestricted Area Bound (meters)	Mixed Mode(Vent) Release Radius (meters)	V (mrad/yr)/(uCi/sec)	VBAR	Ground Level Release Radius (meters)	G (mrad/yr)/(uCi/sec)	GBAR
N	1875.	1875.	7.317E-04	7.106E-04	1875.	1.559E-03	1.513E-03
NNE	1829.	1829.	7.040E-04	6.836E-04	1829.	1.310E-03	1.271E-03
NE	1585.	1585.	7.054E-04	6.850E-04	1585.	1.371E-03	1.330E-03
ENE	1234.	1234.	7.357E-04	7.145E-04	1234.	1.634E-03	1.586E-03
E	1227.	1227.	8.489E-04	8.244E-04	1227.	1.936E-03	1.879E-03
ESE	991.	991.	1.282E-03	1.245E-03	991.	3.103E-03	3.012E-03
SE	1006.	1006.	1.402E-03	1.362E-03	1006.	3.755E-03	3.644E-03
SSE	800.	800.	1.589E-03	1.543E-03	800.	5.212E-03	5.058E-03
S	945.	945.	1.089E-03	1.058E-03	945.	3.103E-03	3.012E-03
SSW	975.	975.	7.991E-04	7.761E-04	975.	2.107E-03	2.046E-03
SW	1067.	1067.	6.618E-04	6.427E-04	1067.	1.531E-03	1.487E-03
WSW	1212.	1212.	6.871E-04	6.674E-04	1212.	1.535E-03	1.490E-03
W	1189.	1189.	7.811E-04	7.586E-04	1189.	1.925E-03	1.869E-03
WNW	1227.	1227.	5.482E-04	5.324E-04	1227.	1.351E-03	1.311E-03
NW	1128.	1128.	7.355E-04	7.142E-04	1128.	1.756E-03	1.704E-03
NNW	1044.	1044.	1.215E-03	1.180E-03	1044.	2.955E-03	2.868E-03

Byron Site Meteorological Data 1/78 - 12/87

Table F-7 (Continued)

Maximum Offsite Finite Plume Gamma Dose Factors Based on 1 cm Depth at the Unrestricted Area Boundary for Ar-41

Downwind Direction	Unrestricted Area Bound (meters)	Mixed Mode(Vent) Release Radius (meters)	V (mrad/yr)/(uCi/sec)	VBAR (mrad/yr)/(uCi/sec)	Ground Level Release Radius (meters)	G (mrad/yr)/(uCi/sec)	GBAR (mrad/yr)/(uCi/sec)
N	1875.	1875.	1.120E-03	1.084E-03	1875.	2.935E-03	2.842E-03
NNE	1829.	1829.	1.085E-03	1.050E-03	1829.	2.531E-03	2.450E-03
NE	1585.	1585.	1.071E-03	1.037E-03	1585.	2.637E-03	2.553E-03
ENE	1234.	1234.	1.069E-03	1.035E-03	1234.	2.943E-03	2.849E-03
E	1227.	1227.	1.244E-03	1.205E-03	1227.	3.609E-03	3.493E-03
ESE	991.	991.	1.753E-03	1.697E-03	991.	5.240E-03	5.072E-03
SE	1006.	1006.	1.975E-03	1.912E-03	1006.	7.123E-03	6.895E-03
SSE	800.	800.	2.290E-03	2.216E-03	800.	1.015E-02	9.828E-03
S	945.	945.	1.510E-03	1.462E-03	945.	5.616E-03	5.436E-03
SSW	975.	975.	1.128E-03	1.092E-03	975.	3.884E-03	3.759E-03
SW	1067.	1067.	9.228E-04	8.933E-04	1067.	2.826E-03	2.735E-03
WSW	1212.	1212.	9.527E-04	9.222E-04	1212.	2.594E-03	2.511E-03
W	1189.	1189.	1.105E-03	1.070E-03	1189.	3.148E-03	3.047E-03
WNW	1227.	1227.	7.765E-04	7.517E-04	1227.	2.201E-03	2.131E-03
NW	1128.	1128.	1.016E-03	9.837E-04	1128.	2.803E-03	2.713E-03
NNW	1044.	1044.	1.621E-03	1.570E-03	1044.	4.510E-03	4.366E-03

Byron Site Meteorological Data 1/78 - 12/87

Table F-7a

Maximum Offsite Finite Plume Gamma Dose Factors Based on 1 cm Depth at the Restricted Area Boundary for Kr-83m

Downwind Direction	Restricted Area Bound (meters)	Mixed Mode(Vent) Release Radius (meters)	V (mrad/yr)/(uCi/sec)	VBAR	Ground Level Release Radius (meters)	G (mrad/yr)/(uCi/sec)	GBAR
N	777.	777.	7.987E-05	6.022E-05	777.	3.877E-04	2.924E-04
NNE	538.	538.	1.059E-04	7.984E-05	538.	5.665E-04	4.272E-04
NE	528.	528.	8.271E-05	6.236E-05	528.	4.960E-04	3.740E-04
ENE	474.	474.	6.500E-05	4.901E-05	474.	4.605E-04	3.473E-04
E	468.	468.	8.031E-05	6.056E-05	468.	5.867E-04	4.424E-04
ESE	480.	480.	8.935E-05	6.737E-05	480.	6.039E-04	4.553E-04
SE	427.	427.	1.280E-04	9.653E-05	427.	1.044E-03	7.870E-04
SSE	410.	410.	1.377E-04	1.038E-04	410.	1.210E-03	9.125E-04
S	295.	295.	1.466E-04	1.106E-04	295.	1.295E-03	9.767E-04
SSW	299.	299.	9.895E-05	7.461E-05	299.	9.128E-04	6.883E-04
SW	451.	451.	4.721E-05	3.560E-05	451.	4.002E-04	3.017E-04
WSW	386.	386.	7.311E-05	5.513E-05	386.	5.291E-04	3.989E-04
W	379.	379.	1.136E-04	8.566E-05	379.	6.476E-04	4.883E-04
WNW	385.	385.	7.998E-05	6.031E-05	385.	4.644E-04	3.501E-04
NW	445.	445.	8.088E-05	6.098E-05	445.	4.352E-04	3.281E-04
NNW	658.	658.	7.548E-05	5.691E-05	658.	3.486E-04	2.629E-04

Byron Site Meteorological Data 1/78 - 12/87

Note: Based on Reference 2 of Section F.2 and the formulas in Sections B.5 and B.6 of Appendix B.

Approximate distance from midpoint between gaseous effluent release points.

Table F-7a (Continued)

Maximum Offsite Finite Plume Gamma Dose Factors Based on 1 cm Depth at the Restricted Area Boundary for Kr-85m

Downwind Direction	Restricted Area Bound (meters)	Mixed Mode(Vent) Release Radius (meters)	V (mrad/yr)/(uCi/sec)	VBAR (mrad/yr)/(uCi/sec)	Ground Level Release Radius (meters)	G (mrad/yr)/(uCi/sec)	GBAR (mrad/yr)/(uCi/sec)
N	777.	777.	5.990E-04	5.755E-04	777.	2.015E-03	1.929E-03
NNE	538.	538.	8.304E-04	7.980E-04	538.	2.732E-03	2.614E-03
NE	528.	528.	6.981E-04	6.712E-04	528.	2.441E-03	2.335E-03
ENE	474.	474.	5.790E-04	5.569E-04	474.	2.225E-03	2.129E-03
E	468.	468.	6.841E-04	6.578E-04	468.	2.791E-03	2.669E-03
ESE	480.	480.	7.377E-04	7.092E-04	480.	2.893E-03	2.767E-03
SE	427.	427.	9.807E-04	9.423E-04	427.	4.780E-03	4.569E-03
SSE	410.	410.	9.459E-04	9.080E-04	410.	5.323E-03	5.084E-03
S	295.	295.	1.046E-03	1.005E-03	295.	5.472E-03	5.226E-03
SSW	299.	299.	7.854E-04	7.549E-04	299.	3.979E-03	3.801E-03
SW	451.	451.	4.441E-04	4.273E-04	451.	1.962E-03	1.876E-03
WSW	386.	386.	6.265E-04	6.025E-04	386.	2.485E-03	2.376E-03
W	379.	379.	7.731E-04	7.421E-04	379.	2.912E-03	2.784E-03
WNW	385.	385.	5.485E-04	5.266E-04	385.	2.058E-03	1.967E-03
NW	445.	445.	5.566E-04	5.344E-04	445.	1.973E-03	1.886E-03
NNW	658.	658.	5.330E-04	5.118E-04	658.	1.750E-03	1.675E-03

Byron Site Meteorological Data 1/78 - 12/87

Table F-7a (Continued)

Maximum Offsite Finite Plume Gamma Dose Factors Based on 1 cm Depth at the Restricted Area Boundary for Kr-85

Downwind Direction	Restricted Area Bound (meters)	Mixed Mode(Vent) Release Radius (meters)	V (mrad/yr)/(uCi/sec)	VBAR	Ground Level Release Radius (meters)	G (mrad/yr)/(uCi/sec)	GBAR
N	777.	777.	6.818E-06	6.593E-06	777.	2.207E-05	2.134E-05
NNE	538.	538.	9.568E-06	9.252E-06	538.	2.971E-05	2.873E-05
NE	528.	528.	8.107E-06	7.840E-06	528.	2.658E-05	2.570E-05
ENE	474.	474.	6.771E-06	6.547E-06	474.	2.418E-05	2.330E-05
E	468.	468.	7.994E-06	7.730E-06	468.	3.044E-05	2.944E-05
ESE	480.	480.	8.548E-06	8.266E-06	480.	3.147E-05	3.043E-05
SE	427.	427.	1.133E-05	1.095E-05	427.	5.222E-05	5.050E-05
SSE	410.	410.	1.090E-05	1.054E-05	410.	5.839E-05	5.647E-05
S	295.	295.	1.207E-05	1.168E-05	295.	5.918E-05	5.723E-05
SSW	299.	299.	9.177E-06	8.874E-06	299.	4.315E-05	4.173E-05
SW	451.	451.	5.220E-06	5.048E-06	451.	2.153E-05	2.082E-05
WSW	386.	386.	7.292E-06	7.051E-06	386.	2.687E-05	2.590E-05
W	379.	379.	8.828E-06	8.537E-06	379.	3.134E-05	3.031E-05
WNW	385.	385.	6.276E-06	6.069E-06	385.	2.212E-05	2.139E-05
NW	445.	445.	6.362E-06	6.152E-06	445.	2.130E-05	2.060E-05
NNW	658.	658.	6.046E-06	5.847E-06	658.	1.907E-05	1.844E-05

Byron Site Meteorological Data 1/78 - 12/87

Table F-7a (Continued)

Maximum Offsite Finite Plume Gamma Dose Factors Based on 1 cm Depth at the Restricted Area Boundary for Kr-87

Downwind Direction	Restricted Area Bound (meters)	Mixed Mode(Vent) Release Radius (meters)	V (mrad/yr)/(uCi/sec)	VBAR	Ground Level Release Radius (meters)	G (mrad/yr)/(uCi/sec)	GBAR
N	777.	777.	2.002E-03	1.944E-03	777.	5.942E-03	5.769E-03
NNE	538.	538.	2.849E-03	2.767E-03	538.	8.120E-03	7.884E-03
NE	528.	528.	2.424E-03	2.354E-03	528.	7.237E-03	7.027E-03
ENE	474.	474.	2.043E-03	1.984E-03	474.	6.613E-03	6.421E-03
E	468.	468.	2.396E-03	2.327E-03	468.	8.197E-03	7.959E-03
ESE	480.	480.	2.576E-03	2.501E-03	480.	8.565E-03	8.316E-03
SE	427.	427.	3.393E-03	3.295E-03	427.	1.390E-02	1.353E-02
SSE	410.	410.	3.189E-03	3.097E-03	410.	1.530E-02	1.486E-02
S	295.	295.	3.653E-03	3.547E-03	295.	1.622E-02	1.575E-02
SSW	299.	299.	2.789E-03	2.709E-03	299.	1.174E-02	1.140E-02
SW	451.	451.	1.587E-03	1.541E-03	451.	5.709E-03	5.543E-03
WSW	386.	386.	2.232E-03	2.168E-03	386.	7.443E-03	7.227E-03
W	379.	379.	2.657E-03	2.580E-03	379.	8.790E-03	8.534E-03
WNW	385.	385.	1.894E-03	1.839E-03	385.	6.229E-03	6.048E-03
NW	445.	445.	1.907E-03	1.852E-03	445.	5.919E-03	5.747E-03
NNW	658.	658.	1.783E-03	1.731E-03	658.	5.192E-03	5.041E-03

Byron Site Meteorological Data 1/78 - 12/87

Table F-7a (Continued)

Maximum Offsite Finite Plume Gamma Dose Factors Based on 1 cm Depth at the Restricted Area Boundary for Kr-88

Downwind Direction	Restricted Area Bound (meters)	Mixed Mode(Vent) Release Radius (meters)	V (mrad/yr)/(uCi/sec)	VBAR	Ground Level Release Radius (meters)	G (mrad/yr)/(uCi/sec)	GBAR
N	777.	777.	4.873E-03	4.737E-03	777.	1.449E-02	1.407E-02
NNE	538.	538.	6.949E-03	6.756E-03	538.	1.964E-02	1.907E-02
NE	528.	528.	5.936E-03	5.771E-03	528.	1.755E-02	1.704E-02
ENE	474.	474.	5.009E-03	4.870E-03	474.	1.599E-02	1.553E-02
E	468.	468.	5.889E-03	5.726E-03	468.	1.998E-02	1.940E-02
ESE	480.	480.	6.284E-03	6.109E-03	480.	2.076E-02	2.016E-02
SE	427.	427.	8.282E-03	8.050E-03	427.	3.413E-02	3.313E-02
SSE	410.	410.	7.838E-03	7.618E-03	410.	3.785E-02	3.674E-02
S	295.	295.	8.882E-03	8.634E-03	295.	3.917E-02	3.802E-02
SSW	299.	299.	6.829E-03	6.639E-03	299.	2.846E-02	2.763E-02
SW	451.	451.	3.896E-03	3.788E-03	451.	1.403E-02	1.363E-02
WSW	386.	386.	5.427E-03	5.276E-03	386.	1.787E-02	1.735E-02
W	379.	379.	6.431E-03	6.251E-03	379.	2.097E-02	2.036E-02
WNW	385.	385.	4.584E-03	4.455E-03	385.	1.483E-02	1.440E-02
NW	445.	445.	4.622E-03	4.492E-03	445.	1.419E-02	1.378E-02
NNW	658.	658.	4.324E-03	4.203E-03	658.	1.258E-02	1.222E-02

Byron Site Meteorological Data 1/78 - 12/87

Table F-7a (Continued)

Maximum Offsite Finite Plume Gamma Dose Factors Based on 1 cm Depth at the Restricted Area Boundary for Kr-89

Downwind Direction	Restricted Area Bound (meters)	Mixed Mode(Vent) Release Radius (meters)	V (mrad/yr)/(uCi/sec)	VBAR (mrad/yr)/(uCi/sec)	Ground Level Release Radius (meters)	G (mrad/yr)/(uCi/sec)	GBAR (mrad/yr)/(uCi/sec)
N	777.	777.	2.235E-03	2.171E-03	777.	4.669E-03	4.535E-03
NNE	538.	538.	3.749E-03	3.641E-03	538.	7.948E-03	7.720E-03
NE	528.	528.	3.089E-03	3.001E-03	528.	6.626E-03	6.436E-03
ENE	474.	474.	2.645E-03	2.569E-03	474.	6.153E-03	5.976E-03
E	468.	468.	3.102E-03	3.014E-03	468.	7.427E-03	7.213E-03
ESE	480.	480.	3.404E-03	3.306E-03	480.	7.840E-03	7.614E-03
SE	427.	427.	4.486E-03	4.358E-03	427.	1.176E-02	1.142E-02
SSE	410.	410.	3.890E-03	3.779E-03	410.	1.141E-02	1.108E-02
S	295.	295.	5.518E-03	5.360E-03	295.	1.743E-02	1.693E-02
SSW	299.	299.	4.137E-03	4.019E-03	299.	1.248E-02	1.212E-02
SW	451.	451.	2.136E-03	2.075E-03	451.	5.197E-03	5.047E-03
WSW	386.	386.	3.333E-03	3.238E-03	386.	8.487E-03	8.243E-03
W	379.	379.	3.832E-03	3.722E-03	379.	1.037E-02	1.007E-02
WNW	385.	385.	2.751E-03	2.672E-03	385.	7.432E-03	7.218E-03
NW	445.	445.	2.651E-03	2.576E-03	445.	6.506E-03	6.319E-03
NNW	658.	658.	2.158E-03	2.097E-03	658.	4.738E-03	4.602E-03

Byron Site Meteorological Data 1/78 - 12/87

Table F-7a (Continued)

Maximum Offsite Finite Plume Gamma Dose Factors Based on 1 cm Depth at the Restricted Area Boundary for Kr-90

Downwind Direction	Restricted Area Bound (meters)	Mixed Mode(Vent) Release Radius (meters)	V (mrad/yr)/(uCi/sec)	VBAR	Ground Level Release Radius (meters)	G (mrad/yr)/(uCi/sec)	GBAR
N	777.	777.	2.920E-04	2.833E-04	777.	2.777E-04	2.693E-04
NNE	538.	538.	9.216E-04	8.940E-04	538.	1.070E-03	1.033E-03
NE	528.	528.	6.927E-04	6.720E-04	528.	8.049E-04	7.803E-04
ENE	474.	474.	6.455E-04	6.262E-04	474.	8.222E-04	7.971E-04
E	468.	468.	8.493E-04	8.239E-04	468.	1.189E-03	1.153E-03
ESE	480.	480.	9.079E-04	8.807E-04	480.	1.223E-03	1.185E-03
SE	427.	427.	1.268E-03	1.230E-03	427.	1.855E-03	1.793E-03
SSE	410.	410.	1.055E-03	1.024E-03	410.	1.699E-03	1.643E-03
S	295.	295.	2.202E-03	2.136E-03	295.	4.311E-03	4.172E-03
SSW	299.	299.	1.624E-03	1.575E-03	299.	3.114E-03	3.017E-03
SW	451.	451.	5.560E-04	5.393E-04	451.	8.707E-04	8.441E-04
WSW	386.	386.	1.053E-03	1.021E-03	386.	1.701E-03	1.649E-03
W	379.	379.	1.099E-03	1.066E-03	379.	1.610E-03	1.561E-03
WNW	385.	385.	8.138E-04	7.894E-04	385.	1.195E-03	1.158E-03
NW	445.	445.	6.789E-04	6.585E-04	445.	9.080E-04	8.802E-04
NNW	658.	658.	3.357E-04	3.256E-04	658.	3.703E-04	3.590E-04

Byron Site Meteorological Data 1/78 - 12/87

Table F-7a (Continued)

Maximum Offsite Finite Plume Gamma Dose Factors Based on 1 cm Depth at the Restricted Area Boundary for Xe-131m

Downwind Direction	Restricted Area Bound (meters)	Mixed Mode(Vent) Release Radius (meters)	V (mrad/yr)/(uCi/sec)	VBAR	Ground Level Release Radius (meters)	G (mrad/yr)/(uCi/sec)	GBAR
N	777.	777.	7.605E-05	5.999E-05	777.	3.587E-04	2.793E-04
NNE	538.	538.	1.013E-04	8.007E-05	538.	5.146E-04	4.000E-04
NE	528.	528.	8.079E-05	6.401E-05	528.	4.534E-04	3.526E-04
ENE	474.	474.	6.397E-05	5.081E-05	474.	4.180E-04	3.249E-04
E	468.	468.	7.840E-05	6.215E-05	468.	5.378E-04	4.177E-04
ESE	480.	480.	8.641E-05	6.842E-05	480.	5.499E-04	4.272E-04
SE	427.	427.	1.224E-04	9.663E-05	427.	9.585E-04	7.436E-04
SSE	410.	410.	1.316E-04	1.034E-04	410.	1.120E-03	8.677E-04
S	295.	295.	1.379E-04	1.086E-04	295.	1.157E-03	8.957E-04
SSW	299.	299.	9.485E-05	7.499E-05	299.	8.215E-04	6.366E-04
SW	451.	451.	4.713E-05	3.751E-05	451.	3.728E-04	2.897E-04
WSW	386.	386.	7.042E-05	5.586E-05	386.	4.741E-04	3.682E-04
W	379.	379.	1.053E-04	8.276E-05	379.	5.723E-04	4.441E-04
WNW	385.	385.	7.411E-05	5.829E-05	385.	4.086E-04	3.169E-04
NW	445.	445.	7.532E-05	5.923E-05	445.	3.878E-04	3.009E-04
NNW	658.	658.	7.089E-05	5.580E-05	658.	3.187E-04	2.480E-04

Byron Site Meteorological Data 1/78 - 12/87

Table F-7a (Continued)

Maximum Offsite Finite Plume Gamma Dose Factors Based on 1 cm Depth at the Restricted Area Boundary for Xe-133m

Downwind Direction	Restricted Area Bound (meters)	Mixed Mode(Vent) Release Radius (meters)	V (mrad/yr)/(uCi/sec)	VBAR	Ground Level Release Radius (meters)	G (mrad/yr)/(uCi/sec)	GBAR
N	777.	777.	1.485E-04	1.296E-04	777.	6.051E-04	5.152E-04
NNE	538.	538.	2.017E-04	1.766E-04	538.	8.473E-04	7.182E-04
NE	528.	528.	1.653E-04	1.452E-04	528.	7.508E-04	6.371E-04
ENE	474.	474.	1.340E-04	1.182E-04	474.	6.889E-04	5.840E-04
E	468.	468.	1.612E-04	1.418E-04	468.	8.788E-04	7.638E-04
ESE	480.	480.	1.755E-04	1.541E-04	480.	9.024E-04	7.644E-04
SE	427.	427.	2.410E-04	2.105E-04	427.	1.544E-03	1.303E-03
SSE	410.	410.	2.464E-04	2.136E-04	410.	1.774E-03	1.493E-03
S	295.	295.	2.641E-04	2.298E-04	295.	1.822E-03	1.531E-03
SSW	299.	299.	1.897E-04	1.662E-04	299.	1.306E-03	1.100E-03
SW	451.	451.	1.008E-04	8.916E-05	451.	6.134E-04	5.199E-04
WSW	386.	386.	1.459E-04	1.284E-04	386.	7.755E-04	6.565E-04
W	379.	379.	1.985E-04	1.722E-04	379.	9.246E-04	7.807E-04
WNW	385.	385.	1.402E-04	1.217E-04	385.	6.573E-04	5.546E-04
NW	445.	445.	1.425E-04	1.237E-04	445.	6.270E-04	5.296E-04
NNW	658.	658.	1.353E-04	1.176E-04	658.	5.321E-04	4.522E-04

Byron Site Meteorological Data 1/78 - 12/87

Table F-7a (Continued)

Maximum Offsite Finite Plume Gamma Dose Factors Based on 1 cm Depth at the Restricted Area Boundary for Xe-133

Downwind Direction	Restricted Area Bound (meters)	Mixed Mode(Vent) Release Radius (meters)	V (mrad/yr)/(uCi/sec)	VBAR	Ground Level Release Radius (meters)	G (mrad/yr)/(uCi/sec)	GBAR
N	777.	777.	1.640E-04	1.478E-04	777.	6.691E-04	5.926E-04
NNE	538.	538.	2.206E-04	1.991E-04	538.	9.273E-04	8.176E-04
NE	528.	528.	1.807E-04	1.636E-04	528.	8.231E-04	7.271E-04
ENE	474.	474.	1.459E-04	1.324E-04	474.	7.544E-04	6.653E-04
E	468.	468.	1.752E-04	1.586E-04	468.	9.594E-04	8.448E-04
ESE	480.	480.	1.915E-04	1.732E-04	480.	9.866E-04	8.693E-04
SE	427.	427.	2.615E-04	2.357E-04	427.	1.674E-03	1.470E-03
SSE	410.	410.	2.657E-04	2.379E-04	410.	1.909E-03	1.671E-03
S	295.	295.	2.831E-04	2.541E-04	295.	1.954E-03	1.708E-03
SSW	299.	299.	2.034E-04	1.834E-04	299.	1.407E-03	1.233E-03
SW	451.	451.	1.097E-04	9.976E-05	451.	6.715E-04	5.920E-04
WSW	386.	386.	1.584E-04	1.435E-04	386.	8.466E-04	7.455E-04
W	379.	379.	2.144E-04	1.922E-04	379.	1.003E-03	8.812E-04
WNW	385.	385.	1.512E-04	1.356E-04	385.	7.116E-04	6.246E-04
NW	445.	445.	1.541E-04	1.382E-04	445.	6.805E-04	5.979E-04
NNW	658.	658.	1.486E-04	1.335E-04	658.	5.860E-04	5.180E-04

Byron Site Meteorological Data 1/78 - 12/87

Table F-7a (Continued)

Maximum Offsite Finite Plume Gamma Dose Factors Based on 1 cm Depth at the Restricted Area Boundary for Xe-135m

Downwind Direction	Restricted Area Bound (meters)	Mixed Mode(Vent) Release Radius (meters)	V (mrad/yr)/(uCi/sec)	VBAR	Ground Level Release Radius (meters)	G (mrad/yr)/(uCi/sec)	GBAR
N	777.	777.	1.114E-03	1.074E-03	777.	3.170E-03	3.053E-03
NNE	538.	538.	1.604E-03	1.548E-03	538.	4.526E-03	4.358E-03
NE	528.	528.	1.341E-03	1.294E-03	528.	3.963E-03	3.817E-03
ENE	474.	474.	1.127E-03	1.087E-03	474.	3.655E-03	3.519E-03
E	468.	468.	1.313E-03	1.267E-03	468.	4.389E-03	4.226E-03
ESE	480.	480.	1.445E-03	1.394E-03	480.	4.682E-03	4.508E-03
SE	427.	427.	1.901E-03	1.833E-03	427.	7.254E-03	6.984E-03
SSE	410.	410.	1.722E-03	1.661E-03	410.	7.557E-03	7.273E-03
S	295.	295.	2.104E-03	2.029E-03	295.	9.119E-03	8.775E-03
SSW	299.	299.	1.569E-03	1.514E-03	299.	6.478E-03	6.235E-03
SW	451.	451.	8.760E-04	8.455E-04	451.	2.948E-03	2.839E-03
WSW	386.	386.	1.289E-03	1.244E-03	386.	4.307E-03	4.147E-03
W	379.	379.	1.552E-03	1.496E-03	379.	5.247E-03	5.050E-03
WNW	385.	385.	1.107E-03	1.067E-03	385.	3.752E-03	3.611E-03
NW	445.	445.	1.103E-03	1.064E-03	445.	3.446E-03	3.317E-03
NNW	658.	658.	1.013E-03	9.770E-04	658.	2.866E-03	2.760E-03

Byron Site Meteorological Data 1/78 - 12/87

Table F-7a (Continued)

Maximum Offsite Finite Plume Gamma Dose Factors Based on 1 cm Depth at the Restricted Area Boundary for Xe-135

Downwind Direction	Restricted Area Bound (meters)	Mixed Mode(Vent) Release Radius (meters)	V (mrad/yr)/(uCi/sec)	VBAR	Ground Level Release Radius (meters)	G (mrad/yr)/(uCi/sec)	GBAR
N	777.	777.	8.146E-04	7.873E-04	777.	2.715E-03	2.622E-03
NNE	538.	538.	1.131E-03	1.093E-03	538.	3.662E-03	3.535E-03
NE	528.	528.	9.534E-04	9.215E-04	528.	3.273E-03	3.162E-03
ENE	474.	474.	7.918E-04	7.654E-04	474.	2.982E-03	2.879E-03
E	468.	468.	9.350E-04	9.038E-04	468.	3.745E-03	3.616E-03
ESE	480.	480.	1.006E-03	9.723E-04	480.	3.877E-03	3.743E-03
SE	427.	427.	1.335E-03	1.290E-03	427.	6.410E-03	6.188E-03
SSE	410.	410.	1.286E-03	1.243E-03	410.	7.141E-03	6.892E-03
S	295.	295.	1.420E-03	1.373E-03	295.	7.284E-03	7.030E-03
SSW	299.	299.	1.070E-03	1.035E-03	299.	5.309E-03	5.125E-03
SW	451.	451.	6.081E-04	5.878E-04	451.	2.641E-03	2.550E-03
WSW	386.	386.	8.542E-04	8.257E-04	386.	3.319E-03	3.205E-03
W	379.	379.	1.047E-03	1.011E-03	379.	3.877E-03	3.742E-03
WNW	385.	385.	7.428E-04	7.178E-04	385.	2.737E-03	2.642E-03
NW	445.	445.	7.543E-04	7.288E-04	445.	2.631E-03	2.540E-03
NNW	658.	658.	7.230E-04	6.987E-04	658.	2.351E-03	2.270E-03

Byron Site Meteorological Data 1/78 - 12/87

Table F-7a (Continued)

Maximum Offsite Finite Plume Gamma Dose Factors Based on 1 cm Depth at the Restricted Area Boundary for Xe-137

Downwind Direction	Restricted Area Bound (meters)	Mixed Mode(Vent) Release Radius (meters)	V (mrad/yr)/(uCi/sec)	VBAR	Ground Level Release Radius (meters)	G (mrad/yr)/(uCi/sec)	GBAR
N	777.	777.	3.338E-04	3.230E-04	777.	7.619E-04	7.372E-04
NNE	538.	538.	5.395E-04	5.221E-04	538.	1.250E-03	1.209E-03
NE	528.	528.	4.433E-04	4.290E-04	528.	1.050E-03	1.016E-03
ENE	474.	474.	3.764E-04	3.643E-04	474.	9.728E-04	9.413E-04
E	468.	468.	4.417E-04	4.275E-04	468.	1.168E-03	1.130E-03
ESE	480.	480.	4.860E-04	4.703E-04	480.	1.237E-03	1.197E-03
SE	427.	427.	6.397E-04	6.190E-04	427.	1.856E-03	1.796E-03
SSE	410.	410.	5.573E-04	5.393E-04	410.	1.813E-03	1.755E-03
S	295.	295.	7.699E-04	7.450E-04	295.	2.671E-03	2.584E-03
SSW	299.	299.	5.740E-04	5.555E-04	299.	1.901E-03	1.840E-03
SW	451.	451.	3.015E-04	2.918E-04	451.	8.062E-04	7.801E-04
WSW	386.	386.	4.678E-04	4.527E-04	386.	1.303E-03	1.261E-03
W	379.	379.	5.469E-04	5.292E-04	379.	1.602E-03	1.550E-03
WNW	385.	385.	3.920E-04	3.793E-04	385.	1.148E-03	1.111E-03
NW	445.	445.	3.807E-04	3.684E-04	445.	1.012E-03	9.792E-04
NNW	658.	658.	3.194E-04	3.090E-04	658.	7.568E-04	7.322E-04

Byron Site Meteorological Data 1/78 - 12/87

Table F-7a (Continued)

Maximum Offsite Finite Plume Gamma Dose Factors Based on 1 cm Depth at the Restricted Area Boundary for Xe-138

Downwind Direction	Restricted Area Bound (meters)	Mixed Mode(Vent) Release Radius (meters)	V (mrad/yr)/(uCi/sec)	VBAR	Ground Level Release Radius (meters)	G (mrad/yr)/(uCi/sec)	GBAR
N	777.	777.	2.446E-03	2.375E-03	777.	6.577E-03	6.383E-03
NNE	538.	538.	3.565E-03	3.462E-03	538.	9.407E-03	9.129E-03
NE	528.	528.	3.004E-03	2.917E-03	528.	8.231E-03	7.988E-03
ENE	474.	474.	2.542E-03	2.469E-03	474.	7.585E-03	7.361E-03
E	468.	468.	2.950E-03	2.864E-03	468.	9.089E-03	8.820E-03
ESE	480.	480.	3.242E-03	3.148E-03	480.	9.708E-03	9.421E-03
SE	427.	427.	4.245E-03	4.122E-03	427.	1.497E-02	1.453E-02
SSE	410.	410.	3.820E-03	3.709E-03	410.	1.552E-02	1.506E-02
S	295.	295.	4.720E-03	4.583E-03	295.	1.888E-02	1.832E-02
SSW	299.	299.	3.548E-03	3.445E-03	299.	1.341E-02	1.301E-02
SW	451.	451.	1.990E-03	1.933E-03	451.	6.108E-03	5.928E-03
WSW	386.	386.	2.911E-03	2.827E-03	386.	8.964E-03	8.699E-03
W	379.	379.	3.444E-03	3.344E-03	379.	1.092E-02	1.060E-02
WNW	385.	385.	2.461E-03	2.389E-03	385.	7.814E-03	7.582E-03
NW	445.	445.	2.446E-03	2.375E-03	445.	7.166E-03	6.954E-03
NNW	658.	658.	2.224E-03	2.159E-03	658.	5.956E-03	5.780E-03

Byron Site Meteorological Data 1/78 - 12/87

Table F-7a (Continued)

Maximum Offsite Finite Plume Gamma Dose Factors Based on 1 cm Depth at the Restricted Area Boundary for Ar-41

Downwind Direction	Restricted Area Bound (meters)	Mixed Mode(Vent) Release Radius (meters)	V (mrad/yr)/(uCi/sec)	VBAR	Ground Level Release Radius (meters)	G (mrad/yr)/(uCi/sec)	GBAR
N	777.	777.	3.113E-03	3.013E-03	777.	9.438E-03	9.136E-03
NNE	538.	538.	4.416E-03	4.275E-03	538.	1.286E-02	1.244E-02
NE	528.	528.	3.755E-03	3.635E-03	528.	1.147E-02	1.110E-02
ENE	474.	474.	3.160E-03	3.059E-03	474.	1.047E-02	1.013E-02
E	468.	468.	3.711E-03	3.592E-03	468.	1.304E-02	1.262E-02
ESE	480.	480.	3.982E-03	3.855E-03	480.	1.358E-02	1.314E-02
SE	427.	427.	5.255E-03	5.086E-03	427.	2.224E-02	2.152E-02
SSE	410.	410.	4.973E-03	4.814E-03	410.	2.457E-02	2.379E-02
S	295.	295.	5.645E-03	5.464E-03	295.	2.571E-02	2.489E-02
SSW	299.	299.	4.306E-03	4.168E-03	299.	1.865E-02	1.805E-02
SW	451.	451.	2.450E-03	2.371E-03	451.	9.118E-03	8.826E-03
WSW	386.	386.	3.437E-03	3.327E-03	386.	1.174E-02	1.137E-02
W	379.	379.	4.108E-03	3.976E-03	379.	1.382E-02	1.338E-02
WNW	385.	385.	2.926E-03	2.833E-03	385.	9.788E-03	9.475E-03
NW	445.	445.	2.952E-03	2.857E-03	445.	9.334E-03	9.036E-03
NNW	658.	658.	2.769E-03	2.681E-03	658.	8.224E-03	7.961E-03

Byron Site Meteorological Data 1/78 - 12/87

Supplemental Table A

Mixed Mode Joint Frequency Distribution Table Summaries

250 Foot Elevation Data

Summary Table of Percent by Direction and Class

Class	N	NNE	NE	ENE	E	ESE	SE	SSE	S	SSW	SW	WSW	W	WNW	NW	NNW	Total
A	.252	.214	.229	.246	.231	.171	.178	.162	.291	.322	.310	.233	.211	.249	.286	.204	3.789
B	.158	.133	.133	.134	.088	.074	.069	.107	.156	.202	.174	.145	.139	.136	.170	.161	2.179
C	.217	.153	.183	.190	.155	.096	.126	.172	.238	.276	.252	.172	.223	.259	.313	.233	3.257
D	2.282	1.781	1.668	2.200	1.661	1.053	1.130	1.665	2.243	2.433	2.265	1.833	2.399	2.669	2.856	2.436	32.575
E	1.052	.909	.837	1.019	1.303	.911	1.120	1.405	2.257	2.475	2.028	1.599	1.601	1.728	1.908	1.283	23.437
F	.360	.320	.301	.257	.442	.459	.561	.657	1.015	1.056	.683	.450	.436	.516	.635	.461	8.608
G	.218	.141	.134	.113	.160	.199	.289	.323	.315	.342	.333	.241	.139	.153	.181	.188	3.469
Total	4.539	3.652	3.484	4.158	4.040	2.962	3.474	4.492	6.515	7.106	6.045	4.673	5.148	5.710	6.350	4.966	77.315

Summary Table of Percent by Direction and Speed

Speed	N	NNE	NE	ENE	E	ESE	SE	SSE	S	SSW	SW	WSW	W	WNW	NW	NNW	Total
.45	.000	.021	.006	.000	.006	.000	.000	.000	.010	.019	.014	.006	.030	.000	.016	.017	.144
1.05	.049	.040	.037	.020	.034	.026	.021	.015	.019	.040	.038	.056	.041	.060	.057	.037	.590
2.05	.233	.179	.209	.226	.174	.146	.157	.148	.177	.201	.214	.196	.245	.270	.247	.198	3.220
3.05	.446	.368	.428	.487	.404	.306	.335	.377	.395	.464	.496	.436	.431	.466	.507	.467	6.813
4.05	.612	.561	.478	.493	.425	.338	.379	.406	.486	.584	.689	.571	.570	.593	.643	.593	8.420
5.05	.772	.636	.537	.591	.475	.373	.400	.497	.690	.749	.892	.720	.715	.879	.978	.751	10.655
6.05	.753	.625	.574	.648	.543	.391	.473	.632	.799	.976	1.000	.826	.863	.997	1.264	.994	12.358
8.05	1.174	.893	.775	1.027	1.206	.794	.961	1.257	1.986	2.289	1.783	1.299	1.471	1.608	1.780	1.403	21.708
10.05	.431	.282	.377	.591	.689	.485	.653	.932	1.573	1.492	.774	.479	.648	.694	.720	.448	11.268
13.05	.070	.046	.063	.075	.085	.104	.095	.228	.379	.291	.146	.085	.132	.143	.137	.058	2.138
18.00	.000	.000	.000	.000	.000	.000	.000	.000	.000	.000	.000	.000	.000	.000	.000	.000	.000
99.00	.000	.000	.000	.000	.000	.000	.000	.000	.000	.000	.000	.000	.000	.000	.000	.000	.000
Total	4.539	3.652	3.484	4.158	4.040	2.962	3.474	4.492	6.515	7.106	6.045	4.673	5.148	5.710	6.350	4.966	77.315

NOTE: Wind directions in tables are presented in "wind from" and not "wind to" direction.

In order to determine the final mixed mode values, 77.315% of the elevated value (presented in the 250 FT Mixed Mode table) and 22.685% of the ground level value (presented in the 30 FT Mixed Mode table) are used to calculate the final values.

Supplemental Table A - Continued

Mixed Mode Joint Frequency Distribution Table Summaries

250 Foot Elevation Data

Summary Table of Percent by Speed and Class

Class Speed	A	B	C	D	E	F	G
.45	.000	.000	.001	.039	.041	.032	.031
1.05	.007	.006	.020	.225	.160	.076	.097
2.05	.118	.079	.138	1.518	.812	.341	.214
3.05	.384	.268	.367	3.212	1.535	.618	.428
4.05	.599	.293	.453	3.697	2.053	.831	.493
5.05	.601	.363	.513	4.424	3.032	1.210	.511
6.05	.597	.374	.519	4.948	3.975	1.481	.464
8.05	.901	.496	.769	8.786	7.260	2.652	.844
10.05	.474	.243	.397	4.699	3.830	1.263	.362
13.05	.107	.057	.079	1.027	.740	.105	.024
18.00	.000	.000	.000	.000	.000	.000	.000
99.00	.000	.000	.000	.000	.000	.000	.000

Supplemental Table A - Continued

Mixed Mode Joint Frequency Distribution Table Summaries

30 Foot Elevation Data

Summary Table of Percent by Direction and Class

Class	N	NNE	NE	ENE	E	ESE	SE	SSE	S	SSW	SW	WSW	W	WNW	NW	NNW	Total
A	.046	.051	.047	.035	.045	.030	.036	.047	.085	.135	.096	.072	.068	.087	.083	.058	1.023
B	.035	.033	.029	.031	.023	.011	.018	.026	.053	.077	.055	.043	.031	.046	.043	.041	.594
C	.046	.034	.048	.051	.034	.028	.026	.035	.073	.096	.072	.050	.060	.068	.088	.057	.866
D	.714	.465	.502	.604	.443	.329	.328	.560	.848	.830	.688	.499	.810	.984	.921	.725	10.251
E	.236	.198	.155	.234	.370	.285	.391	.825	1.190	.987	.631	.328	.378	.404	.414	.282	7.310
F	.062	.041	.020	.043	.158	.133	.188	.360	.385	.162	.077	.056	.063	.075	.086	.101	2.012
G	.019	.009	.007	.014	.052	.055	.086	.093	.107	.054	.017	.006	.013	.016	.032	.049	.630
Total	1.158	.831	.808	1.011	1.127	.872	1.073	1.947	2.741	2.341	1.636	1.055	1.424	1.681	1.666	1.314	22.685

Summary Table of Percent by Direction and Speed

Speed	N	NNE	NE	ENE	E	ESE	SE	SSE	S	SSW	SW	WSW	W	WNW	NW	NNW	Total
.45	.005	.005	.003	.000	.000	.000	.001	.001	.001	.003	.004	.003	.003	.002	.003	.013	.047
1.05	.015	.004	.007	.005	.009	.004	.004	.006	.008	.009	.013	.012	.014	.022	.037	.038	.207
2.05	.067	.034	.018	.030	.067	.045	.044	.048	.097	.108	.099	.071	.084	.101	.134	.130	1.177
3.05	.136	.109	.066	.109	.232	.158	.165	.225	.295	.205	.156	.111	.116	.133	.164	.145	2.524
4.05	.174	.153	.128	.160	.265	.168	.221	.372	.429	.246	.207	.155	.151	.156	.214	.195	3.393
5.05	.151	.113	.122	.161	.184	.110	.173	.364	.416	.271	.212	.149	.144	.164	.209	.192	3.136
6.05	.129	.094	.102	.138	.155	.104	.139	.296	.390	.298	.224	.119	.158	.172	.183	.160	2.861
8.05	.232	.142	.192	.253	.184	.167	.208	.437	.722	.651	.417	.222	.284	.411	.381	.253	5.156
10.05	.181	.115	.132	.128	.030	.085	.092	.166	.311	.409	.221	.125	.242	.321	.273	.145	2.976
13.05	.050	.060	.033	.027	.001	.030	.025	.028	.072	.133	.080	.063	.180	.162	.068	.041	1.054
18.00	.017	.001	.004	.000	.000	.001	.001	.002	.000	.008	.004	.026	.045	.038	.001	.002	.150
99.00	.000	.000	.000	.000	.000	.000	.000	.000	.000	.000	.000	.000	.002	.000	.000	.000	.002
Total	1.158	.831	.808	1.011	1.127	.872	1.073	1.947	2.741	2.341	1.636	1.055	1.424	1.681	1.666	1.314	22.685

NOTE: Wind directions in tables are presented in "wind from" and not "wind to" direction.

Supplemental Table A - Continued

Mixed Mode Joint Frequency Distribution Table Summaries

30 Foot Elevation Data

Summary Table of Percent by Speed and Class

Class Speed	A	B	C	D	E	F	G
.45	.000	.000	.000	.003	.007	.015	.022
1.05	.000	.000	.000	.006	.047	.083	.066
2.05	.002	.002	.009	.092	.479	.420	.174
3.05	.050	.028	.034	.521	1.110	.590	.192
4.05	.130	.078	.102	1.213	1.251	.489	.129
5.05	.157	.087	.137	1.368	1.109	.245	.032
6.05	.140	.079	.120	1.362	1.058	.095	.008
8.05	.289	.173	.251	2.861	1.514	.062	.007
10.05	.177	.116	.142	1.972	.564	.006	.000
13.05	.075	.031	.053	.735	.159	.001	.000
18.00	.004	.000	.018	.117	.012	.000	.000
99.00	.000	.000	.001	.001	.000	.000	.000

Supplemental Table B

Ground Level Joint Frequency Distribution Table Summaries

Summary Table of Percent by Direction and Class

Class	N	NNE	NE	ENE	E	ESE	SE	SSE	S	SSW	SW	WSW	W	WNW	NW	NNW	Total
A	.289	.317	.301	.244	.249	.190	.198	.197	.335	.454	.408	.318	.268	.342	.383	.302	4.792
B	.190	.187	.178	.158	.125	.065	.079	.130	.193	.268	.227	.193	.171	.192	.202	.210	2.767
C	.269	.226	.252	.218	.190	.118	.152	.189	.302	.364	.306	.218	.272	.317	.397	.328	4.118
D	3.298	2.327	2.338	2.684	1.992	1.334	1.365	2.172	3.012	3.140	2.915	2.275	3.055	3.615	3.969	3.357	42.847
E	1.466	1.198	.988	1.331	1.661	1.226	1.472	2.553	3.628	3.107	2.414	1.710	1.995	1.980	2.316	1.719	30.766
F	.504	.318	.185	.276	.699	.648	.803	1.293	1.732	.881	.499	.408	.476	.499	.646	.751	10.619
G	.202	.091	.061	.099	.253	.250	.355	.400	.624	.396	.159	.078	.131	.160	.312	.520	4.091
Total	6.217	4.663	4.304	5.011	5.169	3.830	4.424	6.933	9.826	8.609	6.929	5.200	6.367	7.105	8.225	7.186	100.000

Summary Table of Percent by Direction and Speed

Speed	N	NNE	NE	ENE	E	ESE	SE	SSE	S	SSW	SW	WSW	W	WNW	NW	NNW	Total
.45	.098	.099	.078	.030	.009	.000	.014	.032	.046	.045	.040	.030	.067	.042	.138	.211	.978
1.05	.308	.154	.125	.137	.121	.093	.090	.090	.127	.137	.205	.229	.265	.339	.503	.536	3.459
2.05	.939	.602	.458	.594	.843	.606	.598	.605	1.008	1.072	1.002	.839	.905	.995	1.305	1.265	13.635
3.05	1.164	1.030	.779	.981	1.468	1.075	1.093	1.478	1.982	1.467	1.292	.930	1.005	1.157	1.388	1.186	19.476
4.05	1.179	1.024	.878	.995	1.243	.831	1.027	1.727	2.110	1.421	1.240	.997	1.024	1.035	1.342	1.214	19.286
5.05	.839	.631	.658	.798	.724	.474	.652	1.254	1.636	1.250	1.038	.781	.813	.906	1.141	.971	14.566
6.05	.612	.467	.496	.589	.417	.313	.418	.803	1.153	1.094	.859	.546	.786	.813	.867	.761	10.995
8.05	.755	.437	.612	.695	.310	.313	.405	.735	1.319	1.461	.898	.595	.915	1.177	1.090	.797	12.518
10.05	.253	.157	.183	.165	.032	.093	.103	.180	.374	.517	.270	.164	.350	.436	.378	.203	3.857
13.05	.053	.061	.034	.027	.001	.031	.025	.028	.072	.136	.081	.064	.190	.166	.071	.041	1.081
18.00	.016	.001	.004	.000	.000	.001	.001	.002	.000	.008	.004	.026	.045	.038	.001	.002	.150
99.00	.000	.000	.000	.000	.000	.000	.000	.000	.000	.000	.000	.000	.002	.000	.000	.000	.002
Total	6.217	4.663	4.304	5.011	5.169	3.830	4.424	6.933	9.826	8.609	6.929	5.200	6.367	7.105	8.225	7.186	100.000

NOTE: Wind directions in tables are presented in "wind from" and not "wind to" direction.

Supplemental Table B -Continued

Ground Level Joint Frequency Distribution Table Summaries

Summary Table of Percent by Speed and Class

Class Speed	A	B	C	D	E	F	G
.45	.004	.001	.000	.095	.257	.275	.346
1.05	.018	.012	.027	.508	1.035	1.080	.780
2.05	.286	.171	.246	3.256	5.028	3.228	1.419
3.05	.744	.428	.616	6.258	7.173	3.272	.985
4.05	.992	.581	.781	8.165	6.404	1.902	.460
5.05	.909	.506	.808	7.302	4.357	.607	.077
6.05	.712	.388	.613	6.167	2.938	.164	.013
8.05	.819	.500	.755	7.616	2.734	.081	.011
10.05	.230	.150	.196	2.606	.667	.009	.000
13.05	.075	.032	.055	.755	.161	.001	.000
18.00	.004	.000	.018	.117	.012	.000	.000
99.00	.000	.000	.001	.001	.000	.000	.000

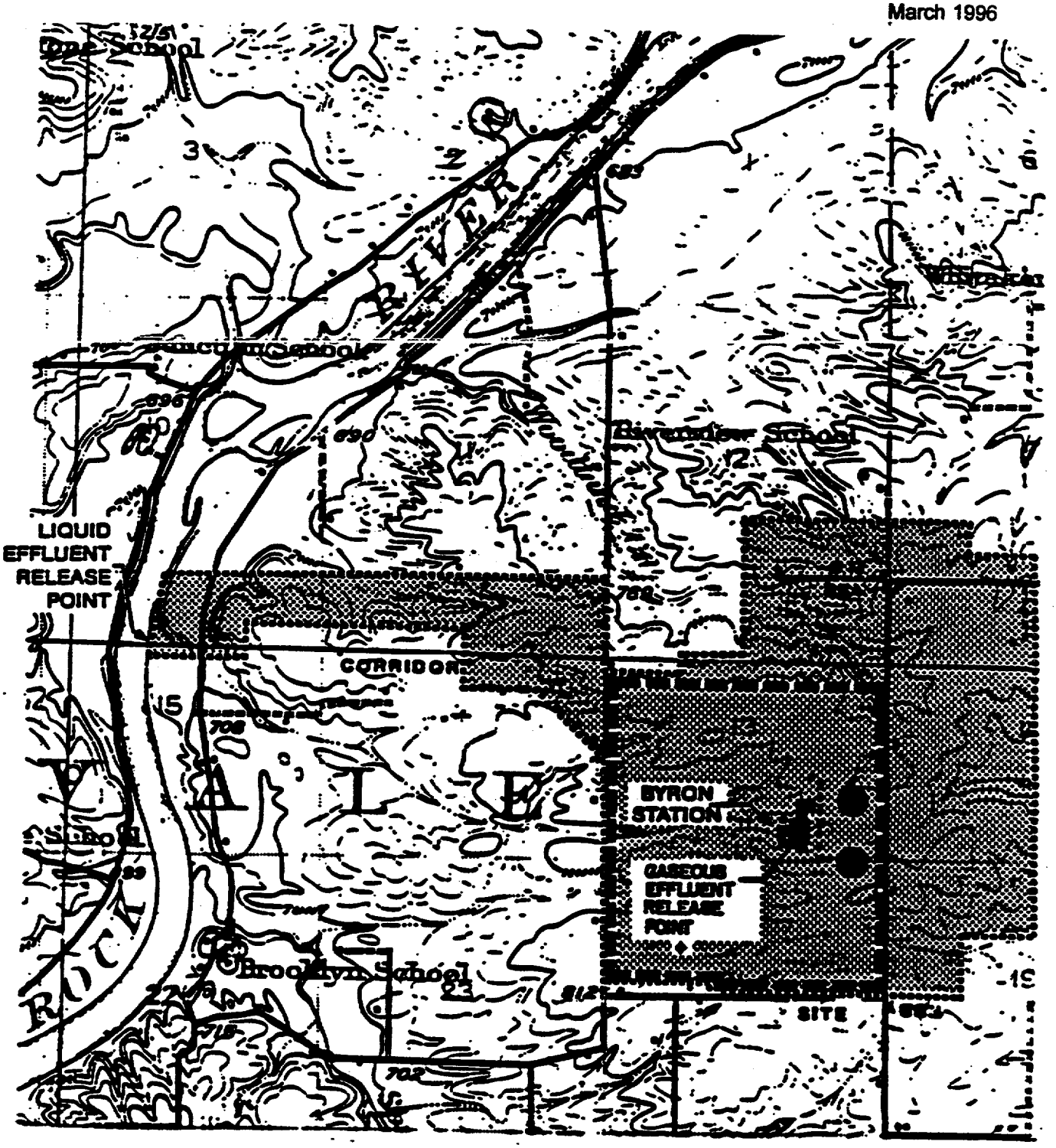

0 1/2 1 KM

0 1/2 1 MILE

■ ■ ■ Exclusion Area Boundary

····· Site Boundary

◆ Meteorological Tower

OFFSITE DOSE CALCULATION MANUAL
BYRON STATION

FIGURE F-1

Site Boundary

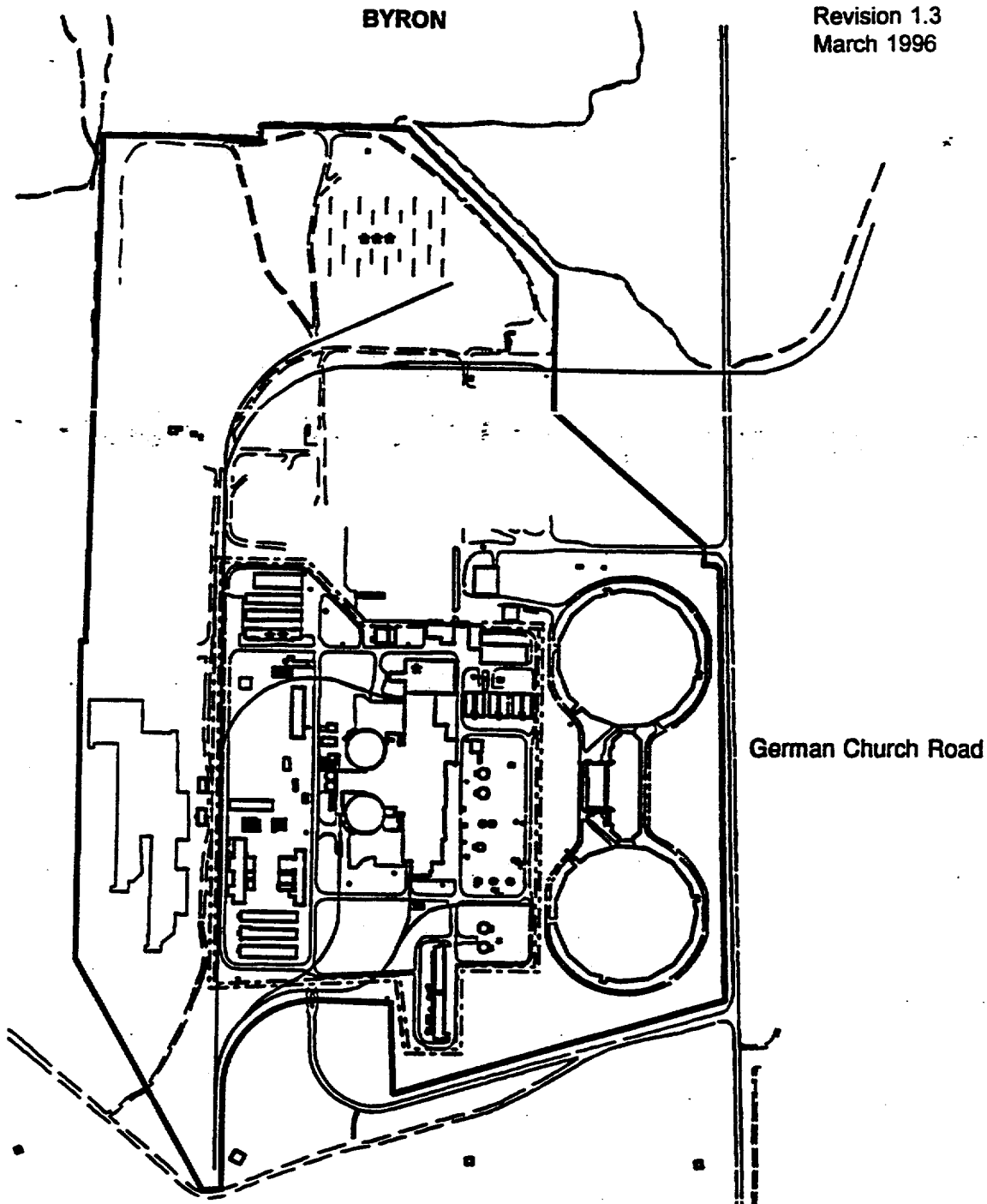

* Future Process Radwaste Storage Building

** DAW Building (Warehouse #3)

*** Future DAW & 48 Pack Locations

— Restricted Area Boundary

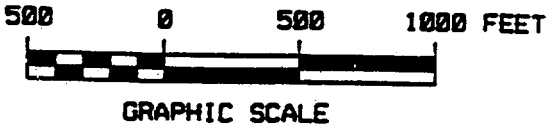

OFFSITE DOSE CALCULATION MANUAL
BYRON STATION

FIGURE F-2
RESTRICTED AREA BOUNDARY

DRESDEN STATION

Dresden Station
Chapter 10 Change Summary
ODCM Revision 2.0, March 1999

Page or Section	Change Description
10-i	Updated revision number.
10-7	In section 10.2.1.3 changed wording to reflect the fact that the Floor Drain Sample Tanks can be directly discharged into discharge canal. In section 10.2.2.1 changed the wording from "The monitor is used to monitor all releases..." to "The monitor is used to monitor releases...". Monitor operability requirements are given in ODCM Table 12.2-1, and there are allowances for discharges without a monitor operable. In section 10.2.2.1 added wording about the other possible discharge pathways which could be monitored by liquid radwaste effluent monitor prior to being discharged into the discharge canal.
10-13	Revised Figure 10-3 to show the presence of "portable waste treatment systems". Portable treatment systems have the flexibility to connect at various locations in the radwaste system for discharge to the river.

Dresden Station
Chapter 10 Change Summary
ODCM Revision 2.1, July 1999

Page or Section	Change Description
10-i	Updated the revision number, date and file designator.
10-ii	Added Table of Contents entry to Section 10.1.2.7. "Chemical Cleaning Building Chimney Monitor."
10-iii	Deleted Table of Contents entries to Section 10.2.2.3. "Chemical Cleaning Facility Service Water Effluent Monitor" and Section 10.2.3.1.3. "Chemical Cleaning Facility Service Water Effluent Monitor."
10-1.1	In Step 10.1.1., "System Description," added the Chemical Cleaning Building Chimney as a principal release point for Unit 1.
10-3	Added Section 10.1.2.7, "Chemical Cleaning Building Chimney Monitor."
10-6	In Step 10.1.3.5, "HVAC Flow Rates," changed Unit 1 Chimney Air Flow value from 1.76E9 cc/min to 9.46E8 cc/min.
10-6	In Step 10.1.3.5, "HVAC Flow Rates," added entry for "Unit 1 Chemical Cleaning Chimney Air Flow" with a value of 1.61e9 cc/min.
10-6	In Step 10.1.4, "Allocation of Effluents from Common Release Points," added first paragraph regarding origination of effluents into the Chemical Cleaning chimney.
10-7	Deleted Step 10.2.2.3, "Chemical Cleaning Facility Service Water Effluent Monitor."
10-9	Deleted Step 10.2.3.1.3, "Chemical Cleaning Facility Service Water Effluent Monitor."

Dresden Station
Chapter 10 Change Summary
ODCM Revision 2.1, July 1999

Page or Section	Change Description
10-11	Revised Figure 10-1, "Simplified Gaseous Radwaste and Gaseous Effluent Flow Diagram," to remove Turbine Building, Reactor Sphere, Blowdown Flash Tank, Process Lab, Shop Decon Areas, Radwaste Building and Decon Building which are no longer effluent pathways for Unit 1. The Fuel Building Ventilation was added as a effluent pathway. A flow control damper connected to the Fuel Building (K-131), Fuel Building Ventilation and Wet Laundry Facility output was added. Flow rates for the Chemical Cleaning Facility, Wet Laundry Facility and Gaseous Monitoring System were added.
10-13	Revised Figure 10-3, "Simplified Liquid Radwaste Processing and Liquid Effluent Flow Diagram," to remove Unit 1 Chemical Cleaning Facility Service Water System and Unit 1 Service Water System.

DRESDEN ANNEX INDEX

CHAPTER 10

REVISION 2.1

CHAPTER 10

RADIOACTIVE EFFLUENT TREATMENT AND MONITORING

TABLE OF CONTENTS

PAGE

10.1 AIRBORNE RELEASES 10-1

1. System Description 10-1
   1. Condenser Offgas Treatment System 10-1
   2. Ventilation Exhaust Treatment System 10-1

2. Radiation Monitors 10-2
   1. Unit 1 Chimney Monitor 10-2
   2. Units 2/3 Chimney Monitor 10-2
   3. Reactor Building Vent Stack Effluent Monitors 10-2
   4. Reactor Building Ventilation Monitors 10-3
   5. Condenser Air Ejector Monitors 10-3
   6. Isolation Condenser Vent Monitor 10-3
   7. Chemical Cleaning Building Chimney Monitor 10-3

3. Alarm and Trip Setpoints 10-3
   1. Setpoint Calculations 10-3
      1. Reactor Building Vent Monitors 10-3
      2. Condenser Air Ejector Monitors 10-3
      3. Units 2/3 Plant Chimney Radiation Monitor 10-3

   2. Release Limits 10-4
   3. Release Mixture 10-5
   4. Conversion Factors 10-5
   5. HVAC Flow Rates 10-6

4. Allocation of Effluents from Common Release Points 10-6

5. Dose Projections 10-6

CHAPTER 10

RADIOACTIVE EFFLUENT TREATMENT AND MONITORING

TABLE OF CONTENTS(Cont'd)

PAGE

10.2 LIQUID RELEASE 10-6

1. System Description 10-6
   1. Unit 1 Storage Tanks 10-6
   2. Units 2/3 Waste Sample Tanks 10-6
   3. Units 2/3 Floor Drain Sample Tanks 10-7
   4. Units 2/3 Waste Surge Tank 10-7

2. Radiation Monitors 10-7
   1. Liquid Radwaste Effluent Monitor 10-7
   2. Units 2 & 3 Service Water Effluent Monitors 10-7

3. Alarm and Trip Setpoints 10-8
   1. Setpoint Calculations 10-8
      1. Liquid Radwaste Effluent Monitor 10-8
      2. Units 2 & 3 Service Water Effluent Monitor 10-9

   2. Discharge Flow Rates 10-9
      1. Release Tank Discharge Flow Rate 10-9

   3. Release Limits 10-10
   4. Release Mixture 10-10
   5. Conversion Factors 10-10
   6. Liquid Dilution Flow Rates 10-10

4. Allocation of Effluents from Common Release Points 10-10

5. Projected Doses for Releases 10-10

10.3 SOLIDIFICATION OF WASTE/PROCESS CONTROL PROGRAM 10-10

CHAPTER 10

LIST OF FIGURES

NUMBER		PAGE
10-1	Simplified Gaseous Radwaste and Gaseous Effluent Flow Diagram	10-11
10-2	Simplified Gaseous Radwaste and Gaseous Effluent Flow Diagram	10-12
10-3	Simplified Liquid Radwaste Processing and Liquid Effluent Flow Diagram	10-13
10-4	Simplified Solid Radwaste Processing Diagram	10-14

CHAPTER 10

RADIOACTIVE EFFLUENT TREATMENT AND MONITORING

10.1 AIRBORNE RELEASES

10.1.1 System Description

A simplified gaseous radwaste and gaseous effluent flow diagram is provided for Dresden Unit 1 in Figure 10-1 and for Dresden Units 2 and 3 in Figure 10-2. Dresden 1 is no longer operational, but monitoring of potentially radioactive releases from the plant chimney continues.

Each airborne release point is classified as stack, vent, or ground level in accordance with the definitions in Section 4.1.4 and the results in Table A-1 of Appendix A. The principal release points for potentially radioactive airborne effluents and their classifications are as follows:

- For Dresden 1:
  - The Chemical Cleaning Building Chimney (a vent release point)
  - The plant chimney (a stack release point).
- For Dresden 2/3:
  - The ventilation chimney (a stack release point).
  - The reactor building ventilation stack (a vent release point).

10.1.1.1 Condenser Offgas Treatment System

The condenser offgas treatment system is designed and installed to reduce radioactive gaseous effluents by collecting non-condensable off-gases from the condenser and providing for holdup to reduce the total radioactivity by radiodecay prior to release to the environment. The daughter products are retained by charcoal and HEPA filters. The system is described in Section 11.3 of the Dresden UFSAR.

10.1.1.2 Ventilation Exhaust Treatment System

Ventilation exhaust treatment systems are designed and installed to reduce gaseous radioiodine or radioactive material in particulate form in selected effluent streams by passing ventilation or vent exhaust gases through charcoal absorbers and/or HEPA filters prior to release to the environment. Such a system is not considered to have any effect on noble gas effluents. The ventilation exhaust treatment systems are shown in Figures 10-1 and 10-2.

Engineered safety features atmospheric cleanup systems are not considered to be ventilation exhaust treatment system components.

10.1.2 Radiation Monitors

10.1.2.1 Unit 1 Chimney Monitor

The SPING continuously monitors the final effluent from the Unit 1 chimney.

The monitor has isokinetic sampling, gaseous grab sampling, and particulate and iodine sampling capability. Tritium samples are obtained using a portable sampling system. A tap is available for obtaining a sample from the isokinetic probe.

In normal operation all three noble gas channels (low, mid-range, high) are on line and active.

No automatic isolation or control functions are performed by this monitor.

10.1.2.2 Units 2/3 Chimney Monitor

The SPING continuously monitors the final effluent from the Units 2/3 chimney.

The monitor has isokinetic sampling, gaseous grab sampling, particulate and iodine sampling, and postaccident sampling capability. Tritium samples are obtained using a portable sampling system. A tap is available for obtaining a sample from the isokinetic probe.

In normal operation the two lower noble gas channels (low and mid-range) are on line and active. The high range noble gas channel flow is bypassed and this channel is in standby. At a predetermined threshold the low and mid-range noble gas channels are bypassed and only the high range noble gas channel remains active.

No automatic isolation or control functions are performed by this monitor. Pertinent information on this monitor is provided in the Dresden UFSAR Section 11.5.

In addition to the primary monitor described above, there is a backup system consisting of two additional detectors and sample taps in series in the primary sample stream.

10.1.2.3 Reactor Building Vent Stack Effluent Monitors

The SPING continuously monitors the final effluent from the reactor building vent stack.

The vent stack monitor has isokinetic sampling, gaseous sampling, and iodine and particulate sampling capability. Tritium samples are obtained using a portable sampling system. A tap is available for obtaining a sample from the isokinetic probe.

All channels are continuously on line and active.

No automatic isolation or control functions are performed by this monitor.

10.1.2.4 Reactor Building Ventilation Monitors

The monitor (located in the ventilation exhaust duct) monitors the effluent from the Unit 2(3) reactor building ventilation. On high alarm, the monitors automatically initiate isolation of the Unit 2(3) reactor building ventilation, and initiate startup of the Unit 2/3 standby gas treatment system.

Pertinent information on these monitors is provided in Dresden UFSAR Section 11.5.

10.1.2.5 Condenser Air Ejector Monitors

The monitors continuously monitor gross gamma activity downstream of the Unit 2 and 3 steam jet air ejector and prior to release to the main chimney.

At the trip setpoint the monitors automatically activate an interval timer which in turn initiates closure of an air operated valve, thus terminating the release.
Pertinent information on these monitors is found in Dresden UFSAR Section 11.5.

10.1.2.6 Isolation Condenser Vent Monitor

The monitor continuously monitors radioactivity in the effluent from the isolation condenser vent. No control device is initiated by this monitor.

Pertinent information on this monitor is provided in Dresden UFSAR Section 11.5.

10.1.2.7 Chemical Cleaning Building Chimney Monitor

The monitor has charcoal and particulate filters which are used to sample for iodine and particulates.

No automatic isolation, control functions or alarm functions are performed by this monitor.

10.1.3 Alarm and Trip Setpoints

10.1.3.1 Setpoint Calculations

10.1.3.1.1 Reactor Building Vent Monitors

The alarm setpoint for the reactor building vent monitor is established at 10 mr/hr.

10.1.3.1.2 Condenser Air Ejector Monitors

The high-high trip setpoint is established at ≤ 100 μCi/Sec per MWt (≅2.5E5μCi/sec) and the high alarm is established at ≤ 50μCi/sec per MWt (≅1.25E5μCi/sec).

10.1.3.1.3 Units 2/3 Plant Chimney Radiation Monitor

The setpoint is established at a count rate corresponding to no greater than 105,000 μCi/sec.

10.1.3.2 Release Limits

Alarm and trip setpoints of gaseous effluent monitors are established to ensure that the release rate limits of RETS are not exceeded. The release limits are found by solving Equations 10-1 and 10-2 for the total allowed release rate, Q_{tv}.

$$(1.11)\sum\{ f_i[Q_{ts}\overline{S}_i + Q_{tv}\overline{V}_i]\} < 500\text{mrem/yr} \qquad (10\text{-}1)$$

$$\sum \{(\overline{L}_i f_i[(X/Q)_s\, Q_{ts} \exp(-\lambda_i R/3600u_s)$$

$$+ (X/Q)_v Q_{tv} \exp-(\lambda_i R/3600u_v)] \qquad (10\text{-}2)$$

$$+(1.11)(f_i)[Q_{ts}S_i + Q_{tv}V_i]\}$$

$$< 3000\text{mrem/yr}$$

The summations are over noble gas radionuclides i.

f_i Fractional Radionuclide Composition
The release rate of noble gas radionuclide i divided by the total release rate of all noble gas radionuclides.

Q_{ts} Total allowed Release Rate, Stack Release [μCi/sec]
The total allowed release rate of all noble gas radionuclides released as stack releases.

Q_{tv} Total Allowed Release Rate, Vent Release [μCi/sec]
The total allowed release rate of all noble gas radionuclides released as vent releases.

Refer to Section A.1 of Appendix A for the definitions of the remaining parameters.

Equation 10-1 is based on Equation A-8 of Appendix A and the RETS restriction on whole body dose rate (500 mrem/yr) due to noble gases released in gaseous effluents (see Section A.1.3.1 of Appendix A). Equation 10-2 is based on Equation A-9 of Appendix A and the RETS restriction on skin dose rate (3000 mrem/yr) due to noble gases released in gaseous effluents (see Section A.1.3.2 of Appendix A).

Calibration methods and surveillance frequency for the monitors will be conducted as specified in the RETS.

10.1.3.3 Release Mixture

In the determination of alarm and trip setpoints the radioactivity mixture in the exhaust air is assumed to have the following compositions.

- Reactor building vent effluent monitors.

  The mixture used for the GE monitors is taken from a representative isotopic analysis of the vent stack noble gas released since the last calibration, or based on nominal response of detector. The "mixture" used for the SPING is assumed to be a single pseudo-noble gas radionuclide.

- Condenser air ejector monitor.

  The mixture used for this monitor is taken from a representative isotopic analysis of noble gases collected at the recombiner outlet during plant operation, since the last alarm setpoint calculation.

- Units 2/3 plant chimney monitors.

  The mixture used for the GE monitors is taken from the most recent isotopic analysis of noble gases collected from the chimney monitor which corresponds to an above background recorder reading. The "mixture" used for the SPING is assumed to be a single pseudo-noble gas radionuclide.

10.1.3.4 Conversion Factors

The conversion factors used to establish gaseous effluent monitor setpoints are obtained as follows.

- Reactor building vent effluent monitor.

  For the GE monitors, the isotopic analysis in Section 10.1.3.3 and the monitor reading (in mR/hr) at the time of the analysis or nominal response of detector are used to establish the conversion factor in mR/hr per μCi/cc or μCi/ft^3. For the SPING the conversion factor is based on the 0.8 MeV gamma of the pseudo-noble gas radionuclide.

- Condenser air ejector monitor.

  The isotopic analysis in Section 10.1.3.3 and the flow and monitor reading (in mR/hr) at the time of the analysis are used to establish the conversion factor in mR/hr per μCi/cc or μCi/ft^3.

- Units 2/3 plant chimney monitors

  For the GE monitors, the isotopic analysis in Section 10.1.3.3 and flow and monitor reading (in CPS) at the time of the analysis are used to establish the conversion factor in CPS per μCi/cc or μCi/ft^3. For the SPING the conversion factor is based on the 0.8 MeV gamma of the pseudo-noble gas radionuclide.

10.1.3.5 HVAC Flow Rates

The HVAC exhaust flow rates are obtained from either the Units 2/3 process computers or the SPING control station. For the 2/3 Chimney, additional process flow rates must be added to obtain the total chimney flow (see Figure 10-2). Unit operation may affect actual flow rates which therefore may differ from values listed. If the actual flows are not available, the following default values based on design flow can be used:

Units 2/3 Chimney Air Flow	1.25E10 cc/min
Units 2/3 Combined Reactor Vent	6.23E9 cc/min
Unit 1 Chimney Air Flow	9.46E8 cc/min
Unit 1 Chemical Cleaning Chimney Air Flow	1.61E9 cc/min

10.1.4 Allocation of Effluents from Common Release Points

Radioactive particulates and iodine released from the Unit 1 Chemical Cleaning Chimney originate from the Chemical Cleaning Building and Interim Radwaste Storage Facility.

Radioactive gases, particulates, and iodines released from the Unit 1 chimney originate from Unit 1 only. However, radioactive gaseous effluents released from Units 2/3 are comprised of contributions from both units. Estimates of noble gas contributions from Units 2 and 3 are allocated considering appropriate operating conditions and measured SJAE off-gas activities. Allocation of radioiodine and radioactive particulate releases to Units 2 or 3 specifically is not as practical and is influenced greatly by in-plant leakage. Under normal operating conditions, allocation is made using reactor coolant iodine activities. During unit shutdowns or periods of known major in-plant leakage, the apportionment is adjusted accordingly. The allocation of effluents is estimated on a monthly basis.

10.1.5 Dose Projections

Because the gaseous releases are continuous, the doses are routinely calculated in accordance with the RETS.

10.2 LIQUID RELEASES

10.2.1 System Description

A simplified liquid radwaste and liquid effluent flow diagram is provided in Figure 10-3.

The liquid radwaste treatment system is designed and installed to reduce radioactive liquid effluents by collecting the liquids, providing for retention or holdup, and providing for treatment by evaporator, demineralizer, filter, and further vendor processing systems for the purpose of reducing the total radioactivity prior to reuse or release to the environment. The system is described in the Dresden UFSAR Section 11.2.

10.2.1.1 Unit 1 Storage Tanks

Liquid radioactive effluents are not released from Unit 1 Storage tanks directly to the environment but are made through the Units 2/3 radwaste system.

10.2.1.2 Units 2/3 Waste Sample Tanks

There are three waste sample tanks (33,000 gallons each) which receive water from the liquid waste treatment system. These tanks are transferred to the waste surge tank for discharge to the Illinois River via the discharge canal.

Rev 2.0 March 99

10.2.1.3 Units 2/3 Floor Drain Sample Tanks

There are two floor drain sample tanks (22,000 gallons each) which receive liquid waste from the floor drain treatment system. These tanks are transferred to the waste surge tank or discharged to the Illinois River via the discharge canal.

10.2.1.4 Units 2/3 Waste Surge Tank

The waste surge tank receives processed water from the waste sample tanks and floor drain sample tanks. This tank discharges to the Illinois River via the discharge canal.

10.2.2 Radiation Monitors

Rev. 2.0 March 99

10.2.2.1 Liquid Radwaste Effluent Monitor

The monitor is used to monitor releases from the waste surge tank, floor drain sample tanks or portable waste treatment system tanks. On high alarm, a grab sample of the effluent is automatically taken from the discharge side of the sample chamber after a 0 to 60 second delay determined by a locally mounted timer. The release is terminated manually by initiating closure of the low flow or high flow discharge line valves.

Pertinent information on the monitor and associated control devices is provided in the Dresden UFSAR Section 11.5.

10.2.2.2 Units 2 & 3 Service Water Effluent Monitors

The monitors continuously monitor the service water effluent. On high alarm a grab sample is taken.

Pertinent information on these monitors is provided in the Dresden UFSAR Section 11.5..

10.2.3 Alarm-and Trip Setpoints

10.2.3.1 Setpoint Calculations

Alarm and trip setpoints of liquid effluent monitors at the principal release points are established to ensure that the limits of 10CFR20 are not exceeded in the unrestricted area.

10.2.3.1.1 Liquid Radwaste Effluent Monitor

The monitor setpoint is found by solving equation 10-3 for the total isotopic activity.

$$P \leq K \times (\Sigma C_i^T / \Sigma(C_i^T / DWC_i)) \times ((F^d + F^r_{max}) / F^r_{max}) \quad (10\text{-}3)$$

P	Release Setpoint	[cpm]
C_i^T	Concentration of radionuclide i in the release tank	[μCi/ml]
F^r_{max}	Maximum Release Tank Discharge Flow Rate The flow rate from the radwaste discharge tank. The maximum pump discharge rate of 250 gpm is used for calculating the setpoint.	[gpm]
K	Calibration constant	[cpm/μCi/ml]
DWC_i	Derived Water Concentration (also referred to as Effluent Concentration Limit, ECL) of Radionuclide i	[μCi/ml]
	The concentration of radionuclide i given in Appendix B, Table 2, Column 2 to 10CFR20.1001-2402. When technical specifications allow, ten[1] (10) times the DWC_i may be used.	
F^d	Dilution Flow	[gpm]

[1] Dresden Station may use ten (10) upon Technical Specification approval. Until then, one (1) times the DWC must be used.

10.2.3.1.2 Units 2 & 3 Service Water Effluent Monitor

The monitor setpoint is established at two times the background radiation value.

10.2.3.2 Discharge Flow Rates

10.2.3.2.1 Release Tank Discharge Flow Rate

Prior to each batch release, a grab sample is obtained.

The results of the analysis of the sample determine the discharge rate of each batch as follows:

$$F^r_{max} = 0.1(F^d/\sum(C_i/DWC_i)) \quad (10\text{-}4)$$

The summation is over radionuclides i.

0.1 Reduction factor for conservatism.

F^r_{max} Maximum Permitted Discharge Flow Rate [gpm]

The maximum permitted flow rate from the radwaste discharge tank. Releases are not permitted if the calculated discharge rate, F^r_{max}, is less than 250 gpm.

F^d Dilution Flow [gpm]

C_i Concentration of Radionuclide i in the Release Tank [μCi/ml]

The concentration of radioactivity in the radwaste discharge tank based on measurements of a sample drawn from the tank.

DWC_i Derived Water Concentration of Radionuclide i [μCi/ml]

The concentration of radionuclide i given in Appendix B, Table 2, Column 2 to 10CFR20.1001-2402. When technical specifications allow, ten[2] (10) times the DWC_i may be used.

[2] Dresden Station may use ten (10) upon Technical Specification approval. Until then, one (1) times the DWC must be used.

10.2.3.3 Release Limits

Release limits are determined from 10CFR20. Calculated maximum permissible discharge rates are divided by 10 to ensure that applicable derived water concentrations (DWC) are not exceeded.

10.2.3.4 Release Mixture

For the liquid radwaste effluent monitor, the release mixture used for the setpoint determination is the radionuclide mix identified in the grab sample isotopic analysis.

For all other liquid effluent monitors, no release mixture is used because the setpoint is established at "two times background."

10.2.3.5 Conversion Factors

The readout for the liquid radwaste effluent monitor is in CPM. The calibration constant is based on the detector sensitivity to Co-60.

The readouts for the Units 2 & 3 service water effluent monitors are in μCi/ml. The calibration constants are based on the detector sensitivity to Co-60.

10.2.3.6 Liquid Dilution Flow Rates

The dilution flow is determined using the installed flowmeter in the discharge canal.

10.2.4 Allocation of Effluents from Common Release Points

Radioactive liquid effluents released from the release tanks are comprised of contributions from all three units. Under normal operating conditions, it is difficult to apportion the radioactivity between the units. Consequently, allocation is normally made evenly between units 2 and 3.

10.2.5 Projected Doses for Releases

Doses due to liquid effluents are calculated in accordance with the RETS.

10.3 SOLIDIFICATION OF WASTE/PROCESS CONTROL PROGRAM

The process control program (PCP) contains the sampling, analysis, and formulation determination by which solidification of radioactive wastes from liquid systems is ensured.

Figure 10-4 is a simplified diagram of solid radwaste processing.

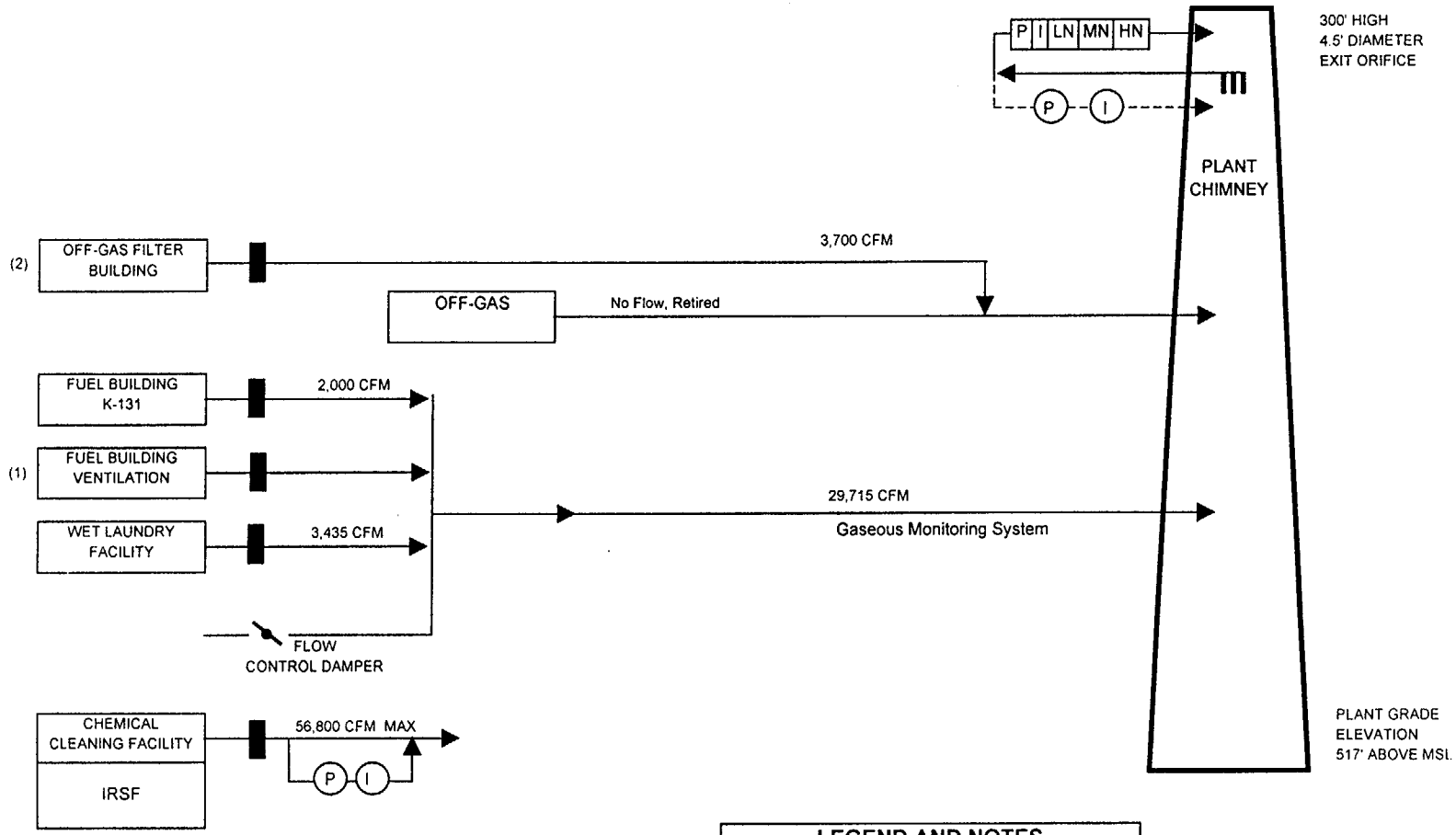

(1) 8,000 CFM summer
4,000 CFM winter

(2) Normally Operated in Winter Only

LEGEND AND NOTES

- HEPA FILTER
- (P) PARTICULATE SAMPLE
- (I) IODINE SAMPLE
- P I LN — FLOW THROUGH RADIATION MONITOR:
  P=PARTICULATE
  I=IODINE
  LN, MN, HN,=LOW, MEDIUM & HIGH RANGE NOBLE GAS

NOTES:
1. UNIT 1 IS NOT OPERATIONAL
2. ALL FLOW RATES ARE DESIGN FLOW RATES, NOT ACTUAL

OFFSITE DOSE CALCULATION MANUAL
DRESDEN STATION UNIT 1

FIGURE 10-1

SIMPLIFIED GASEOUS RADWASTE AND GASEOUS EFFLUENT FLOW DIAGRAM

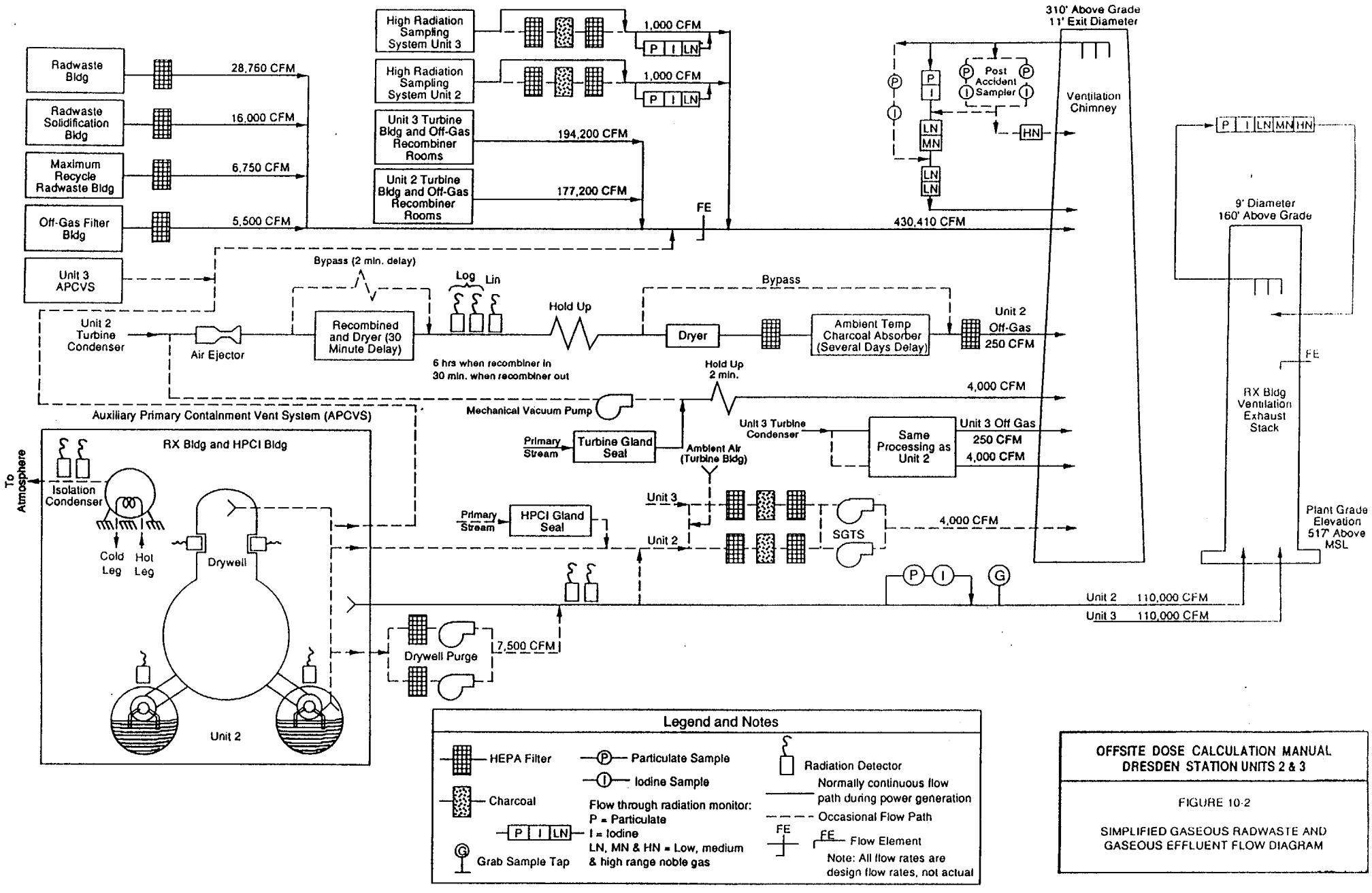

OFFSITE DOSE CALCULATION MANUAL
DRESDEN STATION UNITS 2 & 3

FIGURE 10-2

SIMPLIFIED GASEOUS RADWASTE AND GASEOUS EFFLUENT FLOW DIAGRAM

d10r2-1.doc

Rev 2.0 March 99

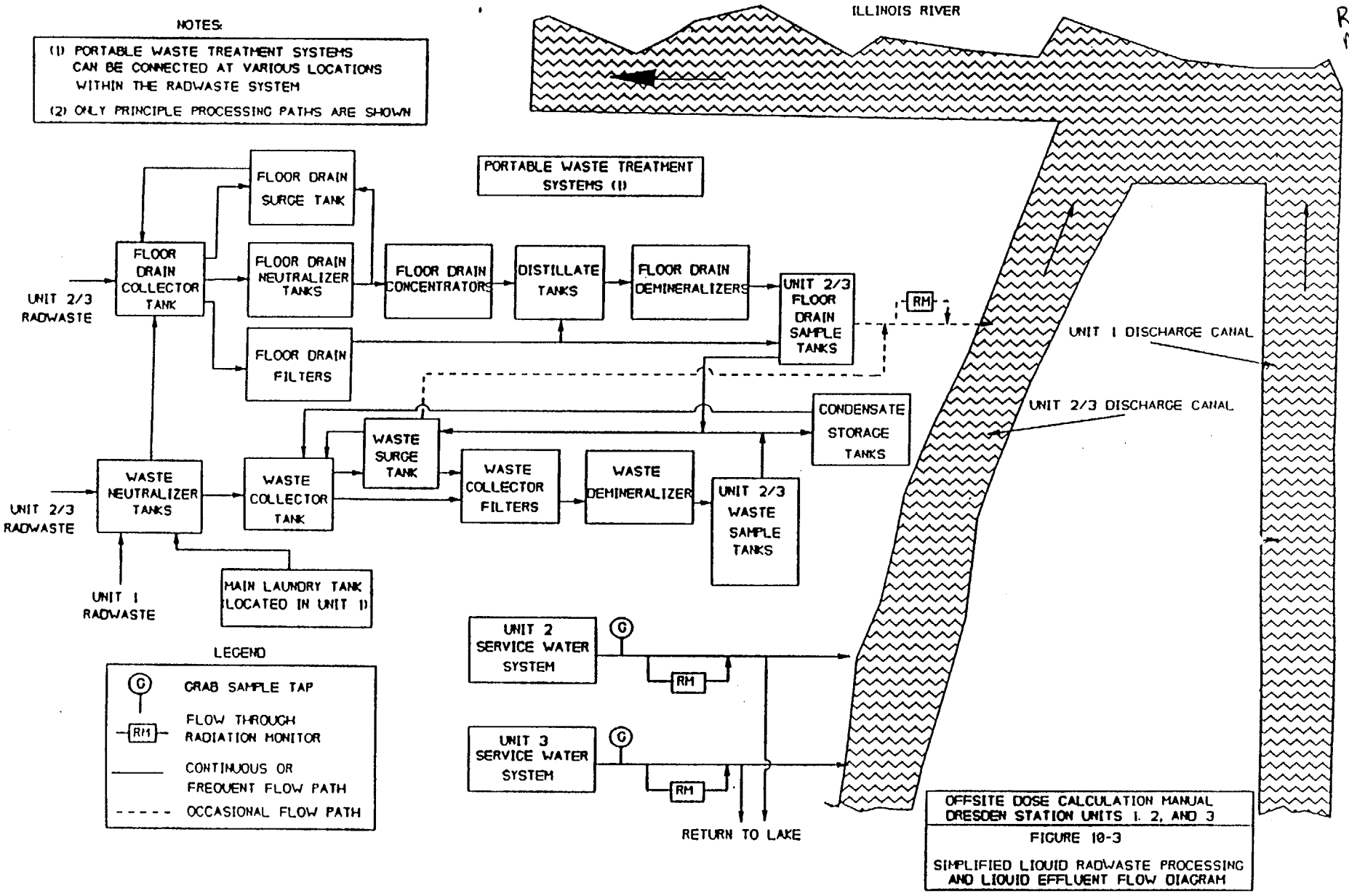

OFFSITE DOSE CALCULATION MANUAL
DRESDEN STATION UNITS 1, 2, AND 3

FIGURE 10-3

SIMPLIFIED LIQUID RADWASTE PROCESSING AND LIQUID EFFLUENT FLOW DIAGRAM

d10r2-1.doc

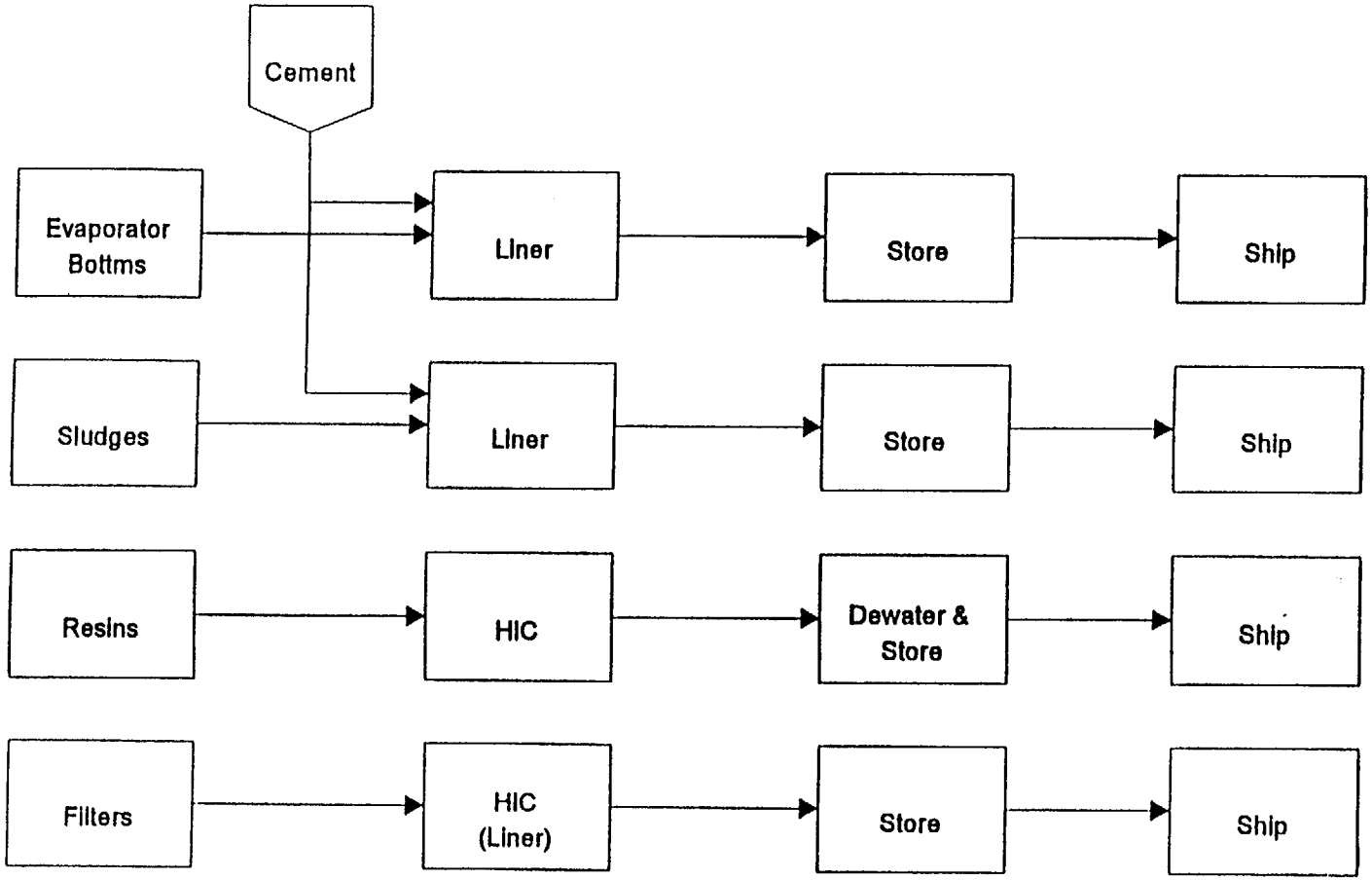

OFFSITE DOSE CALCULATION MANUAL
DRESDEN STATION UNITS 2 AND 3

FIGURE 10-4

SIMPLIFIED SOLID RADWASTE PROCESSING DIAGRAM

CHAPTER 11

DRESDEN ANNEX INDEX

Revision 1.4

CHAPTER 11

RADIOLOGICAL ENVIRONMENTAL MONITORING PROGRAM

TABLE OF CONTENTS

CHAPTER	TITLE	PAGE
11	Radiological Environmental Monitoring Program	11-1

LIST OF TABLES

NUMBER	TITLE	PAGE
11-1	Radiological Environmental Monitoring Program	11-2

LIST OF FIGURES

NUMBER	TITLE	PAGE
11-1	Fixed Air Sampling and TLD Sites and Outer Ring TLD Locations	11-9
11-2	Inner Ring TLD Locations and Near Station Water Sample Locations	11-10

CHAPTER 11

RADIOLOGICAL ENVIRONMENTAL MONITORING PROGRAM

The Radiological Environmental Monitoring Program for the environs around Dresden Station is given in Table 11-1.

Figures 11-1 and 11-2 show general sampling and monitoring locations.

Table 11-1
Radiological Environmental Monitoring Program

Exposure Pathway and/or Sample	Sample or Monitoring Location[6]	Sampling or Collection Frequency	Type and Frequency of Analysis
1. Airborne Radioiodine and Particulates	a. Indicators-Near Field D-04, Collins Road, 0.9 mi W (1.4 km N) D-06, Will County Road, 1.4 mi SE* (2.2 km G) D-07, Clay Products, 2.0 mi S (3.2 km J) D-45, McKinley Woods Rd, 1.5 mi ENE (2.4 km D) D-53, Grundy County Road, 2.1 mi SSE* (3.2 km H) * D-06 will be deleted once operational status of D-53 has been established. b. Indicators-Far Field D-08, Prairie Parks, 4.0 ,I SW (6.4 km L) D-10, Goose Lake Village, 3.8 mi SSW (6.1 km K) D-13, Minooka, 4.5 mi N (7.2 km A) D-14, Channahon, 3.5 mi NE (5.6 km C) c. Controls D-12, Lisbon, 10.0 mi NW (16.0 km Q) d. Special[8] D-01, Onsite Station 1, 0.6 mi NW (1.0 km Q) D-02, Onsite Station 2, 0.3 mi NE (0.5 km C) D-03, Onsite Station 3, 0.4 mi S (0.6 km J)	Continuous sampler operation with particulate sample collection weekly, or more frequently if required by dust loading, and radioiodine canister collection biweekly.	Radioiodine Canisters: I-131 analysis biweekly on near field and control samples[1]. Particulate Sampler[7]: Gross beta analysis following weekly filter change[2] and gamma isotopic analysis[3] quarterly on composite filters by location on near field and control samples.[1]

Table 11-1 (Cont'd)
Radiological Environmental Monitoring Program

Exposure Pathway and/or Sample	Sample or Monitoring Location[6]	Sampling or Collection Frequency	Type and Frequency of Analysis
2. Direct Radiation	a. Indicators-Inner Ring D-101-1, 1.0 mi N (1.6 km A) D-101-2, 1.0 mi N (1.6 km A) D-102-1, 1.3 mi NNE (2.1 km B) D-102-2, 1.3 mi NNE (2.1 km B) D-103-1, 1.2 mi NE (1.9 km C) D-103-2, 1.2 mi NE (1.9 km C) D-104-1, 1.5 mi ENE (2.4 km D) D-104-2, 1.5 mi ENE (2.4 km D) D-105-1, 1.4 mi E (2.2 km E) D-105-2, 1.4 mi E (2.2 km E) D-106-1, 0.9 mi ESE (1.4 km F) D-106-2, 0.9 mi ESE (1.4 km F) D-107-1, 1.3 mi SE (2.1 km G) D-107-2, 1.3 mi SE (2.1 km G) D-108-1, 1.9 mi SSE (3.0 km H) D-108-2, 1.9 mi SSE (3.0 km H) D-109-1, 0.8 mi S (1.3 km J) D-109-2, 0.8 mi S (1.3 km J) D-110-3, 0.8 mi SSW (1.3 km K) D-110-4, 0.8 mi SSW (1.3 km K) D-111-1, 0.6 mi SW (1.0 km L) D-111-2, 0.6 mi SW (1.0 km L) D-112a-1, 0.8 mi WSW (1.3 km M) D-112a-2, 0.8 mi WSW (1.3 km M) D-113-1, 0.9 mi W (1.4 km N) D-113-2, 0.9 mi W (1.4 km N) D-114-1, 1.0 mi WNW (1.6 km P) D-114-2, 1.0 mi WNW (1.6 km P) D-115-1, 0.8 mi NW (1.3 km Q) D-115-2, 0.8 mi NW (1.3 km Q) D-116-1, 1.0 mi NNW (1.6 km R) D-116-2, 1.0 mi NNW (1.6 km R)	Quarterly	Gamma dose on each TLD quarterly.

Table 11-1 (Cont'd)
Radiological Environmental Monitoring Program

Exposure Pathway and/or Sample	Sample or Monitoring Location[6]	Sampling or Collection Frequency	Type and Frequency of Analysis
2. Direct Radiation (Cont'd)	b. Indicators-Outer Ring D-201-1, 4.5 mi N (7.2 km A) D-201-2, 4.5 mi N (7.2 km A) D-202-1, 5.0 mi NNE (8.0 km B) D-202-2, 5.0 mi NNE (8.0 km B) D-203-1, 4.5 mi NE (7.2 km C) D-203-2, 4.5 mi NE (7.2 km C) D-204-1, 5.0 mi ENE (8.0 km D) D-204-2, 5.0 mi ENE (8.0 km D) D-205-1, 4.2 mi E (6.7 km E) D-205-2, 4.2 mi E (6.7 km E) D-206-1, 3.5 mi ESE (5.6 km F) D-206-2, 3.5 mi ESE (5.6 km F) D-207-1, 4.5 mi SE (7.2 km G) D-207-2, 4.5 mi SE (7.2 km G) D-208-1, 5.0 mi SSE (8.0 km H) D-208-2, 5.0 mi SSE (8.0 km H) D-209-1, 5.0 mi S (8.0 km J) D-209-2, 5.0 mi S (8.0 km J) D-210-1, 4.8 mi SSW (7.7 km K) D-210-2, 4.8 mi SSW (7.7 km K) D-211-1, 5.0 mi SW (8.0 km L) D-211-2, 5.0 mi SW (8.0 km L) D-212-3, 6.0 mi WSW (9.7 km M) D-212-4, 6.0 mi WSW (9.7 km M) D-213-1, 4.5 mi W (7.2 km N) D-213-2, 4.5 mi W (7.2 km N) D-214-1, 4.5 mi WNW (7.2 km P) D-214-2, 4.5 mi WNW (7.2 km P) D-215-1, 5.1 mi NW (8.2 km Q) D-215-2, 5.1 mi NW (8.2 km Q) D-216-1, 4.8 mi NNW (7.7 km R) D-216-2, 4.8 mi NNW (7.7 km R)		

Table 11-1 (Cont'd)
Radiological Environmental Monitoring Program

Exposure Pathway and/or Sample	Sample or Monitoring Location[6]	Sampling or Collection Frequency	Type and Frequency of Analysis
2. Direct Radiation (Cont'd)	c. Other Indicators One at each of the airborne location given in part 1.a and 1.b. d. Controls One at each airborne control location given in part 1.c.		

Table 11-1 (Cont'd)
Radiological Environmental Monitoring Program

Exposure Pathway and/or Sample	Sample or Monitoring Location[6]	Sampling or Collection Frequency	Type and Frequency of Analysis
3. Waterborne			
a.. Ground/Well	a. Indicators D-23, Thorsen Well, 0.7 mi S (1.1 km J) D-35, Dresden Lock & Dam, 0.5 mi NW (0.8 km Q)	Quarterly	Gamma isotopic[3] and tritium analysis quarterly.
b. Drinking Water	There is no drinking water pathway within 6.2 mi downstream of station.		
c. Surface Water	a. Indicator D-51, Dresden Lock & Dam, 0.5 mi NW (0.8 km Q)	Weekly grab sample	Gross beta and gamma isotopic analysis[3] on monthly composite; tritium analysis on quarterly composite.
d. Control	a. Control D-52, DesPlaines River, 0.9 mi ESE (1.4 km F)	Weekly grab sample	Gross beta and gamma isotopic analysis[3] on monthly composite; tritium analysis on quarterly composite.
e. Sediments	a. Indicator D-27, Dresden Lock & Dam, 0.5 mi NW (0.8 km Q)	Semiannually	Gamma isotopic analysis[3] semiannually.

Table 11-1 (Cont'd)
Radiological Environmental Monitoring Program

Exposure Pathway and/or Sample	Sample or Monitoring Location[6]	Sampling or Collection Frequency	Type and Frequency of Analysis
4. Ingestion			
a. Milk	a. Indicators There are no dairies within 6.2 miles of the station. b. Control D-25, Vince Biros Farm, 11.5 mi SW (18.5 km L)	Biweekly: May through October; Monthly: November through April	Gamma isotopic(3) and I-131 analysis(4) on each sample.
b. Fish[5]	a. Indicator D-28, Dresden Pool of Illinois River, 0.5 mi NW (0.8 km Q) b. Control D-46, DesPlaines River upstream of discharge, 0.9 mi E (1.4 km E)	Two times annually	Gamma isotopic analysis[3] on edible portions of each
c. Food Products	a. Indicators Two samples from each of the four major quadrants within 6.2 miles of the station. Sample locations for food products may vary based on availability and therefore are not required to be identified here but shall be taken, if available. b. Controls Two samples within 9.3 to 18.6 miles of the station.	Annually	Gamma isotopic analysis[3] each sample.

Table 11-1 (Cont'd)
Radiological Environmental Monitoring Program

[1] Far field samples are analyzed when near field results are inconsistent with previous measurements and radioactivity is confirmed as having its origin in airborne effluents released from the station, or at the discretion of the Radiation Protection Director.

[2] Airborne particulate sample filters shall be analyzed for gross beta radioactivity 24 hours or more after sampling to allow for radon and thoron daughter decay. If gross beta activity in air particulate samples is greater than 10 times the yearly mean of control samples, gamma isotopic analysis shall be performed on the individual samples.

[3] Gamma isotopic analysis means the identification and quantification of gamma emitting radionuclides that may be attributable to the effluents from the station.

[4] I-131 analysis means the analytical separation and counting procedure are specific for this radionuclide.

[5] The fish monitoring locations are not identified exactly on the map. The points, D-28 and D-46, represent the general area where the samples are taken.

[6] Distances provided for sampling/monitor locations are approximate.

[7] The analysis requirements listed are for the REMP-required samples only. The special samples require only quarterly gamma isotopic analyses on the composite filters.

[8] These sampling locations do not constitute REMP samples, but are special samples required per Section 11.5.1.10 of the UFSAR. They may be discontinued pending revision of the aforementioned section.

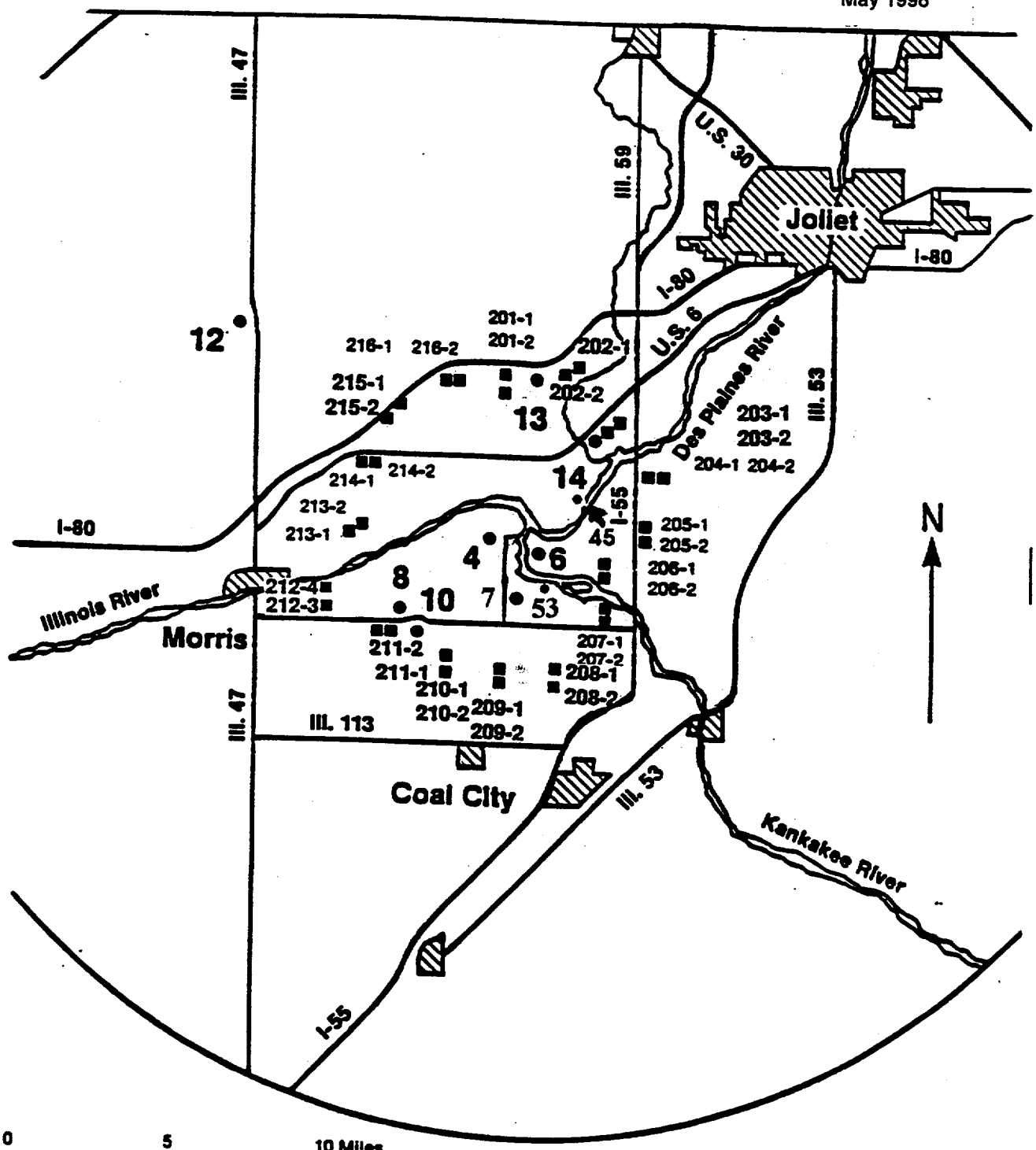

● Air Sampling Location

■ TLD Location

OFFSITE DOSE CALCULATION MANUAL
DRESDEN STATION UNITS 1, 2, & 3

FIGURE 11-1

FIXED AIR SAMPLING AND TLD SITES AND OUTER RING TLD LOCATIONS

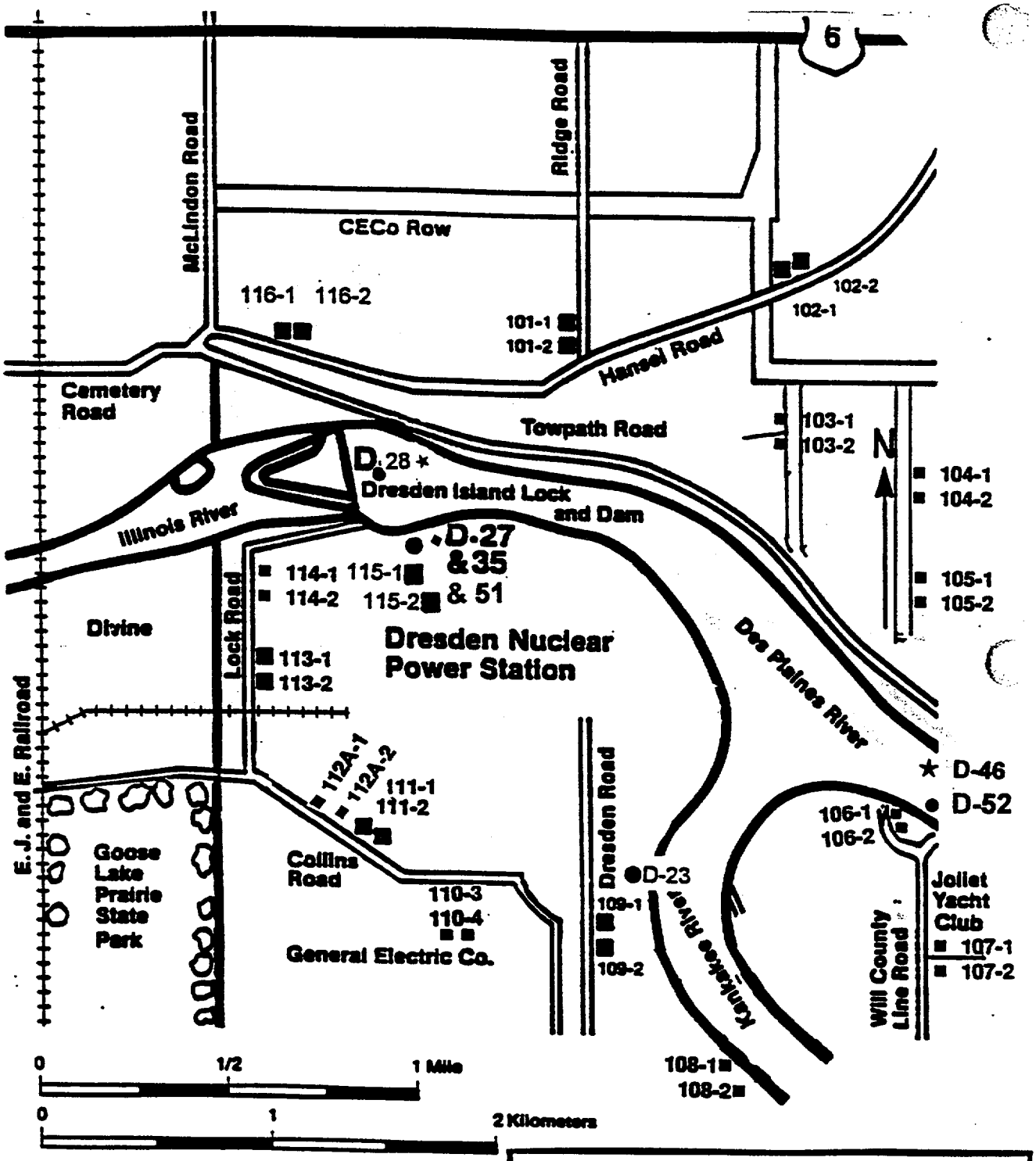

★ Fish
■ TLD
◆ Sediment
● Water

OFFSITE DOSE CALCULATION MANUAL
DRESDEN STATION UNITS 1, 2, & 3

FIGURE 11-2

INNER RING TLD LOCATIONS AND NEAR STATION WATER SAMPLE LOCATIONS

Dresden Station
Chapter 12 Change Summary
ODCM Revision 1.9, March 1999

Page or Section	Change Description
12-ii	Updated revision number, date and file designator.
12-8	Added information in Action 11 concerning allowable discharge cases when the monitor is "operable" but conditions cannot be established in which to utilize it (e.g., low counts, low flow, etc.). Required actions are the same as what was previously present for an inoperable monitor.

Dresden Station
Chapter 12 Change Summary
ODCM Revision 1.10, July 1999

Page or Section	Change Description
12-i	Updated revision number, date and file designator.
12-ii	Updated the revision number.
12-7 (of Rev 1.9)	Deleted Unit 1 portion of Table 12.2-1, "Radioactive Liquid Effluent Monitoring Instrumentation." Liquid discharges are no longer completed at Unit 1.
12-7	In Table 12.2-1, "Radioactive Liquid Effluent Monitoring Instrumentation," added note (1) to Liquid Radwaste Effluent Gross Activity Monitor. The (1) notation was also added to previously existing text beyond the first paragraph of Action 11.
12-7	In Action 10, changed LLD requirement from 10^{-7} uCi/ml to $5x10^{-7}$ uCi/ml based on use of germanium detector to analyze isotopic activity.
12-9 (of Rev 1.9)	Deleted Unit 1 portion of Table 12.2-2, "Radioactive Liquid Effluent Monitoring Instrumentation Surveillance Requirements." Liquid discharges are no longer completed at Unit 1.
12-9	In Table 12.2-2 Table Notations, deleted note (g) regarding operability verification of Unit 1 Discharge Canal Sampler. This note is no longer applicable with the deletion of Unit 1 portions of Tables 12.2-1 and 12.2-2.
12-36	In Table 12.4-1, "Radioactive Gaseous Waste Sampling and Analysis Program, Unit 1," added Row B., "Chem Cleaning Chimney".
12-40	Added note (7) to Table 12.4-1. This note supports the addition of the Chem Cleaning Chimney in previous change (page 12-36).

NOTE:

Chapter 12, Rev. 1.10, July 1999 was completed, reviewed and PORC approved, but was not distributed into the controlled copies of the ODCM. This information has been included in the January 2000 Chapter 12, Rev. 1.11 controlled copy distribution. Rev. 1.10 PORC approved documentation is attached.

TABLE 12.2-1

RADIOACTIVE LIQUID EFFLUENT MONITORING INSTRUMENTATION

UNIT 1

Instrument	Minimum Channels Operable	Total No. of Channels	Action
Discharge Canal Sampler*	1	1	12

ACTIONS

ACTION 12 - Operability is verified prior to performing and once a day during planned discharge.

* When Instrument is unavailable and associated actions cannot be performed, then discharges may not be made.

TABLE 12.2-2

RADIOACTIVE LIQUID EFFLUENT MONITORING
INSTRUMENTATION SURVEILLANCE REQUIREMENTS

UNIT 1

Instrument	Functional Test	Calibration[b][f]	Instrument Check[f]	Source Check
Discharge Canal Sampler* [g]				

*When instrument is unavailable and associated actions cannot be performed, then discharges may not be made.

TABLE 12.2-2 (Cont'd)

RADIOACTIVE LIQUID EFFLUENT MONITORING
INSTRUMENTATION SURVEILLANCE REQUIREMENTS

TABLE NOTATIONS

(a) The Instrument Functional Test shall also demonstrate that control room alarm annunciation occurs, if any of the following conditions exist, where applicable.

1. Instrument indicated levels above the alarm setpoint.
2. Circuit failure.
3. Instrument indicates a downscale failure.
4. Instrument controls not set in OPERATE mode.

(b) Calibration shall include performance of a functional test.

(c) Calibration shall include performance of a source check.

(d) Source check shall consist of observing instrument response during a discharge.

(e) Functional tests may be performed by using trip check and test circuitry associated with the monitor chassis.

(f) Functional tests, calibrations, and instrument checks are not required when these instruments are not required to be operable or are tripped. Calibration is not required to be performed more than once every 18 months.

~~(g) Operability is verified prior to performing discharge and once a day during planned discharge.~~

TABLE 12.4-1

RADIOACTIVE GASEOUS WASTE SAMPLING
AND ANALYSIS PROGRAM
UNIT 1

GASEOUS RELEASE TYPE	SAMPLING FREQUENCY	MINIMUM ANALYSIS FREQUENCY	TYPE OF ACTIVITY ANALYSIS	LOWER LIMIT OF DETECTION (LLD)[1] (µCi/ml)
A. Main Chimney	M (Grab Sample)	M	Principal Gamma Emitters [5] Tritium Noble Gases	$1x10^{-4}$ $1x10^{-6}$ $1x10^{-6}$
	M[4,6] (Continuous)	M [3] Iodine Sample	I-131 I-133	$1x10^{-12}$ $1x10^{-10}$
	M[6] (Continuous)	M [3] Particulate Sample	Principal Gamma Emitters [5]	$1x10^{-11}$
	Q (Continuous)	Q Composite Particulate Sample	Sr-89, Sr-90 Gross Alpha	$1x10^{-11}$
B. CHEM CLEANING CHIMNEY	W (7) (CONTINUOUS)	W IODINE SAMPLE	I-131 I-133	$1X10^{-12}$ $1X10^{-10}$
	W (7) (CONTINUOUS)	W PARTICULATE SAMPLE	PRINCIPAL GAMMA EMITTER (5)	$1X10^{-11}$

TABLE 12.4-1 (Cont'd)

RADIOACTIVE GASEOUS WASTE SAMPLING AND ANALYSIS PROGRAM
TABLE NOTATION

(2) Sampling and analyses shall also be performed following shutdown, startup, or a thermal power change exceeding 20 percent of rated thermal power in 1 hour unless (1) analysis shows that the dose equivalent I-131 concentration in the primary coolant has not increased more than a factor of 5, and (2) the noble gas activity monitor shows that effluent activity has not increased by more than a factor of 3.

(3) Samples shall be changed at least once per 7 days and the analyses completed within 48 hours after removal from the sampler. Sampling shall also be performed within 24 hours following each shutdown, startup, or thermal power level change exceeding 20% of rated thermal power in one hour. This requirement does not apply if 1) analysis shows that the dose equivalent I-131 concentration in the primary coolant has not increased more than a factor of 5, and 2) the noble gas activity monitor shows that effluent activity has not increased by more than a factor of 3. When samples collected for 24 hours are analyzed, the corresponding LLDs may be increased by a factor of 10.

(4) The ratio of sample flow rate to the sampled stream flow rate shall be known.

(5) The principal gamma emitters for which the LLD specification applies exclusively are the following radionuclides: Kr-87, Kr-88, Xe-133, Xe-133m, Xe-135, and Xe-138 for gaseous emissions, and Mn-54, Fe-59, Co-60, Zn-65, Co-58, Mo-99, Cs-134, Cs-137, Ce-141, and Ce-144 for particulate emissions. Other peaks which are measurable and identifiable by gamma ray spectrometry, together with the above nuclides, shall be also identified and reported when an actual analysis is performed on a sample. Nuclides which are below the LLD for the analyses shall not be reported as being present at the LLD level for the nuclide.

(6) Analysis frequency shall be increased to 1/week if release rates exceed 1% of any applicable limit referenced in the ODCM, when added to Units 2 and 3 airborne effluents.

(7) Gaseous Discharge from the Chemical Cleaning Building is continuously sampled through a particulate filter and iodine cartridge which are counted weekly. Sampling is not required if the Chemical Cleaning and Interim Radwaste Storage Facility (IRSF) ventilation systems are not running.

TABLE 12.2-1

RADIOACTIVE LIQUID EFFLUENT MONITORING INSTRUMENTATION

UNITS 2 & 3

	Instrument	Minimum Channels Operable	Total No. of Channels	Action
1.	Service Water Effluent Gross Activity Monitor	1	1	10
2.	Liquid Radwaste Effluent Gross Activity Monitor (1)	1	1	11

ACTIONS

ACTION 10 - With less than the minimum number of operable channels, releases via this pathway may continue, provided that at least once per 12 hours grab samples are collected and analyzed for beta or gamma activity at an LLD of less than or equal to ~~10^{-7}~~ 5×10^{-7} uCi/ml.

(The grab sample should normally be taken at the Service Water Monitor or at a location which would be representative of the Service Water which is monitored.)

ACTION 11 - With less than a minimum number of operable channels, effluent releases via this pathway may continue, provided that prior to initiating a release, at least 2 independent samples are analyzed, and at least 2 members of the facility staff independently verify the release calculation and discharge valving. Otherwise, suspend release of radioactive effluent via this pathway.

(1) Effluent release via this pathway may continue when either:

1. The flow through the monitor cannot be established and maintained within design parameters, or
2. Effluent activity is below the range of detection for the monitor.

Provided that prior to initiating a release, at least 2 independent samples are analyzed, and at least 2 members of the facility staff independently verify the release calculations and discharge valving.

Otherwise suspend release of radioactive effluent via this pathway.

CHAPTER 12.0

SPECIAL NOTE

The requirements of the Technical Specifications shall take precedence over this chapter, should any differences occur.

The transfer of the Radiological Effluent Technical Specifications (RETS) to the ODCM for Unit 1 has been approved by the Nuclear Regulatory Commission in Amendment 39.

The transfer of the Radiological Effluent Technical Specifications (RETS) to the ODCM for Units 2 and 3 has been approved by the Nuclear Regulatory Commission in Amendments 150 and 145.

DRESDEN ANNEX INDEX

CHAPTER 12

Revision 1.9

CHAPTER 12
RADIOLOGICAL EFFLUENT TECHNICAL STANDARDS (RETS)
TABLE OF CONTENTS

		PAGE
12.1	DEFINITIONS	12-1
12.2	INSTRUMENTATION	12-5
	A. Radioactive Liquid Effluent Monitoring Instrumentation	12-5
	1. Radioactive Liquid Effluent Monitoring Instrumentation Operability	12-5
	2. Radioactive Liquid Effluent Monitoring Instrumentation Surveillance	12-5
	B. Radioactive Gaseous Effluent Monitoring Instrumentation	12-5
	1. Radioactive Gaseous Effluent Monitoring Instrumentation Operability	12-5
	2. Radioactive Gaseous Effluent Monitoring Instrumentation Surveillance	12-6
	C. Liquid and Gaseous Effluents Instrumentation Bases	12-19
12.3	LIQUID EFFLUENTS	12-20
	A. Liquid Effluents Limits and Reporting Operability	12-20
	1. Concentration in Unrestricted Areas	12-20
	2. Dose from Liquid Effluents	12-20
	3. Dose Projections	12-21
	4. Liquid Radioactive Waste Treatment System	12-22
	5. System Operability and Plant Operations	12-22
	B. Liquid Effluents Surveillance	12-22
	1. Concentration in Unrestricted Areas	12-22
	2. Dose from Liquid Effluents	12-23
	3. Dose Projections	12-23
	C. Liquid Effluents Bases	12-30
	1. Concentration	12-30
	2. Dose	12-30
	3. Liquid Waste Treatment	12-30
	4. Mechanical Vacuum Pump	12-31
12.4	GASEOUS EFFLUENTS	12-32
	A. Gaseous Effluents Limits and Reporting Operability	12-32
	1. Dose Rate	12-32
	2. Noble Gas Dose	12-32
	3. Iodine-131, Iodine-133, Tritium and Particulate Dose	12-33
	4. Off-Gas Treatment	12-34
	5. Main Condenser Air Ejector	12-35
	6. System Operability and Plant Operations	12-35
	B. Gaseous Effluents Surveillance	12-36
	1. Dose Rate	12-36
	2. Noble Gas Dose	12-36
	3. Iodine-131, Iodine-133, Tritium and Particulate Dose	12-36
	4. Off-Gas Treatment	12-36
	5. Noble Gases at the Main Condenser Air Ejector	12-37

CHAPTER 12

RADIOLOGICAL EFFLUENT TECHNICAL STANDARDS (RETS)
TABLE OF CONTENTS
CONTINUED

		PAGE
12.4	**GASEOUS EFFLUENTS** (Cont'd)	
	C. Gaseous Effluents Bases	12-43
	1. Gaseous Effluents, Dose	12-43
	2. Dose, Noble Gases	12-43
	3. Dose, Radioiodines, Radioactive Material in Particulate Form and Radionuclides Other than Noble Gases	12-44
	4. Gaseous Waste Treatment	12-44
12.5	**RADIOLOGICAL ENVIRONMENTAL MONITORING PROGRAM**	12-45
	1. Monitoring Program	12-45
	2. Land Use Census	12-59
	3. Interlaboratory Comparison Program	12-60
12.6	**RECORDKEEPING AND REPORTING**	12-61
	1. Station Operating Records	12-61
	2. Reports	12-61
	1. Radioactive Effluent Release Report	12-61
	2. Annual Radiological Environmental Operating Report	12-61
	3. Non-Routine Environmental Report	12-62
	3. Offsite Dose Calculation Manual (ODCM)	12-63
	4. Major Changes to Radioactive Waste Treatment Systems (Liquid and Gaseous)	12-64

CHAPTER 12

RADIOLOGICAL EFFLUENT TECHNICAL STANDARDS (RETS)
LIST OF TABLES

NUMBER	TITLE	PAGE
12.1-1	Surveillance Frequency Notation	12-3
12.1-2	Operational Modes	12-4
12.2-1	Radioactive Liquid Effluent Monitoring Instrumentation	12-7
12.2-2	Radioactive Liquid Effluent Monitoring Instrumentation Surveillance Requirements	12-9
12.2-3	Radioactive Gaseous Effluent Monitoring Instrumentation	12-12
12.2-4	Radioactive Gaseous Effluent Monitoring Instrumentation Surveillance Requirements	12-16
12.3-1	Allowable Concentration of Dissolved or Entrained Noble Gases Released from the Site to Unrestricted Areas in Liquid Waste	12-24
12.3-2	Radioactive Liquid Waste Sampling and Analysis Program	12-25
12.4-1	Radioactive Gaseous Waste Sampling and Analysis Program	12-38
12.5-1	Radiological Environmental Monitoring Program	12-48
12.5-2	Reporting Levels for Radioactivity Concentrations in Environmental Samples Reporting Levels	12-54
12.5-3	Detection Capabilities for Environmental Sample Analysis Lower Limit of Detection	12-55

12.1 DEFINITIONS (Cont'd)

10. The Offsite Dose Calculation Manual (ODCM) shall contain the methodology and parameters used in the calculation of offsite doses resulting from radioactive gaseous and liquid effluents, in the calculation of gaseous and liquid effluent monitoring Alarm/Trip Setpoints, and in the conduct of the Environmental Radiological Monitoring Program. The ODCM shall also contain (1) the Radioactive Effluent Controls and Radiological Environmental Monitoring Programs described in Section 12.5 and (2) descriptions of the information that should be included in the Annual Radiological Environmental Operating and Radioactive Effluent Release Reports required by Sections 12.6.2.1 and 12.6.2.2.

11. Operable - A system, subsystem, train, component or device shall be OPERABLE or have OPERABILITY when it is capable of performing its specified function(s) and when all necessary attendant instrumentation, controls, normal or emergency electrical power, cooling or seal water, lubrication or other auxiliary equipment that are required for the system, subsystem, train, component or device to perform its specified safety function(s) are also capable of performing their related support function(s).

12. The Process Control Program (PCP) shall contain the current formulas, sampling, analyses, test, and determinations to be made to ensure that processing and packaging of solid radioactive wastes based on demonstrated processing of actual or simulated wet solid wastes will be accomplished in such a way as to assure compliance with 10 CFR Parts 20, 61, and 71, State regulations, burial ground requirements, and other requirements governing the disposal of solid radioactive waste.

13. Public Dose means the dose received by a member of the public from exposure to radiation or radioactive material released by a licensee, or to any other source of radiation under the control of a licensee. Public dose does not include occupational dose or doses received from background radiation, from any medical administration the individual has received, from exposure to individuals administered radioactive material and released in accordance with 10CFR35.75, or from voluntary participation in medical research programs.

14. Rated Thermal Power - Rated thermal power shall be a total reactor core heat transfer rate to the reactor coolant of 2527 thermal megawatts.

15. Reactor Power Operation - Reactor power operation is any operation with the mode switch in the "Startup/Hot Standby" or "Run" position with the reactor critical and above 1% rated thermal power.

16. Source Check - The qualitative assessment of Channel response when the Channel sensor is exposed to a radioactive source.

17. Definitions Related to Estimating Dose to the Public Using the ODCM Computer Program:

    1. Actual - Refers to using known release data to project the dose to the public for the previous month. These data are stored in the database and used to demonstrate compliance with the reporting requirements of Chapter 12.

    2. Projected - Refers to using known release data from the previous month or estimated release data to forecast a future dose to the public. These data are NOT incorporated into the database.

TABLE 12.1-1

SURVEILLANCE FREQUENCY NOTATION

NOTATION	FREQUENCY*
S (Shiftly)	At least once per 12 hours
D (Daily)	At least once per 24 hours
T	At least once per 72 hours
W (Weekly)	At least once per 7 days
M (Monthly)	At least once per 31 days
Q (Quarterly)	At least once per 92 days
SA (Semiannually)	At least once per 184 days
A (Annually)	At least once per 366 days
E (Sesquiannually)	At least once per 18 months (550 days)
S/U (Startup)	Prior to each reactor startup
NA (Not Applicable)	Not applicable

*Each surveillance requirement shall be performed within the specified time interval with a maximum allowable extension not to exceed 25% of the surveillance interval. The bases to Technical Specifications 4.0.B provides clarification to this statement. These definitions do not apply to the Radiological Environmental Monitoring Program (Section 12.5).

TABLE 12.1-2

OPERATIONAL MODES

MODE	MODE SWITCH POSITION[f]	AVERAGE REACTOR COOLANT TEMPERATURE
1. POWER OPERATION	Run	Any temperature
2. STARTUP	Startup/Hot Standby	Any temperature
3. HOT SHUTDOWN	Shutdown[a,e]	> 212°F
4. COLD SHUTDOWN	Shutdown[a,b,e]	≤ 212°F
5. REFUELING[c]	Shutdown or Refuel[a,d]	≤ 140°F

TABLE NOTATIONS

[a] The reactor mode switch may be placed in the Run, Startup/Hot Standby, or Refuel position to test the switch interlock functions provided the control rods are verified to remain fully inserted by a second licensed operator or other technically qualified individual.

[b] The reactor mode switch may be placed in the Refuel position while a single control rod drive is being removed from the reactor pressure vessel per Technical Specification 3.10.I.

[c] Fuel in the reactor vessel with one or more vessel head closure bolts less than fully tensioned or with the head removed.

[d] See Technical Specification Special Test Exceptions 3.12.A and 3.12.B.

[e] The reactor mode switch may be placed in the Refuel position while a single control rod is being moved provided the one-rod-out interlock is OPERABLE.

[f] When there is no fuel in the reactor vessel, the reactor is considered not to be in any OPERATIONAL MODE. The reactor mode switch may then be in any position or may be inoperable.

12.2 INSTRUMENTATION

A. Radioactive Liquid Effluent Monitoring Instrumentation

1. Radioactive Liquid Effluent Monitoring Instrumentation Operability

1. The effluent monitoring instrumentation shown in Table 12.2-1 shall be operable with alarm trip setpoints set to insure that the limits of Section 12.3.A are not exceeded. The alarm setpoints shall be determined in accordance with the ODCM.

2. With a radioactive liquid effluent monitoring instrument alarm/trip setpoint less conservative than required, without delay suspend the release of radioactive liquid effluents monitored by the affected instrument, or declare the instrument inoperable, or change the setpoint so it is acceptably conservative.

3. With one or more radioactive liquid effluent monitoring instruments inoperable, take the action shown in Table 12.2-1. Return the instrument to operable status within 30 days and, if unsuccessful, explain in the next Radioactive Effluent Release Report why the inoperability was not corrected in a timely manner. This is in lieu of an LER.

4. In the event operability requirements and associated action requirements cannot be satisfied because of circumstances in excess of those addressed in the specifications, provide a 30-day written report to the NRC and no changes are required in the operational condition of the plant, and this does not prevent the plant from entry into any operational mode.

2. Radioactive Liquid Effluent Monitoring Instrumentation Surveillance

1. Each radioactive liquid effluent monitoring instrument shown in Table 12.2-2 shall be demonstrated operable by performance of the given source check, instrument check, calibration, and functional test operations at the frequencies shown in Table 12.2-2.

B. Radioactive Gaseous Effluent Monitoring Instrumentation

1. Radioactive Gaseous Effluent Monitoring Instrumentation Operability

1. The effluent monitoring instrumentation shown in Table 12.2-3 shall be operable with alarm/trip setpoints set to ensure that the limits of Section 12.4.A are not exceeded. The alarm/trip setpoints shall be determined in accordance with the ODCM.

2. With a radioactive gaseous effluent monitoring instruments alarm/trip set point less conservative than required, without delay suspend the release of radioactive gaseous effluents monitored by the affected instrument, or declare the instrument inoperable, or change the setpoint so it is acceptably conservative.

12.2.B.1 Radioactive Gaseous Effluent Monitoring Instrumentation Operability (Cont'd)

3. With one or more radioactive gaseous effluent monitoring instruments inoperable, take the action shown in Table 12.2-3. Return the instrument to operable status within 30 days and, if unsuccessful, explain in the next Radioactive Effluent Release Report why the inoperability was not corrected in a timely manner. This is in lieu of an LER.

4. The Unit 2/3 plant chimney gas sampling system may be out of service for 48 hours for the purpose of servicing the high range noble gas monitor as long as the following conditions are satisfied:

   1. Both units are at steady state conditions with the recombiners and charcoal absorbers in service for the operating unit(s).

   2. The dose rate in unrestricted areas must be shown by calculation to be less than the limits of 12.4.A assuming the charcoal absorbers are bypassed on both units.

   3. Both offgas monitors on Unit 2 and Unit 3 must be operational and the monitor reading correlated to the chimney release rate based on the conservative assumption of both units' charcoal absorbers being bypassed.

   4. If the provisions of 12.4.A.1.1, 12.4.A.1.2, or 12.4.A.1.3 cannot be met, an orderly load reduction of the unit(s) shall be initiated immediately.

5. In the event operability requirements and associated action requirements cannot be satisfied because of circumstances in excess of those addressed in this Section, provide a 30-day written report to the NRC and no changes are required in the operational condition of the plant, and this does not prevent the plant from entry into any operation mode.

2. Radioactive Gaseous Effluent Monitoring Instrumentation Surveillance

Each radioactive gaseous radiation monitoring instrument in Table 12.2-4 shall be demonstrated operable by performance of the given source check, instrument check, calibration, and functional test operations at the frequency shown in Table 12.2-4.

TABLE 12.2-1

RADIOACTIVE LIQUID EFFLUENT MONITORING INSTRUMENTATION

UNIT 1

Instrument	Minimum Channels Operable	Total No. of Channels	Action
Discharge Canal Sampler*	1	1	12

ACTIONS

ACTION 12 - Operability is verified prior to performing and once a day during planned discharge.

* When Instrument is unavailable and associated actions cannot be performed, then discharges may not be made.

TABLE 12.2-1

RADIOACTIVE LIQUID EFFLUENT MONITORING INSTRUMENTATION

UNITS 2 & 3

	Instrument	Minimum Channels Operable	Total No. of Channels	Action
1.	Service Water Effluent Gross Activity Monitor	1	1	10
2.	Liquid Radwaste Effluent Gross Activity Monitor	1	1	11

ACTIONS

ACTION 10 - With less than the minimum number of operable channels, releases via this pathway may continue, provided that at least once per 12 hours grab samples are collected and analyzed for beta or gamma activity at an LLD of less than or equal to 10^{-7} uCi/ml.

(The grab sample should normally be taken at the Service Water Monitor or at a location which would be representative of the Service Water which is monitored.)

ACTION 11 - With less than a minimum number of operable channels, effluent releases via this pathway may continue, provided that prior to initiating a release, at least 2 independent samples are analyzed, and at least 2 members of the facility staff independently verify the release calculation and discharge valving. Otherwise, suspend release of radioactive effluent via this pathway.

Effluent release via this pathway may continue when either:

1. The flow through the monitor cannot be established and maintained within design parameters, or
2. Effluent activity is below the range of detection for the monitor.

Provided that prior to initiating a release, at least 2 independent samples are analyzed, and at least 2 members of the facility staff independently verify the release calculations and discharge valving.

Otherwise suspend release of radioactive effluent via this pathway.

TABLE 12.2-2

RADIOACTIVE LIQUID EFFLUENT MONITORING
INSTRUMENTATION SURVEILLANCE REQUIREMENTS

UNIT 1

Instrument	Functional Test	Calibration[b][f]	Instrument Check[f]	Source Check
Discharge Canal Sampler* [g]				

*When Instrument is unavailable and associated actions cannot be performed, then discharges may not be made.

TABLE 12.2-2

RADIOACTIVE LIQUID EFFLUENT MONITORING
INSTRUMENTATION SURVEILLANCE REQUIREMENTS

UNITS 2 & 3

	Instrument	Functional Test[a][f]	Calibration[b][f]	Instrument Check[f]	Source Check
1.	Liquid Radwaste Effluent Gross Activity Monitor	Q[e]	E[c]	D	E[d]
2.	Service Water Effluent Gross Activity Monitor	Q[e]	E[c]	D	E

TABLE 12.2-2 (Cont'd)

RADIOACTIVE LIQUID EFFLUENT MONITORING
INSTRUMENTATION SURVEILLANCE REQUIREMENTS

TABLE NOTATIONS

(a) The Instrument Functional Test shall also demonstrate that control room alarm annunciation occurs, if any of the following conditions exist, where applicable.

1. Instrument indicated levels above the alarm setpoint.
2. Circuit failure.
3. Instrument indicates a downscale failure.
4. Instrument controls not set in OPERATE mode.

(b) Calibration shall include performance of a functional test.

(c) Calibration shall include performance of a source check.

(d) Source check shall consist of observing instrument response during a discharge.

(e) Functional tests may be performed by using trip check and test circuitry associated with the monitor chassis.

(f) Functional tests, calibrations, and instrument checks are not required when these instruments are not required to be operable or are tripped. Calibration is not required to be performed more than once every 18 months.

(g) Operability is verified prior to performing discharge and once a day during planned discharge.

TABLE 12.2-3

RADIOACTIVE GASEOUS EFFLUENT MONITORING INSTRUMENTATION

UNIT 1

Instrument	Minimum Channels Operable	Total No. of Channels	Applicable Operational Modes	Action
1. Main Chimney SPING Noble Gas Monitors	1	3	*	28
2. Main Chimney Particulate Samplers	1	1	*	27
3. Main Chimney Iodine Samplers	1	1	*	27

* At all times.

TABLE 12.2-3

RADIOACTIVE GASEOUS EFFLUENT MONITORING INSTRUMENTATION

UNITS 2 & 3

	Instrument	Minimum Channels Operable	Total No. of Channels	Applicable Operational Modes	Action
1.	Main Chimney Noble Gas/SPING/ GE Low Range Activity Monitor	1	3	*	20
2.	Main Chimney SPING Noble Gas Monitors Mid, Hi Range	1	1	*	26
3.	Main Chimney Iodine Sampler	1	1	*	22
4.	Main Chimney Particulate Sampler	1	1	*	22
5.	Main Chimney Flow Rate Monitor	1	1	*	21
6.	Main Chimney Sampler Flow Rate Monitor	1	1	*	21
7.	Reactor Building Vent Exhaust Duct Radiation Monitor	See Technical Specifications Section 3/4.2			
8.	Reactor Building Vent SPING Noble Gas Monitor Low, Mid, High Range	1	1	*	25
9.	Reactor Building Vent Flow Rate Monitor	1	1	*	21
10.	Reactor Building Vent Sampler Flow Rate Monitor	1	1	*	21
11.	Reactor Building Vent Iodine Sampler	1	1	*	22
12.	Reactor Building Vent Particulate Sampler	1	1	*	22
13.	Offgas Radiation Activity Monitor	1	2	**	29

* At all times.
** During Steam Jet Air Ejector operation.

TABLE 12.2-3 (Cont'd)
RADIOACTIVE GASEOUS EFFLUENT MONITORING INSTRUMENTATION
ACTIONS AND TABLE NOTATIONS

ACTION 20 - With less than the minimum channels operable, effluent releases via this pathway may continue for up to 30 days provided grab samples are taken at least once every 8 hours and analyzed for noble gas within 24 hours.

(The SPING has one low range noble gas channel, Channel 5, while the GE Low Range Activity Monitor has two low-range noble gas channels.

The grab samples are usually taken at either the SPING, if it is aligned in the flow path, or at the GE Low Range Activity Monitor Skid.)

ACTION 21 - With the number of operable channels less than the minimum required, effluent releases via this pathway may continue provided that the flow rate is estimated at least once per 4 hours.

(The Main Chimney Flow Rate Monitor and the Reactor Building Vent Flow Rate Monitor are used for flow through the Chimney/Vent. Channel 10 of the SPING gives the Chimney/Vent flow rate. This value can also be obtained from Point History.

The Main Chimney Sampler Flow Rate Monitor and the Reactor Building Vent Sampler Flow Rate Monitor are used for the flow through the SPING or backup sampler. Channel 15 of the SPING gives the sampler flow rate for the SPING. The U2, U3 and GE Backup systems each have a flow rate monitor.)

ACTION 22 - With less than the minimum channels operable, effluent releases via this pathway may continue provided samples are continuously collected with auxiliary sampling equipment, as required in Table 12.4-1.

(The normal sampler for 2/3 Main Chimney is the 2/3 Main Chimney SPING while for the 2/3 Reactor Building Vent it is the 2/3 Reactor Building Vent SPING.

If the 2/3 Chimney SPING is not operational, the normal backup is the GE Low Range Activity Skid. This skid collects an Iodine and Particulate sample.

If the 2/3 Reactor Building Vent SPING is not operational, the normal backups are the U2 and U3 Reactor Building Vent Samplers. The sampler for each vent collects an Iodine and Particulate sample.

If the normal backup sampler is not available, use of an alternate sampler should be used as long as it pulls from the same process stream.)

ACTION 25 - With less than the minimum channels operable, effluent releases via this pathway may continue provided that the minimum number of operable channels for the Reactor Building Vent Exhaust Duct Radiation Monitor are operable.

(These are Channels 5 (low-range), 7 (mid-range) and 9 (high-range) on the 2/3 Reactor Building Vent SPING.)

ACTION 26- With less than the minimum channels operable, effluent releases via this pathway may continue provided the low range monitor is operable and on scale. Restore the inoperable equipment to operable status within 21 days, or prepare and submit a report to the Commission pursuant to Technical Specification 6.9.B within the next 30 days outlining the plans, actions taken and procedures to be used to provide for the loss of sampling capability of the system.

(These are Channels 7 (mid-range) and 9 (high-range) on the 2/3 Main Chimney SPING.)

ACTION 27- The main chimney SPING monitor may be out-of-service for calibration and maintenance provided that particulate and iodine samples are taken and analyzed. The samples shall be collected using alternate filter holders and pumps connected to the main chimney sample stream.

(The normal Iodine and Particulate sampler for D1 Main Chimney is the D1 Main Chimney SPING. If the D1 Chimney SPING is not operational, the normal backup is a sample pump attached to the sample stream from the Main Chimney. The sample pump collects an Iodine and Particulate sample.)

ACTION 28 - With less than the minimum channels operable, effluent releases via this pathway may continue provided daily noble gas samples are taken and analyzed daily. Restore the inoperable equipment to operable status within 30 days. If service can not be returned, document equipment availability difficulties within the Radioactive Effluent Release Report for the period including actions taken in response to the equipment and procedures used to provide for the loss of sampling capability of the system.

(The normal noble gas monitors are Channels 5 (low-range), 7 (mid-range) and 9 (high-range) on the D1 Chimney SPING. Grab samples can either be taken off of the SPING or taps on the piping for the sample stream.)

ACTION 29 - With less than the minimum channels operable, gases from the main condenser off gas system may be released to the environment for up to 72 hours provided the off gas system is not bypassed and at least one chimney monitor is operable; otherwise, be in HOT STANDBY in 12 hours.

TABLE 12.2-4

RADIOACTIVE GASEOUS EFFLUENT MONITORING
INSTRUMENTATION SURVEILLANCE REQUIREMENTS

UNIT 1

	Instrument	Functional Test[a][e]	Calibration[b]	Instrument Check	Source Check	Applicable Operational Modes
1.	Main Chimney SPING Noble Gas Monitor Low Range	Q	E	D	M	*

*At all times.

TABLE 12.2-4

RADIOACTIVE GASEOUS EFFLUENT MONITORING
INSTRUMENTATION SURVEILLANCE REQUIREMENTS

UNITS 2 & 3

Instrument	Functional Test[a][e]	Calibration[b][e]	Instrument Check [e]	Source Check	Applicable Operational Modes
1. Main Chimney Noble Gas Activity Monitor	Q	E	D	M	*
2. Main Chimney SPING Noble Gas Monitor Lo, Mid, High Range	Q	E	D	M	*
3. Main Chimney Particulate and Iodine Sampler	NA	NA	D[c]	NA	*
4. Main Chimney Flow Rate Monitor	Q	E	D	NA	*
5. Main Chimney Sampler Flow Rate Monitor	Q[d]	E	D	NA	*
6. Reactor Bldg Vent Exhaust Duct Radiation Monitor	See Technical Specifications Section 3/4.2				
7. Reactor Bldg Vent SPING Noble Gas Monitor Lo, Mid, High Range	Q	E	D	M	*
8. Reactor Bldg Vent Flow Rate Monitor	Q	E	D	NA	*
9. Reactor Bldg Sampler Flow Rate Monitor	Q[d]	E	D	NA	*
10. Reactor Bldg Vent Particulate and Iodine Sampler	NA	NA	D[c]	NA	*
11. Off Gas Radiation Activity Monitor	Q	E	D	E	**

* At all times.
** During Steam Jet Air Ejector operation.

g:\murphy\odcm\annex\dresden\dn12r1-8.doc

TABLE 12.2-4 (Cont'd)

RADIOACTIVE GASEOUS EFFLUENT MONITORING
INSTRUMENTATION SURVEILLANCE REQUIREMENTS

TABLE NOTATIONS

(a) The Instrument Functional Test shall also demonstrate that control room alarm annunciation occurs, if any of the following conditions exist, where applicable.

1. Instrument indicates levels above the alarm setpoint.

2. Circuit failure.

3. Instrument indicates a downscale failure.

4. Instrument controls not set in OPERATE mode.

(b) Calibration shall include performance of a functional test.

(c) Instrument check to verify operability of sampler; that the sampler is in place and functioning properly.

(d) Functional test shall be performed on local switches providing low flow alarm.

(e) Functional tests, calibrations, and instrument checks are not required when these instruments are not required to be operable or are tripped. Calibration is not required to be performed more than once every 18 months.

12.2.C Liquid And Gaseous Effluents Instrumentation Bases

1. The radioactive liquid and gaseous effluent instrumentation is provided to monitor the release of radioactive materials in liquid and gaseous effluents during releases. The alarm setpoints for the instruments are provided to ensure that the alarms will occur prior to exceeding the limits of RETS.

12.3 LIQUID EFFLUENTS

12.3.A Liquid Effluents Limits and Reporting Operability

1. Concentration in Unrestricted Areas

The concentration of radioactive material released from the site to unrestricted areas (at or beyond the site boundary, Dresden Station ODCM Annex, Appendix F, Figure F-1) shall be limited to the concentrations specified in Appendix B, Table 2, Column 2 to 10CFR20.1001-20.2402[1], for radionuclides other than dissolved or entrained noble gases. For dissolved or entrained noble gases, the concentration shall be limited to the values listed in Table 12.3-1.

With the concentration of radioactive material released from the site to unrestricted areas exceeding the above limits, without delay decrease the release rate of radioactive materials and/or increase the dilution flow rate to restore the concentration to within the above limits.

2. Dose from Liquid Effluents

The dose or dose commitment above background to a member of the public from radioactive materials in liquid effluents released to unrestricted areas (at or beyond the site boundary) from the site shall be limited to the following:

1. During any Calendar Quarter:

   (1) Less than or equal to 3 mrem to the whole body.
   (2) Less than or equal to 10 mrem to any organ.

2. During any Calendar Year:

   (1) Less than or equal to 6 mrem to the whole body.
   (2) Less than or equal to 20 mrem to any organ.

3. With the calculated dose from the release of radioactive materials in liquid effluents exceeding any of the above limits, prepare and submit to the Commission within 30 days a Special Report which identifies the cause(s) and defines the corrective actions taken and the proposed actions to be taken to ensure that future releases are in compliance with Sections 12.3.A.2.1 and 12.3.A.2.2. This is in lieu of a Licensee Event Report.

[1]Upon technical specification approval, ten (10) times the Appendix B value may be used to determine the maximum instantaneous liquid release.

12.3.A Liquid Effluents Limits and Reporting Operability (Cont'd)

4. With the calculated dose from the release of radioactive materials in liquid effluents exceeding the limits of Sections 12.3.A.2.1 or 12.3.A.2.2., prepare and submit a Special Report to the Commission within 30 days and limit the subsequent releases such that the dose or dose commitment to a member of the public from all uranium fuel cycle sources is limited to less than or equal to 25 mrem to the total body or any organ (except thyroid, which is limited to less than or equal to 75 mrem) over 12 consecutive months. This Special Report shall include an analysis which demonstrates that radiation exposures to all real individuals from all uranium fuel cycle sources (including all effluent pathways and direct radiation) are less than the 40 CFR Part 190 Standard. Otherwise obtain a variance from the Commission to permit releases which exceed the 40 CFR Part 190 Standard. The radiation exposure analysis contained in the Special Report shall use methods prescribed in the ODCM. This report is in lieu of a Licensee Event Report.

5. When the projected annual whole body or any internal organ dose computed at the nearest downstream community water system is equal to or exceeds 2 mrem from all radioactive materials released in liquid effluents from the Station, prepare and submit a Special Report within 30 days to the operator of the community water system. The report is prepared to assist the operator in meeting the requirements of 40 CFR Part 141, EPA Primary Drinking Water Standards. A copy of this report will be sent to the NRC. This is in lieu of a Licensee Event Report.

3. Dose Projections

At all times during processing prior to discharge to the environs, process and control equipment provided to reduce the amount or concentration of radioactive materials shall be operated when the projected dose due to liquid effluent releases to unrestricted areas (Dresden Station ODCM Annex, Appendix F Figure F-1), when averaged over 31 days, exceeds 0.12 mrem to the total body or 0.40 mrem to any organ[a].

[a]These values represent 2% of the annual dose limits of Appendix I to 10CFR50.

12.3.A Liquid Effluents Limits and Reporting Operability (Cont'd)

4. Liquid Radioactive Waste Treatment System

If liquid waste has to be or is being discharged without treatment as required above, prepare and submit to the Commission with 30 days, a report which includes the following information.

1. Identification of the defective equipment.

2. Cause of the defect in the equipment.

3. Action(s) taken to restore the equipment to an operating status.

4. Length of time the above requirements were not satisfied.

5. Volume and curie content of the waste discharged which was not processed by the appropriate equipment but which required processing.

6. Action(s) taken to prevent a recurrence of equipment failures.

This is in lieu of a Licensee Event Report.

5. System Operability and Plant Operations

In the event a limit and/or associated action requirements identified in Sections 12.3.A and 12.3.B cannot be satisfied because of circumstances in excess of those addressed in this Section, no changes are required in the operational condition of the plant, and this does not prevent the plant from entry into any operational mode.

12.3.B Liquid Effluents Surveillance

1. Concentration in Unrestricted Areas

The concentration of radioactive material in unrestricted areas shall be determined to be within the prescribed limits by obtaining representative samples in accordance with the sampling and analysis program specified in Table 12.3-2. The sample analysis results will be used with the calculational methods in the ODCM to determine that the concentrations are within the limits of Section 12.3.A.1.

12.3.B Liquid Effluents Surveillance (Cont'd)

2. Dose from Liquid Effluents

The dose contribution from measured quantities of radioactive material shall be determined by calculation at least once per 31 days and cumulative summation of these total body and organ dosed shall be maintained for each calendar quarter.

Doses computed at the nearest community water system will consider only the drinking water pathway and shall be projected using the methods prescribed in ODCM, at least once per 92 days.

3. Dose Projections

Doses due to liquid releases to unrestricted areas (at or beyond the site boundary) shall be projected at least once per 31 days in accordance with the ODCM.

TABLE 12.3-1

ALLOWABLE CONCENTRATION OF DISSOLVED OR ENTRAINED NOBLE GASES RELEASED FROM THE SITE TO UNRESTRICTED AREAS IN LIQUID WASTE

NUCLIDE	AC(μCi/ml)*
Kr-85m	2×10^{-4}
Kr-85	5×10^{-4}
Kr-87	4×10^{-5}
Kr-88	9×10^{-5}
Ar-41	7×10^{-5}
Xe-131m	7×10^{-4}
Xe-133m	5×10^{-4}
Xe-133	6×10^{-4}
Xe-135m	2×10^{-4}
Xe-135	2×10^{-4}

* Computed from Equation 20 of ICRP Publication 2 (1959), adjusted for infinite cloud submersion in water, and R = 0.01 rem/week, density = 1.0 g/cc and Pw/Pt = 1.0.

TABLE 12.3-2

RADIOACTIVE LIQUID WASTE SAMPLING AND ANALYSIS PROGRAM

UNIT 1

LIQUID RELEASE TYPE	SAMPLING FREQUENCY[6]	MINIMUM ANALYSIS FREQUENCY[6]	TYPE OF ACTIVITY ANALYSIS	LOWER LIMIT OF DETECTION (LLD)[1] (µCi/ml)
Above Ground Liquid Storage Tanks	See TS 3/4.8.J	See TS 3/4.8.J	Principal Gamma Emitters[5]	$5x10^{-7}$
			Dissolved & Entrained Gases[6] (Gamma Emitters)	$1x10^{-5}$

TABLE 12.3-2
RADIOACTIVE LIQUID WASTE SAMPLING AND ANALYSIS PROGRAM
UNITS 2 & 3

LIQUID RELEASE TYPE	SAMPLING FREQUENCY[6]	MINIMUM ANALYSIS FREQUENCY[6]	TYPE OF ACTIVITY ANALYSIS	LOWER LIMIT OF DETECTION (LLD)[1] (μCi/ml)
A. Batch Release Tanks	Prior to Each Batch	Prior to Each Batch	Principal Gamma Emitters[5] I-131	$5x10^{-7}$ $1x10^{-6}$
	Prior to Each Batch	M Composite[2]	Gross Alpha H-3	$1x10^{-7}$ $1x10^{-5}$
	Prior to Each Batch	Q Composite [2]	Fe-55 Sr-89, Sr-90	$1x10^{-6}$ $5x10^{-8}$
	Prior to One Batch/M	M	Dissolved & Entrained Gases [6] (Gamma Emitters)	$1x10^{-5}$
B. Plant Continuous Releases[4]	M[3] (Grab Sample)	M[3]	I-131	$1x10^{-6}$
	M[3] (Grab Sample)	M[3]	Principal Gamma Emitters[5]	$5x10^{-7}$
	M[3] (Grab Sample)	M[3]	Dissolved & Entrained Gases[6] (Gamma Emitters)	$1x10^{-5}$
	M[3] (Grab Sample)	M[3]	H-3	$1x10^{-5}$
			Gross Alpha	$1x10^{-7}$
	Q[3] (Grab Sample)	Q[3]	Sr-89, Sr-90	$5x10^{-8}$
			Fe-55	$1x10^{-6}$
C. Above Ground Liquid Storage Tanks	See TS 3/4.8.J	See TS 3/4.8.J	Principal Gamma Emitters[5] Dissolved & Entrained Gases[6] (Gamma Emitters)	$5x10^{-7}$ $1x10^{-5}$

TABLE 12.3-2 (Cont'd)
RADIOACTIVE LIQUID WASTE SAMPLING AND ANALYSIS PROGRAM
TABLE NOTATION

(1) The LLD is defined, for purposes of these specifications, as the smallest concentration of radioactive material in a sample that will yield a net count, above system background, that will be detected with 95% probability with only 5% probability of falsely concluding that a blank observation represents a "real" signal.

For a particular measurement system, which may include radiochemical separation:

$$LLD = \frac{4.66S_b}{E \cdot V \cdot 2.22 \times 10^6 \cdot Y \cdot \exp(-\lambda\Delta t)}$$

Where:

LLD = the lower limit of detection (microCuries per unit mass or volume),

s_b = the standard deviation of the background counting rate or of the counting rate of a blank sample as appropriate (counts per minute),

E = the counting efficiency (counts per disintegration),

V = the sample size (units of mass or volume),

2.22×10^6 = the number of disintegrations per minute per microCurie,

Y = the fractional radiochemical yield, when applicable,

λ= the radioactive decay constant for the particular radionuclide (sec $^{-1}$), and

Δt = the elapsed time between the midpoint of sample collection and the time of counting (sec).

Typical values of E, V, Y, and Δt should be used in the calculation.

Alternate LLD Methodology

An alternate methodology for LLD determination follows and is similar to the above LLD equation:

$$LLD = \frac{(2.71 + 4.65\sqrt{B}) \cdot \text{Decay}}{E\ q\ b\ Y\ t\ (2.22E06)}$$

TABLE 12.3-2 (Continued)
RADIOACTIVE LIQUID WASTE SAMPLING AND ANALYSIS PROGRAM
TABLE NOTATION

Where:

B = background sum (counts)

E = counting efficiency, (counts detected/disintegrations)

q = sample quantity, (mass or volume)

b = abundance, (if applicable)

Y = fractional radiochemical yield or collection efficiency, (if applicable)

t = count time (minutes)

2.22E06 = number of disintegrations per minute per microCurie

$(2.71 + 4.65\sqrt{B}) = k^2 + (2k \sqrt{2} \sqrt{B})$, and k = 1.645.

(k=value of the t statistic from the single-tailed t distribution at a significance level of 0.95% and infinite degrees of freedom. This means that the LLD result represents a 95% detection probability with a 5% probability of falsely concluding that the nuclide present when it is not or that the nuclide is not present when it is.)

Decay = $e^{\lambda\Delta t} [\lambda RT/(1-e^{-\lambda RT})] [\lambda T_d/(1-e^{-\lambda Td})]$, (if applicable)

λ = radioactive decay constant, (units consistent with Δt, RT and T_d)

Δt = "delta t", or the elapsed time between sample collection or the midpoint of sample collection and the time the count is started, depending on the type of sample, (units consistent with λ)

RT = elapsed real time, or the duration of the sample count, (units consistent with λ)

T_d = sample deposition time, or the duration of analyte collection onto the sample media, (unit consistent with λ)

The LLD may be determined using installed radioanalytical software, if available. In addition to determining the correct number of channels over which to total the background sum, utilizing the software's ability to perform decay corrections (i.e. during sample collection, from sample collection to start of analysis and during counting), this alternate method will result in a more accurate determination of the LLD.

It should be recognized that the LLD is defined as a before the fact limit and not as an after the fact limit for a particular measurement.

TABLE 12.3-2 (Cont'd)
RADIOACTIVE LIQUID WASTE SAMPLING AND ANALYSIS PROGRAM
TABLE NOTATION

(2) A composite sample is one in which the quantity of liquid samples is proportional to the quantity of liquid waste discharged and in which the method of sampling employed results in a specimen which is representative of the liquids released.

(3) If the alarm setpoint of the service water effluent monitor as determined in the ODCM is exceeded, the frequency of analysis shall be increased to daily until the condition no longer exists.

(4) A batch release is the discharge of liquid wastes of a discrete volume. Prior to sampling for analyses, each batch shall be isolated and then thoroughly mixed to assure representative sampling. A continuous release is the discharge of liquid wastes of a nondiscrete volume; e.g., from a volume or system that has an input flow during the release.

(5) The principal gamma emitters for which the LLD specification applies exclusively are the following radionuclides: Mn-54, Fe-59, Co-60, Zn-65, Co-58, Mo-99, Cs-134, Cs-137, Ce-141, and Ce-144. Other peaks which are measurable and identifiable by gamma ray spectrometry together with the above nuclides, shall be also identified and reported when the actual analysis is performed on a sample. Nuclides which are below the LLD for the analyses shall not be reported as being present at the LLD level for that nuclide.

(6) The dissolved and entrained gases (gamma emitters) for which the LLD specification applies exclusively are the following radionuclides: Kr-87, Kr-88, Xe-133, Xe-133m, Xe-135, and Xe-138. Other dissolved and entrained gases (gamma emitters) which are measurable and identifiable by gamma ray spectrometry, together with the above nuclides, shall also be identified and reported when an actual analysis is performed on a sample. Nuclides which are below the LLD for the analyses shall not be reported as being present at the LLD level for that nuclide.

12.3.C LIQUID EFFLUENTS BASES

1. Concentration

This specification is provided to ensure that the concentration of radioactive materials released in liquid waste effluents from the site to unrestricted areas will be less than the concentration levels specified in Appendix B, Table 2, Column 2 to 10CFR20.1001-20.2402.

2. Dose

This specification is provided to implement the requirements of Sections II.A, III.A and IV.A of Appendix I, 10 CFR Part 50. The operational requirements implements the guides set forth in Section II.A of Appendix I. The statements provide the required operating flexibility and at the same time implement the guides set forth in Section IV.A of Appendix I to assure that the releases of radioactive material in liquid effluents will be kept "as low as reasonably achievable". The dose calculations in the ODCM implement the requirements in Section III.A of Appendix I that conformance with the guides of Appendix I be shown by calculational procedures based on models and data such that the actual exposure of an individual through appropriate pathways is unlikely to be substantially underestimated. The equations specified in the ODCM for calculating the doses due to the actual release rates of radioactive materials in liquid effluents will be consistent with the methodology provided in Regulatory Guide 1.109, "Calculation of Annual Doses to Man from Routine Releases of Reactor Effluents for the Purpose of Evaluating Compliance with 10 CFR Part 50, Appendix I", Revision 1, October 1977 and Regulatory Guide 1.113, "Estimating Aquatic Dispersion of Effluents from Accidental and Routine Reactor Releases for the Purpose of Implementing Appendix I", April 1977. NUREG-0113 provides methods for dose calculations consistent with Reg Guide 1.109 and 1.113.

3. Liquid Waste Treatment

The operability of the liquid radwaste treatment system ensures that this system will be available for use whenever liquid effluents require treatment prior to release to the environment. The requirement that the appropriate portions of this system be used when specified provides assurance that the releases of radioactive materials in liquid effluents will be kept "as low as reasonably achievable". This specification implements the requirements of 10 CFR Part 50.36a, General Design Criterion 60 of Appendix A to 10 CFR Part 50 and design objective Section 11.D of Appendix I to 10 CFR Part 50.

12.3.C LIQUID EFFLUENTS BASES - (Continued)

4. Mechanical Vacuum Pump

The purpose of isolating the mechanical vacuum line is to limit release of activity from the main condenser. During an accident, fission products would be transported from the reactor through the main steam line to the main condenser. The fission product radioactivity would be sensed by the main steamline radioactivity monitors which initiate isolation.

12.4 GASEOUS EFFLUENTS

A. Gaseous Effluents Limits and Reporting Operability

1. Dose Rate

The dose rate in unrestricted areas at or beyond the site boundary (Dresden Station ODCM Annex, Appendix F, Figure F-1) due to radioactive materials released in gaseous effluents from the site shall be limited to the following.

1. For Noble Gases:

   (1) Less than a dose rate of 500 mrem/year to the whole body.
   (2) Less than a dose rate of 3000 mrem/year to the skin.

2. For iodine-131, for iodine-133, tritium and for all radionuclides in particulate form with half-lives greater than 8 days, less than a dose rate of 1500 mrem/year.

3. If the dose rates exceed the above limits, without delay decrease the release rates to bring the dose rates within the limits, and provide notification to the Commission (per 10 CFR Part 20.2203).

2. Noble Gas Dose

The air dose in unrestricted areas at or beyond the site boundary due to noble gases released in gaseous effluents from the unit shall be limited to the following:

1. For Gamma Radiation

   (1) Less than or equal to 5 mrad during any calendar quarter.
   (2) Less than or equal to 10 mrad during any calendar year.

2. For Beta Radiation

   (1) Less than or equal to 10 mrad during any calendar quarter.
   (2) Less than or equal to 20 mrad during any calendar year.

3. With the calculated air dose from radioactive noble gases in gaseous effluents exceeding any of the above limits, prepare and submit to the Commission within 30 days, a Special Report which identifies the cause(s) for exceeding the limit(s) and defines the corrective actions to be taken to ensure that future releases are in compliance with Sections 12.4.A.2.1 and 12.4.A.2.2. This is in lieu of a Licensee Event Report.

12.4.A Gaseous Effluents Limits and Reporting Operability (Cont'd)

4. With the calculated air dose from radioactive noble gases in gaseous effluents exceeding the limits of Sections 12.4.A.2.1 or 12.4.A.2.2, prepare and submit a Special Report to the Commission within 30 days and limit the subsequent releases such that the doses or dose commitment to a member of the public from all uranium fuel cycle sources is limited to less than or equal to 25 mrem to the total body or any organ (except thyroid, which is limited to less than or equal to 75 mrem) over 12 consecutive months. This Special Report shall include an analysis which demonstrates that radiation exposures to all members of the public from all uranium fuel cycle sources (including all effluent pathways and direct radiation) are less than 40 CFR Part 190 Standard. Otherwise, obtain a variance from the Commission to permit releases which exceed the 40CFR Part 190 Standard. The radiation exposure analysis contained in the Special Report shall use the methods prescribed in the ODCM. This report is in lieu of a Licensee Event Report.

5. Process and control equipment provided to reduce the amount or concentration of radioactive materials shall be operated when the projected dose due to gaseous effluents released to the unrestricted areas, when averaged over 31 days, exceeds 2% of the annual dose limits of Appendix I to 10CFR50.

3. Iodine-131, Iodine-133, Tritium, and Particulate Dose

The dose to a member of the public in unrestricted areas at or beyond the site boundary from iodine-131, iodine-133, tritium, and all radionuclides in particulate form with half-lives greater than 8 days in gaseous effluents released from the unit shall be limited to the following.

1. Less than or equal to 7.5 mrem to any organ during any calendar quarter.

2. Less than or equal to 15 mrem to any organ during any calendar year.

3. With the calculated dose from the release of iodine-131, iodine-133, tritium, and all radionuclides in particulate form with half-lives greater than 8 days in gaseous effluents exceeding any of the above limits, prepare and submit to the Commission within 30 days, a Special Report which identifies the cause(s) for exceeding the limit and defines the corrective actions taken to ensure that future releases are in compliance with Section 12.4.A.3.1 and 12.4.A.3.2. This is in lieu of a Licensee Event Report.

4. With the calculated dose from the release of iodine-131, iodine-133, tritium, and all radionuclides in particulate form with half-lives greater than 8 days in gaseous effluents exceeding the limits of Sections 12.4.A.3.1. or 12.4.A.3.2., prepare and submit a Special Report to the Commission within 30 days and limit subsequent releases such that the dose or dose commitment to a member of the public from all uranium fuel sources

12.4.A Gaseous Effluents Limits and Reporting Operability (Cont'd)

is limited to less than or equal to 25 mrem to the total body or organ (except the thyroid, which is limited to less than or equal to 75 mrem) over 12 consecutive months. This Special Report shall include an analysis which demonstrates that radiation exposures to all members of the public from all uranium fuel cycle sources (including all effluent pathways and direct radiation) are less than the 40 CFR Part 190 Standard. Otherwise, obtain a variance from the Commission to permit releases which exceed the 40 CFR Part 190 Standard. The radiation exposure analysis contained in the Special Report shall use the methods prescribed in the ODCM. This report is in lieu of a Licensee Event Report.

5. Process and control equipment provided to reduce the amount or concentration of radioactive materials shall be operated when the projected dose due to gaseous effluents released to the unrestricted areas, when averaged over 31 days, exceeds 2% of the annual dose limits of Appendix I to 10CFR50.

4. Off-Gas Treatment

1. At all times during processing for discharge to the environs, process and control equipment provided to reduce the amount of concentration of radioactive materials shall be operated.

2. The above specification shall not apply for the Off-Gas Charcoal Adsorber Beds below 30 percent of rated thermal power.

3. The recombiner shall be operable whenever the reactor is operating at a pressure greater than 900 psig.

4. The recombiner may be inoperable for 48 hours.

5. With either the recombiners inoperable, or all charcoal beds by-passed for more than 7 days in a calendar quarter while operating above 30 percent of the rated thermal power, prepare and submit to the Commission within 30 days a Special Report which includes the following information.

   a. Identification of the defective equipment.

   b. Cause of the defect in the equipment.

   c. Action(s) taken to restore the equipment to an operating status.

   d. Length of time the above requirements were not satisfied.

   e. Volume and curie content of the waste discharged which was not processed by the inoperable equipment but which required processing.

12.4.A Gaseous Effluents Limits and Reporting Operability (Cont'd)

f. Action(s) taken to prevent a recurrence of equipment failures.

This is in lieu of a Licensee Event Report.

5. Main Condenser Air Ejector

The release rate of the sum of the activities from the noble gases measured at the main condenser air ejector shall be limited to ≤ 100 microcuries/sec per MWt (after 30 minutes decay) when in modes 1,2[a], and 3[a]. With the release rate of the sum of the activities from noble gases at the main condenser air ejector effluent (as measured prior to the offgas holdup line) > 100 microcuries/sec per MWt, after 30 minutes decay, restore the release rate to within its limits within 72 hours, or be in at least STARTUP with the main steam isolation valves closed within the next 8 hours. (Refer to Technical Specification 3.8.I.)

6. System Operability and Plant Operations

In the event a limit and/or associated action requirements identified in Sections 12.4.A and 12.4.B cannot be satisfied because of circumstances in excess of those addressed in this Section, no changes are required in the operational condition of the plant, and this does not prevent the plant from entry into any operational mode.

[a]When the main condenser air ejector is in operation.

12.4.B Gaseous Effluents Surveillance

1. Dose Rate

The dose rates due to radioactive materials released in gaseous effluents from the site shall be determined to be within the prescribed limits by obtaining representative samples in accordance with the sampling and analysis program specified in Table 12.4-1. The dose rates are calculated using methods prescribed in the ODCM.

2. Noble Gas Dose

The air dose due to releases of radioactive noble gases in gaseous effluents shall be determined to be within the prescribed limits by obtaining representative samples in accordance with the sampling and analysis program specified in Sections A and B of Table 12.4-1. The allocation of effluents between units having shared effluent control system and the determination of cumulative and projected dose contributions for the current calendar quarter and current calendar year shall be determined in accordance with the methodology and parameters in the ODCM at least once every 31 days.

3. Iodine-131, Iodine-133, Tritium and Particulate Dose

The dose to a member of the public due to releases of iodine-131, iodine-133, tritium, and all radionuclides in particulate form with half-lives greater than 8 days shall be determined to be within the prescribed limits by obtaining representative samples in accordance with the sampling and analysis program specified in Table 12.4-1.

For radionuclides not determined in each batch or weekly composite, the dose contribution to the current calendar quarter cumulative summation may be estimated by assuming an average monthly concentration based on the previous monthly or quarterly composite analyses. However, for reporting purposes, the calculated dose contributions shall be based on the actual composite analyses when possible.

The allocation of effluents between units having shared effluent control system and the determination of cumulative and projected dose contributions for the current calendar quarter and current calendar year shall be determined in accordance with the methodology and parameters in the ODCM at least once every 31 days.

4. Off-Gas Treatment

Doses due to treated gases released to unrestricted areas at or beyond the site boundary shall be projected at least once per 31 days in accordance with the ODCM.

12.4.B Gaseous Effluents Surveillance - Continued

5. Noble Gases at the Main Condenser Air Ejector

The release rate of noble gases from the main condenser air ejector shall be continuously monitored. The release rate of the sum of the activities from noble gases from the main condenser air ejector shall be determined to be within the limits of 12.4.A.5 at the following frequencies by performing an isotopic analysis of a representative sample of gases taken at the recombiner outlet, or at the air ejector outlet if the recombiner is by-passed.

1. At least once per 31 days.

2. Within 4 hours following determination of an increase of greater than 50%.

(Refer to Technical Specification 4.8.I.)

TABLE 12.4-1

RADIOACTIVE GASEOUS WASTE SAMPLING
AND ANALYSIS PROGRAM
UNIT 1

GASEOUS RELEASE TYPE	SAMPLING FREQUENCY	MINIMUM ANALYSIS FREQUENCY	TYPE OF ACTIVITY ANALYSIS	LOWER LIMIT OF DETECTION (LLD)[1] (µCi/ml)
A. Main Chimney	M (Grab Sample)	M	Principal Gamma Emitters [5] Tritium Noble Gases	$1x10^{-4}$ $1x10^{-6}$ $1x10^{-6}$
	M[4,6] (Continuous)	M [3] Iodine Sample	I-131 I-133	$1x10^{-12}$ $1x10^{-10}$
	M[6] (Continuous)	M [3] Particulate Sample	Principal Gamma Emitters [5]	$1x10^{-11}$
	Q (Continuous)	Q Composite Particulate Sample	Sr-89, Sr-90 Gross Alpha	$1x10^{-11}$

Table 12.4-1

RADIOACTIVE GASEOUS WASTE SAMPLING
AND ANALYSIS PROGRAM
UNITS 2 & 3

GASEOUS RELEASE TYPE	SAMPLING FREQUENCY	MINIMUM ANALYSIS FREQUENCY	TYPE OF ACTIVITY ANALYSIS	LOWER LIMIT OF DETECTION (LLD)[1] (μCi/ml)
A. Main Chimney Reactor Bldg. Vent Stack	M (Grab Sample)	M[2] M	Principal Gamma Emitters[5] Tritium	$1x10^{-4}$ $1x10^{-6}$
B. All Release Types as Listed in A above	Continuous[4]	W[3] Iodine Sample	I-131 I-133	$1x10^{-12}$ $1x10^{-10}$
	Continuous[4]	W[3] Particulate Sample	Principal Gamma Emitters [5]	$1x10^{-11}$
	Continuous[4]	Q Composite Particulate Sample	Sr-89 Sr-90	$1x10^{-11}$ $1x10^{-11}$
	Continuous[4]	Q Composite Particulate Sample	Gross Alpha	$1x10^{-11}$
C. Main Chimney	Continuous[4]	Noble Gas Monitor	Noble Gases	$1x10^{-6}$
D. Reactor Bldg. Vent Stack	Continuous[4]	Noble Gas Monitor	Noble Gases	$1x10^{-4}$

TABLE 12.4-1 (Cont'd)

RADIOACTIVE GASEOUS WASTE SAMPLING AND ANALYSIS PROGRAM
TABLE NOTATION

(1) The LLD is defined, for purposes of these specifications, as the smallest concentration of radioactive material in a sample that will yield a net count, above system background, that will be detected with 95% probability with only 5% probability of falsely concluding that a blank observation represents a "real" signal.

For a particular measurement system, which may include radiochemical separation:

$$LLD = \frac{4.66S_b}{E \cdot V \cdot 2.22 \times 10^6 \cdot Y \cdot \exp(-\lambda\Delta t)}$$

Where:

LLD = the lower limit of detection (microCuries per unit mass or volume),

s_b = the standard deviation of the background counting rate or of the counting rate of a blank sample as appropriate (counts per minute),

E = the counting efficiency (counts per disintegration),

V = the sample size (units of mass or volume),

2.22×10^6 = the number of disintegrations per minute per microCurie,

Y = the fractional radiochemical yield, when applicable,

λ= the radioactive decay constant for the particular radionuclide (sec^{-1}), and

Δt = the elapsed time between the midpoint of sample collection and the time of counting (sec).

Typical values of E, V, Y, and Δt should be used in the calculation.

Alternate LLD Methodology

An alternate methodology for LLD determination follows and is similar to the above LLD equation:

$$LLD = \frac{(2.71 + 4.65\sqrt{B}) \cdot \text{Decay}}{E\ q\ b\ Y\ t\ (2.22E06)}$$

TABLE 12.4-1 (Continued)

RADIOACTIVE GASEOUS WASTE SAMPLING AND ANALYSIS PROGRAM
TABLE NOTATIONS

Where:

B = background sum (counts)

E = counting efficiency, (counts detected/disintegrations)

q = sample quantity, (mass or volume)

b = abundance, (if applicable)

Y = fractional radiochemical yield or collection efficiency, (if applicable)

t = count time (minutes)

2.22E06 = number of disintegrations per minute per microCurie

$(2.71 + 4.65\sqrt{B}) = k^2 + (2k \sqrt{2} \sqrt{B})$, and k = 1.645.

(k=value of the t statistic from the single-tailed t distribution at a significance level of 0.95% and infinite degrees of freedom. This means that the LLD result represents a 95% detection probability with a 5% probability of falsely concluding that the nuclide present when it is not or that the nuclide is not present when it is.)

Decay = $e^{\lambda\Delta t} [\lambda RT/(1-e^{-\lambda RT})] [\lambda T_d/(1-e^{-\lambda Td})]$, (if applicable)

λ = radioactive decay constant, (units consistent with Δt, RT and T_d)

Δt = "delta t", or the elapsed time between sample collection or the midpoint of sample collection and the time the count is started, depending on the type of sample, (units consistent with λ)

RT = elapsed real time, or the duration of the sample count, (units consistent with λ)

T_d = sample deposition time, or the duration of analyte collection onto the sample media, (unit consistent with λ)

The LLD may be determined using installed radioanalytical software, if available. In addition to determining the correct number of channels over which to total the background sum, utilizing the software's ability to perform decay corrections (i.e. during sample collection, from sample collection to start of analysis and during counting), this alternate method will result in a more accurate determination of the LLD.

It should be recognized that the LLD is defined as a before the fact limit and not as an after the fact limit for a particular measurement.

TABLE 12.4-1 (Cont'd)

RADIOACTIVE GASEOUS WASTE SAMPLING AND ANALYSIS PROGRAM
TABLE NOTATION

(2) Sampling and analyses shall also be performed following shutdown, startup, or a thermal power change exceeding 20 percent of rated thermal power in 1 hour unless (1) analysis shows that the dose equivalent I-131 concentration in the primary coolant has not increased more than a factor of 5, and (2) the noble gas activity monitor shows that effluent activity has not increased by more than a factor of 3.

(3) Samples shall be changed at least once per 7 days and the analyses completed within 48 hours after removal from the sampler. Sampling shall also be performed within 24 hours following each shutdown, startup, or thermal power level change exceeding 20% of rated thermal power in one hour. This requirement does not apply if 1) analysis shows that the dose equivalent I-131 concentration in the primary coolant has not increased more than a factor of 5, and 2) the noble gas activity monitor shows that effluent activity has not increased by more than a factor of 3. When samples collected for 24 hours are analyzed, the corresponding LLDs may be increased by a factor of 10.

(4) The ratio of sample flow rate to the sampled stream flow rate shall be known.

(5) The principal gamma emitters for which the LLD specification applies exclusively are the following radionuclides: Kr-87, Kr-88, Xe-133, Xe-133m, Xe-135, and Xe-138 for gaseous emissions, and Mn-54, Fe-59, Co-60, Zn-65, Co-58, Mo-99, Cs-134, Cs-137, Ce-141, and Ce-144 for particulate emissions. Other peaks which are measurable and identifiable by gamma ray spectrometry, together with the above nuclides, shall be also identified and reported when an actual analysis is performed on a sample. Nuclides which are below the LLD for the analyses shall not be reported as being present at the LLD level for the nuclide.

(6) Analysis frequency shall be increased to 1/week if release rates exceed 1% of any applicable limit referenced in the ODCM, when added to Units 2 and 3 airborne effluents.

12.4.C Gaseous Effluents Bases

1. Gaseous Effluents, Dose

This Section is provided to ensure that the dose at the unrestricted area boundary from gaseous effluents from the units on site will be within the annual dose limits of 10CFR20 for unrestricted areas. These limits provide reasonable assurance that radioactive material discharged in gaseous effluents will not result in the exposure of an individual in an unrestricted area to annual average concentrations exceeding the limits specified in Appendix B, Table 2 of 10CFR20.1001-2402. The release rate limits restrict, at all times, the corresponding gamma and beta dose rates above background to an individual at or beyond the unrestricted area boundary to less than or equal to 500 mrem/year to the total body or to less than or equal to 3000 mrem/year to the skin. These release rate limits also restrict, at all times, the corresponding thyroid dose rate above background via the inhalation pathway to less than or equal to 1500 mrem/year. For purposes of calculation doses resulting from airborne releases, the main chimney is considered to be an elevated release point and the reactor building vent stack is considered to be a mixed mode release point.

2. Dose, Noble Gases

This Section is provided to implement the requirements of Sections II.B, III.A and IV.A of Appendix I, 10 CFR Part 50. The Operability Requirements implement the guides set forth in Section II.3 of Appendix I. The statements provide the required operating flexibility and at the same time implement the guides set forth in Section IV.A of Appendix I to assure that the releases of radioactive material in gaseous effluents will be kept "as low as is reasonably achievable." The surveillance requirements implement the requirements in Section III.A of Appendix I that conformance with the guides of Appendix I is to be shown by calculational procedures based on models and data such that the actual exposure of an individual through the appropriate pathways is unlikely to be substantially underestimated. The dose calculations established in the ODCM for calculating the doses due to the actual release rates of radioactive noble gases in gaseous effluents will be consistent with the methodology provided in Regulatory Guide 1.109, "Calculation of Annual Doses to Man from Routine Releases of Reactor Effluents for the Purpose of Evaluating Compliance with 10 CFR Part 50, Appendix I," Revision 1, October 1977 and Regulatory Guide 1.111, "Methods for Estimating Atmospheric Transport and Dispersion of Gaseous Effluents in Routine Releases from Light-Water Cooled Reactors," Revision 1, July 1977. NUREG-0133 provides methods for dose calculations consistent with Regulatory Guides 1.109 and 1.111.

12.4.C Gaseous Effluents Bases (Cont'd)

3. Dose, Radioiodines, Radioactive Material in Particulate Form and Radionuclides Other than Noble Gases

This Section is provided to implement the requirements of Sections II.C, III.A and IV.A of Appendix I, 10 CFR Part 50. The Operability Requirements are the guides set forth in Section II.C of Appendix I. The statements provide the required operating flexibility and at the same time implement the guides set forth in Section IV.A of Appendix I to assure that the releases of radioactive materials in gaseous effluents will be kept "as low as reasonably achievable." The ODCM calculational methods specified in the surveillance requirements implement the requirements in Section III.A of Appendix I that conformance with the guides of Appendix I be shown by calculational procedures based on models and data such that the actual exposure of an individual through appropriate pathways is unlikely to be substantially underestimated. The ODCM calculational methods approved by NRC for calculating the doses due to the actual release rates of the subject materials are required to be consistent with the methodology provided in Regulatory Guide 1.109. "Calculation of Annual Doses to Man from Routine Releases of Reactor Effluents for the Purpose of Evaluating Compliance with 10 CFR Part 50, Appendix I", Revision 1, October 1977 and Regulatory Guide 1.111, "Methods for Estimating Atmospheric Transport and Dispersion of Gaseous Effluents in Routine Releases from Light-Water-Cooled Reactors," Revision 1, July 1977. These equations also provide for determining the actual doses based upon the historical average atmospheric conditions. The release rate limits for radioiodines, radioactive material in particulate form and radionuclides other than noble gases are dependent on the existing radionuclide pathways to man, in the unrestricted area. The pathways which were examined in the development of these limits were: 1) individual inhalation of airborne radionuclides, 2) deposition of radionuclides onto green leafy vegetation with subsequent consumption by man and 3) deposition onto grassy areas where milk animals graze with consumption of the milk by man.

4. Gaseous Waste Treatment

The operability of the gaseous waste treatment which reduces amounts or concentrations of radioactive materials ensures that the system will be available for use whenever gaseous effluents require treatment prior to release to the environment. The requirement that the appropriate portions of this system be operable when specified provides reasonable assurance that the releases of radioactive materials in gaseous effluents will be kept "as low as reasonably achievable". This specification implements the requirements of 10 CFR Part 50.36a, General Design Criterion 60 of Appendix A to 10 CFR Part 50, and design objective Section II.D of Appendix I to 10 CFR Part 50.

12.5 RADIOLOGICAL ENVIRONMENTAL MONITORING PROGRAM

12.5.1 Monitoring Program

Operability Requirements

12.5.1.A The Radiological Environmental Monitoring Program shall be conducted as specified in Table 12.5-1.

Applicability: At all times.

Action:

1. With the Radiological Environmental Monitoring Program not being conducted as specified in Table 12.5-1, prepare and submit to the Commission, in the Annual Radiological Environmental Operating Report required by Section 12.6.1, a description of the reasons for not conducting the program as required and the plans for preventing a recurrence.

   Deviations are permitted from the required sampling schedule if specimens are unobtainable due to hazardous conditions, seasonal availability, malfunction of sampling equipment, if a person/business who participates in the program goes out of business or no longer can provide sample, or contractor omission which is corrected as soon as discovered. If the equipment malfunctions, corrective actions shall be completed as soon as practical. If a person/business supplying samples goes out of business, a replacement supplier shall be found as soon as possible. All deviations from the sampling schedule will be described in the Annual Radiological Environmental Operating Report.

2. With the level of radioactivity as the result of plant effluents in an environmental sampling medium at a specified location exceeding the reporting levels of Table 12.5-2 when averaged over any calendar quarter, prepare and submit to the Commission within 30 days, pursuant to Technical Specification 6.9.B, a Special Report that identifies the cause(s) for exceeding the limit(s) and defines the corrective actions to be taken to reduce radioactive effluents so that the potential annual dose* to a MEMBER OF THE PUBLIC is less than the calendar year limits of Section 12.3.A.2, 12.4.A.2, or 12.4.A.3. When more than one of the radionuclides in Table 12.5-2 are detected in the sampling medium, this report shall be submitted if:

$$\frac{\text{concentration (1)}}{\text{reporting level (1)}} + \frac{\text{concentration (2)}}{\text{reporting level (2)}} + \ldots \geq 1.0$$

   When radionuclides other than those in Table 12.5-2 are detected and are the result of plant effluents, this report shall be submitted if the potential annual dose* to A MEMBER OF THE PUBLIC from all radionuclides is equal to or greater than the calendar year limits of Section 12.3.A.2, 12.4.A.2, or 12.4.A.3. This report is not required if the measured level of radioactivity was not the result of plant effluents; however, in such an event, the condition shall be reported and described in the Annual Radiological Environmental Operating Report required by Section 12.6.1.

*The methodology and parameters used to estimate the potential annual dose to a MEMBER OF THE PUBLIC shall be indicated in this report.

12.5 RADIOLOGICAL ENVIRONMENTAL MONITORING PROGRAM (Continued)

3. If the sample type or sampling location(s) as required by Table 12.5-1 become(s) permanently unavailable , identify suitable alternative sampling media for the pathway of interest and/or specific locations for obtaining replacement samples and add them to the Radiological Environmental Monitoring Program as soon as practicable. The specific locations from which samples were unavailable may then be deleted from the monitoring program.

Prepare and submit controlled version of the ODCM within 180 days including a revised figure(s) and table reflecting the new location(s) with supporting information identifying the cause of the unavailability of samples and justifying the selection of new location(s) for obtaining samples.

Surveillance Requirements

12.5.1.B The radiological environmental monitoring program samples shall be collected pursuant to Table 12.5-1 from the specific locations given in the table and figure(s) in the ODCM, and shall be analyzed pursuant to the requirements of Table 12.5-1 and the detection capabilities required by Table 12.5-3.

Bases

12.5.1.C The Radiological Environmental Monitoring Program required by this section provides representative measurements of radiation and of radioactive materials in those exposure pathways and for those radionuclides that lead to the highest potential radiation exposures of MEMBERS OF THE PUBLIC resulting from the station operation. This monitoring program implements Section IV.B.2 of Appendix I to 10 CFR Part 50 and thereby supplements the radiological effluent monitoring program by verifying that the measurable concentrations of radioactive materials and levels of radiation are not higher than expected on the basis of the effluent measurements and the modeling of the environmental exposure pathways. Guidance for this monitoring program is provided by the Radiological Assessment Branch Technical Position on Environmental Monitoring. The initially specified monitoring program will be effective for at least the first 3 years of commercial operation. Following this period, program changes may be initiated based on operational experience.

The required detection capabilities for environmental sample analyses are tabulated in terms of the lower limits of detection (LLDs). The LLDs required by Table 12.5-3 are considered optimum for routine environmental measurements in industrial laboratories. It should be recognized that the LLD is defined as a before the fact limit representing the capability of a measurement system and not as an after the fact limit for a particular measurement.

Detailed discussion of the LLD, and other detection limits, can be found in HASL Procedures Manual, HASL-300 (revised annually), Currie, LA., "Limits for Qualitative Detection and Quantitative Determination - Application to Radiochemistry," Anal. Chem. 40, 586-93 (1968), and Hartwell, J.K., "Detection Limits for Radioanalytical Counting Techniques," Atlantic Richfield Hanford Company Report ARH-SA-215 (June 1975).

12.5 RADIOLOGICAL ENVIRONMENTAL MONITORING PROGRAM (Continued)

Interpretations

12.5.1.D Table 12.5-1 requires "one sample of each community drinking water supply downstream of the plant within 10 kilometers." Drinking water supply is defined as water taken from rivers, lakes, or reservoirs (not well water) which is used for drinking.

TABLE 12.5-1

RADIOLOGICAL ENVIRONMENTAL MONITORING PROGRAM

EXPOSURE PATHWAY AND/ OR SAMPLE	NUMBER OF REPRESENTATIVE SAMPLES AND SAMPLE LOCATIONS[1]	SAMPLING AND COLLECTION FREQUENCY	TYPE AND FREQUENCY OF ANALYSIS
1. Airborne Radioiodine and Particulates	Samples from a total of eight locations: a. Indicator- Near Field Four samples from locations within 4 km (2.5 mi) in different sectors. b. Indicator- Far Field Four additional locations within 4 to 10 km (2.5 to 6.2 mi) in different sectors. c. Control One sample from a control location within 10 to 30 km (6.2 to 18.6 mi).	Continuous particulate sampler operation with sample collection weekly, or more frequently if required due to dust loading, and radioiodine canister collection biweekly.	Radioiodine Canister: I-131 analysis biweekly on near field samples and control.[2] Particulate Sampler: Gross beta analysis following weekly filter change[3] and gamma isotopic analysis[4] quarterly on composite filters by location on near field samples and control.[2]

TABLE 12.5-1 (Continued)

RADIOLOGICAL ENVIRONMENTAL MONITORING PROGRAM

EXPOSURE PATHWAY AND/ OR SAMPLE	NUMBER OF REPRESENTATIVE SAMPLES AND SAMPLE LOCATIONS[1]	SAMPLING AND COLLECTION FREQUENCY	TYPE AND FREQUENCY OF ANALYSIS
2. Direct Radiation[5]	Forty routine monitoring stations either with a thermoluminescent dosimeter (TLD) or with one instrument for measuring dose rate continuously, placed as follows: a. Indicator- Inner Ring (100 Series TLD) One in each meteorological sector, in the general area of the SITE BOUNDARY (0.1 to 2 miles); b. Indicator- Outer Ring (200 Series TLD) One in each meteorological sector, within 3.2 to 10 km (2 to 6.2 mi); and c. Other One at each Airborne location given in part 1.a. and 1.b. The balance of the TLDs to be placed at special interest locations beyond the Restricted Area where either a MEMBER OF THE PUBLIC or Commonwealth Edison employees have routine access. (300 Series TLD)	Quarterly	Gamma dose on each TLD quarterly.

TABLE 12.5-1 (Continued)

RADIOLOGICAL ENVIRONMENTAL MONITORING PROGRAM

EXPOSURE PATHWAY AND/ OR SAMPLE	NUMBER OF REPRESENTATIVE SAMPLES AND SAMPLE LOCATIONS[1]	SAMPLING AND COLLECTION FREQUENCY	TYPE AND FREQUENCY OF ANALYSIS
2. Direct Radiation[5] (Cont'd)	d. Control One at each Airborne control location given in part 1.c	Quarterly	Gamma dose on each TLD quarterly.
3. Waterborne a. Ground/ Well	a. Indicator Samples from three sources only if likely to be affected.[6]	Quarterly	Gamma isotopic[4] and tritium analysis quarterly.
b. Drinking[7]	a. Indicator One Sample from each community drinking water supply that could be affected by the station discharge within 10 km (6.2 mi) downstream of discharge.	Weekly grab samples.	Gross beta and gamma isotopic analyses[4] on monthly composite; tritium analysis on quarterly composite.
c. Surface Water[7]	If no community water supply (Drinking Water) exists within 10 km downstream of discharge then surface water sampling shall be performed. a. Indicator One sample downstream	Weekly grab samples.	Gross beta and gamma isotopic analyses[4] on monthly composite; tritium analysis on quarterly composite.
d. Control Sample[7]	a. Control One surface sample upstream of discharge.	Weekly grab samples.	Gross beta and gamma isotopic analyses[4] on monthly composite; tritium analysis on quarterly composite.

TABLE 12.5-1 (Continued)

RADIOLOGICAL ENVIRONMENTAL MONITORING PROGRAM

EXPOSURE PATHWAY AND/ OR SAMPLE	NUMBER OF REPRESENTATIVE SAMPLES AND SAMPLE LOCATIONS[1]	SAMPLING AND COLLECTION FREQUENCY	TYPE AND FREQUENCY OF ANALYSIS
e. Sediment	a. Indicator At least one sample from downstream[7] area within 10 km (6.2 mi).	Semiannually.	Gamma isotopic analysis[4] semiannually.
4. Ingestion a. Milk[8]	a. Indicator Samples from milking animals from a maximum of three locations within 10 km (6.2 mi) distance. b. Control One sample from milking animals at a control location within 10 to 30 km (6.2 to 18.6 mi).	Biweekly [9] when animals are on pasture (May through October), monthly at other times (November through April).	Gamma isotopic[4] and I-131[10] analysis on each sample.
b. Fish	a. Indicator Representative samples of commercially and recreationally important species in discharge area. b. Control Representative samples of commercially and recreationally important species in control locations upstream of discharge.	Two times annually.	Gamma isotopic analysis[4] on edible portions

TABLE 12.5-1 (Continued)

RADIOLOGICAL ENVIRONMENTAL MONITORING PROGRAM

EXPOSURE PATHWAY AND/ OR SAMPLE	NUMBER OF REPRESENTATIVE SAMPLES AND SAMPLE LOCATIONS[1]	SAMPLING AND COLLECTION FREQUENCY	TYPE AND FREQUENCY OF ANALYSIS
c. Food Products	a. Indicator Two representative samples from the principal food pathways grown in each of four major quadrants within 10 km (6.2 mi): At least one root vegetable sample[11] At least one broad leaf vegetable (or vegetation)[11] b. Control Two representative samples similar to indicator samples grown within 15 to 30 km (9.3 to 18.6 mi).	Annually	Gamma isotopic[4] analysis on each sample.

TABLE 12.5-1 (Continued)
RADIOLOGICAL ENVIRONMENTAL MONITORING PROGRAM
TABLE NOTATIONS

(1) Specific parameters of distance and direction from the centerline of the midpoint of the two units and additional description where pertinent, shall be provided for each and every sample location in Table 1.1-1 of the ODCM Station Annexes. Refer to NUREG-0133, "Preparation of Radiological Effluent Technical Specifications for Nuclear Power Plants," October 1978, and to Radiological Assessment Branch Technical Position, Revision 1, November 1979.

(2) Far field samples are analyzed when the respective near field sample results are inconsistent with previous measurements and radioactivity is confirmed as having its origin in airborne effluents from the station, or at the discretion of the Radiation Protection Director.

(3) Airborne particulate sample filters shall be analyzed for gross beta radioactivity 24 hours or more after sampling to allow for radon and thoron daughter decay. If gross beta activity in air particulate samples is greater than 10 times the yearly mean of control samples, gamma isotopic analysis shall be performed on the individual samples.

(4) Gamma isotopic analysis means the identification and quantification of gamma emitting radionuclides that may be attributable to the effluents from the station.

(5) One or more instruments, such as a pressurized ion chamber, for measuring and recording dose rate continuously may be used in place of, or in addition to, integrating dosimeters. Film badges shall not be used as dosimeters for measuring direct radiation. The 40 locations is not an absolute number. The number of direct radiation monitoring stations may be reduced according to geographical limitations; e.g., If a station is adjacent to a lake, some sectors may be over water thereby reducing the number of dosimeters which could be placed at the indicated distances. The frequency of analysis or readout for TLD systems will depend upon the characteristics of the specific system used and should be selected to obtain optimum dose information with minimal fading.

(6) Groundwater samples shall be taken when this source is tapped for drinking or irrigation purposes in areas where the hydraulic gradient or recharge properties are suitable for contamination.

(7) The "downstream" sample shall be taken in an area beyond but near the mixing zone. The "upstream sample" shall be taken at a distance beyond significant influence of the discharge. Upstream samples in an estuary must be taken far enough upstream to be beyond the station influence.

(8) If milking animals are not found in the designated indicator locations, or if the owners decline to participate in the REMP, all milk sampling may be discontinued.

(9) Biweekly refers to every two weeks.

(10) I-131 analysis means the analytical separation and counting procedure are specific for this radionuclide.

(11) One sample shall consist of a volume/weight of sample large enough to fill contractor specified container.

TABLE 12.5-2

REPORTING LEVELS FOR RADIOACTIVITY CONCENTRATIONS IN ENVIRONMENTAL SAMPLES
REPORTING LEVELS

ANALYSIS	WATER (pCi/l)	AIRBORNE PARTICULATE OR GASES (pCi/m^3)	FISH (pCi/kg, wet)	MILK (pCi/l)	FOOD PRODUCTS (pCi/kg, wet)
H-3	20,000(1)				
Mn-54	1,000		30,000		
Fe-59	400		10,000		
Co-58	1,000		30,000		
Co-60	300		10,000		
Zn-65	300		20,000		
Zr-Nb-95	400				
I-131	2(2)	0.9		3	100
Cs-134	30	10	1,000	60	1,000
Cs-137	50	20	2,000	70	2,000
Ba-La-140	200			300	

(1) For drinking water samples. This is 40 CFR Part 141 value. If no drinking water pathway exists, a value of 30,000 pCi/l may be used.

(2) If no drinking water pathway exists, a value of 20 pCi/l may be used.

TABLE 12.5-3

DETECTION CAPABILITIES FOR ENVIRONMENTAL SAMPLE ANALYSIS[1]

LOWER LIMIT OF DETECTION (LLD)[2][3]

ANALYSIS	WATER (pCi/l)	AIRBORNE PARTICULATE OR GASES (pCi/m^3)	FISH (pCi/kg, wet)	MILK (pCi/l)	FOOD PRODUCTS (pCi/kg, wet)	SEDIMENT (pCi/kg, dry)
Gross Beta	4	0.01	1000			
H-3	2,000[7]					
Mn-54	15		130			
Fe-59	30		260			
Co-58,60	15		130			
Zn-65	30		260			
Zr-Nb-95	15					
I-131[6]	1/15[4]	0.07	100	0.5/5[5]	60	
Cs-134	15	0.01	100	15	60	150
Cs-137	18	0.01	100	18	80	180
Ba-La-140	15			15		

TABLE 12.5-3 (Continued)
DETECTION CAPABILITIES FOR ENVIRONMENTAL SAMPLE ANALYSIS
TABLE NOTATIONS

(1) The nuclides on this list are not the only nuclides intended to be considered. Other peaks that are identifiable, together with those of the above nuclides, shall also be analyzed and reported in the Annual Radiological Environmental Operating Report.

(2) Required detection capabilities for thermoluminescent dosimeters used for environmental measurements shall be in accordance with the recommendations of Regulatory Guide 4.13.

(3) The Lower Limit of Detection (LLD) is defined, for purposes of these specifications, as the smallest concentration of radioactive material in a sample that will yield a net count, above system background, that will be detected with 95% probability with only 5% probability of falsely concluding that a blank observation represents a "real" signal.

For a particular measurement system, which may include radiochemical separation, the LLD is defined as follows:

$$LLD = \frac{4.66\ S_b + 3/t_b}{(E)\ (V)\ (2.22)\ (Y)\ (\exp(-\lambda\Delta t))}$$

$$LLD \sim \frac{4.66\ S_b}{(E)\ (V)\ (2.22)\ (Y)\ (\exp(-\lambda\Delta t))}$$

Where: $4.66\ S_b >> 3/t_b$

LLD = the "a priori" Minimum Detectable Concentration (picoCuries per unit mass or volume),

s_b = the standard deviation of the background counting rate or of the counting rate of a blank sample, as appropriate (counts per minute),

$$= \frac{\sqrt{Total\ Counts}}{t_b}$$

E = the counting efficiency(counts per disintegration),

V = the sample size (units of mass or volume),

2.22 = the number of disintegrations per minute per picoCurie,

Y = the fractional radiochemical yield, when applicable,

λ = the radioactive decay constant for the particular radionuclide (sec^{-1}),

TABLE 12.5-3 (Continued)
DETECTION CAPABILITIES FOR ENVIRONMENTAL SAMPLE ANALYSIS
TABLE NOTATIONS

t_b = counting time of the background or blank (minutes), and

Δt = the elapsed time between sample collection, or end of the sample collection period, and the time of counting (sec).

Typical values of E, V, Y, and Δt should be used in the calculation.

It should be recognized that the LLD is defined as a before the fact limit representing the capability of a measurement system and not as an after the fact limit for a particular measurement.

Analyses shall be performed in such a manner that the stated LLDs will be achieved under routine conditions. Occasionally, background fluctuations, unavoidable small sample sizes, the presence of interfering nuclides, or other uncontrollable circumstances may render these LLDs unachievable. In such cases, the contributing factors shall be identified and described in the Annual Radiological Environmental Operating Report.

Alternate LLD Methodology

An alternate methodology for LLD determination follows and is similar to the above LLD equation:

$$LLD = \frac{(2.71 + 4.65\sqrt{B}) \cdot \text{Decay}}{E\ q\ b\ Y\ t\ (2.22E06)}$$

Where:

B = background sum (counts)

E = counting efficiency, (counts detected/disintegrations)

q = sample quantity, (mass or volume)

b = abundance, (if applicable)

Y = fractional radiochemical yield or collection efficiency, (if applicable)

t = count time (minutes)

2.22E06 = number of disintegrations per minute per microCurie

$(2.71 + 4.65\sqrt{B}) = k^2 + (2k \sqrt{2} \sqrt{B})$, and k = 1.645.

(k=value of the t statistic from the single-tailed t distribution at a significance level of 0.95% and infinite degrees of freedom. This means that the LLD result represents a 95% detection probability with a 5% probability of falsely concluding that the nuclide present when it is not or that the nuclide is not present when it is.)

Decay = $e^{\lambda \Delta t} [\lambda RT/(1-e^{-\lambda RT})]\ [\lambda T_d/(1-e^{-\lambda Td})]$, (if applicable)

TABLE 12.5-3
DETECTION CAPABILITIES FOR ENVIRONMENTAL SAMPLE ANALYSIS
TABLE NOTATIONS

λ = radioactive decay constant, (units consistent with Δt, RT and T_d)

Δt = "delta t", or the elapsed time between sample collection or the midpoint of sample collection and the time the count is started, depending on the type of sample, (units consistent with λ)

RT = elapsed real time, or the duration of the sample count, (units consistent with λ)

T_d = sample deposition time, or the duration of analyte collection onto the sample media, (unit consistent with λ)

The LLD may be determined using installed radioanalytical software, if available. In addition to determining the correct number of channels over which to total the background sum, utilizing the software's ability to perform decay corrections (i.e. during sample collection, from sample collection to start of analysis and during counting), this alternate method will result in a more accurate determination of the LLD.

It should be recognized that the LLD is defined as a before the fact limit and not as an after the fact limit for a particular measurement.

(4) If no drinking water pathway exists, the value of 15 pCi/l may be used.

(5) A value of 0.5 pCi/l shall be used when the animals are on pasture (May through October) and a value of 5 pCi/l shall be used at all other times (November through April).

(6) This LLD applies only when the analytical separation and counting procedure are specific for this radionuclide.

(7) This LLD is the minimum allowable, however, vendors performing environmental sample analyses off-site will be required to meet an LLD of 200 pCi/l.

12.5.2 Land Use Census

Operability Requirements

12.5.2.A. A Land Use Census shall be conducted and shall identify within a distance of 10 km (6.2 miles) the location in each of the 16 meteorological sectors* of the nearest milk animal, the nearest residence**, and an enumeration of livestock. For dose calculation, a garden will be assumed at the nearest residence.

Applicability: At all times.

Action:

1. With a Land Use Census identifying a location(s) that yields a calculated dose or dose commitment, via the same exposure pathway 20% greater than at a location from which samples are currently being obtained in accordance with Section 12.5.1, add the new location(s) within 30 days to the Radiological Environmental Monitoring Program given in Chapter 11. The sampling location(s), excluding the control location, having the lowest calculated dose or dose commitment(s), via the same exposure pathway, may be deleted from this monitoring program after October 31 of the year in which this Land Use Census was conducted. Submit in the next Annual Radiological Environmental Operating Report documentation for a change in the ODCM including a revised figure(s) and table(s) for the ODCM reflecting the new location(s) with information supporting the change in sampling locations.

*This requirement may be reduced according to geographical limitations; e.g. at a lake site where some sector's will be over water.

**The nearest industrial facility shall also be documented if closer than the nearest residence.

Surveillance Requirements

12.5.2.B The Land Use Census shall be conducted during the growing season, between June 1 and October 1, at least once per 12 months using that information that will provide the best results, such as by a door-to-door survey, aerial survey, or by consulting local agriculture authorities. The results of the Land Use Census shall be included in the Annual Radiological Environmental Operating Report.

Bases

12.5.2.C This specification is provided to ensure that changes in the use of areas at and beyond the SITE BOUNDARY are identified and that modifications to the Radiological Environmental Monitoring Program given in the ODCM are made if required by the results of this census.

This census satisfies the requirements of Section IV.B.3 of Appendix I to 10 CFR Part 50. An annual garden census will not be required since the licensee will assume that there is a garden at the nearest residence in each sector for dose calculations.

12.5.3 Interlaboratory Comparison Program

Operability Requirements

12.5.3.A Analyses shall be performed on radioactive materials supplied as part of an Interlaboratory Comparison Program that correspond to samples required by Table 12.5-1.

Applicability: At all times.

Action:

1. With analyses not being performed as required above, report the corrective actions taken to prevent a recurrence to the Commission in the Annual Radiological Environmental Operating Report.

Surveillance Requirements

12.5.3.B A summary of the results obtained as part of the above required Interlaboratory Comparison Program shall be included in the Annual Radiological Environmental Operating Report.

Bases

12.5.3.C The requirement for participation in an Interlaboratory Comparison Program is provided to ensure that independent checks on the precision and accuracy of the measurements of radioactive material in environmental samples matrices are performed as part of the quality assurance program for environmental monitoring in order to demonstrate that the results are valid for the purposes of Section IV.B.2 of Appendix I to 10 CFR Part 50.

12.6 RECORDKEEPING AND REPORTING

12.6.1. Station Operating Records

1. Records and/or logs relative to the following items shall be kept in a manner convenient for review and shall be retained for at least five years.

    1. Records and periodic checks, inspection and/or calibrations performed to verify the surveillance requirements (See the applicable surveillance in the Instrumentation, Liquid Effluents, Gaseous Effluents, and Radiological Environmental Monitoring Sections) are being met. All equipment failing to meet surveillance requirements and the corrective action taken shall be recorded.

    2. Records of radioactive shipments.

2. Records and/or logs relative to the following items shall be recorded in a manner convenient for review and shall be retained for the life of the plant.

    1. Records of off-site environmental monitoring surveys.

    2. Records of radioactivity in liquid and gaseous wastes released to the environment.

    3. Records of reviews performed for changes made to the ODCM.

12.6.2. Reports

1. Radioactive Effluent Release Report

    The Radioactive Effluent Release Report covering the operation of the unit during the previous 12 months of operation shall be submitted to the Commission prior to April 1 of each year. The report shall include a summary of the quantities of radioactive liquid and gaseous effluents and solid waste released from the unit. The material provided shall be (1) consistent with the objectives outlined in the ODCM and PCP and (2) in conformance with 10 CFR Part 50.36a and Section IV.B.1 of Appendix I to 10 CFR Part 50.

2. Annual Radiological Environmental Operating Report

    The Annual Radiological Environmental Operating Report covering the operation of the unit during the previous calendar year shall be submitted prior to May 1 of each year. The report shall include summaries, interpretations, and analysis of trends of the results of the Radiological Environmental Monitoring Program for the reporting period. The material provided shall be consistent with the objectives in (1) the ODCM and (2) Sections IV.B.2., IV.B.3, and IV.C of Appendix I to 10 CFR Part 50. A detailed listing of the requirement of the report is given below:

12.6.2 Reports - (Cont'd)

(a) Results of environmental sampling summarized on a quarterly basis following the format of Regulatory Guide 4.8 Table 1 (December 1975); (individual sample results will be retained at the station);

In the event that some results are not available for inclusion with the report, the report shall be submitted noting and explaining the reasons for the missing results. Summaries, interpretations, and analysis of trends of the results are to be provided.

(b) An assessment of the monitoring results and radiation dose via the principal pathways of exposure resulting from plant emissions of radioactivity including the maximum noble gas gamma and beta air doses in the unrestricted area. The assessment of radiation doses shall be performed in accordance with the ODCM.

(c) Results of the census to determine the locations of animals producing milk for human consumption, and the pasture season feeding practices at dairies in the monitoring program.

(d) The reason for the omission if the nearest dairy to the station is not in the monitoring program.

(e) An annual summary of meteorological conditions concurrent with the releases of gaseous effluents in the form of joint frequency distributions of wind speed, wind direction, and atmospheric stability.

(f) The results of the interlaboratory comparison program described in Section 12.5.3.

(g) The results of the 40 CFR Part 190 uranium fuel cycle dose analysis for each calendar year.

(h) A summary of the monitoring program, including maps showing sampling locations and tables giving distance and direction of sampling locations from the station.

3. Non-Routine Environmental Report

(a) If a confirmed measured radionuclide concentration in an environmental sampling medium averaged over any calendar quarter sampling period exceeds the reporting level given in Table 12.5-2 and if the radioactivity is attributable to plant operation, a written report shall be submitted to the Regional Administrator of NRC Regional Office, with a copy to the Director, Office of Nuclear Reactor Regulation, within 30 days from the end of the quarter. When more than one of the radionuclides in Table 12.5-2 are detected in the medium, the reporting level shall have been exceeded if $\Sigma C_i/(RL)_i$ is equal to or greater than 1 where C is the concentration of the ith radionuclide in the medium and RL is the reporting level of radionuclide i.

12.6.2 Reports - (Cont'd)

(b) If radionuclides other than those in Table 12.5-2 are detected and are due to plant effluents, a reporting level is exceeded if the potential annual dose to an individual is equal to or greater than the design objective doses of 10 CFR Part 50, Appendix I.

(c) This report shall include an evaluation of any release conditions, environmental factors, or other aspects necessary to explain the anomalous affect.

12.6.3. Offsite Dose Calculation Manual (ODCM)

1. The ODCM shall contain the methodology and parameters used in the calculation of offsite doses due to radioactive gaseous and liquid effluents and in the calculation of gaseous and liquid effluent monitoring Alarm/Trip setpoints and in the conduct of the Radiological Environmental Monitoring Program. The ODCM shall also contain (1) the Radioactive Effluent Controls and Radiological Environmental Monitoring Programs described in Section 12.2 - 12.5 and (2) descriptions of the information that should be included in the Annual Radiological Environmental Operating and Radioactive Effluent Release Reports required by Sections 12.6.2.1 and 12.6.2.2.

   The ODCM shall be subject to review and approval by the Commission prior to initial implementation.

2. Changes to the ODCM:

   (1) Shall be documented and records of reviews performed shall be retained as required by Technical Specification 6.14.A. This documentation shall contain:

      (a) Sufficient information to support the change together with appropriate analyses or evaluations justifying the change(s); and

      (b) A determination that the change will maintain the level of radioactive effluent control required by 10 CFR Part 20.1302, 40 CFR Part 190, 10 CFR Part 50.36a, and Appendix I to 10 CFR Part 50 and not adversely impact the accuracy or reliability of effluent, dose or set point calculations.

   (2) Shall be effective after review and acceptance by Independent Technical Review and PORC/Station Manager, on the date specified by the revision package.

12.6.3 Offsite Dose Calculation Manual (ODCM)-(Cont'd)

(3) Shall be submitted to the Commission in the form of a complete, legible copy of the entire ODCM or updated pages, if the Commission retains a controlled copy. If an entire copy of the ODCM is submitted, it shall be submitted as a part of or concurrent with the Radioactive Effluent Release Report for the period of the report in which any change to the ODCM was made effective. Each change shall be identified by markings in the margin of the affected pages, clearly indicating the area of the page that was changed, and shall indicate the date (e.g., month/year) the change was implemented.

12.6.4. Major Changes to Radioactive Waste Treatment Systems (Liquid and Gaseous)

NOTE: This information may be submitted as part of the annual FSAR update.

1. Licensee initiated major changes to the radioactive waste systems may be made provided:

The change is reported in the Monthly Operating Report for the period in which the evaluation was reviewed by Independent Technical Review. The discussion of each change shall contain:

(1) A summary of the evaluation that led to the determination that the change could be made in accordance with 10 CFR Part 50.59;

(2) Sufficient detailed information to support the reason for the change;

(3) A detailed description of the equipment, components, and process involved and the interfaces with other plant systems;

(4) An evaluation of the change which shows the predicted releases of radioactive materials in liquid and gaseous effluents that differ from those previously predicted in the license application and amendments;

(5) A comparison of the predicted releases of radioactive materials in liquid and gaseous effluents to the actual releases for the period in which the changes were made;

(6) An estimate of the exposure to plant operating personnel as a result of the change; and

(7) Documentation of the fact that the change was reviewed and found acceptable by Independent Technical Review.

2. The change shall become effective upon review and acceptance by Independent Technical Review.