FOR INFORMATION ONLY

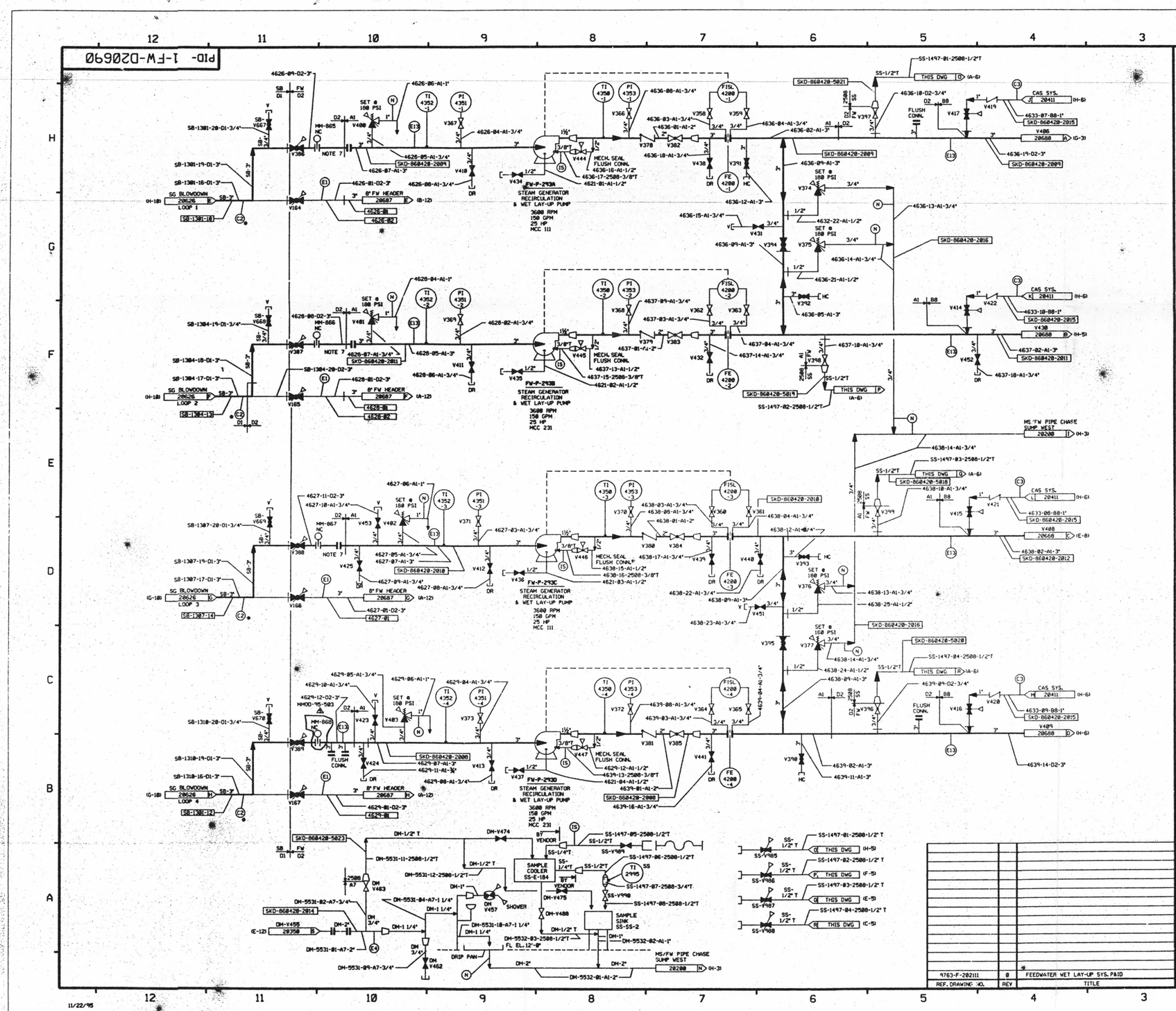

FOR P & ID REFERENCE DRAWINGS, SYMBOLS, AND ABBREVIATIONS REFER TO DRAWINGS P & ID LEGEND 1 AND P & ID LEGEND 2

LEGEND

		DESIGN PRESSURE	TEST PRESSURE	MIN. TEST TEMP °F	TEST MEDIUM
	TEST BOUNDARY				
TB	TEMPORARY TEST BOUNDARY				
C2	(SEE NOTE 8)	1185 PSIG	1481/1570 PSIG	35	WATER
C3	INTEGRITY TEST	1500 PSIG	1875/1987.5 PSIG	35	WATER
E1	INTEGRITY TEST (IS)	250 PSIG	375/389 PSIG	35	WATER
E4	INTEGRITY TEST (IS)	150 PSIG	225 /245 PSIG	35	DM WATER
E13	INTEGRITY TEST (IS)	100 PSIG	270/286.2 PSIG	35	WATER
IS	INITIAL SERVICE				
N	NO TEST REQUIRED				

NOTE: VENTS & DRAINS WITH CAPS SHALL BE TESTED TO THE LAST ISOLATION VALVE.

NOTE

1. PIPING, VALVES, EQUIPMENT & INSTRUMENT TAG NO,S ARE PREFIXED BY DESIGNATION FW, UNLESS NOTED OTHERWISE.
2. WORK THIS DRAWING WITH DRAWINGS 20684 THRU 20689.
3. PIPING, VALVES, EQUIPMENT & INSTRUMENTS ARE SAFETY CLASS NNS, UNLESS NOTED OTHERWISE.
4. SYSTEM DESCRIPTION NUMBER IS SD-1
5. CLEANLINESS CLASS "C".
6. △ INDICATES REVISION LEVEL.
7. REMOVABLE SPOOL FOR FLUSHING.
8. LINES MARKED WITH AN ASTERISK (*) INDICATES PIPING AND COMPONENTS TO BE TESTED AS PER REG GUIDE 1.143. ALL OTHER LINES MAY BE IN SERVICE TESTED OR TESTED PER THIS LEGEND.
9. DELETED

REV	DATE	DSGN	DRWN	CHKD	CDE	SES	DESCRIPTION
5	11/28/95	MPW	—	RME	WWF	RRC	INCORP MMOD 95-503 CA-0
4	2/23/95	MPW	—	BCL	DWS	JCH	INCORP MMOD 95-503 CA-0(PARTIAL)
3	7/6/94	MPW	—	DWS	BCL	JCH	INCORP DCR-860420 CA*0, 7, 12, 24, 26, 36
2	4/23/92	BCL	—	DWS	MRB	JCH	PARTIAL INCORP. DCR-86-420 CA 0
1	4/23/92	MRB	—	BCL	DWS	JEV	INCORP. MMOD-91-515, CA-0
0	10/30/87	MPW	MRB	BCL	DWS	PAG	PARTIAL INCORP. CA 88/114525C ISSUED FOR OPERATIONS

North Atlantic Energy Service Corporation

SEABROOK STATION

FEEDWATER SYSTEM WET LAY-UP

PID- 1-FW-D20690

REF. DRAWING NO.	REV	TITLE
9763-F-202111	0	FEEDWATER WET LAY-UP SYS. P&ID

11/22/95

D-37