FOR INFORMATION ONLY

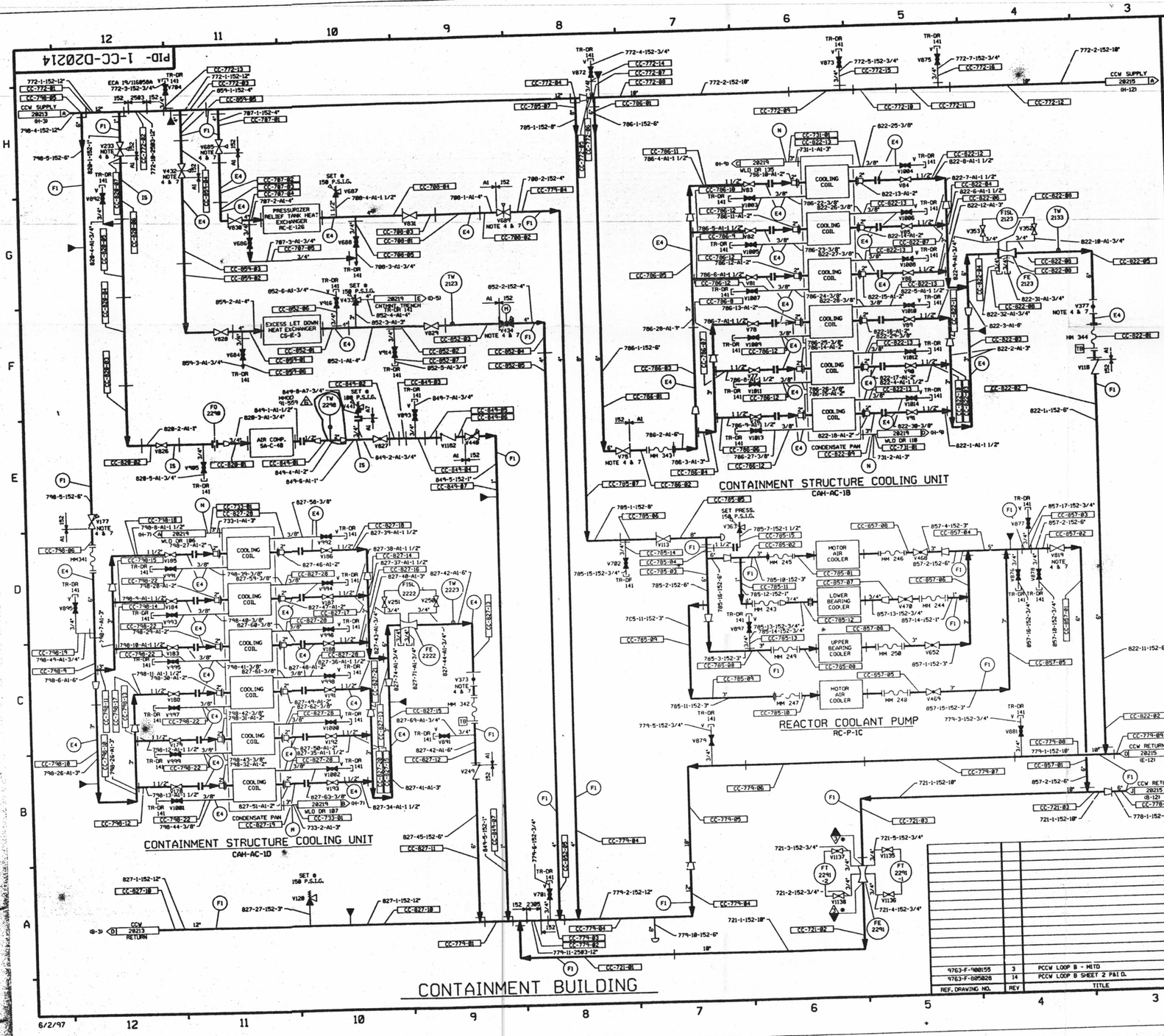

FOR P&ID REFERENCE DRAWINGS, SYMBOLS AND ABBREVIATIONS REFER TO DRAWINGS P&ID - LEGEND 1 AND P&ID - LEGEND 2

LEGEND

		DESIGN PRESSURE	TEST PRESSURE	MIN. TEST TEMP °F	TEST MEDIUM
	TEST BOUNDARY				
TB	TEMPORARY TEST BOUNDARY				
E4	INTEGRITY TEST (IS)	150 PSIG	225/245 PSIG	60	WATER
F1	INTEGRITY TEST	150 PSIG	187.5/199 PSIG	60	WATER
IS	INITIAL SERVICE		N.O.P.		
N	NO TEST REQUIRED				

NOTE: VENTS & DRAINS WITH CAPS SHALL BE TESTED UP TO THE CAP AND VALVE SHOWN OPEN.

NOTES:

1. WORK THIS DRAWING WITH DRAWINGS 20204 THRU 20215.
2. ALL LINES, EQUIPMENT, COMPONENTS, AND INSTRUMENTS HAVE SYSTEM PREFIX 1-CC UNLESS NOTED OTHERWISE.
3. ALL LINES, EQUIPMENT, COMPONENTS, AND INSTRUMENTS ARE SAFETY CLASS N UNLESS NOTED OTHERWISE.
4. EQUIPMENT ISOLATION VALVES INSIDE CONTAINMENT ARE OPERABLE FROM THE CONTAINMENT ANNULUS.
5. VENT & DRAIN CODE BREAKS ARE AT THE DOWNSTREAM END OF THE OUTER ISOLATION VALVE PER DESIGN STANDARD M-001 UNLESS OTHERWISE NOTED.
6. △ INDICATES REVISION LEVEL
7. PORTION OF SYSTEM HAS BEEN DOWNGRADED, HOWEVER PIPING SPECIFICATION HAS BEEN MAINTAINED TO SAFETY CLASS NOMENCLATURE. SOME COMPONENTS WITHIN THE NEW BOUNDARY HAVE BEEN PROCURED TO SAFETY CLASS 3 REQUIREMENTS, BUT USED IN N.N.S. SERVICE.
8. SYSTEM DESCRIPTION NUMBER IS SD-23
9. CLEANLINESS CLASS "C"

REV	DATE	DSGN	DRWN	CHKD	CDE	SES	DESCRIPTION
6	6/11/97	MPW	—	DWS	FAC	RRC	INCORP. MMOD 91-559 CA#00
5	4/14/94	BCL	—	MPW	DWS	DMO	INCORP. MMOD 93-517 CA-0
4	10/20/92	BCL	—	MRB	DWS	WFZ	INCORP. MMOD 91-559 CA#0 (PARTIAL)
3	4/13/92	MRB	—	BCL	DWS	JEV	INCORP. MMOD 91-515 CA0
2	12/17/86	MRJ	DWS	PAL	BCL	RRC	ADDED CONT FLAG COORD'S, NOTE 6 & MITD REF DWG, REVISED V441 SET PRESS, LINE NO'S & ADDED 3/4" FLG PER UE&C P&ID, REMOVED CAP PER ERECTION ISO, INCORP ECA 19/116058A
1	8/14/86	MPW	TAK	WRD	BCL	RRC	ADDED TEST BOUNDRY, AND ISO NO'S
0	6/26/86	DWS	UE&C CADD	VNK	JHS	RRC	ISSUED FOR OPERATIONS

REF. DRAWING NO.	REV	TITLE
9763-F-900155	3	PCCW LOOP B - MITD
9763-F-805028	14	PCCW LOOP B SHEET 2 P&ID.

North Atlantic Energy Service Corporation

SEABROOK STATION

PRIMARY COMPONENT COOLING LOOP B DETAIL

PID- 1-CC-D20214

6/2/97

D-11