STATE OF RHODE ISLAND AND PROVIDENCE PLANTATIONS

DEPART. ENT OF HEALTH

R. LES AND RE. . LATIONS FOR THE CONTROL OF RADIATION

. R. . . . . RAD.

. . NE . . . .

<u>AS A. ENDED</u>. .

FE. R. AR. . . . .
. . NE . . . .
OCTO. ER . . . .
FE. R. AR. . . . .
FE. R. AR. . . . .E.
. AN. AR. . . . E. .
A. . . ST . . . .
DECE. . ER . . . . E.
FE. R. AR. . . . .
. . NE . . . .
. . NE . . . .

INTROD. CTION

T. . . . . R. . . . R. . . . . C. . . . . R. . . . . .R. . . . . RAD. . . . . .
. . . . . S. . . . . L. . . . . R. . . . I. . . . . .
. . . . . CFR P. . . . . S. . . . . N. . . . . R. . . . . .
C. . . . . .NRC. . . . . A. . . . . NRC. . . . . L. . . . . .
. . . . . C. . . . . R. . . . . C. . . . . P. . . . . D. . . . . .CRCPD. . . . .
. . . . . P. . . . E. F . . . . . S. . . . . S. . . . . R. . . . . C. . . . . .
R. . . . . .SSRCR. .

F. . . . . S. . . . . L. . . . . R. . . . I. . . . . .
. . . . . .

. . . A. . . . . .
. . . O. . . . . .
. . . S. . . . . .

N. . . . . S. . . . . T. . . . . .
. . . . . F. . . . . .
. . . . . R. . . . . C. . . . . A. . . . . .

T. . . . . R. . . . . R. . . . . C. . . . . R. . . . . .
. . . . . R. . . . . C. . . . . A. . . . . R. . . . I. . . . D. . . . . H. . . . . S. . . . . S. . . . . .

FORE. ORD

A. . . . . .

T. . . . . N. . . . . O. . . . . A. . . . . R. . . . . .NAR. ..

NO . . RA. FACILIT. OR APPLICA. LE SERVICE IS A. THORI. ED TO OPERATE IN RHODE ISLAND
. ITHO. T A C. RRENT CERTIFICATE OF RE. ISTRATION ISS. ED . . THIS A. ENC. .

NO INDIVID. AL OR FACILIT. IS ALLO. ED TO . SE RADIOACTIVE . ATERIALS IN RHODE ISLAND
. ITHO. T A C. RRENT . ENERAL OR SPECIFIC LICENSE ISS. ED . . THIS A. ENC. .

N. . . . . N. . . . . .

N. . . . . T. . . . . .

R. . . . I. . . . D. . . . . H. . . .
O. . . . . O. . . . . R. . . . . H. . . .
T. . . . C. . . . . H. . . . R. . . . .
P. . . . . RI . . . . . .

T. . . . . .
. . . . . .FA.

TA. LE OF CONTENTS

P. . .

PART A . DEFINITIONS.. ENERAL PROVISIONS OF THE RE. . LATIONS.STANDARDS FOR PROTECTION A. AINST RADIATION. NOTICES. INSTR. CTIONS AND REPORTS TO . OR. ERS. INSPECTIONS.

A. . D.... .. .. . . A. .
A. . .. . P. . . .. A. . .
A. . S.. . . . . P. . . . . A. . .. . . R. . .. . A. . .
A. . P.. . . . . P. . . . . A. . .
A. . . . .. D.. . . . . A. . .
A. . R. . . . . R. . . . . A. . .. . R. . ... A. . .
A. . N.. . . . . I. . . . . R. . . . . I. . . . . A. . .
A. . C. . ... P. . . . . A. . .

APPENDICES

A. . . . . .. A . P. . . . . F. . . . . R. . . .. A. . .
A. . . . . A. . . . L.. .. . . . I. . . . . .ALI. . . . D. . .. . . A.. C. . . . .
.DAC. . . R. . .. . O. . . . . E. . . . . E.... . . .
C. . . . . C. . . . . R. .. . . . . S. . .. . . S. . . . . A. . .
A. . . . . .. C . . . . L.. . . . . R. . . .. L. . . .. . A. . . .
A. . . . . .. D . R. . .. . T. . . . . L. . . L. . . R. . .. .
D.. . . . . L. . . D.. . . . . F. . ... A. . . .
A. . . . . .. E . C. . .. . C. . . . . L. . . L. . . R. . .. . A. . . .
A. . . . . .. F . . . . D. . . . . A. . . .
A. . . . . R. . .. . R. . . . . .. R. . .. . C. . . . .
E. . . . . R. . .. . L. . . .. P. . . . . O. . . . . S. .. . . . . A. . . .

PART Y . REGISTRATION OF . . RA. E. . IP. ENT FACILITIES AND RADIATION SERVICES

. . . P.. . . . . S. . . . . .
. . . E. . . ..
. . . A.... . . .. R. . .. . E. . .. . F. . ...
. . . A. ... . R. . .. . E. . .. . S. . . .. R. . .. .
P. . . .. . S. . . .. . .
. . . C.. .. .. R. . .. .
. . . R. . . . . C. . . . .
. . . A.. . . . N. . I. . .. . .
. . . A.. . . .. T. . . . . O. ... .
. . . . . R. . .. . T. . . . . .
. . . . R.. . . . . F. . .

APPENDICES

A. . . . . .. A . I.. . . . . R. . .. . S. .. .. R. . . .. P.. . R. . .. . .
A. . . . . E. . . . . E. . . . . R. . . .. R. . .. . P. . . .. . S. . . .. . .
A. . . . . .. C . R. .. . . C. . . . . F. . ... S. . . .. . .

PART Y. LICENSIN. OF RADIOACTIVE. ATERIAL AND. SE OF RADION. CLIDES IN THE HEALIN. ARTS.

C. . . . . P. . . . . C. .
C. . E. . . . . C. .
C. . L. . . . . C. .
C. . . . . L. . . . . .
S. . . . . C. .
C. . . . . D. . . . . E. . . . . C. .
C. . . . . C. . . . . D. . . . . C. .
L. . . . . S. . . . . D. . . . . A. . . . . C. . .
O. . . . . R. . . . . C. . .
C. . . . . R. . . . . S. . . . . C. . .
. . . . . D. . . . . C. . .
I. . V. . . T. . . . . C. . .
I. . D. . . . . D. . . . . C. . .
C. . S. . . . . L. . . . . .
. . . . . R. . . . . C. . .
S. . . . . R. . . . . C. . .
S. . . . . L. . . . . S. . . . C. . .
S. . . . . R. . . . . S. . . . . L. . . . . A. . . . . .
R. . . . . D. . . . . C. . . . . P. . . . . D. . . . . .
C. . . . . R. . . . . C. . .
I. . . . . S. . . . . L. . . . . C. . .
E. . . . . T. . . . . L. . . . . D. . . . . S. . .
. . . S. . . . . O. . . . . A. . . . C. . .
R. . . . . A. . . . . L. . . . . C. . .
T. . . . . C. . .
. . . . . R. . . . . T. . . . . L. . . . . C. . .
F. . . . . A. . . . . R. . . . . D. . . . . C. . .
C. . . . . N. . . . . E. . . . . P. . . . . R. . . . . .
R. . . . . R. . . . . C. . .
C. . R. . . . . C. . .
C. . T. . . . . C. . .
C. . . . . R. . . . . H. . . . . A. . . C. . .
T. . . . . R. . . . . C. . . . . R. . . . . C. . .

APPENDICES

A. . . . . A . E. . . C. . . . . C. . .
A. . . . . E. . . . . C. . .
A. . . . . C . . . RESERVED. C. . .
A. . . . . D . L. . . . F. . . . . L. . . . . C. . . . . C. . .
A. . . . . E . C. . . . . R. . . . . F. . . . . T. . . . . P. . . . . C. . . . . .
. . . . . P. . . . . R. . . . . A. . . . . F. . . . . .
D. . . . . C. . .
A. . . . . F . . . . . R. . . . . C. . . . . .
N. . . . . E. . . . . P. . . . . R. . . . . R. . . . . C. . . .

PART Y . RADIATION SAFETY REQUIREMENTS FOR PARTICLE ACCELERATORS

D. . P... . . . . S. . . . D. .
D. . R... . . . . P. . . . . D. .
D. . R. . . .. . S. . . . . R. . . .. P. . . .. .. A. . . .. D. .
D. . . RESERVED. D. .

PART Y. RADIATION SAFETY REQUIREMENTS FOR INDUSTRIAL RADIOGRAPHIC OPERATIONS AND
SERVICE OPERATIONS AND ANALYTICAL . . RADIOGRAPHY

E. . P... . . E. .
E. . I.. . . .. . R. . .. . E. .
E. . A... . .. . R. . . . . A. . D. . . .. E. . .. . . . E. . .
E. . . . .. . S. . . .. . O. . . . . S. . . . . T. . . . . S. . . .. . E. . .

APPENDICES

A. . . . . A . R. .... C. . . .. E. . .
A. . . . . S. .. . . . . I. . .. . T. . .. .. . C. . . . . L. . . .. .
S. . . . . E. . .
A. . . . . C . S. . .. P.. . . . . S. . .. . S. . . . . A. . . . . D. . . . . .. E. . .

PART Y. . . RADIOLOGY IN THE HEALING ARTS

F. . S. . F. .
F. . . . . R. . . .. A.. H. . ... . A. . . F. . ... F. .
F. . . . . R. . . .. A.. D.. . . . . S. . . . . . F. .
F. . F.. . . . . S. . . . . . F. .
F. . .. . . S. . . . . O. . . . . F.. . . . . D. . . . . I. . . . . V. . . . .
S. . . . . F. . .
F. . I. . . . . D. . . . . S. . . . . . F. . .
F. . . RESERVED. F. . .
F. . . RESERVED. F. . .
F. . V.. . .. . R. . .. . I. . . . . F. . .
F. . . C.. . . . . T. . . . . S. . . . . . F. . .
F. . . . . F. . .

APPENDICES

A. . . . . A . I.. . . . . S. . . .. P. . . . . P. . . . . C. . . . . .
H. . ... . A. . . S. . . . . F. . .
A. . . . . I. . . . . E. . .. . H. . ... . A. . . F. . .
A. . . . . C . . .. A. . . . . T. . . .. . P. . . . . F. . . . . F. . .

P. . .

PART Y . RADIATION SAFETY REQUIREMENTS FOR MICROWAVE OVENS

. . . P... . . . . S. . . . . . .
. . . P. . . . . S. . . . . .
. . . P... D. . . .. . L.. .. . . . .
. . . N.. . C. . ...

PART Y . THERAPEUTIC RADIATION MACHINES

H. . S. . . . . A. . ... H. .
H. . D.. .. .. . . H. .
H. . . .. . . A. . .. . R. . . .. F. . ... T. . . . . ..
R. . .. . H. .
H. . . .. . . T. . . . . R. . . .. F. . ... T. . . . . ..
R. . .. . H. .
H. . . . . P. . . . . H. . .
H. . T. . . . . .. R. . .. . L. . . T. . . . . .V H. . .
H. . T. . . . . .. R. . .. . P. . . . T. . . . . S. V
. . . A. . . . . E.. . . . . T. . . . . S. . . . . .V . . . A. . . . . H. . .
H. . C.... . .. . . . S. . . . . I. . . . . H. . .
H. . S. .. .. S. . . . . D. . .. . R. . . .. H. . .

APPENDICES

A. . . . . .. A . I. . . . . R. . .. . S. .. .. R. . . .. P.. . R. . .. . . H. . .

FORMS ANNEX

Notice to Employees (Form RCA-1) 1
Cumulative Occupational Exposure History (Form RCA-2) 2
Instructions and Additional Information Pertinent to the Completion of Form RCA-2 3
Occupational Exposure Record for a Monitoring Period (Form RCA-3)4
Instructions and Additional Information Pertinent to the Completion of Form RCA-3 5

RULES AND REGULATIONS FOR THE CONTROL OF RADIATION

(R23-1.3-RAD)

PART A

DEFINITIONS; GENERAL PROVISIONS OF THE REGULATIONS; STANDARDS FOR PROTECTION AGAINST RADIATION; NOTICES, INSTRUCTIONS AND REPORTS TO WORKERS; INSPECTIONS

FEBRUARY 1979

As Amended:

June 1981
October 1984
February 1990
August 1991
December 1993 (E)
February 1994
June 1995
June 1999

PART A
DEFINITIONS, GENERAL PROVISIONS OF THE REGULATIONS; STANDARDS FOR PROTECTION AGAINST RADIATION; NOTICES, INSTRUCTIONS AND REPORTS TO WORKERS; INSPECTIONS

A.0 DEFINITIONS

Whenever used in these rules and regulations, the following terms shall be construed as follows:

Absorbed dose means the energy imparted by ionizing radiation per unit mass of irradiated material. The units of absorbed dose are the gray (Gy) and the rad.

Accelerator means any machine capable of accelerating electrons, protons, deuterons, or other charged particles in a vacuum and of discharging the resultant particulate or other radiation into a medium at energies usually in excess of 1 MeV. For purposes of this definition, "particle accelerator" is an equivalent term.

Accelerator produced material means any material made radioactive by exposing it in a particle accelerator.

Accessible surface means the external surface of the enclosure or housing provided by the manufacturer.

Act means Title 23, Chapter 1.3 of the General Laws of the State of Rhode Island entitled "Radiation Control".

Activity means the rate of disintegration or transformation or decay of radioactive material. The units of activity are the becquerel (Bq) and the curie (Ci).

Added filtration means any filtration which is in addition to the inherent filtration.

Adult means an individual 18 or more years of age.

Agency means Rhode Island Radiation Control Agency, Office of Occupational Health, Rhode Island Department of Health.

Agreement State means any State with which the United States Nuclear Regulatory Commission has entered into an effective agreement under section 274 b. of the Atomic Energy Act of 1954, as amended (73 Stat. 689).

Airborne radioactive material means any radioactive material dispersed in the air in the form of dusts, fumes, particulates, mists, vapors, or gases.

Airborne radioactivity area means a room, enclosure, or area in which airborne radioactive materials exist in concentrations:

(1) In excess of the derived air concentrations (DACs) specified in Table I of Appendix B to Part A; or

(2) To such a degree that an individual present in the area without respiratory protective equipment could exceed, during the hours an individual is present in a week, an intake of 0.6 percent of the annual limit on intake (ALI) or 12 DAC-hours.

Aluminum equivalent means the thickness of type 1100 aluminum alloy[1] affording the same attenuation, under specified conditions, as the material in question.

Analytical X-ray equipment means equipment used for X-ray diffraction or fluorescence analysis.

---

[1] [illegible]

Analytical X-ray system means a group of local and remote components utilizing X-rays to determine the elemental composition or to examine the microstructure of materials. Local components include those that are struck by X-rays such as radiation source housings, port and shutter assemblies, collimators, sample holders, cameras, goniometers, detectors and shielding. Remote components include power supplies, transformers, amplifiers, readout devices, and control panels.

A.0

Annual limit on intake (ALI) means the derived limit for the amount of radioactive material taken into the body of an adult worker by inhalation or ingestion in a year. ALI is the smaller value of intake of a given radionuclide in a year by the reference man that would result in a committed effective dose equivalent of 0.05 Sv (5 rem) or a committed dose equivalent of 0.5 Sv (50 rem) to any individual organ or tissue. ALI values for intake by ingestion and by inhalation of selected radionuclides are given in Table I, Columns 1 and 2, of Appendix B.

Annual refresher safety training means a review conducted or provided by the licensee or registrant for its employees on radiation safety aspects of industrial radiography. The review may include, as appropriate, the results of internal inspections, new procedures or equipment, new or revised regulations, accidents or errors that have been observed, and should also provide opportunities for employees to ask safety questions.

ANSI means the American National Standards Institute.

Area of use means a portion of a physical structure that has been designated for the purpose of receiving, using, or storing radioactive material.

As low as is reasonably achievable (ALARA) means making every reasonable effort to maintain exposures to radiation as far below the dose limits in these regulations as is practical, consistent with the purpose for which the licensed or registered activity is undertaken, taking into account the state of technology, the economics of improvements in relation to state of technology, the economics of improvements in relation to benefits to the public health and safety, and other societal and socioeconomic considerations, and in relation to utilization of nuclear energy and licensed or registered sources of radiation in the public interest.

Assembler means any person engaged in the business of assembling, replacing, or installing one or more components into an X-ray system or subsystem. The term includes the owner of an X-ray system or his or her employee or agent who assembles components into an X-ray system that is subsequently used to provide professional or commercial services.

Associated equipment means equipment that is used in conjunction with a radiographic exposure device to make radiographic exposures that drives, guides, or comes in contact with the source, (e.g., guide tube, control tube, control (drive) cable, removable source stop, “J” tube and collimator when it is used as an exposure head.

Attenuation block means a block or stack, having dimensions 20 centimeters by 20 centimeters by 3.8 centimeters, of type 1100 aluminum alloy[1] or other materials having equivalent attenuation.

Authorized nuclear pharmacist means a pharmacist who is identified as an authorized nuclear pharmacist on an Agency, U.S. Nuclear Regulatory Commission, Agreement State or Licensing State license, and who is:

(1) Board certified as a nuclear pharmacist by the Board of Pharmaceutical Specialties; or

(2) Identified as an authorized nuclear pharmacist on an Agency, U.S. Nuclear Regulatory Commission, Agreement State or Licensing State license that authorizes the use of radioactive material in the practice of nuclear pharmacy; or

(3) Identified as an authorized nuclear pharmacist on a permit issued by an Agency, U.S. Nuclear Regulatory Commission, Agreement State or Licensing State specific license of broad scope that is authorized to permit the use of radioactive material in the practice of nuclear pharmacy.

Authorized user means an individual who is:

(1) identified as an authorized user on an Agency, Agreement State, Licensing State or U.S. Nuclear Regulatory Commission license. The authorized user for medical use of radioactive material means a physician, dentist or podiatrist who is:

(i) Board certified by at least one of the boards listed in Paragraph (a) of Sections C.8.64, C.8.65, C.8.66, C.8.67, C.8.69, C.8.70 or C.8.76 of these regulations;

(ii) Identified as an authorized user on an Agency, U.S. Nuclear Regulatory Commission, Agreement State or Licensing State license that authorizes the medical use of radioactive material; or

(iii) Identified as an authorized user on a permit issued by an Agency, U.S. Nuclear Regulatory Commission, Agreement State or Licensing State specific license of broad scope that is authorized to permit the medical use of radioactive material.

or

(2) qualified as an authorized user under an Agency registration by satisfying the training requirements of Paragraph H.3.3 of these regulations.

Automatic **EXPOSURE** control means a device which automatically controls one or more technique factors in order to obtain at a preselected location(s) a required quantity of radiation (See also Phototimer).

Background radiation means radiation from cosmic sources, naturally occurring radioactive materials, including radon, except as a decay product of source or special nuclear material, and including global fallout as it exists in the environment from the testing of nuclear explosive devices. "Background radiation" does not include sources of radiation from radioactive materials regulated by the Agency.

Barrier (See Protective barrier).

Beam axis means a line from the source through the centers of X-ray fields.

Beam-limiting device means a device which provides a means to restrict the dimensions of an X-ray field.

Becquerel (Bq) means the SI unit of activity. One becquerel is equal to 1 disintegration or transformation per second (dps or tps).

Bioassay means the determination of kinds, quantities or concentrations, and, in some cases, the locations of radioactive material in the human body, whether by direct measurement, in vivo counting, or by analysis and evaluation of materials excreted or removed from the human body. For the purposes of these regulations, "radiobioassay" is an equivalent term.

Brachytherapy means a method of radiation therapy in which sealed sources are utilized to deliver radiation dose at a distance of up to a few centimeters, by surface, intracavitary, or interstitial application.

Byproduct material means:

(1) Any radioactive material (except special nuclear material) yielded in or made radioactive by exposure to the radiation incident to the process of producing or utilizing special nuclear material; and

(2) The tailings or wastes produced by the extraction or concentration of uranium or thorium from ore processed primarily for its source material content, including discrete surface wastes resulting from uranium or thorium solution extraction processes. Underground ore bodies depleted by these solution extraction operations do not constitute "byproduct material" within this definition.

Cabinet radiography means industrial radiography conducted in an enclosure or cabinet so shielded that every location on the exterior meets the dose limits for individual members of the public as specified in Section A.2.11.

Cabinet X-ray system means an X-ray system with the X-ray tube installed in an enclosure (hereinafter termed "cabinet") that is independent of existing architectural structures except the floor. The cabinet X-ray system is intended to contain at least that portion of a material being irradiated, provide radiation attenuation, and exclude personnel from its interior during generation of radiation. Included are all X-ray systems designed primarily for the inspection of carry-on baggage at airline, railroad, and bus terminals, and in similar facilities. An X-ray tube used within a shielded part of a building, or X-ray equipment which may temporarily or occasionally incorporate portable shielding is not considered a cabinet X-ray system.

[REMAINDER OF PAGE INTENTIONALLY LEFT BLANK]

Calendar quarter means not less than 12 consecutive weeks nor more than 14 consecutive weeks. The first calendar quarter of each year shall begin in January and subsequent calendar quarters shall be so arranged such that no day is included in more than one calendar quarter and no day in any one year is omitted from inclusion within a calendar quarter. No licensee or registrant shall change the method observed by him of determining calendar quarters for purposes except at the beginning of a calendar year.

Calibration means the determination of (1) the response or reading of an instrument relative to a series of known radiation values over the range of the instrument, or (2) the strength of a source of radiation relative to a standard.

Camera see “Radiographic exposure device”.

C-arm means a fluoroscopic X-ray system in which the image receptor and the X-ray tube housing assembly are connected by a common mechanical support system in order to maintain a desired spatial relationship.

Certifiable cabinet X-ray system means an existing uncertified x-ray system that has been modified to meet the certification requirements specified in 21 CFR 1020.40.

Certified cabinet X-ray system means an X-ray system which has been certified in accordance with 21 CFR 1010.2 as being manufactured and assembled pursuant to the provisions of 21 CFR 1020.40.

Certified components means components of X-ray systems which are subject to the X-Ray Equipment Performance Standard promulgated under Public Law 90-602, the Radiation Control for Health and Safety Act of 1968.

Certified system means any X-ray system which has one or more certified component(s).

Certifying Entity means an independent certifying organization meeting the requirements in Appendix A to Part E or an Agreement State meeting the requirements in Parts II and III of Appendix A to Part E.

Class means a classification scheme for inhaled material according to its rate of clearance from the pulmonary region of the lung. Materials are classified as D, W, or Y, which applies to a range of clearance half-times: for Class D, Days, of less than 10 days, for Class W, Weeks, from 10 to 100 days , and for Class Y, Years, of greater than 100 days. For the purposes of these regulations, lung class and inhalation class are equivalent terms.

Coefficient of variation or "C" means the ratio of the standard deviation to the mean value of a population of observations. It is estimated using the following equation:

$$C = S/X = 1/X \left[\sum_{i=1}^{n} (X_i - X)2/(n-1) \right]^{1/2}$$

where
s = Estimated standard deviation of the population.
X = Mean value of observations in sample.
X_i = ith observation in sample.
n = Number of observations in sample.

Collective dose means the sum of the individual doses received in a given period of time by a specified population from exposure to a specified source of radiation.

Collimator means a radiation shield that is placed on the end of the guide tube or directly onto a radiographic exposure device to restrict the size of the radiation beam when the sealed source is cranked into position to make a radiographic exposure.

Committed dose equivalent ($H_{T,50}$) means the dose equivalent to organs or tissues of reference (T) that will be received from an intake of radioactive material by an individual during the 50-year period following the intake.

Committed effective dose equivalent ($H_{E,\ 50}$) means the sum of the products of the weighting factors

applicable to each of the body organs or tissues that are irradiated and the committed dose equivalent to each of these organs or tissues ($H_{E,50} = \Sigma\ w_{T,}H_{T,50}$).

Computed tomography dose index (CTDI) means the integral from -7T to +7T of the dose profile along a line perpendicular to the tomographic plane divided by the product of the nominal tomographic section thickness and the number of tomograms produced in a single scan, that is:

$$CTDI = \frac{1}{nT} \int_{-7T}^{+7T} D(z)\, dz$$

where:
z = Position along a line perpendicular to the tomographic plane.
D(z) = Dose at position z.
T = Nominal tomographic section thickness.
n = Number of tomograms produced in a single scan.

This definition assumes that the dose profile is centered around z=0 and that, for a multiple tomogram system, the scan increment between adjacent scans is nT.

Contrast scale means the change in the linear attenuation coefficient per CTN relative to water, that is:

$$CS = \frac{u_x - u_w}{(CTN)_x - (CTN)_w}$$

where:
$(CTN)_x$ = CTN of the material of interest.
$(CTN)_w$ = CTN of water.
u_x = Linear attenuation coefficient of the material of interest.
u_w = Linear attenuation coefficient of water.

Control cable means the cable that is connected to the source assembly and used to drive the source to and from the exposure location.

Control drive mechanism means a device that enables the source assembly to be moved into and out of the exposure device.

Control panel means that part of the X-ray control upon which are mounted the switches, knobs, pushbuttons, and other hardware necessary for manually setting the technique factors.

Control tube means a protective sheath for guiding the control cable. The control tube connects the control drive mechanism to the radiographic exposure device.

Cooling curve means the graphical relationship between heat units stored and cooling time.

CS (See Contrast scale).

CT conditions of operation means all selectable parameters governing the operation of a CT system including, but not limited to, nominal tomographic section thickness, filtration, and the technique factors as defined in these regulations.

CTDI (See Computed tomography dose index).

CT gantry means the tube housing assemblies, beam-limiting devices, detectors, and the supporting structures and frames which hold these components.

CTN (See "CT number").

CT number means the number used to represent the X-ray attenuation associated with each elemental area of the CT image:

$$CTN = \frac{k(u_x - u_w)}{u_w}$$

where:
k = A constant[2]
u_x = Linear attenuation coefficient of the material of interest.
u_w = Linear attenuation coefficient of water.

Curie means a unit of quantity of radioactivity. One curie (Ci) is that quantity of radioactive material which decays at the rate of 3.7×10^{10} transformations per second (tps).

Dead-man switch means a switch so constructed that a circuit closing contact can be maintained only by continuous pressure on the switch by the operator.

Declared pregnant woman means a woman who has voluntarily informed the licensee or registrant, in writing, of her pregnancy and the estimated date of conception. The declaration remains in effect until the declared pregnant woman withdraws the declaration in writing or is no longer pregnant.

Deep dose equivalent (H_d), which applies to external whole body exposure, means the dose equivalent at a tissue depth of 1 centimeter (1000 mg/cm^2).

Dedicated check source means a radioactive source that is used to assure the constant operation of a radiation detection or measurement device over several months or years.

Dental use of radioactive material means the intentional external administration of the radiation from radioactive material to human beings in the practice of dentistry in accordance with a license issued by a State or Territory of the United States, the District of Columbia, or the Commonwealth of Puerto Rico.

Dentist means an individual licensed by a State or Territory of the United States, the District of Columbia, or the Commonwealth of Puerto Rico to practice dentistry.

Derived air concentration (DAC) means the concentration of a given radionuclide in air which, if breathed by the reference man for a working year of 2,000 hours under conditions of light work, results in an intake of one ALI. For purposes, the condition of light work is an inhalation rate of 1.2 cubic meters of air per hour for 2,000 hours in a year. DAC values are given in Table I, Column 3, of Appendix B.

Derived air concentration-hour (DAC-hour) means the product of the concentration of radioactive material in air, expressed as a fraction or multiple of the derived air concentration for each radionuclide, and the time of exposure to that radionuclide, in hours. A licensee or registrant may take 2,000 DAC-hours to represent one ALI, equivalent to a committed effective dose equivalent of 0.05 Sv (5 rem).

Diagnostic source assembly means the tube housing assembly with a beam-limiting device attached.

Diagnostic X-ray system means an X-ray system designed for irradiation of any part of the human or animal body for the purpose of diagnosis or visualization.

Direct scattered radiation means that scattered radiation which has been deviated in direction only by materials irradiated by the useful beam (See Scattered radiation).

Dose is a generic term that means absorbed dose, dose equivalent, effective dose equivalent, committed dose equivalent, committed effective dose equivalent, total organ dose equivalent, or

---

[2] T. . . . . H. . . . . CTN . . . . . .

total effective dose equivalent. For purposes, "radiation dose" is an equivalent term.

Dose equivalent (H_T) means the product of the absorbed dose in tissue, quality factor, and all other necessary modifying factors at the location of interest. The units of dose equivalent are the sievert (Sv) and rem.

Dose limits means the permissible upper bounds of radiation doses established in accordance with these regulations. For purposes, "limits" is an equivalent term.

Dose monitor unit means a unit from which the absorbed dose can be calculated.

Dose monitoring system means a system of devices for the detection, measurement, and display of quantities of radiation.

Dose profile means the dose as a function of position along a line.

Dosimetry processor means an individual or an organization that processes and evaluates individual monitoring devices in order to determine the radiation dose delivered to the monitoring devices.

Drive cable [See “Control cable”].

Effective dose equivalent (H_E) means the sum of the products of the dose equivalent to each organ or tissue (H_T) and the weighting factor (w_T) applicable to each of the body organs or tissues that are irradiated ($H_E = \Sigma\, w_T H_T$).

Elemental area means the smallest area within a tomogram for which the X-ray attenuation properties of a body are depicted. (See also Picture element).

Embryo/fetus means the developing human organism from conception until the time of birth.

Enclosed radiography means industrial radiography conducted in an enclosed cabinet or room and includes cabinet radiography and shielded room radiography.

Entrance **EXPOSURE** rate means the **EXPOSURE** per unit time at the point where the center of the useful beam enters the patient.Equipment (See X-ray equipment).

Entrance or access point means any opening through which an individual or extremity of an individual could gain access to radiation areas or to licensed or registered radioactive materials. This includes entry or exit portals of sufficient size to permit human entry, irrespective of their intended use.

EXPOSURE[3] means:

(1)The quotient of dQ by dm where dQ is the absolute value of the total charge of the ions of one sign produced in air when all the electrons (negatrons and positrons) liberated by photons in a volume element of air having mass dm are completely stopped in air. The SI unit of **EXPOSURE** is the coulomb per kilogram (C/kg) [See A.1.9 Units of Exposure and Dose for the special unit (roentgen)]; or

(2)Being exposed to ionizing radiation or to radioactive material.

EXPOSURE rate means the **EXPOSURE** per unit of time, such as R/min, mR/h, etc.

Exposure head means a device that locates the gamma radiography sealed source in the selected working position. (An exposure head is also known as a source stop.)

External dose means that portion of the dose equivalent received from any source of radiation outside the body.

Extremity means hand, elbow, arm below the elbow, foot, knee, and leg below the knee.

Fail-safe characteristics means a design feature which causes beam port shutters to close, or otherwise prevents emergence of the primary beam, upon the failure of a safety or warning device.

[illegible]

AYYY

Field emission equipment means equipment which uses an X-ray tube in which electron emission from the cathode is due solely to the action of an electric field.

Field size means the dimensions along the major axes of an area in a plane perpendicular to the specified direction of the beam of incident radiation at the normal treatment distance and defined by the intersection of the major axes and the 50 percent isodose line. Material shall be placed in the beam such that dose maximum is produced at the normal treatment distance when field size is being determined.

Field station means a facility where sources of radiation may be stored or used and from which equipment is dispatched.

Filter means material placed in the useful beam to absorb preferentially selected radiations.

Fluoroscopic imaging assembly means a component which comprises a reception system in which X-ray photons produce a fluoroscopic image. It includes equipment housings, electrical interlocks if any, the primary protective barrier, and structural material providing linkage between the image receptor and the diagnostic source assembly.

Focal spot means the area projected on the anode of the X-ray tube by the electrons accelerated from the cathode and from which the useful beam originates.

Gantry means that part of the system supporting and allowing possible movements of the radiation head.

Generally applicable environmental radiation standards means standards issued by the U.S. Environmental Protection Agency (EPA) under the authority of the Atomic Energy Act of 1954, as amended, that impose limits on radiation exposures or levels, or concentrations or quantities of radioactive material, in the general environment outside the boundaries of locations under the control of persons possessing or using radioactive material.

General purpose radiographic X-ray system means any radiographic X-ray system which, by design, is not limited to radiographic examination of specific anatomical regions.

Gonadal shield means a protective barrier for the testes or ovaries.

Gray (Gy) means the SI unit of absorbed dose. One gray is equal to an absorbed dose of 1 joule per kilogram (100 rad).

Guide tube means a flexible or rigid tube (i.e., “J” tube) for guiding the source assembly and the attached control cable from the exposure device to the exposure head. The guide tube may also include the connections necessary for attachment to the exposure device and to the exposure head.

Half-value layer means the thickness of specified material which attenuates the beam of radiation to an extent such that the exposure rate is reduced to one-half of its original value. In this definition, the contribution of all scattered radiation, other than any which might be present initially in the beam concerned, is deemed to be excluded.

Hands-on experience means experience in all of those areas considered to be directly involved in the radiography process.

Healing Arts as used in these regulations, means any discipline which involves the diagnosis or treatment of individuals by a practitioner who is licensed for that purpose by the State of Rhode Island, and which discipline, prior to the effective date, included the intentional exposure of individuals to sources of radiation for diagnosis or treatment.

Healing arts screening means the testing of human beings using X-ray machines for the detection or evaluation of health indications when such tests are not specifically and individually ordered by a licensed practitioner of the healing arts legally authorized to prescribe such X-ray tests for the purpose of diagnosis or treatment.

Heat unit means a unit of energy equal to the product of the peak kilovoltage, milliamperes, and

seconds, i.e., kVp x mA x second.

High radiation area means an area, accessible to individuals, in which radiation levels from radiation sources external to the body could result in an individual receiving a dose equivalent in excess of 1 mSv (0.1 rem) in 1 hour at 30 centimeters from the radiation source or 30 centimeters from any surface that the radiation penetrates.

Human use means the internal or external administration of radiation or radioactive material to human beings.

HVL (See Half-value layer).

Image intensifier means a device, installed in its housing, which instantaneously converts an X-ray pattern into a corresponding light image of higher energy density.

Image receptor means any device, such as a fluorescent screen or radiographic film, which transforms incident X-ray photons either into a visible image or into another form which can be made into a visible image by further transformations.

Image receptor support means, for mammography systems, the part of the system designed to support the image receptor during a mammography examination.

Independent certifying organization means an independent organization that meets all of the criteria of Appendix A to Part E.

Individual means any human being.

Individual monitoring means the assessment of:

(1) Dose equivalent (a) by the use of individual monitoring devices or (b) by the use of survey data; or

(2) Committed effective dose equivalent (a) by bioassay or (b) by determination of the time-weighted air concentrations to which an individual has been exposed, that is, DAC-hours. [See DAC-hours].

Individual monitoring devices (individual monitoring equipment) means devices designed to be worn by a single individual for the assessment of dose equivalent such as film badges, thermoluminescent dosimeters (TLDs), pocket ionization chambers, and personal ("lapel") air sampling devices.

Industrial radiography (radiography) means an examination of the structure of materials by nondestructive methods, utilizing ionizing radiation to make radiographic images.

Inhalation class [see Class].

Inherent filtration means the filtration of the useful beam provided by the permanently installed components of the tube housing assembly.

Injection tool means a device used for controlled subsurface injection of radioactive tracer material.

Inspection means an official examination or observation including but not limited to, tests, surveys, and monitoring to determine compliance with rules, regulations, orders, requirements and conditions of the Agency.

Interlock means a device arranged or connected such that the occurrence of an event or condition is required before a second event or condition can occur or continue to occur.

Internal dose means that portion of the dose equivalent received from radioactive material taken into the body.

Interruption of irradiation means the stopping of irradiation with the possibility of continuing irradiation without resetting of operating conditions at the control panel.

Kilovolts peak (See Peak tube potential).

kVp (See Peak tube potential).

kWs means kilowatt second which is equal to the product of peak kilovolts, amperes, and seconds, e.g., 10^3 kV mA sec.

Lay-barge radiography means industrial radiography performed on any water vessel used for laying pipe.

Lead equivalent means the thickness of lead affording the same attenuation, under specified conditions, as the material in question.

Leakage radiation means radiation emanating from the diagnostic source assembly except for:

(1) the useful beam, and

(2) radiation produced when the exposure switch or timer is not activated.

Leakage technique factors means the technique factors associated with the diagnostic source assembly which are used in measuring leakage radiation. They are defined as follows:

(1) For diagnostic source assemblies intended for capacitor energy storage equipment, the maximum-rated peak tube potential and the maximum-rated number of exposures in an hour for operation at the maximum rated peak tube potential with the quantity of charge per exposure being 10 millicoulombs, i.e., 10 milliampere seconds, or the minimum obtainable from the unit, whichever is larger.

(2) For diagnostic source assemblies intended for field emission equipment rated for pulsed operation, the maximum-rated peak potential and the maximum-rated number of X-ray pulses in an hour for operation at the maximum-rated peak tube potential.

(3) For all other diagnostic source assemblies, the maximum-rated peak tube potential and the maximum-rated continuous tube current for the maximum-rated peak tube potential.

Lens dose equivalent (LDE) applies to the external exposure of the lens of the eye and is taken as the dose equivalent at a tissue depth of 0.3 centimeter (300 mg/cm^2).

License means a license issued by the Agency in accordance with the regulations adopted by the Agency.

Licensed material" means radioactive material received, possessed, used, transferred or disposed of under a general or specific license issued by the Agency.

Licensee means any person who is licensed by the Agency in accordance with these regulations and the Act.

Licensing State means any State with regulations equivalent to the Suggested State Regulations for Control of Radiation relating to, and an effective program for, the regulatory control of NARM and which has been granted final designation by the Conference of Radiation Control Program Directors, Inc.

Light field means that area of the intersection of the light beam from the beam-limiting device and one of the set of planes parallel to and including the plane of the image receptor, whose perimeter is the locus of points at which the illumination is one-fourth of the maximum in the intersection.

Limits [See "Dose limits"].

Line-voltage regulation means the difference between the no-load and the load line potentials expressed as a percent of the load line potential. It is calculated using the following equation:

Percent line-voltage regulation = $100\ (V_n - V_1)/V_1$

where:

V_n = No-load line potential and

V_1 = Load line potential

Logging supervisor means the individual who provides personal supervision of the utilization of sources of radiation at the well site.

Logging tool means a device used subsurface to perform well-logging.

Lost or missing licensed or registered source of radiation means licensed or registered source of radiation whose location is unknown. This definition includes licensed material that has been shipped but has not reached its planned destination and whose location cannot be readily traced in the transportation system.

Lung class [see Class].

Major Processor means a user processing, handling or manufacturing radioactive material exceeding Type A quantities as unsealed sources or material, or exceeding four (4) times Type B quantities as sealed sources, but does not include nuclear medicine programs, universities, industrial radiographers or small industrial programs. Type A and B quantities are defined in Section 71.4 of 10 CFR Part 71.

Management means the chief executive officer or that individual's designee.

Maximum line current means the root-mean-square current in the supply line of an X-ray machine operating at its maximum rating.

Medical institution means an organization in which several medical disciplines are practiced.

Medical use means the intentional internal or external administration of radioactive material, or the radiation therefrom, to patients or human research subjects under the supervision of an authorized user (as defined in these regulations).

Member of the public means any individual except when that individual is receiving an occupational dose.

Mineral logging means any logging performed for the purpose of mineral exploration other than oil or gas.

Minor means an individual less than 18 years of age.

Mobile equipment (See X-ray equipment).

Mobile nuclear medicine service means the periodic transportation of nuclear imaging/ uptake equipment and/or radioactive material for the purpose of providing nuclear medicine services at client facilities.

Monitoring means the measurement of radiation, radioactive material concentrations, surface area activities or quantities of radioactive material and the use of the results of these measurements to evaluate potential exposures and doses. For purposes, "radiation monitoring" and "radiation protection monitoring" are equivalent terms.

Multiple tomogram system means a system which obtains X-ray transmission data simultaneously during a single scan to produce more than one tomogram.

NARM means any naturally occurring or accelerator-produced radioactive material. It does not include byproduct, source, or special nuclear material.

Natural radioactivity means radioactivity of naturally occurring nuclides.

Noise means the standard deviation of the fluctuations in CTN expressed as a percentage of the attenuation coefficient of water. Its estimate (Sn) is calculated using the following expression:

$$S_n = \frac{100 \times CS \times s}{u_w}$$

where:

CS = Contrast scale.

u_w = Linear attenuation coefficient of water.

s = Estimated standard deviation of the CTN of picture elements in a specified area of the CT image.

Nominal tomographic section thickness means the full width at half-maximum of the sensitivity profile taken at the center of the cross-sectional volume over which X-ray transmission data are collected.

Nonstochastic effect means a health effect, the severity of which varies with the dose and for which a threshold is believed to exist. Radiation-induced cataract formation is an example of a nonstochastic effect. For purposes, deterministic effect is an equivalent term.

Normal operating procedures mean step-by-step instructions necessary to accomplish the analysis. These procedures shall include sample insertion and manipulation, equipment alignment, routine maintenance by the registrant (or licensee), and data recording procedures, which are related to radiation safety.

Nuclear Regulatory Commission (NRC) means the U.S. Nuclear Regulatory Commission or its duly authorized representatives.

Occupational dose means the dose received by an individual in the course of employment in which the individual's assigned duties involve exposure to radiation and/or radioactive material from licensed, registered, unlicensed and unregistered sources of radiation, whether in the possession of the licensee, registrant, or other person. Occupational dose does not include dose received: from background radiation, from any medical administration the individual has received, from voluntary participation in medical research programs, or as a member of the public.

Offshore platform radiography means industrial radiography conducted from a platform over a body of water.

Open-beam configuration means an analytical X-ray system in which an individual could accidentally place some part of his body in the primary beam path during normal operation.

Order of abatement means a legal order of the Administrator pursuant to Chapter 23-1.3-8 of the General Laws of the State of Rhode Island requiring that the person to whom the order is issued shall, prior to a time fixed by the Administrator, which time shall not be later than ten days from the date of service of the order, cease and abate causing, allowing, or permitting violation(s) and take such action as may be necessary to comply with this chapter and codes, rules or regulations promulgated thereunder.

Output means the **EXPOSURE** rate, dose rate, or a quantity related in a known manner to these rates from a radiotherapy (teletherapy) unit for a specified set of exposure conditions.

Particle accelerator [See Accelerator].

Patient means an individual subjected to examination and treatment.

Peak tube potential means the maximum value of the potential difference across the X-ray tube during an exposure.

Permanent radiographic installation means an enclosed shielded room, cell, or vault, not located at a temporary jobsite, in which radiography is performed.

Person means any individual, corporation, partnership, firm, association, trust, estate, public or private institution, group, agency, political subdivision of this State, and other State or political subdivision or agency thereof, and any legal successor, representative, agent or agency of the foregoing, but shall not include federal government agencies.

Personnel monitoring equipment [See Individual monitoring devices].

Personal supervision means guidance and instruction by the supervisor who is physically present at the jobsite and watching the performance of the operation in such proximity that contact can be maintained and immediate assistance given as required.

Phantom means a volume of material behaving in a manner similar to tissue with respect to the attenuation and scattering of radiation.

Pharmacist means an individual registered to engage in the practice of pharmacy in this State pursuant to Section 5-19-19 of the General Laws of Rhode Island, as amended, entitled, "Pharmacy".

Phototimer (See Automatic **EXPOSURE** control).

Physician means a person with a license to practice allopathic or osteopathic medicine in this State under Rhode Island general laws.

Picture element means an elemental area of a tomogram.

PID (See Position indicating device).

Planned special exposure means an infrequent exposure to radiation, separate from and in addition to the annual occupational dose limits.

Position indicating device means a device on dental X-ray equipment used to indicate the beam position and to establish a definite source-surface (skin) distance. It may or may not incorporate or serve as a beam-limiting device.

Practical Examination means a demonstration through practical application of the safety rules and principles in industrial radiography including use of all appropriate equipment and procedures.

Primary beam means ionizing radiation which passes through an aperture of the source housing by a direct path from the X-ray tube or a radioactive source located in the radiation source housing.

Primary dose monitoring system means a system which will monitor the useful beam during irradiation and which will terminate irradiation when a pre-selected number of dose monitor units have been acquired.

Primary protective barrier (See Protective barrier).

Projection sheath (See Guide tube”).

Projector (See “Radiographic exposure device”).

Protective apron means an apron made of radiation-attenuating materials used to reduce exposure to radiation.

Protected area means an area which provides radiation protection to X-ray equipment operators, sufficient to assure compliance with Part A under all operating conditions.

Protective barrier means a barrier of radiation absorbing material(s) used to reduce radiation exposure pursuant to the requirements of Part A. The types of protective barriers are as follows:

(1) Primary protective barrier means the material(s), excluding filters, placed in the useful beam for radiation protection purposes.

(2) Secondary protective barrier means a barrier of radiation absorbing material(s) providing protection from stray radiation exposure.

Protective glove means a glove made of radiation absorbing materials used to reduce radiation exposure.

Public dose means the dose received by a member of the public from exposure to radiation or radioactive material released by a licensee or registrant, or to any other source of radiation under the control of the licensee or registrant. Public dose does not include occupational dose, dose received from background radiation, from any medical administration the individual has received, or dose from voluntary participation in medical research programs.

Pyrophoric liquid means any liquid that ignites spontaneously in dry or moist air at or below 130 °F (54.4 °C). A pyrophoric solid is any solid material, other than one classed as an explosive, which under normal conditions is liable to cause fires through friction, retained heat from manufacturing or processing, or which can be ignited readily and, when ignited, burns so vigorously and persistently as to create a serious transportation, handling, or disposal hazard. Included are spontaneously combustible and water-reactive materials.

Quality Assurance Program means a program to ensure radiographic image quality whereby periodic monitoring of film processing and imaging equipment is performed.

AYYY

Quality factor" (Q) means the modifying factor, listed in Tables I and II of A.1.9, that is used to derive dose equivalent from absorbed dose.

Quarter means a period of time equal to one-fourth of the year observed by the licensee, approximately 13 consecutive weeks, providing that the beginning of the first quarter in a year coincides with the starting date of the year and that no day is omitted or duplicated in consecutive quarters.

Rad means the special unit of absorbed dose. One rad is equal to an absorbed dose of 100 erg per gram or 0.01 joule per kilogram (0.01 gray).

Radiation means:

(1) alpha particles, beta particles, gamma rays, x rays, neutrons, high-speed electrons, high-speed protons, and other particles capable of producing ions. For purposes, ionizing radiation is an equivalent term. Radiation, as used in these regulations, does not include non-ionizing radiation, such as radiowaves, visible, infrared, or ultraviolet light; or

(2) any electromagnetic radiation which can be generated during the operation of a microwave oven.

Radiation area means any area, accessible to individuals, in which radiation levels could result in an individual receiving a dose equivalent in excess of 0.05 mSv (0.005 rem) in 1 hour at 30 centimeters from the source of radiation or from any surface that the radiation penetrates.

Radiation detector means a device which in the presence of radiation provides a signal or other indication suitable for use in measuring one or more quantities of incident radiation.

Radiation dose [See Dose].

Radiation head means the structure from which the useful beam emerges.

Radiation machine means any device capable of producing radiation except, those devices with radioactive material as the only source of radiation.

Radiation safety officer means an individual who has the knowledge and responsibility to apply appropriate radiation protection regulations.

Radiation safety officer for industrial radiography means an individual with the responsibility for the overall radiation safety program on behalf of the licensee or registrant and who meets the requirements of E.2.21.

Radiation therapy simulation system means a radiographic or fluoroscopic X-ray system intended for localizing the volume to be exposed during radiation therapy and confirming the position and size of the therapeutic irradiation field.

Radioactive marker means radioactive material placed subsurface or on a structure intended for subsurface use for the purpose of depth determination or direction orientation.

Radioactive material means any material (solid, liquid, or gas) which emits radiation spontaneously.

Radioactivity means the transformation of unstable atomic nuclei by the emission of radiation.

Radiobioassay [See Bioassay].

Radiograph means an image receptor on which the image is created directly or indirectly by an X-ray pattern and results in a permanent record.

Radiographer means any individual who performs or who, in attendance at the site where the source(s) of radiation are being used, personally supervises industrial radiographic operations and who is responsible to the licensee or registrant for assuring compliance with the requirements of the Agency's regulations and the conditions of the license and/or certificate of registration.

Radiographer certification means written approval received from a certifying entity stating that an individual has satisfactorily met certain established radiation safety, testing, and experience criteria.

Radiographer's assistant means any individual who, under the direct supervision of a radiographer, uses sources of radiation, radiographic exposure devices, related handling tools, or radiation survey instruments in industrial radiography.

Radiographic exposure device (also called a camera, or a projector) means any instrument containing a sealed source fastened or contained therein, in which the sealed source or shielding thereof may be moved, or otherwise changed, from a shielded to unshielded position for purposes of making a radiographic exposure.

Radiographic imaging system means any system whereby a permanent or semipermanent image is recorded on an image receptor by the action of ionizing radiation.

Radiographic operations means all activities associated with the presence of sources of radiation during use of the device or transport (except when being transported by a common or contract transport), to include surveys to confirm the adequacy of boundaries, setting up equipment and any activity inside restricted area boundaries.

Radiotherapy Physicist means: (1) an individual who is registered with the Agency in accordance with Subpart B.4 to provide Radiotherapy Physics Services; or (2) an individual identified as the qualified radiotherapy physicist on an Agency Certificate of Registration

Rating means the operating limits as specified by the component manufacturer.

Recording means producing a permanent form of an image resulting from X-ray photons (e.g., film, video tape).

Reference Man means a hypothetical aggregation of human physical and physiological characteristics determined by international consensus. These characteristics may be used by researchers and public health workers to standardize results of experiments and to relate biological insult to a common base. A description of the Reference Man is contained in the International Commission on Radiological Protection report, ICRP Publication 23, Report of the Task Group on Reference Man.

Reference plane means a plane which is displaced from and parallel to the tomographic plane.

Registrant means (1) any person who is registered with the Agency and is legally obligated to register with the Agency pursuant to these regulations and the Act; or (2) as used in part B, any person who owns or possesses and administratively controls an X-ray system or particle accelerator, and any person who is engaged in the business of installing or offering to in install X-ray equipment or is engaged in the business of furnishing or offering to furnish X-ray equipment servicing or radiation physics services, and are required by part B to register with the Agency.

Registration means registration with the Agency in accordance with the regulations adopted by the Agency.

Regulations of the U.S. Department of Transportation means the regulations in 49 CFR Parts 170-189.

Rem means the special unit of any of the quantities expressed as dose equivalent. The dose equivalent in rem is equal to the absorbed dose in rad multiplied by the quality factor (1 rem = 0.01 sievert).

Remanufacturing means modifying a CT X-ray system in such a way that the resulting dose and imaging performance becomes substantially equivalent to any CT X-ray system manufactured by the original manufacturer on or after 29 November 1984.

Research and development means (1) theoretical analysis, exploration, or experimentation; or (2) the extension of investigative findings and theories of a scientific or technical nature into practical application for experimental and demonstration purposes, including the experimental production and testing of models, devices, equipment, materials, and processes. Research and development does not include the internal or external administration of radiation or radioactive material to human beings.

Research and development X-ray equipment means equipment generating x-radiation for research and development purposes.

Research and development X-ray system means a group of local and remote components utilizing X-rays for research and development purposes. Local components include those that are struck by X-rays such as radiation source housings, port and shutter assemblies, collimators, sample holders, cameras, goniometers, detectors and shielding. Remote components include power supplies, transformers, amplifiers, readout devices and control panels.

Respiratory protective equipment means an apparatus, such as a respirator, used to reduce an individual's intake of airborne radioactive materials.

Response time means the time required for an instrument system to reach 90 percent of its final reading when the radiation-sensitive volume of the instrument system is exposed to a step change in radiation flux from zero sufficient to provide a steady state midscale reading.

Restricted area means an area, access to which is limited by the licensee or registrant for the purpose of protecting individuals against undue risks from exposure to sources of radiation. Restricted area does not include areas used as residential quarters, but separate rooms in a residential building may be set apart as a restricted area.

Roentgen (R) means the special unit of **EXPOSURE**. One roentgen equals 2.58 x 10^{-4} coulombs/kilogram of air (see **EXPOSURE** and Section A.1.9).

S-tube means a tube through which the radioactive source travels when inside a radiographic exposure device.

Sanitary sewerage means a system of public sewers for carrying off waste water and refuse, but excluding sewage treatment facilities, septic tanks, and leach fields owned or operated by the licensee or registrant.

Scan means the complete process of collecting X-ray transmission data for the production of a tomogram. Data can be collected simultaneously during a single scan for the production of one or more tomograms.

Scan increment means the amount of relative displacement of the patient with respect to the CT system between successive scans measured along the direction of such displacement.

Scan sequence means a preselected set of two or more scans performed consecutively under preselected CT conditions of operation.

Scan time means the period of time between the beginning and end of X-ray transmission data accumulation for a single scan.

Scattered radiation means radiation that, during passage through matter, has been deviated in direction (See Direct scattered radiation).

Sealed source means any radioactive material that is encased in a capsule designed to prevent leakage or escape of the radioactive material.

Secondary protective barrier (See Protective barrier).

Shallow dose equivalent (H_s), which applies to the external exposure of the skin or an extremity, means the dose equivalent at a tissue depth of 0.007 centimeter (7 mg/cm^2) averaged over an area of 1 square centimeter.

Shielded position means the location within the radiographic exposure device or source changer where the sealed source is secured and restricted from movement.

Shielded-room radiography means industrial radiography conducted in a room so shielded that every location on the exterior meets the conditions specified in Section A.2.5.

Shutter means a device attached to the tube housing assembly which can totally intercept the useful beam and which has a lead equivalency not less than that of the tube housing assembly.

SI means the abbreviation for the International System of Units.

AYYY

Sievert means the SI unit of any of the quantities expressed as dose equivalent. The dose equivalent in sievert is equal to the absorbed dose in gray multiplied by the quality factor (1 Sv = 100 rem).

Single tomogram system means a CT system which obtains X-ray transmission data during a scan to produce a single tomogram.

Site boundary means that line beyond which the land or property is not owned, leased, or otherwise controlled by the licensee or registrant.

Source means the focal spot of the X-ray tube.

Source assembly means an assembly that consists of the sealed source and a connector that attaches the source to the control cable. The source assembly may also include a stop ball used to secure the source in the shielded position.

Source changer means a device designed and used for replacement of sealed sources in radiographic exposure devices including those also used for transporting and storage of sealed sources.

Source holder means a housing or assembly into which a radioactive source is placed for the purpose of facilitating the handling and use of the source in well-logging operations.

Source-image receptor distance (SID) means the distance from the source to the center of the input surface of the image receptor.

Source material means:

(1) Uranium or thorium, or any combination thereof, in any physical or chemical form; or

(2) Ores that contain by weight one-twentieth of one percent (0.05 percent) or more of uranium, thorium, or any combination of uranium and thorium. Source material does not include special nuclear material.

Source of radiation means any radioactive material, or any device of equipment emitting or capable of producing radiation.

Source stop [See “Exposure head”].

Special form radioactive material means radioactive material which satisfies the following conditions:

(1) It is either a single solid piece or is contained in a sealed capsule that can be opened only by destroying the capsule.

(2) The piece or capsule has at least one dimension not less than 0.197 in. (5 mm); and

(3) It satisfies the test requirements of 10 CFR 71.75.

Special nuclear material means:

(1) Plutonium, uranium-233, uranium enriched in the isotope 233 or in the isotope 235, and any other material that the Agency declares by order to be special nuclear material after the U.S. Nuclear Regulatory Commission, pursuant to the provisions of section 51 of the Atomic Energy Act of 1954, as amended, determines to be special nuclear material, but does not include source material; or

(2) Any material artificially enriched by any of the foregoing but does not include source material.

Special nuclear material in quantities not sufficient to form a critical mass means uranium enriched in the isotope U-235 in quantities not exceeding 350 grams of contained U-235; uranium-233 in quantities not exceeding 200 grams; plutonium in quantities not exceeding 200 grams; or any combination of them in accordance with the following formula: For each kind of special nuclear material, determine the ratio between the quantity of that special nuclear material and the quantity specified above for the same kind of special nuclear material. The sum of such ratios for all of the kinds of special nuclear material in combination shall not exceed "1" (i.e., unity). For example, the following quantities in combination would not exceed the limitation and are within the formula:

$$\frac{175 \text{ (grams contained U-235)}}{350} + \frac{50 \text{ (grams U-233)}}{200} + \frac{50 \text{ (grams Pu)}}{200} = 1$$

Spot check means a procedure which is performed to assure that a previous calibration continues to be valid.

Spot film means a radiograph which is made during a fluoroscopic examination to permanently record conditions which exist during that fluoroscopic procedure.

SSD means the distance between the source and the skin of the patient.

Stochastic effect means a health effect that occurs randomly and for which the probability of the effect occurring, rather than its severity, is assumed to be a linear function of dose without threshold. Hereditary effects and cancer incidence are examples of stochastic effects. For purposes, probabilistic effect is an equivalent term.

Storage area means any location, facility, or vehicle which is used to store or to secure a radiographic exposure device, a storage container, or a sealed source when it is not in use and which is locked or has a physical barrier to prevent accidental exposure, tampering with, or unauthorized removal of the device, container, or source.

Storage container means a container in which sealed sources are secured and stored.

Stationary equipment (See X-ray equipment).

Stray radiation means the sum of leakage and scattered radiation.

Subsurface tracer study means the release of a substance tagged with radioactive material for the purpose of tracing the movement or position of the tagged substance in the well-bore or adjacent formation.

Survey means an evaluation of the radiological conditions and potential hazards incident to the production, use, transfer, release, disposal, or presence of sources of radiation. When appropriate, such evaluation includes, but is not limited to, tests, physical examinations, and measurements of levels of radiation or concentrations of radioactive material present.

Target means that part of a radiation source which intercepts a beam of accelerated particles with subsequent emission of other radiation.

Technique factors means the conditions of operation. They are specified as follows:

(1) For capacitor energy storage equipment, peak tube potential in kV and quantity of charge in mAs.

(2) For field emission equipment rated for pulsed operation, peak tube potential in kV and number of X-ray pulses.

(3) For all other equipment, peak tube potential in kV and either tube current in mA and exposure time in seconds, or the product of tube current and exposure time in mAs.

Teletherapy means therapeutic irradiation in which the source of radiation is at a distance from the body.

Teletherapy Physicist means: (1) an individual who is registered with the Agency in accordance

with Subpart B.4 to provide Teletherapy Physics Services; or (2) an individual identified as the qualified teletherapy physicist on an Agency license.

Temporary jobsite means a location where radiographic operations are conducted and where licensed material or registered machines may be stored other than those location(s) of use authorized on the license and/or certificate of registration.

Termination means the end of employment with the licensee or registrant or, in the case of individuals not employed by the registrant or licensee, the end of a work assignment in the registrant's or licensee's restricted areas in a given calendar quarter, without expectation or specific scheduling of reentry into the licensee's or registrant's restricted areas during the remainder of that calendar quarter.

Termination of irradiation means the stopping of irradiation in a fashion which will not permit continuance of irradiation without the resetting of operating conditions at the control panel.

Test means the process of verifying compliance with an applicable regulation.

These regulations mean all parts of Rhode Island Rules and Regulations for the Control of Radiation.

Tomographic plane means that geometric plane which is identified as corresponding to the output tomogram.

Tomographic section means the volume of an object whose X-ray attenuation properties are imaged in a tomogram.

Total effective dose equivalent (TEDE) means the sum of the deep dose equivalent for external exposures and the committed effective dose equivalent for internal exposures.

Total organ dose equivalent (TODE) means the sum of the deep dose equivalent and the committed dose equivalent to the organ receiving the highest dose as described in A.5.7(a)(6).

Traceable to a national standard means that a quantity or a measurement has been compared to a national standard directly or indirectly through one or more intermediate steps and that all comparisons have been documented.

Treatment field means the area of the patient's skin which is to be irradiated.

Tube means an X-ray tube, unless otherwise specified.

Tube housing assembly means the tube housing with tube installed. It includes high-voltage and/or filament transformers and other appropriate elements when such are contained within the tube housing.

Tube rating chart means the set of curves which specify the rated limits of operation of the tube in terms of the technique factors.

Underwater radiography means industrial radiography performed when the radiographic exposure device and/or related equipment are beneath the surface of the water.

Unrefined and unprocessed ore means ore in its natural form prior to any processing, such as grinding, roasting, beneficiating, or refining.

Unrestricted area means an area, access to which is neither limited nor controlled by the licensee or registrant.

U.S. Department of Energy means the Department of Energy established by Public Law 95-91, August 4, 1977, 91 Stat. 565, 42 U.S.C. 7101 et seq., to the extent that the Department exercises functions formerly vested in the U.S. Atomic Energy Commission, its Chairman, members, officers and components and transferred to the U.S. Energy Research and Development Administration and to the Administrator thereof pursuant to sections 104 (b), (c) and (d) of the Energy Reorganization Act of 1974 (Public Law 93-438, October 11, 1974, 88 Stat. 1233 at 1237, 42 U.S.C 5814, effective January 19, 1975) and retransferred to the Secretary of Energy pursuant to section 301 (a) of the Department of Energy Organization Act (Public Law 95-91, August 4, 1977, 91 Stat. 565 at 577-578, 42 U.S.C. 7151, effective October 1, 1977).

AYYY

Useful beam means the radiation emanating from the tube housing port or the radiation head and passing through the aperture of the beam- limiting device when the exposure controls are in a mode to cause the system to produce radiation.

Variable-aperture beam-limiting device means a beam-limiting device which has capacity for stepless adjustment of the X-ray field size at a given SID.

Very high radiation area means an area, accessible to individuals, in which radiation levels from radiation sources external to the body could result in an individual receiving an absorbed dose in excess of 5 Gy (500 rad) in 1 hour at 1 meter from a source of radiation or 1 meter from any surface that the radiation penetrates.

Virtual source means a point from which radiation appears to originate.

Visible area means that portion of the input surface of the image receptor over which incident X-ray photons produce a visible image.

Visiting authorized user means an authorized user who is not identified on the license of the licensee being visited.

Waste Handling Licensees means persons licensed to receive and store radioactive wastes prior to disposal and/or persons licensed to dispose of radioactive waste.

Week means 7 consecutive days starting on Sunday.

Weighting factor w_T for an organ or tissue (T) means the proportion of the risk of stochastic effects resulting from irradiation of that organ or tissue to the total risk of stochastic effects when the whole body is irradiated uniformly. For calculating the effective dose equivalent, the values of w_T are:

ORGAN DOSE WEIGHTING FACTORS

Organ or Tissue	w_T
Gonads	0.25
Breast	0.15
Red bone marrow	0.12
Lung	0.12
Thyroid	0.03
Bone surfaces	0.03
Remainder	0.30[a]
Whole Body	1.00[b]

[a] 0.30 results from 0.06 for each of 5 remainder organs, excluding the skin and the lens of the eye, that receive the highest doses.

[b] For the purpose of weighting the external whole body dose, for adding it to the internal dose, a single weighting factor, w_T = 1.0, has been specified. The use of other weighting factors for external exposure will be approved on a case-by-case basis until such time as specific guidance is issued.

Well-bore means a drilled hole in which wireline service operations and subsurface tracer studies are performed.

Well-logging means the lowering and raising of measuring devices or tools which may contain sources of radiation into well-bores or cavities for the purpose of obtaining information about the well and/or adjacent formations.

Whole body means, for purposes of external exposure, head, trunk including male gonads, arms above the elbow, or legs above the knee.

Wireline means a cable containing one or more electrical conductors which is used to lower and raise logging tools in the well-bore.

Wireline service operation means any evaluation or mechanical service which is performed in the well-bore using devices on a wireline.

Worker means an individual engaged in work under a license or registration issued by the Agency and controlled by a licensee or registrant, but does not include the licensee or registrant.

Working level (WL) means any combination of short-lived radon daughters in 1 liter of air that will result in the ultimate emission of 1.3 x 10^5 MeV of potential alpha particle energy. The short-lived radon daughters are -- for radon-222: polonium-218, lead-214, bismuth-214, and polonium-214; and for radon-220: polonium-216, lead-212, bismuth-212, and polonium-212.

Working level month (WLM) means an exposure to 1 working level for 170 hours -- 2,000 working hours per year divided by 12 months per year is approximately equal to 170 hours per month.

X-ray control means a device which controls input power to the X-ray high-voltage generator and/or the X-ray tube. It includes equipment which controls the technique factors of an X-ray exposure.

X-ray equipment means an X-ray system, subsystem, or major component thereof. (Examples of major components are: tube housing assemblies, X-ray controls, X-ray high voltage generators, fluoroscopic imaging assemblies, tables, cradles, film changers, cassette holders and beam limiting devices). Types of X-ray equipment are as follows:

(1) Mobile X-ray equipment means X-ray equipment mounted on a permanent base with wheels and/or casters for moving while completely assembled.

(2) Portable X-ray equipment means X-ray equipment designed to be hand-carried.

(3) Stationary X-ray equipment means X-ray equipment which is installed in a fixed location.

X-ray field means that area of the intersection of the useful beam and any one of the set of planes parallel to and including the plane of the image receptor, whose perimeter is the locus of points at which the **EXPOSURE** rate is one-fourth of the maximum in the intersection.

X-ray high-voltage generator means a device which transforms electrical energy from the potential supplied by the X-ray control to the tube operating potential. The device may also include means for transforming alternating current to direct current, filament transformers for the X-ray tube(s), high-voltage switches, electrical protective devices, and other appropriate elements.

X-ray subsystem means any combination of two or more components of an X-ray system.

X-ray system means an assemblage of components for the controlled production of X-rays. It includes minimally an X-ray high-voltage generator, an X-ray control, a tube housing assembly, a beam-limiting device, and the necessary supporting structures. Additional components which function with the system are considered integral parts of the system.

X-ray tube means any electron tube which is designed to be used primarily for the production of X-rays.

Year means the period of time beginning in January used to determine compliance with the provisions. The licensee or registrant may change the starting date of the year used to determine compliance by the licensee or registrant provided that the change is made at the beginning of the year and that no day is omitted or duplicated in consecutive years.

[REMAINDER OF PAGE INTENTIONALLY LEFT BLANK]

A.1 GENERAL PROVISIONS

A.1.1 **Purpose and Scope.**

(a) This part establishes generally applicable provisions, including standards for protection against radiation hazards, notices, instructions and reports to workers, and inspections. Except as otherwise specifically provided, these regulations apply to all persons who receive, possess, use, transfer, own, or acquire any source of radiation. The limits in this Part do not apply to doses due to background radiation, due to any medical administration the individual has received, or due to voluntary participation in medical research programs; provided, however, that nothing in these regulations shall apply to any person to the extent such person is subject to regulation by the U.S. Nuclear Regulatory Commission.

(b) The requirements of this part are designed to control the receipt, possession, use, transfer, and disposal of sources of radiation by any licensee or registrant so the total dose to an individual, including doses resulting from all sources of radiation other than background radiation, does not exceed the standards for protection against radiation prescribed in this part. However, nothing in Part A shall be construed as limiting actions that may be necessary to protect health and safety.

(c) Except as specifically provided in other parts, Part A applies to persons licensed or registered by the Agency to receive, possess, use, transfer, or dispose of sources of radiation. The limits in this part do not apply to doses due to background radiation, to exposure of patients to radiation for the purpose of medical diagnosis or therapy, or to voluntary participation in medical research programs.

A.1.2 **Exemptions.**

(a) **General Provision.** The Agency may, upon application or upon its own initiative, grant such exemptions or exceptions from the requirements as it determines are authorized by law and will not result in undue hazard to public health and safety or property.

(b) **U.S. Department of Energy (DOE) Contractors and U.S. Nuclear Regulatory Commission Contractors.** Any U.S. Department of Energy (DOE) contractor or subcontractor and any U.S. Nuclear Regulatory Commission contractor or subcontractor of the following categories operating within this State is exempt from these regulations to the extent that such contractor or subcontractor under his contract receives, possesses, uses, transfers, or acquires sources of radiation:

(1) Prime contractors performing work for the Department of Energy (DOE) at U.S. Government-owned or -controlled sites, including the transportation of sources of radiation to or from such sites and the performance of contract services during temporary interruptions of such transportation.

(2) Prime contractors of the U.S. Department of Energy (DOE) performing research in, or development, manufacture, storage, testing or transportation of atomic weapons or components thereof;

(3) Prime contractors of the U.S. Department of Energy (DOE) using or operating nuclear reactors or other nuclear devices in a United States Government-owned vehicle or vessel; and

(4) Any other prime contractor or subcontractor of the U.S. Department of Energy (DOE) or of the U.S. Nuclear Regulatory Commission when the State and the U.S. Nuclear Regulatory Commission jointly determine,

(i) that, the exemption of the prime contractor or subcontractor is authorized by law, and

(ii) that, under the terms of the contract or subcontract, there is adequate assurance that the work thereunder can be accomplished without undue risk to the public health and safety.

A.1.3 **Records.** Each licensee and registrant shall maintain records showing the receipt, transfer, and disposal of all sources of radiation. All records required by these regulations shall be maintained indefinitely unless otherwise specified in these regulations.

A.1.4 **Inspections.**

(a) Each licensee and registrant shall afford the Agency at all reasonable times the opportunity to inspect sources of radiation and the premises and facilities wherein such sources of radiation are used or stored, and the cooperation and assistance of the registrant or licensee, or his staff, if needed.

(b) Each licensee and registrant shall make available to the Agency for inspection, upon reasonable notice, records maintained pursuant to these regulations.

A.1.5 **Tests.** Each licensee and registrant shall perform upon instructions from the Agency, or shall permit the Agency to perform such reasonable tests as the Agency deems appropriate or necessary including, but not limited to, tests of:

(a) Sources of radiation;

(b) Facilities wherein sources of radiation are used or stored;

(c) Radiation detection and monitoring instruments; and

(d) Other equipment and devices used in connection with utilization or storage of licensed or registered sources of radiation.

A.1.6 **Additional Requirements.** The Agency may, by rule, regulations, or order, impose upon any licensee or registrant such requirements in addition to those established in these regulations as it deems appropriate or necessary to minimize danger to public health and safety or property.

A.1.7 **Violations.** An injunction or other court order may be obtained prohibiting any violation of any provision of the Act or any regulation or order issued thereunder. Any person who willfully violates any provision of the Act or any regulation or order issued thereunder may be guilty of a misdemeanor and upon conviction, may be punished by fine or imprisonment or both, as provided by law.

A.1.8 **Communications.** All communications and reports concerning these regulations, and applications filed thereunder, should be addressed to the Agency at its office located at:

Office of Occupational and Radiological Health
Three Capitol Hill- Room 206
Providence, RI 02908-5097

A.1.9 **Units of Exposure and Dose.**

(a) As used in these regulations, the unit of **Exposure** is the coulomb per kilogram (C/kg) of air. One roentgen is equal to 2.58×10^{-4} coulomb per kilogram of air.

(b) As used in these regulations, the units of dose are:

Gray (Gy) is the SI unit of absorbed dose. One gray is equal to an absorbed dose of 1 joule per kilogram (100 rad).

Rad is the special unit of absorbed dose. One rad is equal to an absorbed dose of 100 erg per gram or 0.01 joule per kilogram (0.01 Gy).

Rem is the special unit of any of the quantities expressed as dose equivalent. The dose equivalent in rem is equal to the absorbed dose in rad multiplied by the quality factor (1 rem = 0.01 Sv).

Sievert is the SI unit of any of the quantities expressed as dose equivalent. The dose equivalent in sievert is equal to the absorbed dose in gray multiplied by the quality factor (1 Sv = 100 rem).

(c) As used in these regulations, the quality factors for converting absorbed dose to dose equivalent are shown in Table I.

TABLE I

QUALITY FACTORS AND ABSORBED DOSE EQUIVALENCIES

TYPE OF RADIATION	Quality Factor (Q)	Absorbed Dose Equal to a Unit Dose Equivalent[a]
X, gamma, or beta radiation and high-speed electrons	1	1
Alpha particles, multiple-charged particles, fission fragments and heavy particles of unknown charge	20	0.05
Neutrons of unknown energy	10	0.1
High-energy protons	10	0.1

[a]Absorbed dose in gray equal to 1 Sv or the absorbed dose in rad equal to 1 rem.

(d) If it is more convenient to measure the neutron fluence rate than to determine the neutron dose equivalent rate in sievert per hour or rem per hour, as provided in A.1.9(c), 0.01 Sv (1 rem) of neutron radiation of unknown energies may, for purposes, be assumed to result from a total fluence of 25 million neutrons per square centimeter incident upon the body. If sufficient information exists to estimate the approximate energy distribution of the neutrons, the licensee or registrant may use the fluence rate per unit dose equivalent or the appropriate Q value from Table II to convert a measured tissue dose in gray or rad to dose equivalent in sievert or rem.

[REMAINDER OF PAGE INTENTIONALLY LEFT BLANK]

TABLE II

MEAN QUALITY FACTORS, Q, AND FLUENCE PER UNIT DOSE EQUIVALENT FOR MONOENERGETIC NEUTRONS

	Neutron Energy (MeV)	**Quality Factor**[a] (Q)	**Fluence per Unit Dose Equivalent**[b] (neutrons cm^{-2} rem^{-1})	**Fluence per Unit Dose Equivalent**[b] (neutrons cm^{-2} Sv^{-1})
(thermal)	2.5×10^{-8}	2	980×10^{6}	980×10^{8}
	1×10^{-7}	2	980×10^{6}	980×10^{8}
	1×10^{-6}	2	810×10^{6}	810×10^{8}
	1×10^{-5}	2	810×10^{6}	810×10^{8}
	1×10^{-4}	2	840×10^{6}	840×10^{8}
	1×10^{-3}	2	980×10^{6}	980×10^{8}
	1×10^{-2}	2.5	1010×10^{6}	1010×10^{8}
	1×10^{-1}	7.5	170×10^{6}	170×10^{8}
	5×10^{-1}	11	39×10^{6}	39×10^{8}
	1	11	27×10^{6}	27×10^{8}
	2.5	9	29×10^{6}	29×10^{8}
	5	8	23×10^{6}	23×10^{8}
	7	7	24×10^{6}	24×10^{8}
	10	6.5	24×10^{6}	24×10^{8}
	14	7.5	17×10^{6}	17×10^{8}
	20	8	16×10^{6}	16×10^{8}
	40	7	14×10^{6}	14×10^{8}
	60	5.5	16×10^{6}	16×10^{8}
	1×10^{2}	4	20×10^{6}	20×10^{8}
	2×10^{2}	3.5	19×10^{6}	19×10^{8}
	3×10^{2}	3.5	16×10^{6}	16×10^{8}
	4×10^{2}	3.5	14×10^{6}	14×10^{8}

[a]Value of quality factor (Q) at the point where the dose equivalent is maximum in a 30-centimeter diameter cylinder tissue-equivalent phantom.

[b]Monoenergetic neutrons incident normally on a 30-centimeter diameter cylinder tissue-equivalent phantom.

A.1.10 **Units of Activity**. For purposes, activity is expressed in the SI unit of becquerel (Bq) or in the special unit of curie (Ci), or their multiples, or disintegrations or transformations per unit of time.

(a) One becquerel (Bq) = 1 disintegration or transformation per second (dps or tps).

(b) One curie (Ci) = 3.7×10^{10} disintegrations or transformations per second (dps or tps) = 3.7×10^{10} becquerel (Bq) = 2.22×10^{12} disintegrations or transformations per minute (dpm or tpm).

[REMAINDER OF PAGE INTENTIONALLY LEFT BLANK]

A.2 STANDARDS FOR PROTECTION AGAINST RADIATION

A.2.1 **Implementation.**

(a) Any existing license or registration condition that is more restrictive than Part A remains in force until there is an amendment or renewal of the license or registration.

(b) If a license or registration condition exempts a licensee or registrant from a provision of Part A in effect on or before 1 January 1994, it also exempts the licensee or registrant from the corresponding provision of this part.

(c) If a license or registration condition cites provisions of this part in effect prior to 1 January 1994, which do not correspond to any provisions of this part, the license or registration condition remains in force until there is an amendment or renewal of the license or registration that modifies or removes this condition.

A.2.2 **Radiation Protection Programs.**

(a) Each licensee or registrant shall develop, document, and implement a radiation protection program sufficient to ensure compliance with the provisions of this part. [See A.5.2 for recordkeeping requirements relating to these programs.]

(b) The licensee or registrant shall use, to the extent practicable, procedures and engineering controls based upon sound radiation protection principles to achieve occupational doses and doses to members of the public that are as low as is reasonably achievable (ALARA).

(c) The licensee or registrant shall, at intervals not to exceed 12 months, review the radiation protection program content and implementation.

A.2.3 **Occupational Dose Limits for Adults.**

(a) The licensee or registrant shall control the occupational dose to individual adults, except for planned special exposures pursuant to A.2.8, to the following dose limits:

(1) An annual limit, which is the more limiting of:

(i) The total effective dose equivalent being equal to 0.05 Sv (5 rem); or

(ii) The sum of the deep dose equivalent and the committed dose equivalent to any individual organ or tissue other than the lens of the eye being equal to 0.5 Sv (50 rem).

(2) The annual limits to the lens of the eye, to the skin, and to the extremities which are:

(i) A lens dose equivalent of 0.15 Sv (15 rem), and

(ii) A shallow dose equivalent of 0.5 Sv (50 rem) to the skin or to any extremity.

(b) Doses received in excess of the annual limits, including doses received during accidents, emergencies, and planned special exposures, shall be subtracted from the limits for planned special exposures that the individual may receive during the current year and during the individual's lifetime. [See A.2.8(e)(1) and (e)(2).]

(c) The assigned deep dose equivalent and shallow dose equivalent shall be for the portion of the body receiving the highest exposure:

(1) The deep dose equivalent, lens dose equivalent and shallow dose equivalent may be assessed from surveys or other radiation measurements for the purpose of demonstrating compliance with the occupational dose limits, if the individual monitoring device was not in the region of highest potential exposure, or the results of individual monitoring are unavailable; or

(2) For sources of radiation other than radioactive material, when a protective apron is worn and monitoring is conducted as specified in A.3.3(c), the effective dose equivalent for external radiation shall be determined as follows:

(i) When only one individual monitoring device is used and it is located at the neck outside the protective apron, and the reported dose exceeds 25 percent of the limit specified in A.2.3(a), the reported deep dose equivalent value multiplied by 0.3 shall be the effective dose equivalent for external radiation; or

(ii) When individual monitoring devices are worn, both under the protective apron at the waist and outside the protective apron at the neck, the effective dose equivalent for external radiation shall be assigned the value of the sum of the deep dose equivalent reported for the individual monitoring device located at the waist under the protective apron multiplied by 1.5 and the deep dose equivalent reported for the individual monitoring device located at the neck outside the protective apron multiplied by 0.04.

(d) Derived air concentration (DAC) and annual limit on intake (ALI) values are specified in Table I of Appendix B to this Part and may be used to determine the individual's dose and to demonstrate compliance with the occupational dose limits. [See A.5.7.]

(e) Notwithstanding the annual dose limits, the licensee shall limit the soluble uranium intake by an individual to 10 milligrams in a week in consideration of chemical toxicity. [See footnote 3 of Appendix B to this Part.]

(f) The licensee or registrant shall reduce the dose that an individual may be allowed to receive in the current year by the amount of occupational dose received while employed by any other person during the current year. [See A.2.7 of these regulations.]

A.2.4 **Compliance with Requirements for Summation of External and Internal Doses.**

(a) If the licensee or registrant is required to monitor pursuant to both A.3.3(a) and (b)., the licensee or registrant shall demonstrate compliance with the dose limits by summing external and internal doses. If the licensee or registrant is required to monitor only pursuant to A.3.3(a) or only pursuant to A.3.3(b), then summation is not required to demonstrate compliance with the dose limits. The licensee or registrant may demonstrate compliance with the requirements for summation of external and internal doses pursuant to A.2.4(b), (c) and (d). The dose equivalents for the lens of the eye, the skin, and the extremities are not included in the summation, but are subject to separate limits.

(b) **Intake by Inhalation.** If the only intake of radionuclides is by inhalation, the total effective dose equivalent limit is not exceeded if the sum of the deep dose equivalent divided by the total effective dose equivalent limit, and one of the following, does not exceed unity:

(1) The sum of the fractions of the inhalation ALI for each radionuclide; or

(2) The total number of derived air concentration-hours (DAC-hours) for all radionuclides divided by 2,000; or

(3) The sum of the calculated committed effective dose equivalents to all significantly irradiated organs or tissues (T) calculated from bioassay data using appropriate biological models and expressed as a fraction of the annual limit. For purposes of this requirement, an organ or tissue is deemed to be significantly irradiated if, for that organ or tissue, the product of the weighting factors, w_T, and the committed dose equivalent, $H_{T,50}$, per unit intake is greater than 10 percent of the maximum weighted value of $H_{T,50}$, that is, $w_T H_{T,50}$, per unit intake for any organ or tissue.

AYYY

(c) **Intake by Oral Ingestion.** If the occupationally exposed individual also receives an intake of radionuclides by oral ingestion greater than 10 percent of the applicable oral ALI, the licensee or registrant shall account for this intake and include it in demonstrating compliance with the limits.

(d) **Intake through Wounds or Absorption through Skin.** The licensee or registrant shall evaluate and, to the extent practical, account for intakes through wounds or skin absorption. The intake through intact skin has been included in the calculation of DAC for hydrogen-3 and does not need to be evaluated or accounted for pursuant to A.2.4(d).

A.2.5 **Determination of External Dose from Airborne Radioactive Material.**

(a) Licensees or registrants shall, when determining the dose from airborne radioactive material, include the contribution to the deep dose equivalent, lens dose equivalent, and shallow dose equivalent from external exposure to the radioactive cloud. [See Appendix B to this Part, footnotes 1 and 2.]

(b) Airborne radioactivity measurements and DAC values shall not be used as the primary means to assess the deep dose equivalent when the airborne radioactive material includes radionuclides other than noble gases or if the cloud of airborne radioactive material is not relatively uniform. The determination of the deep dose equivalent to an individual shall be based upon measurements using instruments or individual monitoring devices.

A.2.6 **Determination of Internal Exposure.**

(a) For purposes of assessing dose used to determine compliance with occupational dose equivalent limits, the licensee or registrant shall, when required pursuant to A.3.3, take suitable and timely measurements of:

(1) Concentrations of radioactive materials in air in work areas; or

(2) Quantities of radionuclides in the body; or

(3) Quantities of radionuclides excreted from the body; or

(4) Combinations of these measurements.

(b) Unless respiratory protective equipment is used, as provided in A.3.9, or the assessment of intake is based on bioassays, the licensee or registrant shall assume that an individual inhales radioactive material at the airborne concentration in which the individual is present.

(c) When specific information on the physical and biochemical properties of the radionuclides taken into the body or the behavior of the material in an individual is known, the licensee or registrant may:

(1) Use that information to calculate the committed effective dose equivalent, and, if used, the licensee or registrant shall document that information in the individual's record; and

(2) Upon prior approval of the Agency, adjust the DAC or ALI values to reflect the actual physical and chemical characteristics of airborne radioactive material, for example, aerosol size distribution or density; and

(3) Separately assess the contribution of fractional intakes of Class D, W, or Y compounds of a given radionuclide to the committed effective dose equivalent. [See Appendix B to this Part.]

(d) If the licensee or registrant chooses to assess intakes of Class Y material using the measurements given in Subparagraphs A.2.6(a)(2) or (a)(3), the licensee or registrant may delay the recording and reporting of the assessments for periods up to 7 months, unless otherwise required by A.5.13 or A.5.14. This delay permits the licensee or registrant to make additional measurements basic to the assessments.

AYYY

(e) If the identity and concentration of each radionuclide in a mixture are known, the fraction of the DAC applicable to the mixture for use in calculating DAC-hours shall be either:

(1) The sum of the ratios of the concentration to the appropriate DAC value, that is, D, W, or Y, from Appendix B to this Part for each radionuclide in the mixture; or

(2) The ratio of the total concentration for all radionuclides in the mixture to the most restrictive DAC value for any radionuclide in the mixture.

(f) If the identity of each radionuclide in a mixture is known, but the concentration of one or more of the radionuclides in the mixture is not known, the DAC for the mixture shall be the most restrictive DAC of any radionuclide in the mixture.

(g) When a mixture of radionuclides in air exists, a licensee or registrant may disregard certain radionuclides in the mixture if:

(1) The licensee or registrant uses the total activity of the mixture in demonstrating compliance with the dose limits in A.2.3 and in complying with the monitoring requirements in A.3.3(b); and

(2) The concentration of any radionuclide disregarded is less than 10 percent of its DAC; and

(3) The sum of these percentages for all of the radionuclides disregarded in the mixture does not exceed 30 percent.

(h) When determining the committed effective dose equivalent, the following information may be considered:

(1) In order to calculate the committed effective dose equivalent, the licensee or registrant may assume that the inhalation of one ALI, or an exposure of 2,000 DAC-hours, results in a committed effective dose equivalent of 0.05 Sv (5 rem) for radionuclides that have their ALIs or DACs based on the committed effective dose equivalent.

(2) For an ALI and the associated DAC determined by the nonstochastic organ dose limit of 0.5 Sv (50 rem), the intake of radionuclides that would result in a committed effective dose equivalent of 0.05 Sv (5 rem), that is, the stochastic ALI, is listed in parentheses in Table I of Appendix B. The licensee or registrant may, as a simplifying assumption, use the stochastic ALI to determine committed effective dose equivalent. However, if the licensee or registrant uses the stochastic ALI, the licensee or registrant shall also demonstrate that the limit in A.2.3(a)(1)(ii) is met.

A.2.7 **Determination of Prior Occupational Dose.**

(a) For each individual who is likely to receive, in a year, an occupational dose requiring monitoring pursuant to A.3.3, the licensee or registrant shall:

(1) Determine the occupational radiation dose received during the current year; and

(2) Attempt to obtain the records of lifetime cumulative occupational radiation dose.

(b) Prior to permitting an individual to participate in a planned special exposure, the licensee or registrant shall determine:

(1) The internal and external doses from all previous planned special exposures; and

(2) All doses in excess of the limits, including doses received during accidents and emergencies, received during the lifetime of the individual; and

(3) Lifetime cumulative occupational radiation dose.

(c) In complying with the requirements of A.2.7(a), a licensee or registrant may:

(1) Accept, as a record of the occupational dose that the individual received during the current year, a written signed statement from the individual, or from the individual's most recent employer for work involving radiation exposure, that discloses the nature and the amount of any occupational dose that the individual received during the current year; and

(2) Accept, as the record of lifetime cumulative radiation dose, an up-to-date Agency Form RCA-2 or equivalent, signed by the individual and countersigned by an appropriate official of the most recent employer for work involving radiation exposure, or the individual's current employer, if the individual is not employed by the licensee or registrant; and

(3) Obtain reports of the individual's dose equivalent from the most recent employer for work involving radiation exposure, or the individual's current employer, if the individual is not employed by the licensee or registrant, by telephone, telegram, facsimile, or letter. The licensee or registrant shall request a written verification of the dose data if the authenticity of the transmitted report cannot be established.

(d) (1) The licensee or registrant shall record the exposure history, as required by A.2.7(a), on Agency Form RCA-2, or other clear and legible record, of all the information required on that form. The form or record shall show each period in which the individual received occupational exposure to radiation or radioactive material and shall be signed by the individual who received the exposure. For each period for which the licensee or registrant obtains reports, the licensee or registrant shall use the dose shown in the report in preparing Agency Form RCA-2 or equivalent. For any period in which the licensee or registrant does not obtain a report, the licensee or registrant shall place a notation on Agency Form RCA-2 or equivalent indicating the periods of time for which data are not available.

(2) Licensees or registrants are not required to reevaluate the separate external dose equivalents and internal committed dose equivalents or intakes of radionuclides assessed pursuant to the regulations in this Part in effect before 1 January 1994. Further, occupational exposure histories obtained and recorded on Agency Form RCA-2 or equivalent before 1 January 1994, would not have included effective dose equivalent, but may be used in the absence of specific information on the intake of radionuclides by the individual.

(e) If the licensee or registrant is unable to obtain a complete record of an individual's current and previously accumulated occupational dose, the licensee or registrant shall assume:

(1) In establishing administrative controls pursuant to A.2.3(f) for the current year, that the allowable dose limit for the individual is reduced by 12.5 mSv (1.25 rem) for each quarter for which records were unavailable and the individual was engaged in activities that could have resulted in occupational radiation exposure; and

(2) That the individual is not available for planned special exposures.

(f) The licensee or registrant shall retain the records on Agency Form RCA-2 or equivalent until the Agency terminates each pertinent license or registration requiring this record. The licensee or registrant shall retain records used in preparing Agency Form RCA-2 or equivalent for 3 years after the record is made.

A.2.8 **Planned Special Exposures.** A licensee or registrant may authorize an adult worker to receive doses in addition to and accounted for separately from the doses received under the limits specified in A.2.3 provided that each of the following conditions is satisfied:

(a) The licensee or registrant authorizes a planned special exposure only in an exceptional situation when alternatives that might avoid the dose estimated to result from the planned special exposure are unavailable or impractical.

(b) The licensee or registrant, and employer if the employer is not the licensee or registrant, specifically authorizes the planned special exposure, in writing, before the exposure occurs.

AYYY

A.2.8(c)

(c) Before a planned special exposure, the licensee or registrant ensures that each individual involved is:

(1) Informed of the purpose of the planned operation; and

(2) Informed of the estimated doses and associated potential risks and specific radiation levels or other conditions that might be involved in performing the task; and

(3) Instructed in the measures to be taken to keep the dose ALARA considering other risks that may be present.

(d) Prior to permitting an individual to participate in a planned special exposure, the licensee or registrant ascertains prior doses as required by A.2.7(b) during the lifetime of the individual for each individual involved.

(e) Subject to A.2.3(b), the licensee or registrant shall not authorize a planned special exposure that would cause an individual to receive a dose from all planned special exposures and all doses in excess of the limits to exceed:

(1) The numerical values of any of the dose limits in A.2.3(a) in any year; and

(2) Five times the annual dose limits in A.2.3(a) during the individual's lifetime.

(f) The licensee or registrant maintains records of the conduct of a planned special exposure in accordance with A.5.6 and submits a written report in accordance with A.5.15.

(g) The licensee or registrant records the best estimate of the dose resulting from the planned special exposure in the individual's record and informs the individual, in writing, of the dose within 30 days from the date of the planned special exposure. The dose from planned special exposures shall not be considered in controlling future occupational dose of the individual pursuant to A.2.3(a) but shall be included in evaluations required by A.2.8(d) and (e).

A.2.9 **Occupational Dose Limits for Minors.** The annual occupational dose limits for minors are 10 percent of the annual occupational dose limits specified for adult workers in A.2.3.

A.2.10 **Dose to an Embryo/Fetus.**

(a) The licensee or registrant shall ensure that the dose equivalent to an embryo/fetus during the entire pregnancy, due to occupational exposure of a declared pregnant woman, does not exceed 5 mSv (0.5 rem). [See A.5.7 for recordkeeping requirements.]

(b) The licensee or registrant shall make efforts to avoid substantial variation[4] above a uniform monthly exposure rate to a declared pregnant woman so as to satisfy the limit in A.2.10(a).

(c) The dose equivalent to an embryo/fetus shall be taken as the sum of:

(1) The deep dose equivalent to the declared pregnant woman; and

(2) The dose equivalent to the embryo/fetus resulting from radionuclides in the embryo/fetus and radionuclides in the declared pregnant woman.

---

[4] T. N. C. R. P. NCRP R. N. R. L. E. I. R. S.

(d) If by the time the woman declares pregnancy to the licensee or registrant, the dose equivalent to the embryo/fetus has exceeded 5 mSv (0.5 rem) or is within 0.5 mSv (0.05 rem) of this dose, the licensee or registrant shall be deemed to be in compliance with A.2.10(a) if the additional dose equivalent to the embryo/fetus does not exceed 0.5 mSv (0.05 rem) during the remainder of the pregnancy.

A.2.11 **Dose Limits for Individual Members of the Public.**

(a) Each licensee or registrant shall conduct operations so that:

(1) The total effective dose equivalent to individual members of the public from the licensed or registered operation does not exceed 1 mSv (0.1 rem) in a year, exclusive of the dose contribution from background radiation, any medical administration the individual has received, exposure to individuals administered radioactive material and released in accordance with Section C.8.24 of these regulations, voluntary participation in medical research projects, and the licensee's disposal of radioactive material into sanitary sewerage in accordance with A.4.3; and

(2) The total effective dose equivalent to individual members of the public does not exceed the original design criteria of 5 mSv (0.5 rem) in a year at locations within registered facilities where only radiation machines were installed prior to 1 January 1994 and which continue to meet the original design criteria (e.g. workload, type and use of radiation machine, room configuration, etc.) on or after 1 January 1994; and

(3) The dose in any unrestricted area from external sources, exclusive of the dose contributions from individuals administered radioactive material and released in accordance with Section C.8.24 of these regulations, does not exceed 0.02 mSv (0.002 rem) in any one hour.

(b) If the licensee or registrant permits members of the public to have access to restricted areas, the limits for members of the public continue to apply to those individuals.

(c) A licensee, registrant, or an applicant for a license or registration may apply for prior Agency authorization to operate up to an annual dose limit for an individual member of the public of 5 mSv (0.5 rem). This application shall include the following information:

(1) Demonstration of the need for and the expected duration of operations in excess of the limit in A.2.11(a); and

(2) The licensee's or registrant's program to assess and control dose within the 5 mSv (0.5 rem) annual limit; and

(3) The procedures to be followed to maintain the dose ALARA.

(d) In addition to the requirements of this Part, a licensee or registrant subject to the provisions of the U.S. Environmental Protection Agency's generally applicable environmental radiation standards in 40 CFR 190 shall comply with those standards.

(e) The Agency may impose additional restrictions on radiation levels in unrestricted areas and on the total quantity of radionuclides that a licensee or registrant may release in effluents in order to restrict the collective dose.

A.2.12 **Compliance with Dose Limits for Individual Members of the Public.**

(a) The licensee or registrant shall make or cause to be made surveys of radiation levels in unrestricted areas and radioactive materials in effluents released to unrestricted areas to demonstrate compliance with the dose limits for individual members of the public in A.2.11.

(b) A licensee or registrant shall show compliance with the annual dose limit in A.2.11 by:

(1) Demonstrating by measurement or calculation that the total effective dose

equivalent to the individual likely to receive the highest dose from the licensed or registered operation does not exceed the annual dose limit; or

A.2.12(b)(2)

(2) Demonstrating that:

(i) The annual average concentrations of radioactive material released in gaseous and liquid effluents at the boundary of the unrestricted area do not exceed the values specified in Table II of Appendix B to this Part; and

(ii) If an individual were continually present in an unrestricted area, the dose from external sources would not exceed 0.02 mSv (0.002 rem) in an hour and 0.5 mSv (0.05 rem) in a year.

(c) Upon approval from the Agency, the licensee or registrant may adjust the effluent concentration values in Table II of Appendix B to this Part for members of the public, to take into account the actual physical and chemical characteristics of the effluents, such as, aerosol size distribution, solubility, density, radioactive decay equilibrium, and chemical form.

A.3 PRECAUTIONARY PROCEDURES

A.3.1 **Testing for Leakage or Contamination of Sealed Sources.**

(a) The licensee in possession of any sealed source shall assure that:

(1) Each sealed source, except as specified in A.3.1(b), is tested for leakage or contamination and the test results are received before the sealed source is put into use unless the licensee has a certificate from the transferor indicating that the sealed source was tested within 6 months before transfer to the licensee.

(2) Each sealed source that is not designed to emit alpha particles is tested for leakage or contamination at intervals not to exceed 6 months or at alternative intervals approved by the Agency, after evaluation of information specified by C.5.5(l)(4) and (5), an Agreement State, a Licensing State, or the U.S. Nuclear Regulatory Commission.

(3) Each sealed source that is designed to emit alpha particles is tested for leakage or contamination at intervals not to exceed 3 months or at alternative intervals approved by the Agency, after evaluation of information specified by C.5.5(l)(4) and (5), an Agreement State, a Licensing State, or the Nuclear Regulatory Commission.

(4) For each sealed source that is required to be tested for leakage or contamination, at any other time there is reason to suspect that the sealed source might have been damaged or might be leaking, the licensee shall assure that the sealed source is tested for leakage or contamination before further use.

(5) Tests for leakage for all sealed sources, except brachytherapy sources manufactured to contain radium, shall be capable of detecting the presence of 185 Bq (0.005 µCi) of radioactive material on a test sample. Test samples shall be taken from the sealed source or from the surfaces of the container in which the sealed source is stored or mounted on which one might expect contamination to accumulate. For a sealed source contained in a device, test samples are obtained when the source is in the "off" position.

(6) The test for leakage for brachytherapy sources manufactured to contain radium shall be capable of detecting an absolute leakage rate of 37 Bq (0.001 µCi) of radon-222 in a 24 hour period when the collection efficiency for radon-222 and its daughters has been determined with respect to collection method, volume and time.

(7) Tests for contamination from radium daughters shall be taken on the interior surface of brachytherapy source storage containers and shall be capable of detecting the presence of 185 Bq (0.005 µCi) of a radium daughter which has a half-life greater than 4 days.

(b) A licensee need not perform test for leakage or contamination on the following sealed

sources:

(1) Sealed sources containing only radioactive material with a half-life of less than 30 days;

(2) Sealed sources containing only radioactive material as a gas;

(3) Sealed sources containing 3.7 MBq (100 µCi) or less of beta or photon-emitting material or 370 kBq (10 µCi) or less of alpha-emitting material;

(4) Sealed sources containing only hydrogen-3;

(5) Seeds of iridium-192 encased in nylon ribbon; and

(6) Sealed sources, except teletherapy and brachytherapy sources, which are stored, not being used and identified as in storage. The licensee shall, however, test each such sealed source for leakage or contamination and receive the test results before any use or transfer unless it has been tested for leakage or contamination within 6 months before the date of use or transfer.

(c) Tests for leakage or contamination from sealed sources shall be performed by persons specifically authorized by the Agency, an Agreement State, a Licensing State, or the U.S. Nuclear Regulatory Commission to perform such services.

(d) Test results shall be kept in units of becquerel or microcurie and maintained for inspection by the Agency.

(e) The following shall be considered evidence that a sealed source is leaking:

(1) The presence of 185 Bq (0.005 µCi) or more of removable contamination on any test sample; or

(2) Leakage of 37 Bq (0.001 µCi) of radon-222 per 24 hours for brachytherapy sources manufactured to contain radium.

(f) The licensee shall immediately withdraw a leaking sealed source from use and shall take action to prevent the spread of contamination. The leaking sealed source shall be repaired or disposed of in accordance with this Part.

(g) Reports of test results for leaking or contaminated sealed sources shall be made pursuant to A.5.19.

A.3.2 **General Survey and Monitoring Requirements.**

(a) Each licensee or registrant shall make, or cause to be made, surveys that:

(1) Are necessary for the licensee or registrant to comply with this Part; and

(2) Are reasonable under the circumstances to evaluate the magnitude and extent of radiation levels, concentrations or quantities of radioactive material, and the potential radiological hazards.

(b) The licensee or registrant shall ensure that instruments and equipment used for quantitative radiation measurements, for example, dose rate and effluent monitoring, are calibrated at intervals not to exceed 12 months for the radiation measured, unless a different calibration interval is specified in the appropriate Part(s) of these regulations.

(c) All personnel dosimeters, except for direct and indirect reading pocket ionization chambers and those dosimeters used to measure the dose to any extremity, that require processing to determine the radiation dose and that are used by licensees and registrants to comply with A.2.3, with other applicable provisions, or with conditions specified in a license or registration shall be processed and evaluated by a dosimetry processor:

(1) Holding current personnel dosimetry accreditation from the National Voluntary

Laboratory Accreditation Program (NVLAP) of the National Institute of Standards and Technology; and

(2) Approved in this accreditation process for the type of radiation or radiations included in the NVLAP program that most closely approximates the type of radiation or radiations for which the individual wearing the dosimeter is monitored.

(d) Exposure of a personnel monitoring device to deceptively indicate a dose delivered to an individual is prohibited.

A.3.3 **Conditions Requiring Individual Monitoring of External and Internal Occupational Dose.**

Each licensee or registrant shall monitor exposures from sources of radiation at levels sufficient to demonstrate compliance with the occupational dose limits of this Part. As a minimum:

(a) Each licensee or registrant shall monitor occupational exposure to radiation from licensed, registered, unlicensed and unregistered radiation sources under the control of the licensee or registrant and shall supply and require the use of individual monitoring devices by:

(1) Adults likely to receive, in 1 year from sources external to the body, a dose in excess of 10 percent of the limits in A.2.3(a); and

(2) Minors likely to receive, in 1 year, from radiation sources external to the body, a deep dose equivalent in excess of 1 mSv (0.1 rem), a lens dose equivalent in excess of 1.5 mSv (0.15 rem), or a shallow dose equivalent to the skin or to the extremities in excess of 5 mSv (0.5 rem).

(3) Declared pregnant women likely to receive during the entire pregnancy, from radiation sources external to the body, a deep dose equivalent in excess of 1 mSv (0.1 rem)[5]; and

(4) Individuals entering a high or very high radiation area; and

(b) Each licensee or registrant shall monitor, to determine compliance with A.2.6, the occupational intake of radioactive material by and assess the committed effective dose equivalent to:

(1) Adults likely to receive, in 1 year, an intake in excess of 10 percent of the applicable ALI in Table I, Columns 1 and 2, of Appendix B to this Part; and

(2) Minors likely to receive, in 1 year, a committed effective dose equivalent in excess of 1 mSv (0.1 rem); and

(3) Declared pregnant women likely to receive, during the entire pregnancy, a committed effective dose equivalent in excess of 1 mSv (0.1 rem).

(c) Individuals wearing a protective apron, when personnel monitoring is otherwise required by these regulations, shall position their individual monitoring devices as follows:

(1) An individual monitoring device used for the dose to an embryo/fetus of a declared pregnant woman, pursuant to A.2.10(a), shall be located under the protective apron at the waist[6].

---

[5] A... S... A. ... ...

(2) An individual monitoring device used for eye dose equivalent shall be located at the neck, or an unshielded location closer to the eye, outside the protective apron.

A.3.3(c)(3)

(3) When only one individual monitoring device is used to determine the effective dose equivalent for external radiation pursuant to A.2.3(c)(2), it shall be located at the neck outside the protective apron. When a second individual monitoring device is used, for the same purpose, it shall be located under the protective apron at the waist. The second individual monitoring device is required for a declared pregnant woman.

A.3.4 **Control of Access to High Radiation Areas.**

(a) The licensee or registrant shall ensure that each entrance or access point to a high radiation area has one or more of the following features:

(1) A control device that, upon entry into the area, causes the level of radiation to be reduced below that level at which an individual might receive a deep dose equivalent of 1 mSv (0.1 rem) in 1 hour at 30 centimeters from the source of radiation from any surface that the radiation penetrates; or

(2) A control device that energizes a conspicuous visible or audible alarm signal so that the individual entering the high radiation area and the supervisor of the activity are made aware of the entry; or

(3) Entryways that are locked, except during periods when access to the areas is required, with positive control over each individual entry.

(b) In place of the controls required by A.3.4(a) for a high radiation area, the licensee or registrant may substitute continuous direct or electronic surveillance that is capable of preventing unauthorized entry.

(c) The licensee or registrant may apply to the Agency for approval of alternative methods for controlling access to high radiation areas.

(d) The licensee or registrant shall establish the controls required by A.3.4(a) and (c) in a way that does not prevent individuals from leaving a high radiation area.

(e) The licensee is not required to control each entrance or access point to a room or other area that is a high radiation area solely because of the presence of radioactive materials prepared for transport and packaged and labeled in accordance with the regulations of the U.S. Department of Transportation provided that:

(1) The packages do not remain in the area longer than 3 days; and

(2) The dose rate at 1 meter from the external surface of any package does not exceed 0.1 mSv (0.01 rem) per hour.

(f) The licensee is not required to control entrance or access to rooms or other areas in hospitals solely because of the presence of patients containing radioactive material, provided that there are personnel in attendance who are taking the necessary precautions to prevent the exposure of individuals to radiation or radioactive material in excess of the established limits in this Part and to operate within the ALARA provisions of the licensee's radiation protection program.

(g) The registrant is not required to control entrance or access to rooms or other areas containing sources of radiation capable of producing a high radiation area as described in A.3.4 if the registrant has met all the specific requirements for access and control specified in other applicable Parts. (e.g. Part E for industrial radiography, Part F for x-rays in the healing arts, and Part D for particle accelerators.)

A.3.5 **Control of Access to Very High Radiation Areas.**

(a) In addition to the requirements in A.3.4, the licensee or registrant shall institute measures to ensure that an individual is not able to gain unauthorized or inadvertent access to areas in which

radiation levels could be encountered at 5 Gy (500 rad) or more in 1 hour at 1 meter from a source of radiation or any surface through which the radiation penetrates. This requirement does not apply to rooms or areas in which diagnostic x-ray systems are the only source of radiation, or to non-self-shielded irradiators.

A.3.5(b)

(b) The registrant is not required to control entrance or access to rooms or other areas containing sources of radiation capable of producing a very high radiation area as described in A.3.5(a) if the registrant has met all the specific requirements for access and control specified in other applicable Parts. (e.g. Part E for industrial radiography, Part F for x rays in the healing arts, and Part D for particle accelerators.)

A.3.6 **Control of Access to Very High Radiation Areas -- Irradiators.**

(a) Section A.3.6 applies to licensees or registrants with sources of radiation in non-self-shielded irradiators. Section A.3.6 does not apply to sources of radiation that are used in teletherapy/radiotherapy, in industrial radiography, or in completely self-shielded irradiators in which the source of radiation is both stored and operated within the same shielding radiation barrier and, in the designed configuration of the irradiator, is always physically inaccessible to any individual and cannot create high levels of radiation in an area that is accessible to any individual.

(b) Each area in which there may exist radiation levels in excess of 5 Gy (500 rad) in 1 hour at 1 meter from a source of radiation that is used to irradiate materials shall meet the following requirements:

(1) Each entrance or access point shall be equipped with entry control devices which:

(i) Function automatically to prevent any individual from inadvertently entering a very high radiation area; and

(ii) Permit deliberate entry into the area only after a control device is actuated that causes the radiation level within the area, from the source of radiation, to be reduced below that at which it would be possible for an individual to receive a deep dose equivalent in excess of 1 mSv (0.1 rem) in 1 hour; and

(iii) Prevent operation of the source of radiation if it would produce radiation levels in the area that could result in a deep dose equivalent to an individual in excess of 1 mSv (0.1 rem) in 1 hour.

(2) Additional control devices shall be provided so that, upon failure of the entry control devices to function as required by A.3.6(b)(1):

(i) The radiation level within the area, from the source of radiation, is reduced below that at which it would be possible for an individual to receive a deep dose equivalent in excess of 1 mSv (0.1 rem) in 1 hour; and

(ii) Conspicuous visible and audible alarm signals are generated to make an individual attempting to enter the area aware of the hazard and at least one other authorized individual, who is physically present, familiar with the activity, and prepared to render or summon assistance, aware of the failure of the entry control devices.

(3) The licensee or registrant shall provide control devices so that, upon failure or removal of physical radiation barriers other than the sealed source's shielded storage container:

(i) The radiation level from the source of radiation is reduced below that at which it would be possible for an individual to receive a deep dose equivalent in excess of 1 mSv (0.1 rem) in 1 hour; and

(ii) Conspicuous visible and audible alarm signals are generated to make potentially affected individuals aware of the hazard and the licensee or registrant or at least one other individual, who is familiar with the activity and prepared to render or summon assistance, aware of the failure or removal of the physical barrier.

(4) When the shield for stored sealed sources is a liquid, the licensee or registrant shall provide means to monitor the integrity of the shield and to signal, automatically, loss of adequate shielding.

(5) Physical radiation barriers that comprise permanent structural components, such as walls, that have no credible probability of failure or removal in ordinary circumstances need not meet the requirements of Subparagraphs A.3.6(b)(3) and (b)(4).

(6) Each area shall be equipped with devices that will automatically generate conspicuous visible and audible alarm signals to alert personnel in the area before the source of radiation can be put into operation and in time for any individual in the area to operate a clearly identified control device, which must be installed in the area and which can prevent the source of radiation from being put into operation.

(7) Each area shall be controlled by use of such administrative procedures and such devices as are necessary to ensure that the area is cleared of personnel prior to each use of the source of radiation.

(8) Each area shall be checked by a radiation measurement to ensure that, prior to the first individual's entry into the area after any use of the source of radiation, the radiation level from the source of radiation in the area is below that at which it would be possible for an individual to receive a deep dose equivalent in excess of 1 mSv (0.1 rem) in 1 hour.

(9) The entry control devices required in A.3.6(b)(1) shall be tested for proper functioning. [See A.5.10 for recordkeeping requirements.]

(i) Testing shall be conducted prior to initial operation with the source of radiation on any day, unless operations were continued uninterrupted from the previous day; and

(ii) Testing shall be conducted prior to resumption of operation of the source of radiation after any unintentional interruption; and

(iii) The licensee or registrant shall submit and adhere to a schedule for periodic tests of the entry control and warning systems.

(10) The licensee or registrant shall not conduct operations, other than those necessary to place the source of radiation in safe condition or to effect repairs on controls, unless control devices are functioning properly.

(11) Entry and exit portals that are used in transporting materials to and from the irradiation area, and that are not intended for use by individuals, shall be controlled by such devices and administrative procedures as are necessary to physically protect and warn against inadvertent entry by any individual through these portals. Exit portals for irradiated materials shall be equipped to detect and signal the presence of any loose radioactive material that is carried toward such an exit and automatically to prevent loose radioactive material from being carried out of the area.

(c) Licensees, registrants, or applicants for licenses or registrations for sources of radiation within the purview of A.3.6(b) which will be used in a variety of positions or in locations, such as open fields or forests, that make it impracticable to comply with certain requirements of A.3.6(b), such as those for the automatic control of radiation levels, may apply to the Agency for approval of alternative safety measures. Alternative safety measures shall provide personnel protection at least equivalent to those specified in A.3.6(b). At least one of the alternative measures shall include an entry-preventing interlock control based on a measurement of the radiation that ensures the absence of high radiation levels before an individual can gain access to the area where such sources of radiation are used.

(d) The entry control devices required by A.3.6(b) and (c) shall be established in such a way that no individual will be prevented from leaving the area.

A.3.7 **Use of Process or Other Engineering Controls.** The licensee or registrant shall use, to the extent practicable, process or other engineering controls, such as, containment or ventilation, to control the concentrations of radioactive material in air.

A.3.8 **Use of Other Controls.** When it is not practicable to apply process or other engineering controls to control the concentrations of radioactive material in air to values below those that define an airborne radioactivity area, the licensee or registrant shall, consistent with maintaining the total effective dose equivalent ALARA, increase monitoring and limit intakes by one or more of the

following means:

(a) Control of access; or

(b) Limitation of exposure times; or

(c) Use of respiratory protection equipment; or

(d) Other controls.

A.3.9 **Use of Individual Respiratory Protection Equipment.**

(a) If the licensee or registrant uses respiratory protection equipment to limit intakes pursuant to A.3.8:

(1) Except as provided in A.3.9(a)(2), the licensee or registrant shall use only respiratory protection equipment that is tested and certified or had certification extended by the National Institute for Occupational Safety and Health and the Mine Safety and Health Administration.

(2) If the licensee or registrant wishes to use equipment that has not been tested or certified by the National Institute for Occupational Safety and Health and the Mine Safety and Health Administration has not had certification extended by the National Institute for Occupational Safety and Health and the Mine Safety and Health Administration, or for which there is no schedule for testing or certification, the licensee or registrant shall submit an application for authorized use of that equipment, including a demonstration by testing, or a demonstration on the basis of reliable test information, that the material and performance characteristics of the equipment are capable of providing the proposed degree of protection under anticipated conditions of use.

(3) The licensee or registrant shall implement and maintain a respiratory protection program that includes:

(i) Air sampling sufficient to identify the potential hazard, permit proper equipment selection, and estimate exposures; and

(ii) Surveys and bioassays, as appropriate, to evaluate actual intakes; and

(iii) Testing of respirators for operability immediately prior to each use; and

(iv) Written procedures regarding selection, fitting, issuance, maintenance, and testing of respirators, including testing for operability immediately prior to each use; supervision and training of personnel; monitoring, including air sampling and bioassays; and recordkeeping; and

(v) Determination by a physician prior to the initial fitting of respirators, and either every 12 months thereafter or periodically at a frequency determined by a physician, that the individual user is medically fit to use the respiratory protection equipment.

(4) The licensee or registrant shall issue a written policy statement on respirator usage covering:

(i) The use of process or other engineering controls, instead of respirators; and

(ii) The routine, nonroutine, and emergency use of respirators; and

(iii) The length of periods of respirator use and relief from respirator use.

(5) The licensee or registrant shall advise each respirator user that the user may leave the area at any time for relief from respirator use in the event of equipment malfunction, physical or psychological distress, procedural or communication failure, significant deterioration of operating conditions, or any other conditions that might require such relief.

(6) The licensee or registrant shall use respiratory protection equipment within the equipment manufacturer's expressed limitations for type and mode of use and shall provide proper visual, communication, and other special capabilities, such as adequate skin protection, when needed.

(b) When estimating exposure of individuals to airborne radioactive materials, the licensee or registrant may make allowance for respiratory protection equipment used to limit intakes pursuant to A.3.8, provided that the following conditions, in addition to those in A.3.9(a), are satisfied:

(1) The licensee or registrant selects respiratory protection equipment that provides a protection factor, specified in Appendix A to this Part, greater than the multiple by which peak concentrations of airborne radioactive materials in the working area are expected to exceed the values specified in Table I, Column 3 of Appendix B to this Part. However, if the selection of respiratory protection equipment with a protection factor greater than the peak concentration is inconsistent with the goal specified in A.3.8 of keeping the total effective dose equivalent ALARA, the licensee or registrant may select respiratory protection equipment with a lower protection factor provided that such a selection would result in a total effective dose equivalent that is ALARA. The concentration of radioactive material in the air that is inhaled when respirators are worn may be initially estimated by dividing the average concentration in air, during each period of uninterrupted use, by the protection factor. If the exposure is later found to be greater than initially estimated, the corrected value shall be used; if the exposure is later found to be less than initially estimated, the corrected value may be used.

(2) The licensee or registrant shall obtain authorization from the Agency before assigning respiratory protection factors in excess of those specified in Appendix A to this Part. The Agency may authorize a licensee or registrant to use higher protection factors on receipt of an application that:

(i) Describes the situation for which a need exists for higher protection factors, and

(ii) Demonstrates that the respiratory protection equipment provides these higher protection factors under the proposed conditions of use.

(c) In an emergency, the licensee or registrant shall use as emergency equipment only respiratory protection equipment that has been specifically certified or had certification extended for emergency use by the National Institute for Occupational Safety and Health and the Mine Safety and Health Administration.

(d) The licensee or registrant shall notify the Agency in writing at least 30 days before the date that respiratory protection equipment is first used pursuant to either A.3.9(a) or (b).

A.3.10 **Security of Stored Sources of Radiation.** The licensee or registrant shall secure from unauthorized removal or access licensed or registered sources of radiation that are stored in unrestricted areas.

A.3.11 **Control of Sources of Radiation not in Storage.**

(a) The licensee shall control and maintain constant surveillance of licensed radioactive material that is in an unrestricted area and that is not in storage.

(b) The registrant shall maintain control of radiation machines that are in an unrestricted area and that are not in storage.

A.3.12 **Caution Signs.**

(a) **Standard Radiation Symbol.** Unless otherwise authorized by the Agency, the symbol prescribed by A.3.12 shall use the colors magenta, or purple, or black on yellow background. The symbol prescribed is the three-bladed design as follows:

AYYY

A.3.12(a)

RADIATION SYMBOL

1. Cross-hatched area is to be magenta, or purple, or black, and
2. The background is to be yellow.

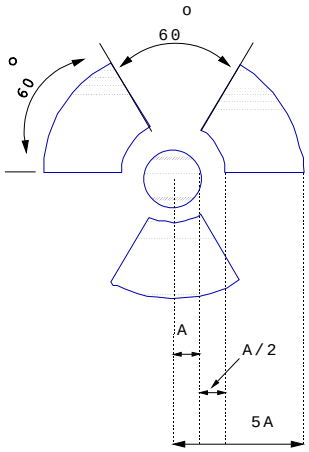

(b) **Exception to Color Requirements for Standard Radiation Symbol.** Notwithstanding the requirements of A.3.12(a), licensees or registrants are authorized to label sources, source holders, or device components containing sources of radiation that are subjected to high temperatures, with conspicuously etched or stamped radiation caution symbols and without a color requirement.

(c) **Additional Information on Signs and Labels.** In addition to the contents of signs and labels prescribed in Part A, the licensee or registrant shall provide, on or near the required signs and labels, additional information, as appropriate, to make individuals aware of potential radiation exposures and to minimize the exposures.

A.3.13 **Posting Requirements.**

(a) **Posting of Radiation Areas.** The licensee or registrant shall post each radiation area with a conspicuous sign or signs bearing the radiation symbol and the words "**CAUTION, RADIATION AREA**".

(b) **Posting of High Radiation Areas.** The licensee or registrant shall post each high radiation area with a conspicuous sign or signs bearing the radiation symbol and the words "**CAUTION, HIGH RADIATION AREA**" or "**DANGER, HIGH RADIATION AREA**".

(c) **Posting of Very High Radiation Areas.** The licensee or registrant shall post each very high radiation area with a conspicuous sign or signs bearing the radiation symbol and words "**GRAVE DANGER, VERY HIGH RADIATION AREA**".

(d) **Posting of Airborne Radioactivity Areas.** The licensee or registrant shall post each airborne radioactivity area with a conspicuous sign or signs bearing the radiation symbol and the words "**CAUTION, AIRBORNE RADIOACTIVITY AREA**" or "**DANGER, AIRBORNE RADIOACTIVITY AREA**".

(e) **Posting of Areas or Rooms in which Licensed Material is Used or Stored.** The licensee shall post each area or room in which there is used or stored an amount of licensed material exceeding 10 times the quantity of such material specified in Appendix C to this Part with a conspicuous sign or signs bearing the radiation symbol and the words "**CAUTION, RADIOACTIVE MATERIAL(S)**" or "**DANGER, RADIOACTIVE MATERIAL(S)**".

A.3.14 **Exceptions to Posting Requirements.**

(a) A licensee or registrant is not required to post caution signs in areas or rooms containing sources of radiation for periods of less than 8 hours, if each of the following conditions is met:

A.3.14(a)(1)

(1) The sources of radiation are constantly attended during these periods by an individual who takes the precautions necessary to prevent the exposure of individuals to sources of radiation in excess of the limits established in this Part; and

(2) The area or room is subject to the licensee's or registrant's control.

(b) Rooms or other areas in hospitals that are occupied by patients are not required to be posted with caution signs pursuant to A.3.13 provided that the patient could be released from licensee control pursuant to C.8.24.

(c) A room or area is not required to be posted with a caution sign because of the presence of a sealed source provided the radiation level at 30 centimeters from the surface of the sealed source container or housing does not exceed 0.05 mSv (0.005 rem) per hour.

(d) A room or area is not required to be posted with a caution sign because of the presence of radiation machines used solely for diagnosis in the healing arts.

(e) A licensee or registrant is not required to post caution signs in rooms in hospitals or clinics that are used for teletherapy or external beam radiation therapy, if each of the following conditions is met:

(1) Access to the room is controlled pursuant to C.8.50; and

(2) Personnel in attendance take necessary precautions to prevent the inadvertent exposure of workers, other patients, and members of the public to radiation in excess of the limits established in this Part.

A.3.15 **Labeling Containers and Radiation Machines.**

(a) The licensee shall ensure that each container of licensed material bears a durable, clearly visible label bearing the radiation symbol and the words "**CAUTION, RADIOACTIVE MATERIAL**" or "**DANGER, RADIOACTIVE MATERIAL**". The label shall also provide information, such as the radionuclides present, an estimate of the quantity of radioactivity, the date for which the activity is estimated, radiation levels, kinds of materials, and mass enrichment, to permit individuals handling or using the containers, or working in the vicinity of the containers, to take precautions to avoid or minimize exposures.

(b) Each licensee shall, prior to removal or disposal of empty uncontaminated containers to unrestricted areas, remove or deface the radioactive material label or otherwise clearly indicate that the container no longer contains radioactive materials.

(c) Each registrant shall ensure that each radiation machine is labeled in a conspicuous manner which cautions individuals that radiation is produced when it is energized.

A.3.16 **Exemptions to Labeling Requirements.** A licensee is not required to label:

(a) Containers holding licensed material in quantities less than the quantities listed in Appendix C; or

(b) Containers holding licensed material in concentrations less than those specified in Table III of Appendix B to this Part; or

(c) Containers attended by an individual who takes the precautions necessary to prevent the exposure of individuals in excess of the limits established by this Part; or

(d) Containers when they are in transport and packaged and labeled in accordance with the

regulations of the U.S. Department of Transportation;[7] or

---

[7] L. . . .. S. .D... . . . . T. . . . . S. .D... . . . . T. . . . . CFR . . . . . .

(e) Containers that are accessible only to individuals authorized to handle or use them, or to work in the vicinity of the containers, if the contents are identified to these individuals by a readily available written record. Examples of containers of this type are containers in locations such as water-filled canals, storage vaults, or hot cells. The record shall be retained as long as the containers are in use for the purpose indicated on the record; or

(f) Installed manufacturing or process equipment, such as piping and tanks.

A.3.17 **Procedures for Receiving and Opening Packages.**

(a) Each licensee who expects to receive a package containing quantities of radioactive material in excess of a Type A quantity, as defined in Table A-1 of 10 CFR 71, shall make arrangements to receive:

(1) The package when the carrier offers it for delivery; or

(2) The notification of the arrival of the package at the carrier's terminal and to take possession of the package expeditiously.

(b) Each licensee shall:

(1) Monitor the external surfaces of a labeled[8] package for radioactive contamination unless the package contains only radioactive material in the form of gas or in special form as defined in A.0; and

(2) Monitor the external surfaces of a labeled[8] package for radiation levels unless the package contains quantities of radioactive material that are less than or equal to the Type A quantity, as defined in Table A-1 of 10 CFR 71; and

(3) Monitor all packages known to contain radioactive material for radioactive contamination and radiation levels if there is evidence of degradation of package integrity, such as packages that are crushed, wet, or damaged.

(c) The licensee shall perform the monitoring required by A.3.17(b) as soon as practicable after receipt of the package, but not later than 3 hours after the package is received at the licensee's or registrant's facility if it is received during the licensee's or registrant's normal working hours, or not later than 3 hours from the beginning of the next working day if it is received after working hours.

(d) The licensee shall immediately notify the final delivery carrier and, by telephone and telegram, mailgram, or facsimile, the Agency when:

(1) Removable radioactive surface contamination exceeds the limits contained in Appendix G to this Part; or

(2) External radiation levels exceed the limits contained in Appendix G to this Part.

(e) Each licensee shall:

(1) Establish, maintain, and retain written procedures for safely opening packages in which radioactive material is received; and

(2) Ensure that the procedures are followed and that due consideration is given to special instructions for the type of package being opened.

(f) Licensees transferring special form sources in vehicles owned or operated by the licensee to and from a work site are exempt from the contamination monitoring requirements of A.3.17(b), but are not exempt from the monitoring requirement in A.3.17(b) for measuring radiation levels that

---

[8] L. . . .. R. . .. . I. . . .. . II. . . . . III .. . . S. .D... . . . . T. . . . . CFR . . . .

ensures that the source is still properly lodged in its shield.

A.4 WASTE DISPOSAL

A.4.1 **General Requirements.**

(a) A licensee shall dispose of licensed material only:

(1) By transfer to an authorized recipient as provided in A.4.6, Part C, or to the U.S. Department of Energy; or

(2) By decay in storage; or

(3) By release in effluents within the limits in A.2.11; or

(4) As authorized pursuant to A.4.2, A.4.3, A.4.4, or A.4.5.

(b) A person shall be specifically licensed to receive waste containing licensed material from other persons for:

(1) Treatment prior to disposal; or

(2) Treatment or disposal by incineration; or

(3) Decay in storage; or

(4) Disposal at a land disposal facility licensed pursuant to 10 CFR 61 or the equivalent regulations of an Agreement State or Licensing State; or

(5) Storage until transferred to a storage or disposal facility authorized to receive the waste.

A.4.2 **Method for Obtaining Approval of Proposed Disposal Procedures.** A licensee or applicant for a license may apply to the Agency for approval of proposed procedures, not otherwise authorized in these regulations, to dispose of licensed material generated in the licensee's operations. Each application shall include:

(a) A description of the waste containing licensed material to be disposed of, including the physical and chemical properties that have an impact on risk evaluation, and the proposed manner and conditions of waste disposal; and

(b) An analysis and evaluation of pertinent information on the nature of the environment; and

(c) The nature and location of other potentially affected facilities; and

(d) Analyses and procedures to ensure that doses are maintained ALARA and within the dose limits in this Part.

A.4.3 **Disposal by Release into Sanitary Sewerage.**

(a) A licensee may discharge licensed material into sanitary sewerage if each of the following conditions is satisfied:

(1) The material is readily soluble, or is readily dispersible biological material, in water; and

(2) The quantity of licensed radioactive material that the licensee releases into the sewer in 1 month divided by the average monthly volume of water released into the sewer by the licensee does not exceed the concentration listed in Table III of Appendix B to this Part; and

(3) If more than one radionuclide is released, the following conditions must also be satisfied:

AYYY

A.4.3(a)(3)(i)

(i) The licensee shall determine the fraction of the limit in Table III of Appendix B to this Part represented by discharges into sanitary sewerage by dividing the actual monthly average concentration of each radionuclide released by the licensee into the sewer by the concentration of that radionuclide listed in Table III of Appendix B to this Part; and

(ii) The sum of the fractions for each radionuclide required by A.4.3(a)(3)(i) does not exceed unity; and

(4) The total quantity of licensed radioactive material that the licensee releases into the sanitary sewerage in a year does not exceed 185 GBq (5 Ci) of hydrogen-3, 37 GBq (1 Ci) of carbon-14, and 37 GBq (1 Ci) of all other radioactive materials combined.

(b) Excreta from individuals undergoing medical diagnosis or therapy with radioactive material are not subject to the limitations contained in A.4.3(a).

A.4.4 **Treatment or Disposal by Incineration.** A licensee may treat or dispose of licensed material by incineration only in the amounts and forms specified in A.4.5 or as specifically approved by the Agency pursuant to A.4.2.

A.4.5 **Disposal of Specific Wastes.**

(a) A licensee may dispose of the following licensed material as if it were not radioactive:

(1) 1.85 kBq (0.05 μCi), or less, of hydrogen-3 or carbon-14 per gram of medium used for liquid scintillation counting; and

(2) 1.85 kBq (0.05 μCi), or less, of hydrogen-3 or carbon-14 per gram of animal tissue, averaged over the weight of the entire animal.

(b) A licensee shall not dispose of tissue pursuant to A.4.5(a)(2) in a manner that would permit its use either as food for humans or as animal feed.

(c) The licensee shall maintain records in accordance with A.5.9.

A.4.6 **Transfer for Disposal and Manifests.**

(a) The requirements of A.4.6 and Appendix D to this part are designed to:

(1) Control transfers of low-level radioactive waste by any waste generator, waste collector, or waste processor licensee, as defined in this Part, who ships low-level waste either directly, or indirectly through a waste collector or waste processor, to a licensed low-level waste land disposal facility;

(2) Establish a manifest tracking system; and

(3) Supplement existing requirements concerning transfers and record keeping for those wastes.

(b) Any licensee shipping radioactive waste intended for ultimate disposal at a licensed land disposal facility must document the information required on NRC"s Uniform Low-Level Radioactive Waste Manifest and transfer this recorded manifest information to the intended consignee in accordance with Appendix D to this Part.

(c) Each shipment manifest shall include a certification by the waste generator as specified in Section II of Appendix D to this Part.

(d) Each person involved in the transfer of waste for disposal or in the disposal of waste, including the waste generator, waste collector, waste processor, and disposal facility operator, shall comply with the requirements specified in Section III of Appendix D to this Part.

AYYY

A.4.7 **Compliance with Environmental and Health Protection Regulations.** Nothing in this Subpart relieves the licensee from complying with other applicable Federal, State and local regulations governing any other toxic or hazardous properties of materials that may be disposed of pursuant to this Subpart.

A.5 RECORDS, REPORTS AND ADDITIONAL REQUIREMENTS

A.5.1 **General Provisions.**

(a) Each licensee or registrant shall use the SI units becquerel, gray, sievert and coulomb per kilogram, or the special units curie, rad, rem and roentgen, including multiples and subdivisions, and shall clearly indicate the units of all quantities on records required by this Part.

(b) The licensee or registrant shall make a clear distinction among the quantities entered on the records required by this Part (e.g., total effective dose equivalent, shallow dose equivalent, lens dose equivalent, deep dose equivalent, committed effective dose equivalent).

A.5.2 **Records of Radiation Protection Programs.**

(a) Each licensee or registrant shall maintain records of the radiation protection program, including:

(1) The provisions of the program; and

(2) Audits and other reviews of program content and implementation.

(b) The licensee or registrant shall retain the records required by A.5.2(a)(1) until the Agency terminates each pertinent license or registration requiring the record. The licensee or registrant shall retain the records required by A.5.2(a)(2) for 3 years after the record is made.

A.5.3 **Records of Surveys.**

(a) Each licensee or registrant shall maintain records showing the results of surveys and calibrations required by A.3.2 and A.3.17(b). The licensee or registrant shall retain these records for 3 years after the record is made.

(b) The licensee or registrant shall retain each of the following records until the Agency terminates each pertinent license or registration requiring the record:

(1) Records of the results of surveys to determine the dose from external sources of radiation used, in the absence of or in combination with individual monitoring data, in the assessment of individual dose equivalents; and

(2) Records of the results of measurements and calculations used to determine individual intakes of radioactive material and used in the assessment of internal dose; and

(3) Records showing the results of air sampling, surveys, and bioassays required pursuant to Subparagraphs A.3.9(a)(3)(i) and (a)(3)(ii); and

(4) Records of the results of measurements and calculations used to evaluate the release of radioactive effluents to the environment.

(c) Upon termination of the license or registration, the licensee or registrant shall make arrangements, satisfactory to the Agency, for permanent storage of records contained on Agency Form RCA-2 or equivalent.

A.5.4 **Records of Tests for Leakage or Contamination of Sealed Sources.** Records of tests for leakage or contamination of sealed sources required by A.3.1 shall be kept in units of becquerel or

microcurie and maintained for inspection by the Agency for 5 years after the records are made.

A.5.5 **Records of Prior Occupational Dose.**

(a) The licensee or registrant shall retain the records of prior occupational dose and exposure history as specified in A.2.7 on Agency Form RCA-2 or equivalent until the Agency terminates each pertinent license or registration requiring this record. The licensee or registrant shall retain records used in preparing Agency Form RCA-2 or equivalent for 3 years after the record is made.

(b) Upon termination of the license or registration, the licensee or registrant shall make arrangements, satisfactory to the Agency, for permanent storage of records contained on Agency Form RCA-2 or equivalent.

A.5.6 **Records of Planned Special Exposures.**

(a) For each use of the provisions of A.2.8 for planned special exposures, the licensee or registrant shall maintain records that describe:

(1) The exceptional circumstances requiring the use of a planned special exposure; and

(2) The name of the management official who authorized the planned special exposure and a copy of the signed authorization; and

(3) What actions were necessary; and

(4) Why the actions were necessary; and

(5) What precautions were taken to assure that doses were maintained ALARA; and

(6) What individual and collective doses were expected to result; and

(7) The doses actually received in the planned special exposure.

(b) The licensee or registrant shall retain the records until the Agency terminates each pertinent license or registration requiring these records.

(c) Upon termination of the license or registration, the licensee or registrant shall make arrangements, satisfactory to the Agency, for permanent storage of records contained on Agency Form RCA-2 or equivalent.

A.5.7 **Records of Individual Monitoring Results.**

(a) **Recordkeeping Requirement.** Each licensee or registrant shall maintain records of doses received by all individuals for whom monitoring was required pursuant to A.3.3, and records of doses received during planned special exposures, accidents, and emergency conditions. Assessments of dose equivalent and records made using units in effect before 1 January 1994 need not be changed. These records shall include, when applicable:

(1) The deep dose equivalent to the whole body, lens dose equivalent, shallow dose equivalent to the skin, and shallow dose equivalent to the extremities; and

(2) The estimated intake of radionuclides [See A.2.4]; and

(3) The committed effective dose equivalent assigned to the intake of radionuclides; and

(4) The specific information used to assess the committed effective dose equivalent pursuant to A.2.6(a) and (c), and when required by A.3.3; and

(5)The total effective dose equivalent when required by A.2.4; and

(6) The total of the deep dose equivalent and the committed dose to the organ receiving the highest total dose.

(b) **Recordkeeping Frequency.** The licensee or registrant shall make entries of the records specified in A.5.7(a) at intervals not to exceed 1 year.

(c) **Recordkeeping Format.** The licensee or registrant shall maintain the records specified in A.5.7(a) on Agency Form RCA-3, in accordance with the instructions for Agency Form RCA-3, or in clear and legible records containing all the information required by Agency Form RCA-3.

(d) The licensee or registrant shall maintain the records of dose to an embryo/fetus with the records of dose to the declared pregnant woman. The declaration of pregnancy, including the estimated date of conception, shall also be kept on file, but may be maintained separately from the dose records.

(e) The licensee or registrant shall retain each required form or record until the Agency terminates each pertinent license or registration requiring the record.

(f) Upon termination of the license or registration, the licensee or registrant shall make arrangements, satisfactory to the Agency, for permanent storage of records contained on Agency Form RCA-2 or equivalent.

A.5.8 **Records of Dose to Individual Members of the Public.**

(a) Each licensee or registrant shall maintain records sufficient to demonstrate compliance with the dose limit for individual members of the public. [See A.2.11.]

(b) The licensee or registrant shall retain the records required by A.5.8(a) until the Agency terminates each pertinent license or registration requiring the record.

A.5.9 **Records of Waste Disposal.**

(a) Each licensee shall maintain records of the disposal of licensed materials made pursuant to A.4.2, A.4.3, A.4.4, A.4.5, and disposal by burial in soil, including burials authorized before 1 June 1981[9].

(b) The licensee shall retain the records required by A.5.9(a) until the Agency terminates each pertinent license requiring the record.

A.5.10 **Records of Testing Entry Control Devices for Very High Radiation Areas.**

(a) Each licensee or registrant shall maintain records of tests made pursuant to A.3.6(b)(9) on entry control devices for very high radiation areas. These records must include the date, time, and results of each such test of function.

(b) The licensee or registrant shall retain the records required by A.5.10(a) for 3 years after the record is made.

A.5.11 **Form of Records.** Each record required by this Part shall be legible throughout the specified retention period. The record shall be the original or a reproduced copy or a microform, provided that the copy or microform is authenticated by authorized personnel and that the microform is capable of producing a clear copy throughout the required retention period or the record may also be stored in electronic media with the capability for producing legible, accurate, and complete records during the required retention period. Records, such as letters, drawings, and specifications, shall include all pertinent information, such as stamps, initials, and signatures. The licensee shall maintain adequate safeguards against tampering with and loss of records.

---

[9] A. A.

A.5.12 **Reports of Stolen, Lost, or Missing Licensed or Registered Sources of Radiation.**

(a) **Telephone Reports.** Each licensee or registrant shall report to the Agency by telephone as follows:

(1) Immediately after its occurrence becomes known to the licensee, stolen, lost, or missing licensed radioactive material in an aggregate quantity equal to or greater than 1,000 times the quantity specified in Appendix C to this Part under such circumstances that it appears to the licensee that an exposure could result to individuals in unrestricted areas; or

(2) Within 30 days after its occurrence becomes known to the licensee, lost, stolen, or missing licensed radioactive material in an aggregate quantity greater than 10 times the quantity specified in Appendix C to this Part; or

(3) Immediately after its occurrence becomes known to the registrant, a stolen, lost, or missing radiation machine.

(b) **Written Reports.** Each licensee or registrant required to make a report pursuant to A.5.12(a) shall, within 30 days after making the telephone report, make a written report to the Agency setting forth the following information:

(1) A description of the licensed or registered source of radiation involved, including, for radioactive material, the kind, quantity, and chemical and physical form; and, for radiation machines, the manufacturer, model and serial number, type and maximum energy of radiation emitted;

(2) A description of the circumstances under which the loss or theft occurred; and

(3) A statement of disposition, or probable disposition, of the licensed or registered source of radiation involved; and

(4) Exposures of individuals to radiation, circumstances under which the exposures occurred, and the possible total effective dose equivalent to persons in unrestricted areas; and

(5) Actions that have been taken, or will be taken, to recover the source of radiation; and

(6) Procedures or measures that have been, or will be, adopted to ensure against a recurrence of the loss or theft of licensed or registered sources of radiation.

(c) Subsequent to filing the written report, the licensee or registrant shall also report additional substantive information on the loss or theft within 30 days after the licensee or registrant learns of such information.

(d) The licensee or registrant shall prepare any report filed with the Agency pursuant to A.5.12 so that names of individuals who may have received exposure to radiation are stated in a separate and detachable portion of the report.

A.5.13 **Notification of Incidents.**

(a) **Immediate Notification.** Notwithstanding other requirements for notification, each licensee or registrant shall immediately report each event involving a source of radiation possessed by the licensee or registrant that may have caused or threatens to cause any of the following conditions:

(1) Immediately notify the Agency of each event involving a source of radiation possessed by the licensee or registrant that may have caused or threatens to cause any of the following conditions:

(i) An individual to receive:

(a) A total effective dose equivalent of 0.25 Sv (25 rem) or more; or

(b) A lens dose equivalent of 0.75 Sv (75 rem) or more; or

(c) A shallow dose equivalent to the skin or extremities or a total organ dose equivalent of 2.5 Gy (250 rad) or more; or

(ii) The release of radioactive material, inside or outside of a restricted area, so that, had an individual been present for 24 hours, the individual could have received an intake five times the occupational ALI. This provision does not apply to locations where personnel are not normally stationed during routine operations, such as hot-cells or process enclosures.

(2) Immediately notify the Agency as soon as possible, but not later than 4 hours after the discovery, of an event (e.g., fire, explosion toxic gas release, etc.) that prevents immediate protective actions necessary to avoid exposures to radiation or radioactive materials that could exceed regulatory limits or releases of licensed material that could exceed regulatory limits.

(b) **Twenty-Four Hour Notification.** Each licensee or registrant shall, within 24 hours of discovery of the event, report to the Agency each event involving loss of control of a licensed or registered source of radiation possessed by the licensee or registrant that may have caused, or threatens to cause, any of the following conditions:

(1) An individual to receive, in a period of 24 hours:

(i) A total effective dose equivalent exceeding 0.05 Sv (5 rem); or

(ii) A lens dose equivalent exceeding 0.15 Sv (15 rem); or

(iii) A shallow dose equivalent to the skin or extremities or a total organ dose equivalent exceeding 0.5 Sv (50 rem); or

(2) The release of radioactive material, inside or outside of a restricted area, so that, had an individual been present for 24 hours, the individual could have received an intake in excess of one occupational ALI. This provision does not apply to locations where personnel are not normally stationed during routine operations, such as hot-cells or process enclosures.

(3) An unplanned contamination event that:

(i) Requires access to the contaminated area, by workers or the public, to be restricted for more than 24 hours by imposing additional radiological controls or by prohibiting entry into the area; and

(ii) Involves a quantity of material greater than five times the lowest annual limit on intake specified for the material in Appendix B to Part A of these regulations; and

(iii) Has access to the area restricted for a reason other than to allow isotopes with a half-life of less than 24 hours to decay prior to decontamination.

(4) An event in which equipment is disabled or fails to function as designed when:

(i) The equipment is required by regulation or license/registration condition to prevent releases exceeding regulatory limits, to prevent exposures to radiation and/or radioactive materials exceeding regulatory limits, or to mitigate the consequences of an accident; and

(ii) The equipment is required to be available and operable when it is disabled or fails to function; and

(iii) No redundant equipment is available and operable to perform the required safety function.

(5) An event that requires unplanned medical treatment at a medical facility of an individual with spreadable radioactive contamination on the individual's clothing or body.

(6) An unplanned fire or explosion damaging any licensed material or any device, container, or equipment containing licensed material when:

(i) The quantity of material involved is greater than five times the lowest annual limit on intake specified for the material in Appendix B to Part A of these regulations; and

(ii) The damage affects the integrity of the licensed material or its container.

(c) The licensee or registrant shall prepare each report filed with the Agency pursuant to A.5.13 so that names of individuals who have received exposure to sources of radiation are stated in a separate and detachable portion of the report.

(d) Licensees or registrants shall make the reports required by A.5.13(a) and (b) to the Agency by telephone, telegram, mailgram, or facsimile to the Agency. To the extent that the information is available at the time of notification, the information provided in these reports shall include:

(1) The name of the person making the report and their call-back telephone number;

(2) A description of the event, including time and date;

(3) The exact location of the event;

(4) The levels of radiation and the isotopes, quantities, and chemical and physical form of the licensed material involved; and

(5) Any personnel radiation exposure data available.

(e) The provisions of A.5.13 do not apply to doses that result from planned special exposures, provided such doses are within the limits for planned special exposures and are reported pursuant to A.5.15.

A.5.14 **Reports of Exposures, Radiation Levels, and Concentrations of Radioactive Material Exceeding the Limits.**

(a) **Reportable Events.** In addition to the notification required by A.5.13, each licensee or registrant shall submit a written report within 30 days after learning of any of the following occurrences:

(1) Incidents for which notification is required by A.5.13; or

(2) Doses in excess of any of the following:

(i) The occupational dose limits for adults in A.2.3; or

(ii) The occupational dose limits for a minor in A.2.9; or

(iii) The limits for an embryo/fetus of a declared pregnant woman in A.2.10; or

(iv) The limits for an individual member of the public in A.2.11; or

(v) Any applicable limit in the license or registration; or

(3) Levels of radiation or concentrations of radioactive material in:

(i) A restricted area in excess of applicable limits in the license or registration; or

(ii) An unrestricted area in excess of 10 times the applicable limit set forth in Part A or in the license or registration, whether or not involving exposure of any individual in excess of the limits in A.2.11; or

(4) For licensees subject to the provisions of U.S. Environmental Protection Agency's generally applicable environmental radiation standards in 40 CFR 190, levels of radiation or releases of radioactive material in excess of those standards, or of license conditions

related to those standards.

A.5.14(b)

(b) **Contents of Reports.**

(1) Each report required by A.5.14(a) shall describe the extent of exposure of individuals to radiation and radioactive material, including, as appropriate:

(i) Estimates of each individual's dose; and

(ii) The levels of radiation, concentrations of radioactive material, and the isotopes, quantities, and chemical and physical form of the licensed material involved; and

(iii) The cause of the elevated exposures, dose rates, or concentrations; and

(iv) A description of the event including the probable cause and the manufacturer and model number (if applicable) of any equipment that failed or malfunctioned; and

(v) The exact location, date and time of the event; and

(vi) Corrective actions, including the results of any evaluations or assessments, taken or planned to ensure against a recurrence, including the schedule for achieving conformance with applicable limits, generally applicable environmental standards, and associated license or registration conditions.

(2) Each report filed pursuant to A.5.14(a) shall include for each individual exposed: the name, Social Security account number, and date of birth. With respect to the limit for the embryo/fetus in A.2.10, the identifiers should be those of the declared pregnant woman. The report shall be prepared so that this information is stated in a separate and detachable portion of the report.

(c) All licensees or registrants who make reports pursuant to A.5.14(a) shall submit the report in writing to the Agency.

A.5.15 **Reports of Planned Special Exposures.** The licensee or registrant shall submit a written report to the Agency within 30 days following any planned special exposure conducted in accordance with A.2.8, informing the Agency that a planned special exposure was conducted and indicating the date the planned special exposure occurred and the information required by A.5.6.

A.5.16 **[RESERVED]**

A.5.17 **[RESERVED]**

A.5.18 **Notifications and Reports to Individuals.**

(a) Requirements for notification and reports to individuals of exposure to radiation or radioactive material are specified in A.6.4.

(b) When a licensee or registrant is required pursuant to A.5.14 to report to the Agency any exposure of an individual to radiation or radioactive material, the licensee or registrant shall also notify the individual. Such notice shall be transmitted at a time not later than the transmittal to the Agency, and shall comply with the provisions of A.6.4(a).

A.5.19 **Reports of Leaking or Contaminated Sealed Sources.** The licensee or registrant shall file a report within 5 days with the Agency if the test for leakage or contamination required pursuant to A.3.1 indicates a sealed source is leaking or contaminated. The report shall include the equipment involved, the test results and the corrective action taken.

A.5.20 **Vacating Premises.** Each specific licensee or registrant shall, no less than 30 days before vacating or relinquishing possession or control of premises which may have been contaminated with radioactive material as a result of his activities, notify the Agency in writing of intent to vacate. When deemed necessary by the Agency, the licensee shall decontaminate the premises in such a manner as the Agency may specify.

A.6 NOTICES, INSTRUCTIONS AND REPORTS TO WORKERS; INSPECTIONS

A.6.1 **Purpose and Scope.** This subpart establishes requirements for notices, instructions and reports by licensees or registrants to individuals engaged in work under a license or registration and options available to such individuals in connection with Agency inspections of licensees or registrants to ascertain compliance with the provisions of the Act and regulations, orders, licenses and certificates of registration issued thereunder regarding radiological working conditions. The regulations in this subpart apply to all persons who receive, possess, use, own or transfer radiation sources licensed by or registered with the Agency pursuant to these regulations.

A.6.2 **Posting of Notices to Workers.**

(a) Each licensee or registrant shall post current copies of the following documents:

(1) The regulations in this part;

(2) The license, certificate of registration, conditions or documents incorporated into the license by reference and amendments thereto;

(3)The operating procedures applicable to work under the license or registration;

(4) Any notice of violation involving radiological working conditions, proposed imposition of civil penalty, or order issued pursuant to the Act, and any response from the licensee or registrant.

(b) If posting of a document specified in A.6.2(a)(1), (2), or (3) is not practicable, the licensee or registrant may post a notice which describes the document and states where it may be examined.

(c) Agency Form RCA-1 "Notice to Employees" shall be posted by each licensee or registrant as required by these regulations.

(d) Documents, notices or forms posted pursuant to this section shall appear in a sufficient number of places to permit individuals engaged in work under the license or registration to observe them on the way to or from any particular work location to which the document applies, shall be conspicuous, and shall be replaced if defaced or altered.

(e) Agency documents posted pursuant to A.6.2(a)(4) shall be posted within 5 working days after receipt of the documents from the Agency; the licensee's or registrant's response, if any, shall be posted within 2 working days after dispatch from the licensee or registrant. Such documents shall remain posted for a minimum of 5 working days or until action correcting the violation has been completed, whichever is later.

A.6.3 **Instructions to Workers.**

(a) All individuals who in the course of employment are likely to receive an annual occupational dose in excess of 1 mSv (100 mrem) shall be:

(1) Kept informed of the storage, transfer, or use of radiation or radioactive material;

(2) Instructed in the health protection problems associated with exposure to radiation or radioactive material, in precautions or procedures to minimize exposure, and in the

purposes and functions of protective devices employed;

(3) Instructed in, and required to observe, to the extent within the worker's control, the applicable provisions of these regulations and licenses for the protection of personnel from exposures to radiation or radioactive material;

(4) Instructed of their responsibility to report promptly to the licensee or registrant any condition which may constitute, lead to, or cause a violation of the Act, these regulations, and licenses or unnecessary exposure to radiation or radioactive material;

(5) Instructed in the appropriate response to warnings made in the event of any unusual occurrence or malfunction that may involve exposure to radiation or radioactive material; and

(6) Advised as to the radiation exposure reports which workers shall be furnished pursuant to A.6.4.

... I. .... P. ..... A. ... .

A.6.5 **Presence of Representatives of Licenses or Registrants and Workers During Inspection.**

(a) Each licensee or registrant shall afford to the Agency at all reasonable times opportunity to inspect materials, machines, activities, facilities, premises, and records pursuant to these regulations.

(b) During an inspection, Agency inspectors may consult privately with workers as specified in A.6.6. The licensee or registrant may accompany Agency inspectors during other phases of an inspection.

(c) If, at the time of inspection, an individual has been authorized by the workers to represent them during Agency inspections, the licensee or registrant shall notify the inspectors of such authorization and shall give the workers' representative an opportunity to accompany the inspectors during the inspection of physical working conditions.

(d) Each workers' representative shall be routinely engaged in work under control of the licensee or registrant and shall have received instructions as specified in A.6.3.

(e) Different representatives of licensees or registrants and workers may accompany the inspectors during different phases of an inspection if there is no resulting interference with the conduct of the inspection. However, only one workers' representative at a time may accompany the inspectors.

(f) With the approval of the licensee or registrant and the workers' representative, an individual who is not routinely engaged to work under control of the licensee or registrant, for example, a consultant to the licensee or registrant or to the workers' representative, shall be afforded the opportunity to accompany Agency inspectors during the inspection of physical working conditions.

(g) Notwithstanding the other provisions of this section, Agency inspectors are authorized to refuse to permit accompaniment by any individual who deliberately interferes with a fair and orderly inspection. With regard to any area containing proprietary information, the workers' representative for that area shall be an individual previously authorized by the licensee or registrant to enter that area.

A.6.6 **Consultation with Workers During Inspections.**

(a) Agency inspectors may consult privately with workers concerning matters of occupational radiation protection and other matters related to applicable provisions of Agency regulations, licenses and certificates of registration to the extent the inspectors deem necessary for the conduct of an effective and thorough inspection.

(b) During the course of an inspection any worker may bring privately to the attention of the inspectors, either orally or in writing, any past or present condition which the worker has reason to believe may have contributed to or caused any violation of the Act, these regulations, license or certificate of registration condition, or any unnecessary exposure of an individual to radiation from licensed radioactive material or a registered X-ray system under the licensee's or registrant's control. Any such notice in writing shall comply with the requirements of A.6.7(a).

(c) The provisions of A.6.6(b) shall not be interpreted as authorization to disregard instructions pursuant A.6.3.

A.6.7 **Requests by Workers for Inspections.**

(a) Any worker or representative of workers believing that a violation of the Act, these regulations or license or certificate of registration conditions exists or has occurred in work under a license or registration with regard to radiological working conditions in which the worker is engaged, may request an inspection by giving notice of the alleged violation to the Agency. Any such notice shall be in writing, shall set forth the specific grounds for the notice, and shall be signed by the worker or representative of the workers. A copy shall be provided to the licensee or registrant by the Agency no later than at the time of inspection except that, upon the request of the worker giving such notice, his name and the name of individuals referred to therein shall not

appear in such copy or on any record published, released, or made available by the Agency, except for good cause shown.

A.6.7(b)

(b) If, upon receipt of such notice, the Agency Administrator determines that the complaint meets the requirements set forth in A.6.7(a), and that there are reasonable grounds to believe that the alleged violation exists or has occurred, an inspection shall be made as soon as practicable, to determine if such alleged violation exists or has occurred. Inspections pursuant to this section need not be limited to matters referred to in the complaint.

(c) No licensee, or registrant shall discharge or in any manner discriminate against any worker because such worker has filed any complaint or instituted or caused to be instituted any proceeding under these regulations or has testified or is about to testify in any such proceeding or because of the exercise by such worker on behalf of himself or others of any option afforded by this part.

A.6.8 **Inspections Not Warranted; Informal Review.**

(a) If the Agency determines, with respect to a complaint under A.6.7, that an inspection is not warranted because there are no reasonable grounds to believe that a violation exists or has occurred, the Agency shall notify the complainant in writing of such determination. The complainant may obtain review of such determination by submitting a written statement of position with the Director of Health who will provide the licensee or registrant with a copy of such statement by certified mail, excluding, at the request of the complainant, the name of the complainant. The licensee or registrant may submit an opposing written statement of position with the Director of Health who will provide the complainant with a copy of such statement by certified mail. Upon the request of the complainant, the Director of Health may hold an informal conference in which the complainant and the licensee or registrant may orally present their views. An informal conference may also be held at the request of the licensee or registrant, but disclosure of the identity of the complainant will be made only following receipt of written authorization from the complainant. After considering all written or oral views presented, the Director of Health shall affirm, modify, or reverse the determination of the Agency and furnish the complainant and the licensee or registrant a written notification of his decision and the reason therefor.

(b) If the Agency determines that an inspection is not warranted because the requirements of A.6.7(a) have not been met,the complainant shall be notified in writing of such determination. Such determination shall be without prejudice to the filing of a new complaint meeting the requirements of A.6.7(a).

A.7 COMPLIANCE PROCEDURES

To ensure compliance with these regulations, the Agency shall proceed in accordance with the provisions of this subpart, as appropriate.

A.7.1 **Notice of Violation.**

(a) If, upon inspection or investigation, the administrator or his authorized representative finds that a registrant, licensee or other person subject to the Agency's jurisdiction has violated any of the provisions of the Act, these regulations, or any rules, orders or conditions imposed pursuant to the Act, he may issue a written Notice of Violation to the licensee, registrant, or other person subject to the Agency's jurisdiction.

(b) Each Notice of Violation shall describe the nature of the violation(s), including a reference to the provision(s) of the law, regulation, rule, order or condition alleged to have been violated.

(c) Each Notice of Violation shall require a consent agreement, whereby the registrant, licensee or other person subject to the Agency's jurisdiction shall provide a written response to the Agency within ten days of the service of the notice of Violation. The response shall specify the corrective actions which the registrant, licensee or other person subject to the Agency's jurisdiction proposes to take, along with an estimate of the time required to implement such actions. If the response is acceptable to the Agency, and the consent agreement is implemented, no further action will be taken.

AYYY

A.7.2 **Order of Abatement.** If, upon inspection or investigation, the administrator or his authorized representative finds that a registrant, licensee or other person subject to the Agency's jurisdiction has violated any of the provisions of the Act, these regulations, or any rules, orders or conditions imposed pursuant to the Act, or a consent agreement, he may issue an Order of Abatement. Also, if a registrant, licensee or other person subject to the Agency's jurisdiction fails to respond within ten days to a Notice of Violation, the Agency may issue an Order of Abatement.

(a) Each Order of Abatement shall describe the nature of the violation(s), including a reference to the provision(s) of the law, regulation, rule, order, condition, or consent agreement alleged to have been violated.

(b) Each Order of Abatement shall fix a reasonable time for the abatement of violations, which time shall not be later than ten days from the date of service of the order.

(c) Each Order of Abatement issued under this section shall be prominently posted so as to be conspicuously visible to employees and patrons of the licensee, registrant or other person subject to the Agency's jurisdiction.

A.7.3 **Emergency Authority.**

(a) Whenever the administrator finds that an emergency exists requiring immediate action to protect the public health or welfare, he may issue an order stating that an emergency exists and requiring that such action be taken as he deems necessary to meet the emergency. Such order shall be effective immediately.

(b) Any person to whom an emergency order is directed shall comply therewith immediately.

A.7.4 **Orders of Suspension, Modification, and Revocation.**

(a) An order may be issued for immediate suspension of a registration or license, or a portion thereof, as necessary to remove an immediate threat to the health or safety of a registrant's or licensee's employees or the public. Non-payment of fees beyond the due date may also result in the suspension of a registration or license.

(b) An order for the modification of a registration or license, in whole or in part, may be issued as an enforcement sanction, when it is determined that a registrant's or licensee's operations or activities must be limited or modified to protect the health, safety or interest of the registrant's or licensee's employees or the public.

(c) An order may be issued to revoke a registration or license when

(1) The registrant's or licensee's performance shows that he is not qualified to perform the activities covered by the registration or license; or

(2) The registrant or licensee refuses to correct violations; or

(3) A registrant or licensee does not comply with an Order of Abatement, or

(4) A registrant's or licensee's response to a Notice of Violation indicates inability or unwillingness to maintain compliance with regulatory requirements; or

(5) Any material false statement is made in the application or in any statement of fact required under these regulations.

A.7.5 **Agency Hearings.** In any proceeding under these regulations for granting, suspending, revoking, or modifying any registration or license, or for determining compliance with or granting exemptions from rules and regulations of the Agency, the Agency or any person whose interest may be affected by the proceeding may request and shall be afforded an opportunity for a hearing on the record.

A.7.6 **Formal Hearings.**

(a) Any person aggrieved by a finding or order of the Agency may request a hearing before the Director of Health or his authorized representative, at any time within fifteen days after notification. The Director of Health may affirm the finding or order of the Agency or reverse or modify it.

(b) Any person to whom an emergency order is directed shall, on application to the Director of Health, be afforded a hearing within fifteen days. On the basis of such hearing, the Director of Health shall continue such order in effect, revoke it, or modify it.

[REMAINDER OF PAGE INTENTIONALLY LEFT BLANK]

APPENDIX A

PROTECTION FACTORS FOR RESPIRATORS[1]

	Description[2]	Modes[3]	Protection Factors[4] Particulates only	Protection Factors[4] Particulates, gases, vapors[5]	Tested & Certified Equipment National Institute for Occupational Safety and Health & Mine Safety and Health Administration tests for permissibility
I.	**AIR-PURIFYING RESPIRATORS[6]**				
	Facepiece, half-mask[7]	NP	10		30 CFR 11,
	Facepiece, full	NP	50		Subpart K.
	Facepiece, half-mask full, or hood	PP	1000		
II.	**ATMOSPHERE-SUPPLYING RESPIRATORS**				
	1. **Air-line respirator**				
	Facepiece, half-mask	CF		1000	
	Facepiece, half-mask	D		5	
	Facepiece, full	CF		2000	
	Facepiece, full	D		5	30 CFR 11,
	Facepiece, full	PD		2000	Subpart J.
	Hood	CF		[8]	
	Suit	CF		[9]	[10]
	2. **Self-contained breathing apparatus (SCBA)**				
	Facepiece, full	D		50	
	Facepiece, full	PD		10,000[11]	
	30 CFR 11, Facepiece, full	RD		50	Subpart H.
	Facepiece, full	RP		5,000[12]	
III.	**COMBINATION RESPIRATORS**				
	Any combination of air-purifying and atmosphere-supplying respirators	Protection factor for type and mode of operation as listed above			30 CFR 11, Sec. 11.63(b).

[1]For use in the selection of respiratory protective equipment to be used only where the contaminants have been identified and the concentrations, or possible concentrations, are known.

[2]Only for shaven faces and where nothing interferes with the seal of tight-fitting facepieces against the skin. Hoods and suits are excepted.

[3]The mode symbols are defined as follows:
CF = continuous flow
D = demand
NP = negative pressure, that is, negative phase during inhalation
PD = pressure demand, that is, always positive pressure
PP = positive pressure
RD = demand, recirculating or closed circuit
RP = pressure demand, recirculating or closed circuit

[FOOTNOTES CONTINUE ON NEXT PAGE]

[4]a. The protection factor is a measure of the degree of protection afforded by a respirator, defined as the ratio of the concentration of airborne radioactive material outside the respiratory protective equipment to that inside the equipment, usually inside the facepiece, under conditions of use. It is applied to the ambient airborne concentration to estimate the concentrations inhaled by the wearer according to the following formula:

$$\text{Concentration inhaled} = \frac{\text{Ambient airborne concentration}}{\text{Protection factor}}$$

b. The protection factors apply:

(i) Only for individuals trained in using respirators and wearing properly fitted respirators that are used and maintained under supervision in a well-planned respiratory protective program.

(ii) For air-purifying respirators only when high efficiency particulate filters, above 99.97% removal efficiency by thermally generated 0.3 μm dioctyl phthalate (DOP) test or equivalent, are used in atmospheres not deficient in oxygen and not containing radioactive gas or vapor respiratory hazards.

(iii) No adjustment is to be made for the use of sorbents against radioactive material in the form of gases or vapors.

(iv) For atmosphere-supplying respirators only when supplied with adequate respirable air. Respirable air shall be provided of the quality and quantity required in accordance with the National Institute for Occupational Safety and Health and the Mine Safety and Health Administration certification described in 30 CFR 11. Oxygen and air shall not be used in the same apparatus.

[5]Excluding radioactive contaminants that present an absorption or submersion hazard. For tritium oxide, approximately one-third of the intake occurs by absorption through the skin so that an overall protection factor of less than 2 is appropriate when atmosphere-supplying respirators are used to protect against tritium oxide. If the protection factor for respiratory protective equipment is 5, the effective protection factor for tritium is about 1.4; with protection factors of 10, the effective factor for tritium oxide is about 1.7; and with protection factors of 100 or more, the effective factor for tritium oxide is about 1.9. Air-purifying respirators are not suitable for protection against tritium oxide. See also footnote 9 concerning supplied-air suits.

[6]Canisters and cartridges shall not be used beyond service-life limitations.

[7]Under-chin type only. This type of respirator is not satisfactory for use where it might be possible, such as, if an accident or emergency were to occur, for the ambient airborne concentrations to reach instantaneous values greater than 10 times the pertinent values in Table I, Column 3 of Appendix B to this Part. This type of respirator is not suitable for protection against plutonium or other high-toxicity materials. The mask is to be tested for fit prior to use, each time it is donned.

[8]a. Equipment shall be operated in a manner that ensures that proper air flow-rates are maintained. A protection factor of no more than 1000 may be utilized for tested-and-certified supplied-air hoods when a minimum air flow of 6 cubic feet per minute (0.17 m^3/min) is maintained and calibrated air line pressure gauges or flow measuring devices are used. A protection factor of up to 2000 may be used for tested and certified hoods only when the air flow is maintained at the manufacturer's recommended maximum rate for the equipment, this rate is greater than 6 cubic feet per minute (0.17 m^3/min) and calibrated air line pressure gauges or flow measuring devices are used.

b. The design of the supplied-air hood or helmet, with a minimum flow of 6 cubic feet per minute (0.17 m^3/min) of air, may determine its overall efficiency and the protection it provides. For example, some hoods aspirate contaminated air into the breathing zone when the wearer works with hands-over-head. This aspiration may be overcome if a short cape-like extension to the hood is worn under a coat or overalls. Other limitations specified by the approval agency shall be considered before using a hood in certain types of atmospheres. See footnote 9.

[9]Appropriate protection factors shall be determined, taking into account the design of the suit and its permeability to the contaminant under conditions of use. There shall be a standby rescue person equipped with a respirator or other apparatus appropriate for the potential hazards and communications equipment whenever supplied-air suits are used.

[FOOTNOTES CONTINUE ON NEXT PAGE]

FOOTNOTES [cont.]

[10]No approval schedules are currently available for this equipment. Equipment is to be evaluated by testing or on the basis of reliable test information.

[11]This type of respirator may provide greater protection and be used as an emergency device in unknown concentrations for protection against inhalation hazards. External radiation hazards and other limitations to permitted exposure, such as skin absorption, must be taken into account in such circumstances.

[12]Quantitative fit testing shall be performed on each individual, and no more than 0.02% leakage is allowed with this type of apparatus. Perceptible outward leakage of gas from this or any positive pressure self-contained breathing apparatus is unacceptable because service life will be reduced substantially. Special training in the use of this type of apparatus shall be provided to the wearer.

Note 1: Protection factors for respirators approved by the U.S. Bureau of Mines and the National Institute for Occupational Safety and Health, according to applicable approvals for respirators for type and mode of use to protect against airborne radionuclides, may be used to the extent that they do not exceed the protection factors listed in this table. The protection factors listed in this table may not be appropriate to circumstances where chemical or other respiratory hazards exist in addition to radioactive hazards. The selection and use of respirators for such circumstances should take into account applicable approvals of the U.S. Bureau of Mines and the National Institute for Occupational Safety and Health.

Note 2: Radioactive contaminants, for which the concentration values in Table I, Column 3 of Appendix B to this Part are based on internal dose due to inhalation, may present external exposure hazards at higher concentrations. Under these circumstances, limitations on occupancy may have to be governed by external dose limits.

APPENDIX B

ANNUAL LIMITS ON INTAKE (ALI) AND DERIVED AIR CONCENTRATIONS (DAC) OF RADIONUCLIDES FOR OCCUPATIONAL EXPOSURE; EFFLUENT CONCENTRATIONS; CONCENTRATIONS FOR RELEASE TO SANITARY SEWERAGE

Introduction

For each radionuclide, Table I indicates the chemical form which is to be used for selecting the appropriate ALI or DAC value. The ALIs and DACs for inhalation are given for an aerosol with an activity median aerodynamic diameter (AMAD) of 1 µm, micron, and for three classes (D,W,Y) of radioactive material, which refer to their retention (approximately days, weeks or years) in the pulmonary region of the lung. This classification applies to a range of clearance half-times for D if less than 10 days, for W from 10 to 100 days, and for Y greater than 100 days. Table II provides concentration limits for airborne and liquid effluents released to the general environment. Table III provides concentration limits for discharges to sanitary sewerage.

Note:

The values in Tables I, II, and III are presented in the computer "E" notation. In this notation a value of 6E-02 represents a value of 6×10^{-2} or 0.06, 6E+2 represents $6 \times 1O^{2}$ or 600, and 6E+0 represents 6×10^{0} or 6.

Table I "Occupational Values"

Note that the columns in Table I of this appendix captioned "Oral Ingestion ALI," "Inhalation ALI," and "DAC," are applicable to occupational exposure to radioactive material.

The ALIs in this appendix are the annual intakes of given radionuclide by "Reference Man" which would result in either (1) a committed effective dose equivalent of 0.05 Sv (5 rem), stochastic ALI, or (2) a committed dose equivalent of 0.5 Sv (50 rem) to an organ or tissue, non-stochastic ALI. The stochastic ALIs were derived to result in a risk, due to irradiation of organs and tissues, comparable to the risk associated with deep dose equivalent to the whole body of 0.05 Sv (5 rem). The derivation includes multiplying the committed dose equivalent to an organ or tissue by a weighting factor, w_T. This weighting factor is the proportion of the risk of stochastic effects resulting from irradiation of the organ or tissue, T, to the total risk of stochastic effects when the whole body is irradiated uniformly. The values of w_T are listed under the definition of weighting factor in A.0. The non-stochastic ALIs were derived to avoid non-stochastic effects, such as prompt damage to tissue or reduction in organ function.

A value of w_T = 0.06 is applicable to each of the five organs or tissues in the "remainder" category receiving the highest dose equivalents, and the dose equivalents of all other remaining tissues may be disregarded. The following portions of the GI tract -- stomach, small intestine, upper large intestine, and lower large intestine -- are to be treated as four separate organs.

Note that the dose equivalents for an extremity, skin and lens of the eye are not considered in computing the committed effective dose equivalent, but are subject to limits that must be met separately.

When an ALI is defined by the stochastic dose limit, this value alone is given. When an ALI is determined by the non-stochastic dose limit to an organ, the organ or tissue to which the limit applies is shown, and the ALI for the stochastic limit is shown in parentheses. Abbreviated organ or tissue designations are used:

LLI wall = lower large intestine wall;
St wall = stomach wall;
Blad wall = bladder wall; and
Bone surf = bone surface.

The use of the ALIs listed first, the more limiting of the stochastic and non-stochastic ALIs, will ensure that non-stochastic effects are avoided and that the risk of stochastic effects is limited to an acceptably low value. If, in a particular situation involving a radionuclide for which the non-stochastic ALI is limiting, use of that non-stochastic ALI is considered unduly conservative, the licensee may use the stochastic ALI to determine the committed effective dose equivalent. However, the licensee shall also ensure that the 0.5 Sv (50 rem) dose equivalent limit for any organ or tissue is not exceeded by the sum of the external deep dose equivalent plus the internal committed dose equivalent to that organ, not the effective dose. For the case where there is no external dose contribution, this would be demonstrated if the sum of the fractions of the nonstochastic ALIs (ALI_{ns}) that contribute to the committed dose equivalent to the organ receiving the highest dose does not exceed unity, that is, $\sum$ (intake (in μCi) of each radionuclide/ALI_{ns}) $\leq$ 1.0. If there is an external deep dose equivalent contribution of H_d, then this sum must be less than 1 - (H_d/50), instead of $\leq$ 1.0.

> Note that the dose equivalents for an extremity, skin, and lens of the eye are not considered in computing the committed effective dose equivalent, but are subject to limits that must be met separately.

The derived air concentration (DAC) values are derived limits intended to control chronic occupational exposures. The relationship between the DAC and the ALI is given by:

DAC = ALI(in µCi)/(2000 hours per working year x 60 minutes/hour x 2 x 10^4 ml per minute)
= [ALI/2.4 x 10^9] µCi/ml,

where 2 x 10^4 ml is the volume of air breathed per minute at work
by Reference Man under working conditions of light work.

The DAC values relate to one of two modes of exposure: either external submersion or the internal committed dose equivalents resulting from inhalation of radioactive materials. DACs based upon submersion are for immersion in a semi-infinite cloud of uniform concentration and apply to each radionuclide separately.

The ALI and DAC values include contributions to exposure by the single radionuclide named and any in-growth of daughter radionuclides produced in the body by decay of the parent. However, intakes that include both the parent and daughter radionuclides should be treated by the general method appropriate for mixtures.

The values of ALI and DAC do not apply directly when the individual both ingests and inhales a radionuclide, when the individual is exposed to a mixture of radionuclides by either inhalation or ingestion or both, or when the individual is exposed to both internal and external irradiation. [See A.2.4.] When an individual is exposed to radioactive materials which fall under several of the translocation classifications of the same radionuclide, such as, Class D, Class W, or Class Y, the exposure may be evaluated as if it were a mixture of different radionuclides.

It should be noted that the classification of a compound as Class D, W, or Y is based on the chemical form of the compound and does not take into account the radiological half-life of different radionuclides. For this reason, values are given for Class D, W, and Y compounds, even for very short-lived radionuclides.

Table II "Effluent Concentrations"

The columns in Table II of this appendix captioned "Effluents," "Air" and "Water" are applicable to the assessment and control of dose to the public, particularly in the implementation of the provisions of A.2.12. The concentration values given in Columns 1 and 2 of Table II are equivalent to the radionuclide concentrations which, if inhaled or ingested continuously over the course of a year, would produce a total effective dose equivalent of 0.5 mSv (0.05 rem).

Consideration of non-stochastic limits has not been included in deriving the air and water effluent concentration limits because non-stochastic effects are presumed not to occur at or below the dose levels established for individual members of the public. For radionuclides, where the non-stochastic limit was governing in deriving the occupational DAC, the stochastic ALI was used in deriving the corresponding airborne effluent limit in Table II. For this reason, the DAC and airborne effluent limits are not always proportional as was the case in Appendix A to Part A of the August 1991 edition of these regulations.

The air concentration values listed in Table II, Column 1 were derived by one of two methods. For those radionuclides for which the stochastic limit is governing, the occupational stochastic inhalation ALI was divided by 2.4×10^9, relating the inhalation ALI to the DAC, as explained above, and then divided by a factor of 300. The factor of 300 includes the following components: a factor of 50 to relate the 0.05 Sv (5 rem) annual occupational dose limit to the 1 mSv (0.1 rem) limit for members of the public, a factor of 3 to adjust for the difference in exposure time and the inhalation rate for a worker and that for members of the public; and a factor of 2 to adjust the occupational values, derived for adults, so that they are applicable to other age groups.

For those radionuclides for which submersion, that is external dose, is limiting, the occupational DAC in Table I, Column 3 was divided by 219. The factor of 219 is composed of a factor of 50, as described above, and a factor of 4.38 relating occupational exposure for 2,000 hours per year to full-time exposure (8,760 hours per year). Note that an additional factor of 2 for age considerations is not warranted in the submersion case.

The water concentrations were derived by taking the most restrictive occupational stochastic oral ingestion ALI and dividing by 7.3×10^7. The factor of 7.3×10^7 (ml) includes the following components: the factors of 50 and 2 described above and a factor of 7.3×10^5 (ml) which is the annual water intake of Reference Man.

Note 2 of this appendix provides groupings of radionuclides which are applicable to unknown mixtures of radionuclides. These groupings, including occupational inhalation ALIs and DACs, air and water effluent concentrations and releases to sewer, require demonstrating that the most limiting radionuclides in successive classes are absent. The limit for the unknown mixture is defined when the presence of one of the listed radionuclides cannot be definitely excluded as being present either from knowledge of the radionuclide composition of the source or from actual measurements.

Table III "Releases to Sewers"

The monthly average concentrations for release to sanitary sewerage are applicable to the provisions in A.4.3. The concentration values were derived by taking the most restrictive occupational stochastic oral ingestion ALI and dividing by $7.3 \times 1O^6$ (ml). The factor of $7.3 \times 1O^6$ (ml) is composed of a factor of $7.3 \times 1O^5$ (ml), the annual water intake by Reference Man, and a factor of 10, such that the concentrations, if the sewage released by the licensee were the only source of water ingested by a Reference Man during a year, would result in a committed effective dose equivalent of 5 mSv (0.5 rem).

[REMAINDER OF PAGE INTENTIONALLY LEFT BLANK]

LIST OF ELEMENTS

Name	Symbol	Atomic Number	Name	Symbol	Atomic Number
Actinium	Ac	89	Mercury	Hg	80
Aluminum	Al	13	Molybdenum	Mo	42
Americium	Am	95	Neodymium	Nd	60
Antimony	Sb	51	Neptunium	Np	93
Argon	Ar	18	Nickel	Ni	28
Arsenic	As	33	Niobium	Nb	41
Astatine	At	85	Osmium	Os	76
Barium	Ba	56	Palladium	Pd	46
Berkelium	Bk	97	Phosphorus	P	15
Beryllium	Be	4	Platinum	Pt	78
Bismuth	Bi	83	Plutonium	Pu	94
Bromine	Br	35	Polonium	Po	84
Cadmium	Cd	48	Potassium	K	19
Calcium	Ca	20	Praseodymium	Pr	59
Californium	Cf	98	Promethium	Pm	61
Carbon	C	6	Protactinium	Pa	91
Cerium	Ce	58	Radium	Ra	88
Cesium	Cs	55	Radon	Rn	86
Chlorine	Cl	17	Rhenium	Re	75
Chromium	Cr	24	Rhodium	Rh	45
Cobalt	Co	27	Rubidium	Rb	37
Copper	Cu	29	Ruthenium	Ru	44
Curium	Cm	96	Samarium	Sm	62
Dysprosium	Dy	66	Scandium	Sc	21
Einsteinium	Es	99	Selenium	Se	34
Erbium	Er	68	Silicon	Si	14
Europium	Eu	63	Silver	Ag	47
Fermium	Fm	100	Sodium	Na	11
Fluorine	F	9	Strontium	Sr	38
Francium	Fr	87	Sulfur	S	16
Gadolinium	Gd	64	Tantalum	Ta	73
Gallium	Ga	31	Technetium	Tc	43
Germanium	Ge	32	Tellurium	Te	52
Gold	Au	79	Terbium	Tb	65
Hafnium	Hf	72	Thallium	Tl	81
Holmium	Ho	67	Thorium	Th	90
Hydrogen	H	1	Thulium	Tm	69
Indium	In	49	Tin	Sn	50
Iodine	I	53	Titanium	Ti	22
Iridium	Ir	77	Tungsten	W	74
Iron	Fe	26	Uranium	U	92
Krypton	Kr	36	Vanadium	V	23
Lanthanum	La	57	Xenon	Xe	54
Lead	Pb	82	Ytterbium	Yb	70
Lutetium	Lu	71	Yttrium	Y	39
Magnesium	Mg	12	Zinc	Zn	30
Manganese	Mn	25	Zirconium	Zr	40
Mendelevium	Md	101			

Atomic No.	Radionuclide	Class	Table I Occupational Values Col. 1 Oral Ingestion ALI (µCi)	Table I Occupational Values Col. 2 Inhalation ALI (µCi)	Table I Occupational Values Col. 3 Inhalation DAC (µCi/ml)	Table II Effluent Concentrations Col. 1 Air (µCi/ml)	Table II Effluent Concentrations Col. 2 Water (µCi/ml)	Table III Releases to Sewers Monthly Average Concentration (µCi/ml)
1	Hydrogen-3	Water, DAC includes skin absorption	8E+4	8E+4	2E-5	1E-7	1E-3	1E-2
		Gas (HT or T_2) Submersion[1]: Use above values as HT and T_2 oxidize in air and in the body to HTO.						
4	Beryllium-7	W, all compounds except those given for Y	4E+4	2E+4	9E-6	3E-8	6E-4	6E-3
		Y, oxides, halides, and nitrates	-	2E+4	8E-6	3E-8	-	-
4	Beryllium-10	W, see ^{7}Be	1E+3	2E+2	6E-8	2E-10	-	-
			LLI wall (1E+3)	-	-	-	2E-5	2E-4
		Y, see ^{7}Be	-	1E+1	6E-9	2E-11	-	-
6	Carbon-11[2]	Monoxide	-	1E+6	5E-4	2E-6	-	-
		Dioxide	-	6E+5	3E-4	9E-7	-	-
		Compounds	4E+5	4E+5	2E-4	6E-7	6E-3	6E-2
6	Carbon-14	Monoxide	-	2E+6	7E-4	2E-6	-	-
		Dioxide	-	2E+5	9E-5	3E-7	-	-
		Compounds	2E+3	2E+3	1E-6	3E-9	3E-5	3E-4
9	Fluorine-18[2]	D, fluorides of H, Li, Na, K, Rb, Cs, and Fr	5E+4	7E+4	3E-5	1E-7	-	-
			St wall (5E+4)	-	-	-	7E-4	7E-3
		W, fluorides of Be, Mg, Ca, Sr, Ba, Ra, Al, Ga, In, Tl, As, Sb, Bi, Fe, Ru, Os, Co, Ni, Pd, Pt, Cu, Ag, Au, Zn, Cd, Hg, Sc, Y, Ti, Zr, V, Nb, Ta, Mn, Tc, and Re	-	9E+4	4E-5	1E-7	-	-
		Y, lanthanum fluoride	-	8E+4	3E-5	1E-7	-	-
11	Sodium-22	D, all compounds	4E+2	6E+2	3E-7	9E-10	6E-6	6E-5
11	Sodium-24	D, all compounds	4E+3	5E+3	2E-6	7E-9	5E-5	5E-4
12	Magnesium-28	D, all compounds except those given for W	7E+2	2E+3	7E-7	2E-9	9E-6	9E-5
		W, oxides, hydroxides, carbides, halides, and nitrates	-	1E+3	5E-7	2E-9	-	-
13	Aluminum-26	D, all compounds except those given for W	4E+2	6E+1	3E-8	9E-11	6E-6	6E-5
		W, oxides, hydroxides, carbides, halides, and nitrates	-	9E+1	4E-8	1E-10	-	-
14	Silicon-31	D, all compounds except those given for W and Y	9E+3	3E+4	1E-5	4E-8	1E-4	1E-3
		W, oxides, hydroxides, carbides, and nitrates	-	3E+4	1E-5	5E-8	-	-
		Y, aluminosilicate glass	-	3E+4	1E-5	4E-8	-	-
14	Silicon-32	D, see ^{31}Si	2E+3	2E+2	1E-7	3E-10	-	-
			LLI wall (3E+3)	-	-	-	4E-5	4E-4
		W, see ^{31}Si	-	1E+2	5E-8	2E-10	-	-
		Y, see ^{31}Si	-	5E+0	2E-9	7E-12	-	-

Atomic No.	Radionuclide	Class	Table I Occupational Values Col. 1 Oral Ingestion ALI (µCi)	Table I Occupational Values Col. 2 Inhalation ALI (µCi)	Table I Occupational Values Col. 3 Inhalation DAC (µCi/ml)	Table II Effluent Concentrations Col. 1 Air (µCi/ml)	Table II Effluent Concentrations Col. 2 Water (µCi/ml)	Table III Releases to Sewers Monthly Average Concentration (µCi/ml)
15	Phosphorus-32	D, all compounds except phosphates given for W	6E+2	9E+2	4E-7	1E-9	9E-6	9E-5
		W, phosphates of Zn^{2+}, S^{3+}, Mg^{2+}, Fe^{3+}, Bi^{3+}, and lanthanides	-	4E+2	2E-7	5E-10	-	-
15	Phosphorus-33	D, see ^{32}P	6E+3	8E+3	4E-6	1E-8	8E-5	8E-4
		W, see ^{32}P	-	3E+3	1E-6	4E-9	-	-
16	Sulfur-35	Vapor	-	1E+4	6E-6	2E-8	-	-
		D, sulfides and sulfates except those given for W	1E+4	2E+4	7E-6	2E-8	-	-
			LLI wall (8E+3)	-	-	-	1E-4	1E-3
		W, elemental sulfur, sulfides of Sr, Ba, Ge, Sn, Pb, As, Sb, Bi, Cu, Ag, Au, Zn, Cd, Hg, W, and Mo. Sulfates of Ca, Sr, Ba, Ra, As, Sb, and Bi	6E+3 -	2E+3	9E-7	3E-9	-	-
17	Chlorine-36	D, chlorides of H, Li, Na, K, Rb, Cs, and Fr	2E+3	2E+3	1E-6	3E-9	2E-5	2E-4
		W, chlorides of lanthanides, Be, Mg, Ca, Sr, Ba, Ra, Al, Ga, In, Tl, Ge, Sn, Pb, As, Sb, Bi, Fe, Ru, Os, Co, Rh, Ir, Ni, Pd, Pt, Cu, Ag, Au, Zn, Cd, Hg, Sc, Y, Ti, Zr, Hf, V, Nb, Ta, Cr, Mo, W, Mn, Tc, and Re	-	2E+2	1E-7	3E-10	-	-
17	Chlorine-38[2]	D, see ^{36}Cl	2E+4	4E+4	2E-5	6E-8	-	-
			St wall (3E+4)	-	-	-	3E-4	3E-3
		W, see ^{36}Cl	-	5E+4	2E-5	6E-8	-	-
17	Chlorine-39[2]	D, see ^{36}Cl	2E+4	5E+4	2E-5	7E-8	-	-
			St wall (4E+4)	-	-	-	5E-4	5E-3
		W, see ^{36}Cl	-	6E+4	2E-5	8E-8	-	-
18	Argon-37	Submersion[1]	-	-	1E+0	6E-3	-	-
18	Argon-39	Submersion[1]	-	-	2E-4	8E-7	-	-
18	Argon-41	Submersion[1]	-	-	3E-6	1E-8	-	-
19	Potassium-40	D, all compounds	3E+2	4E+2	2E-7	6E-10	4E-6	4E-5
19	Potassium-42	D, all compounds	5E+3	5E+3	2E-6	7E-9	6E-5	6E-4
19	Potassium-43	D, all compounds	6E+3	9E+3	4E-6	1E-8	9E-5	9E-4
19	Potassium-44[2]	D, all compounds	2E+4	7E+4	3E-5	9E-8	-	-
			St wall (4E+4)	-	-	-	5E-4	5E-3
19	Potassium-45[2]	D, all compounds	3E+4	1E+5	5E-5	2E-7	-	-
			St wall (5E+4)	-	-	-	7E-4	7E-3
20	Calcium-41	W, all compounds	3E+3	4E+3	2E-6	-	-	-
			Bone surf (4E+3)	Bone surf (4E+3)	-	5E-9	6E-5	6E-4
20	Calcium-45	W, all compounds	2E+3	8E+2	4E-7	1E-9	2E-5	2E-4
20	Calcium-47	W, all compounds	8E+2	9E+2	4E-7	1E-9	1E-5	1E-4

Atomic No.	Radionuclide	Class	Table I Occupational Values Col. 1 Oral Ingestion ALI (µCi)	Table I Occupational Values Col. 2 Inhalation ALI (µCi)	Table I Occupational Values Col. 3 Inhalation DAC (µCi/ml)	Table II Effluent Concentrations Col. 1 Air (µCi/ml)	Table II Effluent Concentrations Col. 2 Water (µCi/ml)	Table III Releases to Sewers Monthly Average Concentration (µCi/ml)
21	Scandium-43	Y, all compounds	7E+3	2E+4	9E-6	3E-8	1E-4	1E-3
21	Scandium-44m	Y, all compounds	5E+2	7E+2	3E-7	1E-9	7E-6	7E-5
21	Scandium-44	Y, all compounds	4E+3	1E+4	5E-6	2E-8	5E-5	5E-4
21	Scandium-46	Y, all compounds	9E+2	2E+2	1E-7	3E-10	1E-5	1E-4
21	Scandium-47	Y, all compounds	2E+3	3E+3	1E-6	4E-9	-	-
			LLI wall (3E+3)	-	-	-	4E-5	4E-4
21	Scandium-48	Y, all compounds	8E+2	1E+3	6E-7	2E-9	1E-5	1E-4
21	Scandium-49[2]	Y, all compounds	2E+4	5E+4	2E-5	8E-8	3E-4	3E-3
22	Titanium-44	D, all compounds except those given for W and Y	3E+2	1E+1	5E-9	2E-11	4E-6	4E-5
		W, oxides, hydroxides, carbides, halides, and nitrates	-	3E+1	1E-8	4E-11	-	-
		Y, $SrTi0_3$	-	6E+0	2E-9	8E-12	-	-
22	Titanium-45	D, see ^{44}Ti	9E+3	3E+4	1E-5	3E-8	1E-4	1E-3
		W, see ^{44}Ti	-	4E+4	1E-5	5E-8	-	-
		Y, see ^{44}Ti	-	3E+4	1E-5	4E-8	-	-
23	Vanadium-47[2]	D, all compounds except those given for W	3E+4	8E+4	3E-5	1E-7	-	-
			St wall (3E+4)	-	-	-	4E-4	4E-3
		W, oxides, hydroxides, carbides, and halides	-	1E+5	4E-5	1E-7	-	-
23	Vanadium-48	D, see ^{47}V	6E+2	1E+3	5E-7	2E-9	9E-6	9E-5
		W, see ^{47}V	-	6E+2	3E-7	9E-10	-	-
23	Vanadium-49	D, see ^{47}V	7E+4	3E+4	1E-5	-	-	-
			LLI wall (9E+4)	Bone surf (3E+4)	-	5E-8	1E-3	1E-2
		W, see ^{47}V	-	2E+4	8E-6	2E-8	-	-
24	Chromium-48	D, all compounds except those given for W and Y	6E+3	1E+4	5E-6	2E-8	8E-5	8E-4
		W, halides and nitrates	-	7E+3	3E-6	1E-8	-	-
		Y, oxides and hydroxides	-	7E+3	3E-6	1E-8	-	-
24	Chromium-49[2]	D, see ^{48}Cr	3E+4	8E+4	4E-5	1E-7	4E-4	4E-3
		W, see ^{48}Cr	-	1E+5	4E-5	1E-7	-	-
		Y, see ^{48}Cr	-	9E+4	4E-5	1E-7	-	-
24	Chromium-51	D, see ^{48}Cr	4E+4	5E+4	2E-5	6E-8	5E-4	5E-3
		W, see ^{48}Cr	-	2E+4	1E-5	3E-8	-	-
		Y, see ^{48}Cr	-	2E+4	8E-6	3E-8	-	-
25	Manganese-51[2]	D, all compounds except those given for W	2E+4	5E+4	2E-5	7E-8	3E-4	3E-3
		W, oxides, hydroxides, halides, and nitrates	-	6E+4	3E-5	8E-8	-	-
25	Manganese-52m[2]		D, see ^{51}Mn	3E+4	9E+4	4E-5	1E-7	--
			St wall (4E+4)	-	-	-	5E-4	5E-3
		W, see ^{51}Mn	-	1E+5	4E-5	1E-7	-	-
25	Manganese-52	D, see ^{51}Mn	7E+2	1E+3	5E-7	2E-9	1E-5	1E-4
		W, see ^{51}Mn	-	9E+2	4E-7	1E-9	-	-
25	Manganese-53	D, see ^{51}Mn	5E+4	1E+4	5E-6	-	7E-4	7E-3
				Bone surf				

Atomic No.	Radionuclide	Class	Table I Occupational Values Col. 1 Oral Ingestion ALI (µCi)	Table I Occupational Values Col. 2 Inhalation ALI (µCi)	Table I Occupational Values Col. 3 Inhalation DAC (µCi/ml)	Table II Effluent Concentrations Col. 1 Air (µCi/ml)	Table II Effluent Concentrations Col. 2 Water (µCi/ml)	Table III Releases to Sewers Monthly Average Concentration (µCi/ml)
			-	(2E+4)	-	3E-8	-	-
		W, see ^{51}Mn	-	1E+4	5E-6	2E-8	-	-
25	Manganese-54	D, see ^{51}Mn	2E+3	9E+2	4E-7	1E-9	3E-5	3E-4
		W, see ^{51}Mn	-	8E+2	3E-7	1E-9	-	-
25	Manganese-56	D, see ^{51}Mn	5E+3	2E+4	6E-6	2E-8	7E-5	7E-4
		W, see ^{51}Mn	-	2E+4	9E-6	3E-8	-	-

Atomic No.	Radionuclide	Class	Table I Occupational Values Col. 1 Oral Ingestion ALI (µCi)	Table I Occupational Values Col. 2 Inhalation ALI (µCi)	Table I Occupational Values Col. 3 Inhalation DAC (µCi/ml)	Table II Effluent Concentrations Col. 1 Air (µCi/ml)	Table II Effluent Concentrations Col. 2 Water (µCi/ml)	Table III Releases to Sewers Monthly Average Concentration (µCi/ml)
26	Iron-52	D, all compounds except those given for W	9E+2	3E+3	1E-6	4E-9	1E-5	1E-4
		W, oxides, hydroxides, and halides	-	2E+3	1E-6	3E-9	-	-
26	Iron-55	D, see ^{52}Fe	9E+3	2E+3	8E-7	3E-9	1E-4	1E-3
		W, see ^{52}Fe	-	4E+3	2E-6	6E-9	-	-
26	Iron-59	D, see ^{52}Fe	8E+2	3E+2	1E-7	5E-10	1E-5	1E-4
		W, see ^{52}Fe	-	5E+2	2E-7	7E-10	-	-
26	Iron-60	D, see ^{52}Fe	3E+1	6E+0	3E-9	9E-12	4E-7	4E-6
		W, see ^{52}Fe	-	2E+1	8E-9	3E-11	-	-
27	Cobalt-55	W, all compounds except those given for Y	1E+3	3E+3	1E-6	4E-9	2E-5	2E-4
		Y, oxides, hydroxides, halides, and nitrates	-	3E+3	1E-6	4E-9	-	-
27	Cobalt-56	W, see ^{55}Co	5E+2	3E+2	1E-7	4E-10	6E-6	6E-5
		Y, see ^{55}Co	4E+2	2E+2	8E-8	3E-10	-	-
27	Cobalt-57	W, see ^{55}Co	8E+3	3E+3	1E-6	4E-9	6E-5	6E-4
		Y, see ^{55}Co	4E+3	7E+2	3E-7	9E-10	-	-
27	Cobalt-58m	W, see ^{55}Co	6E+4	9E+4	4E-5	1E-7	8E-4	8E-3
		Y, see ^{55}Co	-	6E+4	3E-5	9E-8	-	-
27	Cobalt-58	W, see ^{55}Co	2E+3	1E+3	5E-7	2E-9	2E-5	2E-4
		Y, see ^{55}Co	1E+3	7E+2	3E-7	1E-9	-	-
27	Cobalt-60m[2]	W, see ^{55}Co	1E+6	4E+6	2E-3	6E-6	-	-
			St wall (1E+6)	-	-	-	2E-2	2E-1
		Y, see ^{55}Co	-	3E+6	1E-3	4E-6	-	-
27	Cobalt-60	W, see ^{55}Co	5E+2	2E+2	7E-8	2E-10	3E-6	3E-5
		Y, see ^{55}Co	2E+2	3E+1	1E-8	5E-11	-	-
27	Cobalt-61[2]	W, see ^{55}Co	2E+4	6E+4	3E-5	9E-8	3E-4	3E-3
		Y, see ^{55}Co	2E+4	6E+4	2E-5	8E-8	-	-
27	Cobalt-62m[2]	W, see ^{55}Co	4E+4	2E+5	7E-5	2E-7	-	-
			St wall (5E+4)	-	-	-	7E-4	7E-3
		Y, see ^{55}Co	-	2E+5	6E-5	2E-7	-	-
28	Nickel-56	D, all compounds except those given for W	1E+3	2E+3	8E-7	3E-9	2E-5	2E-4
		W, oxides, hydroxides, and carbides	-	1E+3	5E-7	2E-9	-	-
		Vapor	-	1E+3	5E-7	2E-9	-	-
28	Nickel-57	D, see ^{56}Ni	2E+3	5E+3	2E-6	7E-9	2E-5	2E-4
		W, see ^{56}Ni	-	3E+3	1E-6	4E-9	-	-
		Vapor	-	6E+3	3E-6	9E-9	-	-
28	Nickel-59	D, see ^{56}Ni	2E+4	4E+3	2E-6	5E-9	3E-4	3E-3
		W, see ^{56}Ni	-	7E+3	3E-6	1E-8	-	-
		Vapor	-	2E+3	8E-7	3E-9	-	-
28	Nickel-63	D, see ^{56}Ni	9E+3	2E+3	7E-7	2E-9	1E-4	1E-3
		W, see ^{56}Ni	-	3E+3	1E-6	4E-9	-	-
		Vapor	-	8E+2	3E-7	1E-9	-	-
28	Nickel-65	D, see ^{56}Ni	8E+3	2E+4	1E-5	3E-8	1E-4	1E-3
		W, see ^{56}Ni	-	3E+4	1E-5	4E-8	-	-
		Vapor	-	2E+4	7E-6	2E-8	-	-

		Table I Occupational Values			Table II Effluent Concentrations		Table III Releases to Sewers
		Col. 1	Col. 2	Col. 3	Col. 1	Col. 2	
		Oral Ingestion	Inhalation				Monthly Average
Atomic Radionuclide No.	Class	ALI (µCi)	ALI (µCi)	DAC (µCi/ml)	Air (µCi/ml)	Water (µCi/ml)	Concentration (µCi/ml)

Atomic No.	Radionuclide	Class	Table I Occupational Values Col. 1 Oral Ingestion ALI (µCi)	Table I Occupational Values Col. 2 Inhalation ALI (µCi)	Table I Occupational Values Col. 3 Inhalation DAC (µCi/ml)	Table II Effluent Concentrations Col. 1 Air (µCi/ml)	Table II Effluent Concentrations Col. 2 Water (µCi/ml)	Table III Releases to Sewers Monthly Average Concentration (µCi/ml)
28	Nickel-66	D, see ^{56}Ni	4E+2	2E+3	7E-7	2E-9	-	-
			LLI wall (5E+2)	-	-	-	6E-6	6E-5
		W, see ^{56}Ni	-	6E+2	3E-7	9E-10	-	-
		Vapor	-	3E+3	1E-6	4E-9	-	-
29	Copper-60[2]	D, all compounds except those given for W and Y	3E+4	9E+4	4E-5	1E-7	-	-
			St wall (3E+4)	-	-	-	4E-4	4E-3
		W, sulfides, halides, and nitrates	-	1E+5	5E-5	2E-7	-	-
		Y, oxides and hydroxides	-	1E+5	4E-5	1E-7	-	-
29	Copper-61	D, see ^{60}Cu	1E+4	3E+4	1E-5	4E-8	2E-4	2E-3
		W, see ^{60}Cu	-	4E+4	2E-5	6E-8	-	-
		Y, see ^{60}Cu	-	4E+4	1E-5	5E-8	-	-
29	Copper-64	D, see ^{60}Cu	1E+4	3E+4	1E-5	4E-8	2E-4	2E-3
		W, see ^{60}Cu	-	2E+4	1E-5	3E-8	-	-
		Y, see ^{60}Cu	-	2E+4	9E-6	3E-8	-	-
29	Copper-67	D, see ^{60}Cu	5E+3	8E+3	3E-6	1E-8	6E-5	6E-4
		W, see ^{60}Cu	-	5E+3	2E-6	7E-9	-	-
		Y, see ^{60}Cu	-	5E+3	2E-6	6E-9	-	-
30	Zinc-62	Y, all compounds	1E+3	3E+3	1E-6	4E-9	2E-5	2E-4
30	Zinc-63[2]	Y, all compounds	2E+4	7E+4	3E-5	9E-8	-	-
			St wall (3E+4)	-	-	-	3E-4	3E-3
30	Zinc-65	Y, all compounds	4E+2	3E+2	1E-7	4E-10	5E-6	5E-5
30	Zinc-69m	Y, all compounds	4E+3	7E+3	3E-6	1E-8	6E-5	6E-4
30	Zinc-69[2]	Y, all compounds	6E+4	1E+5	6E-5	2E-7	8E-4	8E-3
30	Zinc-71m	Y, all compounds	6E+3	2E+4	7E-6	2E-8	8E-5	8E-4
30	Zinc-72	Y, all compounds	1E+3	1E+3	5E-7	2E-9	1E-5	1E-4
31	Gallium-65[2]	D, all compounds except those given for W	5E+4	2E+5	7E-5	2E-7	-	-
			St wall (6E+4)	-	-	-	9E-4	9E-3
		W, oxides, hydroxides, carbides, halides, and nitrates	-	2E+5	8E-5	3E-7	-	-
31	Gallium-66	D, see ^{65}Ga	1E+3	4E+3	1E-6	5E-9	1E-5	1E-4
		W, see ^{65}Ga	-	3E+3	1E-6	4E-9	-	-
31	Gallium-67	D, see ^{65}Ga	7E+3	1E+4	6E-6	2E-8	1E-4	1E-3
		W, see ^{65}Ga	-	1E+4	4E-6	1E-8	-	-
31	Gallium-68[2]	D, see ^{65}Ga	2E+4	4E+4	2E-5	6E-8	2E-4	2E-3
		W, see ^{65}Ga	-	5E+4	2E-5	7E-8	-	-
31	Gallium-70[2]	D, see ^{65}Ga	5E+4	2E+5	7E-5	2E-7	-	-
			St wall (7E+4)	-	-	-	1E-3	1E-2
		W, see ^{65}Ga	-	2E+5	8E-5	3E-7	-	-
31	Gallium-72	D, see ^{65}Ga	1E+3	4E+3	1E-6	5E-9	2E-5	2E-4
		W, see ^{65}Ga	-	3E+3	1E-6	4E-9	-	-
31	Gallium-73	D, see ^{65}Ga	5E+3	2E+4	6E-6	2E-8	7E-5	7E-4
		W, see ^{65}Ga	-	2E+4	6E-6	2E-8	-	-

Atomic Radionuclide No.	Class	Table I Occupational Values			Table II Effluent Concentrations		Table III Releases to Sewers
		Col. 1	Col. 2	Col. 3	Col. 1	Col. 2	
		Oral Ingestion	Inhalation				
		ALI (µCi)	ALI (µCi)	DAC (µCi/ml)	Air (µCi/ml)	Water (µCi/ml)	Monthly Average Concentration (µCi/ml)

Atomic No.	Radionuclide	Class	Table I Occupational Values Col. 1 Oral Ingestion ALI (µCi)	Table I Occupational Values Col. 2 Inhalation ALI (µCi)	Table I Occupational Values Col. 3 Inhalation DAC (µCi/ml)	Table II Effluent Concentrations Col. 1 Air (µCi/ml)	Table II Effluent Concentrations Col. 2 Water (µCi/ml)	Table III Releases to Sewers Monthly Average Concentration (µCi/ml)
32	Germanium-66	D, all compounds except those given for W	2E+4	3E+4	1E-5	4E-8	3E-4	3E-3
		W, oxides, sulfides, and halides	-	2E+4	8E-6	3E-8	-	-
32	Germanium-67[2]	D, see ^{66}Ge	3E+4	9E+4	4E-5	1E-7	-	-
			St wall (4E+4)	-	-	-	6E-4	6E-3
		W, see ^{66}Ge	-	1E+5	4E-5	1E-7	-	-
32	Germanium-68	D, see ^{66}Ge	5E+3	4E+3	2E-6	5E-9	6E-5	6E-4
		W, see ^{66}Ge	-	1E+2	4E-8	1E-10	-	-
32	Germanium-69	D, see ^{66}Ge	1E+4	2E+4	6E-6	2E-8	2E-4	2E-3
		W, see ^{66}Ge	-	8E+3	3E-6	1E-8	-	-
32	Germanium-71	D, see ^{66}Ge	5E+5	4E+5	2E-4	6E-7	7E-3	7E-2
		W, see ^{66}Ge	-	4E+4	2E-5	6E-8	-	-
32	Germanium-75[2]	D, see ^{66}Ge	4E+4	8E+4	3E-5	1E-7	-	-
			St wall (7E+4)	-	-	-	9E-4	9E-3
		W, see ^{66}Ge	-	8E+4	4E-5	1E-7	-	-
32	Germanium-77	D, see ^{66}Ge	9E+3	1E+4	4E-6	1E-8	1E-4	1E-3
		W, see ^{66}Ge	-	6E+3	2E-6	8E-9	-	-
32	Germanium-78[2]	D, see ^{66}Ge	2E+4	2E+4	9E-6	3E-8	-	-
			St wall (2E+4)	-	-	-	3E-4	3E-3
		W, see ^{66}Ge	-	2E+4	9E-6	3E-8	-	-
33	Arsenic-69[2]	W, all compounds	3E+4	1E+5	5E-5	2E-7	-	-
			St wall (4E+4)	-	-	-	6E-4	6E-3
33	Arsenic-70[2]	W, all compounds	1E+4	5E+4	2E-5	7E-8	2E-4	2E-3
33	Arsenic-71	W, all compounds	4E+3	5E+3	2E-6	6E-9	5E-5	5E-4
33	Arsenic-72	W, all compounds	9E+2	1E+3	6E-7	2E-9	1E-5	1E-4
33	Arsenic-73	W, all compounds	8E+3	2E+3	7E-7	2E-9	1E-4	1E-3
33	Arsenic-74	W, all compounds	1E+3	8E+2	3E-7	1E-9	2E-5	2E-4
33	Arsenic-76	W, all compounds	1E+3	1E+3	6E-7	2E-9	1E-5	1E-4
33	Arsenic-77	W, all compounds	4E+3	5E+3	2E-6	7E-9	-	-
			LLI wall (5E+3)	-	-	-	6E-5	6E-4
33	Arsenic-78[2]	W, all compounds	8E+3	2E+4	9E-6	3E-8	1E-4	1E-3
34	Selenium-70[2]	D, all compounds except those given for W	2E+4	4E+4	2E-5	5E-8	1E-4	1E-3
		W, oxides, hydroxides, carbides, and elemental Se	1E+4	4E+4	2E-5	6E-8	-	-
34	Selenium-73m[2]	D, see ^{70}Se	6E+4	2E+5	6E-5	2E-7	4E-4	4E-3
		W, see ^{70}Se	3E+4	1E+5	6E-5	2E-7	-	-
34	Selenium-73	D, see ^{70}Se	3E+3	1E+4	5E-6	2E-8	4E-5	4E-4
		W, see ^{70}Se	-	2E+4	7E-6	2E-8	-	-
34	Selenium-75	D, see ^{70}Se	5E+2	7E+2	3E-7	1E-9	7E-6	7E-5
		W, see ^{70}Se	-	6E+2	3E-7	8E-10	-	-

		Table I Occupational Values			Table II Effluent Concentrations		Table III Releases to Sewers
		Col. 1	Col. 2	Col. 3	Col. 1	Col. 2	
		Oral Ingestion	Inhalation				Monthly Average
Atomic Radionuclide No.	Class	ALI (µCi)	ALI (µCi)	DAC (µCi/ml)	Air (µCi/ml)	Water (µCi/ml)	Concentration (µCi/ml)

Atomic No.	Radionuclide	Class	Table I Occupational Values Col. 1 Oral Ingestion ALI (µCi)	Table I Occupational Values Col. 2 Inhalation ALI (µCi)	Table I Occupational Values Col. 3 Inhalation DAC (µCi/ml)	Table II Effluent Concentrations Col. 1 Air (µCi/ml)	Table III Releases to Sewers Col. 2 Water (µCi/ml)	Table III Releases to Sewers Monthly Average Concentration (µCi/ml)
34	Selenium-79	D, see ^{70}Se	6E+2	8E+2	3E-7	1E-9	8E-6	8E-5
		W, see ^{70}Se	-	6E+2	2E-7	8E-10	-	-
34	Selenium-81m[2]	D, see ^{70}Se	4E+4	7E+4	3E-5	9E-8	3E-4	3E-3
		W, see ^{70}Se	2E+4	7E+4	3E-5	1E-7	-	-
34	Selenium-81[2]	D, see ^{70}Se	6E+4	2E+5	9E-5	3E-7	-	-
			St wall (8E+4)	-	-	-	1E-3	1E-2
		W, see ^{70}Se	-	2E+5	1E-4	3E-7	-	-
34	Selenium-83[2]	D, see ^{70}Se	4E+4	1E+5	5E-5	2E-7	4E-4	4E-3
		W, see ^{70}Se	3E+4	1E+5	5E-5	2E-7	-	-
35	Bromine-74m[2]	D, bromides of H, Li, Na, K, Rb, Cs, and Fr	1E+4	4E+4	2E-5	5E-8	-	-
			St wall (2E+4)	-	-	-	3E-4	3E-3
		W, bromides of lanthanides, Be, Mg, Ca, Sr, Ba, Ra, Al, Ga, In, Tl, Ge, Sn, Pb, As, Sb, Bi, Fe, Ru, Os, Co, Rh, Ir, Ni, Pd, Pt, Cu, Ag, Au, Zn, Cd, Hg, Sc, Y, Ti, Zr, Hf, V, Nb, Ta, Mn, Tc, and Re	-	4E+4	2E-5	6E-8	-	-
35	Bromine-74[2]	D, see ^{74m}Br	2E+4	7E+4	3E-5	1E-7	-	-
			St wall (4E+4)	-	-	-	5E-4	5E-3
		W, see ^{74m}Br	-	8E+4	4E-5	1E-7	-	-
35	Bromine-75[2]	D, see ^{74m}Br	3E+4	5E+4	2E-5	7E-8	-	-
			St wall (4E+4)	-	-	-	5E-4	5E-3
		W, see ^{74m}Br	-	5E+4	2E-5	7E-8	-	-
35	Bromine-76	D, see ^{74m}Br	4E+3	5E+3	2E-6	7E-9	5E-5	5E-4
		W, see ^{74m}Br	-	4E+3	2E-6	6E-9	-	-
35	Bromine-77	D, see ^{74m}Br	2E+4	2E+4	1E-5	3E-8	2E-4	2E-3
		W, see ^{74m}Br	-	2E+4	8E-6	3E-8	-	-
35	Bromine-80m	D, see ^{74m}Br	2E+4	2E+4	7E-6	2E-8	3E-4	3E-3
		W, see ^{74m}Br	-	1E+4	6E-6	2E-8	-	-
35	Bromine-80[2]	D, see ^{74m}Br	5E+4	2E+5	8E-5	3E-7	-	-
			St wall (9E+4)	-	-	-	1E-3	1E-2
		W, see ^{74m}Br	-	2E+5	9E-5	3E-7	-	-
35	Bromine-82	D, see ^{74m}Br	3E+3	4E+3	2E-6	6E-9	4E-5	4E-4
		W, see ^{74m}Br	-	4E+3	2E-6	5E-9	-	-
35	Bromine-83	D, see ^{74m}Br	5E+4	6E+4	3E-5	9E-8	-	-
			St wall (7E+4)	-	-	-	9E-4	9E-3
		W, see ^{74m}Br	-	6E+4	3E-5	9E-8	-	-
35	Bromine-84[2]	D, see ^{74m}Br	2E+4	6E+4	2E-5	8E-8	-	-
			St wall (3E+4)	-	-	-	4E-4	4E-3
		W, see ^{74m}Br	-	6E+4	3E-5	9E-8	-	-
36	Krypton-74[2]	Submersion[1]	-	-	3E-6	1E-8	-	-
36	Krypton-76	Submersion[1]	-	-	9E-6	4E-8	-	-
36	Krypton-77[2]	Submersion[1]	-	-	4E-6	2E-8	-	-

Atomic No.	Radionuclide	Class	Table I Occupational Values Col. 1 Oral Ingestion ALI (µCi)	Table I Occupational Values Col. 2 Inhalation ALI (µCi)	Table I Occupational Values Col. 3 Inhalation DAC (µCi/ml)	Table II Effluent Concentrations Col. 1 Air (µCi/ml)	Table II Effluent Concentrations Col. 2 Water (µCi/ml)	Table III Releases to Sewers Monthly Average Concentration (µCi/ml)
36	Krypton-79	Submersion[1]	-	-	2E-5	7E-8	-	-
36	Krypton-81	Submersion[1]	-	-	7E-4	3E-6	-	-
36	Krypton-83m[2]	Submersion[1]	-	-	1E-2	5E-5	-	-
36	Krypton-85m	Submersion[1]	-	-	2E-5	1E-7	-	-
36	Krypton-85	Submersion[1]	-	-	1E-4	7E-7	-	-
36	Krypton-87[2]	Submersion[1]	-	-	5E-6	2E-8	-	-
36	Krypton-88	Submersion[1]	-	-	2E-6	9E-9	-	-
37	Rubidium-79[2]	D, all compounds	4E+4	1E+5	5E-5	2E-7	-	-
			St wall (6E+4)	-	-	-	8E-4	8E-3
37	Rubidium-81m[2]	D, all compounds	2E+5	3E+5	1E-4	5E-7	-	-
			St wall (3E+5)	-	-	-	4E-3	4E-2
37	Rubidium-81	D, all compounds	4E+4	5E+4	2E-5	7E-8	5E-4	5E-3
37	Rubidium-82m	D, all compounds	1E+4	2E+4	7E-6	2E-8	2E-4	2E-3
37	Rubidium-83	D, all compounds	6E+2	1E+3	4E-7	1E-9	9E-6	9E-5
37	Rubidium-84	D, all compounds	5E+2	8E+2	3E-7	1E-9	7E-6	7E-5
37	Rubidium-86	D, all compounds	5E+2	8E+2	3E-7	1E-9	7E-6	7E-5
37	Rubidium-87	D, all compounds	1E+3	2E+3	6E-7	2E-9	1E-5	1E-4
37	Rubidium-88[2]	D, all compounds	2E+4	6E+4	3E-5	9E-8	-	-
			St wall (3E+4)	-	-	-	4E-4	4E-3
37	Rubidium-89[2]	D, all compounds	4E+4	1E+5	6E-5	2E-7	-	-
			St wall (6E+4)	-	-	-	9E-4	9E-3
38	Strontium-80[2]	D, all soluble compounds except $SrTiO_3$	4E+3	1E+4	5E-6	2E-8	6E-5	6E-4
		Y, all insoluble compounds and $SrTi0_3$	-	1E+4	5E-6	2E-8	-	-
38	Strontium-81[2]	D, see ^{80}Sr	3E+4	8E+4	3E-5	1E-7	3E-4	3E-3
		Y, see ^{80}Sr	2E+4	8E+4	3E-5	1E-7	-	-
38	Strontium-82	D, see ^{80}Sr	3E+2	4E+2	2E-7	6E-10	-	-
			LLI wall (2E+2)	-	-	-	3E-6	3E-5
		Y, see ^{80}Sr	2E+2	9E+1	4E-8	1E-10	-	-
38	Strontium-83	D, see ^{80}Sr	3E+3	7E+3	3E-6	1E-8	3E-5	3E-4
		Y, see ^{80}Sr	2E+3	4E+3	1E-6	5E-9	-	-
38	Strontium-85m[2]	D, see ^{80}Sr	2E+5	6E+5	3E-4	9E-7	3E-3	3E-2
		Y, see ^{80}Sr	-	8E+5	4E-4	1E-6	-	-
38	Strontium-85	D, see ^{80}Sr	3E+3	3E+3	1E-6	4E-9	4E-5	4E-4
		Y, see ^{80}Sr	-	2E+3	6E-7	2E-9	-	-
38	Strontium-87m	D, see ^{80}Sr	5E+4	1E+5	5E-5	2E-7	6E-4	6E-3
		Y, see ^{80}Sr	4E+4	2E+5	6E-5	2E-7	-	-
38	Strontium-89	D, see ^{80}Sr	6E+2	8E+2	4E-7	1E-9	-	-
			LLI wall (6E+2)	-	-	-	8E-6	8E-5

Atomic Radionuclide No.	Class	Table I Occupational Values Col. 1 Oral Ingestion ALI (µCi)	Col. 2 Inhalation ALI (µCi)	Col. 3 Inhalation DAC (µCi/ml)	Table II Effluent Concentrations Col. 1 Air (µCi/ml)	Col. 2 Water (µCi/ml)	Table III Releases to Sewers Monthly Average Concentration (µCi/ml)
	Y, see ^{80}Sr	5E+2	1E+2	6E-8	2E-10	-	-

Atomic No.	Radionuclide	Class	Table I Occupational Values Col. 1 Oral Ingestion ALI (µCi)	Table I Occupational Values Col. 2 Inhalation ALI (µCi)	Table I Occupational Values Col. 3 Inhalation DAC (µCi/ml)	Table II Effluent Concentrations Col. 1 Air (µCi/ml)	Table II Effluent Concentrations Col. 2 Water (µCi/ml)	Table III Releases to Sewers Monthly Average Concentration (µCi/ml)
38	Strontium-90	D, see ^{80}Sr	3E+1	2E+1	8E-9	-	-	-
			Bone surf (4E+1)	Bone surf (2E+1)	-	3E-11	5E-7	5E-6
		Y, see ^{80}Sr	-	4E+0	2E-9	6E-12	-	-
38	Strontium-91	D, see ^{80}Sr	2E+3	6E+3	2E-6	8E-9	2E-5	2E-4
		Y, see ^{80}Sr	-	4E+3	1E-6	5E-9	-	-
38	Strontium-92	D, see ^{80}Sr	3E+3	9E+3	4E-6	1E-8	4E-5	4E-4
		Y, see ^{80}Sr	-	7E+3	3E-6	9E-9	-	-
39	Yttrium-86m[2]	W, all compounds except those given for Y	2E+4	6E+4	2E-5	8E-8	3E-4	3E-3
		Y, oxides and hydroxides	-	5E+4	2E-5	8E-8	-	-
39	Yttrium-86	W, see ^{86m}Y	1E+3	3E+3	1E-6	5E-9	2E-5	2E-4
		Y, see ^{86m}Y	-	3E+3	1E-6	5E-9	-	-
39	Yttrium-87	W, see ^{86m}Y	2E+3	3E+3	1E-6	5E-9	3E-5	3E-4
		Y, see ^{86m}Y	-	3E+3	1E-6	5E-9	-	-
39	Yttrium-88	W, see ^{86m}Y	1E+3	3E+2	1E-7	3E-10	1E-5	1E-4
		Y, see ^{86m}Y	-	2E+2	1E-7	3E-10	-	-
39	Yttrium-90m	W, see ^{86m}Y	8E+3	1E+4	5E-6	2E-8	1E-4	1E-3
		Y, see ^{86m}Y	-	1E+4	5E-6	2E-8	-	-
39	Yttrium-90	W, see ^{86m}Y	4E+2	7E+2	3E-7	9E-10	-	-
			LLI wall (5E+2)	-	-	-	7E-6	7E-5
		Y, see ^{86m}Y	-	6E+2	3E-7	9E-10	-	-
39	Yttrium-91m[2]	W, see ^{86m}Y	1E+5	2E+5	1E-4	3E-7	2E-3	2E-2
		Y, see ^{86m}Y	-	2E+5	7E-5	2E-7	-	-
39	Yttrium-91	W, see ^{86m}Y	5E+2	2E+2	7E-8	2E-10	-	-
			LLI wall (6E+2)	-	-	-	8E-6	8E-5
		Y, see ^{86m}Y	-	1E+2	5E-8	2E-10	-	-
39	Yttrium-92	W, see ^{86m}Y	3E+3	9E+3	4E-6	1E-8	4E-5	4E-4
		Y, see ^{86m}Y	-	8E+3	3E-6	1E-8	-	-
39	Yttrium-93	W, see ^{86m}Y	1E+3	3E+3	1E-6	4E-9	2E-5	2E-4
		Y, see ^{86m}Y	-	2E+3	1E-6	3E-9	-	-
39	Yttrium-94[2]	W, see ^{86m}Y	2E+4	8E+4	3E-5	1E-7	-	-
			St wall (3E+4)	-	-	-	4E-4	4E-3
		Y, see ^{86m}Y	-	8E+4	3E-5	1E-7	-	-
39	Yttrium-95[2]	W, see ^{86m}Y	4E+4	2E+5	6E-5	2E-7	-	-
			St wall (5E+4)	-	-	-	7E-4	7E-3
		Y, see ^{86m}Y	-	1E+5	6E-5	2E-7	-	-
40	Zirconium-86	D, all compounds except those given for W and Y	1E+3	4E+3	2E-6	6E-9	2E-5	2E-4
		W, oxides, hydroxides, halides, and nitrates	-	3E+3	1E-6	4E-9	-	-
		Y, carbide	-	2E+3	1E-6	3E-9	-	-
40	Zirconium-88	D, see ^{86}Zr	4E+3	2E+2	9E-8	3E-10	5E-5	5E-4
		W, see ^{86}Zr	-	5E+2	2E-7	7E-10	-	-
		Y, see ^{86}Zr	-	3E+2	1E-7	4E-10	-	-
40	Zirconium-89	D, see ^{86}Zr	2E+3	4E+3	1E-6	5E-9	2E-5	2E-4
		W, see ^{86}Zr	-	2E+3	1E-6	3E-9	-	-
		Y, see ^{86}Zr	-	2E+3	1E-6	3E-9	-	-

Atomic Radionuclide No.	Class	Table I Occupational Values			Table II Effluent Concentrations		Table III Releases to Sewers
		Col. 1	Col. 2	Col. 3	Col. 1	Col. 2	
		Oral Ingestion	Inhalation				
		ALI (µCi)	ALI (µCi)	DAC (µCi/ml)	Air (µCi/ml)	Water (µCi/ml)	Monthly Average Concentration (µCi/ml)

Atomic No.	Radionuclide	Class	Table I Occupational Values Col. 1 Oral Ingestion ALI (µCi)	Table I Occupational Values Col. 2 Inhalation ALI (µCi)	Table I Occupational Values Col. 3 Inhalation DAC (µCi/ml)	Table II Effluent Concentrations Col. 1 Air (µCi/ml)	Table II Effluent Concentrations Col. 2 Water (µCi/ml)	Table III Releases to Sewers Monthly Average Concentration (µCi/ml)
40	Zirconium-93	D, see ^{86}Zr	1E+3	6E+0	3E-9	-	-	-
			Bone surf (3E+3)	Bone surf (2E+1)	-	2E-11	4E-5	4E-4
		W, see ^{86}Zr	-	2E+1	1E-8	-	-	-
			-	Bone surf (6E+1)	-	9E-11	-	-
		Y, see ^{86}Zr	-	6E+1	2E-8	-	-	-
			-	Bone surf (7E+1)	-	9E-11	-	-
40	Zirconium-95	D, see ^{86}Zr	1E+3	1E+2	5E-8	-	2E-5	2E-4
			-	Bone surf (3E+2)	-	4E-10	-	-
		W, see ^{86}Zr	-	4E+2	2E-7	5E-10	-	-
		Y, see ^{86}Zr	-	3E+2	1E-7	4E-10	-	-
40	Zirconium-97	D, see ^{86}Zr	6E+2	2E+3	8E-7	3E-9	9E-6	9E-5
		W, see ^{86}Zr	-	1E+3	6E-7	2E-9	-	-
		Y, see ^{86}Zr	-	1E+3	5E-7	2E-9	-	-
41	Niobium-88[2]	W, all compounds except those given for Y	5E+4	2E+5	9E-5	3E-7	-	-
			St wall (7E+4)	-	-	-	1E-3	1E-2
		Y, oxides and hydroxides	-	2E+5	9E-5	3E-7	-	-
41	Niobium-89m[2] (66 min)	W, see ^{88}Nb	1E+4	4E+4	2E-5	6E-8	1E-4	1E-3
		Y, see ^{88}Nb	-	4E+4	2E-5	5E-8	-	-
41	Niobium-89 (122 min)	W, see ^{88}Nb	5E+3	2E+4	8E-6	3E-8	7E-5	7E-4
		Y, see ^{88}Nb	-	2E+4	6E-6	2E-8	-	-
41	Niobium-90	W, see ^{88}Nb	1E+3	3E+3	1E-6	4E-9	1E-5	1E-4
		Y, see ^{88}Nb	-	2E+3	1E-6	3E-9	-	-
41	Niobium-93m	W, see ^{88}Nb	9E+3	2E+3	8E-7	3E-9	-	-
			LLI wall (1E+4)	-	-	-	2E-4	2E-3
		Y, see ^{88}Nb	-	2E+2	7E-8	2E-10	-	-
41	Niobium-94	W, see ^{88}Nb	9E+2	2E+2	8E-8	3E-10	1E-5	1E-4
		Y, see ^{88}Nb	-	2E+1	6E-9	2E-11	-	-
41	Niobium-95m	W, see ^{88}Nb	2E+3	3E+3	1E-6	4E-9	-	-
			LLI wall (2E+3)	-	-	-	3E-5	3E-4
		Y, see ^{88}Nb	-	2E+3	9E-7	3E-9	-	-
41	Niobium-95	W, see ^{88}Nb	2E+3	1E+3	5E-7	2E-9	3E-5	3E-4
		Y, see ^{88}Nb	-	1E+3	5E-7	2E-9	-	-
41	Niobium-96	W, see ^{88}Nb	1E+3	3E+3	1E-6	4E-9	2E-5	2E-4
		Y, see ^{88}Nb	-	2E+3	1E-6	3E-9	-	-
41	Niobium-97[2]	W, see ^{88}Nb	2E+4	8E+4	3E-5	1E-7	3E-4	3E-3
		Y, see ^{88}Nb	-	7E+4	3E-5	1E-7	-	-
41	Niobium-98[2]	W, see ^{88}Nb	1E+4	5E+4	2E-5	8E-8	2E-4	2E-3
		Y, see ^{88}Nb	-	5E+4	2E-5	7E-8	-	-
42	Molybdenum-90	D, all compounds except those given for Y	4E+3	7E+3	3E-6	1E-8	3E-5	3E-4
		Y, oxides, hydroxides, and MoS_2	2E+3	5E+3	2E-6	6E-9	-	-
42	Molybdenum-93m	D, see ^{90}Mo	9E+3	2E+4	7E-6	2E-8	6E-5	6E-4
		Y, see ^{90}Mo	4E+3	1E+4	6E-6	2E-8	-	-

Atomic No.	Radionuclide	Class	Table I Occupational Values Col. 1 Oral Ingestion ALI (µCi)	Col. 2 Inhalation ALI (µCi)	Col. 3 Inhalation DAC (µCi/ml)	Table II Effluent Concentrations Col. 1 Air (µCi/ml)	Col. 2 Water (µCi/ml)	Table III Releases to Sewers Monthly Average Concentration (µCi/ml)
42	Molybdenum-93		D, see ^{90}Mo	4E+3	5E+3	2E-6	8E-9	5E-55E-4
		Y, see ^{90}Mo	2E+4	2E+2	8E-8	2E-10	-	-
42	Molybdenum-99		D, see ^{90}Mo	2E+3	3E+3	1E-6	4E-9	--
			LLI wall (1E+3)	-	-	-	2E-5	2E-4
		Y, see ^{90}Mo	1E+3	1E+3	6E-7	2E-9	-	-
42	Molybdenum-101[2]		D, see ^{90}Mo	4E+4	1E+5	6E-5	2E-7	--
			(5E+4)	St wall -	-	-	7E-4	7E-3
		Y, see ^{90}Mo	-	1E+5	6E-5	2E-7	-	-
43	Technetium-93m[2]		D, all compounds except					
		those given for W	7E+4	2E+5	6E-5	2E-7	1E-3	1E-2
		W, oxides, hydroxides, halides, and nitrates	-	3E+5	1E-4	4E-7	-	-
43	Technetium-93	D, see ^{93m}Tc	3E+4	7E+4	3E-5	1E-7	4E-4	4E-3
		W, see ^{93m}Tc	-	1E+5	4E-5	1E-7	-	-
43	Technetium-94m[2]		D, see ^{93m}Tc	2E+4	4E+4	2E-5	6E-8	3E-43E-3
		W, see ^{93m}Tc	-	6E+4	2E-5	8E-8	-	-
43	Technetium-94	D, see ^{93m}Tc	9E+3	2E+4	8E-6	3E-8	1E-4	1E-3
		W, see ^{93m}Tc	-	2E+4	1E-5	3E-8	-	-
43	Technetium-95m		D, see ^{93m}Tc	4E+3	5E+3	2E-6	8E-9	5E-55E-4
		W, see ^{93m}Tc	-	2E+3	8E-7	3E-9	-	-
43	Technetium-95	D, see ^{93m}Tc	1E+4	2E+4	9E-6	3E-8	1E-4	1E-3
		W, see ^{93m}Tc	-	2E+4	8E-6	3E-8	-	-
43	Technetium-96m[2]		D, see ^{93m}Tc	2E+5	3E+5	1E-4	4E-7	2E-32E-2
		W, see ^{93m}Tc	-	2E+5	1E-4	3E-7	-	-
43	Technetium-96	D, see ^{93m}Tc	2E+3	3E+3	1E-6	5E-9	3E-5	3E-4
		W, see ^{93m}Tc	-	2E+3	9E-7	3E-9	-	-
43	Technetium-97m		D, see ^{93m}Tc	5E+3	7E+3	3E-6	-	6E-56E-4
			St wall -	(7E+3)	-	1E-8	-	-
		W, see ^{93m}Tc	-	1E+3	5E-7	2E-9	-	-
43	Technetium-97	D, see ^{93m}Tc	4E+4	5E+4	2E-5	7E-8	5E-4	5E-3
		W, see ^{93m}Tc	-	6E+3	2E-6	8E-9	-	-
43	Technetium-98	D, see ^{93m}Tc	1E+3	2E+3	7E-7	2E-9	1E-5	1E-4
		W, see ^{93m}Tc	-	3E+2	1E-7	4E-10	-	-
43	Technetium-99m		D, see ^{93m}Tc	8E+4	2E+5	6E-5	2E-7	1E-31E-2
		W, see ^{93m}Tc	-	2E+5	1E-4	3E-7	-	-
43	Technetium-99	D, see ^{93m}Tc	4E+3	5E+3	2E-6	-	6E-5	6E-4
			-	St wall (6E+3)	-	8E-9	-	-
		W, see ^{93m}Tc	-	7E+2	3E-7	9E-10	-	-
43	Technetium-101[2]		D, see ^{93m}Tc	9E+4	3E+5	1E-4	5E-7	--
			St wall (1E+5)	-	-	-	2E-3	2E-2
		W, see ^{93m}Tc	-	4E+5	2E-4	5E-7	-	-
43	Technetium-104[2]		D, see ^{93m}Tc	2E+4	7E+4	3E-5	1E-7	--
			St wall (3E+4)	-	-	-	4E-4	4E-3
		W, see ^{93m}Tc	-	9E+4	4E-5	1E-7	-	-
44	Ruthenium-94[2]	D, all compounds except those given for W and Y	2E+4	4E+4	2E-5	6E-8	2E-4	2E-3
		W, halides	-	6E+4	3E-5	9E-8	-	-

Atomic No.	Radionuclide	Class	Table I Occupational Values Col. 1 Oral Ingestion ALI (µCi)	Col. 2 Inhalation ALI (µCi)	Col. 3 Inhalation DAC (µCi/ml)	Table II Effluent Concentrations Col. 1 Air (µCi/ml)	Col. 2 Water (µCi/ml)	Table III Releases to Sewers Monthly Average Concentration (µCi/ml)
		Y, oxides and hydroxides	-	6E+4	2E-5	8E-8	-	-
44	Ruthenium-97	D, see ^{94}Ru	8E+3	2E+4	8E-6	3E-8	1E-4	1E-3
		W, see ^{94}Ru	-	1E+4	5E-6	2E-8	-	-
		Y, see ^{94}Ru	-	1E+4	5E-6	2E-8	-	-
44	Ruthenium-103	D, see ^{94}Ru	2E+3	2E+3	7E-7	2E-9	3E-5	3E-4
		W, see ^{94}Ru	-	1E+3	4E-7	1E-9	-	-
		Y, see ^{94}Ru	-	6E+2	3E-7	9E-10	-	-
44	Ruthenium-105	D, see ^{94}Ru	5E+3	1E+4	6E-6	2E-8	7E-5	7E-4
		W, see ^{94}Ru	-	1E+4	6E-6	2E-8	-	-
		Y, see ^{94}Ru	-	1E+4	5E-6	2E-8	-	-
44	Ruthenium-106	D, see ^{94}Ru	2E+2	9E+1	4E-8	1E-10	-	-
			LLI wall (2E+2)	-	-	-	3E-6	3E-5
		W, see ^{94}Ru	-	5E+1	2E-8	8E-11	-	-
		Y, see ^{94}Ru	-	1E+1	5E-9	2E-11	-	-
45	Rhodium-99m	D, all compounds except those given for W and Y	2E+4	6E+4	2E-5	8E-8	2E-4	2E-3
		W, halides	-	8E+4	3E-5	1E-7	-	-
		Y, oxides and hydroxides	-	7E+4	3E-5	9E-8	-	-
45	Rhodium-99	D, see ^{99m}Rh	2E+3	3E+3	1E-6	4E-9	3E-5	3E-4
		W, see ^{99m}Rh	-	2E+3	9E-7	3E-9	-	-
		Y, see ^{99m}Rh	-	2E+3	8E-7	3E-9	-	-
45	Rhodium-100	D, see ^{99m}Rh	2E+3	5E+3	2E-6	7E-9	2E-5	2E-4
		W, see ^{99m}Rh	-	4E+3	2E-6	6E-9	-	-
		Y, see ^{99m}Rh	-	4E+3	2E-6	5E-9	-	-
45	Rhodium-101m	D, see ^{99m}Rh	6E+3	1E+4	5E-6	2E-8	8E-5	8E-4
		W, see ^{99m}Rh	-	8E+3	4E-6	1E-8	-	-
		Y, see ^{99m}Rh	-	8E+3	3E-6	1E-8	-	-
45	Rhodium-101	D, see ^{99m}Rh	2E+3	5E+2	2E-7	7E-10	3E-5	3E-4
		W, see ^{99m}Rh	-	8E+2	3E-7	1E-9	-	-
		Y, see ^{99m}Rh	-	2E+2	6E-8	2E-10	-	-
45	Rhodium-102m	D, see ^{99m}Rh	1E+3	5E+2	2E-7	7E-10	-	-
			LLI wall (1E+3)	-	-	-	2E-5	2E-4
		W, see ^{99m}Rh	-	4E+2	2E-7	5E-10	-	-
		Y, see ^{99m}Rh	-	1E+2	5E-8	2E-10	-	-
45	Rhodium-102	D, see ^{99m}Rh	6E+2	9E+1	4E-8	1E-10	8E-6	8E-5
		W, see ^{99m}Rh	-	2E+2	7E-8	2E-10	-	-
		Y, see ^{99m}Rh	-	6E+1	2E-8	8E-11	-	-
45	Rhodium-103m[2]		D, see ^{99m}Rh		4E+5	1E+6	5E-4	2E-66E-36E-2
		W, see ^{99m}Rh	-	1E+6	5E-4	2E-6	-	-
		Y, see ^{99m}Rh	-	1E+6	5E-4	2E-6	-	-
45	Rhodium-105	D, see ^{99m}Rh	4E+3	1E+4	5E-6	2E-8	-	-
			LLI wall (4E+3)	-	-	-	5E-5	5E-4
		W, see ^{99m}Rh	-	6E+3	3E-6	9E-9	-	-
		Y, see ^{99m}Rh	-	6E+3	2E-6	8E-9	-	-
45	Rhodium-106m	D, see ^{99m}Rh	8E+3	3E+4	1E-5	4E-8	1E-4	1E-3
		W, see ^{99m}Rh	-	4E+4	2E-5	5E-8	-	-
		Y, see ^{99m}Rh	-	4E+4	1E-5	5E-8	-	-
45	Rhodium-107[2]	D, see ^{99m}Rh	7E+4	2E+5	1E-4	3E-7	-	-
			St wall (9E+4)	-	-	-	1E-3	1E-2
		W, see ^{99m}Rh	-	3E+5	1E-4	4E-7	-	-
		Y, see ^{99m}Rh	-	3E+5	1E-4	3E-7	-	-

Atomic No.	Radionuclide	Class	Table I Occupational Values Col. 1 Oral Ingestion ALI (µCi)	Table I Occupational Values Col. 2 Inhalation ALI (µCi)	Table I Occupational Values Col. 3 Inhalation DAC (µCi/ml)	Table II Effluent Concentrations Col. 1 Air (µCi/ml)	Table II Effluent Concentrations Col. 2 Water (µCi/ml)	Table III Releases to Sewers Monthly Average Concentration (µCi/ml)
46	Palladium-100	D, all compounds except those given for W and Y	1E+3	1E+3	6E-7	2E-9	2E-5	2E-4
		W, nitrates	-	1E+3	5E-7	2E-9	-	-
		Y, oxides and hydroxides	-	1E+3	6E-7	2E-9	-	-

Atomic No.	Radionuclide	Class	Table I Occupational Values Col. 1 Oral Ingestion ALI (µCi)	Table I Occupational Values Col. 2 Inhalation ALI (µCi)	Table I Occupational Values Col. 3 Inhalation DAC (µCi/ml)	Table II Effluent Concentrations Col. 1 Air (µCi/ml)	Table II Effluent Concentrations Col. 2 Water (µCi/ml)	Table III Releases to Sewers Monthly Average Concentration (µCi/ml)
46	Palladium-101	D, see ^{100}Pd	1E+4	3E+4	1E-5	5E-8	2E-4	2E-3
		W, see ^{100}Pd	-	3E+4	1E-5	5E-8	-	-
		Y, see ^{100}Pd	-	3E+4	1E-5	4E-8	-	-
46	Palladium-103	D, see ^{100}Pd	6E+3	6E+3	3E-6	9E-9	-	-
			LLI wall (7E+3)	-	-	-	1E-4	1E-3
		W, see ^{100}Pd	-	4E+3	2E-6	6E-9	-	-
		Y, see ^{100}Pd	-	4E+3	1E-6	5E-9	-	-
46	Palladium-107	D, see ^{100}Pd	3E+4	2E+4	9E-6	-	-	-
			LLI wall (4E+4)	Kidneys (2E+4)	-	3E-8	5E-4	5E-3
		W, see ^{100}Pd	-	7E+3	3E-6	1E-8	-	-
		Y, see ^{100}Pd	-	4E+2	2E-7	6E-10	-	-
46	Palladium-109	D, see ^{100}Pd	2E+3	6E+3	3E-6	9E-9	3E-5	3E-4
		W, see ^{100}Pd	-	5E+3	2E-6	8E-9	-	-
		Y, see ^{100}Pd	-	5E+3	2E-6	6E-9	-	-
47	Silver-102[2]	D, all compounds except those given for W and Y	5E+4	2E+5	8E-5	2E-7	-	-
			St wall (6E+4)	-	-	-	9E-4	9E-3
		W, nitrates and sulfides	-	2E+5	9E-5	3E-7	-	-
		Y, oxides and hydroxides	-	2E+5	8E-5	3E-7	-	-
47	Silver-103[2]	D, see ^{102}Ag	4E+4	1E+5	4E-5	1E-7	5E-4	5E-3
		W, see ^{102}Ag	-	1E+5	5E-5	2E-7	-	-
		Y, see ^{102}Ag	-	1E+5	5E-5	2E-7	-	-
47	Silver-104m[2]	D, see ^{102}Ag	3E+4	9E+4	4E-5	1E-7	4E-4	4E-3
		W, see ^{102}Ag	-	1E+5	5E-5	2E-7	-	-
		Y, see ^{102}Ag	-	1E+5	5E-5	2E-7	-	-
47	Silver-104[2]	D, see ^{102}Ag	2E+4	7E+4	3E-5	1E-7	3E-4	3E-3
		W, see ^{102}Ag	-	1E+5	6E-5	2E-7	-	-
		Y, see ^{102}Ag	-	1E+5	6E-5	2E-7	-	-
47	Silver-105	D, see ^{102}Ag	3E+3	1E+3	4E-7	1E-9	4E-5	4E-4
		W, see ^{102}Ag	-	2E+3	7E-7	2E-9	-	-
		Y, see ^{102}Ag	-	2E+3	7E-7	2E-9	-	-
47	Silver-106m	D, see ^{102}Ag	8E+2	7E+2	3E-7	1E-9	1E-5	1E-4
		W, see ^{102}Ag	-	9E+2	4E-7	1E-9	-	-
		Y, see ^{102}Ag	-	9E+2	4E-7	1E-9	-	-
47	Silver-106[2]	D, see ^{102}Ag	6E+4	2E+5	8E-5	3E-7	-	-
			St wall (6E+4)	-	-	-	9E-4	9E-3
		W, see ^{102}Ag	-	2E+5	9E-5	3E-7	-	-
		Y, see ^{102}Ag	-	2E+5	8E-5	3E-7	-	-
47	Silver-108m	D, see ^{102}Ag	6E+2	2E+2	8E-8	3E-10	9E-6	9E-5
		W, see ^{102}Ag	-	3E+2	1E-7	4E-10	-	-
		Y, see ^{102}Ag	-	2E+1	1E-8	3E-11	-	-
47	Silver-110m	D, see ^{102}Ag	5E+2	1E+2	5E-8	2E-10	6E-6	6E-5
		W, see ^{102}Ag	-	2E+2	8E-8	3E-10	-	-
		Y, see ^{102}Ag	-	9E+1	4E-8	1E-10	-	-
47	Silver-111	D, see ^{102}Ag	9E+2	2E+3	6E-7	-	-	-
			LLI wall (1E+3)	Liver (2E+3)	-	2E-9	2E-5	2E-4
		W, see ^{102}Ag	-	9E+2	4E-7	1E-9	-	-
		Y, see ^{102}Ag	-	9E+2	4E-7	1E-9	-	-
47	Silver-112	D, see ^{102}Ag	3E+3	8E+3	3E-6	1E-8	4E-5	4E-4
		W, see ^{102}Ag	-	1E+4	4E-6	1E-8	-	-
		Y, see ^{102}Ag	-	9E+3	4E-6	1E-8	-	-

Atomic Radionuclide No.	Class	Table I Occupational Values			Table II Effluent Concentrations		Table III Releases to Sewers
		Col. 1 Oral Ingestion	Col. 2 Inhalation	Col. 3	Col. 1	Col. 2	
		ALI (µCi)	ALI (µCi)	DAC (µCi/ml)	Air (µCi/ml)	Water (µCi/ml)	Monthly Average Concentration (µCi/ml)

Atomic No.	Radionuclide	Class	Table I Occupational Values Col. 1 Oral Ingestion ALI (µCi)	Table I Occupational Values Col. 2 Inhalation ALI (µCi)	Table I Occupational Values Col. 3 Inhalation DAC (µCi/ml)	Table II Effluent Concentrations Col. 1 Air (µCi/ml)	Table II Effluent Concentrations Col. 2 Water (µCi/ml)	Table III Releases to Sewers Monthly Average Concentration (µCi/ml)
47	Silver-115[2]	D, see ^{102}Ag	3E+4	9E+4	4E-5	1E-7	-	-
			St wall (3E+4)	-	-	-	4E-4	4E-3
		W, see ^{102}Ag	-	9E+4	4E-5	1E-7	-	-
		Y, see ^{102}Ag	-	8E+4	3E-5	1E-7	-	-
48	Cadmium-104[2]	D, all compounds except those given for W and Y	2E+4	7E+4	3E-5	9E-8	3E-4	3E-3
		W, sulfides, halides, and nitrates	-	1E+5	5E-5	2E-7	-	-
		Y, oxides and hydroxides	-	1E+5	5E-5	2E-7	-	-
48	Cadmium-107	D, see ^{104}Cd	2E+4	5E+4	2E-5	8E-8	3E-4	3E-3
		W, see ^{104}Cd	-	6E+4	2E-5	8E-8	-	-
		Y, see ^{104}Cd	-	5E+4	2E-5	7E-8	-	-
48	Cadmium-109	D, see ^{104}Cd	3E+2	4E+1	1E-8	-	-	-
			Kidneys (4E+2)	Kidneys (5E+1)	-	7E-11	6E-6	6E-5
		W, see ^{104}Cd	-	1E+2	5E-8	-	-	-
			-	Kidneys (1E+2)	-	2E-10	-	-
		Y, see ^{104}Cd	-	1E+2	5E-8	2E-10	-	-
48	Cadmium-113m		D, see ^{104}Cd	2E+1	2E+0	1E-9	-	--
			Kidneys (4E+1)	Kidneys (4E+0)	-	5E-12	5E-7	5E-6
		W, see ^{104}Cd	-	8E+0	4E-9	-	-	-
			-	Kidneys (1E+1)	-	2E-11	-	-
		Y, see ^{104}Cd	-	1E+1	5E-9	2E-11	-	-
48	Cadmium-113	D, see ^{104}Cd	2E+1	2E+0	9E-10	-	-	-
			Kidneys (3E+1)	Kidneys (3E+0)	-	5E-12	4E-7	4E-6
		W, see ^{104}Cd	-	8E+0	3E-9	-	-	-
			-	Kidneys (1E+1)	-	2E-11	-	-
		Y, see ^{104}Cd	-	1E+1	6E-9	2E-11	-	-
48	Cadmium-115m		D, see ^{104}Cd	3E+2	5E+1	2E-8	-	4E-64E-5
			-	Kidneys (8E+1)	-	1E-10	-	-
		W, see ^{104}Cd	-	1E+2	5E-8	2E-10	-	-
		Y, see ^{104}Cd	-	1E+2	6E-8	2E-10	-	-
48	Cadmium-115	D, see ^{104}Cd	9E+2	1E+3	6E-7	2E-9	-	-
			LLI wall (1E+3)	-	-	-	1E-5	1E-4
		W, see ^{104}Cd	-	1E+3	5E-7	2E-9	-	-
		Y, see ^{104}Cd	-	1E+3	6E-7	2E-9	-	-
48	Cadmium-117m		D, see ^{104}Cd	5E+3	1E+4	5E-6	2E-8	6E-56E-4
		W, see ^{104}Cd	-	2E+4	7E-6	2E-8	-	-
		Y, see ^{104}Cd	-	1E+4	6E-6	2E-8	-	-
48	Cadmium-117	D, see ^{104}Cd	5E+3	1E+4	5E-6	2E-8	6E-5	6E-4
		W, see ^{104}Cd	-	2E+4	7E-6	2E-8	-	-
		Y, see ^{104}Cd	-	1E+4	6E-6	2E-8	-	-
49	Indium-109	D, all compounds except those given for W	2E+4	4E+4	2E-5	6E-8	3E-4	3E-3
		W, oxides, hydroxides, halides, and nitrates	-	6E+4	3E-5	9E-8	-	-
49	Indium-110[2] (69.1 min)	D, see ^{109}In	2E+4	4E+4	2E-5	6E-8	2E-4	2E-3
		W, see ^{109}In	-	6E+4	2E-5	8E-8	-	-
49	Indium-110 (4.9 h)	D, see ^{109}In	5E+3	2E+4	7E-6	2E-8	7E-5	7E-4
		W, see ^{109}In	-	2E+4	8E-6	3E-8	-	-

Atomic Radionuclide No.	Class	Table I Occupational Values			Table II Effluent Concentrations		Table III Releases to Sewers
		Col. 1 Oral Ingestion	Col. 2 Inhalation	Col. 3	Col. 1	Col. 2	
		ALI (µCi)	ALI (µCi)	DAC (µCi/ml)	Air (µCi/ml)	Water (µCi/ml)	Monthly Average Concentration (µCi/ml)

Atomic No.	Radionuclide	Class	Table I Occupational Values Col. 1 Oral Ingestion ALI (µCi)	Table I Occupational Values Col. 2 Inhalation ALI (µCi)	Table I Occupational Values Col. 3 Inhalation DAC (µCi/ml)	Table II Effluent Concentrations Col. 1 Air (µCi/ml)	Table II Effluent Concentrations Col. 2 Water (µCi/ml)	Table III Releases to Sewers Monthly Average Concentration (µCi/ml)
49	Indium-111	D, see ^{109}In	4E+3	6E+3	3E-6	9E-9	6E-5	6E-4
		W, see ^{109}In	-	6E+3	3E-6	9E-9	-	-
49	Indium-112[2]	D, see ^{109}In	2E+5	6E+5	3E-4	9E-7	2E-3	2E-2
		W, see ^{109}In	-	7E+5	3E-4	1E-6	-	-
49	Indium-113m[2]	D, see ^{109}In	5E+4	1E+5	6E-5	2E-7	7E-4	7E-3
		W, see ^{109}In	-	2E+5	8E-5	3E-7	-	-
49	Indium-114m	D, see ^{109}In	3E+2	6E+1	3E-8	9E-11	-	-
			LLI wall (4E+2)	-	-	-	5E-6	5E-5
		W, see ^{109}In	-	1E+2	4E-8	1E-10	-	-
49	Indium-115m	D, see ^{109}In	1E+4	4E+4	2E-5	6E-8	2E-4	2E-3
		W, see ^{109}In	-	5E+4	2E-5	7E-8	-	-
49	Indium-115	D, see ^{109}In	4E+1	1E+0	6E-10	2E-12	5E-7	5E-6
		W, see ^{109}In	-	5E+0	2E-9	8E-12	-	-
49	Indium-116m[2]	D, see ^{109}In	2E+4	8E+4	3E-5	1E-7	3E-4	3E-3
		W, see ^{109}In	-	1E+5	5E-5	2E-7	-	-
49	Indium-117m[2]	D, see ^{109}In	1E+4	3E+4	1E-5	5E-8	2E-4	2E-3
		W, see ^{109}In	-	4E+4	2E-5	6E-8	-	-
49	Indium-117[2]	D, see ^{109}In	6E+4	2E+5	7E-5	2E-7	8E-4	8E-3
		W, see ^{109}In	-	2E+5	9E-5	3E-7	-	-
49	Indium-119m[2]	D, see ^{109}In	4E+4	1E+5	5E-5	2E-7	-	-
			St wall (5E+4)	-	-	-	7E-4	7E-3
		W, see ^{109}In	-	1E+5	6E-5	2E-7	-	-
50	Tin-110	D, all compounds except those given for W	4E+3	1E+4	5E-6	2E-8	5E-5	5E-4
		W, sulfides, oxides, hydroxides, halides, nitrates, and stannic phosphate	-	1E+4	5E-6	2E-8	-	-
50	Tin-111[2]	D, see ^{110}Sn	7E+4	2E+5	9E-5	3E-7	1E-3	1E-2
		W, see ^{110}Sn	-	3E+5	1E-4	4E-7	-	-
50	Tin-113	D, see ^{110}Sn	2E+3	1E+3	5E-7	2E-9	-	-
			LLI wall (2E+3)	-	-	-	3E-5	3E-4
		W, see ^{110}Sn	-	5E+2	2E-7	8E-10	-	-
50	Tin-117m	D, see ^{110}Sn	2E+3	1E+3	5E-7	-	-	-
			LLI wall (2E+3)	Bone surf (2E+3)	-	3E-9	3E-5	3E-4
		W, see ^{110}Sn	-	1E+3	6E-7	2E-9	-	-
50	Tin-119m	D, see ^{110}Sn	3E+3	2E+3	1E-6	3E-9	-	-
			LLI wall (4E+3)	-	-	-	6E-5	6E-4
		W, see ^{110}Sn	-	1E+3	4E-7	1E-9	-	-
50	Tin-121m	D, see ^{110}Sn	3E+3	9E+2	4E-7	1E-9	-	-
			LLI wall (4E+3)	-	-	-	5E-5	5E-4
		W, see ^{110}Sn	-	5E+2	2E-7	8E-10	-	-
50	Tin-121	D, see ^{110}Sn	6E+3	2E+4	6E-6	2E-8	-	-
			LLI wall (6E+3)	-	-	-	8E-5	8E-4
		W, see ^{110}Sn	-	1E+4	5E-6	2E-8	-	-
50	Tin-123m[2]	D, see ^{110}Sn	5E+4	1E+5	5E-5	2E-7	7E-4	7E-3

Atomic Radionuclide No.	Class	Table I Occupational Values Col. 1 Oral Ingestion ALI (µCi)	Col. 2 Inhalation ALI (µCi)	Col. 3 Inhalation DAC (µCi/ml)	Table II Effluent Concentrations Col. 1 Air (µCi/ml)	Col. 2 Water (µCi/ml)	Table III Releases to Sewers Monthly Average Concentration (µCi/ml)
	W, see ^{110}Sn	-	1E+5	6E-5	2E-7	-	-

Atomic No.	Radionuclide	Class	Table I Occupational Values Col. 1 Oral Ingestion ALI (µCi)	Col. 2 Inhalation ALI (µCi)	Col. 3 Inhalation DAC (µCi/ml)	Table II Effluent Concentrations Col. 1 Air (µCi/ml)	Col. 2 Water (µCi/ml)	Table III Releases to Sewers Monthly Average Concentration (µCi/ml)
50	Tin-123	D, see ^{110}Sn	5E+2	6E+2	3E-7	9E-10	-	-
			LLI wall (6E+2)	-	-	-	9E-6	9E-5
		W, see ^{110}Sn	-	2E+2	7E-8	2E-10	-	-
50	Tin-125	D, see ^{110}Sn	4E+2	9E+2	4E-7	1E-9	-	-
			LLI wall (5E+2)	-	-	-	6E-6	6E-5
		W, see ^{110}Sn	-	4E+2	1E-7	5E-10	-	-
50	Tin-126	D, see ^{110}Sn	3E+2	6E+1	2E-8	8E-11	4E-6	4E-5
		W, see ^{110}Sn	-	7E+1	3E-8	9E-11	-	-
50	Tin-127	D, see ^{110}Sn	7E+3	2E+4	8E-6	3E-8	9E-5	9E-4
		W, see ^{110}Sn	-	2E+4	8E-6	3E-8	-	-
50	Tin-128[2]	D, see ^{110}Sn	9E+3	3E+4	1E-5	4E-8	1E-4	1E-3
		W, see ^{110}Sn	-	4E+4	1E-5	5E-8	-	-
51	Antimony-115[2]	D, all compounds except those given for W	8E+4	2E+5	1E-4	3E-7	1E-3	1E-2
		W, oxides, hydroxides, halides, sulfides, sulfates, and nitrates	-	3E+5	1E-4	4E-7	-	-
51	Antimony-116m[2]		D, see ^{115}Sb	2E+4	7E+4	3E-5	1E-7	3E-43E-3
		W, see ^{115}Sb	-	1E+5	6E-5	2E-7	-	-
51	Antimony-116[2]	D, see ^{115}Sb	7E+4	3E+5	1E-4	4E-7	-	-
			St wall (9E+4)	-	-	-	1E-3	1E-2
		W, see ^{115}Sb	-	3E+5	1E-4	5E-7	-	-
51	Antimony-117	D, see ^{115}Sb	7E+4	2E+5	9E-5	3E-7	9E-4	9E-3
		W, see ^{115}Sb	-	3E+5	1E-4	4E-7	-	-
51	Antimony-118m	D, see ^{115}Sb	6E+3	2E+4	8E-6	3E-8	7E-5	7E-4
		W, see ^{115}Sb	5E+3	2E+4	9E-6	3E-8	-	-
51	Antimony-119	D, see ^{115}Sb	2E+4	5E+4	2E-5	6E-8	2E-4	2E-3
		W, see ^{115}Sb	2E+4	3E+4	1E-5	4E-8	-	-
51	Antimony-120[2] (16 min)	D, see ^{115}Sb	1E+5	4E+5	2E-4	6E-7	-	-
			St wall (2E+5)	-	-	-	2E-3	2E-2
		W, see ^{115}Sb	-	5E+5	2E-4	7E-7	-	-
51	Antimony-120 (5.76 d)	D, see ^{115}Sb	1E+3	2E+3	9E-7	3E-9	1E-5	1E-4
		W, see ^{115}Sb	9E+2	1E+3	5E-7	2E-9	-	-
51	Antimony-122	D, see ^{115}Sb	8E+2	2E+3	1E-6	3E-9	-	-
			LLI wall (8E+2)	-	-	-	1E-5	1E-4
		W, see ^{115}Sb	7E+2	1E+3	4E-7	2E-9	-	-
51	Antimony-124m[2]		D, see ^{115}Sb	3E+5	8E+5	4E-4	1E-6	3E-33E-2
		W, see ^{115}Sb	2E+5	6E+5	2E-4	8E-7	-	-
51	Antimony-124	D, see ^{115}Sb	6E+2	9E+2	4E-7	1E-9	7E-6	7E-5
		W, see ^{115}Sb	5E+2	2E+2	1E-7	3E-10	-	-
51	Antimony-125	D, see ^{115}Sb	2E+3	2E+3	1E-6	3E-9	3E-5	3E-4
		W, see ^{115}Sb	-	5E+2	2E-7	7E-10	-	-
51	Antimony-126m[2]		D, see ^{115}Sb	5E+4	2E+5	8E-5	3E-7	--
			St wall (7E+4)	-	-	-	9E-4	9E-3
		W, see ^{115}Sb	-	2E+5	8E-5	3E-7	-	-
51	Antimony-126	D, see ^{115}Sb	6E+2	1E+3	5E-7	2E-9	7E-6	7E-5

Atomic No.	Radionuclide	Class	Table I Occupational Values Col. 1 Oral Ingestion ALI (µCi)	Table I Occupational Values Col. 2 Inhalation ALI (µCi)	Table I Occupational Values Col. 3 Inhalation DAC (µCi/ml)	Table II Effluent Concentrations Col. 1 Air (µCi/ml)	Table II Effluent Concentrations Col. 2 Water (µCi/ml)	Table III Releases to Sewers Monthly Average Concentration (µCi/ml)
		W, see ^{115}Sb	5E+2	5E+2	2E-7	7E-10	-	-
51	Antimony-127	D, see ^{115}Sb	8E+2	2E+3	9E-7	3E-9	-	-
			LLI wall (8E+2)	-	-	-	1E-5	1E-4
		W, see ^{115}Sb	7E+2	9E+2	4E-7	1E-9	-	-
51	Antimony-128[2] (10.4 min)	D, see ^{115}Sb	8E+4	4E+5	2E-4	5E-7	-	-
			St wall (1E+5)	-	-	-	1E-3	1E-2
		W, see ^{115}Sb	-	4E+5	2E-4	6E-7	-	-
51	Antimony-128 (9.01 h)	D, see ^{115}Sb	1E+3	4E+3	2E-6	6E-9	2E-5	2E-4
		W, see ^{115}Sb	-	3E+3	1E-6	5E-9	-	-
51	Antimony-129	D, see ^{115}Sb	3E+3	9E+3	4E-6	1E-8	4E-5	4E-4
		W, see ^{115}Sb	-	9E+3	4E-6	1E-8	-	-
51	Antimony-130[2]	D, see ^{115}Sb	2E+4	6E+4	3E-5	9E-8	3E-4	3E-3
		W, see ^{115}Sb	-	8E+4	3E-5	1E-7	-	-
51	Antimony-131[2]	D, see ^{115}Sb	1E+4	2E+4	1E-5	-	-	-
			Thyroid (2E+4)	Thyroid (4E+4)	-	6E-8	2E-4	2E-3
		W, see ^{115}Sb	-	2E+4	1E-5		-	-
			-	Thyroid (4E+4)	-	6E-8	-	-
52	Tellurium-116	D, all compounds except those given for W	8E+3	2E+4	9E-6	3E-8	1E-4	1E-3
		W, oxides, hydroxides, and nitrates	-	3E+4	1E-5	4E-8	-	-
52	Tellurium-121m	D, see ^{116}Te	5E+2	2E+2	8E-8	-	-	-
			Bone surf (7E+2)	Bone surf (4E+2)	-	5E-10	1E-5	1E-4
		W, see ^{116}Te	-	4E+2	2E-7	6E-10	-	-
52	Tellurium-121	D, see ^{116}Te	3E+3	4E+3	2E-6	6E-9	4E-5	4E-4
		W, see ^{116}Te	-	3E+3	1E-6	4E-9	-	-
52	Tellurium-123m	D, see ^{116}Te	6E+2	2E+2	9E-8	-	-	-
			Bone surf (1E+3)	Bone surf (5E+2)	-	8E-10	1E-5	1E-4
		W, see ^{116}Te	-	5E+2	2E-7	8E-10	-	-
52	Tellurium-123	D, see ^{116}Te	5E+2	2E+2	8E-8	-	-	-
			Bone surf (1E+3)	Bone surf (5E+2)	-	7E-10	2E-5	2E-4
		W, see ^{116}Te	-	4E+2	2E-7	-	-	-
			-	Bone surf (1E+3)	-	2E-9	-	-
52	Tellurium-125m	D, see ^{116}Te	1E+3	4E+2	2E-7	-	-	-
			Bone surf (1E+3)	Bone surf (1E+3)	-	1E-9	2E-5	2E-4
		W, see ^{116}Te	-	7E+2	3E-7	1E-9	-	-
52	Tellurium-127m	D, see ^{116}Te	6E+2	3E+2	1E-7	-	9E-6	9E-5
			-	Bone surf (4E+2)	-	6E-10	-	-
		W, see ^{116}Te	-	3E+2	1E-7	4E-10	-	-
52	Tellurium-127	D, see ^{116}Te	7E+3	2E+4	9E-6	3E-8	1E-4	1E-3
		W, see ^{116}Te	-	2E+4	7E-6	2E-8	-	-
52	Tellurium-129m	D, see ^{116}Te	5E+2	6E+2	3E-7	9E-10	7E-6	7E-5
		W, see ^{116}Te	-	2E+2	1E-7	3E-10	-	-

Atomic No.	Radionuclide	Class	Table I Occupational Values Col. 1 Oral Ingestion ALI (µCi)	Table I Occupational Values Col. 2 Inhalation ALI (µCi)	Table I Occupational Values Col. 3 Inhalation DAC (µCi/ml)	Table II Effluent Concentrations Col. 1 Air (µCi/ml)	Table II Effluent Concentrations Col. 2 Water (µCi/ml)	Table III Releases to Sewers Monthly Average Concentration (µCi/ml)
52	Tellurium-129[2]	D, see ^{116}Te	3E+4	6E+4	3E-5	9E-8	4E-4	4E-3
		W, see ^{116}Te	-	7E+4	3E-5	1E-7	-	-

Atomic No.	Radionuclide	Class	Table I Occupational Values Col. 1 Oral Ingestion ALI (µCi)	Table I Occupational Values Col. 2 Inhalation ALI (µCi)	Table I Occupational Values Col. 3 Inhalation DAC (µCi/ml)	Table II Effluent Concentrations Col. 1 Air (µCi/ml)	Table II Effluent Concentrations Col. 2 Water (µCi/ml)	Table III Releases to Sewers Monthly Average Concentration (µCi/ml)
52	Tellurium-131m	D, see ^{116}Te	3E+2	4E+2	2E-7	-	-	-
			Thyroid (6E+2)	Thyroid (1E+3)	-	2E-9	8E-6	8E-5
		W, see ^{116}Te	-	4E+2	2E-7	-	-	-
			-	Thyroid (9E+2)	-	1E-9	-	-
52	Tellurium-131[2]	D, see ^{116}Te	3E+3	5E+3	2E-6	-	-	-
			Thyroid (6E+3)	Thyroid (1E+4)	-	2E-8	8E-5	8E-4
		W, see ^{116}Te	-	5E+3	2E-6	-	-	-
			-	Thyroid (1E+4)	-	2E-8	-	-
52	Tellurium-132	D, see ^{116}Te	2E+2	2E+2	9E-8	-	-	-
			Thyroid (7E+2)	Thyroid (8E+2)	-	1E-9	9E-6	9E-5
		W, see ^{116}Te	-	2E+2	9E-8	-	-	-
			-	Thyroid (6E+2)	-	9E-10	-	-
52	Tellurium-133m[2]		D, see ^{116}Te	3E+3	5E+3	2E-6	-	--
			Thyroid (6E+3)	Thyroid (1E+4)	-	2E-8	9E-5	9E-4
		W, see ^{116}Te	-	5E+3	2E-6	-	-	-
			-	Thyroid (1E+4)	-	2E-8	-	-
52	Tellurium-133[2]	D, see ^{116}Te	1E+4	2E+4	9E-6	-	-	-
			Thyroid (3E+4)	Thyroid (6E+4)	-	8E-8	4E-4	4E-3
		W, see ^{116}Te	-	2E+4	9E-6	-	-	-
			-	Thyroid (6E+4)	-	8E-8	-	-
52	Tellurium-134[2]	D, see ^{116}Te	2E+4	2E+4	1E-5	-	-	-
			Thyroid (2E+4)	Thyroid (5E+4)	-	7E-8	3E-4	3E-3
		W, see ^{116}Te	-	2E+4	1E-5	-	-	-
			-	Thyroid (5E+4)	-	7E-8	-	-
53	Iodine-120m[2]	D, all compounds	1E+4	2E+4	9E-6	3E-8	-	-
			Thyroid (1E+4)	-	-	-	2E-4	2E-3
53	Iodine-120[2]	D, all compounds	4E+3	9E+3	4E-6	-	-	-
			Thyroid (8E+3)	Thyroid (1E+4)	-	2E-8	1E-4	1E-3
53	Iodine-121	D, all compounds	1E+4	2E+4	8E-6	-	-	-
			Thyroid (3E+4)	Thyroid (5E+4)	-	7E-8	4E-4	4E-3
53	Iodine-123	D, all compounds	3E+3	6E+3	3E-6	-	-	-
			Thyroid (1E+4)	Thyroid (2E+4)	-	2E-8	1E-4	1E-3
53	Iodine-124	D, all compounds	5E+1	8E+1	3E-8	-	-	-
			Thyroid (2E+2)	Thyroid (3E+2)	-	4E-10	2E-6	2E-5
53	Iodine-125	D, all compounds	4E+1	6E+1	3E-8	-	-	-
			Thyroid (1E+2)	Thyroid (2E+2)	-	3E-10	2E-6	2E-5
53	Iodine-126	D, all compounds	2E+1	4E+1	1E-8	-	-	-
			Thyroid (7E+1)	Thyroid (1E+2)	-	2E-10	1E-6	1E-5

Atomic Radionuclide No.	Class	Table I Occupational Values			Table II Effluent Concentrations		Table III Releases to Sewers
		Col. 1 Oral Ingestion	Col. 2 Inhalation	Col. 3	Col. 1	Col. 2	
		ALI (µCi)	ALI (µCi)	DAC (µCi/ml)	Air (µCi/ml)	Water (µCi/ml)	Monthly Average Concentration (µCi/ml)

Atomic No.	Radionuclide	Class	Table I Occupational Values Col. 1 Oral Ingestion ALI (µCi)	Table I Occupational Values Col. 2 Inhalation ALI (µCi)	Table I Occupational Values Col. 3 Inhalation DAC (µCi/ml)	Table II Effluent Concentrations Col. 1 Air (µCi/ml)	Table II Effluent Concentrations Col. 2 Water (µCi/ml)	Table III Releases to Sewers Monthly Average Concentration (µCi/ml)
53	Iodine-128[2]	D, all compounds	4E+4	1E+5	5E-5	2E-7	-	-
			St wall (6E+4)	-	-	-	8E-4	8E-3
53	Iodine-129	D, all compounds	5E+0	9E+0	4E-9	-	-	-
			Thyroid (2E+1)	Thyroid (3E+1)	-	4E-11	2E-7	2E-6
53	Iodine-130	D, all compounds	4E+2	7E+2	3E-7	-	-	-
			Thyroid (1E+3)	Thyroid (2E+3)	-	3E-9	2E-5	2E-4
53	Iodine-131	D, all compounds	3E+1	5E+1	2E-8	-	-	-
			Thyroid (9E+1)	Thyroid (2E+2)	-	2E-10	1E-6	1E-5
53	Iodine-132m[2]	D, all compounds	4E+3	8E+3	4E-6	-	-	-
			Thyroid (1E+4)	Thyroid (2E+4)	-	3E-8	1E-4	1E-3
53	Iodine-132	D, all compounds	4E+3	8E+3	3E-6	-	-	-
			Thyroid (9E+3)	Thyroid (1E+4)	-	2E-8	1E-4	1E-3
53	Iodine-133	D, all compounds	1E+2	3E+2	1E-7	-	-	-
			Thyroid (5E+2)	Thyroid (9E+2)	-	1E-9	7E-6	7E-5
53	Iodine-134[2]	D, all compounds	2E+4	5E+4	2E-5	6E-8	-	-
			Thyroid (3E+4)	-	-	-	4E-4	4E-3
53	Iodine-135	D, all compounds	8E+2	2E+3	7E-7	-	-	-
			Thyroid (3E+3)	Thyroid (4E+3)	-	6E-9	3E-5	3E-4
54	Xenon-120[2]	Submersion[1]	-	-	1E-5	4E-8	-	-
54	Xenon-121[2]	Submersion[1]	-	-	2E-6	1E-8	-	-
54	Xenon-122	Submersion[1]	-	-	7E-5	3E-7	-	-
54	Xenon-123	Submersion[1]	-	-	6E-6	3E-8	-	-
54	Xenon-125	Submersion[1]	-	-	2E-5	7E-8	-	-
54	Xenon-127	Submersion[1]	-	-	1E-5	6E-8	-	-
54	Xenon-129m	Submersion[1]	-	-	2E-4	9E-7	-	-
54	Xenon-131m	Submersion[1]	-	-	4E-4	2E-6	-	-
54	Xenon-133m	Submersion[1]	-	-	1E-4	6E-7	-	-
54	Xenon-133	Submersion[1]	-	-	1E-4	5E-7	-	-
54	Xenon-135m[2]	Submersion[1]	-	-	9E-6	4E-8	-	-
54	Xenon-135	Submersion[1]	-	-	1E-5	7E-8	-	-
54	Xenon-138[2]	Submersion[1]	-	-	4E-6	2E-8	-	-
55	Cesium-125[2]	D, all compounds	5E+4	1E+5	6E-5	2E-7	-	-
			St wall (9E+4)	-	-	-	1E-3	1E-2
55	Cesium-127	D, all compounds	6E+4	9E+4	4E-5	1E-7	9E-4	9E-3
55	Cesium-129	D, all compounds	2E+4	3E+4	1E-5	5E-8	3E-4	3E-3

Atomic Radionuclide No.	Class	Table I Occupational Values			Table II Effluent Concentrations		Table III Releases to Sewers
		Col. 1 Oral Ingestion	Col. 2 Inhalation	Col. 3	Col. 1	Col. 2	
		ALI (µCi)	ALI (µCi)	DAC (µCi/ml)	Air (µCi/ml)	Water (µCi/ml)	Monthly Average Concentration (µCi/ml)

Atomic No.	Radionuclide	Class	Table I Occupational Values Col. 1 Oral Ingestion ALI (µCi)	Table I Occupational Values Col. 2 Inhalation ALI (µCi)	Table I Occupational Values Col. 3 Inhalation DAC (µCi/ml)	Table II Effluent Concentrations Col. 1 Air (µCi/ml)	Table II Effluent Concentrations Col. 2 Water (µCi/ml)	Table III Releases to Sewers Monthly Average Concentration (µCi/ml)
55	Cesium-130[2]	D, all compounds	6E+4	2E+5	8E-5	3E-7	-	-
			St wall (1E+5)	-	-	-	1E-3	1E-2
55	Cesium-131	D, all compounds	2E+4	3E+4	1E-5	4E-8	3E-4	3E-3
55	Cesium-132	D, all compounds	3E+3	4E+3	2E-6	6E-9	4E-5	4E-4
55	Cesium-134m	D, all compounds	1E+5	1E+5	6E-5	2E-7	-	-
			St wall (1E+5)	-	-	-	2E-3	2E-2
55	Cesium-134	D, all compounds	7E+1	1E+2	4E-8	2E-10	9E-7	9E-6
55	Cesium-135m[2]	D, all compounds	1E+5	2E+5	8E-5	3E-7	1E-3	1E-2
55	Cesium-135	D, all compounds	7E+2	1E+3	5E-7	2E-9	1E-5	1E-4
55	Cesium-136	D, all compounds	4E+2	7E+2	3E-7	9E-10	6E-6	6E-5
55	Cesium-137	D, all compounds	1E+2	2E+2	6E-8	2E-10	1E-6	1E-5
55	Cesium-138[2]	D, all compounds	2E+4	6E+4	2E-5	8E-8	-	-
			St wall (3E+4)	-	-	-	4E-4	4E-3
56	Barium-126[2]	D, all compounds	6E+3	2E+4	6E-6	2E-8	8E-5	8E-4
56	Barium-128	D, all compounds	5E+2	2E+3	7E-7	2E-9	7E-6	7E-5
56	Barium-131m[2]	D, all compounds	4E+5	1E+6	6E-4	2E-6	-	-
			St wall (5E+5)	-	-	-	7E-3	7E-2
56	Barium-131	D, all compounds	3E+3	8E+3	3E-6	1E-8	4E-5	4E-4
56	Barium-133m	D, all compounds	2E+3	9E+3	4E-6	1E-8	-	-
			LLI wall (3E+3)	-	-	-	4E-5	4E-4
56	Barium-133	D, all compounds	2E+3	7E+2	3E-7	9E-10	2E-5	2E-4
56	Barium-135m	D, all compounds	3E+3	1E+4	5E-6	2E-8	4E-5	4E-4
56	Barium-139[2]	D, all compounds	1E+4	3E+4	1E-5	4E-8	2E-4	2E-3
56	Barium-140	D, all compounds	5E+2	1E+3	6E-7	2E-9	-	-
			LLI wall (6E+2)	-	-	-	8E-6	8E-5
56	Barium-141[2]	D, all compounds	2E+4	7E+4	3E-5	1E-7	3E-4	3E-3
56	Barium-142[2]	D, all compounds	5E+4	1E+5	6E-5	2E-7	7E-4	7E-3
57	Lanthanum-131[2]		D, all compounds except					
		those given for W	5E+4	1E+5	5E-5	2E-7	6E-4	6E-3
		W, oxides and hydroxides	-	2E+5	7E-5	2E-7	-	-
57	Lanthanum-132	D, see ^{131}La	3E+3	1E+4	4E-6	1E-8	4E-5	4E-4
		W, see ^{131}La	-	1E+4	5E-6	2E-8	-	-
57	Lanthanum-135	D, see ^{131}La	4E+4	1E+5	4E-5	1E-7	5E-4	5E-3
		W, see ^{131}La	-	9E+4	4E-5	1E-7	-	-
57	Lanthanum-137	D, see ^{131}La	1E+4	6E+1	3E-8	-	2E-4	2E-3
			-	Liver (7E+1)	-	1E-10	-	-
		W, see ^{131}La	-	3E+2	1E-7	-	-	-
			-	Liver (3E+2)	-	4E-10	-	-

		Table I Occupational Values			Table II Effluent Concentrations		Table III Releases to Sewers
		Col. 1	Col. 2	Col. 3	Col. 1	Col. 2	
		Oral Ingestion	Inhalation				Monthly Average
Atomic Radionuclide No.	Class	ALI (µCi)	ALI (µCi)	DAC (µCi/ml)	Air (µCi/ml)	Water (µCi/ml)	Concentration (µCi/ml)

Atomic No.	Radionuclide	Class	Table I Occupational Values Col. 1 Oral Ingestion ALI (µCi)	Table I Occupational Values Col. 2 Inhalation ALI (µCi)	Table I Occupational Values Col. 3 Inhalation DAC (µCi/ml)	Table II Effluent Concentrations Col. 1 Air (µCi/ml)	Table II Effluent Concentrations Col. 2 Water (µCi/ml)	Table III Releases to Sewers Monthly Average Concentration (µCi/ml)
57	Lanthanum-138	D, see ^{131}La	9E+2	4E+0	1E-9	5E-12	1E-5	1E-4
		W, see ^{131}La	-	1E+1	6E-9	2E-11	-	-
57	Lanthanum-140	D, see ^{131}La	6E+2	1E+3	6E-7	2E-9	9E-6	9E-5
		W, see ^{131}La	-	1E+3	5E-7	2E-9	-	-
57	Lanthanum-141	D, see ^{131}La	4E+3	9E+3	4E-6	1E-8	5E-5	5E-4
		W, see ^{131}La	-	1E+4	5E-6	2E-8	-	-
57	Lanthanum-142[2]	D, see ^{131}La	8E+3	2E+4	9E-6	3E-8	1E-4	1E-3
		W, see ^{131}La	-	3E+4	1E-5	5E-8	-	-
57	Lanthanum-143[2]	D, see ^{131}La	4E+4	1E+5	4E-5	1E-7	--	
		St wall	(4E+4)	-	-	-	5E-4	5E-3
		W, see ^{131}La	-	9E+4	4E-5	1E-7	-	-
58	Cerium-134	W, all compounds except those given for Y	5E+2	7E+2	3E-7	1E-9	-	-
		LLI wall	(6E+2)	-	-	-	8E-6	8E-5
		Y, oxides, hydroxides, and fluorides	-	7E+2	3E-7	9E-10	-	-
58	Cerium-135	W, see ^{134}Ce	2E+3	4E+3	2E-6	5E-9	2E-5	2E-4
		Y, see ^{134}Ce	-	4E+3	1E-6	5E-9	-	-
58	Cerium-137m	W, see ^{134}Ce	2E+3	4E+3	2E-6	6E-9	-	-
		LLI wall	(2E+3)	-	-	-	3E-5	3E-4
		Y, see ^{134}Ce	-	4E+3	2E-6	5E-9	-	-
58	Cerium-137	W, see ^{134}Ce	5E+4	1E+5	6E-5	2E-7	7E-4	7E-3
		Y, see ^{134}Ce	-	1E+5	5E-5	2E-7	-	-
58	Cerium-139	W, see ^{134}Ce	5E+3	8E+2	3E-7	1E-9	7E-5	7E-4
		Y, see ^{134}Ce	-	7E+2	3E-7	9E-10	-	-
58	Cerium-141	W, see ^{134}Ce	2E+3	7E+2	3E-7	1E-9	-	-
		LLI wall	(2E+3)	-	-	-	3E-5	3E-4
		Y, see ^{134}Ce	-	6E+2	2E-7	8E-10	-	-
58	Cerium-143	W, see ^{134}Ce	1E+3	2E+3	8E-7	3E-9	-	-
		LLI wall	(1E+3)	-	-	-	2E-5	2E-4
		Y, see ^{134}Ce	-	2E+3	7E-7	2E-9	-	-
58	Cerium-144	W, see ^{134}Ce	2E+2	3E+1	1E-8	4E-11	-	-
		LLI wall	(3E+2)	-	-	-	3E-6	3E-5
		Y, see ^{134}Ce	-	1E+1	6E-9	2E-11	-	-
59	Praseodymium-136[2]	W, all compounds except those given for Y	5E+4	2E+5	1E-4	3E-7	-	-
		St wall	(7E+4)	-	-	-	1E-3	1E-2
		Y, oxides, hydroxides, carbides, and fluorides	-	2E+5	9E-5	3E-7	-	-
59	Praseodymium-137[2]	W, see ^{136}Pr	4E+4	2E+5	6E-5	2E-7	5E-4	5E-3
		Y, see ^{136}Pr	-	1E+5	6E-5	2E-7	-	-
59	Praseodymium-138m	W, see ^{136}Pr	1E+4	5E+4	2E-5	8E-8	1E-4	1E-3
		Y, see ^{136}Pr	-	4E+4	2E-5	6E-8	-	-
59	Praseodymium-139	W, see ^{136}Pr	4E+4	1E+5	5E-5	2E-7	6E-4	6E-3
		Y, see ^{136}Pr	-	1E+5	5E-5	2E-7	-	-
59	Praseodymium-142m[2]	W, see ^{136}Pr	8E+4	2E+5	7E-5	2E-7	1E-3	1E-2

Atomic Radionuclide No.	Class	Table I Occupational Values Col. 1 Oral Ingestion ALI (µCi)	Col. 2 Inhalation ALI (µCi)	Col. 3 Inhalation DAC (µCi/ml)	Table II Effluent Concentrations Col. 1 Air (µCi/ml)	Col. 2 Water (µCi/ml)	Table III Releases to Sewers Monthly Average Concentration (µCi/ml)
	Y, see ^{136}Pr	-	1E+5	6E-5	2E-7	-	-

Atomic No.	Radionuclide	Class	Table I Occupational Values Col. 1 Oral Ingestion ALI (µCi)	Col. 2 Inhalation ALI (µCi)	Col. 3 Inhalation DAC (µCi/ml)	Table II Effluent Concentrations Col. 1 Air (µCi/ml)	Col. 2 Water (µCi/ml)	Table III Releases to Sewers Monthly Average Concentration (µCi/ml)
59	Praseodymium-142	W, see ^{136}Pr	1E+3	2E+3	9E-7	3E-9	1E-5	1E-4
		Y, see ^{136}Pr	-	2E+3	8E-7	3E-9	-	-
59	Praseodymium-143	W, see ^{136}Pr	9E+2	8E+2	3E-7	1E-9	-	-
			LLI wall (1E+3)	-	-	-	2E-5	2E-4
		Y, see ^{136}Pr	-	7E+2	3E-7	9E-10	-	-
59	Praseodymium-144[2]	W, see ^{136}Pr	3E+4	1E+5	5E-5	2E-7	-	-
			St wall (4E+4)	-	-	-	6E-4	6E-3
		Y, see ^{136}Pr	-	1E+5	5E-5	2E-7	-	-
59	Praseodymium-145	W, see ^{136}Pr	3E+3	9E+3	4E-6	1E-8	4E-5	4E-4
		Y, see ^{136}Pr	-	8E+3	3E-6	1E-8	-	-
59	Praseodymium-147[2]	W, see ^{136}Pr	5E+4	2E+5	8E-5	3E-7	-	-
			St wall (8E+4)	-	-	-	1E-3	1E-2
		Y, see ^{136}Pr	-	2E+5	8E-5	3E-7	-	-
60	Neodymium-136[2]		W, all compounds except					
		those given for Y	1E+4	6E+4	2E-5	8E-8	2E-4	2E-3
		Y, oxides, hydroxides, carbides, and fluorides	-	5E+4	2E-5	8E-8	-	-
60	Neodymium-138		W, see ^{136}Nd		2E+3	6E+3	3E-6	9E-93E-53E-4
		Y, see ^{136}Nd	-	5E+3	2E-6	7E-9	-	-
60	Neodymium-139m		W, see ^{136}Nd		5E+3	2E+4	7E-6	2E-87E-57E-4
		Y, see ^{136}Nd	-	1E+4	6E-6	2E-8	-	-
60	Neodymium-139[2]		W, see ^{136}Nd		9E+4	3E+5	1E-4	5E-71E-31E-2
		Y, see ^{136}Nd	-	3E+5	1E-4	4E-7	-	-
60	Neodymium-141		W, see ^{136}Nd		2E+5	7E+5	3E-4	1E-62E-32E-2
		Y, see ^{136}Nd	-	6E+5	3E-4	9E-7	-	-
60	Neodymium-147		W, see ^{136}Nd		1E+3	9E+2	4E-7	1E-9--
			LLI wall (1E+3)	-	-	-	2E-5	2E-4
		Y, see ^{136}Nd	-	8E+2	4E-7	1E-9	-	-
60	Neodymium-149[2]		W, see ^{136}Nd		1E+4	3E+4	1E-5	4E-81E-41E-3
		Y, see ^{136}Nd	-	2E+4	1E-5	3E-8	-	-
60	Neodymium-151[2]		W, see ^{136}Nd		7E+4	2E+5	8E-5	3E-79E-49E-3
		Y, see ^{136}Nd	-	2E+5	8E-5	3E-7	-	-
61	Promethium-141[2]		W, all compounds except					
		those given for Y	5E+4	2E+5	8E-5	3E-7	-	-
			St wall (6E+4)	-	-	-	8E-4	8E-3
		Y, oxides, hydroxides, carbides, and fluorides	-	2E+5	7E-5	2E-7	-	-
61	Promethium-143		W, see ^{141}Pm		5E+3	6E+2	2E-7	8E-107E-57E-
			4					
		Y, see ^{141}Pm	-	7E+2	3E-7	1E-9	-	-
61	Promethium-144		W, see ^{141}Pm		1E+3	1E+2	5E-8	2E-102E-52E-
			4					
		Y, see ^{141}Pm	-	1E+2	5E-8	2E-10	-	-
61	Promethium-145		W, see ^{141}Pm		1E+4	2E+2	7E-8	-1E-41E-3
			-	Bone surf (2E+2)	-	3E-10	-	-
		Y, see ^{141}Pm	-	2E+2	8E-8	3E-10	-	-

Atomic No.	Radionuclide	Class	Table I Occupational Values Col. 1 Oral Ingestion ALI (µCi)	Col. 2 Inhalation ALI (µCi)	Col. 3 Inhalation DAC (µCi/ml)	Table II Effluent Concentrations Col. 1 Air (µCi/ml)	Col. 2 Water (µCi/ml)	Table III Releases to Sewers Monthly Average Concentration (µCi/ml)
61	Promethium-146		W, see ^{141}Pm		2E+3	5E+1	2E-8	7E-112E-52E-4
		Y, see ^{141}Pm	-	4E+1	2E-8	6E-11	-	-

Atomic No.	Radionuclide	Class	Table I Occupational Values Col. 1 Oral Ingestion ALI (µCi)	Table I Occupational Values Col. 2 Inhalation ALI (µCi)	Table I Occupational Values Col. 3 Inhalation DAC (µCi/ml)	Table II Effluent Concentrations Col. 1 Air (µCi/ml)	Table II Effluent Concentrations Col. 2 Water (µCi/ml)	Table III Releases to Sewers Monthly Average Concentration (µCi/ml)
61	Promethium-147		W, see ^{141}Pm		4E+3	1E+2	5E-8	---
			LLI wall (5E+3)	Bone surf (2E+2)	-	3E-10	7E-5	7E-4
		Y, see ^{141}Pm	-	1E+2	6E-8	2E-10	-	-
61	Promethium-148m		W, see ^{141}Pm		7E+2	3E+2	1E-7	4E-101E-51E-4
		Y, see ^{141}Pm	-	3E+2	1E-7	5E-10	-	-
61	Promethium-148		W, see ^{141}Pm		4E+2	5E+2	2E-7	8E-10--
			LLI wall (5E+2)	-	-	-	7E-6	7E-5
		Y, see ^{141}Pm	-	5E+2	2E-7	7E-10	-	-
61	Promethium-149		W, see ^{141}Pm		1E+3	2E+3	8E-7	3E-9--
			LLI wall (1E+3)	-	-	-	2E-5	2E-4
		Y, see ^{141}Pm	-	2E+3	8E-7	2E-9	-	-
61	Promethium-150		W, see ^{141}Pm		5E+3	2E+4	8E-6	3E-87E-57E-4
		Y, see ^{141}Pm	-	2E+4	7E-6	2E-8	-	-
61	Promethium-151		W, see ^{141}Pm		2E+3	4E+3	1E-6	5E-92E-52E-4
		Y, see ^{141}Pm	-	3E+3	1E-6	4E-9	-	-
62	Samarium-141m[2]		W, all compounds		3E+4	1E+5	4E-5	1E-74E-44E-3
62	Samarium-141[2]	W, all compounds	5E+4	2E+5	8E-5	2E-7	-	-
			St wall (6E+4)	-	-	-	8E-4	8E-3
62	Samarium-142[2]	W, all compounds	8E+3	3E+4	1E-5	4E-8	1E-4	1E-3
62	Samarium-145	W, all compounds	6E+3	5E+2	2E-7	7E-10	8E-5	8E-4
62	Samarium-146	W, all compounds	1E+1	4E-2	1E-11	-	-	-
			Bone surf (3E+1)	Bone surf (6E-2)	-	9E-14	3E-7	3E-6
62	Samarium-147	W, all compounds	2E+1	4E-2	2E-11	-	-	-
			Bone surf (3E+1)	Bone surf (7E-2)	-	1E-13	4E-7	4E-6
62	Samarium-151	W, all compounds	1E+4	1E+2	4E-8	-	-	-
			LLI wall (1E+4)	Bone surf (2E+2)	-	2E-10	2E-4	2E-3
62	Samarium-153	W, all compounds	2E+3	3E+3	1E-6	4E-9	-	-
			LLI wall (2E+3)	-	-	-	3E-5	3E-4
62	Samarium-155[2]	W, all compounds	6E+4	2E+5	9E-5	3E-7	-	-
			St wall (8E+4)	-	-	-	1E-3	1E-2
62	Samarium-156	W, all compounds	5E+3	9E+3	4E-6	1E-8	7E-5	7E-4
63	Europium-145	W, all compounds	2E+3	2E+3	8E-7	3E-9	2E-5	2E-4
63	Europium-146	W, all compounds	1E+3	1E+3	5E-7	2E-9	1E-5	1E-4
63	Europium-147	W, all compounds	3E+3	2E+3	7E-7	2E-9	4E-5	4E-4
63	Europium-148	W, all compounds	1E+3	4E+2	1E-7	5E-10	1E-5	1E-4
63	Europium-149	W, all compounds	1E+4	3E+3	1E-6	4E-9	2E-4	2E-3
63	Europium-150 (12.62 h)	W, all compounds	3E+3	8E+3	4E-6	1E-8	4E-5	4E-4

Atomic No.	Radionuclide	Class	Table I Occupational Values Col. 1 Oral Ingestion ALI (µCi)	Table I Occupational Values Col. 2 Inhalation ALI (µCi)	Table I Occupational Values Col. 3 Inhalation DAC (µCi/ml)	Table II Effluent Concentrations Col. 1 Air (µCi/ml)	Table II Effluent Concentrations Col. 2 Water (µCi/ml)	Table III Releases to Sewers Monthly Average Concentration (µCi/ml)
63	Europium-150 (34.2 y)	W, all compounds	8E+2	2E+1	8E-9	3E-11	1E-5	1E-4
63	Europium-152m		W, all compounds		3E+3	6E+3	3E-6	9E-94E-54E-4
63	Europium-152	W, all compounds	8E+2	2E+1	1E-8	3E-11	1E-5	1E-4
63	Europium-154	W, all compounds	5E+2	2E+1	8E-9	3E-11	7E-6	7E-5
63	Europium-155	W, all compounds	4E+3	9E+1	4E-8	-	5E-5	5E-4
			-	Bone surf (1E+2)	-	2E-10	-	-
63	Europium-156	W, all compounds	6E+2	5E+2	2E-7	6E-10	8E-6	8E-5
63	Europium-157	W, all compounds	2E+3	5E+3	2E-6	7E-9	3E-5	3E-4
63	Europium-158[2]	W, all compounds	2E+4	6E+4	2E-5	8E-8	3E-4	3E-3
64	Gadolinium-145[2]		D, all compounds except					
		those given for W	5E+4	2E+5	6E-5	2E-7	-	-
			St wall (5E+4)	-	-	-	6E-4	6E-3
		W, oxides, hydroxides, and fluorides	-	2E+5	7E-5	2E-7	-	-
64	Gadolinium-146		D, see ^{145}Gd	1E+3	1E+2	5E-8	2E-10	2E-52E-4
		W, see ^{145}Gd	-	3E+2	1E-7	4E-10	-	-
64	Gadolinium-147		D, see ^{145}Gd	2E+3	4E+3	2E-6	6E-9	3E-53E-4
		W, see ^{145}Gd	-	4E+3	1E-6	5E-9	-	-
64	Gadolinium-148		D, see ^{145}Gd	1E+1	8E+3	3E-12	-	--
			Bone surf (2E+1)	Bone surf (2E-2)	-	2E-14	3E-7	3E-6
		W, see ^{145}Gd	-	3E-2	1E-11	-	-	-
			-	Bone surf (6E-2)	-	8E-14	-	-
64	Gadolinium-149		D, see ^{145}Gd	3E+3	2E+3	9E-7	3E-9	4E-54E-4
		W, see ^{145}Gd	-	2E+3	1E-6	3E-9	-	-
64	Gadolinium-151		D, see ^{145}Gd	6E+3	4E+2	2E-7	-	9E-59E-4
			-	Bone surf (6E+2)	-	9E-10	-	-
		W, see ^{145}Gd	-	1E+3	5E-7	2E-9	-	-
64	Gadolinium-152		D, see ^{145}Gd	2E+1	1E-2	4E-12	-	--
			Bone surf (3E+1)	Bone surf (2E-2)	-	3E-14	4E-7	4E-6
		W, see ^{145}Gd	-	4E-2	2E-11	-	-	-
			-	Bone surf (8E-2)	-	1E-13	-	-
64	Gadolinium-153		D, see ^{145}Gd	5E+3	1E+2	6E-8	-	6E-56E-4
			-	Bone surf (2E+2)	-	3E-10	-	-
		W, see ^{145}Gd	-	6E+2	2E-7	8E-10	-	-
64	Gadolinium-159		D, see ^{145}Gd	3E+3	8E+3	3E-6	1E-8	4E-54E-4
		W, see ^{145}Gd	-	6E+3	2E-6	8E-9	-	-
65	Terbium-147[2]	W, all compounds	9E+3	3E+4	1E-5	5E-8	1E-4	1E-3
65	Terbium-149	W, all compounds	5E+3	7E+2	3E-7	1E-9	7E-5	7E-4
65	Terbium-150	W, all compounds	5E+3	2E+4	9E-6	3E-8	7E-5	7E-4
65	Terbium-151	W, all compounds	4E+3	9E+3	4E-6	1E-8	5E-5	5E-4

Atomic No.	Radionuclide	Class	Table I Occupational Values Col. 1 Oral Ingestion ALI (µCi)	Table I Occupational Values Col. 2 Inhalation ALI (µCi)	Table I Occupational Values Col. 3 Inhalation DAC (µCi/ml)	Table II Effluent Concentrations Col. 1 Air (µCi/ml)	Table II Effluent Concentrations Col. 2 Water (µCi/ml)	Table III Releases to Sewers Monthly Average Concentration (µCi/ml)
65	Terbium-153	W, all compounds	5E+3	7E+3	3E-6	1E-8	7E-5	7E-4
65	Terbium-154	W, all compounds	2E+3	4E+3	2E-6	6E-9	2E-5	2E-4
65	Terbium-155	W, all compounds	6E+3	8E+3	3E-6	1E-8	8E-5	8E-4
65	Terbium-156m (5.0 h)	W, all compounds	2E+4	3E+4	1E-5	4E-8	2E-4	2E-3
65	Terbium-156m (24.4 h)	W, all compounds	7E+3	8E+3	3E-6	1E-8	1E-4	1E-3
65	Terbium-156	W, all compounds	1E+3	1E+3	6E-7	2E-9	1E-5	1E-4
65	Terbium-157	W, all compounds	5E+4	3E+2	1E-7	-	-	-
			LLI wall (5E+4)	Bone surf (6E+2)	-	8E-10	7E-4	7E-3
65	Terbium-158	W, all compounds	1E+3	2E+1	8E-9	3E-11	2E-5	2E-4
65	Terbium-160	W, all compounds	8E+2	2E+2	9E-8	3E-10	1E-5	1E-4
65	Terbium-161	W, all compounds	2E+3	2E+3	7E-7	2E-9	-	-
			LLI wall (2E+3)	-	-	-	3E-5	3E-4
66	Dysprosium-155		W, all compounds		9E+3	3E+4	1E-5	4E-81E-41E-3
66	Dysprosium-157		W, all compounds		2E+4	6E+4	3E-5	9E-83E-43E-3
66	Dysprosium-159		W, all compounds		1E+4	2E+3	1E-6	3E-92E-42E-3
66	Dysprosium-165		W, all compounds		1E+4	5E+4	2E-5	6E-82E-42E-3
66	Dysprosium-166		W, all compounds		6E+2	7E+2	3E-7	1E-9--
			LLI wall (8E+2)	-	-	-	1E-5	1E-4
67	Holmium-155[2]	W, all compounds	4E+4	2E+5	6E-5	2E-7	6E-4	6E-3
67	Holmium-157[2]	W, all compounds	3E+5	1E+6	6E-4	2E-6	4E-3	4E-2
67	Holmium-159[2]	W, all compounds	2E+5	1E+6	4E-4	1E-6	3E-3	3E-2
67	Holmium-161	W, all compounds	1E+5	4E+5	2E-4	6E-7	1E-3	1E-2
67	Holmium-162m[2]		W, all compounds		5E+4	3E+5	1E-4	4E-77E-47E-3
67	Holmium-162[2]	W, all compounds	5E+5	2E+6	1E-3	3E-6	-	-
			St wall (8E+5)	-	-	-	1E-2	1E-1
67	Holmium-164m[2]		W, all compounds		1E+5	3E+5	1E-4	4E-71E-31E-2
67	Holmium-164[2]	W, all compounds	2E+5	6E+5	3E-4	9E-7	-	-
			St wall (2E+5)	-	-	-	3E-3	3E-2
67	Holmium-166m	W, all compounds	6E+2	7E+0	3E-9	9E-12	9E-6	9E-5
67	Holmium-166	W, all compounds	9E+2	2E+3	7E-7	2E-9	-	-
			LLI wall (9E+2)	-	-	-	1E-5	1E-4
67	Holmium-167	W, all compounds	2E+4	6E+4	2E-5	8E-8	2E-4	2E-3
68	Erbium-161	W, all compounds	2E+4	6E+4	3E-5	9E-8	2E-4	2E-3
68	Erbium-165	W, all compounds	6E+4	2E+5	8E-5	3E-7	9E-4	9E-3

Atomic No.	Radionuclide	Class	Table I Occupational Values Col. 1 Oral Ingestion ALI (µCi)	Table I Occupational Values Col. 2 Inhalation ALI (µCi)	Table I Occupational Values Col. 3 Inhalation DAC (µCi/ml)	Table II Effluent Concentrations Col. 1 Air (µCi/ml)	Table II Effluent Concentrations Col. 2 Water (µCi/ml)	Table III Releases to Sewers Monthly Average Concentration (µCi/ml)
68	Erbium-169	W, all compounds	3E+3	3E+3	1E-6	4E-9	-	-
			LLI wall (4E+3)	-	-	-	5E-5	5E-4
68	Erbium-171	W, all compounds	4E+3	1E+4	4E-6	1E-8	5E-5	5E-4
68	Erbium-172	W, all compounds	1E+3	1E+3	6E-7	2E-9	-	-
			LLI wall (1E+3)	-	-	-	2E-5	2E-4
69	Thulium-162[2]	W, all compounds	7E+4	3E+5	1E-4	4E-7	-	-
			St wall (7E+4)	-	-	-	1E-3	1E-2
69	Thulium-166	W, all compounds	4E+3	1E+4	6E-6	2E-8	6E-5	6E-4
69	Thulium-167	W, all compounds	2E+3	2E+3	8E-7	3E-9	-	-
			LLI wall (2E+3)	-	-	-	3E-5	3E-4
69	Thulium-170	W, all compounds	8E+2	2E+2	9E-8	3E-10	-	-
			LLI wall (1E+3)	-	-	-	1E-5	1E-4
69	Thulium-171	W, all compounds	1E+4	3E+2	1E-7	-	-	-
			LLI wall (1E+4)	Bone surf (6E+2)	-	8E-10	2E-4	2E-3
69	Thulium-172	W, all compounds	7E+2	1E+3	5E-7	2E-9	-	-
			LLI wall (8E+2)	-	-	-	1E-5	1E-4
69	Thulium-173	W, all compounds	4E+3	1E+4	5E-6	2E-8	6E-5	6E-4
69	Thulium-175[2]	W, all compounds	7E+4	3E+5	1E-4	4E-7	-	-
			St wall (9E+4)	-	-	-	1E-3	1E-2
70	Ytterbium-162[2]	W, all compounds except those given for Y	7E+4	3E+5	1E-4	4E-7	1E-3	1E-2
		Y, oxides, hydroxides, and fluorides	-	3E+5	1E-4	4E-7	-	-
70	Ytterbium-166	W, see ^{162}Yb	1E+3	2E+3	8E-7	3E-9	2E-5	2E-4
		Y, see ^{162}Yb	-	2E+3	8E-7	3E-9	-	-
70	Ytterbium-167[2]	W, see ^{162}Yb	3E+5	8E+5	3E-4	1E-6	4E-3	4E-2
		Y, see ^{162}Yb	-	7E+5	3E-4	1E-6	-	-
70	Ytterbium-169	W, see ^{162}Yb	2E+3	8E+2	4E-7	1E-9	2E-5	2E-4
		Y, see ^{162}Yb	-	7E+2	3E-7	1E-9	-	-
70	Ytterbium-175	W, see ^{162}Yb	3E+3	4E+3	1E-6	5E-9	-	-
			LLI wall (3E+3)	-	-	-	4E-5	4E-4
		Y, see ^{162}Yb	-	3E+3	1E-6	5E-9	-	-
70	Ytterbium-177[2]	W, see ^{162}Yb	2E+4	5E+4	2E-5	7E-8	2E-4	2E-3
		Y, see ^{162}Yb	-	5E+4	2E-5	6E-8	-	-
70	Ytterbium-178[2]	W, see ^{162}Yb	1E+4	4E+4	2E-5	6E-8	2E-4	2E-3
		Y, see ^{162}Yb	-	4E+4	2E-5	5E-8	-	-
71	Lutetium-169	W, all compounds except those given for Y	3E+3	4E+3	2E-6	6E-9	3E-5	3E-4
		Y, oxides, hydroxides, and fluorides	-	4E+3	2E-6	6E-9	-	-
71	Lutetium-170	W, see ^{169}Lu	1E+3	2E+3	9E-7	3E-9	2E-5	2E-4
		Y, see ^{169}Lu	-	2E+3	8E-7	3E-9	-	-

Atomic No.	Radionuclide	Class	Table I Occupational Values Col. 1 Oral Ingestion ALI (µCi)	Col. 2 Inhalation ALI (µCi)	Col. 3 Inhalation DAC (µCi/ml)	Table II Effluent Concentrations Col. 1 Air (µCi/ml)	Col. 2 Water (µCi/ml)	Table III Releases to Sewers Monthly Average Concentration (µCi/ml)
71	Lutetium-171	W, see ^{169}Lu	2E+3	2E+3	8E-7	3E-9	3E-5	3E-4
		Y, see ^{169}Lu	-	2E+3	8E-7	3E-9	-	-
71	Lutetium-172	W, see ^{169}Lu	1E+3	1E+3	5E-7	2E-9	1E-5	1E-4
		Y, see ^{169}Lu	-	1E+3	5E-7	2E-9	-	-

Atomic No.	Radionuclide	Class	Table I Occupational Values Col. 1 Oral Ingestion ALI (µCi)	Table I Occupational Values Col. 2 Inhalation ALI (µCi)	Table I Occupational Values Col. 3 Inhalation DAC (µCi/ml)	Table II Effluent Concentrations Col. 1 Air (µCi/ml)	Table II Effluent Concentrations Col. 2 Water (µCi/ml)	Table III Releases to Sewers Monthly Average Concentration (µCi/ml)
71	Lutetium-173	W, see ^{169}Lu	5E+3	3E+2	1E-7	-	7E-5	7E-4
			-	Bone surf (5E+2)	-	6E-10	-	-
		Y, see ^{169}Lu	-	3E+2	1E-7	4E-10	-	-
71	Lutetium-174m	W, see ^{169}Lu	2E+3	2E+2	1E-7	-	-	-
			LLI wall (3E+3)	Bone surf (3E+2)	-	5E-10	4E-5	4E-4
		Y, see ^{169}Lu	-	2E+2	9E-8	3E-10	-	-
71	Lutetium-174	W, see ^{169}Lu	5E+3	1E+2	5E-8	-	7E-5	7E-4
			-	Bone surf (2E+2)	-	3E-10	-	-
		Y, see ^{169}Lu	-	2E+2	6E-8	2E-10	-	-
71	Lutetium-176m	W, see ^{169}Lu	8E+3	3E+4	1E-5	3E-8	1E-4	1E-3
		Y, see ^{169}Lu	-	2E+4	9E-6	3E-8	-	-
71	Lutetium-176	W, see ^{169}Lu	7E+2	5E+0	2E-9	-	1E-5	1E-4
			-	Bone surf (1E+1)	-	2E-11	-	-
		Y, see ^{169}Lu	-	8E+0	3E-9	1E-11	-	-
71	Lutetium-177m	W, see ^{169}Lu	7E+2	1E+2	5E-8	-	1E-5	1E-4
			-	Bone surf (1E+2)	-	2E-10	-	-
		Y, see ^{169}Lu	-	8E+1	3E-8	1E-10	-	-
71	Lutetium-177	W, see ^{169}Lu	2E+3	2E+3	9E-7	3E-9	-	-
			LLI wall (3E+3)	-	-	-	4E-5	4E-4
		Y, see ^{169}Lu	-	2E+3	9E-7	3E-9	-	-
71	Lutetium-178m[2]	W, see ^{169}Lu	5E+4	2E+5	8E-5	3E-7	-	-
			St wall (6E+4)	-	-	-	8E-4	8E-3
		Y, see ^{169}Lu	-	2E+5	7E-5	2E-7	-	-
71	Lutetium-178[2]	W, see ^{169}Lu	4E+4	1E+5	5E-5	2E-7	-	-
			St wall (4E+4)	-	-	-	6E-4	6E-3
		Y, see ^{169}Lu	-	1E+5	5E-5	2E-7	-	-
71	Lutetium-179	W, see ^{169}Lu	6E+3	2E+4	8E-6	3E-8	9E-5	9E-4
		Y, see ^{169}Lu	-	2E+4	6E-6	3E-8	-	-
72	Hafnium-170	D, all compounds except those given for W	3E+3	6E+3	2E-6	8E-9	4E-5	4E-4
		W, oxides, hydroxides, carbides, and nitrates	-	5E+3	2E-6	6E-9	-	-
72	Hafnium-172	D, see ^{170}Hf	1E+3	9E+0	4E-9	-	2E-5	2E-4
			-	Bone surf (2E+1)	-	3E-11	-	-
		W, see ^{170}Hf	-	4E+1	2E-8	-	-	-
			-	Bone surf (6E+1)	-	8E-11	-	-
72	Hafnium-173	D, see ^{170}Hf	5E+3	1E+4	5E-6	2E-8	7E-5	7E-4
		W, see ^{170}Hf	-	1E+4	5E-6	2E-8	-	-
72	Hafnium-175	D, see ^{170}Hf	3E+3	9E+2	4E-7	-	4E-5	4E-4
			-	Bone surf (1E+3)	-	1E-9	-	-
		W, see ^{170}Hf	-	1E+3	5E-7	2E-9	-	-
72	Hafnium-177m[2]	D, see ^{170}Hf	2E+4	6E+4	2E-5	8E-8	3E-4	3E-3
		W, see ^{170}Hf	-	9E+4	4E-5	1E-7	-	-

Atomic No.	Radionuclide	Class	Table I Occupational Values Col. 1 Oral Ingestion ALI (µCi)	Table I Occupational Values Col. 2 Inhalation ALI (µCi)	Table I Occupational Values Col. 3 Inhalation DAC (µCi/ml)	Table II Effluent Concentrations Col. 1 Air (µCi/ml)	Table II Effluent Concentrations Col. 2 Water (µCi/ml)	Table III Releases to Sewers Monthly Average Concentration (µCi/ml)
72	Hafnium-178m	D, see ^{170}Hf	3E+2	1E+0	5E-10	-	3E-6	3E-5
			-	Bone surf (2E+0)	-	3E-12	-	-
		W, see ^{170}Hf	-	5E+0	2E-9	-	-	-
			-	Bone surf (9E+0)	-	1E-11	-	-
72	Hafnium-179m	D, see ^{170}Hf	1E+3	3E+2	1E-7	-	1E-5	1E-4
			-	Bone surf (6E+2)	-	8E-10	-	-
		W, see ^{170}Hf	-	6E+2	3E-7	8E-10	-	-
72	Hafnium-180m	D, see ^{170}Hf	7E+3	2E+4	9E-6	3E-8	1E-4	1E-3
		W, see ^{170}Hf	-	3E+4	1E-5	4E-8	-	-
72	Hafnium-181	D, see ^{170}Hf	1E+3	2E+2	7E-8	-	2E-5	2E-4
			-	Bone surf (4E+2)	-	6E-10	-	-
		W, see ^{170}Hf	-	4E+2	2E-7	6E-10	-	-
72	Hafnium-182m[2]	D, see ^{170}Hf	4E+4	9E+4	4E-5	1E-7	5E-4	5E-3
		W, see ^{170}Hf	-	1E+5	6E-5	2E-7	-	-
72	Hafnium-182	D, see ^{170}Hf	2E+2	8E-1	3E-10	-	-	-
			Bone surf (4E+2)	Bone surf (2E+0)	-	2E-12	5E-6	5E-5
		W, see ^{170}Hf	-	3E+0	1E-9	-	-	-
			-	Bone surf (7E+0)	-	1E-11	-	-
72	Hafnium-183[2]	D, see ^{170}Hf	2E+4	5E+4	2E-5	6E-8	3E-4	3E-3
		W, see ^{170}Hf	-	6E+4	2E-5	8E-8	-	-
72	Hafnium-184	D, see ^{170}Hf	2E+3	8E+3	3E-6	1E-8	3E-5	3E-4
		W, see ^{170}Hf	-	6E+3	3E-6	9E-9	-	-
73	Tantalum-172[2]	W, all compounds except those given for Y	4E+4	1E+5	5E-5	2E-7	5E-4	5E-3
		Y, elemental Ta, oxides, hydroxides, halides, carbides, nitrates, and nitrides	-	1E+5	4E-5	1E-7	-	-
73	Tantalum-173	W, see ^{172}Ta	7E+3	2E+4	8E-6	3E-8	9E-5	9E-4
		Y, see ^{172}Ta	-	2E+4	7E-6	2E-8	-	-
73	Tantalum-174[2]	W, see ^{172}Ta	3E+4	1E+5	4E-5	1E-7	4E-4	4E-3
		Y, see ^{172}Ta	-	9E+4	4E-5	1E-7	-	-
73	Tantalum-175	W, see ^{172}Ta	6E+3	2E+4	7E-6	2E-8	8E-5	8E-4
		Y, see ^{172}Ta	-	1E+4	6E-6	2E-8	-	-
73	Tantalum-176	W, see ^{172}Ta	4E+3	1E+4	5E-6	2E-8	5E-5	5E-4
		Y, see ^{172}Ta	-	1E+4	5E-6	2E-8	-	-
73	Tantalum-177	W, see ^{172}Ta	1E+4	2E+4	8E-6	3E-8	2E-4	2E-3
		Y, see ^{172}Ta	-	2E+4	7E-6	2E-8	-	-
73	Tantalum-178	W, see ^{172}Ta	2E+4	9E+4	4E-5	1E-7	2E-4	2E-3
		Y, see ^{172}Ta	-	7E+4	3E-5	1E-7	-	-
73	Tantalum-179	W, see ^{172}Ta	2E+4	5E+3	2E-6	8E-9	3E-4	3E-3
		Y, see ^{172}Ta	-	9E+2	4E-7	1E-9	-	-
73	Tantalum-180m	W, see ^{172}Ta	2E+4	7E+4	3E-5	9E-8	3E-4	3E-3
		Y, see ^{172}Ta	-	6E+4	2E-5	8E-8	-	-
73	Tantalum-180	W, see ^{172}Ta	1E+3	4E+2	2E-7	6E-10	2E-5	2E-4
		Y, see ^{172}Ta	-	2E+1	1E-8	3E-11	-	-

Atomic Radionuclide No.	Class	Table I Occupational Values			Table II Effluent Concentrations		Table III Releases to Sewers
		Col. 1 Oral Ingestion	Col. 2 Inhalation	Col. 3	Col. 1	Col. 2	
		ALI (µCi)	ALI (µCi)	DAC (µCi/ml)	Air (µCi/ml)	Water (µCi/ml)	Monthly Average Concentration (µCi/ml)

Atomic No.	Radionuclide	Class	Table I Occupational Values Col. 1 Oral Ingestion ALI (µCi)	Table I Occupational Values Col. 2 Inhalation ALI (µCi)	Table I Occupational Values Col. 3 Inhalation DAC (µCi/ml)	Table II Effluent Concentrations Col. 1 Air (µCi/ml)	Table II Effluent Concentrations Col. 2 Water (µCi/ml)	Table III Releases to Sewers Monthly Average Concentration (µCi/ml)
73	Tantalum-182m[2]		W, see ^{172}Ta		2E+5	5E+5	2E-4	8E-7--
			St wall (2E+5)	-	-	-	3E-3	3E-2
		Y, see ^{172}Ta	-	4E+5	2E-4	6E-7	-	-
73	Tantalum-182	W, see ^{172}Ta	8E+2	3E+2	1E-7	5E-10	1E-5	1E-4
		Y, see ^{172}Ta	-	1E+2	6E-8	2E-10	-	-
73	Tantalum-183	W, see ^{172}Ta	9E+2	1E+3	5E-7	2E-9	-	-
			LLI wall (1E+3)	-	-	-	2E-5	2E-4
		Y, see ^{172}Ta	-	1E+3	4E-7	1E-9	-	-
73	Tantalum-184	W, see ^{172}Ta	2E+3	5E+3	2E-6	8E-9	3E-5	3E-4
		Y, see ^{172}Ta	-	5E+3	2E-6	7E-9	-	-
73	Tantalum-185[2]	W, see ^{172}Ta	3E+4	7E+4	3E-5	1E-7	4E-4	4E-3
		Y, see ^{172}Ta	-	6E+4	3E-5	9E-8	-	-
73	Tantalum-186[2]	W, see ^{172}Ta	5E+4	2E+5	1E-4	3E-7	-	-
			St wall (7E+4)	-	-	-	1E-3	1E-2
		Y, see ^{172}Ta	-	2E+5	9E-5	3E-7	-	-
74	Tungsten-176	D, all compounds	1E+4	5E+4	2E-5	7E-8	1E-4	1E-3
74	Tungsten-177	D, all compounds	2E+4	9E+4	4E-5	1E-7	3E-4	3E-3
74	Tungsten-178	D, all compounds	5E+3	2E+4	8E-6	3E-8	7E-5	7E-4
74	Tungsten-179[2]	D, all compounds	5E+5	2E+6	7E-4	2E-6	7E-3	7E-2
74	Tungsten-181	D, all compounds	2E+4	3E+4	1E-5	5E-8	2E-4	2E-3
74	Tungsten-185	D, all compounds	2E+3	7E+3	3E-6	9E-9	-	-
			LLI wall (3E+3)	-	-	-	4E-5	4E-4
74	Tungsten-187	D, all compounds	2E+3	9E+3	4E-6	1E-8	3E-5	3E-4
74	Tungsten-188	D, all compounds	4E+2	1E+3	5E-7	2E-9	-	-
			LLI wall (5E+2)	-	-	-	7E-6	7E-5
75	Rhenium-177[2]	D, all compounds except those given for W	9E+4	3E+5	1E-4	4E-7	-	-
			St wall (1E+5)	-	-	-	2E-3	2E-2
		W, oxides, hydroxides, and nitrates	-	4E+5	1E-4	5E-7	-	-
75	Rhenium-178[2]	D, see ^{177}Re	7E+4	3E+5	1E-4	4E-7	-	-
			St wall (1E+5)	-	-	-	1E-3	1E-2
		W, see ^{177}Re	-	3E+5	1E-4	4E-7	-	-
75	Rhenium-181	D, see ^{177}Re	5E+3	9E+3	4E-6	1E-8	7E-5	7E-4
		W, see ^{177}Re	-	9E+3	4E-6	1E-8	-	-
75	Rhenium-182 (12.7 h)	D, see ^{177}Re	7E+3	1E+4	5E-6	2E-8	9E-5	9E-4
		W, see ^{177}Re	-	2E+4	6E-6	2E-8	-	-
75	Rhenium-182 (64.0 h)	D, see ^{177}Re	1E+3	2E+3	1E-6	3E-9	2E-5	2E-4
		W, see ^{177}Re	-	2E+3	9E-7	3E-9	-	-
75	Rhenium-184m	D, see ^{177}Re	2E+3	3E+3	1E-6	4E-9	3E-5	3E-4
		W, see ^{177}Re	-	4E+2	2E-7	6E-10	-	-
75	Rhenium-184	D, see ^{177}Re	2E+3	4E+3	1E-6	5E-9	3E-5	3E-4
		W, see ^{177}Re	-	1E+3	6E-7	2E-9	-	-

		Table I Occupational Values			Table II Effluent Concentrations		Table III Releases to Sewers
		Col. 1	Col. 2	Col. 3	Col. 1	Col. 2	
		Oral Ingestion	Inhalation				Monthly Average
Atomic Radionuclide No.	Class	ALI (µCi)	ALI (µCi)	DAC (µCi/ml)	Air (µCi/ml)	Water (µCi/ml)	Concentration (µCi/ml)

Atomic No.	Radionuclide	Class	Table I Occupational Values Col. 1 Oral Ingestion ALI (µCi)	Table I Occupational Values Col. 2 Inhalation ALI (µCi)	Table I Occupational Values Col. 3 Inhalation DAC (µCi/ml)	Table II Effluent Concentrations Col. 1 Air (µCi/ml)	Table II Effluent Concentrations Col. 2 Water (µCi/ml)	Table III Releases to Sewers Monthly Average Concentration (µCi/ml)
75	Rhenium-186m	D, see ^{177}Re	1E+3	2E+3	7E-7	-	-	-
			St wall (2E+3)	St wall (2E+3)	-	3E-9	2E-5	2E-4
		W, see ^{177}Re	-	2E+2	6E-8	2E-10	-	-
75	Rhenium-186	D, see ^{177}Re	2E+3	3E+3	1E-6	4E-9	3E-5	3E-4
		W, see ^{177}Re	-	2E+3	7E-7	2E-9	-	-
75	Rhenium-187	D, see ^{177}Re	6E+5	8E+5	4E-4	-	8E-3	8E-2
			-	St wall (9E+5)	-	1E-6	-	-
		W, see ^{177}Re	-	1E+5	4E-5	1E-7	-	-
75	Rhenium-188m[2]		D, see ^{177}Re	8E+4	1E+5	6E-5	2E-7	1E-31E-2
		W, see ^{177}Re	-	1E+5	6E-5	2E-7	-	-
75	Rhenium-188	D, see ^{177}Re	2E+3	3E+3	1E-6	4E-9	2E-5	2E-4
		W, see ^{177}Re	-	3E+3	1E-6	4E-9	-	-
75	Rhenium-189	D, see ^{177}Re	3E+3	5E+3	2E-6	7E-9	4E-5	4E-4
		W, see ^{177}Re	-	4E+3	2E-6	6E-9	-	-
76	Osmium-180[2]	D, all compounds except those given for W and Y	1E+5	4E+5	2E-4	5E-7	1E-3	1E-2
		W, halides and nitrates	-	5E+5	2E-4	7E-7	-	-
		Y, oxides and hydroxides	-	5E+5	2E-4	6E-7	-	-
76	Osmium-181[2]	D, see ^{180}Os	1E+4	4E+4	2E-5	6E-8	2E-4	2E-3
		W, see ^{180}Os	-	5E+4	2E-5	6E-8	-	-
		Y, see ^{180}Os	-	4E+4	2E-5	6E-8	-	-
76	Osmium-182	D, see ^{180}Os	2E+3	6E+3	2E-6	8E-9	3E-5	3E-4
		W, see ^{180}Os	-	4E+3	2E-6	6E-9	-	-
		Y, see ^{180}Os	-	4E+3	2E-6	6E-9	-	-
76	Osmium-185	D, see ^{180}Os	2E+3	5E+2	2E-7	7E-10	3E-5	3E-4
		W, see ^{180}Os	-	8E+2	3E-7	1E-9	-	-
		Y, see ^{180}Os	-	8E+2	3E-7	1E-9	-	-
76	Osmium-189m	D, see ^{180}Os	8E+4	2E+5	1E-4	3E-7	1E-3	1E-2
		W, see ^{180}Os	-	2E+5	9E-5	3E-7	-	-
		Y, see ^{180}Os	-	2E+5	7E-5	2E-7	-	-
76	Osmium-191m	D, see ^{180}Os	1E+4	3E+4	1E-5	4E-8	2E-4	2E-3
		W, see ^{180}Os	-	2E+4	8E-6	3E-8	-	-
		Y, see ^{180}Os	-	2E+4	7E-6	2E-8	-	-
76	Osmium-191	D, see ^{180}Os	2E+3	2E+3	9E-7	3E-9	-	-
			LLI wall (3E+3)	-	-	-	3E-5	3E-4
		W, see ^{180}Os	-	2E+3	7E-7	2E-9	-	-
		Y, see ^{180}Os	-	1E+3	6E-7	2E-9	-	-
76	Osmium-193	D, see ^{180}Os	2E+3	5E+3	2E-6	6E-9	-	-
			LLI wall (2E+3)	-	-	-	2E-5	2E-4
		W, see ^{180}Os	-	3E+3	1E-6	4E-9	-	-
		Y, see ^{180}Os	-	3E+3	1E-6	4E-9	-	-
76	Osmium-194	D, see ^{180}Os	4E+2	4E+1	2E-8	6E-11	-	-
			LLI wall (6E+2)	-	-	-	8E-6	8E-5
		W, see ^{180}Os	-	6E+1	2E-8	8E-11	-	-
		Y, see ^{180}Os	-	8E+0	3E-9	1E-11	-	-
77	Iridium-182[2]	D, all compounds except those given for W and Y	4E+4	1E+5	6E-5	2E-7	-	-
			St wall (4E+4)	-	-	-	6E-4	6E-3
		W, halides, nitrates,						

Atomic No.	Radionuclide	Class	Table I Occupational Values Col. 1 Oral Ingestion ALI (µCi)	Col. 2 Inhalation ALI (µCi)	Col. 3 Inhalation DAC (µCi/ml)	Table II Effluent Concentrations Col. 1 Air (µCi/ml)	Col. 2 Water (µCi/ml)	Table III Releases to Sewers Monthly Average Concentration (µCi/ml)
		and metallic iridium	-	2E+5	6E-5	2E-7	-	-
		Y, oxides and hydroxides	-	1E+5	5E-5	2E-7	-	-
77	Iridium-184	D, see ^{182}Ir	8E+3	2E+4	1E-5	3E-8	1E-4	1E-3
		W, see ^{182}Ir	-	3E+4	1E-5	5E-8	-	-
		Y, see ^{182}Ir	-	3E+4	1E-5	4E-8	-	-
77	Iridium-185	D, see ^{182}Ir	5E+3	1E+4	5E-6	2E-8	7E-5	7E-4
		W, see ^{182}Ir	-	1E+4	5E-6	2E-8	-	-
		Y, see ^{182}Ir	-	1E+4	4E-6	1E-8	-	-
77	Iridium-186	D, see ^{182}Ir	2E+3	8E+3	3E-6	1E-8	3E-5	3E-4
		W, see ^{182}Ir	-	6E+3	3E-6	9E-9	-	-
		Y, see ^{182}Ir	-	6E+3	2E-6	8E-9	-	-
77	Iridium-187	D, see ^{182}Ir	1E+4	3E+4	1E-5	5E-8	1E-4	1E-3
		W, see ^{182}Ir	-	3E+4	1E-5	4E-8	-	-
		Y, see ^{182}Ir	-	3E+4	1E-5	4E-8	-	-
77	Iridium-188	D, see ^{182}Ir	2E+3	5E+3	2E-6	6E-9	3E-5	3E-4
		W, see ^{182}Ir	-	4E+3	1E-6	5E-9	-	-
		Y, see ^{182}Ir	-	3E+3	1E-6	5E-9	-	-
77	Iridium-189	D, see ^{182}Ir	5E+3	5E+3	2E-6	7E-9	-	-
			LLI wall (5E+3)	-	-	-	7E-5	7E-4
		W, see ^{182}Ir	-	4E+3	2E-6	5E-9	-	-
		Y, see ^{182}Ir	-	4E+3	1E-6	5E-9	-	-
77	Iridium-190m[2]	D, see ^{182}Ir	2E+5	2E+5	8E-5	3E-7	2E-3	2E-2
		W, see ^{182}Ir	-	2E+5	9E-5	3E-7	-	-
		Y, see ^{182}Ir	-	2E+5	8E-5	3E-7	-	-
77	Iridium-190	D, see ^{182}Ir	1E+3	9E+2	4E-7	1E-9	1E-5	1E-4
		W, see ^{182}Ir	-	1E+3	4E-7	1E-9	-	-
		Y, see ^{182}Ir	-	9E+2	4E-7	1E-9	-	-
77	Iridium-192m	D, see ^{182}Ir	3E+3	9E+1	4E-8	1E-10	4E-5	4E-4
		W, see ^{182}Ir	-	2E+2	9E-8	3E-10	-	-
		Y, see ^{182}Ir	-	2E+1	6E-9	2E-11	-	-
77	Iridium-192	D, see ^{182}Ir	9E+2	3E+2	1E-7	4E-10	1E-5	1E-4
		W, see ^{182}Ir	-	4E+2	2E-7	6E-10	-	-
		Y, see ^{182}Ir	-	2E+2	9E-8	3E-10	-	-
77	Iridium-194m	D, see ^{182}Ir	6E+2	9E+1	4E-8	1E-10	9E-6	9E-5
		W, see ^{182}Ir	-	2E+2	7E-8	2E-10	-	-
		Y, see ^{182}Ir	-	1E+2	4E-8	1E-10	-	-
77	Iridium-194	D, see ^{182}Ir	1E+3	3E+3	1E-6	4E-9	1E-5	1E-4
		W, see ^{182}Ir	-	2E+3	9E-7	3E-9	-	-
		Y, see ^{182}Ir	-	2E+3	8E-7	3E-9	-	-
77	Iridium-195m	D, see ^{182}Ir	8E+3	2E+4	1E-5	3E-8	1E-4	1E-3
		W, see ^{182}Ir	-	3E+4	1E-5	4E-8	-	-
		Y, see ^{182}Ir	-	2E+4	9E-6	3E-8	-	-
77	Iridium-195	D, see ^{182}Ir	1E+4	4E+4	2E-5	6E-8	2E-4	2E-3
		W, see ^{182}Ir	-	5E+4	2E-5	7E-8	-	-
		Y, see ^{182}Ir	-	4E+4	2E-5	6E-8	-	-
78	Platinum-186	D, all compounds	1E+4	4E+4	2E-5	5E-8	2E-4	2E-3
78	Platinum-188	D, all compounds	2E+3	2E+3	7E-7	2E-9	2E-5	2E-4
78	Platinum-189	D, all compounds	1E+4	3E+4	1E-5	4E-8	1E-4	1E-3
78	Platinum-191	D, all compounds	4E+3	8E+3	4E-6	1E-8	5E-5	5E-4
78	Platinum-193m	D, all compounds	3E+3	6E+3	3E-6	8E-9	-	-

Atomic Radionuclide No.	Class	Table I Occupational Values Col. 1 Oral Ingestion ALI (µCi)	Col. 2 Inhalation ALI (µCi)	Col. 3 Inhalation DAC (µCi/ml)	Table II Effluent Concentrations Col. 1 Air (µCi/ml)	Col. 2 Water (µCi/ml)	Table III Releases to Sewers Monthly Average Concentration (µCi/ml)
		LLI wall (3E+4)	-	-	-	4E-5	4E-4

Atomic No.	Radionuclide	Class	Table I Occupational Values Col. 1 Oral Ingestion ALI (µCi)	Table I Occupational Values Col. 2 Inhalation ALI (µCi)	Table I Occupational Values Col. 3 Inhalation DAC (µCi/ml)	Table II Effluent Concentrations Col. 1 Air (µCi/ml)	Table II Effluent Concentrations Col. 2 Water (µCi/ml)	Table III Releases to Sewers Monthly Average Concentration (µCi/ml)
78	Platinum-193	D, all compounds	4E+4	2E+4	1E-5	3E-8	-	-
			LLI wall (5E+4)	-	-	-	6E-4	6E-3
78	Platinum-195m	D, all compounds	2E+3	4E+3	2E-6	6E-9	-	-
			LLI wall (2E+3)	-	-	-	3E-5	3E-4
78	Platinum-197m[2]	D, all compounds	2E+4	4E+4	2E-5	6E-8	2E-4	2E-3
78	Platinum-197	D, all compounds	3E+3	1E+4	4E-6	1E-8	4E-5	4E-4
78	Platinum-199[2]	D, all compounds	5E+4	1E+5	6E-5	2E-7	7E-4	7E-3
78	Platinum-200	D, all compounds	1E+3	3E+3	1E-6	5E-9	2E-5	2E-4
79	Gold-193	D, all compounds except those given for W and Y	9E+3	3E+4	1E-5	4E-8	1E-4	1E-3
		W, halides and nitrates	-	2E+4	9E-6	3E-8	-	-
		Y, oxides and hydroxides	-	2E+4	8E-6	3E-8	-	-
79	Gold-194	D, see ^{193}Au	3E+3	8E+3	3E-6	1E-8	4E-5	4E-4
		W, see ^{193}Au	-	5E+3	2E-6	8E-9	-	-
		Y, see ^{193}Au	-	5E+3	2E-6	7E-9	-	-
79	Gold-195	D, see ^{193}Au	5E+3	1E+4	5E-6	2E-8	7E-5	7E-4
		W, see ^{193}Au	-	1E+3	6E-7	2E-9	-	-
		Y, see ^{193}Au	-	4E+2	2E-7	6E-10	-	-
79	Gold-198m	D, see ^{193}Au	1E+3	3E+3	1E-6	4E-9	1E-5	1E-4
		W, see ^{193}Au	-	1E+3	5E-7	2E-9	-	-
		Y, see ^{193}Au	-	1E+3	5E-7	2E-9	-	-
79	Gold-198	D, see ^{193}Au	1E+3	4E+3	2E-6	5E-9	2E-5	2E-4
		W, see ^{193}Au	-	2E+3	8E-7	3E-9	-	-
		Y, see ^{193}Au	-	2E+3	7E-7	2E-9	-	-
79	Gold-199	D, see ^{193}Au	3E+3	9E+3	4E-6	1E-8	-	-
			LLI wall (3E+3)	-	-	-	4E-5	4E-4
		W, see ^{193}Au	-	4E+3	2E-6	6E-9	-	-
		Y, see ^{193}Au	-	4E+3	2E-6	5E-9	-	-
79	Gold-200m	D, see ^{193}Au	1E+3	4E+3	1E-6	5E-9	2E-5	2E-4
		W, see ^{193}Au	-	3E+3	1E-6	4E-9	-	-
		Y, see ^{193}Au	-	2E+4	1E-6	3E-9	-	-
79	Gold-200[2]	D, see ^{193}Au	3E+4	6E+4	3E-5	9E-8	4E-4	4E-3
		W, see ^{193}Au	-	8E+4	3E-5	1E-7	-	-
		Y, see ^{193}Au	-	7E+4	3E-5	1E-7	-	-
79	Gold-201[2]	D, see ^{193}Au	7E+4	2E+5	9E-5	3E-7	-	-
			St wall (9E+4)	-	-	-	1E-3	1E-2
		W, see ^{193}Au	-	2E+5	1E-4	3E-7	-	-
		Y, see ^{193}Au	-	2E+5	9E-5	3E-7	-	-
80	Mercury-193m	Vapor	-	8E+3	4E-6	1E-8	-	-
		Organic D	4E+3	1E+4	5E-6	2E-8	6E-5	6E-4
		D, sulfates	3E+3	9E+3	4E-6	1E-8	4E-5	4E-4
		W, oxides, hydroxides, halides, nitrates, and sulfides	-	8E+3	3E-6	1E-8	-	-
80	Mercury-193	Vapor	-	3E+4	1E-5	4E-8	-	-
		Organic D	2E+4	6E+4	3E-5	9E-8	3E-4	3E-3
		D, see ^{193m}Hg	2E+4	4E+4	2E-5	6E-8	2E-4	2E-3
		W, see ^{193m}Hg	-	4E+4	2E-5	6E-8	-	-

Atomic No.	Radionuclide	Class	Table I Occupational Values Col. 1 Oral Ingestion ALI (µCi)	Col. 2 Inhalation ALI (µCi)	Col. 3 Inhalation DAC (µCi/ml)	Table II Effluent Concentrations Col. 1 Air (µCi/ml)	Col. 2 Water (µCi/ml)	Table III Releases to Sewers Monthly Average Concentration (µCi/ml)
80	Mercury-194	Vapor	-	3E+1	1E-8	4E-11	-	-
		Organic D	2E+1	3E+1	1E-8	4E-11	2E-7	2E-6
		D, see ^{193m}Hg	8E+2	4E+1	2E-8	6E-11	1E-5	1E-4
		W, see ^{193m}Hg	-	1E+2	5E-8	2E-10	-	-
80	Mercury-195m	Vapor	-	4E+3	2E-6	6E-9	-	-
		Organic D	3E+3	6E+3	3E-6	8E-9	4E-5	4E-4
		D, see ^{193m}Hg	2E+3	5E+3	2E-6	7E-9	3E-5	3E-4
		W, see ^{193m}Hg	-	4E+3	2E-6	5E-9	-	-
80	Mercury-195	Vapor	-	3E+4	1E-5	4E-8	-	-
		Organic D	2E+4	5E+4	2E-5	6E-8	2E-4	2E-3
		D, see ^{193m}Hg	1E+4	4E+4	1E-5	5E-8	2E-4	2E-3
		W, see ^{193m}Hg	-	3E+4	1E-5	5E-8	-	-
80	Mercury-197m	Vapor	-	5E+3	2E-6	7E-9	-	-
		Organic D	4E+3	9E+3	4E-6	1E-8	5E-5	5E-4
		D, see ^{193m}Hg	3E+3	7E+3	3E-6	1E-8	4E-5	4E-4
		W, see ^{193m}Hg	-	5E+3	2E-6	7E-9	-	-
80	Mercury-197	Vapor	-	8E+3	4E-6	1E-8	-	-
		Organic D	7E+3	1E+4	6E-6	2E-8	9E-5	9E-4
		D, see ^{193m}Hg	6E+3	1E+4	5E-6	2E-8	8E-5	8E-4
		W, see ^{193m}Hg	-	9E+3	4E-6	1E-8	-	-
80	Mercury-199m[2]	Vapor	-	8E+4	3E-5	1E-7	-	-
		Organic D	6E+4	2E+5	7E-5	2E-7	-	-
			St wall (1E+5)	-	-	-	1E-3	1E-2
		D, see ^{193m}Hg	6E+4	1E+5	6E-5	2E-7	8E-4	8E-3
		W, see ^{193m}Hg	-	2E+5	7E-5	2E-7	-	-
80	Mercury-203	Vapor	-	8E+2	4E-7	1E-9	-	-
		Organic D	5E+2	8E+2	3E-7	1E-9	7E-6	7E-5
		D, see ^{193m}Hg	2E+3	1E+3	5E-7	2E-9	3E-5	3E-4
		W, see ^{193m}Hg	-	1E+3	5E-7	2E-9	-	-
81	Thallium-194m[2]	D, all compounds	5E+4	2E+5	6E-5	2E-7	-	-
			St wall (7E+4)	-	-	-	1E-3	1E-2
81	Thallium-194[2]	D, all compounds	3E+5	6E+5	2E-4	8E-7	-	-
			St wall (3E+5)	-	-	-	4E-3	4E-2
81	Thallium-195[2]	D, all compounds	6E+4	1E+5	5E-5	2E-7	9E-4	9E-3
81	Thallium-197	D, all compounds	7E+4	1E+5	5E-5	2E-7	1E-3	1E-2
81	Thallium-198m[2]	D, all compounds	3E+4	5E+4	2E-5	8E-8	4E-4	4E-3
81	Thallium-198	D, all compounds	2E+4	3E+4	1E-5	5E-8	3E-4	3E-3
81	Thallium-199	D, all compounds	6E+4	8E+4	4E-5	1E-7	9E-4	9E-3
81	Thallium-200	D, all compounds	8E+3	1E+4	5E-6	2E-8	1E-4	1E-3
81	Thallium-201	D, all compounds	2E+4	2E+4	9E-6	3E-8	2E-4	2E-3
81	Thallium-202	D, all compounds	4E+3	5E+3	2E-6	7E-9	5E-5	5E-4
81	Thallium-204	D, all compounds	2E+3	2E+3	9E-7	3E-9	2E-5	2E-4
82	Lead-195m[2]	D, all compounds	6E+4	2E+5	8E-5	3E-7	8E-4	8E-3
82	Lead-198	D, all compounds	3E+4	6E+4	3E-5	9E-8	4E-4	4E-3
82	Lead-199[2]	D, all compounds	2E+4	7E+4	3E-5	1E-7	3E-4	3E-3

Atomic No.	Radionuclide	Class	Table I Occupational Values Col. 1 Oral Ingestion ALI (µCi)	Table I Occupational Values Col. 2 Inhalation ALI (µCi)	Table I Occupational Values Col. 3 Inhalation DAC (µCi/ml)	Table II Effluent Concentrations Col. 1 Air (µCi/ml)	Table II Effluent Concentrations Col. 2 Water (µCi/ml)	Table III Releases to Sewers Monthly Average Concentration (µCi/ml)
82	Lead-200	D, all compounds	3E+3	6E+3	3E-6	9E-9	4E-5	4E-4
82	Lead-201	D, all compounds	7E+3	2E+4	8E-6	3E-8	1E-4	1E-3
82	Lead-202m	D, all compounds	9E+3	3E+4	1E-5	4E-8	1E-4	1E-3
82	Lead-202	D, all compounds	1E+2	5E+1	2E-8	7E-11	2E-6	2E-5
82	Lead-203	D, all compounds	5E+3	9E+3	4E-6	1E-8	7E-5	7E-4
82	Lead-205	D, all compounds	4E+3	1E+3	6E-7	2E-9	5E-5	5E-4
82	Lead-209	D, all compounds	2E+4	6E+4	2E-5	8E-8	3E-4	3E-3
82	Lead-210	D, all compounds	6E-1	2E-1	1E-10	-	-	-
			Bone surf (1E+0)	Bone surf (4E-1)	-	6E-13	1E-8	1E-7
82	Lead-211[2]	D, all compounds	1E+4	6E+2	3E-7	9E-10	2E-4	2E-3
82	Lead-212	D, all compounds	8E+1	3E+1	1E-8	5E-11	-	-
			Bone surf (1E+2)	-	-	-	2E-6	2E-5
82	Lead-214[2]	D, all compounds	9E+3	8E+2	3E-7	1E-9	1E-4	1E-3
83	Bismuth-200[2]	D, nitrates	3E+4	8E+4	4E-5	1E-7	4E-4	4E-3
		W, all other compounds	-	1E+5	4E-5	1E-7	-	-
83	Bismuth-201[2]	D, see ^{200}Bi	1E+4	3E+4	1E-5	4E-8	2E-4	2E-3
		W, see ^{200}Bi	-	4E+4	2E-5	5E-8	-	-
83	Bismuth-202[2]	D, see ^{200}Bi	1E+4	4E+4	2E-5	6E-8	2E-4	2E-3
		W, see ^{200}Bi	-	8E+4	3E-5	1E-7	-	-
83	Bismuth-203	D, see ^{200}Bi	2E+3	7E+3	3E-6	9E-9	3E-5	3E-4
		W, see ^{200}Bi	-	6E+3	3E-6	9E-9	-	-
83	Bismuth-205	D, see ^{200}Bi	1E+3	3E+3	1E-6	3E-9	2E-5	2E-4
		W, see ^{200}Bi	-	1E+3	5E-7	2E-9	-	-
83	Bismuth-206	D, see ^{200}Bi	6E+2	1E+3	6E-7	2E-9	9E-6	9E-5
		W, see ^{200}Bi	-	9E+2	4E-7	1E-9	-	-
83	Bismuth-207	D, see ^{200}Bi	1E+3	2E+3	7E-7	2E-9	1E-5	1E-4
		W, see ^{200}Bi	-	4E+2	1E-7	5E-10	-	-
83	Bismuth-210m	D, see ^{200}Bi	4E+1	5E+0	2E-9	-	-	-
			Kidneys (6E+1)	Kidneys (6E+0)	-	9E-12	8E-7	8E-6
		W, see ^{200}Bi	-	7E-1	3E-10	9E-13	-	-
83	Bismuth-210	D, see ^{200}Bi	8E+2	2E+2	1E-7	-	1E-5	1E-4
			-	Kidneys (4E+2)				
			-		-	5E-10	-	-
		W, see ^{200}Bi	-	3E+1	1E-8	4E-11	-	-
83	Bismuth-212[2]	D, see ^{200}Bi	5E+3	2E+2	1E-7	3E-10	7E-5	7E-4
		W, see ^{200}Bi	-	3E+2	1E-7	4E-10	-	-
83	Bismuth-213[2]	D, see ^{200}Bi	7E+3	3E+2	1E-7	4E-10	1E-4	1E-3
		W, see ^{200}Bi	-	4E+2	1E-7	5E-10	-	-
83	Bismuth-214[2]	D, see ^{200}Bi	2E+4	8E+2	3E-7	1E-9	-	-
			St wall (2E+4)	-	-	-	3E-4	3E-3
		W, see ^{200}Bi	-	9E-2	4E-7	1E-9	-	-
84	Polonium-203[2]	D, all compounds except						

Atomic No.	Radionuclide	Class	Table I Occupational Values Col. 1 Oral Ingestion ALI (µCi)	Table I Occupational Values Col. 2 Inhalation ALI (µCi)	Table I Occupational Values Col. 3 Inhalation DAC (µCi/ml)	Table II Effluent Concentrations Col. 1 Air (µCi/ml)	Table II Effluent Concentrations Col. 2 Water (µCi/ml)	Table III Releases to Sewers Monthly Average Concentration (µCi/ml)
		those given for W	3E+4	6E+4	3E-5	9E-8	3E-4	3E-3
		W, oxides, hydroxides, and nitrates	-	9E+4	4E-5	1E-7	-	-
84	Polonium-205[2]	D, see ^{203}Po	2E+4	4E+4	2E-5	5E-8	3E-4	3E-3
		W, see ^{203}Po	-	7E+4	3E-5	1E-7	-	-
84	Polonium-207	D, see ^{203}Po	8E+3	3E+4	1E-5	3E-8	1E-4	1E-3
		W, see ^{203}Po	-	3E+4	1E-5	4E-8	-	-
84	Polonium-210	D, see ^{203}Po	3E+0	6E-1	3E-10	9E-13	4E-8	4E-7
		W, see ^{203}Po	-	6E-1	3E-10	9E-13	-	-
85	Astatine-207[2]	D, halides	6E+3	3E+3	1E-6	4E-9	8E-5	8E-4
		W	-	2E+3	9E-7	3E-9	-	-
85	Astatine-211	D, halides	1E+2	8E+1	3E-8	1E-10	2E-6	2E-5
		W	-	5E+1	2E-8	8E-11	-	-
86	Radon-220	With daughters removed	-	2E+4	7E-6	2E-8	-	-
		With daughters present	-	2E+1 (or 12 WLM)	9E-9	3E-11 (or 1.0 WL) level)	-	-
86	Radon-222	With daughters removed	-	1E+4	4E-6	1E-8	-	-
		With daughters present	-	1E+2 (or 4 WLM)	3E-8 (or 0.33 WL)	1E-10 level)	-	-
87	Francium-222[2]	D, all compounds	2E+3	5E+2	2E-7	6E-10	3E-5	3E-4
87	Francium-223[2]	D, all compounds	6E+2	8E+2	3E-7	1E-9	8E-6	8E-5
88	Radium-223	W, all compounds	5E+0	7E-1	3E-10	9E-13	-	-
			Bone surf (9E+0)	-	-	-	1E-7	1E-6
88	Radium-224	W, all compounds	8E+0	2E+0	7E-10	2E-12	-	-
			Bone surf (2E+1)	-	-	-	2E-7	2E-6
88	Radium-225	W, all compounds	8E+0	7E-1	3E-10	9E-13	-	-
			Bone surf (2E+1)	-	-	-	2E-7	2E-6
88	Radium-226	W, all compounds	2E+0	6E-1	3E-10	9E-13	-	-
			Bone surf (5E+0)	-	-	-	6E-8	6E-7
88	Radium-227[2]	W, all compounds	2E+4	1E+4	6E-6	-	-	-
			Bone surf (2E+4)	Bone surf (2E+4)	-	3E-8	3E-4	3E-3
88	Radium-228	W, all compounds	2E+0	1E+0	5E-10	2E-12	-	-
			Bone surf (4E+0)	-	-	-	6E-8	6E-7
89	Actinium-224	D, all compounds except those given for W and Y	2E+3	3E+1	1E-8	-	-	-
			LLI wall (2E+3)	Bone surf (4E+1)	-	5E-11	3E-5	3E-4
		W, halides and nitrates	-	5E+1	2E-8	7E-11	-	-
		Y, oxides and hydroxides	-	5E+1	2E-8	6E-11	-	-
89	Actinium-225	D, see ^{224}Ac	5E+1	3E-1	1E-10	-	-	-
			LLI wall (5E+1)	Bone surf (5E-1)	-	7E-13	7E-7	7E-6
		W, see ^{224}Ac	-	6E-1	3E-10	9E-13	-	-

Atomic Radionuclide No.	Class	Table I Occupational Values Col. 1 Oral Ingestion ALI (µCi)	Col. 2 Inhalation ALI (µCi)	Col. 3 Inhalation DAC (µCi/ml)	Table II Effluent Concentrations Col. 1 Air (µCi/ml)	Col. 2 Water (µCi/ml)	Table III Releases to Sewers Monthly Average Concentration (µCi/ml)
	Y, see ^{224}Ac	-	6E-1	3E-10	9E-13	-	-

Atomic No.	Radionuclide	Class	Table I Occupational Values Col. 1 Oral Ingestion ALI (µCi)	Table I Occupational Values Col. 2 Inhalation ALI (µCi)	Table I Occupational Values Col. 3 Inhalation DAC (µCi/ml)	Table II Effluent Concentrations Col. 1 Air (µCi/ml)	Table II Effluent Concentrations Col. 2 Water (µCi/ml)	Table III Releases to Sewers Monthly Average Concentration (µCi/ml)
89	Actinium-226	D, see ^{224}Ac	1E+2	3E+0	1E-9	-	-	-
			LLI wall (1E+2)	Bone surf (4E+0)	-	5E-12	2E-6	2E-5
		W, see ^{224}Ac	-	5E+0	2E-9	7E-12	-	-
		Y, see ^{224}Ac	-	5E+0	2E-9	6E-12	-	-
89	Actinium-227	D, see ^{224}Ac	2E-1	4E-4	2E-13	-	-	-
			Bone surf (4E-1)	Bone surf (8E-4)	-	1E-15	5E-9	5E-8
		W, see ^{224}Ac	-	2E-3	7E-13	-	-	-
			-	Bone surf (3E-3)	-	4E-15	-	-
		Y, see ^{224}Ac	-	4E-3	2E-12	6E-15	-	-
89	Actinium-228	D, see ^{224}Ac	2E+3	9E+0	4E-9	-	3E-5	3E-4
			-	Bone surf (2E+1)	-	2E-11	-	-
		W, see ^{224}Ac	-	4E+1	2E-8	-	-	-
			-	Bone surf (6E+1)	-	8E-11	-	-
		Y, see ^{224}Ac	-	4E+1	2E-8	6E-11	-	-
90	Thorium-226[2]	W, all compounds except those given for Y	5E+3	2E+2	6E-8	2E-10	-	-
			St wall (5E+3)	-	-	-	7E-5	7E-4
		Y, oxides and hydroxides	-	1E+2	6E-8	2E-10	-	-
90	Thorium-227	W, see ^{226}Th	1E+2	3E-1	1E-10	5E-13	2E-6	2E-5
		Y, see ^{226}Th	-	3E-1	1E-10	5E-13	-	-
90	Thorium-228	W, see ^{226}Th	6E+0	1E-2	4E-12	-	-	-
			Bone surf (1E+1)	Bone surf (2E-2)	-	3E-14	2E-7	2E-6
		Y, see ^{226}Th	-	2E-2	7E-12	2E-14	-	-
90	Thorium-229	W, see ^{226}Th	6E-1	9E-4	4E-13	-	-	-
			Bone surf (1E+0)	Bone surf (2E-3)	-	3E-15	2E-8	2E-7
		Y, see ^{226}Th	-	2E-3	1E-12	-	-	-
			-	Bone surf (3E-3)	-	4E-15	-	-
90	Thorium-230	W, see ^{226}Th	4E+0	6E-3	3E-12	-	-	-
			Bone surf (9E+0)	Bone surf (2E-2)	-	2E-14	1E-7	1E-6
		Y, see ^{226}Th	-	2E-2	6E-12	-	-	-
			-	Bone surf (2E-2)	-	3E-14	-	-
90	Thorium-231	W, see ^{226}Th	4E+3	6E+3	3E-6	9E-9	5E-5	5E-4
		Y, see ^{226}Th	-	6E+3	3E-6	9E-9	-	-
90	Thorium-232	W, see ^{226}Th	7E-1	1E-3	5E-13	-	-	-
			Bone surf (2E+0)	Bone surf (3E-3)	-	4E-15	3E-8	3E-7
		Y, see ^{226}Th	-	3E-3	1E-12	-	-	-
			-	Bone surf (4E-3)	-	6E-15	-	-
90	Thorium-234	W, see ^{226}Th	3E+2	2E+2	8E-8	3E-10	-	-
			LLI wall (4E+2)	-	-	-	5E-6	5E-5
		Y, see ^{226}Th	-	2E+2	6E-8	2E-10	-	-
91	Protactinium-227[2]	W, all compounds except those given for Y	4E+3	1E+2	5E-8	2E-10	5E-5	5E-4
		Y, oxides and hydroxides	-	1E+2	4E-8	1E-10	-	-

Atomic No.	Radionuclide	Class	Table I Occupational Values Col. 1 Oral Ingestion ALI (µCi)	Table I Occupational Values Col. 2 Inhalation ALI (µCi)	Table I Occupational Values Col. 3 Inhalation DAC (µCi/ml)	Table II Effluent Concentrations Col. 1 Air (µCi/ml)	Table II Effluent Concentrations Col. 2 Water (µCi/ml)	Table III Releases to Sewers Monthly Average Concentration (µCi/ml)
91	Protactinium-228	W, see ^{227}Pa	1E+3	1E+1	5E-9	-	2E-5	2E-4
			-	Bone surf (2E+1)	-	3E-11	-	-
		Y, see ^{227}Pa	-	1E+1	5E-9	2E-11	-	-
91	Protactinium-230	W, see ^{227}Pa	6E+2	5E+0	2E-9	7E-12	-	-
			Bone surf (9E+2)	-	-	-	1E-5	1E-4
		Y, see ^{227}Pa	-	4E+0	1E-9	5E-12	-	-
91	Protactinium-231	W, see ^{227}Pa	2E-1	2E-3	6E-13	-	-	-
			Bone surf (5E-1)	Bone surf (4E-3)	-	6E-15	6E-9	6E-8
		Y, see ^{227}Pa	-	4E-3	2E-12	-	-	-
			-	Bone surf (6E-3)	-	8E-15	-	-
91	Protactinium-232	W, see ^{227}Pa	1E+3	2E+1	9E-9	-	2E-5	2E-4
			-	Bone surf (6E+1)	-	8E-11	-	-
		Y, see ^{227}Pa	-	6E+1	2E-8	-	-	-
			-	Bone surf (7E+1)	-	1E-10	-	-
91	Protactinium-233	W, see ^{227}Pa	1E+3	7E+2	3E-7	1E-9	-	-
			LLI wall (2E+3)	-	-	-	2E-5	2E-4
		Y, see ^{227}Pa	-	6E+2	2E-7	8E-10	-	-
91	Protactinium-234	W, see ^{227}Pa	2E+3	8E+3	3E-6	1E-8	3E-5	3E-4
		Y, see ^{227}Pa	-	7E+3	3E-6	9E-9	-	-
92	Uranium-230	D, UF_6, UO_2F_2, $UO_2(NO_3)_2$	4E+0	4E-1	2E-10	-	-	-
			Bone surf (6E+0)	Bone surf (6E-1)	-	8E-13	8E-8	8E-7
		W, UO_3, UF_4, UCl_4	-	4E-1	1E-10	5E-13	-	-
		Y, UO_2, U_3O_8	-	3E-1	1E-10	4E-13	-	-
92	Uranium-231	D, see ^{230}U	5E+3	8E+3	3E-6	1E-8	-	-
			LLI wall (4E+3)	-	-	-	6E-5	6E-4
		W, see ^{230}U	-	6E+3	2E-6	8E-9	-	-
		Y, see ^{230}U	-	5E+3	2E-6	6E-9	-	-
92	Uranium-232	D, see ^{230}U	2E+0	2E-1	9E-11	-	-	-
			Bone surf (4E+0)	Bone surf (4E-1)	-	6E-13	6E-8	6E-7
		W, see ^{230}U	-	4E-1	2E-10	5E-13	-	-
		Y, see ^{230}U	-	8E-3	3E-12	1E-14	-	-
92	Uranium-233	D, see ^{230}U	1E+1	1E+0	5E-10	-	-	-
			Bone surf (2E+1)	Bone surf (2E+0)	-	3E-12	3E-7	3E-6
		W, see ^{230}U	-	7E-1	3E-10	1E-12	-	-
		Y, see ^{230}U	-	4E-2	2E-11	5E-14	-	-
92	Uranium-234[3]	D, see ^{230}U	1E+1	1E+0	5E-10	-	-	-
			Bone surf (2E+1)	Bone surf (2E+0)	-	3E-12	3E-7	3E-6
		W, see ^{230}U	-	7E-1	3E-10	1E-12	-	-
		Y, see ^{230}U	-	4E-2	2E-11	5E-14	-	-
92	Uranium-235[3]	D, see ^{230}U	1E+1	1E+0	6E-10	-	-	-
			Bone surf (2E+1)	Bone surf (2E+0)	-	3E-12	3E-7	3E-6
		W, see ^{230}U	-	8E-1	3E-10	1E-12	-	-
		Y, see ^{230}U	-	4E-2	2E-11	6E-14	-	-

Atomic No.	Radionuclide	Class	Table I Occupational Values Col. 1 Oral Ingestion ALI (µCi)	Table I Occupational Values Col. 2 Inhalation ALI (µCi)	Table I Occupational Values Col. 3 Inhalation DAC (µCi/ml)	Table II Effluent Concentrations Col. 1 Air (µCi/ml)	Table II Effluent Concentrations Col. 2 Water (µCi/ml)	Table III Releases to Sewers Monthly Average Concentration (µCi/ml)
92	Uranium-236	D, see ^{230}U	1E+1	1E+0	5E-10	-	-	-
			Bone surf (2E+1)	Bone surf (2E+0)	-	3E-12	3E-7	3E-6
		W, see ^{230}U	-	8E-1	3E-10	1E-12	-	-
		Y, see ^{230}U	-	4E-2	2E-11	6E-14	-	-
92	Uranium-237	D, see ^{230}U	2E+3	3E+3	1E-6	4E-9	-	-
			LLI wall (2E+3)	-	-	-	3E-5	3E-4
		W, see ^{230}U	-	2E+3	7E-7	2E-9	-	-
		Y, see ^{230}U	-	2E+3	6E-7	2E-9	-	-
92	Uranium-238[3]	D, see ^{230}U	1E+1	1E+0	6E-10	-	-	-
			Bone surf (2E+1)	Bone surf (2E+0)	-	3E-12	3E-7	3E-6
		W, see ^{230}U	-	8E-1	3E-10	1E-12	-	-
		Y, see ^{230}U	-	4E-2	2E-11	6E-14	-	-
92	Uranium-239[2]	D, see ^{230}U	7E+4	2E+5	8E-5	3E-7	9E-4	9E-3
		W, see ^{230}U	-	2E+5	7E-5	2E-7	-	-
		Y, see ^{230}U	-	2E+5	6E-5	2E-7	-	-
92	Uranium-240	D, see ^{230}U	1E+3	4E+3	2E-6	5E-9	2E-5	2E-4
		W, see ^{230}U	-	3E+3	1E-6	4E-9	-	-
		Y, see ^{230}U	-	2E+3	1E-6	3E-9	-	-
92	Uranium-natural[3]	D, see ^{230}U	1E+1	1E+0	5E-10	-	-	-
			Bone surf (2E+1)	Bone surf (2E+0)	-	3E-12	3E-7	3E-6
		W, see ^{230}U	-	8E-1	3E-10	9E-13	-	-
		Y, see ^{230}U	-	5E-2	2E-11	9E-14	-	-
93	Neptunium-232[2]		W, all compounds		1E+5	2E+3	7E-7	-2E-32E-2
			-	Bone surf (5E+2)	-	6E-9	-	-
93	Neptunium-233[2]		W, all compounds		8E+5	3E+6	1E-3	4E-61E-21E-1
93	Neptunium-234	W, all compounds	2E+3	3E+3	1E-6	4E-9	3E-5	3E-4
93	Neptunium-235	W, all compounds	2E+4	8E+2	3E-7	-	-	-
			LLI wall (2E+4)	Bone surf (1E+3)	-	2E-9	3E-4	3E-3
93	Neptunium-236 (1.15E+5 y)	W, all compounds	3E+0	2E-2	9E-12	-	-	-
			Bone surf (6E+0)	Bone surf (5E-2)	-	8E-14	9E-8	9E-7
93	Neptunium-236 (22.5 h)	W, all compounds	3E+3	3E+1	1E-8	-	-	-
			Bone surf (4E+3)	Bone surf (7E+1)	-	1E-10	5E-5	5E-4
93	Neptunium-237	W, all compounds	5E-1	4E-3	2E-12	-	-	-
			Bone surf (1E+0)	Bone surf (1E-2)	-	1E-14	2E-8	2E-7
93	Neptunium-238	W, all compounds	1E+3	6E+1	3E-8	-	2E-5	2E-4
			-	Bone surf (2E+2)	-	2E-10	-	-
93	Neptunium-239	W, all compounds	2E+3	2E+3	9E-7	3E-9	-	-
			LLI wall (2E+3)	-	-	-	2E-5	2E-4
93	Neptunium-240[2]		W, all compounds		2E+4	8E+4	3E-5	1E-73E-43E-3
94	Plutonium-234	W, all compounds except PuO_2	8E+3	2E+2	9E-8	3E-10	1E-4	1E-3
		Y, PuO_2	-	2E+2	8E-8	3E-10	-	-

Atomic No.	Radionuclide	Class	Table I Occupational Values Col. 1 Oral Ingestion ALI (µCi)	Table I Occupational Values Col. 2 Inhalation ALI (µCi)	Table I Occupational Values Col. 3 Inhalation DAC (µCi/ml)	Table II Effluent Concentrations Col. 1 Air (µCi/ml)	Table II Effluent Concentrations Col. 2 Water (µCi/ml)	Table III Releases to Sewers Monthly Average Concentration (µCi/ml)
94	Plutonium-235[2]	W, see ^{234}Pu	9E+5	3E+6	1E-3	4E-6	1E-2	1E-1
		Y, see ^{234}Pu	-	3E+6	1E-3	3E-6	-	-
94	Plutonium-236	W, see ^{234}Pu	2E+0	2E-2	8E-12	-	-	-
			Bone surf (4E+0)	Bone surf (4E-2)	-	5E-14	6E-8	6E-7
		Y, see ^{234}Pu	-	4E-2	2E-11	6E-14	-	-
94	Plutonium-237	W, see ^{234}Pu	1E+4	3E+3	1E-6	5E-9	2E-4	2E-3
		Y, see ^{234}Pu	-	3E+3	1E-6	4E-9	-	-
94	Plutonium-238	W, see ^{234}Pu	9E-1	7E-3	3E-12	-	-	-
			Bone surf (2E+0)	Bone surf (1E-2)	-	2E-14	2E-8	2E-7
		Y, see ^{234}Pu	-	2E-2	8E-12	2E-14	-	-
94	Plutonium-239	W, see ^{234}Pu	8E-1	6E-3	3E-12	-	-	-
			Bone surf (1E+0)	Bone surf (1E-2)	-	2E-14	2E-8	2E-7
		Y, see ^{234}Pu	-	2E-2	7E-12	-	-	-
			-	Bone surf (2E-2)	-	2E-14	-	-
94	Plutonium-240	W, see ^{234}Pu	8E-1	6E-3	3E-12	-	-	-
			Bone surf (1E+0)	Bone surf (1E-2)	-	2E-14	2E-8	2E-7
		Y, see ^{234}Pu	-	2E-2	7E-12	-	-	-
			-	Bone surf (2E-2)	-	2E-14	-	-
94	Plutonium-241	W, see ^{234}Pu	4E+1	3E-1	1E-10	-	-	-
			Bone surf (7E+1)	Bone surf (6E-1)	-	8E-13	1E-6	1E-5
		Y, see ^{234}Pu	-	8E-1	3E-10	-	-	-
			-	Bone surf (1E+0)	-	1E-12	-	-
94	Plutonium-242	W, see ^{234}Pu	8E-1	7E-3	3E-12	-	-	-
			Bone surf (1E+0)	Bone surf (1E-2)	-	2E-14	2E-8	2E-7
		Y, see ^{234}Pu	-	2E-2	7E-12	-	-	-
			-	Bone surf (2E-2)	-	2E-14	-	-
94	Plutonium-243	W, see ^{234}Pu	2E+4	4E+4	2E-5	5E-8	2E-4	2E-3
		Y, see ^{234}Pu	-	4E+4	2E-5	5E-8	-	-
94	Plutonium-244	W, see ^{234}Pu	8E-1	7E-3	3E-12	-	-	-
			Bone surf (2E+0)	Bone surf (1E-2)	-	2E-14	2E-8	2E-7
		Y, see ^{234}Pu	-	2E-2	7E-12	-	-	-
			-	Bone surf (2E-2)	-	2E-14	-	-
94	Plutonium-245	W, see ^{234}Pu	2E+3	5E+3	2E-6	6E-9	3E-5	3E-4
		Y, see ^{234}Pu	-	4E+3	2E-6	6E-9	-	-
94	Plutonium-246	W, see ^{234}Pu	4E+2	3E+2	1E-7	4E-10	-	-
			LLI wall (4E+2)	-	-	-	6E-6	6E-5
		Y, see ^{234}Pu	-	3E+2	1E-7	4E-10	-	-
95	Americium-237[2]	W, all compounds	8E+4	3E+5	1E-4	4E-7	1E-3	1E-2
95	Americium-238[2]	W, all compounds	4E+4	3E+3	1E-6	-	5E-4	5E-3
			-	Bone surf (6E+3)	-	9E-9	-	-
95	Americium-239	W, all compounds	5E+3	1E+4	5E-6	2E-8	7E-5	7E-4

Atomic No.	Radionuclide	Class	Table I Occupational Values Col. 1 Oral Ingestion ALI (µCi)	Col. 2 Inhalation ALI (µCi)	Col. 3 Inhalation DAC (µCi/ml)	Table II Effluent Concentrations Col. 1 Air (µCi/ml)	Col. 2 Water (µCi/ml)	Table III Releases to Sewers Monthly Average Concentration (µCi/ml)
95	Americium-240	W, all compounds	2E+3	3E+3	1E-6	4E-9	3E-5	3E-4
95	Americium-241	W, all compounds	8E-1	6E-3	3E-12	-	-	-
			Bone surf (1E+0)	Bone surf (1E-2)	-	2E-14	2E-8	2E-7
95	Americium-242m		W, all compounds		8E-1	6E-3	3E-12	---
			Bone surf (1E+0)	Bone surf (1E-2)	-	2E-14	2E-8	2E-7
95	Americium-242	W, all compounds	4E+3	8E+1	4E-8	-	5E-5	5E-4
			-	Bone surf (9E+1)	-	1E-10	-	-
95	Americium-243	W, all compounds	8E-1	6E-3	3E-12	-	-	-
			Bone surf (1E+0)	Bone surf (1E-2)	-	2E-14	2E-8	2E-7
95	Americium-244m[2]		W, all compounds		6E+4	4E+3	2E-6	---
			St wall (8E+4)	Bone surf (7E+3)	-	1E-8	1E-3	1E-2
95	Americium-244	W, all compounds	3E+3	2E+2	8E-8	-	4E-5	4E-4
			-	Bone surf (3E+2)	-	4E-10	-	-
95	Americium-245	W, all compounds	3E+4	8E+4	3E-5	1E-7	4E-4	4E-3
95	Americium-246m[2]		W, all compounds		5E+4	2E+5	8E-5	3E-7--
			St wall (6E+4)	-	-	-	8E-4	8E-3
95	Americium-246[2]	W, all compounds	3E+4	1E+5	4E-5	1E-7	4E-4	4E-3
96	Curium-238	W, all compounds	2E+4	1E+3	5E-7	2E-9	2E-4	2E-3
96	Curium-240	W, all compounds	6E+1	6E-1	2E-10	-	-	-
			Bone surf (8E+1)	Bone surf (6E-1)	-	9E-13	1E-6	1E-5
96	Curium-241	W, all compounds	1E+3	3E+1	1E-8	-	2E-5	2E-4
			-	Bone surf (4E+1)	-	5E-11	-	-
96	Curium-242	W, all compounds	3E+1	3E-1	1E-10	-	-	-
			Bone surf (5E+1)	Bone surf (3E-1)	-	4E-13	7E-7	7E-6
96	Curium-243	W, all compounds	1E+0	9E-3	4E-12	-	-	-
			Bone surf (2E+0)	Bone surf (2E-2)	-	2E-14	3E-8	3E-7
96	Curium-244	W, all compounds	1E+0	1E-2	5E-12	-	-	-
			Bone surf (3E+0)	Bone surf (2E-2)	-	3E-14	3E-8	3E-7
96	Curium-245	W, all compounds	7E-1	6E-3	3E-12	-	-	-
			Bone surf (1E+0)	Bone surf (1E-2)	-	2E-14	2E-8	2E-7
96	Curium-246	W, all compounds	7E-1	6E-3	3E-12	-	-	-
			Bone surf (1E+0)	Bone surf (1E-2)	-	2E-14	2E-8	2E-7
96	Curium-247	W, all compounds	8E-1	6E-3	3E-12	-	-	-
			Bone surf (1E+0)	Bone surf (1E-2)	-	2E-14	2E-8	2E-7
96	Curium-248	W, all compounds	2E-1	2E-3	7E-13	-	-	-
			Bone surf	Bone surf				

Atomic No.	Radionuclide	Class	Table I Occupational Values Col. 1 Oral Ingestion ALI (µCi)	Table I Occupational Values Col. 2 Inhalation ALI (µCi)	Table I Occupational Values Col. 3 Inhalation DAC (µCi/ml)	Table II Effluent Concentrations Col. 1 Air (µCi/ml)	Table II Effluent Concentrations Col. 2 Water (µCi/ml)	Table III Releases to Sewers Monthly Average Concentration (µCi/ml)
			(4E-1)	(3E-3)	-	4E-15	5E-9	5E-8
96	Curium-249[2]	W, all compounds	5E+4	2E+4	7E-6	-	7E-4	7E-3
			-	Bone surf (3E+4)	-	4E-8	-	-

Atomic No.	Radionuclide	Class	Table I Occupational Values Col. 1 Oral Ingestion ALI (µCi)	Table I Occupational Values Col. 2 Inhalation ALI (µCi)	Table I Occupational Values Col. 3 Inhalation DAC (µCi/ml)	Table II Effluent Concentrations Col. 1 Air (µCi/ml)	Table II Effluent Concentrations Col. 2 Water (µCi/ml)	Table III Releases to Sewers Monthly Average Concentration (µCi/ml)
96	Curium-250	W, all compounds	4E-2	3E-4	1E-13	-	-	-
			Bone surf (6E-2)	Bone surf (5E-4)	-	8E-16	9E-10	9E-9
97	Berkelium-245	W, all compounds	2E+3	1E+3	5E-7	2E-9	3E-5	3E-4
97	Berkelium-246	W, all compounds	3E+3	3E+3	1E-6	4E-9	4E-5	4E-4
97	Berkelium-247	W, all compounds	5E-1	4E-3	2E-12	-	-	-
			Bone surf (1E+0)	Bone surf (9E-3)	-	1E-14	2E-8	2E-7
97	Berkelium-249	W, all compounds	2E+2	2E+0	7E-10	-	-	-
			Bone surf (5E+2)	Bone surf (4E+0)	-	5E-12	6E-6	6E-5
97	Berkelium-250	W, all compounds	9E+3	3E+2	1E-7	-	1E-4	1E-3
			-	Bone surf (7E+2)	-	1E-9	-	-
98	Californium-244[2]		W, all compounds except					
		those given for Y	3E+4	6E+2	2E-7	8E-10	-	-
			St wall (3E+4)	-	-	-	4E-4	4E-3
		Y, oxides and hydroxides	-	6E+2	2E-7	8E-10	-	-
98	Californium-246		W, see ^{244}Cf	4E+2	9E+0	4E-9	1E-11	5E-65E-5
		Y, see ^{244}Cf	-	9E+0	4E-9	1E-11	-	-
98	Californium-248		W, see ^{244}Cf	8E+0	6E-2	3E-11	-	--
			Bone surf (2E+1)	Bone surf (1E-1)	-	2E-13	2E-7	2E-6
		Y, see ^{244}Cf	-	1E-1	4E-11	1E-13	-	-
98	Californium-249		W, see ^{244}Cf	5E-1	4E-3	2E-12	-	--
			Bone surf (1E+0)	Bone surf (9E-3)	-	1E-14	2E-8	2E-7
		Y, see ^{244}Cf	-	1E-2	4E-12	-	-	-
			-	Bone surf (1E-2)	-	2E-14	-	-
98	Californium-250		W, see ^{244}Cf	1E+0	9E-3	4E-12	-	--
			Bone surf (2E+0)	Bone surf (2E-2)	-	3E-14	3E-8	3E-7
		Y, see ^{244}Cf	-	3E-2	1E-11	4E-14	-	-
98	Californium-251		W, see ^{244}Cf	5E-1	4E-3	2E-12	-	--
			Bone surf (1E+0)	Bone surf (9E-3)	-	1E-14	2E-8	2E-7
		Y, see ^{244}Cf	-	1E-2	4E-12	-	-	-
			-	Bone surf (1E-2)	-	2E-14	-	-
98	Californium-252		W, see ^{244}Cf	2E+0	2E-2	8E-12	-	--
			Bone surf (5E+0)	Bone surf (4E-2)	-	5E-14	7E-8	7E-7
		Y, see ^{244}Cf	-	3E-2	1E-11	5E-14	-	-
98	Californium-253		W, see ^{244}Cf	2E+2	2E+0	8E-10	3E-12	--
			Bone surf (4E+2)	-	-	-	5E-6	5E-5
		Y, see ^{244}Cf	-	2E+0	7E-10	2E-12	-	-
98	Californium-254		W, see ^{244}Cf	2E+0	2E-2	9E-12	3E-14	3E-83E-7
		Y, see ^{244}Cf	-	2E-2	7E-12	2E-14	-	-
99	Einsteinium-250		W, all compounds		4E+4	5E+2	2E-7	-6E-46E-3
			-	Bone surf (1E+3)	-	2E-9	-	-

		Table I Occupational Values			Table II Effluent Concentrations		Table III Releases to Sewers
		Col. 1	Col. 2	Col. 3	Col. 1	Col. 2	
		Oral Ingestion	Inhalation				Monthly Average
Atomic Radionuclide No.	Class	ALI (µCi)	ALI (µCi)	DAC (µCi/ml)	Air (µCi/ml)	Water (µCi/ml)	Concentration (µCi/ml)

Atomic No.	Radionuclide	Class	Table I Occupational Values Col. 1 Oral Ingestion ALI (µCi)	Col. 2 Inhalation ALI (µCi)	Col. 3 Inhalation DAC (µCi/ml)	Table II Effluent Concentrations Col. 1 Air (µCi/ml)	Col. 2 Water (µCi/ml)	Table III Releases to Sewers Monthly Average Concentration (µCi/ml)
99	Einsteinium-251		W, all compounds		7E+3	9E+2	4E-7	-1E-41E-3
			-	Bone surf (1E+3)	-	2E-9	-	-
99	Einsteinium-253		W, all compounds		2E+2	1E+0	6E-10	2E-122E-62E-5
99	Einsteinium-254m	W, all compounds	3E+2	1E+1	4E-9	1E-11	-	-
			LLI wall (3E+2)	-	-	-	4E-6	4E-5
99	Einsteinium-254		W, all compounds		8E+0	7E-2	3E-11	---
			Bone surf (2E+1)	Bone surf (1E-1)	-	2E-13	2E-7	2E-6
100	Fermium-252	W, all compounds	5E+2	1E+1	5E-9	2E-11	6E-6	6E-5
100	Fermium-253	W, all compounds	1E+3	1E+1	4E-9	1E-11	1E-5	1E-4
100	Fermium-254	W, all compounds	3E+3	9E+1	4E-8	1E-10	4E-5	4E-4
100	Fermium-255	W, all compounds	5E+2	2E+1	9E-9	3E-11	7E-6	7E-5
100	Fermium-257	W, all compounds	2E+1	2E-1	7E-11	-	-	-
			Bone surf (4E+1)	Bone surf (2E-1)	-	3E-13	5E-7	5E-6
101	Mendelevium-257		W, all compounds		7E+3	8E+1	4E-8	-1E-41E-3
			-	Bone surf (9E+1)	-	1E-10	-	-
101	Mendelevium-258		W, all compounds		3E+1	2E-1	1E-10	---
			Bone surf (5E+1)	Bone surf (3E-1)	-	5E-13	6E-7	6E-6
-	Any single radionuclide not listed above with decay mode other than alpha emission or spontaneous fission and with radioactive half-life less than 2 hours	Submersion[1]	-	2E+2	1E-7	1E-9	-	-
-	Any single radionuclide not listed above with decay mode other than alpha emission or spontaneous fission and with radioactive half-life greater than 2 hours		-	2E-1	1E-10	1E-12	1E-8	1E-7
-	Any single radionuclide not listed above that decays by alpha emission or spontaneous fission, or any mixture for which either the identity or the concentration of any radionuclide in the mixture is not known		-	4E-4	2E-13	1E-15	2E-9	2E-8

Atomic Radionuclide No.	Class	Table I Occupational Values Col. 1 Oral Ingestion ALI (µCi)	Table I Occupational Values Col. 2 Inhalation ALI (µCi)	Table I Occupational Values Col. 3 Inhalation DAC (µCi/ml)	Table II Effluent Concentrations Col. 1 Air (µCi/ml)	Table II Effluent Concentrations Col. 2 Water (µCi/ml)	Table III Releases to Sewers Monthly Average Concentration (µCi/ml)

FOOTNOTES:

[1]"Submersion" means that values given are for submersion in a hemispherical semi-infinite cloud of airborne material.

[2]These radionuclides have radiological half-lives of less than 2 hours. The total effective dose equivalent received during operations with these radionuclides might include a significant contribution from external exposure. The DAC values for all radionuclides, other than those designated Class "Submersion," are based upon the committed effective dose equivalent due to the intake of the radionuclide into the body and do NOT include potentially significant contributions to dose equivalent from external exposures. The licensee may substitute 1E-7 µCi/ml for the listed DAC to account for the submersion dose prospectively, but should use individual monitoring devices or other radiation measuring instruments that measure external exposure to demonstrate compliance with the limits. (See A.2.5)

[3]For soluble mixtures of U-238, U-234, and U-235 in air, chemical toxicity may be the limiting factor (see A.2.3(e)). If the percent by weight (enrichment) of U-235 is not greater than 5, the concentration value for a 40-hour workweek is 0.2 milligrams uranium per cubic meter of air average. For any enrichment, the product of the average concentration and time of exposure during a 40-hour workweek shall not exceed 8E-3 (SA) µCi-hr/ml, where SA is the specific activity of the uranium inhaled. The specific activity for natural uranium is 6.77E-7 curies per gram U. The specific activity for other mixtures of U-238, U-235, and U-234, if not known, shall be:

SA = 3.6E-7 curies/gram U U-depleted

$SA = [0.4 + 0.38 (enrichment) + 0.0034 (enrichment)^2] E-6$, enrichment $\geq$ 0.72

where enrichment is the percentage by weight of U-235, expressed as percent.

NOTE:

1. If the identity of each radionuclide in a mixture is known but the concentration of one or more of the radionuclides in the mixture is not known, the DAC for the mixture shall be the most restrictive DAC of any radionuclide in the mixture.

2. If the identity of each radionuclide in the mixture is not known, but it is known that certain radionuclides specified in this appendix are not present in the mixture, the inhalation ALI, DAC, and effluent and sewage concentrations for the mixture are the lowest values specified in this appendix for any radionuclide that is not known to be absent from the mixture; or

If it is known that Ac-227-D and Cm-250-W are not present	-	7E-4	3E-13	-	-	-
If, in addition, it is known that Ac-227-W,Y, Th-229-W,Y, Th-230-W, Th-232-W,Y, Pa-231-W,Y, Np-237-W, Pu-239-W, Pu-240-W, Pu-242-W, Am-241-W, Am-242m-W, Am-243-W, Cm-245-W, Cm-246-W, Cm-247-W, Cm-248-W, Bk-247-W, Cf-249-W, and Cf-251-Ware not present	-	7E-3	3E-12	-	-	-
If, in addition, it is known that Sm-146-W, Sm-147-W, Gd-148-D,W, Gd-152-D,W, Th-228-W,Y, Th-230-Y, U-232-Y, U-233-Y, U-234-Y, U-235-Y, U-236-Y, U-238-Y, Np-236-W, Pu-236-W,Y, Pu-238-W,Y, Pu-239-Y, Pu-240-Y, Pu-242-Y, Pu-244-W,Y, Cm-243-W, Cm-244-W, Cf-248-W, Cf-249-Y, Cf-250-W,Y, Cf-251-Y, Cf-252-W,Y, and Cf-254-W,Y are not present	-	7E-2	3E-11	-	-	-
If, in addition, it is known that Pb-210-D, Bi-210m-W, Po-210-D,W, Ra-223-W, Ra-225-W, Ra-226-W, Ac-225-D,W,Y, Th-227-W,Y, U-230-D,W,Y, U-232-D,W, Pu-241-W, Cm-240-W, Cm-242-W, Cf-248-Y, Es-254-W, Fm-257-W, and Md-258-W are not present	-	7E-1	3E-10	-	-	-
If, in addition, it is known that Si-32-Y, Ti-44-Y, Fe-60-D, Sr-90-Y, Zr-93-D, Cd-113m-D, Cd-113-D, In-115-D,W, La-138-D, Lu-176-W, Hf-178m-D,W, Hf-182-D,W, Bi-210m-D, Ra-224-W, Ra-228-W, Ac-226-D,W,Y, Pa-230-W,Y, U-233-D,W, U-234-D,W, U-235-D,W, U-236-D,W, U-238-D,W, Pu-241-Y, Bk-249-W, Cf-253-W,Y,						

Atomic Radionuclide No.	Class	Table I Occupational Values Col. 1 Oral Ingestion ALI (µCi)	Col. 2 Inhalation ALI (µCi)	Col. 3 Inhalation DAC (µCi/ml)	Table II Effluent Concentrations Col. 1 Air (µCi/ml)	Col. 2 Water (µCi/ml)	Table III Releases to Sewers Monthly Average Concentration (µCi/ml)
and Es-253-W are not present		-	7E+0	3E-9	-	-	-

Atomic Radionuclide No.	Class	Table I Occupational Values Col. 1 Oral Ingestion ALI (µCi)	Col. 2 Inhalation ALI (µCi)	Col. 3 Inhalation DAC (µCi/ml)	Table II Effluent Concentrations Col. 1 Air (µCi/ml)	Col. 2 Water (µCi/ml)	Table III Releases to Sewers Monthly Average Concentration (µCi/ml)
	If it is known that Ac-227-D,W,Y, Th-229-W,Y, Th-232-W,Y, Pa-231-W,Y, Cm-248-W, and Cm-250-W are not present	-	-	-	1E-14	-	-
	If, in addition, it is known that Sm-146-W, Gd-148-D,W, Gd-152-D, Th-228-W,Y, Th-230-W,Y, U-232-Y, U-233-Y, U-234-Y, U-235-Y, U-236-Y, U-238-Y, U-Nat-Y, Np-236-W, Np-237-W, Pu-236-W,Y, Pu-238-W,Y, Pu-239-W,Y, Pu-240-W,Y, Pu-242-W,Y, Pu-244-W,Y, Am-241-W, Am-242m-W, Am-243-W, Cm-243-W, Cm-244-W, Cm-245-W, Cm-246-W, Cm-247-W, Bk-247-W, Cf-249-W,Y, Cf-250-W,Y, Cf-251-W,Y, Cf-252-W,Y, and Cf-254-W,Y are not present	-	-	-	1E-13	-	-
	If, in addition, it is known that Sm-147-W, Gd-152-W, Pb-210-D, Bi-210m-W, Po-210-D,W, Ra-223-W, Ra-225-W, Ra-226-W, Ac-225-D,W,Y, Th-227-W,Y, U-230-D,W,Y, U-232-D,W, U-Nat-W, Pu-241-W, Cm-240-W, Cm-242-W, Cf-248-W,Y, Es-254-W, Fm-257-W, and Md-258-W are not present		-	-	1E-12	-	
	If, in addition it is known that Fe-60, Sr-90, Cd-113m, Cd-113, In-115, I-129, Cs-134, Sm-145, Sm-147, Gd-148, Gd-152, Hg-194 (organic), Bi-210m, Ra-223, Ra-224, Ra-225, Ac-225, Th-228, Th-230, U-233, U-234, U-235, U-236, U-238, U-Nat, Cm-242, Cf-248, Es-254, Fm-257, and Md-258 are not present		-	-	-	-	1E-61E-5

3. If a mixture of radionuclides consists of uranium and its daughters in ore dust (10 µm AMAD particle distribution assumed) prior to chemical separation of the uranium from the ore, the following values may be used for the DAC of the mixture: 6E-11 µCi of gross alpha activity from uranium-238, uranium-234, thorium-230, and radium-226 per milliliter of air; 3E-11 µCi of natural uranium per milliliter of air; or 45 micrograms of natural uranium per cubic meter of air.

4. If the identity and concentration of each radionuclide in a mixture are known, the limiting values should be derived as follows: determine, for each radionuclide in the mixture, the ratio between the concentration present in the mixture and the concentration otherwise established in Appendix B to this Part for the specific radionuclide when not in a mixture. The sum of such ratios for all of the radionuclides in the mixture may not exceed "1" (i.e., "unity").

Example: If radionuclides "A," "B," and "C" are present in concentrations C_A, C_B, and C_C, and if the applicable DACs are DAC_A, DAC_B, and DAC_C, respectively, then the concentrations shall be limited so that the following relationship exists:

$$\frac{C_A}{DAC_A} + \frac{C_B}{DAC_B} + \frac{C_C}{DAC_C} \leq 1$$

APPENDIX C

QUANTITIES[1] OF LICENSED MATERIAL REQUIRING LABELING

Radionuclide	Quantity (μCi)*	Radionuclide	Quantity (μCi)*
Hydrogen-3	1,000	Chromium-48	1,000
Beryllium-7	1,000	Chromium-49	1,000
Beryllium-10	1	Chromium-51	1,000
Carbon-11	1,000	Manganese-51	1,000
Carbon-14	1,000	Manganese-52m	1,000
Fluorine-18	1,000	Manganese-52	100
Sodium-22	10	Manganese-53	1,000
Sodium-24	100	Manganese-54	100
Magnesium-28	100	Manganese-56	1,000
Aluminum-26	10	Iron-52	100
Silicon-31	1,000	Iron-55	100
Silicon-32	1	Iron-59	10
Phosphorus-32	10	Iron-60	1
Phosphorus-33	100	Cobalt-55	100
Sulfur-35	100	Cobalt-56	10
Chlorine-36	10	Cobalt-57	100
Chlorine-38	1,000	Cobalt-58m	1,000
Chlorine-39	1,000	Cobalt-58	100
Argon-39	1,000	Cobalt-60m	1,000
Argon-41	1,000	Cobalt-60	1
Potassium-40	100	Cobalt-61	1,000
Potassium-42	1,000	Cobalt-62m	1,000
Potassium-43	1,000	Nickel-56	100
Potassium-44	1,000	Nickel-57	100
Potassium-45	1,000	Nickel-59	100
Calcium-41	100	Nickel-63	100
Calcium-45	100	Nickel-65	1,000
Calcium-47	100	Nickel-66	10
Scandium-43	1,000	Copper-60	1,000
Scandium-44m	100	Copper-61	1,000
Scandium-44	100	Copper-64	1,000
Scandium-46	10	Copper-67	1,000
Scandium-47	100	Zinc-62	100
Scandium-48	100	Zinc-63	1,000
Scandium-49	1,000	Zinc-65	10
Titanium-44	1	Zinc-69m	100
Titanium-45	1,000	Zinc-69	1,000
Vanadium-47	1,000	Zinc-71m	1,000
Vanadium-48	100	Zinc-72	100
Vanadium-49	1,000	Gallium-65	1,000

*To convert μCi to kBq, multiply the μCi value by 37.

T. . . . . A. . . . . ALI . . . . . T. . . . I. C. . . . . A. . . . . P. . . . . μC. . . . V. . . . . μC. . . . . E. . . . . μC. . . . . .

Radionuclide	Quantity (μCi)*	Radionuclide	Quantity (μCi)*
Gallium-66	100	Krypton-81	1,000
Gallium-67	1,000	Krypton-83m	1,000
Gallium-68	1,000	Krypton-85m	1,000
Gallium-70	1,000	Krypton-85	1,000
Gallium-72	100	Krypton-87	1,000
Gallium-73	1,000	Krypton-88	1,000
Germanium-66	1,000	Rubidium-79	1,000
Germanium-67	1,000	Rubidium-81m	1,000
Germanium-68	10	Rubidium-81	1,000
Germanium-69	1,000	Rubidium-82m	1,000
Germanium-71	1,000	Rubidium-83	100
Germanium-75	1,000	Rubidium-84	100
Germanium-77	1,000	Rubidium-86	100
Germanium-78	1,000	Rubidium-87	100
Arsenic-69	1,000	Rubidium-88	1,000
Arsenic-70	1,000	Rubidium-89	1,000
Arsenic-71	100	Strontium-80	100
Arsenic-72	100	Strontium-81	1,000
Arsenic-73	100	Strontium-83	100
Arsenic-74	100	Strontium-85m	1,000
Arsenic-76	100	Strontium-85	100
Arsenic-77	100	Strontium-87m	1,000
Arsenic-78	1,000	Strontium-89	10
Selenium-70	1,000	Strontium-90	0.1
Selenium-73m	1,000	Strontium-91	100
Selenium-73	100	Strontium-92	100
Selenium-75	100	Yttrium-86m	1,000
Selenium-79	100	Yttrium-86	100
Selenium-81m	1,000	Yttrium-87	100
Selenium-81	1,000	Yttrium-88	10
Selenium-83	1,000	Yttrium-90m	1,000
Bromine-74m	1,000	Yttrium-90	10
Bromine-74	1,000	Yttrium-91m	1,000
Bromine-75	1,000	Yttrium-91	10
Bromine-76	100	Yttrium-92	100
Bromine-77	1,000	Yttrium-93	100
Bromine-80m	1,000	Yttrium-94	1,000
Bromine-80	1,000	Yttrium-95	1,000
Bromine-82	100	Zirconium-86	100
Bromine-83	1,000	Zirconium-88	10
Bromine-84	1,000	Zirconium-89	100
Krypton-74	1,000	Zirconium-93	1
Krypton-76	1,000	Zirconium-95	10
Krypton-77	1,000	Zirconium-97	100
Krypton-79	1,000		

*To convert μCi to kBq, multiply the μCi value by 37.

Radionuclide	Quantity (μCi)*	Radionuclide	Quantity (μCi)*
Niobium-88	1,000	Palladium-101	1,000
Niobium-89m (66min)	1,000	Palladium-103	100
Niobium-89 (122min)	1,000	Palladium-107	10
Niobium-90	100	Palladium-109	100
Niobium-93m	10	Silver-102	1,000
Niobium-94	1	Silver-103	1,000
Niobium-95m	100	Silver-104m	1,000
Niobium-95	100	Silver-104	1,000
Niobium-96	100	Silver-105	100
Niobium-97	1,000	Silver-106m	100
Niobium-98	1,000	Silver-106	1,000
Molybdenum-90	100	Silver-108m	1
Molybdenum-93m	100	Silver-11Om	10
Molybdenum-93	10	Silver-111	100
Molybdenum-99	100	Silver-112	100
Molybdenum-101	1,000	Silver-115	1,000
Technetium-93m	1,000	Cadmium-104	1,000
Technetium-93	1,000	Cadmium-107	1,000
Technetium-94m	1,000	Cadmium-109	1
Technetium-94	1,000	Cadmium-113m	0.1
Technetium-96m	1,000	Cadmium-113	100
Technetium-96	100	Cadmium-115m	10
Technetium-97m	100	Cadmium-115	100
Technetium-97	1,000	Cadmium-117m	1,000
Technetium-98	10	Cadmium-117	1,000
Technetium-99m	1,000	Indium-109	1,000
Technetium-99	100	Indium-110 (69.1 min)	1,000
Technetium-101	1,000	Indium-11O (4.9 h)	1,000
Technetium-104	1,000	Indium-111	100
Ruthenium-94	1,000	Indium-112	1,000
Ruthenium-97	1,000	Indium-113m	1,000
Ruthenium-103	100	Indium-114m	10
Ruthenium-105	1,000	Indium-115m	1,000
Ruthenium-106	1	Indium-115	100
Rhodium-99m	1,000	Indium-116m	1,000
Rhodium-99	100	Indium-117m	1,000
Rhodium-100	100	Indium-117	1,000
Rhodium-101m	1,000	Indium-119m	1,000
Rhodium-101	10	Tin-110	100
Rhodium-102m	10	Tin-111	1,000
Rhodium-102	10	Tin-113	100
Rhodium-103m	1,000	Tin-117m	100
Rhodium-105	100	Tin-119m	100
Rhodium-106m	1,000	Tin-121m	100
Rhodium-107	1,000	Tin-121	1,000
Palladium-100	100		

*To convert μCi to kBq, multiply the μCi value by 37.

Radionuclide	Quantity (μCi)*	Radionuclide	Quantity (μCi)*
Tin-123m	1,000	Tellurium-133	1,000
Tin-123	10	Tellurium-134	1,000
Tin-125	10	Iodine-120m	1,000
Tin-126	10	Iodine-120	100
Tin-127	1,000	Iodine-121	1,000
Tin-128	1,000	Iodine-123	100
Antimony-115	1,000	Iodine-124	10
Antimony-116m	1,000	Iodine-125	1
Antimony-116	1,000	Iodine-126	1
Antimony-117	1,000	Iodine-128	1,000
Antimony-118m	1,000	Iodine-129	1
Antimony-119	1,000	Iodine-130	10
Antimony-120		Iodine-131	1
(16 min)	1,000	Iodine-132m	100
Antimony-120		Iodine-132	100
(5.76 d)	100	Iodine-133	10
Antimony-122	100	Iodine-134	1,000
Antimony-124m	1,000	Iodine-135	100
Antimony-124	10	Xenon-120	1,000
Antimony-125	100	Xenon-121	1,000
Antimony-126m	1,000	Xenon-122	1,000
Antimony-126	100	Xenon-123	1,000
Antimony-127	100	Xenon-125	1,000
Antimony-128		Xenon-127	1,000
(10.4 min)	1,000	Xenon-129m	1,000
Antimony-128		Xenon-131m	1,000
(9.O1 h)	100	Xenon-133m	1,000
Antimony-129	100	Xenon-133	1,000
Antimony-130	1,000	Xenon-135m	1,000
Antimony-131	1,000	Xenon-135	1,000
Tellurium-116	1,000	Xenon-138	1,000
Tellurium-121m	10	Cesium-125	1,000
Tellurium-121	100	Cesium-127	1,000
Tellurium-123m	10	Cesium-129	1,000
Tellurium-123	100	Cesium-130	1,000
Tellurium-125m	10	Cesium-131	1,000
Tellurium-127m	10	Cesium-132	100
Tellurium-127	1,000	Cesium-134m	1,000
Tellurium-129m	10	Cesium-134	10
Tellurium-129	1,000	Cesium-135m	1,000
Tellurium-131m	10	Cesium-135	100
Tellurium-131	100	Cesium-136	10
Tellurium-132	10	Cesium-137	10
Tellurium-133m	100	Cesium-138	1,000

*To convert μCi to kBq, multiply the μCi value by 37.

Radionuclide	Quantity (μCi)*	Radionuclide	Quantity (μCi)*
Barium-126	1,000	Promethium-141	1,000
Barium-128	100	Promethium-143	100
Barium-131m	1,000	Promethium-144	10
Barium-131	100	Promethium-145	10
Barium-133m	100	Promethium-146	1
Barium-133	100	Promethium-147	10
Barium-135m	100	Promethium-148m	10
Barium-139	1,000	Promethium-148	10
Barium-140	100	Promethium-149	100
Barium-141	1,000	Promethium-150	1,000
Barium-142	1,000	Promethium-151	100
Lanthanum-131	1,000	Samarium-141m	1,000
Lanthanum-132	100	Samarium-141	1,000
Lanthanum-135	1,000	Samarium-142	1,000
Lanthanum-137	10	Samarium-145	100
Lanthanum-138	100	Samarium-146	1
Lanthanum-140	100	Samarium-147	100
Lanthanum-141	100	Samarium-151	10
Lanthanum-142	1,000	Samarium-153	100
Lanthanum-143	1,000	Samarium-155	1,000
Cerium-134	100	Samarium-156	1,000
Cerium-135	100	Europium-145	100
Cerium-137m	100	Europium-146	100
Cerium-137	1,000	Europium-147	100
Cerium-139	100	Europium-148	10
Cerium-141	100	Europium-149	100
Cerium-143	100	Europium-150	
Cerium-144	1	(12.62 h)	100
Praseodymium-136	1,000	Europium-150	
Praseodymium-137	1,000	(34.2 y)	1
Praseodymium-138m	1,000	Europium-152m	100
Praseodymium-139	1,000	Europium-152	1
Praseodymium-142m	1,000	Europium-154	1
Praseodymium-142	100	Europium-155	10
Praseodymium-143	100	Europium-156	100
Praseodymium-144	1,000	Europium-157	100
Praseodymium-145	100	Europium-158	1,000
Praseodymium-147	1,000	Gadolinium-145	1,000
Neodymium-136	1,000	Gadolinium-146	10
Neodymium-138	100	Gadolinium-147	100
Neodymium-139m	1,000	Gadolinium-148	0.001
Neodymium-139	1,000	Gadolinium-149	100
Neodymium-141	1,000	Gadolinium-151	10
Neodymium-147	100	Gadolinium-152	100
Neodymium-149	1,000	Gadolinium-153	10
Neodymium-151	1,000	Gadolinium-159	100

*To convert μCi to kBq, multiply the μCi value by 37.

Radionuclide	Quantity (μCi)*	Radionuclide	Quantity (μCi)*
Terbium-147	1,000	Ytterbium-162	1,000
Terbium-149	100	Ytterbium-166	100
Terbium-150	1,000	Ytterbium-167	1,000
Terbium-151	100	Ytterbium-169	100
Terbium-153	1,000	Ytterbium-175	100
Terbium-154	100	Ytterbium-177	1,000
Terbium-155	1,000	Ytterbium-178	1,000
Terbium-156m		Lutetium-169	100
(5.O h)	1,000	Lutetium-170	100
Terbium-156m		Lutetium-171	100
(24.4 h)	1,000	Lutetium-172	100
Terbium-156	100	Lutetium-173	10
Terbium-157	10	Lutetium-174m	10
Terbium-158	1	Lutetium-174	10
Terbium-160	10	Lutetium-176m	1,000
Terbium-161	100	Lutetium-176	100
Dysprosium-155	1,000	Lutetium-177m	10
Dysprosium-157	1,000	Lutetium-177	100
Dysprosium-159	100	Lutetium-178m	1,000
Dysprosium-165	1,000	Lutetium-178	1,000
Dysprosium-166	100	Lutetium-179	1,000
Holmium-155	1,000	Hafnium-170	100
Holmium-157	1,000	Hafnium-172	1
Holmium-159	1,000	Hafnium-173	1,000
Holmium-161	1,000	Hafnium-175	100
Holmium-162m	1,000	Hafnium-177m	1,000
Holmium-162	1,000	Hafnium-178m	0.1
Holmium-164m	1,000	Hafnium-179m	10
Holmium-164	1,000	Hafnium-180m	1,000
Holmium-166m	1	Hafnium-181	10
Holmium-166	100	Hafnium-182m	1,000
Holmium-167	1,000	Hafnium-182	0.1
Erbium-161	1,000	Hafnium-183	1,000
Erbium-165	1,000	Hafnium-184	100
Erbium-169	100	Tantalum-172	1,000
Erbium-171	100	Tantalum-173	1,000
Erbium-172	100	Tantalum-174	1,000
Thulium-162	1,000	Tantalum-175	1,000
Thulium-166	100	Tantalum-176	100
Thulium-167	100	Tantalum-177	1,000
Thulium-170	10	Tantalum-178	1,000
Thulium-171	10	Tantalum-179	100
Thulium-172	100	Tantalum-180m	1,000
Thulium-173	100	Tantalum-180	100
Thulium-175	1,000	Tantalum-182m	1,000

*To convert μCi to kBq, multiply the μCi value by 37.

Radionuclide	Quantity (μCi)*	Radionuclide	Quantity (μCi)*
Tantalum-182	10	Iridium-188	100
Tantalum-183	100	Iridium-189	100
Tantalum-184	100	Iridium-190m	1,000
Tantalum-185	1,000	Iridium-190	100
Tantalum-186	1,000	Iridium-192m	
Tungsten-176	1,000	(1.4 min)	10
Tungsten-177	1,000	Iridium-192	
Tungsten-178	1,000	(73.8 d)	1
Tungsten-179	1,000	Iridium-194m	10
Tungsten-181	1,000	Iridium-194	100
Tungsten-185	100	Iridium-195m	1,000
Tungsten-187	100	Iridium-195	1,000
Tungsten-188	10	Platinum-186	1,000
Rhenium-177	1,000	Platinum-188	100
Rhenium-178	1,000	Platinum-189	1,000
Rhenium-181	1,000	Platinum-191	100
Rhenium-182		Platinum-193m	100
(12.7 h)	1,000	Platinum-193	1,000
Rhenium-182		Platinum-195m	100
(64.0 h)	100	Platinum-197m	1,000
Rhenium-184m	10	Platinum-197	100
Rhenium-184	100	Platinum-199	1,000
Rhenium-186m	10	Platinum-200	100
Rhenium-186	100	Gold-193	1,000
Rhenium-187	1,000	Gold-194	100
Rhenium-188m	1,000	Gold-195	10
Rhenium-188	100	Gold-198m	100
Rhenium-189	100	Gold-198	100
Osmium-180	1,000	Gold-199	100
Osmium-181	1,000	Gold-200m	100
Osmium-182	100	Gold-200	1,000
Osmium-185	100	Gold-201	1,000
Osmium-189m	1,000	Mercury-193m	100
Osmium-191m	1,000	Mercury-193	1,000
Osmium-191	100	Mercury-194	1
Osmium-193	100	Mercury-195m	100
Osmium-194	1	Mercury-195	1,000
Iridium-182	1,000	Mercury-197m	100
Iridium-184	1,000	Mercury-197	1,000
Iridium-185	1,000	Mercury-199m	1,000
Iridium-186	100	Mercury-203	100
Iridium-187	1,000		

*To convert μCi to kBq, multiply the μCi value by 37.

Radionuclide	Quantity (μCi)*	Radionuclide	Quantity (μCi)*
Thallium-194m	1,000	Francium-223	100
Thallium-194	1,000	Radium-223	0.1
Thallium-195	1,000	Radium-224	0.1
Thallium-197	1,000	Radium-225	0.1
Thallium-198m	1,000	Radium-226	0.1
Thallium-198	1,000	Radium-227	1,000
Thallium-199	1,000	Radium-228	0.1
Thallium-201	1,000	Actinium-224	1
Thallium-200	1,000	Actinium-225	0.01
Thallium-202	100	Actinium-226	0.1
Thallium-204	100	Actinium-227	0.001
Lead-195m	1,000	Actinium-228	1
Lead-198	1,000	Thorium-226	10
Lead-199	1,000	Thorium-227	0.01
Lead-200	100	Thorium-228	0.001
Lead-201	1,000	Thorium-229	0.001
Lead-202m	1,000	Thorium-230	0.001
Lead-202	10	Thorium-231	100
Lead-203	1,000	Thorium-232	100
Lead-205	100	Thorium-234	10
Lead-209	1,000	Thorium-natural	100
Lead-210	0.01	Protactinium-227	10
Lead-211	100	Protactinium-228	1
Lead-212	1	Protactinium-230	0.1
Lead-214	100	Protactinium-231	0.001
Bismuth-200	1,000	Protactinium-232	1
Bismuth-201	1,000	Protactinium-233	100
Bismuth-202	1,000	Protactinium-234	100
Bismuth-203	100	Uranium-230	0.01
Bismuth-205	100	Uranium-231	100
Bismuth-206	100	Uranium-232	0.001
Bismuth-207	10	Uranium-233	0.001
Bismuth-210m	0.1	Uranium-234	0.001
Bismuth-210	1	Uranium-235	0.001
Bismuth-212	10	Uranium-236	0.001
Bismuth-213	10	Uranium-237	100
Bismuth-214	100	Uranium-238	100
Polonium-203	1,000	Uranium-239	1,000
Polonium-205	1,000	Uranium-240	100
Polonium-207	1,000	Uranium-natural	100
Polonium-210	0.1	Neptunium-232	100
Astatine-207	100	Neptunium-233	1,000
Astatine-211	10	Neptunium-234	100
Radon-220	1	Neptunium-235	100
Radon-222	1	Neptunium-236	
Francium-222	100	(1.15E+5 y)	0.001

*To convert μCi to kBq, multiply the μCi value by 37.

Radionuclide	Quantity (μCi)*	Radionuclide	Quantity (μCi)*
Neptunium-236 (22.5 h)	1	Curium-242	0.01
Neptunium-237	0.001	Curium-243	0.001
Neptunium-238	10	Curium-244	0.001
Neptunium-239	100	Curium-245	0.001
Neptunium-240	1,000	Curium-246	0.001
Plutonium-234	10	Curium-247	0.001
Plutonium-235	1,000	Curium-248	0.001
Plutonium-236	0.001	Curium-249	1,000
Plutonium-237	100	Berkelium-245	100
Plutonium-238	0.001	Berkelium-246	100
Plutonium-239	0.001	Berkelium-247	0.001
Plutonium-240	0.001	Berkelium-249	0.1
Plutonium-241	0.01	Berkelium-250	10
Plutonium-242	0.001	Californium-244	100
Plutonium-243	1,000	Californium-246	1
Plutonium-244	0.001	Californium-248	0.01
Plutonium-245	100	Californium-249	0.001
Americium-237	1,000	Californium-250	0.001
Americium-238	100	Californium-251	0.001
Americium-239	1,000	Californium-252	0.001
Americium-240	100	Californium-253	0.1
Americium-241	0.001	Californium-254	0.001
Americium-242m	0.001	Einsteinium-250	100
Americium-242	10	Einsteinium-251	100
Americium-243	0.001	Einsteinium-253	0.1
Americium-244m	100	Einsteinium-254m	1
Americium-244	10	Einsteinium-254	0.01
Americium-245	1,000	Fermium-252	1
Americium-246m	1,000	Fermium-253	1
Americium-246	1,000	Fermium-254	10
Curium-238	100	Fermium-255	1
Curium-240	0.1	Fermium-257	0.01
Curium-241	1	Mendelevium-257	10
		Mendelevium-258	0.01
Any alpha-emitting radionuclide not listed above or mixtures of alpha emitters of unknown composition	0.001	Any radionuclide other than alpha-emitting radionuclides not listed above, or mixtures of beta emitters of unknown composition	0.01

<u>NOTE</u>: For purposes of A.3.13(e), A.3.16(a), and A.5.12(a) where there is involved a combination of radionuclides in known amounts, the limit for the combination shall be derived as follows: determine, for each radionuclide in the combination, the ratio between the quantity present in the combination and the limit otherwise established for the specific radionuclide when not in combination. The sum of such ratios for all radionuclides in the combination may not exceed "1" -- that is, unity.

*To convert μCi to kBq, multiply the μCi value by 37.

APPENDIX D

REQUIREMENTS FOR TRANSFER OF LOW-LEVEL RADIOACTIVE WASTE FOR DISPOSAL AT LAND DISPOSAL FACILITIES AND MANIFESTS

I. Manifest

A waste generator, collector, or processor who transports, or offers for transportation, low-level radioactive waste intended for ultimate disposal at a licensed low-level radioactive waste land -disposal facilities must prepare a Manifest (OMB Control Numbers 3150-0164, -0165, and -0166) reflecting information requested on applicable NRC Forms 540 (Uniform Low-Level Radioactive Waste Manifest (Shipping Paper)) and 541 (Uniform Low-Level Radioactive Waste Manifest (Container and Waste Description)) and, if necessary, on an applicable NRC Form 542 (Uniform Low-Level Radioactive Waste Manifest (Manifest Index and Regional Compact Tabulation)). NRC Forms 540 and 540A must be completed and must physically accompany the pertinent low-level waste shipment. Upon agreement between shipper and consignee, NRC Forms 541 and 541A and 542 and 542A may be completed, transmitted, and stored in electronic media with the capability for producing legible, accurate, and complete records on the respective forms. Licensees are not required by the Agency to comply with the manifesting requirements of this part when they ship:

(a) LLW for processing and expect its return (i.e., for storage under their license) prior to disposal at a licensed land disposal facility;

(b) LLW that is being returned to the licensee who is the "waste generator" or generator," as defined in this part; or

(c) Radioactively contaminated material to a "waste processor" that becomes the processor's "residual waste."

For guidance in completing these forms, refer to the instructions that accompany the forms. Copies of manifests required by this appendix may be legible carbon copies, photocopies, or computer printouts that reproduce the data in the format of the uniform manifest. NRC Forms 540, 540A, 541, 541A, 542 and 542A, and the accompanying instructions, in hard copy, may be obtained from the Information and Records Management Branch, Office of Information Resources Management, U.S. Nuclear Regulatory Commission, Washington, DC 20555, telephone (301) 415-7232. This appendix includes information requirements of the Department of Transportation, as codified in 49 CFR part 172. Information on hazardous, medical, or other waste, required to meet Environmental Protection Agency regulations, as codified in 40 CFR parts 259, 261 or elsewhere, is not addressed in this section, and must be provided on the required EPA forms. However, the required EPA forms must accompany the Uniform Low-Level Radioactive Waste Manifest required by these regulations.

As used in this appendix, the following definitions apply:

Chelating agent means amine polycarboxylic acids (e.g., EDTA, DTPA), hydroxy-carboxylic acids and polycarboxylic acids (e.g., citric acid, carbolic acid, and glucinic acid).

Chemical description means a description of the principal chemical characteristics of a low-level radioactive waste.

Computer-readable medium means that the regulatory agency's computer can transfer the information from the medium into its memory.

Consignee means the designated receiver of the shipment of low-level radioactive waste.

Decontamination facility means a facility operating under an Agency, U.S. Nuclear Regulatory Commission, Agreement State or Licensing State license whose principal purpose is decontamination of equipment or materials to accomplish recycle, reuse, or other waste management objectives, and, for purposes of this part, is not considered to be a consignee for LLW shipments.

Disposal container means a container principally used to confine low-level radioactive waste during disposal operations at a land disposal facility (also see "high integrity container"). Note that for some shipments, the disposal container may be the transport package.

I.

EPA identification number means the number received by a transporter following application to the Administrator of EPA as required by 40 CFR part 263.

Generator means a licensee operating under an Agency, U.S. Nuclear Regulatory Commission, Agreement State or Licensing State license who (1) is a waste generator as defined in this part, or (2) is the licensee to whom waste can be attributed within the context of the Low-Level Radioactive Waste Policy Amendments Act of 1985 (e.g., waste generated as a result of decontamination or recycle activities).

High integrity container (HIC) means a container commonly designed to meet the structural stability requirements of 10 CFR 61.56, and to meet Department of Transportation requirements for a Type A package.

Land disposal facility means the land, buildings and structures, and equipment which are intended to be used for the disposal of radioactive wastes.

NRC Forms 540, 540A, 541, 541A, 542, and 542A are official NRC Forms referenced in this appendix. Licensees need not use originals of these NRC Forms as long as any substitute forms are equivalent to the original documentation in respect to content, clarity, size, and location of information. Upon agreement between the shipper and consignee, NRC Forms 541 (and 541A) and NRC Forms 542 (and 542A) may be completed, transmitted, and stored in electronic media. The electronic media must have the capability for producing legible, accurate, and complete records in the formate of the uniform manifest.

Package means the assembly of components necessary to ensure compliance with the packaging requirements of DOT regulations, together with its radioactive contents, as presented for transport.

Physical description means the items called for on NRC Form 541 to describe a low-level radioactive waste.

Residual waste means low-level radioactive waste resulting from processing or decontamination activities that cannot be easily separated into distinct batches attributable to specific waste generators. This waste is attributable to the processor or decontamination facility, as applicable.

Source material has the same meaning as that given in Subpart A.0 of these regulations.

Shipper means the licensed entity (i.e., the waste generator, waste collector, or waste processor) who offers low-level radioactive waste for transportation, typically consigning this type of waste to a licensed waste collector, waste processor, or land disposal facility operator.

Shipping paper means NRC Form 540 and, if required, NRC Form 540A which includes the information required by DOT in 49 CFR part 172.

Special nuclear material has the same meaning as that given in Subpart A.0 of these regulations.

Uniform Low-Level Radioactive Waste Manifest or uniform manifest means the combination of NRC Forms 540, 541, and, if necessary, 542, and their respective continuation sheets as needed, or equivalent.

Waste collector means an entity, operating under an Agency, U.S. Nuclear Regulatory Commission, Agreement State or Licensing State license, whose principal purpose is to collect and consolidate waste generated by others, and to transfer this waste, without processing or repackaging the collected waste, to another licensed waste collector, licensed waste processor, or licensed land disposal facility.

Waste description means the physical, chemical and radiological description of a low-level radioactive waste as called for on NRC Form 541.

Waste generator means an entity, operating under an Agency, U.S. Nuclear Regulatory Commission, Agreement State or Licensing State license, who (1) possesses any material or component that contains radioactivity or is radioactively contaminated for which the licensee foresees no further use, and (2) transfers this material or component to a licensed land disposal

facility or to a licensed waste collector or processor for handling or treatment prior to disposal. A licensee performing processing or decontamination services may be a "waste generator" if the transfer of low-level radioactive waste from its facility is defined as "residual waste."

I.

Waste processor means an entity, operating under an Agency, U.S. Nuclear Regulatory Commission, Agreement State or Licensing State license, whose principal purpose is to process repackage, or otherwise treat low-level radioactive material or waste generated by others prior to eventual transfer of waste to a licensed low-level radioactive waste land disposal facility.

Waste type means a waste within a disposal container having a unique physical description (i.e., a specific waste descriptor code or description; or a waste sorbed on or solidified in a specifically defined media).

I. INFORMATION REQUIREMENTS

A. General Information

The shipper of the radioactive waste, shall provide the following information on the uniform manifest:

(1) The name, facility address, and telephone number of the licensee shipping the waste;

(2) An explicit declaration indicating whether the shipper is acting as a waste generator, collector, processor, or a combination of these identifiers for purposes of the manifested shipment; and

(3) The name, address, and telephone number, or the name and EPA identification number for the carrier transporting the waste.

B. Shipment Information

The shipper of the radioactive waste shall provide the following information regarding the waste shipment on the uniform manifest:

(1) The date of the waste shipment;

(2) The total number of packages/disposal containers;

(3) The total disposal volume and disposal weight in the shipment;

(4) The total radionuclide activity in the shipment;

(5) The activity of each of the radionuclides H-3, C-14, Tc-99, and 1-129 contained in the shipment; and

(6) The total masses of U-233, U-235, and plutonium in special nuclear material, and the total mass of uranium and thorium in source material.

C. Disposal Container and Waste Information

The shipper of the radioactive waste shall provide the following information on the uniform manifest regarding the waste and each disposal container of waste in the shipment:

(1) An alphabetic or numeric identification that uniquely identifies each disposal container in the shipment;

(2) A physical description of the disposal container, including the manufacturer and model of any high integrity container;

(3) The volume displaced by the disposal container;

(4) The gross weight of the disposal container, including the waste;

(5) For waste consigned to a disposal facility, the maximum radiation level at the surface

of each disposal container;

(6) A physical and chemical description of the waste;

(7) The total weight percentage of cheating agent for any waste containing more than 0.1% chelating agent by weight, plus the identity of the principal chelating agent;

(8) The approximate volume of waste within a container;

(9) The sorbing or solidification media, if any, and the identity of the solidification media vendor and brand name;

(10) The identities and activities of individual radionuclides contained in each container, the masses of U-233, U-235, and plutonium in special nuclear material, and the masses of uranium and thorium in source material. For discrete waste types (i.e., activated materials, contaminated equipment, mechanical filters, sealed source/devices, and wastes in solidification/stabilization media), the identities and activities of individual radionuclides associated with or contained on these waste types within a disposal container shall be reported;

(11) The total radioactivity within each container; and

(12) For wastes consigned to a disposal facility, the classification of the waste pursuant to Section I of Appendix E to this Part. Waste not meeting the structural stability requirements of Section II(b) of Appendix E to this Part must be identified.

D. <u>Uncontainerized Waste Information</u>

The shipper of the radioactive waste shall provide the following information on the uniform manifest regarding a waste shipment delivered without a disposal container:

(1) The approximate volume and weight of the waste;

(2) A physical and chemical description of the waste;

(3) The total weight percentage of chelating agent if the chelating agent exceeds 0.1% by weight, plus the identity of the principal chelating agent;

(4) For waste consigned to a disposal facility, the classification of the waste pursuant to Section I of Appendix E to this Part. Waste not meeting the structural stability requirements of Section II(b) of Appendix E to this Part must be identified;

(5) The identities and activities of individual radionuclides contained in the waste, the masses of U-233, U-235, and plutonium in special nuclear material and the masses of uranium and thorium in source material; and

(6) For wastes consigned to a disposal facility, the maximum radiation levels at the surface of the waste.

E. <u>Multi-Generator Disposal Container Information</u>

This section applies to disposal containers enclosing mixtures of waste originating from different generators. (Note: The origin of the LLW resulting from a processor's activities may be attributable to one or more generators" (including "waste generators"as defined in this part). It also applies to mixtures of wastes shipped in an Uncontainerized form, for which portions of the mixture within the shipment originate from different generators.

(1) For homogeneous mixtures of waste, such as incinerator ash, provide the waste description applicable to the mixture and the volume of the waste attributed to each generator.

(2) For heterogeneous mixtures of waste, such as the combined products from a large compactor, identify each generator contributing waste to the disposal container, and, for discrete waste types (i.e., activated materials, contaminated equipment, mechanical filters, sealed source/devices, and wastes in solidification/stabilization media), the identities and

activities of individual radionuclides contained on these waste types within the disposal container.

E.(2)

For each generator, provide the following:

(a) The volume of waste within the disposal container;

(b) A physical and chemical description of the waste, including the solidification agent, if any;

(c) The total weight percentage of chelating agents for any disposal container containing more than 0. 1 % chelating agent by weight, plus the identity of the principal chelating agent;

(d) The sorbing or solidification media, if any, and the identity of the solidification media vendor and brand name if the media is claimed to meet stability requirements in Section II(b) of Appendix E to this Part; and

(e) Radionuclide identities and activities contained in the waste, the masses of U-233, U-235, and plutonium in special nuclear material, and the masses of uranium and thorium in source material if contained in the waste.

II. CERTIFICATION

An authorized representative of the waste generator, processor. or collector shall certify by signing and dating the shipment manifest that the transported materials are properly classified, described, packaged, marked, and labeled and are in proper condition for transportation according to the applicable regulations of the Agency, the U.S. Department of Transportation and the U.S. Nuclear Regulatory Commission. A collector in signing the certification is certifying that nothing has been done to the collected waste which would invalidate the waste generator's certification.

III. CONTROL AND TRACKING

(a) Any licensee who transfers radioactive waste to a land disposal facility or a licensed waste collector shall comply with the requirements in paragraphs A.1 through 9 of this section. Any licensee who transfers waste to a licensed waste processor for waste treatment or repackaging shall comply with the requirements of paragraphs A.4 through 9 of this section. A licensee shall:

(1) Prepare all wastes so that the waste is classified according to Section I of Appendix E to this Part and meets the waste characteristics requirements in Section II(b) of Appendix E to this Part;

(2) Label each disposal container (or transport package if potential radiation hazards preclude labeling of the individual disposal container) of waste to identify whether it is Class A waste, Class B waste, Class C waste, or greater then Class C waste, in accordance with Section I of Appendix E to this Part;

(3) Conduct a quality assurance program to assure compliance with Appendix E to this Part (the program must include management evaluation of audits);

(4) Prepare the NRC Uniform Low-Level Radioactive Waste Manifest as required by this appendix;

(5) Forward a copy or electronically transfer the Uniform Low-Level Radioactive Waste Manifest to the intended consignee so that either (i) receipt of the manifest precedes the LLW shipment or (ii) the manifest is delivered to the consignee with the waste at the time the waste is transferred to the consignee. Using both (i) and (ii) is also acceptable;

(6) Include NRC Form 540 (and NRC Form 540A. if required) with the shipment regardless of the option chosen in paragraph A.5 of this section;

(7) Receive acknowledgment of the receipt of the shipment in the form of a signed copy of NRC Form 540;

(8) Retain a copy of or electronically store the Uniform Low-Level Radioactive Waste Manifest and documentation of acknowledgment of receipt as the record of transfer of licensed material as required by C.5.14; and

(9) For any shipments or any part of a shipment for which acknowledgment of receipt has not been received within the times set forth in this appendix, conduct an investigation in accordance with paragraph E of this appendix.

(b) Any waste collector licensee who handles only prepackaged waste shall:

(1) Acknowledge receipt of the waste from the shipper within one week of receipt by returning a signed copy of NRC Form 540;

(2) Prepare a new manifest to reflect consolidated shipments that meet the requirements of this appendix. The waste collector shall ensure that, for each container of waste in the shipment, the manifest identifies the generator of that container of waste;

(3) Forward a copy or electronically transfer the Uniform, Low-Level Radioactive Waste Manifest to the intended consignee so that either: (i) Receipt of the manifest precedes the LLW shipment or (ii) the manifest is delivered to the consignee with the waste at the time the waste is transferred to the consignee. Using both (i) and (ii) is also acceptable;

(4) Include NRC Form 540 (and NRC Form 540A, if required) with the shipment regardless of the option chosen in paragraph B.3 of this section;

(5) Receive acknowledgment of the receipt of the shipment in the form of a signed copy of NRC Form 540;

(6) Retain a copy of or electronically store the Uniform Low-Level Radioactive Waste Manifest and documentation of acknowledgment of receipt as the record of transfer of licensed material as required by C.5.14;

(7) For any shipments or any part of a shipment for which acknowledgment of receipt has not been received within the times set forth in this appendix, conduct an investigation in accordance with paragraph E of this appendix; and

(8) Notify the shipper and the Agency when any shipment, or part of a shipment, has not arrived within 60 days after receipt of an advance manifest, unless notified by the shipper that the shipment has been canceled.

(c) Any licensed waste processor who treats or repackages waste shall:

(1) Acknowledge receipt of the waste from the shipper within one week of receipt by returning a signed copy of NRC Form 540;

(2) Prepare a now manifest that meets the requirements of this appendix. Preparation of the new manifest reflects that the processor is responsible for meeting these requirements. For each container of waste in the shipment, the manifest shall identify the waste generators, the preprocessed waste volume, and the other information as required in paragraph I.E. of this appendix;

(3) Prepare all wastes so that the waste is classified according to Section I of Appendix E to this Part and meets the waste characteristics requirements in Section II of Appendix E to this Part;

(4) Label each package of waste to identify whether it is Class A waste, Class B waste, or Class C waste, in accordance with Section I of Appendix E to this Part;

(5) Conduct a quality assurance program to assure compliance with Appendix E to this Part (the program shall include management evaluation of audits);

(6) Forward a copy, or electronically transfer the Uniform Low-Level Radioactive Waste Manifest to the intended consignee so that either; (i) Receipt of the manifest precedes the LLW shipment or (ii) the manifest is delivered to the consignee with the waste at the time the waste is transferred to the consignee. Using both (i) and (ii) is also acceptable;

(7) Include NRC Form 540 (and NRC Form 540A, if required) with the shipment regardless of the option chosen in paragraph C.6 of this section;

(8) Receive acknowledgment of the receipt of the shipment in the form of a signed copy of NRC Form 540;

(9) Retain a copy of or electronically store the Uniform Low-Level Radioactive Waste Manifest and documentation of acknowledgment of receipt as the record of transfer of licensed material as required by C.5.14;

(10) For any shipment or any part of a shipment for which acknowledgment of receipt has not been received within the times set forth in this appendix, conduct an investigation in accordance with paragraph E of this appendix; and

(11) Notify the shipper and the Agency when any shipment, or part of a shipment, has not arrived within 60 days after receipt of an advance manifest, unless notified by the shipper that the shipment has been canceled.

(d) The land disposal facility operator shall:

(1) Acknowledge receipt of the waste within one week of receipt by returning, as a minimum, a signed copy of NRC Form 540 to the shipper. The shipper to be notified is the licensee who last possessed the waste and transferred the waste to the operator. If any discrepancy exists between materials listed on the Uniform Low-Level Radioactive Waste Manifest and materials received, copies or electronic transfer of the affected forms must be returned indicating the discrepancy;

(2) Maintain copies of all completed manifests and electronically store the information required by this Appendix (except for shipper and carrier telephone numbers and shipper and consignee certifications), the date the shipment of radioactive waste was received at the disposal facility, the date of disposal of the waste, a traceable shipment manifest number, a description of any engineered barrier or structural overpack provided for disposal of the waste, the location of disposal at the disposal site, the containment integrity of the waste disposal containers as received, any discrepancies between materials listed on the manifest and those received, the volume of any pallets, bracing or other shipping or onsite generated materials that are contaminated, and are disposed of as contaminated materials or suspect materials, and any evidence of leaking or damaged disposal containers or radiation or contamination limits specified in Agency, U.S. Department of Transportation or U.S. Nuclear Regulatory Commission regulations until the Agency terminates the license; and

(3) Notify the shipper and the Agency when any shipment, or part of a shipment, has not arrived within 60 days after receipt of an advance manifest, unless notified by the shipper that the shipment has been canceled.

(e) Any shipment or part of a shipment for which acknowledgment is not received within the times set forth in this section must:

(1) Be investigated by the shipper if the shipper has not received notification or receipt within 20 days after transfer; and

(2) Be traced and reported. The investigation shall include tracing the shipment and filing a report with the Agency. Each licensee who conducts a trace investigation shall file a written report with the Agency within 2 weeks of completion of the investigation.

APPENDIX E

CLASSIFICATION AND CHARACTERISTICS OF LOW-LEVEL RADIOACTIVE WASTE

I. Classification of Radioactive Waste for Land Disposal

(a) **Considerations.** Determination of the classification of radioactive waste involves two considerations. First, consideration must be given to the concentration of long-lived radionuclides (and their shorter-lived precursors) whose potential hazard will persist long after such precautions as institutional controls, improved waste form, and deeper disposal have ceased to be effective. These precautions delay the time when long-lived radionuclides could cause exposures. In addition, the magnitude of the potential dose is limited by the concentration and availability of the radionuclide at the time of exposure. Second, consideration must be given to the concentration of shorter-lived radionuclides for which requirements on institutional controls, waste form, and disposal methods are effective.

(b) **Classes of Waste.**

(1) Class A waste is waste that is usually segregated from other waste classes at the disposal site. The physical form and characteristics of Class A waste must meet the minimum requirements set forth in Section II.(a). If Class A waste also meets the stability requirements set forth in Section II.(b), it is not necessary to segregate the waste for disposal.

(2) Class B waste is waste that must meet more rigorous requirements on waste form to ensure stability after disposal. The physical form and characteristics of Class B waste must meet both the minimum and stability requirements set forth in Section II.

(3) Class C waste is waste that not only must meet more rigorous requirements on waste form to ensure stability but also requires additional measures at the disposal facility to protect against inadvertent intrusion. The physical form and characteristics of Class C waste must meet both the minimum and stability requirements set forth in Section II.

(c) **Classification Determined by Long-Lived Radionuclides.** If the radioactive waste contains only radionuclides listed in Table I, classification shall be determined as follows:

(1) If the concentration does not exceed 0.1 times the value in Table I, the waste is Class A.

(2) If the concentration exceeds 0.1 times the value in Table I, but does not exceed the value in Table I, the waste is Class C.

(3) If the concentration exceeds the value in Table I, the waste is not generally acceptable for land disposal.

(4) For wastes containing mixtures of radionuclides listed in Table I, the total concentration shall be determined by the sum of fractions rule described in Section I.(g).

(d) **Classification Determined by Short-Lived Radionuclides.** If the waste does not contain any of the radionuclides listed in Table I, classification shall be determined based on the concentrations shown in Table II. However, as specified in Section I.(f), if radioactive waste does not contain any nuclides listed in either Table I or II, it is Class A.

(1) If the concentration does not exceed the value in Column 1, the waste is Class A.

(2) If the concentration exceeds the value in Column 1 but does not exceed the value in Column 2, the waste is Class B.

(3) If the concentration exceeds the value in Column 2 but does not exceed the value in Column 3, the waste is Class C.

(4) If the concentration exceeds the value in Column 3, the waste is not generally acceptable for near-surface disposal.

I.(d)(5)

(5) For wastes containing mixtures of the radionuclides listed in Table II, the total concentration shall be determined by the sum of fractions rule described in Section I.(g).

TABLE I

Radionuclide	Concentration curie/cubic meter[a]	nanocurie/gram[b]
C-14	8	
C-14 in activated metal	80	
Ni-59 in activated metal	220	
Nb-94 in activated metal	0.2	
Tc-99	3	
I-129	0.08	
Alpha emitting transuranic radionuclides with half-life greater than five years		100
Pu-241		3,500
Cm-242		20,000
Ra-226		100

[a]To convert the Ci/m^3 values to gigabecquerel (GBq) per cubic meter, multiply the Ci/m^3 value by 37.

[b]To convert the nCi/g values to becquerel (Bq) per gram, multiply the nCi/g value by 37.

TABLE II

Radionuclide	Concentration [curie/cubic meter]* Column 1	Column 2	Column 3
Total of all radio-nuclides with less than 5-year half-life	700	*	*
H-3	40	*	*
Co-60		700	**
Ni-63	3.5	70	700
Ni-63 in activated metal		35	7007000
Sr-90	0.04	150	7000
Cs-137	1	44	4600

*__NOTE:__ To convert the Ci/m^3 value to gigabecquerel (GBq) per cubic meter, multiply the Ci/m^3 value by 37. There are no limits established for these radionuclides in Class B or C wastes. Practical considerations such as the effects of external radiation and internal heat generation on transportation, handling, and disposal will limit the concentrations for these wastes. These wastes shall be Class B unless the concentrations of other radionuclides in Table II determine the waste to be Class C independent of these radionuclides.

(e) **Classification Determined by Both Long- and Short-Lived Radionuclides.** If the radioactive waste contains a mixture of radionuclides, some of which are listed in Table I and some of which are listed in Table II, classification shall be determined as follows:

(1) If the concentration of a radionuclide listed in Table I is less than 0.1 times the value listed in Table I, the class shall be that determined by the concentration of radionuclides listed in Table II.

(2) If the concentration of a radionuclide listed in Table I exceeds 0.1 times the value listed in Table I, but does not exceed the value in Table I, the waste shall be Class C, provided the concentration of radionuclides listed in Table II does not exceed the value shown in Column 3 of Table II.

(f) **Classification of Wastes With Radionuclides Other Than Those Listed in Tables I and II.** If the waste does not contain any radionuclides listed in either Table I or II, it is Class A.

(g) **The Sum of the Fractions Rule for Mixtures of Radionuclides.** For determining classification for waste that contains a mixture of radionuclides, it is necessary to determine the sum of fractions by dividing each radionuclide's concentration by the appropriate limit and adding the resulting values. The appropriate limits must all be taken from the same column of the same table. The sum of the fractions for the column must be less than 1.0 if the waste class is to be determined by that column. Example: A waste contains Sr-90 in a concentration of 1.85 TBq/m^3 (50 Ci/m^3) and Cs-137 in a concentration of 814 GBq/m^3 (22 Ci/m^3). Since the concentrations both exceed the values in Column 1, Table II, they must be compared to Column 2 values. For Sr-90 fraction, 50/150 = 0.33., for Cs-137 fraction, 22/44 = 0.5; the sum of the fractions = 0.83. Since the sum is less than 1.0, the waste is Class B.

(h) **Determination of Concentrations in Wastes.** The concentration of a radionuclide may be determined by indirect methods such as use of scaling factors which relate the inferred concentration of one radionuclide to another that is measured, or radionuclide material accountability, if there is reasonable assurance that the indirect methods can be correlated with actual measurements. The concentration of a radionuclide may be averaged over the volume of the waste, or weight of the waste if the units are expressed as becquerel (nanocurie) per gram.

II. Radioactive Waste Characteristics

(a) The following are minimum requirements for all classes of waste and are intended to facilitate handling and provide protection of health and safety of personnel at the disposal site.

(1) Wastes shall be packaged in conformance with the conditions of the license issued to the site operator to which the waste will be shipped. Where the conditions of the site license are more restrictive than the provisions of Part A, the site license conditions shall govern.

(2) Wastes shall not be packaged for disposal in cardboard or fiberboard boxes.

(3) Liquid waste shall be packaged in sufficient absorbent material to absorb twice the volume of the liquid.

(4) Solid waste containing liquid shall contain as little free-standing and non-corrosive liquid as is reasonably achievable, but in no case shall the liquid exceed 1% of the volume.

(5) Waste shall not be readily capable of detonation or of explosive decomposition or reaction at normal pressures and temperatures, or of explosive reaction with water.

(6) Waste shall not contain, or be capable of generating, quantities of toxic gases, vapors, or fumes harmful to persons transporting, handling, or disposing of the waste. This does not apply to radioactive gaseous waste packaged in accordance with Section II.(a)(8).

(7) Waste must not be pyrophoric. Pyrophoric materials contained in wastes shall be treated,

prepared, and packaged to be nonflammable.[1]

·S.. A. . . . . .

II.(a)(8)

(8) Wastes in a gaseous form shall be packaged at an absolute pressure that does not exceed 1.5 atmospheres at 20°C. Total activity shall not exceed 3.7 TBq (100 Ci) per container.

(9) Wastes containing hazardous, biological, pathogenic, or infectious material shall be treated to reduce to the maximum extent practicable the potential hazard from the non-radiological materials.

(b) The following requirements are intended to provide stability of the waste. Stability is intended to ensure that the waste does not degrade and affect overall stability of the site through slumping, collapse, or other failure of the disposal unit and thereby lead to water infiltration. Stability is also a factor in limiting exposure to an inadvertent intruder, since it provides a recognizable and nondispersible waste.

(1) Waste shall have structural stability. A structurally stable waste form will generally maintain its physical dimensions and its form, under the expected disposal conditions such as weight of overburden and compaction equipment, the presence of moisture, and microbial activity, and internal factors such as radiation effects and chemical changes. Structural stability can be provided by the waste form itself, processing the waste to a stable form, or placing the waste in a disposal container or structure that provides stability after disposal.

(2) Notwithstanding the provisions in Section II.(a)(3) and (4), liquid wastes, or wastes containing liquid, shall be converted into a form that contains as little free-standing and non-corrosive liquid as is reasonably achievable, but in no case shall the liquid exceed 1% of the volume of the waste when the waste is in a disposal container designed to ensure stability, or 0.5% of the volume of the waste for waste processed to a stable form.

(3) Void spaces within the waste and between the waste and its package shall be reduced to the extent practicable.

III. Labeling

Each package of waste shall be clearly labeled to identify whether it is Class A, Class B, or Class C waste, in accordance with Section I.

APPENDIX F

QUANTITIES FOR USE WITH DECOMMISSIONING

Radioactive Material	Microcurie*
Americium-241	0.01
Antimony-122	100
Antimony-124	10
Antimony-125	10
Arsenic-73	100
Arsenic-74	10
Arsenic-76	10
Arsenic-77	100
Barium-131	10
Barium-133	10
Barium-140	10
Bismuth-210	1
Bromine-82	10
Cadmium-109	10
Cadmium-115m	10
Cadmium-115	100
Calcium-45	10
Calcium-47	10
Carbon-14	100
Cerium-141	100
Cerium-143	100
Cerium-144	1
Cesium-131	1,000
Cesium-134m	100
Cesium-134	1
Cesium-135	10
Cesium-136	10
Cesium-137	10
Chlorine-36	10
Chlorine-38	10
Chromium-51	1,000
Cobalt-58m	10
Cobalt-58	10
Cobalt-60	1
Copper-64	100
Dysprosium-165	10
Dysprosium-166	100
Erbium-169	100
Erbium-171	100
Europium-152 (9.2 h)	100
Europium-152 (13 yr)	1
Europium-154	1
Europium-155	10
Florine-18	1,000
Gadolinium-153	10
Gadolinium-159	100
Gallium-72	10
Germanium-71	100
Gold-198	100
Gold-199	100

* To convert µCi to kBq, multiply the µCi value by 37.

Radioactive Material	Microcurie*
Hafnium-181	10
Holmium-166	100
Hydrogen-3	1,000
Indium-113m	100
Indium-114m	10
Indium-115m	100
Indium-115	10
Iodine-125	1
Iodine-126	1
Iodine-129	0.1
Iodine-131	1
Iodine-132	10
Iodine-133	1
Iodine-134	10
Iodine-135	10
Iridium-192	10
Iridium-194	100
Iron-55	100
Iron-59	10
Krypton-85	100
Krypton-87	10
Lanthanum-140	10
Lutetium-177	100
Manganese-52	10
Manganese-54	10
Manganese-56	10
Mercury-197m	100
Mercury-197	100
Mercury-203	10
Molybdenum-99	100
Neodymium-147	100
Neodymium-149	100
Nickel-59	100
Nickel-63	10
Nickel-65	100
Niobium-93m	10
Niobium-95	10
Niobium-97	10
Osmium-185	10
Osmium-191m	100
Osmium-191	100
Osmium-193	100
Palladium-103	100
Palladium-109	100
Phosphorus-32	10
Platinum-191	100
Platinum-193m	100
Platinum-193	100
Platinum-197m	100
Platinum-197	100
Plutonium-239	0.01
Polonium-210	0.1
Potassium-42	10
Praseodymium-142	100
Praseodymium-143	100

* To convert µCi to kBq, multiply the µCi value by 37.

Radioactive Material	Microcurie*
Promethium-147	10
Promethium-149	10
Radium-226	0.01
Rhenium-186	100
Rhenium-188	100
Rhodium-103m	100
Rhodium-105	100
Rubidium-86	10
Rubidium-87	10
Ruthenium-97	100
Ruthenium-103	10
Ruthenium-105	10
Ruthenium-106	1
Samarium-151	10
Samarium-153	100
Scandium-46	10
Scandium-47	100
Scandium-48	10
Selenium-75	10
Silicon-31	100
Silver-105	10
Silver-llOm	1
Silver-111	100
Sodium-22	1
Sodium-24	10
Strontium-85	10
Strontium-89	1
Strontium-90	0.1
Strontium-91	10
Strontium-92	10
Sulfur -35	100
Tantalum-182	10
Technetium-96	10
Technetium-97m	100
Technetium-97	100
Technetium-99m	100
Technetium-99	10
Tellurium-125m	10
Tellurium-127m	10
Tellurium-127	100
Tellurium-129m	10
Tellurium-129	100
Tellurium-131m	10
Tellurium-132	10
Terbium-160	10
Thallium-200	100
Thallium-201	100
Thallium-202	100
Thallium-204	10
Thorium (natural)**	100
Thulium-170	10
Thulium-171	10

* To convert µCi to kBq, multiply the µCi value by 37.

** Based on alpha disintegration rate of Th-232, Th-230 and their daughter products.

Radioactive Material	Microcurie*
Tin-113	10
Tin-125	10
Tungsten-181	10
Tungsten-185	10
Tungsten-187	100
Uranium (natural)**	100
Uranium-233	0.01
Uranium-234	0.01
Uranium-235	0.01
Vanadium-48	10
Xenon-131m	1,000
Xenon-133	100
Xenon-135	100
Ytterbium-175	100
Yttrium-90	10
Yttrium-91	10
Yttrium-92	100
Yttrium-93	100
Zinc-65	10
Zinc-69m	100
Zinc-69	1,000
Zirconium-93	10
Zirconium-95	10
Zirconium-97	10
Any alpha emitting radionuclide not listed above or mixtures of alpha emitters of unknown composition	0.01
Any radionuclide other than alpha emitting radionuclides, not listed above or mixtures of beta emitters of unknown composition	0.1

NOTE: Where there is involved a combination of isotopes in known amounts, the limit for the combination should be derived as follows: Determine, for each isotope in the combination, the ratio between the quantity present in the combination and the limit otherwise established for the specific isotope when not in combination. The sum of such ratios for all the isotopes in the combination may not exceed "1" -- that is, unity.]

* To convert µCi to kBq, multiply the µCi value by 37.

** Based on alpha disintegration rate of U-238, U-234, and U-235.

APPENDIX G

REQUIREMENTS FOR REMOVABLE RADIOACTIVE CONTAMINATION AND EXTERNAL RADIATION LEVELS FROM PACKAGES OFFERED FOR SHIPMENT

I. REMOVABLE RADIOACTIVE CONTAMINATION

(1) The level of removable radioactive contamination on the external surfaces of each package offered for shipment shall be as low as reasonably achievable. The level of removable radioactive contamination shall be determined by wiping an area of 300 square centimeters of the surface concerned with an absorbent material, using moderate pressure, and measuring the activity on the wiping material. Sufficient measurements shall be taken in the most appropriate locations to yield a representative assessment of the removable contamination levels. Except as otherwise provided in paragraph 2 below, the amount of radioactivity measured on any single wiping material, when averaged over the surface wiped, shall not exceed the limits given in Table G-1 below at any time during transport. Other methods of assessment of equal or greater efficiency may be used. When other methods are used, the detection efficiency of the method used shall be taken into account and in no case shall the removable contamination on the external surfaces of the package exceed 10 times the limits listed in Table G-1.

TABLE G-1

REMOVABLE EXTERNAL RADIOACTIVE CONTAMINATION WIPE LIMITS

Contaminant	Maximum Permissible Limits[1] µCi/cm²	dpm/cm²
Beta-gamma emitting radionuclides; all radionuclides with half-lives less than ten days; natural uranium; natural thorium; uranium-235; uranium-238; thorium-232; thorium-228 and thorium-230 when contained in ores or physical concentrates	10^{-5}	22
All other alpha emitting radionuclides	10^{-6}	2.2

(2) In the case of packages transported as exclusive use shipments by rail or highway only, the removable radioactive contamination at any time during transport shall not exceed 10 times the levels prescribed in paragraph 1 above. The levels at the beginning of transport shall not exceed the levels in paragraph 1 above.

II. EXTERNAL RADIATION LEVELS

External radiation levels around the package and around the vehicle, if applicable, will not exceed 200 millirems per hour (2 mSv/h) at any point on the external surface of the package at any time during transportation. The transport index shall not exceed 10. Notwithstanding these requirements, radiation levels external to a package transported in exclusive use by rail, highway or water may exceed these exceed these limits but shall not exceed any of the following:

(1) 200 millirems per hour (2 mSv/h) on the accessible external surface of the package unless the following conditions are met, in which case the limit is 1000 millirems per hour (10 mSv/h);

---

[1] T. . . . . C. . . SI . . . . . .

II. <u>EXTERNAL RADIATION LEVELS</u> [cont.]

(1) (a) The shipment is made in a closed transport vehicle;

(b) Provisions are made to secure the package so that its position within the vehicle remains fixed during transportation; and

(c) There are no loading or unloading operations between the beginning and end of the transportation.

(2) 200 millirems per hour (2 mSv/h) at any point on the outer surface of the vehicle, including the upper and lower surfaces, or, in the case of a flat-bed style vehicle, with a personnel barrier[2], at any point on the vertical planes projected from the outer edges of the vehicle, on the upper surface of the load [or enclosure, if used], and on the lower external surface of the vehicle;

(3) 10 millirems per hour (0.1 mSv/h) at any point 2 meters from the vertical planes represented by the outer lateral surfaces of the vehicle, or, in the case of a flat-bed style vehicle, at any point 2 meters from the vertical planes projected from the outer edges of the vehicle; and

(4) 2 millirems per hour (0.02 mSv/h) in any normally occupied positions of the vehicle, except that this provision does not apply to private motor carriers when persons occupying these positions are provided with special health supervision, personnel radiation exposure monitoring devices, and training in accordance with Section A.6.3 of these regulations.

A ... I ... S ...

RULES AND REGULATIONS FOR THE CONTROL OF RADIATION

(R23-1.3-RAD)

PART B

REGISTRATION OF X-RAY EQUIPMENT FACILITIES AND RADIATION PHYSICS SERVICES

JUNE 1978

As Amended:

October 1984
August 1991
February 1994
June 1999

PART B
REGISTRATION OF X-RAY EQUIPMENT FACILITIES AND RADIATION PHYSICS SERVICES

B.1 PURPOSE AND SCOPE

B.1.1 This part requires the registration of X-ray equipment facilities and the registration of persons providing installation and/or servicing of X-ray equipment to Agency registrants or radiation physics services to Agency registrants or licensees. For purposes of this part, particle accelerator facilities, whether used primarily for X-ray production or other purposes, shall be considered X-ray equipment facilities.

B.1.2 For purposes of part B of these regulations, "facility" means the location at which one or more X-ray systems are installed and/or located within one building or vehicle, and are under the same administrative control.

B.1.3 In addition to the requirements of this part, all registrants are subject to the applicable provisions of other parts of these regulations.

B.2 EXEMPTIONS

B.2.1 Electronic equipment that produces radiation incidental to its operation for other purposes is exempt from the registration and certification requirements of this part, providing dose equivalent rate averaged over an area of 10 square centimeters does not exceed 0.5 mrem (5 uSv) per hour at 5 cm from any accessible surface of such equipment. The production, testing, or factory servicing of such equipment shall not be exempt.

B.2.2 X-ray equipment while in transit or storage incident thereto is exempt from the requirements of this part.

B.2.3 Domestic television receivers are exempt from the requirements of this part.

B.3 APPLICATION FOR REGISTRATION OF X-RAY EQUIPMENT FACILITIES

Each person who owns or possesses and administratively controls an X-ray equipment facility, unless specifically exempted in B.2, shall:

B.3.1 (a) Apply for registration of such facility with the Agency prior to the operation of an X-ray equipment facility. Application for registration shall be completed on forms furnished by the Agency and shall contain all the information required by the form and accompanying instructions. The issuance of a Certificate of Registration for an X-ray equipment facility shall not preclude the Agency from subsequently reassigning the registered X-ray equipment to a more appropriate registration category and/or requiring the facility to periodically reregister all X-ray equipment at the facility. The registration category for a reassigned and/or reregistered facility will be determined in accordance with the provisions of Appendix C to this Part.

[REMAINDER OF PAGE INTENTIONALLY LEFT BLANK]

B.3.1(b)

(b) Prior to construction, the floor plans and equipment arrangement of all new facilities, or modifications of existing facilities, utilizing X-ray equipment and/or accelerators for shielded room radiography, research and development, or medical/veterinary diagnostic or therapeutic purposes, shall be submitted to the Agency for review. The required information for all X-ray equipment and accelerators, except therapeutic radiation machines, is denoted in Appendix A of this part.[1] The required information for therapeutic radiation machines is contained in Appendix A to Part H.

(c) Prior to routine use, but in no case later than thirty (30) days subsequent to installation of the radiation producing equipment and/or modification of the existing facility, the shielding shall be reviewed and evaluated by a person registered with the Agency to provide Health Physics Services.

(d) A written report of the shielding evaluation shall be provided to the facility within ten (10) days of the evaluation. The report must specifically address any shielding and/or radiation protection deficiencies that were discovered during the evaluation and shall include recommendations for correcting these deficiencies. Any noted deficiencies shall be adequately addressed by the facility.

(e) Facilities must provide the Agency with a copy of the shielding evaluation report within ten (10) days of receipt of said report.

(f) An Agency finding that an X-ray equipment facility meets appropriate radiation protection standards shall not preclude the requirement of additional modifications, should a subsequent analysis of operating conditions and/or a radiation survey indicate that an individual is likely to receive a dose in excess of the limits prescribed in Sections A.2.3, A.2.9 and A.2.11 of these regulations.

B.3.2 Designate on the application form an individual to be responsible for radiation protection.

B.3.3 Prohibit any person from furnishing X-ray equipment servicing or radiation physics services as described in B.4.4 of this part to his X-ray equipment facility until such person provides evidence that he is registered with the Agency as a provider of services in accordance with subpart B.4 of these regulations.

B.4 APPLICATION FOR REGISTRATION OF X-RAY EQUIPMENT SERVICING AND RADIATION PHYSICS SERVICES

B.4.1 Each person who is engaged in the business of installing or offering to install X-ray radiation equipment in this State, or is engaged in the business of furnishing or offering to furnish X-ray equipment servicing to an Agency registrant, or is engaged in the business of furnishing or offering to furnish radiation physics services to an Agency registrant or licensee shall apply for registration of such installation and/or servicing or radiation physics services with the Agency prior to furnishing or offering to furnish any such servicing or services.

B.4.2 Application for Registration shall be completed on forms furnished by the Agency and shall contain all information required by the Agency as indicated on the forms and accompanying instructions.

B.4.3 **Education and Experience Requirements for Providers of Radiation Physics Services.** In addition to the other requirements contained in this subpart, applicants for Radiation Physics Services must include documentation of the education and experience that qualify the applicant to discharge the Radiation Physics Services being requested. The minimum acceptable education and experience

---

[1] F. ..... H. .... P. .... S. .... A. .... A.

requirements are contained in Appendix B to this part. Applicants who do not explicitly meet the requirements contained in Appendix B to this part, but who believe they have a combination of training and/or practical experience equivalent to these requirements, may request special consideration of their situation and/or issuance of a limited Certificate of Registration by the Agency.

B.4.4

B.4.4 For the purpose of this subpart, X-ray equipment servicing and/or radiation physics services may include but shall not be limited to:

(a) Installation and/or servicing of X-ray equipment, and associated components;

(b) Calibration of X-ray equipment used by Agency registrants or radiation survey instruments used by Agency registrants or licensees;

(c) Radiation protection and/or radiation physics consultations or surveys, performed for Agency registrants or licensees;

(d) Personnel dosimetry services.

B.4.5 Persons offering the services described in B.4.4 shall not provide such services to any operational X-ray equipment facility or any facility utilizing radioactive materials in this state until such facility provides evidence that it has been registered or licensed with the Agency in accordance with Subpart B.3 or Part C of these regulations. Persons providing the services described in B.4.4 to a preoperational X-ray facility or facility intending to utilize radioactive material shall inform the facility of the registration or licensing requirements of these regulations.

B.5 CERTIFICATE OF REGISTRATION

B.5.1 No person who is required to be registered under this part shall operate an X-ray equipment facility or radiation physics service without a valid Certificate of Registration.

B.5.2 The Agency may incorporate in the Certificate of Registration at the time of issuance or thereafter by appropriate rule, regulation or order, such additional requirements and conditions with respect to the registrant's receipt, possession, use and transfer of radiation equipment as it deems appropriate or necessary.

B.5.3 A current Certificate of Registration or legible copy thereof shall be posted conspicuously at each registered facility.

B.5.4 Except as provided by B.5.6, each Certificate of Registration shall expire at the end of the specified day in the month and year stated therein.

B.5.5 Application for renewal of registration shall be filed in accordance with subpart B.3 or B.4 of this part.

B.5.6 In any case in which a registrant not less than 30 days prior to the expiration of his existing Certificate of Registration has filed an application in proper form for renewal, and has remitted the renewal fee, such existing Certificate of Registration shall not expire until the application status has been finally determined by the Agency.

[REMAINDER OF PAGE INTENTIONALLY LEFT BLANK]

B.6 REPORT OF CHANGES

The registrant shall notify the Agency in writing before making any change which would render the information contained in the Application for Registration and/or the Certificate of Registration no longer accurate. In the case of disposition of an X-ray system, such notification should specify the recipient of the system. In the case of modifications involving a structural change, or the addition or relocation of an X-ray system, the Agency may require the registrant to submit the information contained in Appendix A of this part.[1]

B.7 APPROVAL NOT IMPLIED

No person, in any advertisement, shall refer to the fact that he or his facility is registered with the Agency pursuant to the provisions of subpart B.3 or B.4 of this part and no person shall state or imply that any activity under such registration has been approved by the Agency.

B.8 ASSEMBLER AND/OR TRANSFER OBLIGATION

B.8.1 Any person who sells, leases, transfers, lends, disposes, assembles, or installs X-ray equipment in this State shall notify the Agency within 15 days of:

(a) The name and address of persons who have received this equipment.

(b) The manufacturer, model, and serial number of each X-ray system transferred; and

(c) The date of transfer of each X-ray system.

(d) In the case of diagnostic X-ray systems which contain certified components, a copy of the assembler's report prepared in compliance with requirements of the Federal Diagnostic X-ray Standard (21 CFR 1020.30(d)) shall be submitted to the Agency within 15 days following completion of the assembly. Such report shall suffice in lieu of any other report by the assembler.

B.8.2 No person shall make, sell, lease, transfer, lend, assemble, or install X-ray systems or the supplies used in connection with such system unless such supplies and equipment when properly placed in operation and used in this State shall meet the requirements of these regulations.

B.9 WAIVER OF REGISTRATION FOR TEMPORARY USE

B.9.1 Whenever any X-ray system is to be brought into the State, for any temporary use, the person proposing to bring such system into the State shall give written notice to the Agency at least two (2) working days before such machine is to be used in the State. The notice shall include the type of X-ray system; the nature, duration, and scope of use; and the exact location(s) where the X-ray system is to be used; and the state(s) in which the X-ray system is registered. Upon receipt of such notification, the Agency shall determine whether a waiver of registration will be granted.

B.9.2 In addition, the out-of-State person shall:

(a) Comply with all applicable regulations of the Agency;

(b) Supply the Agency with such other information as the Agency may reasonably request; and

(c) Not operate within the State on a temporary basis in excess of 180 calendar days per year.

B.10 REGISTRATION FEES

In accordance with authority granted to the Agency in Chapter 23-1.3-5 of the General Laws of Rhode Island, registration fees are payable to the Treasurer, State of Rhode Island by persons applying for registration. A current schedule of fees is available from the Agency. Upon approval of the application, the Agency will notify the applicant of the correct fee which is due. A Certificate of Registration will not be issued or renewed until the correct fee has been remitted. Fees which remain unpaid beyond the expiration date of the current Certificate of Registration may result in suspension of registration.

[REMAINDER OF PAGE INTENTIONALLY LEFT BLANK]

APPENDIX A
INFORMATION ON RADIATION SHIELDING REQUIRED FOR PLAN REVIEWS

1. Shielding plans are not required for the following type of X-ray equipment facilities:

(a) Any type of X-ray equipment which provides sufficient self-shielding to reduce the radiation levels at all external surfaces of the equipment below those levels required by Sections A.2.3, A.2.9 and A.2.11 of these regulations.

(b) Any X-ray equipment facility performing only dental intraoral and/or panoramic procedures whose estimated workload has been evaluated in accordance with NCRP Report 35, and it has been determined that existing structural configuration will provide sufficient shielding to reduce the radiation levels to those required by Sections A.2.3, A.2.9 and A.2.11 of these regulations.

2. All X-ray equipment facility shielding plans must comply with the following requirements:

(a) Basic facility information including: name and telephone number of the individual responsible for the shielding specifications; name and telephone number of the facility supervisor; and the street address [including room #(s)] of the facility. If applicable, also provide the individual's RPS registration number. The plan should also indicate whether this is a new structure or a modification to existing structure(s). If the facility is currently registered, the Agency registration number shall be provided.

(b) All wall, floor, and ceiling areas struck by the useful beam shall have primary barriers.

(c) Secondary barriers shall be provided in all wall, floor, and ceiling areas not requiring primary barriers.

(d) Shielding in walls of diagnostic X-ray facilities shall extend to a minimum height of seven feet above the floor.

3. In addition to the requirements listed in Section 2 above, the plans for all X-ray facilities which produce only photons with a maximum energy less than or equal to 150 keV shall contain, as a minimum, the following additional information:

(a) Equipment specifications including the make and model of the X-ray equipment, as well as the maximum technique factors.

(b) The maximum design workload for the facility in terms of milliamp-minutes or milliamp-seconds per week. The total anticipated number of exposures/films per day and/or week, as well as the type of examination(s) or treatment(s) which will be performed with the equipment, shall also be provided.

(c) A facility blueprint/drawing indicating: scale (0.25 inch = 1 foot is typical); direction of North; normal location of the X-ray system's radiation port(s); the port's travel and traverse limits; general direction(s) of the useful beam; locations of any windows and doors; and the location of the X-ray control panel. If the control panel is located inside the X-ray room, the location of the operator's booth shall be noted in the plan and the operator's station at the control panel shall be behind a protective barrier sufficient to assure compliance with Section A.2.3 of these regulations.

(d) In X-ray facilities designed for medical use, a window (of lead equivalent at least equal to that required for the adjacent barrier), mirror or other remote viewing system shall be provided and so placed that the operator can see the patient during the exposure without having to leave the protected area.

(e) The structural composition and thickness or lead/concrete equivalent of all walls, doors, partitions, floor, and ceiling of the room(s) concerned.

(f) The type of occupancy of all adjacent areas inclusive of space above and below the room(s) concerned. If there is an exterior wall, show distance to the closest area(s) where it is likely that individuals may be present.

4. In addition to the requirements listed in Item 2 above, the plans for all X-ray/ accelerator facilities which produce photons with a maximum energy in excess of 150 keV and/or electrons and/or neutrons, protons or other subatomic particles shall also contain the following information:

(a) Equipment specifications including: manufacturer and model number of the radiotherapy unit; rad (or rem) per minute at the isocenter; and the energy(s) and type(s) of radiation produced [ie: photon, electron, neutron]. The source to isocenter distance must be specified.

(b) Maximum design workload for the facility including total weekly radiation output [expressed in rad (or rem)/week @ 1 meter], total beam-on time per day or week. All facilities designed for the administration of radiotherapy must also include the average treatment time per patient, along with the anticipated number of patients to be treated per day or week.

(c) Facility blueprint/drawing (including both floor plan and elevation views) indicating position and orientation of the X-ray/accelerator unit, scale (0.25 inch = 1 foot is typical), type(s) and thickness of shielding material(s), direction of North, the locations and size of all penetrations through each shielding barrier (ceiling, walls and floor), as well as details of the door(s) and maze.

(d) The structural composition and thickness or lead/concrete equivalent of all walls, doors, partitions, floor, and ceiling of the room(s) concerned.

(e) The type of occupancy of all adjacent areas inclusive of space above and below the room(s) concerned. If there is an exterior wall, show distance to the closest area(s) where it is likely that individuals may be present.

(f) Description of all assumptions that were used in shielding calculations including, but not limited to, design energy [ie: room may be designed for 6 MeV unit although only a 4 MeV unit is currently proposed], presence of integral beam-stop in unit, workload, occupancy and use(s) of adjacent areas, fraction of time that primary beam will intercept each permanent barrier (walls, floor and ceiling) and "allowed" radiation exposure in both restricted and unrestricted areas.

(g) At least one example calculation which shows the methodology used to determine the amount of shielding required for each physical condition [ie: primary and secondary/ leakage barriers, restricted and unrestricted areas, small angle scatter, entry door(s) and maze] and shielding material in the facility.

[REMAINDER OF PAGE INTENTIONALLY LEFT BLANK]

APPENDIX B
EDUCATION AND EXPERIENCE REQUIREMENTS FOR RADIATION PHYSICS SERVICES

1. **Teletherapy/Radiotherapy Physics Services.** [Calibration and surveys of therapeutic X-ray equipment and/or medical accelerators and/or teletherapy units utilizing sealed radioactive sources.]

(a) Certification by the American Board of Radiology in:

(1) Therapeutic radiological physics;

(2) Roentgen-ray and gamma-ray physics;

(3) X-ray and radium physics; or

(4) Radiological physics.

(b) For calibration and surveys of teletherapy units utilizing sealed radioactive sources, the following education and experience may be substituted for the certification(s) described in Section 1(a) above.

(1) A master's or doctor's degree in physics, biophysics, radiological physics or health physics, and completion of one (1) year of full time training in therapeutic radiological physics and also one (1) year of full time work experience under the supervision of a Teletherapy Physicist at a medical institution. To meet this requirement, the individual shall have performed the tasks listed in Sections C.8.18, C.8.55, C.8.56 and C.8.57 under the supervision of a Teletherapy Physicist during the year of work experience.

(c) For calibration and surveys of therapeutic X-ray equipment (including medical accelerators) subject to Subparts F.7 or F.8 of these regulations, the following education and experience may be substituted for the certification(s) described in Section 1(a) above.

(1) Certification by the American Board of Medical Physics in Radiation Oncology Physics; or

(2) A master's or doctor's degree in radiological physics or health physics, and completion of one (1) year of full time training in therapeutic radiological physics and also two (2) years of full time work experience under the supervision of a Radiotherapy Physicist. As part of this requirement, the individual shall have performed the tasks listed in Sections F.7.17/F.8.22, F.7.18/F.8.24 and F.7.19/F.8.25 under the supervision of a Radiotherapy Physicist during the two (2) years of work experience; or

(3) A master's or doctor's degree in a physical science, and completion of one (1) year of full time training in therapeutic radiological physics and also three (3) years of full time work experience under the supervision of a Radiotherapy Physicist. As part of this requirement, the individual shall have performed the tasks listed in Sections F.7.17/F.8.22, F.7.18/F.8.24 and F.7.19/F.8.25 under the supervision of a Radiotherapy Physicist during the three (3) years of work experience.

2. **Diagnostic X-ray Physics Services.** [Calibration and surveys of diagnostic X-ray equipment.]

(a) Certification by the American Board of Radiology in:

(1) Radiological physics;

(2) Roentgen-ray and gamma-ray physics; or

(3) X-ray and radium physics; or

(4) Diagnostic radiological physics; or

(b) Certification by the American Board of Medical Physics in Diagnostic Imaging Physics; or

(c) Hold a master's or doctor's degree in radiological physics and submit documentation of appropriate experience in the area(s) for which registration is being requested. This experience must have been obtained under the supervision of an individual qualified to provide Diagnostic X-ray Physics Services; or

(d) Hold a master's or doctor's degree in health physics or other related radiation discipline and submit documentation of at least one (1) year of appropriate full time experience in the area(s) for which registration is being requested. This experience must have been obtained under the supervision of an individual qualified to provide Diagnostic X-ray Physics Services; or

(e) Hold a master's or doctor's degree in a physical science and submit documentation of at least two (2) years of appropriate full time training and experience in the area(s) for which registration is being requested. This experience must have been obtained under the supervision of an individual qualified to provide Diagnostic X-ray Physics Services; or

(f) Hold a bachelor's degree in health physics or other related radiation discipline and submit documentation of at least two (2) years of appropriate full time experience in the area(s) for which registration is being requested. This experience must have been obtained under the supervision of an individual qualified to provide Diagnostic X-ray Physics Services; or

(g) Hold a bachelor's degree in a physical science and submit documentation of at least three (3) years of appropriate full time training and experience in the area(s) for which registration is being requested. This experience must have been obtained under the supervision of an individual qualified to provide Diagnostic X-ray Physics Services.

3. **Health Physics Services.** [All general radiation physics services (except calibration of health physics instrumentation) for Agency registrants and/or radioactive materials licensees not covered in Sections 1 or 2 above.]

(a) Comprehensive certification by the American Board of Health Physics; or

(b) Certification by the American Board of Radiology in Radiological Physics or Medical Nuclear Physics; or

(c) Certification by the American Board of Medical Physics in Nuclear Medicine Physics or Medical Health Physics; or

(d) Hold a master's or doctor's degree in radiological physics or health physics or other related radiation discipline and submit documentation of appropriate experience in the area(s) for which registration is being requested. This experience must have been obtained under the supervision of an individual qualified to provide Health Physics Services; or

(e) Hold a master's or doctor's degree in a physical science and submit documentation of at least one (1) year of appropriate full time training and experience in the area(s) for which registration is being requested. This experience must have been obtained under the supervision of an individual qualified to provide Health Physics Services; or

(f) Hold a bachelor's degree in health physics or other related radiation discipline and submit documentation of at least one (1) year of appropriate full time experience in the area(s) for which registration is being requested. This experience must have been obtained under the supervision of an individual qualified to provide Health Physics Services; or

(g) Hold a bachelor's degree in a physical science and submit documentation of at least two (2) years of appropriate full time training and experience in the area(s) for which registration is being requested. This experience must have been obtained under the supervision of an individual qualified to provide Health Physics Services.

4. **Instrument Calibration Services.** [Calibration of health physics instrumentation for Agency registrants and/or radioactive materials licensees.]

(a) Compliance with the criteria required to perform any of the services contained in Sections 1, 2, or 3 above; or

(b) Hold at least a bachelor's degree in physics (or a closely related field such as electrical engineering) and submit documentation of at least 6 months of appropriate full time training and experience in the calibration of health physics instrumentation.

[REMAINDER OF PAGE INTENTIONALLY LEFT BLANK]

APPENDIX C
REGISTRATION CATEGORIES FOR FACILITIES AND SERVICES

CATEGORY I

(a) Facilities:

1. Facilities utilizing certified cabinet X-ray systems.

2. Facilities performing diagnostic radiography limited to veterinary procedures.

3. Facilities limited to storage of X-ray equipment, excluding X-ray equipment exempt from registration under these regulations.

(b) Individuals or facilities providing the following services:

1. Installation and/or servicing of X-ray equipment and associated components for Agency registrants.

2. NVLAP certified personnel dosimetry services for Agency registrants and/or radioactive materials licensees.

CATEGORY II

1. Facilities performing diagnostic radiography limited to chiropractic procedures;

2. Facilities performing diagnostic radiography limited to podiatric procedures.

3. Facilities performing diagnostic radiography limited to intra-oral dental procedures and/or extra-oral dental procedures, including panoramic and cephalometric procedures.

4. Facilities utilizing only specialized diagnostic radiography equipment including, but not limited to, CT scanners, therapy simulators, and dedicated mammography units.

5. Facilities performing only limited diagnostic radiographic procedures (ie: chest/extremities) and/or specific diagnostic radiographic procedures which are not included in any other human use registration category.

6. Facilities utilizing non-certified cabinet X-ray systems and/or X-ray units which are not included in any other non-human use registration category.

CATEGORY III

(a) Facilities:

1. Facilities performing industrial radiographic procedures.

2. Facilities performing radiation therapy procedures < 1 MeV.

3. Facilities performing radiation therapy procedures > 1 MeV.

4. Facilities operating particle accelerators not authorized for human use.

5. Facilities utilizing analytical X-ray equipment with an "open-beam" configuration.

(b) Individuals providing the following services:

1. Calibration of health physics instrumentation for Agency registrants and/or radioactive materials licensees.

2. Health Physics Services for Agency registrants and/or radioactive materials licensees.

3. Diagnostic X-ray Physics Services for Agency registrants.

4. Radiotherapy Physics Services for Agency registrants. [Calibration and surveys of therapeutic X-ray equipment, including medical accelerators].

5. Teletherapy Physics Services for Agency materials licensees. [Calibration and surveys of teletherapy units utilizing sealed radioactive sources].

CATEGORY IV

1. Facilities performing general purpose diagnostic radiographic procedures outside of an institution licensed by the State of Rhode Island as a hospital.

2. Facilities performing general purpose and specialized diagnostic radiographic procedures outside of an institution licensed by the State of Rhode Island as a hospital.

CATEGORY V

1. Facilities performing general purpose diagnostic radiographic procedures in an institution licensed by the State of Rhode Island as a hospital.

2. Facilities performing general purpose and specialized diagnostic radiographic procedures in an institution licensed by the State of Rhode Island as a hospital.

Facilities or services which are submitted to the Radiation Control Agency for registration, but which do not appear to meet the specific description of any category listed in this Appendix, shall be assigned to either Category II (facilities) or Category III (services) until such time as the Agency has conducted a field inspection to determine the appropriate registration category.

[REMAINDER OF PAGE INTENTIONALLY LEFT BLANK]

RULES AND REGULATIONS FOR THE CONTROL OF RADIATION

(R23-1.3-RAD)

PART C

LICENSING OF RADIOACTIVE MATERIAL AND USE OF RADIONUCLIDES IN THE HEALING ARTS

FEBRUARY 1979

As Amended:

June 1981
October 1984
February 1990
February 1990 (E)
August 1991
December 1993 (E)
February 1994
June 1995
June 1999

PART C
LICENSING OF RADIOACTIVE MATERIAL AND USE OF RADIONUCLIDES IN THE HEALING ARTS

C.1 GENERAL PROVISIONS

C.1.1 **Purpose and Scope.**

(a) This part provides for the licensing of radioactive material and use of radionuclides in the healing arts. No person shall receive, possess, use, transfer, own or acquire radioactive material except as authorized in a specific or general license issued pursuant to this part or as otherwise provided in this part.

(b) In addition to the requirements of this part, all licensees are subject to the requirements of part A of these regulations. Licensees engaged in industrial radio- graphic operations are subject to the requirements of Subpart E.2. Licensees engaged in wireline and/or subsurface tracer studies are subject to the requirements of Subpart E.4.

C.2 EXEMPTIONS

C.2.1 **Source Material.**

(a) Any person is exempt from this part to the extent that such person receives, possesses, uses, owns, or transfers source material in any chemical mixture, compound, solution, or alloy in which the source material is by weight less than 1/20 of 1 percent (0.05 percent) of the mixture, compound, solution, or alloy.

(b) Any person is exempt from this part to the extent that such person receives, possesses, uses, or transfers unrefined and unprocessed ore containing source material; provided that, except as authorized in a specific license, such person shall not refine or process such ore.

(c) Any person is exempt from this part to the extent that such person receives, possesses, uses, or transfers:

(1) Any quantities of thorium contained in:

(i) incandescent gas mantles,

(ii) vacuum tubes,

(iii) welding rods,

(iv) Electric lamps for illuminating purposes provided that each lamp does not contain more than 50 milligrams of thorium.

(v) germicidal lamps, sunlamps. and lamps for outdoor or industrial lighting provided that each lamp does not contain more than 2 grams of thorium,

(vi) rare earth metals and compounds, mixtures, and products containing not more than 0.25 percent by weight thorium, uranium, or any combination of these, or

(vii) personnel neutron dosimeters, provided that each dosimeter does not contain more than 50 milligrams of thorium;

(2) Source material contained in the following products:

(i) glazed ceramic tableware, provided that the glaze contains not more than 20 percent by weight source material,

(ii) glassware containing not more than 10 percent by weight source material, but not including commercially manufactured glass brick, pane glass, ceramic tile or other glass, glass enamel or ceramic used in construction, or

(iii) piezoelectric ceramic containing not more than 2 percent by weight source material;

(iv) glass enamel or glass enamel frit containing not more than 10 percent by weight source material imported or ordered for importation into the United States, or initially distributed by manufacturers in the United States before 25 July 1983;

(3) Photographic film, negatives, and prints containing uranium or thorium;

(4) Any finished product or part fabricated of, or containing, tungsten-thorium or magnesium-thorium alloys, provided that the thorium content of the alloy does not exceed 4 percent by weight and that this exemption shall not be deemed to authorize the chemical, physical, or metallurgical treatment or processing or any such product or part;

(5) Uranium contained in counterweights installed in aircraft, rockets, projectiles, and missiles, or stored or handled in connection with installation or removal of such counter-weights, provided that

(i) the counterweights are manufactured in accordance with a specific license issued by the U.S. Nuclear Regulatory Commission, authorizing distribution by the licensee pursuant to 10 CFR part 40,

(ii) each counterweight has been impressed with the following legend clearly legible through any plating or other covering: **"DEPLETED URANIUM"**,[1] and

(iii) each counterweight is durably and legibly labeled or marked with the identification of the manufacturer and the statement: **"UNAUTHORIZED ALTERATIONS PROHIB-ITED"**,[1] and

(iv) this exemption shall not be deemed to authorize the chemical, physical, or metallurgical treatment or processing of any such counterweights other than repair or restoration of any plating or other covering;

(6) Natural or depleted uranium metal used as shielding constituting part of any shipping container: Provided, that:

(i) the shipping container is conspicuously and legibly impressed with the legend **"CAUTION-RADIOACTIVE SHIELDING-URANIUM"**, and

(ii) the uranium metal is encased in mild steel or equally fire resistant metal of minimum wall thickness of one-eighth inch (3.2 mm).

(7) Thorium contained in finished optical lenses, provided that each lens does not contain more than 30 percent by weight of thorium, and that this exemption shall not be deemed to authorize either:

(i) the shaping, grinding, or polishing of such lenses or manufacturing processes other than the assembly of such lens into optical systems and devices without any alteration of the lens, or

(ii) the receipt, possession, use, or transfer of thorium contained in contact lenses, or in spectacles, or in eyepieces in binoculars or other optical instruments;

(8) Uranium contained in detector heads for use in fire detection units, provided that each detector head contains not more than 0.005 microcurie (185 Bq) of uranium; or

---

[1] CAUTION RADIOACTIVE MATERIAL

(9) thorium contained in any finished aircraft engine part containing nickel-thoria alloy, provided that:

(i) the thorium is dispersed in the nickel-thoria alloy in the form of finely divided thoria (thorium dioxide), and

(ii) the thorium content in the nickel-thoria alloy does not exceed 4 percent by weight.

(d) The exemptions in C.2.1(c) do not authorize the manufacturer of any of the products described.

C.2.2 **Radioactive Material Other Than Source Material.**

(a) **Exempt Concentrations.**

(1) Except as provided in C.2.2(a)(2), any person is exempt from this part to the extent that such person receives, possesses, uses, transfers, owns or acquires products containing radioactive material introduced in concentrations not in excess of those listed in Appendix A.

(2) No person may introduce radioactive material into a product or material knowing or having reason to believe that it will be transferred to persons exempt under C.2.2(a)(1) or equivalent regulations of the U.S. Nuclear Regulatory Commission, any Agreement State or Licensing State, except in accordance with a specific license issued pursuant to C.5.5(a) or the general license provided in C.6.1.

(b) **Exempt Quantities.**

(1) Except as provided in C.2.2(b)(2) and (3) any person is exempt from these regulations to the extent that such person receives, possesses, uses, transfers, owns, or acquires radioactive material in individual quantities each of which does not exceed the applicable quantity set forth in Appendix B of this part.

(2) This paragraph does not authorize the production, packaging or repackaging of radioactive material for purposes of commercial distribution, or the incorporation of radioactive material into products intended for commercial distribution.

(3) No person may, for purposes of commercial distribution, transfer radioactive material in the individual quantities set forth in Appendix B, knowing or having reason to believe that such quantities of radioactive material will be transferred to persons exempt under C.2.2(b) or equivalent regulations of the U.S. Nuclear Regulatory Commission, any Agreement State or Licensing State, except in accordance with a specific license issued by the U.S. Nuclear Regulatory Commission pursuant to Section 32.18 of 10 CFR Part 32 or by the Agency pursuant to C.5.5(b) which license states that the radioactive material may be transferred by the licensee to persons exempt under C.2.2(b) or the equivalent regulations of the U.S. Nuclear Regulatory Commission, any Agreement State or Licensing State.

(c) **Exempt Items.**

(1) **Certain Items Containing Radioactive Material.** Except for persons who apply radioactive material to, or persons who incorporate radioactive material into the following products, any person is exempt from these regulations to the extent that he receives, possesses, uses, transfers, owns, or acquires the following products:[2]

(i) Timepieces or hands or dials containing not more than the following specified quantities of radioactive material and not exceeding the following specified radiation dose rates:

---

[2] A. S. N. R. C. D. C.

(a) 25 millicuries (925 MBq) of tritium per timepiece,

YYY

(b) 5 millicuries (185 MBq) of tritium per hand,

(c) 15 millicuries (555 MBq) of tritium per dial (bezels when used shall be considered as part of the dial),

(d) 100 microcuries (3.7 MBq) of promethium-147 per watch or 200 microcuries (7.4 MBq) of promethium-147 per any other timepiece,

(e) 20 microcuries (0.74 MBq) of promethium-147 per watch hand or, 40 microcuries (1.48 MBq) of promethium-147 per other timepiece hand,

(f) 60 microcuries (2.22 MBq) of promethium-147 per watch dial or 120 microcuries (4.44 MBq) of promethium-147 per other time piece dial (bezels, when used, shall be considered as part of the dial),

(g) The radiation dose rate from hands and dials containing promethium-147 will not exceed, when measured through 50 milligrams per square centimeter of absorber:

(1) For wrist watches, 0.1 millirad (1 µGy) per hour at 10 centimeters from any surface

(2) For pocket watches, 0.1 millirad (1 µGy) per hour at 1 centimeter from any surface

(3) For any other timepiece, 0.2 millirad (2 µGy) per hour at 10 centimeters from any surface.

(h) one microcurie (37 kBq) of radium-226 per timepiece in time pieces acquired prior to the effective date of these regulations.

(ii) Lock illuminators containing not more than 15 millicuries (555 MBq) of tritium or not more than 2 millicuries (74 MBq) of promethium-147 installed in automobile locks. The radiation dose rate from each lock illuminator containing promethium-147 will not exceed 1 millirad (10 µGy) per hour at 1 centimeter from any surface when measured through 50 milligrams per square centimeter of absorber.

(iii) Precision balances containing not more than 1 millicurie (37 MBq) of tritium per balance or not more than 0.5 millicurie (18.5 MBq) of tritium per balance part.

(iv) Automobile shift quadrants containing not more than 25 millicuries (925 MBq) of tritium.

(v) Marine compasses containing not more than 750 millicuries (27.8 GBq) of tritium gas and other marine navigational instruments containing not more than 250 millicuries (9.25 GBq) of tritium gas.

(vi) Thermostat dials and pointers containing not more than 25 millicuries (925 MBq) of tritium per thermostat.

(vii) Electron tubes; provided, that each tube does not contain more than one of the following specified quantities of radioactive material:

(a) 150 millicuries (5.55 GBq) of tritium per microwave receiver protector tube or 10 millicuries (370 MBq) of tritium per any other electron tube;

(b) 1 microcurie (37 kBq) of cobalt-60;

(c) 5 microcuries (185 kBq) of nickel-63;

(d) 30 microcuries (1.11 MBq) of krypton-85;

(e) 5 microcuries (185 kBq) of cesium-137;

(f) 30 microcuries (1.11 MBq) of promethium-147;

YYY

And provided further, that the radiation dose rate from each electron tube containing radioactive material does not exceed 1 millirad (10 µGy) per hour at 1 centimeter from any surface when measured through 7 milligrams per square centimeter of absorber.[3]

(viii) Ionizing radiation measuring instruments containing, for purposes of internal calibration or standardization, one or more sources of radioactive material, provided that:

(a) Each source contains no more than one exempt quantity set forth in Appendix B of this part, and

(b) Each instrument contains no more than 10 exempt quantities. For purposes of this requirement, an instrument's source(s) may contain either one type or different types of radionuclides and an individual exempt quantity may be composed of fractional parts of one or more of the exempt quantities in Appendix B of this part, provided that the sum of such fractions shall not exceed unity.

(c) For purposes of this paragraph, 0.05 microcurie (1.85 kBq) of americium-241 is considered an exempt quantity under Appendix B of this part.

(ix) Spark gap irradiators containing not more than 1 microcurie (37 kBq) of cobalt-60 per spark gap irradiator for use in electrically ignited fuel oil burners having a firing rate of at least 3 gallons (11.4 liters) per hour.

(2) **Self-luminous products containing radioactive material.**

(i) Tritium, krypton-85, or promethium-147. Except for persons who manufacture, process, or produce self-luminous products containing tritium, krypton-85, or promethium-147, any person is exempt from these regulations to the extent that such person receives, possesses, uses, transfers, owns, or acquires tritium, krypton-85 or promethium-147 in self-luminous products manufactured, processed, produced, imported, or transferred in accordance with a specific license issued by the U.S. Nuclear Regulatory Commission pursuant to section 32.22 of 10 CFR part 32, which license authorizes the transfer of the product to persons who are exempt from regulatory requirements. The exemption in C.2.2(c)(2) does not apply to tritium, krypton-85 or promethium-147 used in products for frivolous purposes or in toys or adornments.

(ii) **Radium-226.** Any person is exempt from these regulations to the extent that such person receives, possesses, uses, transfers, or owns articles containing less than 0.1 microcurie of radium-226 (3.7 kBq) which were acquired prior to the effective date of these regulations.

(3) **Gas and aerosol detectors containing radioactive material.**

(i) Except for persons who manufacture, process, or produce gas and aerosol detectors containing radioactive material, any person is exempt from these regulations to the extent that such person receives, possesses, uses, transfers, owns, or acquires radioactive material in gas and aerosol detectors designed to protect life or property from fires and airborne hazards provided that detectors containing radioactive material shall have been manufactured, imported, or transferred in accordance with a specific license issued by the U.S. Nuclear Regulatory Commission[4] pursuant to section 32.26 of 10 CFR Part 32, or a

---

[3] F. . . . . C. . . . . .

[4] A. . . . . S. N. . . R. . . . . C. . . . . D. C. . . . . .

Licensing State, pursuant to C.5.5(c), which authorizes the transfer of the detectors to persons who are exempt from regulatory requirements.

(ii) Gas and aerosol detectors previously manufactured and distributed to general licensees in accordance with a specific license issued by an Agreement State shall be considered exempt under C.2.2(c)(3)(i), provided that the device is labeled in accordance with the specific license authorizing distribution of the generally licensed device, and provided further that they meet the requirement of C.5.5(c).

(iii) Gas and aerosol detectors containing NARM previously manufactured and distributed in accordance with a specific license issued by a Licensing State shall be considered exempt under C.2.2(c)(3)(i), provided that the device is labeled in accordance with the specific license authorizing distribution and provided further that they meet the requirements of C.5.5(c).

(4) **Resins containing scandium-46 and designed for sand consolidation in oil wells.** Any person is exempt from these regulations to the extent that such person receives, possesses, uses, transfers, owns or acquires synthetic plastic resins containing scandium-46 which are designed for sand consolidation in oil wells. Such resins shall have been manufactured or imported in accordance with a specific license issued by the U.S. Nuclear Regulatory Commission, or shall have been manufactured in accordance with the specifications contained in a specific license issued by the Agency or any Agreement State to the manufacturer of such resins pursuant to licensing requirements equivalent to those in sections 32.16 and 32.17 of 10 CFR part 32 of the regulations of the U.S. Nuclear Regulatory Commission. This exemption does not authorize the manufacture of any resins containing scandium-46.

(d) **Radioactive Drug: Capsules Containing Carbon-14 Urea for "In-Vivo" Diagnostic Use for Humans.**

(1) Except as provided in Subparagraphs C.2.2(d)(2) and (d)(3), any person is exempt from the requirements for a license pursuant to Subpart C.5 of these regulations provided that such person receives, possesses, uses, transfers, owns, or acquires capsules containing 37 kBq (1µCi) carbon-14 urea (allowing for nominal variation that may occur during the manufacturing process) each, for "in-vivo" use for humans.

(2) Any person who desires to use the capsules for research involving human subjects shall apply for and receive a specific license pursuant to Subpart C.5 of these regulations.

(3) Any person who desires to manufacture, prepare, process, produce, package, repackage, or transfer for commercial distribution such capsules shall apply for and receive a specific license from the U.S. Nuclear Regulatory Commission pursuant to 10 CFR 32.21.

(4) Nothing in Subparagraphs C.2.2(d)(1), (d)(2) &(d)(3) relieves persons from complying with applicable FDA, other Federal, and State requirements governing receipt, administration, and use of drugs.

C.3 LICENSEES

C.3.1 **Types of Licenses.** Licenses for radioactive materials are of two types: general and specific.

(a) General licenses provided in this part are effective without the filing of applications with the Agency or the issuance of licensing documents to the particular persons, although the filing of a certificate with the Agency may be required by the particular general license. The general licensee is subject to all other applicable portions of these regulations and any limitations of the general license.

(b) Specific licenses require the submission of an application to the Agency and the issuance of a licensing document by the Agency. The licensee is subject to all applicable portions of these regulations as well as any limitations specified in the licensing document.

[REMAINDER OF PAGE INTENTIONALLY LEFT BLANK]

C.4 GENERAL LICENSES

C.4.1 **General Licenses - Source Material.**

(a) A general license is hereby issued authorizing commercial and industrial firms, research, educational and medical institutions and Federal, State and Local government agencies to use and transfer not more than fifteen (15) pounds (6.82 kg) of source material at any one time for research, development, educational, commercial or operational purposes. A person authorized to use or transfer source material, pursuant to this general license, may not receive more than a total of 150 pounds (68.2 kg) of source material in any one calendar year.

(b) Persons who receive, possess, use, or transfer source material pursuant to the general license issued in C.4.1(a) are exempt from the provisions of Subparts A.1 - A.6 of these regulations to the extent that such receipt, possession, use, or transfer is within the terms of such general license; provided, however, that this exemption shall not be deemed to apply to any such person who is also in possession of source material under a specific license issued pursuant to this part.

(c) Persons who receive, possess, use or transfer source material pursuant to the general license in paragraph (a) of this section are prohibited from administering source material, or the radiation therefrom, either externally or internally, to human beings except as may be authorized by the Agency in a specific license.

(d) A general license is hereby issued authorizing the receipt of title to source material without regard to quantity. This general license does not authorize any person to receive, possess, use, or transfer source material.

(e) Depleted Uranium in Industrial Products and Devices.

(1) A general license is hereby issued to receive, acquire, possess, use or transfer, in accordance with the provisions of C.4.1(e)(2), (3), (4) and (5), depleted uranium contained in industrial products or devices for the purpose of providing a concentrated mass in a small volume of the product or device.

(2) The general license in C.4.1(e)(1) applies only to industrial products or devices which have been manufactured either in accordance with a specific license issued to the manufacturer of the products or devices pursuant to C.5.5(m) or in accordance with a specific license issued to the manufacturer by the U.S. Nuclear Regulatory Commission or an Agreement State which authorizes manufacture of the products or devices for distribution to persons generally licensed by the U.S. Nuclear Regulatory Commission or an Agreement State.

(3) (i) Persons who receive, acquire, possess, or use depleted uranium pursuant to the general license established by C.4.1(e)(1) shall file Agency Form GEN-1 "Registration Certificate - Use of Depleted Uranium Under General License," with the Agency. The form shall be submitted within 30 days after the first receipt or acquisition of such depleted uranium. The registrant shall furnish on Agency Form GEN-1 the following information and such other information as may be required by that form:

(a) name and address of the registrant;

(b) a statement that the registrant has developed and will maintain procedures designed to establish physical control over the depleted uranium described in C.4.1(e)(1) and designed to prevent transfer of such depleted uranium in any form, including metal scrap, to persons not authorized to receive the depleted uranium; and

(c) name and/or tile, address, and telephone number of the individual duly authorized to act for and on behalf of the registrant in supervising the procedure identified in C.4.1(e)(3)(i)(b).

(ii) The registrant possessing or using depleted uranium under the general license established by C.4.1(e)(1) shall report in writing to the Agency any changes in

information furnished by him in Agency Form GEN-1 "Registration Certificate-Use of Depleted Uranium Under General License." The report shall be submitted within 30 days after the effective date of such change.

YYYY

(4) A person who receives, acquires, possesses, or uses depleted uranium pursuant to the general license established by C.4.1(e)(1):

(i) Shall not introduce such depleted uranium, in any form, into a chemical, physical, or metallurgical treatment or process, except a treatment or process for repair or restoration of any plating or other covering of the depleted uranium.

(ii) Shall not abandon such depleted uranium.

(iii) Shall transfer or dispose of such depleted uranium only by transfer in accordance with the provisions of C.5.14. In the case where the transferee receives the depleted uranium pursuant to the general license established by C.4.1(e)(1), the transferor shall furnish the transferee a copy of this regulation and a copy of Agency Form GEN-1. In cases where the transferee receives the depleted uranium pursuant to a general license contained in the U.S. Nuclear Regulatory Commission's or Agreement State's regulation equivalent to C.4.1(e)(1), the transferor shall furnish the transferee a copy of this regulation and a copy of Agency Form GEN-1 accompanied by a note explaining that use of the product or device is regulated by the U.S. Nuclear Regulatory Commission or Agreement State under requirements substantially the same as those in this regulation.

(iv) Within 30 days of any transfer, shall report in writing to the Agency the name and address of the person receiving the depleted uranium pursuant to such transfer.

(v) Shall not export such depleted uranium except in accordance with a license issued by the U.S. Nuclear Regulatory Commission pursuant to Sections 40.23 and 40.33 of 10 CFR Part 40.

(5) Any person receiving, acquiring, possessing, using, or transferring depleted uranium pursuant to the general license established by C.4.1(e)(1) is exempt from the requirements of Subparts A.1 - A.6 of these regulations with respect to the depleted uranium covered by that general license.

C.4.2 **General Licenses - Radioactive Material other than Source Material.**

(a) **Certain Devices and Equipment.** A general license is hereby issued to transfer, receive, acquire, own, possess, and use radioactive material incorporated in the following devices or equipment which have been manufactured, tested and labeled by the manufacturer in accordance with a specific license issued to the manufacturer by the U.S. Nuclear Regulatory Commission for use pursuant to Section 31.3 of 10 CFR Part 31. This general license is subject to the provisions of C.2.2(a)(2), C.5.7, C.5.14, C.5.15, C.7.1 and Subpart A.[5]

(1) **Static Elimination Device.** Devices designed for use as static eliminators which contain, as a sealed source or sources, radioactive material consisting of a total of not more than 500 microcuries 18.5 MBq) of polonium-210 per device.

(2) **Ion Generating Tube.** Devices designed for ionization of air which contain, as a sealed source or sources, radioactive material consisting of a total of not more than 500 microcuries (18.5 MBq) of polonium-210 per device or a total of not more than 50 millicuries (1.85 GBq) of hydrogen-3 (tritium) per device.

(b) **Certain Measuring, Gauging and Controlling Devices.**

[REMAINDER OF PAGE INTENTIONALLY LEFT BLANK]

[5] A. . . . . A . . . . . .

C.4.2(b)(1)

(1) A general license is hereby issued to commercial and industrial firms and to research, educational and medical institutions, individuals in the conduct of their business, and state or local government agencies to own, receive, acquire, possess, use or transfer in accordance with the provisions of C.4.2(b)(2), (3), and (4), radioactive material, excluding special nuclear material, contained in devices designed and manufactured for the purpose of detecting, measuring, gauging, or controlling thickness, density, level, interface location, radiation, leakage, or qualitative or quantitative chemical composition, or for producing light or an ionized atmosphere.

(2) The general license in C.4.2(b)(1) applies only to radioactive material contained in devices which have been manufactured and labeled in accordance with the specifications contained in a specific license issued by the Agency pursuant to C.5.5(d) or in accordance with the specifications contained in a specific license issued by the U.S. Nuclear Regulatory Commission, an Agreement State or a Licensing State, which authorizes distribution of devices to persons generally licensed by the U.S. Nuclear Regulatory Commission, an Agreement State or a Licensing State.[6]

(3) Any person who owns, receives, acquires, possesses, uses or transfers radioactive material in a device pursuant to the general license in C.4.2(b)(1):

(i) shall assure that all labels affixed to the device at the time of receipt, and bearing a statement that removal of the label is prohibited, are maintained thereon and shall comply with all instructions and precautions provided by such labels;

(ii) shall assure that the device is tested for leakage of radioactive material and proper operation of the on-off mechanism and indicator, if any, at no longer than six-month intervals or at such other intervals as are specified in the label, however,

(a) devices containing only krypton need not be tested for leakage of radioactive material, and

(b) devices containing only tritium or not more than 100 microcuries (3.7 MBq) of other beta and/or gamma emitting material or 10 microcuries (0.37 MBq) of alpha emitting material and devices held in storage in the original shipping container prior to initial installation need not be tested for any purpose;

(iii) shall assure that the other testing, installation, servicing, and removal from installation involving the radioactive materials, its shielding or containment, are performed:

(a) in accordance with the instructions provided by the labels, or

(b) by a person holding an applicable specific license from the Agency, the U.S. Nuclear Regulatory Commission, an Agreement State or a Licensing State to perform such activities;

(iv) shall maintain records showing compliance with the requirements of C.4.2(b)(3)(ii) and (iii). The records shall show the results of tests. The records also shall show the dates of performance of, and the names of persons performing, testing, installation, servicing, and removal from installation concerning the radioactive material, its shielding or containment. Records of tests for leakage of radioactive material required by C.4.2(b)(3)(ii) shall be maintained for 1 year after the next required leak test is performed or until the sealed source is transferred or disposed of. Records of tests of the on/off mechanism and indicator required by C.4.2(b)(3)(ii) shall be maintained for 1 year after the next required test of the on/off mechanism and indicator is performed or until the sealed source is transferred or disposed of. Records which are required by C.4.2(b)(3)(iii) shall be maintained for

---

[6] R. . . . . F. . . . . F. . . . D. . . . . C. . . . . A. . . . . S. . . . . C. . . . . F. . . . . R. . . . . T. . . . . .

a period of 2 years from the date of the recorded event or until the device is transferred or disposed of;

(v) upon the occurrence of a failure of or damage to, any indication of a possible failure of or damage to, the shielding of the radioactive material or the on-off mechanism or indicator, or upon the detection of 0.005 microcurie (185 Bq) or more removable radioactive material, shall immediately suspend operation of the device until it has been repaired by the manufacturer or other person holding an applicable specific license from the Agency, the U.S. Nuclear Regulatory Commission, an Agreement State or a Licensing State to repair such devices, or disposed of by transfer to a person authorized by an applicable specific license to receive the radioactive material contained in the device and, within 30 days, furnish to the Agency a report containing a brief description of the event and the remedial action taken;

(vi) shall not abandon the device containing radioactive material;

(vii) except as provided in C.4.2(b)(3)(viii), shall transfer or dispose of the device containing radioactive material only by transfer to a specific licensee of the Agency, the U.S. Nuclear Regulatory Commission, an Agreement State or a Licensing State whose specific license authorizes him to receive the device and within 30 days after transfer of a device to a specific licensee shall furnish to the Agency a report containing identification of the device by manufacturer's name and model number and the name and address of the person receiving the device. No report is required if the device is transferred to the specific licensee in order to obtain a replacement device;

(viii) shall transfer the device to another general licensee only:

(a) where the device remains in use at a particular location. In such case the transferor shall give the transferee a copy of this regulation and any safety documents identified in the label on the device and within 30 days of the transfer, report to the Agency the manufacturer's name and model number of device transferred, the name and address of the transferee, and the name and/or position of an individual who may constitute a point of contact between the Agency and the transferee; or

(b) where the device is held in storage in the original shipping container at its intended location of use prior to initial use by a general licensee;

(ix) shall comply with the provisions of A.5.12 and A.5.13 of these regulations for reporting radiation incidents, theft, or loss of licensed material, but shall be exempt from the other requirements of Subparts A.1 - A.6 of these regulations.

(4) The general license in C.4.2(b)(1) does not authorize the manufacture of devices containing radioactive material.

(5) The general license provided in C.4.2(b)(1) is subject to the provisions of A.7, C.5.7, C.5.14, C.5.15 and C.7.1 of these regulations.

(c) **Luminous Safety Devices for Aircraft.**

(1) A general license is hereby issued to own, receive, acquire, possess, and use tritium or promethium-147 contained in luminous safety devices for use in aircraft, provided;

(i) each device contains not more than 10 curies (370 GBq) of tritium or 300 millicuries (11.1 GBq) of promethium-147; and

(ii) each device has been manufactured, assembled or imported in accordance with a specific license issued by the U.S. Nuclear Regulatory Commission, or each device has been manufactured or assembled in accordance with the specifications contained in a specific license issued by the Agency or any Agreement State to the manufacturer or assembler of such device pursuant to licensing requirements equivalent to those in section 32.53 of 10 CFR Part 32 of the regulations of the U.S. Nuclear Regulatory Commission.

(2) Persons who own, receive, acquire, possess, or use luminous safety devices pursuant to the general license in C.4.2(c)(1) are exempt from the requirements of Subparts A.1 - A.6 of these regulations except that they shall comply with the provisions of A.5.12 and A.5.13.

(3) This general license does not authorize the manufacture, assembly, or repair of luminous safety devices containing tritium or promethium-147.

(4) This general license does not authorize the ownership, receipt, acquisition, possession or use of promethium-147 contained in instrument dials.

(5) This general license is subject to the provisions of A.7, C.5.7, C.5.14, C.5.15 and C.7.1 of these regulations.

(d) **Ownership of Radioactive Material.** A general license is hereby issued to own radioactive material without regard to quantity. Notwithstanding any other provisions of this part, this general license does not authorize the manufacture, production, transfer, receipt, possession or use of radioactive material.

(e) **Calibration and Reference Sources.**

(1) A general license is hereby issued to those persons listed below to own, receive, acquire, possess, use, and transfer, in accordance with the provisions of C.4.2(e)(4) and (5), americium-241 in the form of calibration or reference sources:

(i) Any person who holds a specific license issued by the Agency which authorizes him to receive, possess, use, and transfer radioactive material; and

(ii) Any person who holds a specific license issued by the U.S. Nuclear Regulatory Commission which authorizes him to receive, possess, use, and transfer special nuclear material.

(2) A general license is hereby issued to own, receive, possess, use, and transfer plutonium in the form of calibration or reference sources in accordance with the provisions of C.4.2(e)(4) and (5) to any person who holds a specific license issued by the Agency which authorizes him to receive, possess, use, and transfer radioactive material.

(3) A general license is hereby issued to own, receive, possess, use, and transfer radium-226 in the form of calibration or reference sources in accordance with the provisions of C.4.2(e)(4) and (5) to any person who holds a specific license issued by the Agency which authorizes him to receive, possess, use and transfer radioactive material.

(4) The general licenses in C.4.2(e)(1), (2) and (3) apply only to calibration or reference sources which have been manufactured in accordance with the specifications contained in a specific license issued to the manufacturer or importer of the source by the U.S. Nuclear Regulatory Commission pursuant to Section 32.57 of 10 CFR Part 32 or Section 70.39 of 10 CFR Part 70 or which have been manufactured in accordance with the specifications contained in a specific license issued to the manufacturer by the Agency, any Agreement State or Licensing State pursuant to licensing requirements equivalent to those contained in Section 32.57 of 10 CFR Part 32 or Section 70.39 of 10 CFR Part 70 of the regulations of the U.S. Nuclear Regulatory Commission.

(5) The general licenses provided in C.4.2(e)(1), (2) and (3) are subject to the provisions of Part A, C.5.7, C.5.14, C.5.15, and C.7.1 of these regulations. In addition, persons who own, receive, acquire, possess, use, or transfer one or more calibration or reference sources pursuant to these general licenses:

(i) shall not possess at any one time, at any one location of storage or use, more than 5 microcuries (185 kBq) of americium-241, 5 microcuries (185 kBq) of plutonium, or 5 microcuries (185 kBq) of radium-226 in such sources;

(ii) shall not receive, possess, use or transfer such source unless the source, or the storage container, bears a label which includes one of the following statements as appropriate or a substantially similar statement which contains the information called for in one of the following statements as appropriate:

(a) The receipt, possession, use and transfer of this source, Model _____, Serial No. _____, are subject to a general license and the regulations of the U.S. Nuclear Regulatory Commission or of a State with which the Commission has entered into an agreement for the exercise of regulatory authority. Do not remove this label.

CAUTION - RADIOACTIVE MATERIAL - THIS SOURCE CONTAINS (AMERICIUM-241) (PLUTONIUM)[7] DO NOT TOUCH RADIOACTIVE PORTION OF THIS SOURCE.

_____
Name of manufacturer of importer

(b) The receipt, possession, use and transfer of this source, Model _____, Serial No. _____, are subject to a general license and the regulations of any Licensing State. Do not remove this label.

CAUTION - RADIOACTIVE MATERIAL - THIS SOURCE CONTAINS RADIUM-226. DO NOT TOUCH RADIOACTIVE PORTION OF THIS SOURCE.

_____
Name of manufacturer of importer

(iii) shall not transfer, abandon, or dispose of such source except by transfer to a person authorized by a license from the Agency, the U.S. Nuclear Regulatory Commission, an Agreement State or a Licensing State to receive the source;

(iv) shall store such source, except when the source is being used, in a closed container adequately designed and constructed to contain americium-241, plutonium, or radium-226 which might otherwise escape during storage; and

(v) shall not use such source for any purpose other than the calibration of radiation detectors or the standardization of other sources.

(6) These general licenses do not authorize the manufacture of calibration or reference sources containing americium-241, plutonium, or radium-226.

(f) **Medical Diagnostic Uses.**[8,9]

(1) A general license is hereby issued to any physician to receive, possess, transfer, or use radioactive material set forth below for the stated diagnostic uses, provided, however, that the use is in accordance with the provision of C.4.2(f)(2), (3), and (4), the radioactive material is in the form of capsules, disposable syringes, or other prepackaged individual doses; and the radioactive material has been manufactured in accordance with a specific license issued pursuant to C.5.5(g) by the Agency, the U.S. Nuclear Regulatory Commission, any Agreement State or a Licensing State authorizing distribution to persons generally licensed pursuant to this paragraph or its equivalent:

(i) Iodine-131 as sodium iodide ($Na^{131}I$) for measurement of thyroid uptake;

(ii) Iodine-131 as iodinated human serum albumin (IHSA) for determinations of blood and blood plasma volume;

(iii) Iodine-125 as iodinated human serum albumin (IHSA) for determinations of blood and blood plasma volume;

---

[7] S. . . . . .

[8] C. . . . . .

[9] T. . N. . D. . . . . F. . . . . F. . . . D. . . . . C. . . . . A. . . . . .

(iv) Cobalt-57 for the measurement of intestinal absorption of cyanocobalamin;

(v) Cobalt-58 for the measurement of intestinal absorption of cyanocobalamin;

(vi) Cobalt-60 for the measurement of intestinal absorption of cyanocobalamin; and

(vii) Chromium-51 as sodium radiochromate for determination of red blood cell volumes and studies of red blood cell survival time.

(2) No physician shall receive, possess, use, or transfer radioactive material pursuant to the general license established by C.4.2(f)(1) until he has filed Agency Form GEN-2 "Certificate-Medical Use of Radioactive Material Under General License" with the Agency and received from the Agency a validated copy of the form with certification number assigned. The generally licensed physician shall furnish on Agency Form GEN-2 the following information and such other information as may be required by that form:

(i) Name and address of the generally licensed physician;

(ii) A statement that the generally licensed physician is a duly licensed physician (authorized to dispense drugs) in the practice of medicine in this state; and

(iii) A statement that the generally licensed physician has appropriate radiation measuring instruments to carry out the diagnostic procedures for which he proposes to use radioactive material under the general license of C.4.2(f) and that he is competent in the use of such instruments.

(3) A physician who receives, possesses, or uses a pharmaceutical containing radioactive material pursuant to the general license established by C.4.2(f)(1) shall comply with the following:

(i) He shall not possess at any one time, pursuant to the general license in C.4.2(f)(1) more than:

(a) 200 microcuries (7.4 MBq) of iodine-131,

(b) 200 microcuries (7.4 MBq) of iodine-125,

(c) 5 microcuries (185 kBq) of cobalt-57,

(d) 5 microcuries (185 kBq) of cobalt-58,

(e) 5 microcuries (185 kBq) of cobalt-60, and

(f) 200 microcuries (7.4 MBq) of chromium-51;

(ii) He shall store the pharmaceutical until administered in the original shipping container, or a container providing equivalent radiation protection;

(iii) he shall use the pharmaceutical only for the uses authorized by C.4.2(f)(1);

(iv) he shall not administer the pharmaceutical to a woman with confirmed pregnancy or to a person under 18 years of age; and

(v) he shall not transfer the radioactive material to a person who is not authorized to receive it pursuant to a license issued by the Agency, the U.S. Nuclear Regulatory Commission, any Agreement State or Licensing State, or in any manner other than in the unopened, labeled shipping container as received from the supplier, except by administering it to a patient.

(4) The generally licensed physician possessing or using radioactive material under the general license of C.4.2(f)(1) shall report in duplicate to the Agency, any changes in the information furnished by him in the "Certificate - Medical Use of Radioactive Material Under

General License," Agency Form GEN-2. The report shall be submitted within 30 days after the effective date of such change.

YYYY

(5) Any person using radioactive material pursuant to the general license of C.4.2(f)(1) is exempt from the requirements of Subparts A.1 - A.6 of these regulations with respect to the radioactive material covered by the general license.

(g) **General License for Use of Radioactive Material for Certain In-Vitro Clinical or Laboratory Testing.**[10]

(1) A general license is hereby issued to any physician, veterinarian in the practice of veterinary medicine, clinical laboratory or hospital to receive, acquire, possess, transfer, or use, for any of the following stated tests, in accordance with the provisions of C.4.2(g)(2), (3), (4), (5) and (6), the following radioactive materials in prepackaged units for use in in-vitro clinical or laboratory tests not involving internal or external administration of radioactive material, or the radiation therefrom, to human beings or animals:

(i) Iodine-125 in units not exceeding 10 microcuries (370 kBq) each.

(ii) Iodine-131 in units not exceeding 10 microcuries (370 kBq) each.

(iii) Carbon-14 in units not exceeding 10 microcuries (370 kBq) each.

(iv) Hydrogen-3 (tritium) in units not exceeding 50 microcuries (1.85 MBq) each.

(v) Iron-59 in units not exceeding 20 microcuries (740 kBq) each.

(vi) Cobalt-57 in units not exceeding 10 microcuries (370 kBq) each.

(vii) Selenium-75 in units not to exceed 10 microcuries (370 kBq) each.

(viii) Mock Iodine-125 reference or calibration sources in units not exceeding 0.05 microcurie (1.85 kBq) of iodine-129 and 0.005 microcurie (185 Bq) of americium-241 each.

(2) No person shall receive, acquire, possess, use or transfer radioactive material pursuant to the general license established by C.4.2(g)(1) until he has filed Agency Form GEN-3 "Certificate - In-Vitro Testing with Radioactive Material Under General License," with the Agency and received from the Agency a validated copy of Agency Form GEN-3 with certification number assigned. The physician, clinical laboratory or hospital shall furnish on Agency Form GEN-3 the following information and such other information as may be required by that form;

(i) name and address of the physician, veterinarian, clinical laboratory or hospital;

(ii) the location of use; and

(iii) a statement that the physician, veterinarian in the practice of veterinary medicine, clinical laboratory or hospital has appropriate radiation measuring instruments to carry out in-vitro clinical or laboratory tests with radioactive material as authorized under the general license in C.4.2(g)(1) and that such tests will be performed only by personnel competent in the use of such instruments and in the handling of the radioactive material.

(3) A person who receives, acquires, possesses or uses radioactive material pursuant to the general license established by C.4.2(g)(1) shall comply with the following:

(i) The general license shall not possess at any one time, pursuant to the general license in C.4.2(g)(1), at any one location of storage or use, a total amount of iodine-125, iodine-131, selenium-75, iron-59, and/or cobalt-57 in excess of 200 microcuries (7.4 MBq).

---

[10] T.. N.. D... P..... F..... F.... D..... C..... A.. ....

(ii) The general licensee shall store the radioactive material, until used, in the original shipping container or in a container providing equivalent radiation protection.

YYYY

(iii) The general licensee shall use the radioactive material only for the uses authorized by C.4.2(g)(1).

(iv) The general licensee shall not transfer the radioactive material to a person who is not authorized to receive it pursuant to a license issued by the Agency, the U.S. Nuclear Regulatory Commission, any Agreement State or Licensing State, nor transfer the radioactive material in any manner other than in the unopened, labeled shipping container as received from the supplier.

(v) The general licensee shall dispose of the Mock Iodine-125 reference or calibration sources described in C.4.2(g)(1)(viii) as required by A.4.1 of these regulations.

(4) The general licensee shall not receive, acquire, possess, or use radioactive material pursuant to C.4.2(g)(1):

(i) Except as prepackaged units which are labeled in accordance with the provisions of an applicable specific license issued pursuant to C.5.5(h) or in accordance with the provisions of a specific license issued by the U.S. Nuclear Regulatory Commission, any Agreement State or Licensing State which authorizes the manufacture and distribution of iodine-125, iodine-131, carbon-14, hydrogen-3 (tritium), iron-59, selenium-75, cobalt-57, or Mock Iodine-125 to persons generally licensed under C.4.2 or its equivalent, and

(ii) unless one of the following statements, as appropriate, or a substantially similar statement which contains the information called for in one of the following statements, appears on a label affixed to each prepackaged unit or appears in a leaflet or brochure which accompanies the package:

(a) This radioactive material may be received, acquired, possessed, and used only by physicians, veterinarians in the practice of veterinary medicine, clinical laboratories or hospitals and only for in-vitro clinical or laboratory tests not involving internal or external administration of the material, or the radiation therefrom, to human beings or animals. Its receipt, acquisition, possession, use, and transfer are subject to the regulations and a general license of the U.S. Nuclear Regulatory Commission or of a state with which the Commission has entered into an agreement for the exercise of regulatory authority.

_____
Name of Manufacturer

(b) This radioactive material shall be received, acquired, possessed, and used only by physicians, clinical laboratories or hospitals and only for in-vitro clinical or laboratory tests not involving internal or external administration of the material, or the radiation therefrom, to human beings or animals. Its receipt, acquisition, possession, use and transfer are subject to the regulations and a general license of a Licensing State.

_____
Name of Manufacturer

(5) The physician, veterinarian, clinical laboratory or hospital possessing or using radioactive material under the general license of C.4.2(g)(1) shall report in writing to the Agency, any changes in the information furnished by him in the "Certificate - In-Vitro Testing with Radioactive Material Under General License," Agency Form GEN-3. The report shall be furnished within 30 days after the effective date of such change.

(6) Any person using radioactive material pursuant to the general license of C.4.2(g)(1) is exempt from the requirements of Subparts A.1 - A.6 of these regulations with respect to radioactive material covered by that general license, except that such persons using the Mock Iodine-125 described in C.4.2(g)(1)(viii) shall comply with the provisions of A.4.1, A.5.12 and A.5.13 of these regulations.

YYYY

C.4.2(h)

(h) **Ice Detection Devices.**

(1) A general license is hereby issued to own, receive, acquire, possess, use, and transfer strontium-90 contained in ice detection devices, provided each device contains not more than 50 microcuries (1.85 MBq) of strontium-90 and each device has been manufactured or imported in accordance with a specific license issued by the U.S. Nuclear Regulatory Commission or each device has been manufactured in accordance with the specifications contained in a specific license issued by the Agency or any Agreement State to the manufacturer of such device pursuant to licensing requirements equivalent to those in section 32.61 of 10 CFR Part 32 of the regulations of the U.S. Nuclear Regulatory Commission.

(2) Persons who own, receive, acquire, possess, use, or transfer strontium-90 contained in ice detection devices pursuant to the general license in C.4.2(h)(1).

(i) shall, upon occurrence of visually observable damage, such as a bend or crack or discoloration from overheating to the device, discontinue use of the device until it has been inspected, tested for leakage and repaired by a person holding a specific license from the U.S. Nuclear Regulatory Commission or an Agreement State to manufacture or service such devices; or shall dispose of the device pursuant to the provisions of A.4.1 of these regulations;

(ii) shall assure that all labels affixed to the device at the time of receipt, and which bear a statement which prohibits removal of the labels, are maintained thereon; and

(iii) are exempt from the requirements of Subparts A.1 - A.6 of these regulations except that such persons shall comply with the provisions of A.4.1, A.5.12 and A.5.13.

(3) This general license does not authorize the manufacture, assembly, disassembly or repair of strontium-90 in ice detection devices.

(4) This general license is subject to the provisions of A.7, C.5.7, C.5.14, C.5.15, and C.7.1 of these regulations.

C.4.3 **[DELETED]**

C.5 SPECIFIC LICENSES

C.5.1 **Filing Application for Specific Licenses.**

(a) Applications for specific licenses shall be filed in triplicate on a form prescribed by the Agency.

(b) The Agency may at any time after the filing of the original application, and before the expiration of the license, require further statements in order to enable the Agency to determine whether the application should be granted or denied or whether a license should be modified or revoked.

(c) Each application shall be signed by the applicant or licensee or a person duly authorized to act for on his behalf.

(d) An application for a license may include a request for a license authorizing one or more activities.

(e) In his application, the applicant shall submit the required information to the Agency without reference to previously submitted documents unless permission has been obtained from the Agency, in advance, to incorporate by reference information contained in previous applications, statements, or reports filed with the Agency. All references shall be clear and specific and shall contain all of the information needed for a particular item on the application.

YYYY

YYYY

C.5.1(f)

(f) Applications and documents submitted to the Agency may be made available for public inspection except that the Agency may withhold any document or part thereof from public inspection if disclosure of its content is not required in the public interest and would adversely affect the interest of a person concerned.

C.5.2 **General Requirements for the Issuance of Specific Licenses.** A license application will be approved if the Agency determines that:

(a) the applicant is qualified by reason of training and experience to use the material in question for the purpose requested in accordance with these regulations in such a manner as to minimize danger to public health and safety or property;

(b) the applicant's proposed equipment, facilities, and procedures are adequate to minimize danger to public health and safety or property;

(c) the issuance of the license will not be inimical to the health and safety of the public; and

(d) the applicant satisfies any applicable special requirements in C.5.3, C.5.4, C.5.5, C.5.16, or C.5.17.

(e) **Bonding Requirements** [Reserved].

(f) **Perpetual Care Requirements** [Reserved].

C.5.3 **Special Requirements for Issuance of Certain Specific Licenses for Radioactive Material.**

(a) **Human Use of Radioactive Material.** In addition to the requirements set forth in C.5.2 and C.8, a specific license for human use of radioactive material in institutions will be issued under the following conditions:

(1) If the application is for medical use sited in a medical institution, only the institution's management may apply. If the application is for medical use not cited in a medical institution, any person may apply.

(2) The Agency finds the applicant equipped and committed to observe the safety standards established by the Agency in these regulations for the protection of the public health and safety.

(b) **Human Use of Sealed Sources.** In addition to the requirements set forth in C.5.2 and C.8, a specific license for human use of sealed sources will be issued only if the applicant or, if the application is made by an institution, the individual user is a physician.

(c) **Use of Sealed Sources in Industrial Radiography.** In addition to the requirements set forth in C.5.2, a specific license for use of sealed sources in industrial radiography will be issued if:

(1) The applicant submits an adequate program for training radiographers and radiographer's assistants that meets the requirements of E.2.10.

(i) After 27 June 2000, a license applicant need not describe its initial training and examination program for radiographers in the subjects outlined in E.2.10(g).

(ii) From 1 July 1999 to 27 June 2000 a license applicant may affirm that all individuals acting as industrial radiographers will be certified in radiation safety by a certifying entity before commencing duty as radiographers. This affirmation substitutes for a description of its initial training and examination program for radiographers in the subjects outlined in E.2.10(g).

(2) The applicant submits procedures for verifying and documenting the certification status of radiographers and for ensuring that the certification of individuals acting as radiographers remains valid.

(3) The applicant submits written operating and emergency procedures as described in E.2.11.

YYYY

(4) The applicant submits a description of a program for inspections of the job performance of each radiographer and radiographer's assistant at intervals not to exceed 6 months as described in E.2.10(e).

(5) The applicant submits a description of the applicant's overall organizational structure as it applies to the radiation safety responsibilities in industrial radiography, including specified delegations of authority and responsibility.

(6) The applicant identifies and lists the qualifications of the individual(s) designated as the RSO (E.2.21) and potential designees responsible for ensuring that the licensee's radiation safety program is implemented in accordance with approved procedures.

(7) If an applicant intends to perform leak testing of sealed sources or exposure devices containing depleted uranium (DU) shielding, the applicant must describe the procedures for performing the test. The description must include the:

(i) Instrumentation to be used;

(ii) Method(s) of collecting the samples;

(iii) Qualifications of the person who will analyze the wipe samples; and

(iv) Method(s) of analyzing the samples.

(8) If the applicant intends to perform "in-house" calibrations of survey instruments the applicant must describe methods to be used and the relevant experience of the person(s) who will perform the calibrations. All calibrations must be performed according to the procedures described and at the intervals prescribed in E.2.5.

(9) The applicant identifies and describes the location(s) of all field stations and permanent radiographic installations.

(10) The applicant identifies the location(s) where all records required by this subpart and other parts of these regulations will be maintained.

(11) If a license application includes underwater radiography, a description of:

(i) Radiation safety procedures and radiographer responsibilities unique to the performance of underwater radiography;

(ii) Radiographic equipment and radiation safety equipment unique to underwater radiography; and

(iii) Methods for gas-tight encapsulation of equipment; and

(12) If an application includes offshore platform and/or lay-barge radiography, a description of:

(i) Transport procedures for radioactive material to be used in industrial radiographic operations;

(ii) Storage facilities for radioactive material; and

(iii) Methods for restricting access to radiation areas.

C.5.4 **<u>Special Requirements for Specific Licenses of Broad Scope</u>.** This section prescribes requirements for the issuance of specific licenses of broad scope for radioactive material ("broad licenses") and certain regulations governing holders of such licenses.[11]

---

[11] A. S. N. R. C. DC

(a) The different types of broad licenses are set forth below:

(1) A "Type A specific license of broad scope" is a specific license authorizing receipt, acquisition, ownership, possession, use and transfer of any chemical or physical form of the radioactive material specified in the license, but not exceeding quantities specified in the license, for any authorized purpose. The quantities specified are usually in the multicurie range.

(2) A "Type B specific license of broad scope" is a specific license authorizing receipt, acquisition, ownership, possession, use and transfer of any chemical or physical form of radioactive material specified in Appendix D, for any authorized purpose. The possession limit for a Type B broad license, if only one radionuclide is possessed thereunder, is the quantity specified for that radionuclide in Appendix D, Column I. If two or more radionuclides are possessed thereunder, the possession limit for each is determined as follows: For each radionuclide, determine the ratio of the quantity possessed to the applicable quantity specified in Appendix D, Column I, for that radionuclide. The sum of the ratios for all radionuclides possessed under the license shall not exceed unity.

(3) A "Type C specific license of broad scope" is a specific license authorizing receipt, acquisition, ownership, possession, use and transfer of any chemical or physical form of radioactive material specified in Appendix D, for any authorized purpose. The possession limit for a Type C broad license, if only one radionuclide is possessed thereunder, is the quantity specified for that radionuclide in Appendix D, Column II. If two or more radionuclides are possessed thereunder, the possession limit is determined for each as follows: For each radionuclide determine the ratio of the quantity possessed to the applicable quantity specified in Appendix D, Column II, for that radionuclide. The sum of the ratios for all radionuclides possessed under the license shall not exceed unity.

(b) An application for a Type A specific license of broad scope will be approved if:

(1) the applicant satisfies the general requirements specified in C.5.2;

(2) the applicant has engaged in a reasonable number of activities involving the use of radioactive material; and

(3) the applicant has established administrative controls and provisions relating to organization and management, procedures, record keeping, material control and accounting, and management review that are necessary to assure safe operations, including:

(i) the establishment of a radiation safety committee composed of such persons as a radiation safety officer, a representative of management, and persons trained and experienced in the safe use of radioactive material;

(ii) the appointment of a radiation safety officer who is qualified by training and experience in radiation protection, and who is available for advice and assistance on radiation safety matters; and

(iii) the establishment of appropriate administrative procedures to assure:

(a) control of procurement and use of radioactive material;

(b) completion of safety evaluation of proposed uses of radioactive material which take into consideration such matters as the adequacy of facilities and equipment, training and experience of the user, and the operating or handling procedures; and

(c) review, approval, and recording by the radiation safety committee of safety evaluations of proposed uses prepared in accordance with C.5.4(b)(3)(iii)(b) prior to use of the radioactive material.

(c) An application for a Type B specific license of broad scope will be approved if:

(1) the applicant satisfies the general requirements specified in C.5.2; and

(2) the applicant has established administrative controls and provisions relating to organization and management, procedures, record keeping, material control and accounting, and management review that are necessary to assure safe operations, including:

(i) the appointment of a radiation safety officer who is qualified by training and experience in radiation protection, and who is available for advice and assistance on radiation safety matters, and

(ii) the establishment of appropriate administrative procedures to assure:

(a) control of procurement and use of radioactive material,

(b) completion of safety evaluations of proposed uses of radioactive material which take into consideration such matters as the adequacy of facilities and equipment, training and experience of the user, and the operating or handling procedures, and

(c) review, approval, and recording by the radiation safety officer of safety evaluations of proposed uses prepared in accordance with C.5.4(c)(2)(ii)(b) prior to use of the radioactive material.

(d) An application for a Type C specific license of broad scope will be approved if:

(1) The applicant satisfies the general requirements specified in C.5.2;

(2) The applicant submits a statement that radioactive material will be used only by, or under the direct supervision, of individuals who have received:

(i) A college degree at the bachelor level, or equivalent training and experience, in the physical or biological sciences or in engineering, and

(ii) At least 40 hours of training and experience in the safe handling of radioactive material, and in the characteristics of ionizing radiation, units of radiation dose and quantities, radiation detection instrumentation, and biological hazards of exposure to radiation appropriate to the type and forms of radioactive material to be used; and

(3) The applicant has established administrative controls and provisions relating to procurement of radioactive material, procedures, record keeping, material control and accounting, and management review necessary to assure safe operations.

(e) Specific licenses of broad scope are subject to the following conditions:

(1) Unless specifically authorized, persons licensed pursuant to C.5.4 shall not:

(i) Conduct tracer studies in the environment involving direct release of radioactive material;

(ii) Receive, acquire, own, possess, use or transfer devices containing 100,000 curies (3.7 PBq) or more of radioactive material in sealed sources used for irradiation of materials;

(iii) Conduct activities for which a specific license issued by the Agency under C.5.3 or C.5.5 is required; or

(iv) Add or cause the addition of radioactive material to any food, beverage, cosmetic, drug, or other product designed for ingestion or inhalation by, or application to, a human being.

(2) Each Type A specific license of broad scope issued under this part shall be subject to the condition that radioactive material possessed under the license may only be used by, or under the direct supervision of, individuals approved by the licensee's radiation safety

committee.

(3) Each Type B specific license of broad scope issued under this part shall be subject to the condition that radioactive material possessed under the license may be used by, or under the direct supervision of, individuals approved by the licensee's radiation safety officer.

YYYY

(4) Each Type C specific license of broad scope issued under this part shall be subject to the condition that radioactive material possessed under the license may only be used by, or under the direct supervision of, individuals who satisfy the requirements of C.5.4(d).

(f) A licensee possessing a Type A specific license of broad scope for medical use is exempt from the following:

(1) The provisions of Paragraph C.8.2(e) of these regulations regarding additions to or changes in the areas of use only at the address specified in the license; and

(2) The provisions of Subparagraph C.8.3(a) of these regulations for an authorized user or an authorized nuclear pharmacist.

[REMAINDER OF PAGE INTENTIONALLY LEFT BLANK]

C.5.5 **<u>Special Requirements for a Specific License to Manufacture, Assemble, Repair, or Distribute Commodities, Products, or Devices which Contain Radioactive Material</u>.**

(a) **<u>Licensing the Introduction of Radioactive Material into Products in Exempt Concentrations</u>.**

(1) In addition to the requirements set forth in C.5.2, a specific license authorizing the introduction of radioactive material into a product or material owned by or in the possession of the licensee or another to be transferred to persons exempt under C.2.2(a)(1) will be issued if:

(i) The applicant submits a description of the product or material into which the radioactive material will be introduced, intended use of the radioactive material and the product or material into which it is introduced, method of introduction, initial concentration of the radioactive material in the product or material, control methods to assure that no more than the specified concentration is introduced into the product or material, estimated time interval between introduction and transfer of the product or material, and estimated concentration of the radioactive material in the product or material at the time of transfer; and

(ii) The applicant provides reasonable assurance that the concentrations of radioactive material at the time of transfer will not exceed the concentrations in Appendix A, that reconcentration of the radioactive material in concentrations exceeding those in Appendix A is not likely, that use of lower concentrations is not feasible, and that the product or material is not likely to be incorporated in any food, beverage, cosmetic, drug, or other commodity or product designed for ingestion or inhalation by, or application to a human being.

(2) Each person licensed under C.5.5(a) shall file an annual report with the Agency which shall identify the type and quantity of each product or material into which radioactive material has been introduced during the reporting period; name and address of the person who owned or possessed the product or material, into which radioactive material has been introduced, at the time of introduction; the type and quantity of radionuclide introduced into each such product or material; and the initial concentrations of the radionuclide in the product or material at time of transfer of the radioactive material by the licensee. If no transfers of radioactive material have been made pursuant to C.5.5(a) during the reporting period, the report shall so indicate. The report shall cover the year ending June 30, and shall be filed within 30 days thereafter.

(b) **<u>Licensing the Distribution of Radioactive Material in Exempt Quantities</u>.**[12]

(1) An application for a specific license to distribute NARM to persons exempted from these regulations pursuant to C.2.2(b) will be approved if:

(i) The radioactive material is not contained in any food, beverage, cosmetic, drug, or other commodity designed for ingestion or inhalation by, or application to, a human being:

(ii) The radioactive material is in the form of processed chemical elements, compounds, or mixtures, tissue samples, bioassay samples, counting standards, plated or encapsulated sources, or similar substances, identified as radioactive material and to be used for its radioactive properties, but is not incorporated into any manufactured or assembled commodity, product, or device intended for commercial distribution; and

(iii) The applicant submits copies of prototype labels and brochures and the Agency approves such labels and brochures.

(2) The license issued under C.5.5(b)(1) is subject to the following conditions:

---

[12] A. S. N. R. C. DC

YYYY

(i) No more than 10 exempt quantities shall be sold or transferred in any single transaction. However, an exempt quantity may be composed of fractional parts of one or more of the exempt quantity provided the sum of the fractions shall not exceed unity.

(ii) Each exempt quantity shall be separately and individually packaged. No more than 10 such packaged exempt quantities shall be contained in any outer package for transfer to persons exempt pursuant to C.2.2(b). The outer package shall be such that the dose rate at the external surface of the package does not exceed 0.5 millirem (5 µSv) per hour.

(iii) The immediate container of each quantity or separately packaged fractional quantity of radioactive material shall bear a durable, legible label which:

(a) Identifies the radionuclide and the quantity of radioactivity, and

(b) Bears the words "**Radioactive Material**".

(iv) In addition to the labeling information required by C.5.5(b)(2)(iii), the label affixed to the immediate container, or an accompanying brochure, shall:

(a) State that the contents are exempt from Licensing State requirements,

(b) Bear the words "**Radioactive Material--Not for Human Use--Introduction into Foods, Beverages, Cosmetics, Drugs, or Medicinals, or into Products Manufactured for Commercial Distribution is Prohibited--Exempt Quantities Should Not Be Combined**", and

(c) Set forth appropriate additional radiation safety precautions and instructions relating to the handling, use, storage, and disposal of the radioactive material.

(3) Each person licensed under C.5.5(b) shall maintain records identifying, by name and address, each person to whom radioactive material is transferred for use under C.2.2(b) or the equivalent regulations of a Licensing State, and stating the kinds and quantities of radioactive material transferred. An annual summary report stating the total quantity of each radionuclide transferred under the specific license shall be filed with the Agency. Each report shall cover the year ending June 30, and shall be filed within 30 days thereafter. If no transfers of radioactive material have been made pursuant to C.5.5(b) during the reporting period, the report shall so indicate.

(c) **Licensing the Incorporation of Naturally Occurring and Accelerator- Produced Radioactive Material into Gas and Aerosol Detectors.** An application for a specific license authorizing the incorporation of NARM into gas and aerosol detectors to be distributed to persons exempt under C.2.2(c)(3) will be approved if the application satisfies requirements equivalent to those contained in Section 32.26 of 10 CFR Part 32. The maximum quantity of radium-226 in each device shall not exceed 0.1 microcurie (3.7 kBq).

(d) **Licensing the Manufacture and Distribution of Devices to Persons Generally Licensed Under C.4.2(b).**

(1) An application for a specific license to manufacture or distribute devices containing radioactive material, excluding special nuclear material, to persons generally licensed under C.4.2(b) or equivalent regulations of the U.S. Nuclear Regulatory Commission, an Agreement State or a Licensing State will be approved if:

(i) the applicant satisfies the general requirements of C.5.2;

(ii) the applicant submits sufficient information relating to the design, manufacture, prototype testing, quality control, labels, proposed uses, installation, servicing, leak testing, operating and safety instructions, and potential hazards of the device to provide reasonable assurance that:

(a) the device can be safely operated by persons not having training in radiological protection;

(b) under ordinary conditions of handling, storage, and use of the device, the radioactive material contained in the device will not be released or inadvertently removed from the device, and it is unlikely that any person will receive in any period of one calendar quarter a dose in excess of 10% of the limits specified in A.2.3(a); and

(c) under accident conditions (such as fire and explosion) associated with handling, storage, and use of the device, it is unlikely that any person would receive an external radiation dose or dose commitment in excess of the following organ doses:

Whole body; head and trunk; active blood-forming organs; gonads; or lens of eye	15 rems (150 mSv)
Hands and forearms; feet and ankles; localized areas of skin averaged over areas no larger than 1 square centimeter	200 rems (2 Sv)
Other organs	50 rems (500 mSv)

(iii) Each device bears a durable, legible, clearly visible label or labels approved by the Agency, which contain in a clearly identified and separate statement:

(a) instructions and precautions necessary to assure safe installation, operation, and servicing of the device (documents such as operating and service manuals may be identified in the label and used to provide this information);

(b) the requirement, or lack of requirement, for leak testing, or for testing any on-off mechanism and indicator, including the maximum time interval for such testing, and the identification of radioactive material by isotope, quantity of radioactivity, and date of determination of the quantity; and

(c) the information called for in one of the following statements, as appropriate, in the same or substantially similar form:

(1) The receipt, possession, use, and transfer of this device, Model _____ [13], Serial No. _____[13], are subject to a general license or the equivalent and the regulations of the U.S. Nuclear Regulatory Commission or a State with which the U.S. Nuclear Regulatory Commission has entered into an agreement for the exercise of regulatory authority. This label shall be maintained on the device in a legible condition. Removal of this label is prohibited.

CAUTION-RADIOACTIVE MATERIAL

_____
(Name of manufacturer or distributor)

(2) The receipt, possession, use, and transfer of this device, Model _____ [13], Serial No. _____[13], are subject to a general license or the equivalent, and the regulations of a Licensing State. This label shall be maintained on the device in a legible condition. Removal of this label is prohibited.

CAUTION-RADIOACTIVE MATERIAL

_____
(Name of manufacturer or distributor)

---

[13] T. . . . . .

(2) In the event the applicant desires that the device be required to be tested at intervals longer than six months, either for proper operation of the on-off mechanism and indicator, if any, or for leakage of radioactive material or for both, he shall include in his application sufficient information to demonstrate that such longer interval is justified by performance characteristics of the device or similar devices and by design features which have a significant bearing on the probability or consequences of leakage of radioactive material from the device or failure of the on-off mechanism and indicator. In determining the acceptable interval for the test for leakage of radioactive material, the Agency will consider information which includes, but is not limited to:

(i) primary containment (source capsule);

(ii) protection of primary containment;

(iii) method of sealing containment;

(iv) containment construction materials;

(v) form of contained radioactive material;

(vi) maximum temperature withstood during prototype tests;

(vii) maximum pressure withstood during prototype tests;

(viii) maximum quantity of contained radioactive material;

(ix) radiotoxicity of contained radioactive material; and

(x) operating experience with identical devices or similarly designed and constructed devices.

(3) In the event the applicant desires that the general licensee under C.4.2(b), or under equivalent regulations of the U.S. Nuclear Regulatory Commission, an Agreement State or a Licensing State be authorized to install the device, collect the sample to be analyzed by a specific licensee for leakage of radioactive material, service the device, test the on-off mechanism and indicator, or remove the device from installation, he shall include in his application written instructions to be followed by the general licensee, estimated calendar quarter doses associated with such activity or activities, and bases for such estimates. The submitted information shall demonstrate that performance of such activity or activities by an individual untrained in radiological protection, in addition to other handling, storage, and use of devices under the general license, is unlikely to cause that individual to receive a calendar quarter dose in excess of 10% of the limits specified in A.2.3(a).

(4) Each person licensed under C.5.5(d) to distribute devices to generally licensed persons shall:

(i) Furnish a copy of the general license contained in C.4.2(b) to each person to whom he directly or through an intermediate person transfers radioactive material in a device for use pursuant to the general license contained in C.4.2(b).

(ii) Furnish a copy of the general license contained in the U.S. Nuclear Regulatory Commission's, Agreement State's or Licensing State's regulation equivalent to C.4.2(b), or alternatively, furnish a copy of the general license contained in C.4.2(b) to each person to whom he directly or through an intermediate person transfers radioactive material in a device for use pursuant to the general license of the U.S. Nuclear Regulatory Commission, the Agreement State or the Licensing State. If a copy of the general license in C.4.2(b) is furnished to such a person, it shall be accompanied by a note explaining that the use of the device is regulated by the U.S. Nuclear Regulatory Commission, Agreement State or Licensing State under requirements substantially the same as those in C.4.2(b).

(iii) Report to the Agency all transfers of such devices to persons for use under the general license in C.4.2(b). Such report shall identify each general licensee by name and address, and individual by name and/or position who may constitute a point of contact between the Agency and the general licensee, the type and model number of device transferred, and the quantity and type of radioactive material contained in the device. If one or more intermediate persons will temporarily possess the device at the intended place of use prior to its possession by the user, the report shall include identification of each intermediate person by name, address, contact, and relationship to the intended user. If no transfers have been made to persons generally licensed under C.4.2(b) during the reporting period, the report shall so indicate. The report shall cover each calendar quarter and shall be filed within 30 days thereafter.

(iv) **Reports to Other Agencies.**

(a) Report to the U.S. Nuclear Regulatory Commission all transfers of such devices to persons for use under the U.S. Nuclear Regulatory Commission general license in Section 31.5 of 10 CFR Part 31.

(b) Report to the responsible State agency all transfers of devices manufactured and distributed pursuant to C.5.5(d) for use under a general license in that State's regulations equivalent to C.4.2(b).

(c) Such reports shall identify each general licensee by name and address, an individual by name and/or position who may constitute a point of contact between the agency and the general licensee, the type and model of the device transferred, and the quantity and type of radioactive material contained in the device. If one or more intermediate persons will temporarily possess the device at the intended place of use prior to its possession by the user, the report shall include identification of each intermediate person by name, address, contact, and relationship to the intended user. The report shall be submitted within 30 days after the end of each calendar quarter in which such a device is transferred to the generally licensed person.

(d) If no transfers have been made to U.S. Nuclear Regulatory Commission licensees during the reporting period, this information shall be reported to the U.S. Nuclear Regulatory Commission.

(e) If no transfers have been made to general licensees within a particular State during the reporting period, this information shall be reported to the responsible State agency upon request of the agency.

(v) Keep records showing the name, address, and the point of contact for each general licensee to whom he directly or through an intermediate person transfers radioactive material in devices for use pursuant to the general license provided in C.4.2(b), or equivalent regulations of the U.S. Nuclear Regulatory Commission, an Agreement State or a Licensing State. The records should show the date of each transfer, the radionuclide and the quantity of radioactivity in each device transferred, the identity of any intermediate person, and compliance with the report requirements of C.5.5(d)(4).

(e) **Special Requirements for the Manufacture, Assembly, or Repair of Luminous Safety Devices for Use in Aircraft.** An application for a specific license to manufacture, assemble, or repair luminous safety devices containing tritium or promethium-147 for uses in aircraft, for distribution to persons generally licensed under C.4.2(c) will be approved subject to the following conditions:

(1) The applicant satisfies the general requirements specified in C.5.2 and

(2) The applicant satisfies the requirements of Sections 32.53, 32.54, 32.55, 32.56, 32.101 of 10 CFR Part 32 or their equivalent.

(f) **Special Requirements for License to Manufacture Calibration Sources Containing Americium-241, Plutonium or Radium-226 for Distribution to Persons Generally Licensed Under C.4.2(e).** An application for a specific license to manufacture calibration and reference sources containing americium-241, plutonium or radium-226 to persons generally licensed under C.4.2(e) will be approved subject to the following conditions:

(1) The applicant satisfies the general requirement of C.5.2, and

(2) The applicant satisfies the requirements of Sections 32.57, 32.58, 32.59, 32.60, 32.102 of 10 CFR Part 32 and Section 70.39 of 10 CFR Part 70 or their equivalent.

(g) **Manufacture and Distribution of Radioactive Material for Medical Use Under General License.** In addition to requirement set forth in C.5.2, a specific license authorizing the distribution of radioactive material for use by physicians under the general license in C.5.2(f) will be issued if:

(1) The applicant submits evidence that the radioactive material is to be manufactured, labeled, and packaged in accordance with a new drug application which the Commissioner of Food and Drugs, Food and Drug Administration, has approved, or in accordance with a license for a biologic product issued by the Secretary, Department of Health, Education and Welfare; and

(2) One of the following statements, as appropriate, or a substantially similar statement which contains the information called for in one of the following statements, appears on the label affixed to the container or appears in the leaflet or brochure which accompanies the package:

(i) This radioactive drug may be received, possessed, and used only by physicians licensed (to dispense drugs) in the practice of medicine. Its receipt, possession, use and transfer are subject to the regulations and a general license or its equivalent of the U.S. Nuclear Regulatory Commission or of a State with which the Commission has entered into an agreement for the exercise of regulatory authority.

_____
Name of manufacturer

(ii) This radioactive drug may be received, possessed, and used only by physicians licensed (to dispense drugs) in the practice of medicine. Its receipt, possession, use and transfer are subject to the regulations and a general license or its equivalent of a Licensing State.

_____
Name of manufacturer

(h) **Manufacture and Distribution of Radioactive Material for Certain In-vitro Clinical or Laboratory Testing Under General License.** An application for a specific license to manufacture or distribute radioactive material for use under the general license of C.4.2(g) will be approved if:

(1) The applicant satisfies the general requirement specified in C.5.2.

(2) The radioactive material is to be prepared for distribution in prepackaged units of:

(i) Iodine-125 in units not exceeding 10 microcuries (370 kBq) each.

(ii) Iodine-131 in units not exceeding 10 microcuries (370 kBq) each.

(iii) Carbon-14 in units not exceeding 10 microcuries (370 kBq) each.

(iv) Hydrogen-3 (tritium) in units not exceeding 50 microcuries (1.85 MBq) each.

(v) Iron-59 in units not exceeding 20 microcuries (740 kBq) each.

(vi) Cobalt-57 in units not exceeding 10 microcuries (370 kBq) each.

(vii) Selenium-75 in units not exceeding 10 microcuries (370 kBq) each.

YYYY

(viii) Mock Iodine-125 in units not exceeding 0.05 microcuries (185 kBq) of iodine-129 and 0.005 microcurie (185 Bq) of americium-241 each.

(3) Each prepackaged unit bears a durable, clearly visible label:

(i) Identifying the radioactive contents as to chemical form and radionuclide, and indicating that the amount of radioactivity does not exceed 10 microcuries (370 kBq) of iodine-125, iodine-131, carbon-14, cobalt-57, or selenium-75; 50 microcuries (1.85 MBq) of hydrogen-3 (tritium); 20 microcuries (740 kBq) of iron-59; or mock iodine-125 in units not exceeding 0.05 microcurie (1.85 kBq) of iodine-129 and 0.005 microcurie (185 Bq) of americium-241 each; and

(ii) Displaying the radiation caution symbol described in A.3.12(a) and the words, **"CAUTION, RADIOACTIVE MATERIAL"**, and **"Not for Internal or External Use in Humans or Animals"**.

(4) One of the following statements, as appropriate, or a substantially similar statement which contains the information called for in one of the following statements, appears on a label affixed to each prepackaged unit or appears in a leaflet or brochure which accompanies the package:

(i) This radioactive material may be received, acquired, possessed, and used only by physicians, veterinarians in the practice of veterinary medicine, clinical laboratories or hospitals and only for in-vitro clinical or laboratory tests not involving internal or external administration of the material, or the radiation therefrom, to human beings or animals. Its receipt, acquisition, possession, use and transfer are subject to the regulations and a general license of the U.S. Nuclear Regulatory Commission or of a State with which the Commission has entered into an agreement for the exercise of regulatory authority.

_____
Name of manufacturer

(ii) This radioactive material may be received, acquired, possessed, and used only by physicians, veterinarians in the practice of veterinary medicine, clinical laboratories or hospitals and only for in-vitro clinical or laboratory tests not involving internal or external administration of the material, or the radiation therefrom, to human being or animals. Its receipt, acquisition, possession, use, and transfer are subject to the regulations and a general license of a Licensing State.

_____
Name of manufacturer

(5) The label affixed to the unit, or the leaflet or brochure which accompanies the package, contains adequate information as to the precautions to be observed in handling and storing such radioactive material. In the case of the mock iodine-125 reference or calibration source, the information accompanying the source must also contain directions to the licensee regarding the waste disposal requirements set out in A.4.1 of these regulations.

(i) **Licensing the Manufacture and Distribution of Ice Detection Devices.** An application for a specific license to manufacture and distribute ice detection devices to persons generally licensed under C.4.2(h) will be approved subject to the following conditions:

(1) The applicant satisfies the general requirements of C.5.2, and

(2) The criteria of Sections 32.61, 32.62, 32.63, 32.103 of 10 CFR Part 32 are met.

(j) **Manufacture, Preparation, or Transfer for Commercial Distribution of Radioactive Drugs for Medical Use Under Subpart C.8**.

(1) An application for a specific license to manufacture, prepare, or transfer for

commercial distribution radioactive drugs for use by persons licensed pursuant to C.5.3(a) will be approved if:

(i) The applicant satisfies the general requirements specified in C.5.2 of this part;

(ii) The applicant submits evidence that the applicant is at least one of the following:

(a) registered or licensed with the U.S. Food and Drug Administration (FDA) as a drug manufacturer;

(b) licensed as a drug manufacturer in accordance with the Rules and Regulations Pertaining to Pharmacists, Pharmacies and Manufacturers, Wholesalers and Distributors [R5-19-PHAR] of the Rhode Island Department of Health; or;

(c) licensed as a pharmacy in accordance with the Rules and Regulations Pertaining to Pharmacists, Pharmacies and Manufacturers, Wholesalers and Distributors [R5-19-PHAR] of the Rhode Island Department of Health.

(iii) The applicant submits information on the radionuclide, chemical and physical form, maximum activity per vial, syringe, generator or other container of the radioactive drug, and shielding provided by the packaging to show it is appropriate for safe handling and storage of the radioactive drugs by medical use licensees; and

(iv) The applicant satisfies the following labeling requirements:

(a) A label is affixed to each transport radiation shield, whether it is constructed of lead, glass, plastic, or other material, of a radioactive drug to be transferred for commercial distribution. The label must include the radiation symbol and the words "**CAUTION, RADIOACTIVE MATERIAL**" or "**DANGER, RADIOACTIVE MATERIAL**", the name of the radioactive drug or its abbreviation, and the quantity of radioactivity at a specified date and time. For radioactive drugs with a half-life greater than 100 days, the time may be omitted.

(b) A label is affixed to each syringe, vial or other container used to hold a radioactive drug to be transferred for commercial distribution. The label must include the radiation symbol and the words "**CAUTION, RADIOACTIVE MATERIAL**" or "**DANGER, RADIOACTIVE MATERIAL**", and an identifier that ensures that the syringe, vial or other container can be correlated with the information on the transport radiation shield label.

(2) A licensee described by Subparagraph (1)(ii)(c) of this Section:

(i) May prepare radioactive drugs for medical use, as defined by these regulations, provided that the radioactive drug is prepared by either an authorized nuclear pharmacist as specified in Sub-paragraph (2)(ii) of this Section, or an individual under the supervision of an authorized nuclear pharmacist as specified in Section C.8.8 of these regulations.

(ii) May allow a pharmacist to work as an authorized nuclear pharmacist if:

(a) This individual qualifies as an authorized nuclear pharmacist as defined in these regulations; and

(b) This individual meets the requirements specified in Paragraph C.8.76(b) and Section C.8.74 of these regulations and the licensee has received an approved license amendment identifying this individual as an authorized nuclear pharmacist.

(3) A licensee shall possess and use instrumentation to measure the radioactivity of radioactive drugs. The licensee shall have procedures for use of the instrumentation. The licensee shall measure, by direct measurement or by combination of measurements and calculations, the amount of radioactivity in dosages of alpha-, beta- or photon-emitting radioactive drugs prior to transfer for commercial distribution. In addition the licensee shall:

(i) Perform tests before initial use, periodically, and following repair, on each

instrument for accuracy, linearity, and geometry dependance, as appropriate for the use of the instrument, and make adjustments when necessary; and

(ii) Check each instrument for constancy and proper operation at the beginning of each day of use.

YYYY

(4) Nothing in this section relieves the licensee from complying with applicable FDA, other Federal, and State requirements governing radioactive drugs.

(5) Notwithstanding the foregoing, no license shall be issued pursuant to this section until the applicant has also received all required approvals from the State Board of Pharmacy pursuant to the Rules and Regulations Pertaining to Pharmacists, Pharmacies and Manufacturers, Wholesalers and Distributors [R5-19-PHAR] of the Rhode Island Department of Health.

(k) **[RESERVED]**

(l) **Manufacture and Distribution of Sources or Devices Containing Radioactive Material for Medical Use.** An application for a specific license to manufacture and distribute sources and devices containing radioactive material to persons licensed pursuant to Paragraphs C.5.3(a) or C.5.3(b) for use as a calibration or reference source or for the uses listed in Sections C.8.38 or C.8.40 will be approved if:

(1) The applicant satisfies the general requirements in C.5.2 of this part.

(2) The applicant submits sufficient information regarding each type of source or device pertinent to an evaluation of its radiation safety, including:

(i) the radioactive material contained, its chemical and physical form, and amount,

(ii) details of design and construction of the source or device,

(iii) procedures for, and results of, prototype tests to demonstrate that the source or device will maintain its integrity under stresses likely to be encountered in normal use and accidents,

(iv) for devices containing radioactive material, the radiation profile of a prototype device,

(v) details of quality control procedures to assure that production sources and devices meet the standards of the design and prototype tests,

(vi) procedures and standards for calibrating sources and devices,

(vii) legend and methods for labeling sources and devices as to their radioactive content, and

(viii) instruction for handling and storing the source or device from the radiation safety standpoint; these instructions are to be included on a durable label attached to the source or device or attached to a permanent storage container for the source or device; provided, that instructions which are too lengthy for such label may be summarized on the label and printed in detail on a brochure which is referenced on the label.

(3) The label affixed to the source or device, or to the permanent storage container for the source or device, contains information on the radionuclide, quantity, and date of assay, and a statement that the Agency has approved distribution of the (name of source or device) to persons licensed to use radioactive material identified in Sections C.8.17, C.8.38 or C.8.40, as appropriate, and to persons who hold an equivalent licenses of the U.S. Nuclear Regulatory Commission, an Agreement State or a Licensing State.

(4) In the event the applicant desires that the source or device be required to be tested for leakage of radioactive material at intervals longer than six months, he shall include in his application sufficient information to demonstrate that such longer interval is justified by performance characteristics of the source or device or similar sources or devices and by design features that have a significant bearing on the probability or consequences of leakage of radioactive material from the source.

(5) In determining the acceptable interval for test of leakage of radioactive material, the Agency will consider information that includes, but is not limited to:

(i) primary containment (source capsule),

(ii) protection of primary containment,

(iii) method of sealing containment,

(iv) containment construction materials,

(v) form of contained radioactive material,

(vi) maximum temperature withstood during prototype tests,

(vii) maximum pressure withstood during prototype tests,

(viii) maximum quantity of contained radioactive material,

(ix) radiotoxicity of contained radioactive material, and

(x) operating experience with identical sources or devices or similarly designed and constructed sources or devices.

(m) **Requirements for License to Manufacture and Distribute Industrial Products Containing Depleted Uranium for Mass-Volume Applications.**

(1) An application for a specific license to manufacture industrial products and devices containing depleted uranium for use pursuant to C.4.1(d) or equivalent regulations of the U.S. Nuclear Regulatory Commission or an Agreement State will be approved if:

(i) the applicant satisfies the general requirements specified in C.5.2;

(ii) the applicant submits sufficient information relating to the design, manufacture, prototype testing, quality control procedures, labeling and marking, proposed uses, and potential hazards of the industrial product or device to provide reasonable assurance that possession, use, and transfer of the depleted uranium in the product or device is not likely to cause any individual to receive in any period of one calendar quarter a radiation dose in excess of 10 percent of the limits specified in A.2.3(a); and

(iii) the applicant submits sufficient information regarding the industrial product or device and the presence of depleted uranium for a mass-volume application in the product or device to provide reasonable assurance that unique benefits will accrue to the public because of the usefulness of the product or device.

(2) In the case of an industrial product or device whose unique benefits are questionable, the Agency will approve an application for a specific license under C.5.5(m) only if the product or device is found to combine a high degree of utility and low probability of uncontrolled disposal and dispersal of significant quantities of depleted uranium into the environment.

(3) The Agency may deny any application for a specific license under C.5.5(m) if the end use of the industrial product or device cannot be reasonably foreseen.

(4) Each person licensed pursuant to C.5.5(m)(1) shall:

(i) maintain the level of quality control required by the license in the manufacture of the industrial product or device, and in the installation of the depleted uranium into the product or device;

(ii) label or mark each unit to:

(a) identify the manufacturer of the product or device and the number of the license under which the product or device was manufactured, the fact that the product or device contains depleted uranium, and the quantity of depleted uranium in each product or device; and

(b) state that the receipt, possession, use, and transfer of the product or

device are subject to a general license or the equivalent and the regulations of the U.S. Nuclear Regulatory Commission or of an Agreement State;

YYYY

(iii) assure that the depleted uranium before being installed in each product or device has been impressed with the following legend clearly legible through any plating or other covering: "**Depleted Uranium**";

(iv) (a) furnish a copy of the general license contained in C.4.1(d) and a copy of Agency Form GEN-1 to each person to whom he transfers depleted uranium in a product or device for use pursuant to the general license contained in C.4.1(d), or

(b) furnish a copy of the general license contained in the U.S. Nuclear Regulatory Commission's or Agreement State's regulation equivalent to C.4.1(d) and a copy of the U.S. Nuclear Regulatory Commission's or Agreement State's certificate, or alternatively, furnish a copy of the general license contained in C.4.1(d) and a copy of Agency Form GEN-1 to each person to whom he transfers depleted uranium in a product or device for use pursuant to the general license of the U.S. Nuclear Regulatory Commission or an Agreement State, with a note explaining that use of the product or device is regulated by the U.S. Nuclear Regulatory Commission or an Agreement State under requirements substantially the same as those in C.4.1(d);

(v) report to the Agency all transfers of industrial products or devices to persons for use under the general license in C.4.1(d). Such report shall identify each general licensee by name and address, an individual by name and/or position who may constitute a point of contact between the Agency and the general licensee, the type and model number of device transferred, and the quantity of depleted uranium contained in the product or device. The report shall be submitted within 30 days after the end of each calendar quarter in which such a product or device is transferred to the generally licensed person. If no transfers have been made to persons generally licensed under C.4.1(d) during the reporting period, the report shall so indicate;

(vi) (a) report to the U.S. Nuclear Regulatory Commission all transfers of industrial products or devices to persons for use under the U.S. Nuclear Regulatory Commission general license in Section 40.25 of 10 CFR Part 40,

(b) report to the responsible State agency all transfers of devices manufactured and distributed pursuant to C.5.5(m) for use under a general license in that State's regulations equivalent to C.4.1(d),

(c) such report shall identify each general licensee by name and address, an individual by name and/or position who may constitute a point of contact between the agency and the general licensee, the type and model number of the device transferred, and the quantity of depleted uranium contained in the product or device. The report shall be submitted within 30 days after the end of each calendar quarter in which such product or device is transferred to the generally licensed person,

(d) if no transfers have been made to U.S. Nuclear Regulatory Commission licensees during the reporting period, this information shall be reported to the U.S. Nuclear Regulatory Commission,

(e) if no transfers have been made to general licensees within a particular Agreement State during the reporting period, this information shall be reported to the responsible Agreement State Agency; and

(vii) keep records showing the name, address, and point of contact for each general licensee to whom he transfers depleted uranium in industrial products or devices for use pursuant to the general license provided in C.4.4(d) or equivalent regulations of the U.S. Nuclear Regulatory Commission or of an Agreement State. The records shall be maintained for a period of two years and shall show the date of each transfer, the quantity of depleted uranium in each product or device

transferred, and compliance with the report requirements of this section.

YYYY

C.5.6 **Issuance of Specific Licenses.**

(a) Upon a determination that an application meets the requirements of the Act and the regulations of the Agency, the Agency will issue a specific license authorizing the proposed activity in such form and containing such conditions and limitations as it deems appropriate or necessary.

(b) The Agency may incorporate in any license at the time of issuance, or thereafter by appropriate rule, regulation, or order, such additional requirements and conditions with respect to the licensee's receipt, possession, use, and transfer of radioactive material subject to this part as it deems appropriate or necessary in order to:

(1) minimize danger to public health and safety or property;

(2) require such reports and the keeping of such records, and to provide for such inspections of activities under the license as may be appropriate or necessary; and

(3) prevent loss or theft of material subject to this part.

C.5.7 **Specific Terms and Conditions of License.**

(a) Each licensee issued pursuant to this part shall be subject to all the provisions of the Act, now or thereafter in effect, and to all rules, regulations and orders of the Agency.

(b) No license issued or granted under this part and no right to possess or utilize radioactive material granted by any license issued pursuant to this part shall be transferred, assigned, or in any manner disposed of either voluntarily or involuntarily, directly or indirectly, through transfer of control of any license to any person unless the Agency shall, after securing full information find that the transfer is in accordance with the provisions of the Act, and shall give its consent in writing.

(c) Each person licensed by the Agency pursuant to this part shall confine his use and possession of the material licensed to the locations and purposes authorized in the license.

(d) Each licensee preparing Technetium-99m radiopharmaceuticals from Molybdenum-99/ Technetium-99m generators shall test the generator eluates for Molybdenum-99 breakthrough in accordance with Section C.8.31.

(e) Each licensee shall notify the Agency in writing when he decides to permanently discontinue all activities involving materials authorized under the license. This notification requirement applies to all specific licenses issued under this part.

(f) (1) Each licensee shall notify the Agency, in writing, immediately following the filing of a voluntary or involuntary petition for bankruptcy under any Chapter of Title 11 (Bankruptcy) of the United States Code by or against:

(i) the licensee;

(ii) an entity (as that term is defined in 11 USC 101(14)) controlling the licensee or listing the license or licensee as property of the estate; or

(iii) an affiliate (as that term is defined in 11 USC 101(2)) of the licensee.

(2) This notification must indicate:

(i) The bankruptcy court in which the petition for bankruptcy was filed; and

(ii) The date of filing of the petition.

C.5.8 **Expiration and Termination of Licenses and Decommissioning of Sites and Separate Buildings or Outdoor Areas.**

(a) Each specific license revoked by the Agency expires at the end of the day on the date of the Agency's Final determination to revoke the license, or on the expiration date stated in the determination, or as otherwise provided by Agency Order.

(b) Each specific license continues in effect, beyond the expiration date if necessary, with respect to possession of radioactive material until the Agency notifies the licensee in writing that the license is terminated. During this time, the licensee shall:

(1) Limit actions involving radioactive material to those related to decommissioning; and

(2) Continue to control entry to restricted areas until they are suitable for release in accordance with Agency requirements.

(c) Within 60 days of the occurrence of any of the following, each licensee shall provide notification to the Agency in writing of such occurrence, and either begin decommissioning its site, or any separate building or outdoor area that contains residual radioactivity so that the building or outdoor area is suitable for release in accordance with Agency requirements, or submit within 12 months of notification a decommissioning plan, if required by Subparagraph (f)(1) of this Section, and begin decommissioning upon approval of that plan if:

(1) The license has expired pursuant to Paragraph (a) of this Section; or

(2) The licensee has decided to permanently cease principal activities, as defined in this part, at the entire site or in any separate building or outdoor area that contains residual radioactivity such that the building or outdoor area is unsuitable for release in accordance with Agency requirements; or

(3) No principal activities under the license have been conducted for a period of 24 months; or

(4) No principal activities have been conducted for a period of 24 months in any separate building or outdoor area that contains residual radioactivity such that the building or outdoor area is unsuitable for release in accordance with Agency requirements.

(d) Coincident with the notification required by Paragraph (c) of this Section, the licensee shall maintain in effect all decommissioning financial assurances established by the licensee pursuant to Section C.5.16 of these regulations in conjunction with a license issuance or renewal or as required by this Section, The amount of the financial assurance must be increased, or may be decreased, as appropriate, to cover the detailed cost estimate for decommissioning established pursuant to Paragraph (f)(4)(v) of this Section.

(1) Any licensee who has not provided financial assurance to cover the detailed cost estimate submitted with the decommissioning plan shall do so when this rule becomes effective 1 July 1999.

(2) Following approval of the decommissioning plan, a licensee may reduce the amount of the financial assurance as decommissioning proceeds and radiological contamination is reduced at the site with the approval of the Agency.

(e) The Agency may grant a request to extend the time periods established in Paragraph (c) of this Section if the Agency determines that this relief is not detrimental to the public health and safety and is otherwise in the public interest. The request must be submitted no later than 30 days before notification pursuant to Paragraph (c) of this Section. The schedule for decommissioning set forth in Paragraph (c) of this Section may not commence until the Agency has made a determination on the request.

(f) (1) A decommissioning plan must be submitted if required by license condition or if the procedures and activities necessary to carry out decommissioning of the site or separate building or outdoor area have not been previously approved by the Agency and these

procedures could increase potential health and safety impacts to workers or to the public, such as in any of the following cases:

(i) Procedures would involve techniques not applied routinely during cleanup or maintenance operations;

(ii) Workers would be entering areas not normally occupied where surface contamination and radiation levels are significantly higher than routinely encountered during operation;

(iii) Procedures could result in significantly greater airborne concentrations of radioactive materials than are present during operation; or

(iv) Procedures could result in significantly greater releases of radioactive material to the environment than those associated with operation.

(2) The Agency may approve an alternate schedule for submittal of a decommissioning plan required pursuant to Paragraph (c) of this Section if the Agency determines that the alternative schedule is necessary to the effective conduct of decommissioning operations and presents no undue risk from radiation to the public health and safety and is otherwise in the public interest.

(3) Procedures such as those listed in Paragraph (f)(1) of this Section with potential health and safety impacts may not be carried out prior to approval of the decommissioning plan.

(4) The proposed decommissioning plan for the site or separate building or outdoor area must include:

(i) A description of the conditions of the site or separate building or outdoor area sufficient to evaluate the acceptability of the plan;

(ii) A description of planned decommissioning activities;

(iii) A description of methods used to ensure protection of workers and the environment against radiation hazards during decommissioning;

(iv) A description of the planned final radiation survey; and

(v) An updated detailed cost estimate for decommissioning, comparison of that estimate with present funds set aside for decommissioning, and a plan for assuring the availability of adequate funds for completion of decommissioning.

(vi) For decommissioning plans calling for completion of decommissioning later than 24 months after plan approval, the plan shall include a justification for the delay based on the criteria in Paragraph (g) of this Section.

(5) The proposed decommissioning plan will be approved by the Agency if the information therein demonstrates that the decommissioning will be completed as soon as practicable and that the health and safety of workers and the public will be adequately protected.

(g) (1) Except as provided in Paragraph (h) of this Section, licensees shall complete decommissioning of the site or separate building or outdoor area as soon as practicable but no later than 24 months following the initiation of decommissioning.

(2) Except as provided in Paragraph (h) of this Section, when decommissioning involves the entire site, the licensee shall request license termination as soon as practicable but no later than 24 months following the initiation of decommissioning.

(h) The Agency may approve a request for an alternative schedule for completion of decommissioning of the site or separate building or outdoor area, and license termination if appropriate, if the Agency determines that the alternative is warranted by consideration of the following:

(1) Whether it is technically feasible to complete decommissioning within the allotted 24-month period;

(2) Whether sufficient waste disposal capacity is available to allow completion of decommissioning within the allotted 24-month period;

(3) Whether a significant volume reduction in wastes requiring disposal will be achieved by allowing short-lived radionuclides to decay;

(4) Whether a significant reduction in radiation exposure to workers can be achieved by allowing short-lived radionuclides to decay: and

(5) Other site-specific factors which the Agency may consider appropriate on a case-by-case basis, such as the regulatory requirements of other government agencies, lawsuits, ground-water treatment activities, monitored natural ground-water restoration, actions that could result in more environmental harm than deferred cleanup, and other factors beyond the control of the licensee.

(i) As the final step in decommissioning, the licensee shall:

(1) Certify the disposition of all licensed material, including accumulated wastes, by submitting a completed Agency Form MAT-7 or equivalent information; and

(2) Conduct a radiation survey of the premises where the licensed activities were carried out and submit a report of the results of this survey unless the licensee demonstrates that the premises are suitable for release in some other manner. The licensee shall, as appropriate:

(i) Report levels of gamma radiation in units of millisieverts (microroentgen) per hour at one meter from surfaces, and report levels of radioactivity, including megabecquerels (disintegrations per minute or microcuries) per 100 square centimeters (removable and fixed) for surfaces, mega-becquerels (microcuries) per milliliter for water, and becquerels (picocuries) per gram for solids such as soils or concrete; and

(ii) Specify the survey instruments used and certify that each instrument is properly calibrated and tested.

(j) Specific licenses, including expired licenses, will be terminated by written notice to the licensee when the Agency determines that:

(1) Radioactive material has been properly disposed;

(2) Reasonable effort has been made to eliminate residual radioactive contamination, if present; and

(3) (i) A radiation survey has been performed which demonstrates that the premises are suitable for release in accordance with Agency requirements.

(ii) Other information submitted by the licensee is sufficient to demonstrate that the premises are suitable for release in accordance with Agency requirements.

(4) Records required by C.5.15(e), (f) and (g) have been received.

C.5.9 **Renewal of Licenses.**

(a) Applications for renewal of specific licenses shall be filed in accordance with C.5.1.

(b) In any case in which a licensee, not less than 30 days prior to expiration of his existing license, has filed an application in proper form for renewal or for a new license authorizing the same activities, such existing license shall not expire until the application has been finally determined by the Agency.

C.5.10 **Amendment of Licenses at Request of Licensee.** (a) Applications for amendment of a license shall be filed in accordance with C.5.1 and shall specify the respects in which the licensee desires his license to be amended and the grounds for such amendment.

C.5.10(b)

(b) A licensee, except those licensees subject to Subpart C.8 of these regulations, may make minor changes in radiation safety procedures that are not potentially important to safety, i.e. ministerial changes, that were described in the application for license, renewal or amendment. Examples of such ministerial changes include: editing of procedures for clarity or conformance with local drafting policy or updating names, telephone numbers, and addresses; adoption of model radiation safety procedures published in NRC or Agency Regulatory Guides; replacement of equipment; reassignment of tasks among employees; or assignment of service contracts for services such as personnel dosimetry, radiation safety equipment repair or calibration, waste disposal, and safety surveys. A licensee is responsible for assuring that any change is in compliance with the requirements of these regulations and the license. Procedures for ministerial changes in licenses subject to Subpart C.8 are contained in Section C.8.75 of these regulations.

(c) A licensee shall retain a record of each change until the license has been renewed or terminated. The record must include the effective date of the change, a copy of the old and new radiation safety procedures, the reason for the change, a summary of radiation safety matters that were considered before making the change, the signature of the Radiation Safety Officer, and the signatures of the affected authorized users and of management.

(d) A copy of the record required by Paragraph C.5.10(c) of these regulations must be submitted to the Agency within thirty days of adopting said change(s).

C.5.11 **Agency Action on Applications to be Renew and Amend.** In considering an application by a licensee to renew or amend his license, the Agency will apply the criteria set forth in C.5.2 and C.5.3, C.5.4 or C.5.5 as applicable.

C.5.12 **[Reserved]**

C.5.13 **[Reserved]**

C.5.14 **Transfer of Material.**

(a) No licensee shall transfer radioactive material except as authorized pursuant to this section.

(b) Except as otherwise provided in his license and subject to the provisions of C.5.14(c) and (d), any licensee may transfer radioactive material:

(1) to the Agency;[14]

(2) to the U.S. Department of Energy;

(3) to any person exempt from the regulations in this part to the extent permitted under such exemption;

(4) to any person authorized to receive such material under terms of a general license or its equivalent, or a specific license or equivalent licensing document, issued by the Agency, the U.S. Nuclear Regulatory Commission, any Agreement State or any Licensing State, or to any person otherwise authorized to receive such material by the Federal Government or any agency thereof, the Agency, any Agreement State or any Licensing State; or

(5) as otherwise authorized by the Agency in writing.

---

[14] A ... A ... A ...

C.5.14(c)

(c) Before transferring radioactive material to a specific licensee of the Agency, the U.S. Nuclear Regulatory Commission, an Agreement State or a Licensing State, or to a general licensee who is required to register with the Agency, the U.S. Nuclear Regulatory Commission, an Agreement State or a Licensing State prior to receipt of the radioactive material, the licensee transferring the material shall verify that the transferee's license authorizes the receipt of the type, form, and quantity of radioactive material to be transferred.

(d) The following methods for the verification required by C.5.14(c) are acceptable:

(1) The transferor may have in his possession, and read, a current copy of the transferee's specific license or registration certificate;

(2) the transferor may have in his possession a written certification by the transferee that he is authorized by license or registration certificate to receive the type, form, and quantity of radioactive material to be transferred, specifying the license or registration certificate number, issuing agency, and expiration date;

(3) for emergency shipments the transferor may accept oral certification by the transferee that he is authorized by license or registration certificate to receive the type, form, and quantity of radioactive material to be transferred, specifying the licensee or registration certificate number, issuing agency, and expiration date; provided, that the oral certification is confirmed in writing within 10 days;

(4) the transferor may obtain other sources of information compiled by a reporting service from official records of the Agency, the U.S.Nuclear Regulatory Commission, the licensing agency of an Agreement State or a Licensing State as to the identity of licensees and the scope and expiration dates of licenses and registration; or

(5) when none of the methods of verification described in C.5.14(d)(1) to (4) are readily available or when a transferor desires to verify that information received by one of such methods is correct or up-to-date, the transferor may obtain and record confirmation from the Agency, the U.S. Nuclear Regulatory Commission, or the licensing agency of an Agreement State or a Licensing State that the transferee is licensed to receive the radioactive material.

(e) Preparation for shipment and transport of radioactive material shall be in accordance with the provisions of C.7.1 of this part.

C.5.15 **Modification, Revocation, and Termination of Licenses.**

(a) The terms and conditions of all licenses shall be subject to amendment, revision, or modification or the license may be suspended or revoked by reason of amendments to the Act, or by reason of rules, regulations, and orders issued by the Agency.

(b) Any license may be revoked, suspended, or modified, in whole or in part, for any material false statement in the application or any statement of fact required under provisions of the Act, or because of conditions revealed by such application or statement of fact or any report, record, or inspection or other means which would warrant the Agency to refuse to grant a license on an original application, or for violation of, or failure to observe any of the terms and conditions of the Act, or of the license, or of any rule, regulation, or order of the Agency.

(c) Except in cases of willfulness or those in which the public health, interest or safety requires otherwise, no license shall be modified, suspended, or revoked unless, prior to the institution of proceedings therefor, facts or conduct which may warrant such action shall have been called to the attention of the licensee in writing and the licensee shall have been accorded an opportunity to demonstrate or achieve compliance with all lawful requirements.

(d) The Agency may terminate a specific license upon request submitted by the licensee to the Agency in writing.

(e) Prior to license termination, each licensee authorized to possess radioactive material with a half-life greater than 120 days, in an unsealed form, shall forward the following records to the

Agency:

(1) Records of disposal of licensed material made under A.4.2, A.4.3, A.4.4 and A.4.5; and

(2) Records required by A.5.3(b)(4).

(f) If licensed activities are transferred or assigned in accordance with C.5.7(b), each licensee authorized to possess radioactive material, with a half-life greater than 120 days, in an unsealed form, shall forward the following records to the new licensee and the new licensee will be responsible for maintaining these records until the license is terminated:

(1) Records of disposal of licensed material made under A.4.2, A.4.3, A.4.4 and A.4.5; and

(2) Records required by A.5.3(b)(4).

(g) Prior to license termination, each licensee shall forward the records required by Section C.5.16(g) to the Agency.

C.5.16 **Financial Assurance and Recordkeeping for Decommissioning.**

(a) Each applicant for a specific license authorizing the possession and use of unsealed radioactive material of half-life greater than 120 days and in quantities exceeding 10^5 times the applicable quantities set forth in Appendix F to Part A of these regulations shall submit a decommissioning funding plan as described in Paragraph (e) of this section. The decommissioning funding plan must also be submitted when a combination of isotopes is involved if R divided by 10^5 is greater than 1 (unity rule), where R is defined here as the sum of the ratios of the quantity of each isotope to the applicable value in Appendix F to Part A of these regulations.

(b) Each applicant for a specific license authorizing possession and use of radioactive material of half-life greater than 120 days and in quantities specified in Paragraph (d) of this Section shall either-

(1) Submit a decommissioning funding plan as described in Paragraph (e) of this section; or

(2) Submit a certification that financial assurance for decommissioning has been provided in the amount prescribed by Paragraph (d) of this Section using one of the methods described in Paragraph (f) of this Section. For an applicant, this certification may state that the appropriate assurance will be obtained after the application has been approved and the license issued but before the receipt of licensed material. If the applicant defers execution of the financial instrument until after the license has been issued, a signed original of the financial instrument obtained to satisfy the requirements of Paragraph (f) of this Section must be submitted to the Agency before receipt of licensed material. If the applicant does not defer execution of the financial instrument, the applicant shall submit to the Agency, as part of the certification, a signed original of the financial instrument obtained to satisfy the requirements of Paragraph (f) of this Section.

(c) (1) Each holder of a specific license issued on or after 27 July 1990, which is of a type described in Paragraph (a) or (b) of this Section, shall provide financial assurance for decommissioning in accordance with the criteria set forth in this Section.

(2) Each holder of a specific license issued before 27 July 1990, which is of a type described in Paragraph (a) of this Section, shall submit, on or before 27 July 1990, a decommissioning funding plan or a certification of financial assurance for decommissioning in an amount at least equal to $750,000 in accordance with the criteria set forth in this Section. If the licensee submits the certification of financial assurance rather than a decommissioning funding plan at this time, the licensee shall include a decommissioning funding plan in any application for license renewal.

(3) Each holder of a specific license issued before 27 July 1990, which is of a type described in Paragraph (b) of this Section, shall submit, on or before 27 July 1990, a

certification of financial assurance for decommissioning or a decommissioning funding plan in accordance with the criteria set forth in this Section.

YYYY

(d) Table of required amounts of financial assurance for decommissioning by quantity of material:

Greater than 10^4 but less than or equal to 10^5 times the applicable quantities of Appendix F to Part A of these regulations in unsealed form. (For a combination of isotopes, if R, as defined in Paragraph (a) above, divided by 10^4 is greater than 1 but R divided by 10^5 is less than or equal to 1.).....$750,000.

Greater than 10^3 but less than or equal to 10^4 times the applicable quantities of Appendix F to Part A of these regulations in unsealed form. (For a combination of isotopes, if R, as defined in Paragraph (a) above, divided by 10^3 is greater than 1 but R divided by 10^4 is less than or equal to 1.).....$150,000.

Greater than 10^{10} times the applicable quantities of Appendix F to Part A of these regulations in sealed sources or plated foils. (For a combination of isotopes, if R, as defined in Paragraph (a) above, divided by 10^{10} is greater than 1.).....$75,000.

(e) Each decommissioning funding plan must contain a cost estimate for decommissioning and a description of the method of assuring funds for decommissioning from Paragraph (f) of this Section, including means for adjusting cost estimates and associated funding levels periodically over the life of the facility. The decommissioning funding plan must also contain a certification by the licensee that financial assurance for decommissioning has been provided in the amount of the cost estimate for decommissioning and a signed original of the financial instrument obtained to satisfy the requirements of Paragraph (f) of this Section.

(f) Financial assurance for decommissioning must be provided by one or more of the following methods:

(1) **Prepayment.** Prepayment is the deposit prior to the start of operation into an account segregated from licensee assets and outside the licensee's administrative control of cash or liquid assets such that the amount of funds would be sufficient to pay decommissioning costs. Prepayment may be in the form of a trust, escrow account, government fund, certificate of deposit, or deposit of government securities.

(2) **A surety method, insurance, or other guarantee method.** These methods guarantee that decommissioning costs will be paid. A surety method may be in the form of a surety bond, letter of credit, or line of credit. A parent company guarantee of funds for decommissioning costs based on a financial test may be used if the guarantee and test are as contained in Appendix E to this Part. A parent company guarantee may not be used in combination with other financial methods to satisfy the requirements of this Section. A guarantee of funds by the applicant or licensee for decommissioning costs based on a financial test may be used if the guarantee and test are as contained in Appendix E of this Part. A guarantee by the applicant or licensee may not be used in combination with any other financial methods to satisfy the requirements of this section or in any situation where the applicant or licensee has a parent company holding majority control of the voting stock of the company. Any surety method or insurance used to provide financial assurance for decommissioning must contain the following conditions:

(i) The surety method or insurance must be open-ended or, if written for a specified term, such as five years, must be renewed automatically unless 90 or more days prior to the renewal date, the issuer notifies the Agency, the beneficiary, and the licensee of its intention not to renew. The surety method or insurance must also provide that the full face amount be paid to the beneficiary automatically prior to the expiration without proof of forfeiture if the licensee fails to provide a replacement acceptable to the Agency within 30 days after receipt of notification of cancellation.

(ii) The surety method or insurance must be payable to a trust established for decommissioning costs. The trustees and trust must be acceptable to the Agency. An acceptable trustee includes any entity which has the authority to act as a trustee and whose trust operations are regulated and examined by a State or Federal agency.

(iii) The surety method or insurance must remain in effect until the Agency has terminated the license.

YYYY

(3) **<u>An external sinking fund in which deposits are made at least annually, coupled with a surety method or insurance, the value of which may decrease by the amount being accumulated in the sinking fund</u>.** An external sinking fund is a fund established and maintained by setting aside funds periodically in an account segregated from licensee assets and outside the licensee's administrative control in which the total amount of funds would be sufficient to pay decommissioning costs at the time termination of operations is expected. An external sinking fund may be in the form of a trust, escrow account, government fund, certificate of deposit, or deposit of government securities. The surety or insurance provisions must be as stated in Paragraph (f)(2) of this Section.

(4) In the case of State or local government licensees, a statement of intent containing a cost estimate for decommissioning or an amount based on the Table in Paragraph (d) of this Section, and indicating that funds for decommissioning will be obtained when necessary.

(g) Each person licensed under Parts C or E of these regulations shall keep records of information important to the decommissioning of the facility in an identified location until the site is released for unrestricted use. Before licensed activities are transferred or assigned in accordance with Section C.5.7, licensees shall transfer all records described in this paragraph to the new licensee. In this case, the new licensee will be responsible for maintaining these records until the license is terminated. If records of information important to the decommissioning of a facility are kept for other purposes, reference to these records and their locations may be used. Information the Agency considers important to decommissioning consists of:

(1) Records of spill or other unusual occurrences involving the spread of contamination in and around the facility, equipment or site. These records may be limited to instances where contamination remains after any cleanup procedures or when there is reasonable likelihood that contaminants may have spread to inaccessible areas as in the case of possible seepage into porous materials such as concrete. These records must include any known information on identification of involved nuclides, forms, quantities and concentrations.

(2) As-built drawings and modifications of structures and equipment in restricted areas where radioactive materials are used and/or stored, and of locations of possible inaccessible contamination such as buried pipes which may be subject to contamination. If required drawings are referenced, each relevant document need not be indexed individually. If drawings are not available, the licensee shall substitute appropriate records of available information concerning these area and locations.

(3) Except for areas containing only sealed sources (provided the sources have not leaked or no contamination remains after any leak) of radioactive materials having only half-lives of less than 65 days, a list contained in a single document and updated every 2 years of the following:

(i) All areas designated and formally designated restricted areas as defined in these regulations; and

(ii) All areas outside of restricted areas that require documentation under Subparagraph C.5.16(g)(1) of these regulations; and

(iii) All areas outside of restricted areas where current and previous wastes have been buried as documented under Section A.5.9 of these regulations; and

(iv) All areas outside of restricted areas which contain material such that, if the license expired, the licensee would be required to either decontaminate the area to unrestricted release levels or apply for approval for disposal under Section A.4.1 of these regulations.

(4) Records of the cost estimate performed for the decommissioning funding plan or of the amount certified for decommissioning, and records of the funding method used for assuring funds if either a funding plan or certification is used.

C.5.17 **Consideration of the Need for an Emergency Plan for Responding to a Release of Radioactive Materials.**

(a) Each application to possess radioactive materials in unsealed form, on foils or plated sources, or sealed in glass in excess of the quantities in Appendix F to this Part must contain either:

(1) An evaluation showing that the maximum dose to a person offsite due to a release of radioactive materials would not exceed 1 rem effective dose equivalent or 5 rems to the thyroid; or

(2) An emergency plan for responding to a release of radioactive material.

(b) One or more of the following factors may be used to support an evaluation submitted under C.5.17(a)(1):

(1) The radioactive material is physically separated so that only a portion could be involved in an accident;

(2) All or part of the radioactive material is not subject to release during an accident because of the way it is stored or packaged;

(3) The release fraction in the respirable size range would be lower that the release fraction shown in Appendix F to this Part due to the chemical or physical form of the material;

(4) The solubility of the radioactive material would reduce the dose received;

(5) Facility design or engineered safety features in the facility would cause the release fraction to be lower than shown in Appendix F to this Part;

(6) Operating restrictions or procedures would prevent a release fraction as large as that shown in Appendix F to this Part;

(7) Other factors appropriate for the specific facility.

(c) An emergency plan for responding to a release of radioactive material submitted under C.5.17(a)(2) must include the following information:

(1) **Facility Description.** A brief description of the licensee's facility and area near the site.

(2) **Types of Accidents.** An identification of each type of radioactive materials accident for which protective actions may be needed.

(3) **Classification of Accidents.** A classification system for classifying accidents as alerts or site area emergencies.

(4) **Detection of Accidents.** Identification of the means of detecting each type of accident in a timely manner.

(5) **Mitigation of Consequences.** A brief description of the means and equipment for mitigating the consequences of each type of accident, including those provided to protect workers onsite, and a description of the program for maintaining the equipment.

(6) **Assessment of Releases.** A brief description of the methods and equipment to assess releases of radioactive materials.

(7) **Responsibilities.** A brief description of the responsibilities of licensee personnel should an accident occur, including identification of personnel responsible for promptly notifying offsite response organizations and the Agency; also responsibilities for developing, maintaining, and updating the plan.

[REMAINDER OF PAGE INTENTIONALLY LEFT BLANK]

(8) **Notification and Coordination.** A commitment to and a brief description of the means to promptly notify offsite response organizations and request offsite assistance, including medical assistance for the treatment of injured onsite workers when appropriate. A control point must be established. The notification and coordination must be planned so that unavailability of some personnel, parts of the facility, and some equipment will not prevent the notification and coordination. The licensee shall also commit to notify the Agency immediately after notification of the appropriate offsite response organizations and not later than one hour after the licensee declares an emergency.[15]

(9) **Information to be Communicated.** A brief description of the types of information on facility status, radioactive releases, and recommended protective actions, if necessary, to be given to offsite response organizations and to the Agency.

(10) **Training.** A brief description of the frequency, performance objectives and plans for training that the licensee will provide workers on how to respond to an emergency including any special instructions and orientation tours the licensee would offer to fire, police, medical and other emergency personnel. The training shall familiarize personnel with site-specific emergency procedures. Also, the training shall thoroughly prepare site personnel for their responsibilities in the event of accident scenarios postulated as most probable for the specific site, including the use of team training for such scenarios.

(11) **Safe Shutdown.** A brief description of the means of restoring the facility to a safe condition after an accident.

(12) **Exercises.** Provisions for conducting quarterly communications checks with the offsite response organizations and biennial onsite exercises to test response to simulated emergencies. Quarterly communications checks with offsite response organizations must include the check and update of all necessary telephone numbers. The licensee shall invite offsite response organizations to participate in the biennial exercises. Participation of offsite response organizations in biennial exercises although recommended is not required. Exercises must use accident scenarios postulated as most probable for the specific site and the scenarios shall not be known to most exercise participants. The licensee shall critique each exercise using individuals not having direct implementation responsibility for the plan. Critiques of exercises must evaluate the appropriateness of the plan, emergency procedures, facilities, equipment, training of personnel, and overall effectiveness of the response. Deficiencies found by the critiques must be corrected.

(13) **Hazardous Chemicals.** A certification that the applicant has met its responsibilities under the Emergency Planning and Community Right-to-Know Act of 1986, Title III, Pub. L. 99-499, if applicable to the applicant's activities at the proposed place of use of the radioactive material.

(d) The licensee shall allow the offsite response organizations expected to respond in case of an accident 60 days to comment on the licensee's emergency plan before submitting it to the Agency. The licensee shall provide any comments received within the 60 days to the Agency with the emergency plan.

C.6

C.6 RECIPROCITY

C.6.1 Reciprocal Recognition of Licenses.

(a) **Licenses of Byproduct, Source, and Special Nuclear Material in Quantities Not Sufficient to Form a Critical Mass.**

(1) Subject to these regulations, any person who holds a specific license from the U.S.

T. . . . . E. . . . . P. . . . . C. . . . . R. . . . . A. . . . . T. . . III. P. . . L. . . . . .

Nuclear Regulatory Commission or any Agreement State, and issued by the agency having jurisdiction where the licensee maintains an office for directing the licensed activity and at which radiation safety records are normally maintained, is hereby granted a general license to conduct the activities authorized in such licensing document within this State for a period not in excess of 180 days in any calendar year provided that:

(i) the licensing document does not limit the activity authorized by such document to specified installations or locations;

(ii) the out-of-state licensee notifies the Agency in writing at least three (3) days prior to engaging in such activity. Such notification shall indicate the location, period and type of proposed possession and use within the State, and shall be accompanied by a copy of the pertinent licensing document. If, for a specific case, the three (3) day period would impose an undue hardship on the out-of-state licensee, he may, upon application to the Agency, obtain permission to proceed sooner. The Agency may waive the requirement for filing additional written notifications during the remainder of the calendar year following the receipt of the initial notification from a person engaging in activities under the general license provided in C.6.1(a)(1);

(iii) the out-of-state licensee complies with all applicable regulations of the Agency and with all the terms and conditions of his licensing document, except any such terms and conditions which may be inconsistent with applicable regulations of the Agency;

(iv) the out-of-state licensee supplies such other information as the Agency may request; and

(v) the out-of-state licensee shall not transfer or dispose of radioactive material possessed or used under the general license provided in C.6.1(a)(1) except by transfer to a person:

(a) specifically licensed by the Agency or by the U.S. Nuclear Regulatory Commission to receive such material, or

(b) exempt from the requirements for a license for such material under C.2.2(a).

(2) Notwithstanding the provisions of C.6.1(a)(1), any person who holds a specific license issued by the U.S. Nuclear Regulatory Commission or an Agreement State authorizing the holder to manufacture, transfer, install, or service a device described in C.4.2(b)(1) within areas subject to the jurisdiction of the licensing body is hereby granted a general license to install, transfer, demonstrate or service such a device in this State provided that:

(i) such person shall file a report with the Agency within 30 days after the end of each calendar quarter in which any device is transferred to or installed in this State. Each such report shall identify each general licensee to whom such device is transferred by name and address, the type of device transferred, and the quantity and type of radioactive material contained in the device;

(ii) the device has been manufactured, labeled, installed, and serviced in accordance with applicable provisions of the specific license issued to such person by the U.S. Nuclear Regulatory Commission or an Agreement State;

(iii) such person shall assure that any labels required to be affixed to the device under regulations of the authority which licensed manufacture of the device bear a statement that "Removal of this label is prohibited;" and

(iv) the holder of the specific license shall furnish to each general licensee to whom he transfers such device or on whose premises he installs such device a copy of the general license contained in C.4.2(b).

(3) The Agency may withdraw, limit, or qualify its acceptance of any specific license or equivalent licensing document issued by another agency, or any product distributed pursuant to such licensing document, upon determining that such action is necessary in order to prevent undue hazard to public health and safety or property.

[REMAINDER OF PAGE INTENTIONALLY LEFT BLANK]

YYYY

(b) **Licenses of Naturally-Occurring and Accelerator-Produced Radioactive Material.**

(1) Subject to these regulations, any person who holds a specific license from any Licensing State, and issued by the agency having jurisdiction where the licensee maintains an office for directing the licensed activity and at which radiation safety records are normally maintained, is hereby granted a general license to conduct the activities authorized in such licensing document within this State for a period not in excess of 180 days in any calendar year provided that:

(i) the licensing document does not limit the activity authorized by such document to specified installations or locations;

(ii) the out-of-state licensee notifies the Agency in writing at least three (3) days prior to engaging in such activity. Such notification shall indicate the location, period, and type of proposed possession and use within the State, and shall be accompanied by a copy of the pertinent licensing document. If, for a specific case, the three (3) day period would impose an undue hardship on the out-of-state licensee, he may, upon application to the Agency, obtain permission to proceed sooner. The Agency may waive the requirement for filing additional written notifications during the remainder of the calendar year following the receipt of the initial notification from a person engaging in activities under the general license provided in C.6.1(b)(1);

(iii) The out-of-state licensee complies with all applicable regulations of the Agency and with all the terms and conditions of his licensing document, except any such terms and conditions which may be inconsistent with applicable regulations of the Agency;

(iv) the out-of-state licensee supplies such other information as the Agency may request; and

(v) the out-of-state license shall not transfer or dispose of radioactive material possessed or used under the general license provided in C.6.1(b)(1) except by transfer to a person;

(a) specifically licensed by the Agency or by another Licensing State to receive such material, or

(b) exempt from the requirements for a license for such material under C.2.2.

(2) Notwithstanding the provisions of C.6.1(b)(1), any person who holds a specific license issued by a Licensing State authorizing the holder to manufacture, transfer, install, or service a device described in C.4.2(b)(1) within areas subject to the jurisdiction of the licensing body is hereby granted a general license to install, transfer, demonstrate or service such a device in this State provided that:

(i) such person shall file a report with the Agency within 30 days after the end of each calendar quarter in which any device is transferred to or installed in this State. Each such report shall identify each general licensee to whom such device is transferred by name and address, the type of device transferred, and the quantity and type of radioactive material contained in the device;

(ii) the device has been manufactured, labeled, installed, and serviced in accordance with applicable provisions of the specific license issued to such person by a Licensing State;

(iii) such person shall assure that any labels required to be affixed to the device under regulations of the authority which licensed manufacture of the device bear a statement that "Removal of this label is prohibited;" and

(iv) the holder of the specific license shall furnish to each general licensee to whom he transfers such device or on whose premises he installs such device a copy of the

general license contained in C.4.2(b).

(3) The Agency may withdraw, limit, or qualify its acceptance of any specific license or equivalent licensing document issued by a Licensing State, or any product distributed pursuant to such licensing document, upon determining that such action is necessary in order to prevent undue hazard to public health and safety or property.

C.7 TRANSPORTATION

C.7.1 **Transportation of Radioactive Material.**

(a) No person shall deliver radioactive material to a carrier for transport or transport radioactive material except as authorized in a general or specific license issued by the Agency or as exempted in C.7.2.

(b) No licensee shall transport any radioactive material outside of the confines of his plant or other place of use, or deliver any licensed material to a carrier for transport, unless the licensee complies with the applicable requirements of the regulations appropriate to the mode of transport, of the Department of Transportation in 49 CFR Parts 170-189, and the U.S. Postal Service in the Postal Service Manual (Domestic Mail Manual), section 124.3, incorporated by reference, 39 CFR 111.1 (1974), insofar as such regulations relate to the packaging of radioactive material, marking and labeling of the packages, loading and storage of packages, placarding of the transportation vehicle, monitoring requirements and accident reporting.

C.7.2 **Exemptions.**

(a) Common and contract carriers, freight forwarders, and warehousemen who are subject to the rules and regulations of the U.S. Department of Transportation or the U.S. Postal Service, as defined in Paragraph C.7.1(b), are exempt from these regulations to the extent that they transport or store radioactive material in the regular course of their carriage for another or storage incident thereto. Common and contract carriers who are not subject to the rules and regulations of the U. S. Department of Transportation or U.S. Postal Service are subject to C.7.1 and other applicable sections of these regulations.

(b) Any licensee is exempt from C.7.1 to the extent that he delivers to a carrier for transport packages each of which contains no radioactive material having a specific activity in excess of 0.002 microcurie (74 Bq) per gram.

(c) Any licensee who delivers radioactive material to a carrier for transport, where such transport is subject to the regulations of the U.S. Postal Service, is exempt from the provisions of C.7.1.

C.7.3 **Interstate Transport.**

(a) A general license is hereby issued to any common or contract carrier to receive, possess, transport, and store radioactive material in the regular course of their carriage for another or storage incident thereto, provided the transportation and storage is in accordance with the applicable requirements of the regulations, appropriate to the mode of transport, of the U.S. Department of Transportation insofar as such regulations relate to the loading and storage of packages, placarding of the transporting vehicle, and incident reporting.[16]

(b) A general license is hereby issued to any private carrier to transport radioactive material, provided the transportation is in accordance with the applicable requirements of the regulations, appropriate to the mode of transport, of the U.S. Department of Transportation insofar as such regulations relate to the loading and storage of packages, placarding of the transporting vehicle, and incident reporting.[16]

(c) Persons who transport radioactive material pursuant to the general licenses in C.7.3(a) or (b) are exempt from the requirements of Part A of these regulations to the extent that they transport radioactive material.

C.7.4 **Preparation of Radioactive Material for Transportation.** A general license is hereby issued to

---

[16] A. . . . . A. . . . . .

deliver radioactive material to a carrier[17] for transport provided that:

[17] F. . . . .

C.7.4(a)

(a) The licensee complies with the applicable requirements of the regulations, appropriate to the mode of transport, of the U.S. Department of Transportation insofar as such regulations relate to the packaging of radioactive material, and to the monitoring, marking and labeling of those packages.

(b) The licensee has established procedure for safely opening and closing packages in which radioactive material is transported and to assure that, prior to the delivery to a carrier for transport, each package is properly closed for transport.

(c) Prior to delivery of a package to a carrier for transport, the licensee shall assure that any special instructions needed to safely open the package are sent to or have been made available to the consignee.

C.7.5 **Advance Notification of Transport of Nuclear Waste.**

(a) Prior to the transport of any nuclear waste outside of the confines of the licensee's facility or other place of use or storage, or prior to the delivery of any nuclear waste to a carrier for transport, each licensee shall provide advance notification of such transport to the governor, or governor's designee,[18] of each State through which the waste will be transported. Advance notification is required only when:

(1) the licensed material is required by 10 CFR 71 to be in Type B packaging for transportation;

(2) the licensed material other than irradiated fuel is being transported to, through or across state boundaries to a disposal site or to a collection point for transport to a disposal site;

(3) the quantity of licensed material in a single package exceeds:

(i) 5000 curies of special form radionuclides;

(ii) 5000 curies of uncompressed gases of Ar-41, Kr-85m, Kr-87, Xe-133m, or Xe-135;

(iii) 50,000 curies of Ar-37, or of uncompressed gases of Kr-85 or Xe-133, or of H-3 as a gas, as luminous paint, or adsorbed on solid material;

(iv) 20 curies of other non-special form radionuclides for which A2 is less than or equal to four curies; or

(v) 200 curies of other non-special form radionuclides for which A2 is greater than four curies.

(b) Each advance notification required by C.7.5(a) shall contain the following information:

(1) the name, address, and telephone number of the shipper, carrier, and receiver of the shipment;

(2) a description of the nuclear waste contained in the shipment as required by the regulations of the U.S. Department of Transportation, 49 CFR 172.202 and 172.203(d);

(3) the point of origin of the shipment and the 7-day period during which departure of the shipment is estimated to occur;

(4) the 7-day period during which arrival of the shipment at State boundaries is estimated to occur;

[illegible]

(5) the destination of the shipment, and the 7-day period during which arrival of the shipment is estimated to occur; and

(6) a point of contact with a telephone number for current shipment information.

C.7.6(c)

(c) The notification required by C.7.5(a) shall be made in writing to the office of each appropriate governor or governor's designee and to the Agency. A notification delivered by mail must be postmarked at least 7 days before the beginning of the 7-day period during which departure of the shipment is estimated to occur. A notification delivered by messenger must reach the office of the governor, or governor's designee, at least 4 days before the beginning of the 7-day period during which departure of the shipment is estimated to occur. A copy of the notification shall be retained by the licensee for 1 year.

(d) The licensee shall notify each appropriate governor, or governor's designee, and the Agency of any changes to schedule information provided pursuant to C.7.5(a). Such notification shall be by telephone to a responsible individual in the office of the governor, or governor's designee, of the appropriate State or States. The licensee shall maintain for 1 year a record of the name of the individual contacted.

(e) Each licensee who cancels a nuclear waste shipment, for which advance notification has been sent, shall send a cancellation notice to the governor, or governor's designee, of each appropriate State and to the Agency. A copy of the notice shall be retained by the licensee for 1 year.

C.8 USE OF RADIONUCLIDES IN THE HEALING ARTS

C.8.1 **Scope, Provisions for Research Involving Human Subjects and FDA, Other Federal and State Requirements.**

(a) **Scope.** These requirements and provisions provide for the protection of the public health and safety. The requirements and provisions of this subpart are in addition to, and not in substitution for, others in these regulations. The requirements and provisions of these regulations apply to applicants and licensees subject to this subpart unless specifically exempted.

(b) **Provisions for Research Involving Human Subjects.** A licensee may conduct research involving human subjects using radioactive material provided that the research is conducted, funded, supported, or regulated by a Federal Agency which has implemented the Federal Policy for the Protection of Human Subjects. Otherwise, a licensee shall apply for and receive approval of a specific amendment to its Agency license before conducting such research. Both types of licensees shall, at a minimum, obtain informed consent from the human subjects and obtain prior review and approval of the research activities by an "Institutional Review Board" in accordance with the meaning of these terms as defined and described in the Federal Policy for the Protection of Human Subjects.

(c) **FDA, Other Federal and State Requirements.** Nothing in this Subpart relieves the licensee from complying with applicable FDA, other federal, and State requirements governing radioactive drugs or devices.

(d) **License Required.** A person shall not manufacture, produce, acquire, receive, possess, use or transfer radioactive material for medical use except in accordance with a specific license issued by the Agency, the U.S. Nuclear Regulatory Commission, an Agreement State or Licensing State, or as allowed by Paragraphs C.8.8(a) and C.8.8(d) of these regulations.

C.8.2 **License Amendments.** A licensee shall apply for and receive a license amendment:

(a) Before it receives or uses radioactive material for a clinical procedure permitted by this Subpart but not permitted by the license issued pursuant to this Subpart;

(b) Before permitting anyone, except a visiting authorized user described in Section C.8.9, to work as an authorized user or authorized nuclear pharmacist under the license;

(c) Before changing a Radiation Safety Officer or Radiotherapy Physicist;

(d) Before ordering radioactive material in excess of the amount, or radionuclide or form

different than authorized on the license;

C.8.2(e)

(e) Before adding to or changing the areas of use or address or addresses of use identified in the application or on the license; and

(f) Before changing statements, representations, and procedures which are incorporated into the license, except as provided for in Section C.8.75 of these regulations.

C.8.3 **Notifications.** A licensee shall notify the Agency by letter no later than 30 days after:

(a) An authorized user, an authorized nuclear pharmacist, Radiation Safety Officer, or Radiotherapy Physicist permanently discontinues performance of duties under the license or has a name change; or

(b) The licensee's mailing address changes.

C.8.4 **ALARA Program.**

(a) Each licensee shall develop and implement a written program to maintain radiation doses and releases of radioactive material in effluents to unrestricted areas as low as reasonably achievable in accordance with Paragraph A.2.2(b) of these regulations.

(b) To satisfy the requirement of Paragraph C.8.4(a):

(1) The management, Radiation Safety Officer, and all authorized users shall participate in the establishment, implementation, and operation of the program as required by these regulations or the Radiation Safety Committee; or

(2) For licensees that are not medical institutions, management and all authorized users shall participate in the program as required by the Radiation Safety Officer.

(c) The ALARA program shall include an annual review by the Radiation Safety Committee for licensees that are medical institutions, or management and the Radiation Safety Officer for licensees that are not medical institutions, of summaries of the types and amounts of radioactive material used, occupational dose reports, and continuing education and training for all personnel who work with or in the vicinity of radioactive material. The purpose of the review is to ensure that individuals make every reasonable effort to maintain occupational doses, doses to the general public, and releases of radioactive material as low as reasonably achievable, taking into account the state of technology, and the cost of improvements in relation to benefits.

(d) The licensee shall retain a current written description of the ALARA program for the duration of the license. The written description shall include:

(1) A commitment by management to keep occupational doses as low as reasonably achievable;

(2) A requirement that the Radiation Safety Officer brief management once each year on the radiation safety program;

(3) Personnel exposure investigational levels that, when exceeded, will initiate an investigation by the Radiation Safety Officer of the cause of the exposure; and

(4) Personnel exposure investigational levels that, when exceeded, will initiate a prompt investigation by the Radiation Safety Officer of the cause of the exposure and a consideration of actions that might be taken to reduce the probability of recurrence.

C.8.5 **Radiation Safety Officer.**

(a) A licensee shall appoint a Radiation Safety Officer responsible for implementing the radiation safety program. The licensee, through the Radiation Safety Officer, shall ensure that radiation safety activities are being performed in accordance with approved procedures and

regulatory requirements in the daily operation of the licensee's radioactive material program.

(b) The Radiation Safety Officer shall:

YYYY

(1) Investigate overexposures, accidents, spills, losses, thefts, unauthorized receipts, uses, transfers, and disposals, and other deviations from approved radiation safety practice and implement corrective actions as necessary;

(2) Implement written policy and procedures for:

(i) Authorizing the purchase of radioactive material;

(ii) Receiving and opening packages of radioactive material;

(iii) Storing radioactive material;

(iv) Keeping an inventory record of radioactive material;

(v) Using radioactive material safely;

(vi) Taking emergency action if control of radioactive material is lost;

(vii) Performing periodic radiation surveys;

(viii) Performing checks and calibrations of survey instruments and other safety equipment;

(ix) Disposing of radioactive material;

(x) Training personnel who work in or frequent areas where radioactive material is used or stored; and

(xi) Keeping a copy of all records and reports required by the Agency regulations, a copy of these regulations, a copy of each licensing request and license and amendments, and the written policy and procedures required by the regulations; and

(3) For medical use not sited at a medical institution, approve or disapprove radiation safety program changes with the advice and consent of management prior to submittal to the Agency for licensing action; or

(4) For medical use sited at a medical institution, assist the Radiation Safety Committee in the performance of its duties.

C.8.6 **Radiation Safety Committee.** Each medical institution licensee shall establish a Radiation Safety Committee to oversee the use of radioactive material.

(a) The Committee shall meet the following administrative requirements:

(1) Membership must consist of at least 3 individuals and shall include an authorized user of each type of use permitted by the license, the Radiation Safety Officer, a representative of the nursing service, and a representative of management who is neither an authorized user nor the Radiation Safety Officer. Other members may be included as the licensee deems appropriate.

(2) The Committee shall meet at least once each calendar quarter.

(3) To establish a quorum and to conduct business, one-half of the Committee's membership shall be present, including the Radiation Safety Officer and the management's representative or designee.

(4) The minutes of each Radiation Safety Committee meeting shall include:

(i) The date of the meeting;

(ii) Members present;

(iii) Members absent;

(iv) Summary of deliberations and discussions;

(v) Recommended actions and the numerical results of all ballots; and

(vi) Document any reviews required in Paragraphs C.8.4(b) and C.8.6(b).

(5) The Committee shall provide each member with a copy of the meeting minutes, and retain one copy until the Agency authorizes its disposition.

(b) To oversee the use of licensed material, the Committee shall:

(1) Be responsible for monitoring the institutional program to maintain occupational doses as low as reasonably achievable;

(2) Review, on the basis of safety and with regard to the training and experience standards of this subpart, and approve or disapprove any individual who is to be listed as an authorized user, an authorized nuclear pharmacist, the Radiation Safety Officer, or Radiotherapy Physicist before submitting a license application or request for amendment or renewal;

(3) Review on the basis of safety and approve or disapprove each proposed method of use of radioactive material;

(4) Review on the basis of safety, and approve with the advice and consent of the Radiation Safety Officer and the management representative, or disapprove procedures and radiation safety program changes prior to submittal to the Agency for licensing action;

(5) Review quarterly, with the assistance of the Radiation Safety Officer, occupational radiation exposure records of all personnel working with radioactive material;

(6) Review quarterly, with the assistance of the Radiation Safety Officer, all incidents involving radioactive material with respect to cause and subsequent actions taken;

(7) Review annually, with the assistance of the Radiation Safety Officer, the radiation safety program; and

(8) Establish a table of investigational levels for occupational dose that, when exceeded, will initiate investigations and considerations of action by the Radiation Safety Officer.

C.8.7 **Statement of Authorities and Responsibilities.**

(a) A licensee shall provide sufficient authority and organizational freedom to the Radiation Safety Officer and the Radiation Safety Committee to:

(1) Identify radiation safety problems;

(2) Initiate, recommend, or provide solutions; and

(3) Verify implementation of corrective actions.

(b) A licensee shall establish in writing the authorities, duties, responsibilities, and radiation safety activities of the Radiation Safety Officer and the Radiation Safety Committee.

C.8.8 **Supervision.**

(a) Unless prohibited by license condition, an individual may receive, possess, use, or transfer radioactive material in accordance with the regulations in this subpart under the

supervision of an authorized user as provided below. A licensee that supervises an individual is responsible for the acts and omissions of the supervised individual.

C.8.8(b)

(b) A licensee that permits the receipt, possession, use, or transfer of radioactive material by an individual under the supervision of an authorized user as allowed by this subpart shall:

(1) Instruct the supervised individual in the principles of radiation safety appropriate to that individual's use of radioactive material and in the licensee's written quality management plan; and

(2) Periodically review the supervised individual's use of radioactive material and the records kept to reflect this use; and

(3) If the individual is involved in administration of radiation/radioactive materials to humans, ensure that the individual possesses a current license in accordance with the Rules and Regulations for the Licensure of Radiographers, Nuclear Medicine Technologists and Radiation Therapists [R5-68-RAD] of the Rhode Island Department of Health, unless the individual is specifically exempted from licensure by Section 6.0 of said regulations;

(c) A licensee shall require the supervised individual receiving, possessing, using or transferring radioactive material under this subpart to:

(1) Follow the instructions of the supervising authorized user;

(2) Follow the written radiation safety and quality management procedures established by the licensee; and

(3) Comply with these regulations and the license conditions with respect to the use of radioactive material.

(d) An individual may prepare unsealed radioactive material for medical use in accordance with this Subpart under the supervision of an authorized nuclear pharmacist or physician who is an authorized user, unless prohibited by license condition. A licensee that permits the preparation of radioactive material for medical use by an individual under the supervision of an authorized nuclear pharmacist or physician who is an authorized user shall:

(1) Instruct the supervised individual in the preparation of radioactive material for medical use and the principles and procedures for radiation safety and in the licensee's written quality management program, as appropriate to that individual's use of radioactive material;

(2) Require the supervised individual to follow the instructions given pursuant to Subparagraph (b)(1) of this Section and to comply with the regulations of this Subpart and license conditions; and

(3) Require the supervising authorized nuclear pharmacist or physician who is an authorized user to periodically review the work of the supervised individual as it pertains to preparing radioactive material for medical use and the records kept to reflect that work.

C.8.9 **<u>Visiting Authorized User</u>.**

(a) A licensee may permit any visiting authorized user to use licensed material for medical use under the terms of the licensee's license for 60 days each year if:

(1) The visiting authorized user has the prior written permission of the licensee's management and, if the use occurs on behalf of an institution, the institution's Radiation Safety Committee;

(2) The licensee has a copy of an Agency, Agreement State, Licensing State or U.S. Nuclear Regulatory Commission license that identifies the visiting authorized user by name as an authorized user for medical use; and

(3) Only those procedures for which the visiting authorized user is specifically authorized by an Agency, Agreement State, Licensing State or U.S. Nuclear Regulatory

Commission license are performed by that individual.

(b) A licensee need not apply for a license amendment in order to permit a visiting authorized user to use licensed material as described in Paragraph C.8.9(a).
C.8.9(c)

(c) A licensee shall retain copies of the records specified in Paragraph C.8.9(a) for 5 years from the date of the last visit.

C.8.10 **Mobile Nuclear Medicine Service Administrative Requirements.**

(a) The Agency will only license mobile nuclear medicine services in accordance with this subpart and other applicable requirements of these regulations to serve clients who do not have an Agency license for the materials listed in those parts.

(b) Mobile nuclear medicine service licensees shall obtain a letter signed by the management of each location where services are rendered that authorizes use of radioactive material. The mobile nuclear medicine service shall retain the letter for three years after the last provision of service.

(c) If a mobile nuclear medicine service provides services that the client is also authorized to provide, the client is responsible for assuring that services are conducted in accordance with these regulations while the mobile nuclear service is under the client's direction.

(d) A mobile nuclear medicine service shall not have radioactive material delivered directly from the manufacturer or the distributor to the client's address of use.

C.8.11 **Quality Management Program.**

(a) In addition to the definitions in Subpart A.0 of these regulations, the following definitions are applicable to a quality management program:

(1) Diagnostic clinical procedures manual means a collection of written procedures that describes each method (and other instructions and precautions) by which the licensee performs diagnostic clinical procedures; where each diagnostic clinical procedure has been approved by the authorized user and includes the radiopharmaceutical, dosage, and route of administration;

(2) Misadministration means administration of:

(i) A therapeutic radiopharmaceutical dosage, other than sodium iodide I-125 or I-131:

(a) Involving the wrong individual, wrong radiopharmaceutical, or wrong route of administration; or

(b) When the administered dosage differs from the prescribed dosage by more than 20 percent of the prescribed dosage;

(ii) A gamma stereotactic radiosurgery radiation dose:

(a) Involving the wrong individual or wrong treatment site; or

(b) When the calculated total administered dose differs from the total prescribed dose by more than 10 percent of the total prescribed dose; or

(iii) A teletherapy radiation dose:

(a) Involving the wrong individual, wrong mode of treatment, or wrong treatment site; or

(b) When the treatment consists of three (3) or fewer fractions and the calculated total administered dose differs from the total prescribed dose by more than 10 percent of the total prescribed dose; or

(c) When the calculated weekly administered dose differs from the weekly prescribed dose by 30 percent or more of the weekly prescribed dose; or

(d) When the calculated total administered dose differs from the total prescribed dose by more than 20 percent of the total prescribed dose;

C.8.11(a)(2)(iv)

(iv) A brachytherapy radiation dose:

(a) Involving the wrong individual, wrong radionuclide, or wrong treatment site (excluding, for permanent implants, seeds that were implanted in the correct site but migrated outside the treatment site); or

(b) Involving a sealed source that is leaking; or

(c) When, for a temporary implant, one or more sealed sources are not removed upon completion of the procedure; or

(d) When the calculated administered dose to the treatment site differs from the prescribed dose by more than 20 percent of the prescribed dose;

(v) A diagnostic radiopharmaceutical dosage, other than quantities greater than 1.11 mega- becquerels (30 µCi) of either sodium iodide I-125 or I-131, both:

(a) Involving the wrong individual, wrong radiopharmaceutical, wrong route of administration, or when the administered dosage differs from the pre-scribed dosage; and

(b) When the dose to the individual exceeds 50 millisieverts (5 rem) effective dose equivalent or 500 millisieverts (50 rem) dose equivalent to any individual organ.

(vi) A radiopharmaceutical dosage greater than 1.11 megabecquerels (30 µCi) of either sodium iodide I-125 or I-131:

(a) Involving the wrong individual or wrong radiopharmaceutical; or

(b) When both the administered dosage differs from the prescribed dosage by more than 20 percent of the prescribed dosage and the difference between the administered dosage and prescribed dosage exceeds 1.11 megabecquerels (30 µCi).

(3) Prescribed dosage means the quantity of radiopharmaceutical activity as documented:

(i) In a written directive; or

(ii) Either in the diagnostic clinical procedures manual or in any appropriate record in accordance with the directions of the authorized user for diagnostic procedures.

(4) Prescribed dose means:

(i) For gamma stereotactic radiosurgery, the total dose as documented in the written directive; or

(ii) For teletherapy, the total dose and dose per fraction as documented in the written directive; or

(iii) For brachytherapy, either the total source strength and exposure time, or the total dose as documented in the written directive.

(5) Recordable event means the administration of:

(i) A radiopharmaceutical or radiation without a written directive where a written

directive is required;

(ii) A radiopharmaceutical or radiation where a written directive is required without daily recording of each administered radiopharmaceutical dosage or radiation dose in the appropriate record;

(iii) A radiopharmaceutical dosage greater than 1.11 megabecquerels (30 µCi) of sodium iodide I-125 or I-131 when both the administered dosage differs from the prescribed dosage by more than 10 percent of the prescribed dosage, and the difference between the administered dosage and the prescribed dosage exceeds 555 kilobecquerels (15 µCi);

(iv) A therapeutic radiopharmaceutical dosage, other than sodium iodide I-125 or I-131, when the administered dosage differs from the prescribed dosage by more than 10 percent of the prescribed dosage;

(v) A teletherapy radiation dose when the calculated weekly administered dose exceeds the weekly prescribed dose by 15 percent or more of the weekly prescribed dose;

(vi) A brachytherapy radiation dose when the calculated administered dose differs from the prescribed dose by more than 10 percent of the prescribed dose.

(6) Written directive means an order in writing for a specific patient or human research subject, dated and signed by an authorized user prior to the administration of a radiopharmaceutical or radiation, except as specified in subitem (vi) below, containing the following information:

(i) For any administration of quantities greater than 1.11 megabecquerels (30 µCi) of sodium iodide I-125 or I-131: the radionuclide and dosage; or

(ii) For a therapeutic administration of a radiopharmaceutical other than sodium iodide I-125 or I-131: the radiopharmaceutical, dosage, and route of administration; or

(iii) For gamma stereotactic radiosurgery: target coordinates, collimator size, plug pattern, and total dose; or

(iv) For teletherapy: the total dose, dose per fraction, treatment site, and overall treatment period; or

(v) For high-dose-rate remote afterloading brachytherapy: the radionuclide, treatment site, and total dose; or

(vi) For all other brachytherapy:

(a) Prior to implantation: the radionuclide, number of sources, and source strengths; and

(b) After implantation but prior to completion of the procedure: the radionuclide, treatment site, and total source strength and exposure time (or, equivalently, the total dose).

(b) **Scope and Applicability.**

(1) Each application for a license under Subpart C.8 (except for licenses solely requesting the use of sealed sources for diagnosis) shall include a quality management program that specifies staff, duties and responsibilities, and equipment and procedures as part of the application required by these regulations. The licensee shall implement the program upon issuance of a license by the Agency;

(2) Each existing licensee subject to Subpart C.8 (except for licenses solely authorizing the use of sealed sources for diagnosis) shall, within 180 days of 20 June 1995, submit a copy of their quality management program to the Agency, along with a written certification that this program has been implemented.

(3) Each applicant or licensee under Subpart C.8 (except for licenses solely authorizing/requesting the use of sealed sources for diagnosis) shall establish and maintain a written quality management program to provide high confidence that radioactive material

or radiation from radioactive material will be administered to humans as directed by the authorized user. The quality management program shall include written policies and procedures to meet the following specific objectives, that:

(i) Prior to each administration, a written directive[19] is prepared for any:

(a) Teletherapy radiation dose;

(b) Gamma stereotactic radiosurgery dose;

(c) Brachytherapy radiation dose;

(d) Administration of quantities greater than 1.11 megabecquerels (30 µCi) of sodium iodide I-131; or

(e) Therapeutic administration of a radiopharmaceutical other than sodium iodide I-131.

(ii) Prior to each administration of radiation or radioactive material, the patient's or human research subject's identity is verified by more than one method as the individual named in the written directive;

(iii) Final plans of treatment and related calculations for brachytherapy, teletherapy, and gamma stereotactic radiosurgery are in accordance with the respective written directives;

(iv) Each administration of radiation or radioactive material is in accordance with the written directive or the diagnostic clinical procedures manual;

(v) Any unintended deviation from the written directive or diagnostic clinical procedures manual is identified and evaluated, and appropriate action is taken; and

(vi) A quality management program review is conducted, as required by C.8.11(c)(3).

(c) **Implementation of Quality Management Program.** Each licensee shall:

(1) Evaluate and respond to misadministrations in accordance with Paragraph C.8.11(d).

(2) Evaluate and respond to recordable events within 30 days after discovery by assembling the relevant facts, identifying the cause of the recordable event, and taking appropriate action, if any is required, to prevent recurrence.

(3) Verify compliance with all aspects of the quality management program by conducting, at intervals no greater than 12 months, a review of the program including, since the last review, an evaluation of:

(i) All recordable events;

(ii) All misadministrations;

(iii) A representative sample of patient and human research subject administrations;

(iv) Any recommendations for changes to be made, as well as any modifications since the last evaluation; and

---

[19] A [illegible]

(v) If required, revise procedures to assure that radioactive material and radiation therefrom is administered as directed by the authorized user.

(4) Any modifications made to the program shall not decrease the effectiveness of the program.

(5) Retain, in an auditable form, for 3 years:

(i) Each written directive;

(ii) A record of each administered radiation dose or radiopharmaceutical dosage where a written directive is required;

(iii) A record of each annual review of the program including the evaluations and findings of the review; and

(iv) A record of each recordable event, the relevant facts, and any corrective actions taken.

(d) **Records and Reports of Misadministrations.** The licensee shall take the following actions in response to a misadministration:

(1) Notify the Agency by telephone[20] no later than the next calendar day after discovery of the misadministration;

(2) Submit a written report to the Agency within 15 days after discovery of the misadministration. The written report shall include: the licensee's name; the prescribing physician's name; a brief description of the event; why the event occurred; the effect on the individual who received the misadministration; what improvements are needed to prevent recurrence; actions taken to prevent recurrence; whether the licensee notified the individual or the individual's responsible relative or guardian, and if not, why not, and if there was notification, what information was provided. The report shall not include the individual's name or other information that could lead to identification of the individual. To meet the requirements of this Section, the notification of the individual receiving the misadministration may be made instead to that individual's responsible relative or guardian, when appropriate.

(3) Notify the individual who received the misadministration and their referring physician, if applicable, of the misadministration no later than 24 hours after its discovery, unless the referring physician personally informs the licensee either that he/she will inform the individual or that, based on medical judgment, telling the individual would be harmful. The licensee is not required to notify the individual without first consulting the referring physician. If the referring physician or individual who received the misadministration cannot be reached within 24 hours, the licensee shall notify the individual as soon as possible thereafter. The licensee shall not delay any appropriate medical care for the individual, including any necessary remedial care as a result of the misadministration, because of any delay in notification;

(4) If the individual was notified, furnish, within 15 days after discovery of the misadministration, a written report to the individual by sending either a copy of the report that was submitted to the Agency, or a brief description of both the event and the consequences as they may effect the individual, provided a statement is included that the report submitted to the Agency can be obtained from the licensee;

(5) Retain a record of each misadministration for 5 years. The record shall contain the names of all individuals involved (including the prescribing physician, allied health personnel, the individual who received the misadministration, and the individual's referring physician, if applicable), the individual's social security number or identification number if one has been assigned, a brief description of the misadministration, why it occurred, the effect on the

---

[illegible]

individual, what improvements are needed to prevent recurrence, and the actions taken to prevent recurrence; and

(6) Aside from the notification requirement, nothing in Paragraph C.8.11(d) affects any rights or duties of licensees and physicians in relation to each other, individuals receiving misadministrations, or that individual's responsible relatives or guardians.

C.8.12 **Suppliers.** A licensee shall use for medical use only:

(a) Sealed sources or devices manufactured, labeled, packaged, and distributed in accordance with a license issued pursuant to Paragraph C.5.5(l) of these regulations or the equivalent regulations of another Agreement State, a Licensing State or the U.S. Nuclear Regulatory Commission; and

(b) Teletherapy sources or devices manufactured and distributed in accordance with a license issued pursuant to Paragraph C.5.5(l) of these regulations or the equivalent regulations of another Agreement State, a Licensing State or the U.S. Nuclear Regulatory Commission.

C.8.13 **Quality Control of Imaging Equipment.** Each Licensee shall establish an imaging equipment quality assurance program.

C.8.14 **Possession, Use, Calibration, and Check of Dose Calibrators (Photon-Emitting Radionuclides) and Instruments to Measure Dosages (Alpha- and Beta- Emitting Radionuclides).**

(a) **Possession and Use.**

(1) A licensee shall possess a dose calibrator and use it to measure the activity of dosages of photon-emitting radionuclides prior to administration to each patient or human research subject.

(2) For other than unit dosages of alpha- and beta- emitting radionuclides that are obtained from a manufacturer or preparer licensed pursuant to Paragraph C.5.5(j) of these regulations or the equivalent regulations of another Agreement State, a Licensing State or the U.S. Nuclear Regulatory Commission, a licensee shall possess and use instrumentation to measure the radioactivity of alpha- or beta- emitting radionuclides. The licensee shall have procedures for use of the instrumentation.

(b) A licensee shall:

(1) Check each dose calibrator for constancy with a dedicated check source at the beginning of each day of use. To satisfy the requirement of this section, the check shall be done on a frequently used setting with a sealed source of not less than 10 microcuries (370 kBq) of radium-226 or 50 microcuries (1.85 MBq) of any other photon-emitting radionuclide with a half-life greater than 90 days;

(2) Test each dose calibrator for accuracy upon installation and at intervals not to exceed 12 months thereafter by assaying a reference source of the most frequently used radionuclide. This radionuclide source must be either a primary standard obtained from the National Institute for Standards and Technology or a calibration source that has been specifically prepared for dose calibrator accuracy determination by the radionuclide manufacturer/distributor. The actual activity of any such calibration source must be within 5 percent of its stated activity and must have been assayed by the radionuclide manufacturer/distributor in a dose calibrator whose calibration for that radionuclide is traceable to the National Institute for Standards and Technology within the previous six months. Upon completion of the dose calibrator accuracy determination, the licensee shall also perform the constancy determination described in Subparagraph C.8.14(b)(1) and use the values obtained as the reference points for the daily constancy checks.

(3) Test each dose calibrator for linearity upon installation and at intervals not to exceed 3 months thereafter over the range of use between 1.11 megabecquerels (30 µCi) and the highest dosage that will be administered to a patient or human research subject; and

(4) Test each dose calibrator for geometry dependence upon installation over the range of volumes and volume configurations for which it will be used. The licensee shall keep a record of this test for the duration of the use of the dose calibrator.

YYYY

(5) Perform tests before initial use, periodically, and following repair on each instrument used to measure dosages of alpha- and beta- emitting radionuclides for accuracy, linearity, geometric dependence, as appropriate;

(6) Check each instrument used to measure dosages of alpha- and beta- emitting radionuclides for constancy and proper operation at the beginning of each day of use; and

(7) Make adjustment, when necessary, to each instrument used to measure dosages of alpha- and beta- emitting radionuclides.

(c) A licensee shall mathematically correct dosage readings for any geometry or linearity error that exceeds 10 percent if the dosage is greater than 10 microcuries (370 kBq) and shall repair or replace the dose calibrator if the accuracy or constancy error exceeds 10 percent.

(d) A licensee shall also perform checks and tests required by Paragraph C.8.14(b) following adjustment or repair of the dose calibrator.

(e) A licensee shall retain a record of each check and test required by Section C.8.14 for 3 years. The records required by Paragraph C.8.14(b) shall include:

(1) For Subparagraph C.8.14(b)(1), the model and serial number of the dose calibrator, the identity and calibrated activity of the radionuclide contained in the check source, the date of the check, the activity measured, the instrument settings, and the initials of the individual who performed the check;

(2) For Subparagraph C.8.14(b)(2), the model and serial number of the dose calibrator, the model and serial number of each source used and the identity of the radionuclide contained in the source and its activity, the date of the test, the results of the test and the signature of the individual performing the test;

(3) For Subparagraph C.8.14(b)(3), the model and serial number of the dose calibrator, the calculated activities, the measured activities, the date of the test, and the signature of the individual performing the test; and

(4) For Subparagraph C.8.14(b)(4), the model and serial number of the dose calibrator, the configuration and calibrated activity of the source measured, the activity of the source, the activity measured and the instrument setting for each volume measured, the date of the test, and the signature of the individual performing the test.

C.8.15 **Calibration and Check of Survey Instruments.**

(a) A licensee shall ensure that the survey instruments used to show compliance with this subpart have been calibrated before first use, annually, and following repair.

(b) To satisfy the requirements of Paragraph C.8.15(a), the licensee shall:

(1) Calibrate all required scale readings up to 1000 millirems (10 mSv) per hour with a radiation source;

(2) Calibrate at least two points on each scale to be calibrated. These points should be at approximately 1/3 and 2/3 of scale rating; and

(3) Conspicuously note on the instrument the apparent dose rate from a dedicated check source as determined at the time of calibration, and the date of calibration.

(c) To satisfy the requirements of Paragraph C.8.15(b), the licensee shall:

(1) Consider a point as calibrated if the indicated dose rate differs from the calculated dose rate by not more than 10 percent; and

(2) Consider a point as calibrated if the indicated dose rate differs from the calculated

dose rate by not more than 20 percent if a correction chart or graph is conspicuously attached to the instrument.

YYYYY

(d) A licensee shall check each survey instrument for proper operation with the dedicated check source each day of use. The licensee is not required to keep records of these checks.

(e) The licensee shall retain a record of each calibration required in Paragraph C.8.15(a) for 3 years. The record shall include:

(1) A description of the calibration procedure; and

(2) A description of the source used and the certified dose rates from the source, and the rates indicated by the instrument being calibrated, the correction factors deduced from the calibration data, the signature of the individual who performed the calibration, and the date of calibration.

(f) To meet the requirements of Paragraphs C.8.15(a), (b), and (c), the licensee may obtain the services of individuals licensed by the Agency, the U.S. Nuclear Regulatory Commission, an Agreement State, or a Licensing State to perform calibrations of survey instruments. Records of calibrations which contain information required by Paragraph C.8.15(e) shall be maintained by the licensee.

C.8.16 **Measurement of Dosages of Unsealed Radioactive Materials for Medical Use.** A licensee shall:

(a) Measure the activity of each dosage of a photon-emitting radionuclide before medical use;

(b) Measure, by direct measurement or by combination of measurements and calculations, the activity of each dosage of an alpha- or beta- emitting radionuclide prior to medical use, except for unit dosages obtained from a manufacturer or preparer licensed pursuant to Paragraph C.5.5(j) of these regulations or the equivalent regulations of another Agreement State, a Licensing State or the U.S. Nuclear Regulatory Commission;

(c) Retain a record of the assays required by Paragraphs C.8.16(a) and (b) for 3 years. To satisfy this requirement, the record shall contain the:

(1) Generic name, trade name, or abbreviation of the radiopharmaceutical, its lot number, and expiration dates and the radionuclide;

(2) Patient's or human research subject's name, and identification number if one has been assigned;

(3) Prescribed dosage and activity of the dosage at the time of assay, or a notation that the total activity is less than 30 microcuries (1.1 MBq);

(4) Date and time of the assay and administration; and

(5) Initials of the individual who performed the assay.

C.8.17 **Authorization for Calibration and Reference Sources.** Any person authorized by this subpart for medical use of radioactive material may receive, possess, and use the following radioactive material for check, calibration and reference use:

(a) Sealed sources manufactured and distributed by persons specifically licensed pursuant to Part C of these regulations or equivalent provisions of the U.S. Nuclear Regulatory Commission, Agreement State or Licensing State and that do not exceed 15 millicuries (555 MBq) each;

(b) Any radioactive material listed in Sections C.8.28 or C.8.30 with a half-life of 100 days or less in individual amounts not to exceed 15 millicuries (555 MBq);

(c) Any radioactive material listed in Sections C.8.28 or C.8.30 with a half life greater than 100 days in individual amounts not to exceed 200 microcuries (7.4 MBq) each; and

(d) Technetium-99m in individual amounts not to exceed 50 millicuries (1.85 GBq).

YYYYY

C.8.18 **Requirements for Possession of Sealed Sources and Brachytherapy Sources.**

(a) A licensee in possession of any sealed source or brachytherapy source shall follow the radiation safety and handling instructions supplied by the manufacturer or equivalent instructions approved by the Agency and shall maintain the instructions for the duration of source use in a legible form convenient to users.

(b) A licensee in possession of a sealed source shall assure that:

(1) The source is tested for leakage before its first use unless the licensee has a certificate from the supplier indicating that the source was tested within 6 months before transfer to the licensee; and

(2) The source is tested for leakage at intervals not to exceed 6 months or at intervals approved by the Agency, another Agreement State, a Licensing State or the U.S. Nuclear Regulatory Commission.

(c) To satisfy the leak test requirements of Paragraph C.8.18(b), the licensee shall assure that:

(1) Leak tests are capable of detecting the presence of 0.005 microcurie (185 Bq) of radioactive material on the test sample, or in the case of radium, the escape of radon at the rate of 0.001 microcurie (37 Bq) per 24 hours;

(2) Test samples are taken from the source or from the surfaces of the device in which the source is mounted or stored on which radioactive contamination might be expected to accumulate; and

(3) Test samples are taken when the source contained in a device is in the "off" position.

(d) A licensee shall retain leak test records for 5 years. The records shall contain the model number, and serial number, if assigned, of each source tested, the identity of each source radionuclide and its estimated activity, the measured activity of each test sample expressed in microcuries (becquerels), a description of the method used to measure each test sample, the date of the test, and the signature of the Radiation Safety Officer.

(e) If the leak test reveals the presence of 0.005 microcurie (185 Bq) or more of removable contamination, the licensee shall:

(1) Immediately withdraw the sealed source from use and store it in accordance with the requirements of these regulations; and

(2) File a report with the Agency within 5 days of receiving the leak test results describing the equipment involved, the test results, and the action taken.

(f) A licensee need not perform a leak test on the following sources:

(1) Sources containing only radioactive material with a half-life of less than 30 days;

(2) Sources containing only radioactive material as a gas;

(3) Sources containing 100 microcuries (3.7 MBq) or less of beta or photon-emitting material or 10 microcuries (370 kBq) or less of alpha-emitting material;

(4) Seeds of iridium-192 encased in nylon ribbon; and

(5) Sources stored and not being used. The licensee shall, however, test each such source for leakage before any use or transfer unless it has been tested for leakage within 6 months before the date of use or transfer.

(g) A licensee in possession of a sealed source or brachytherapy source shall conduct a

physical inventory of all such sources at intervals not to exceed 3 months. The licensee shall retain each inventory record for 5 years. The inventory records shall contain the model number of each source, and serial number if one has been assigned, the identity of each source radionuclide and its estimated activity, the location of each source, date of the inventory, and the signature of the Radiation Safety Officer.

C.8.18(h)

(h) A licensee in possession of a sealed source or brachytherapy source shall survey with a radiation survey instrument at intervals not to exceed 3 months all areas where such sources are stored. This does not apply to teletherapy sources in teletherapy units or sealed sources in diagnostic devices.

(i) A licensee shall retain a record of each survey required in Paragraph C.8.18(h) for 3 years. The record shall include the date of the survey, a sketch of each area that was surveyed, and the measured dose rate at several points in each area expressed in millirems (microsieverts) per hour, the model number and serial number of the survey instrument used to make the survey, and the signature of the Radiation Safety Officer.

C.8.19 **Syringe Shields.**

(a) A licensee shall keep syringes that contain radioactive material to be administered in a radiation shield.

(b) A licensee shall require each individual who prepares a radiopharmaceutical kit to use a syringe radiation shield when preparing the kit and shall require each individual to use a syringe radiation shield when administering a radiopharmaceutical by injection unless the use of the shield is contraindicated for that patient or human research subject.

C.8.20 **Syringe Labels.** A licensee shall conspicuously label each syringe, or syringe radiation shield that contains a syringe with a radiopharmaceutical. The label shall show the radiopharmaceutical name or its abbreviation, the clinical procedure to be performed, or the patient's or human research subject's name.

C.8.21 **Vial Shields.** A licensee shall require each individual preparing or handling a vial that contains a radiopharmaceutical to keep the vial in a vial radiation shield.

C.8.22 **Vial Shield Labels.** A licensee shall conspicuously label each vial radiation shield that contains a vial of a radiopharmaceutical with the radiopharmaceutical name or its abbreviation.

C.8.23 **Surveys for Contamination and Ambient Radiation Dose Rate.**

(a) A licensee shall survey with a radiation detection survey instrument after the majority of radiopharmaceutical doses have been administered, but before the end of the day all areas where radiopharmaceuticals are routinely prepared for use or administered.

(b) A licensee shall survey with a radiation detection survey instrument at least once each week all areas where radiopharmaceuticals or radioactive wastes are stored.

(c) A licensee shall conduct the surveys required by Paragraphs C.8.23(a) and (b) so as to able to measure dose rates as low as 0.1 millirem (1 µSv) per hour.

(d) A licensee shall establish dose rate action levels for the surveys required by Paragraphs C.8.23(a) and (b) and shall require that the individual performing the survey immediately notify the Radiation Safety Officer if a dose rate exceeds an action level.

(e) A licensee shall survey for removable contamination once each week all areas where radiopharmaceuticals are routinely prepared for use, administered or stored.

(f) A licensee shall conduct the surveys required by Paragraph C.8.23(e) so as to be able to detect contamination on each wipe sample of 2000 disintegrations per minute (3.33 Bq).

(g) A licensee shall establish removable contamination action levels for the surveys required by Paragraph C.8.23(e) and shall require that the individual performing the survey immediately notify the Radiation Safety Officer if contamination exceeds action levels.

YYYYY

C.8.23(h)

(h) A licensee shall retain a record of each survey required by Paragraphs C.8.23(a), (b), and (e) for 3 years. The record must include the date of the survey, a sketch of each area surveyed, action levels established for each area, the measured dose rate at several points in each area expressed in millirems (microsieverts) per hour or the removable contamination in each area expressed in disintegrations per minute (becquerels) per 100 square centimeters, the serial number and the model number of the instrument used to make the survey or analyze the samples, and the initials of the individual who performed the survey.

C.8.24 **Release of Individuals Containing Radiopharmaceuticals or Permanent Implants.**

(a) A licensee may authorize the release from its control of any individual who has been administered radiopharmaceuticals or permanent implants containing radioactive material if the total effective dose equivalent to any other individual from exposure to the released individual is not likely to exceed 5 mSv (0.5 rem).[21]

(b) The licensee shall provide the released individual with instructions, including written instructions, on actions recommended to maintain doses to other individuals as low as reasonably achievable if the total effective dose equivalent to any other individual is likely to exceed 1 mSv (0.1 rem). If the dose to a breast-feeding infant or child could exceed 1 mSv (0.1 rem) assuming there were no interruption of breast-feeding, the instructions shall also include:

(1) Guidance on the interruption or discontinuation of breast-feeding; and

(2) Information on the consequences of failure to follow the guidance.

(c) The licensee shall maintain a record, for 3 years after the date of release, of the basis for authorizing the release of an individual if the total effective dose equivalent is calculated by:

(1) Using the retained activity rather than the activity administered;

(2) Using an occupancy factor less than 0.25 at 1 meter;

(3) Using the biological or effective half-life; or

(4) Considering the shielding by tissue.

(d) The licensee shall maintain a record, for 3 years after the date of release, that instructions were provided to a breast-feeding woman if the radiation dose to the infant or child could result in a total effective dose equivalent exceeding 5 mSv (0.5 rem).

C.8.25 **Mobile Nuclear Medicine Service Technical Requirements.** A licensee providing mobile nuclear medicine service shall:

(a) Transport to each address of use only syringes or vials containing prepared radiopharmaceuticals or radiopharmaceuticals that are intended for reconstitution of radiopharmaceutical kits;

(b) Bring into each location of use all radioactive material to be used and, before leaving, remove all unused radioactive material and associated radioactive waste;

(c) Secure or keep under constant surveillance and immediate control all radioactive material when in transit or at a location of use;

(d) Check survey instruments and dose calibrators as required in Paragraphs C.8.14(b)(1), C.8.14(d), C.8.14(e) and C.8.15(d), and check all other transported equipment for proper function before medical use at each location of use;

---

[21] NRC R. . . .. R. .. . . . . P. .. . . . A. . .. . R. . .. .

YYYYY

C.8.25(e)

(e) Carry a calibrated survey meter in each vehicle that is being used to transport radioactive material, and, before leaving a client location of use, survey all areas of radiopharmaceutical use with a radiation detection survey instrument to ensure that all radiopharmaceuticals and all associated radioactive waste have been removed; and

(f) Retain a record of each survey required by Paragraph C.8.25(e) for 3 years. The record must include the date of the survey, a plan of each area that was surveyed, the measured dose rate at several points in each area of use expressed in millirems (microsieverts) per hour, the model and serial number of the instrument used to make the survey, and the initials of the individual who performed the survey.

C.8.26 **Storage of Volatiles and Gases.**

(a) A licensee shall store volatile radiopharmaceuticals and radioactive gases in the shippers' radiation shield and container.

(b) A licensee shall store and use a multidose container in a properly functioning fume hood.

C.8.27 **Decay-In-Storage.**

(a) A licensee shall hold radioactive material for decay-in-storage before disposal in ordinary trash and is exempt from the requirements of Section A.4.1 of these regulations if the licensee:

(1) Holds radioactive material for decay a minimum of 10 half-lives;

(2) Monitors radioactive material at the container surface before disposal as ordinary trash and determines that its radioactivity cannot be distinguished from the background radiation level with a radiation detection survey instrument set on its most sensitive scale and with no interposed shielding;

(3) Removes or obliterates all radiation labels; and

(4) Separates and monitors each generator column individually with all radiation shielding removed to ensure that its contents have decayed to background radiation level before disposal.

(b) For radioactive material disposed in accordance with Paragraph C.8.27(a), the licensee shall retain a record of each disposal for 3 years. The record must include the date of the disposal, the date on which the radioactive material was placed in storage, the model and serial number of the survey instrument used, the background dose rate, the radiation dose rate measured at the surface of each waste container, and the name of the individual who performed the disposal.

C.8.28 **Use of Unsealed Radioactive Material for Uptake, Dilution, or Excretion Studies.**

(a) A licensee may use for uptake, dilution, or excretion studies any unsealed radioactive material prepared for medical use that is either:

(1) Obtained from a manufacturer or preparer licensed pursuant to Paragraph C.5.5(j) of these regulations or the equivalent regulations of another Agreement State, a Licensing State or the U.S. Nuclear Regulatory Commission; or

(2) Prepared by an authorized nuclear pharmacist, a physician who is an authorized user and who meets the requirements specified in Paragraph C.8.76, or an individual under the supervision of either as specified in Section C.8.8 of these regulations.

C.8.29 **Possession of Survey Instrument.** A licensee authorized to use radioactive material for uptake, dilution, and excretion studies shall possess a portable radiation detection survey instrument capable of detecting dose rates over the range 0.1 millirem (1.0 µSv) per hour to 50

millirems (500 µSv) per hour. The instrument shall be operable and calibrated in accordance with Section C.8.15.

YYYYY

C.8.30 **Use of Unsealed Radioactive Material for Imaging and Localization Studies.**

(a) A licensee may use for imaging and localization studies any unsealed radioactive material prepared for medical use that is either:

(1) Obtained from a manufacturer or preparer licensed pursuant to Paragraph C.5.5(j) of these regulations or the equivalent regulations of another Agreement State, a Licensing State or the U.S. Nuclear Regulatory Commission; or

(2) Prepared by an authorized nuclear pharmacist, a physician who is an authorized user and who meets the requirements specified in Paragraph C.8.76, or an individual under the supervision of either as specified in Section C.8.8 of these regulations.

(b) Provided the conditions of Section C.8.32 are met, a licensee shall use radioactive aerosols or gases only if specific application is made to and approved by the Agency.

(c) A licensee shall elute generators in compliance with Section C.8.31 and prepare radiopharmaceuticals from kits in accordance with the manufacturer's instructions.

(d) Technetium-99m pentetate as an aerosol for lung function studies is not subject to the restrictions in Paragraph C.8.30(b):

(e) Provided the conditions of Section C.8.32 are met, a licensee shall use radioactive aerosols or gases only if specific application is made to and approved by the Agency.

C.8.31 **Permissible Molybdenum-99 Concentration.**

(a) A licensee shall not administer to humans a radiopharmaceutical containing more than 0.15 microcurie of molybdenum-99 per millicurie of technetium-99m (0.15 kilobecquerel of molybdenum-99 per megabecquerel of technetium-99m).

(b) A licensee preparing technetium-99m radiopharmaceuticals from molybdenum-99/ technetium-99m generators shall measure the molybdenum-99 concentration in each eluate or extract.

(c) A licensee who must measure molybdenum concentration shall retain a record of each measurement for 3 years. The record shall include, for each elution or extraction of technetium-99m, the measured activity of the technetium expressed in millicuries (megabecquerels), the measured activity of molybdenum expressed in microcuries (kilobecquerels), the ratio of the measures expressed as microcuries of molybdenum per millicurie of technetium (kilobecquerels of molybdenum per megabecquerel of technetium),
the date of the test, and the initials of the individual who performed the test.

(d) A licensee shall report immediately to the Agency each occurrence of molybdenum-99 concentration exceeding the limits specified in Paragraph C.8.31(a).

C.8.32 **Control of Aerosols and Gases.**

(a) A licensee who administers radioactive aerosols or gases shall do so with a system that will keep airborne concentrations within the limits prescribed by Sections A.2.3 and A.2.11 of these regulations.

(b) The system shall either be directly vented to the atmosphere through an air exhaust or provide for collection and decay or disposal of the aerosol or gas in a shielded container.

(c) A licensee shall only administer radioactive gases in rooms that are at negative pressure compared to surrounding rooms.

(d) Before receiving, using, or storing a radioactive gas, the licensee shall calculate the amount of time needed after a release to reduce the concentration in the area of use to the

occupational limit listed in Appendix A of Part A of these regulations. The calculation shall be based on the highest activity of gas handled in a single container and the measured available air exhaust rate.

YYYYY

C.8.32(e)

(e) A licensee shall post the time calculated in Paragraph C.8.32(d) at the area of use and require that, in case of a gas spill, individuals evacuate the room until the posted time has elapsed.

(f) A licensee shall check the operation of collection systems monthly and measure the ventilation rates in areas of use at intervals not to exceed 6 months. Records of these checks and measurements shall be maintained for 3 years.

(g) A copy of the calculations required in Paragraph C.8.32(d) shall be recorded and retained for the duration of the license.

C.8.33 **Possession of Survey Instruments.** A licensee authorized to use radioactive material for imaging and localization studies shall possess a portable radiation detection survey instrument capable of detecting dose rates over the range of 0.1 millirem (1 µSv) per hour to 50 millirems (500 µSv) per hour, and a portable radiation measurement survey instrument capable of measuring dose rates over the range 1 millirem (10 µSv) per hour to 1000 millirems (10 mSv) per hour. The instruments shall be operable and calibrated in accordance with Section C.8.15.

C.8.34 **Use of Unsealed Radioactive Material for Therapy.**

(a) A licensee may use for therapeutic administration any unsealed radioactive material prepared for medical use that is either:

(1) Obtained from a manufacturer or preparer licensed pursuant to Paragraph C.5.5(j) of these regulations or the equivalent regulations of another Agreement State, a Licensing State or the U.S. Nuclear Regulatory Commission; or

(2) Prepared by an authorized nuclear pharmacist, a physician who is an authorized user and who meets the requirements specified in Paragraph C.8.76, or an individual under the supervision of either as specified in Section C.8.8 of these regulations.

C.8.35 **Safety Instruction.**

(a) A licensee shall provide oral and written radiation safety instruction for all personnel caring for patients or human research subjects undergoing radiopharmaceutical therapy and hospitalized for compliance with Section C.8.24. Refresher training shall be provided at intervals not to exceed 1 year.

(b) To satisfy Paragraph C.8.35(a), the instruction shall describe the licensee's procedures for:

(1) Patient or human research subject control;

(2) Visitor control;

(3) Contamination control;

(4) Waste control; and

(5) Notification of the Radiation Safety Officer or authorized user in case of the patient's or human research subject’s death or medical emergency.

(c) A licensee shall keep a record of individuals receiving instruction required by Paragraph C.8.35(a), a description of the instruction, the date of instruction, and the name of the individual who gave the instruction. Such record shall be maintained for inspection by the Agency for 3 years.

C.8.36 **Safety Precautions.**

(a) For each patient or human research subject receiving radiopharmaceutical therapy and hospitalized for compliance with Section C.8.24, a licensee shall:

C.8.36(a)(1)

(1) Provide a private room with a private sanitary facility;

(2) Post the patient's or human research subject's door with a "Caution: Radioactive Material" sign and note on the door or on the patient's or human research subject's chart where and how long visitors may stay in the patient's or human research subject's room;

(3) Authorize visits by individuals under 18 years of age only on a case-by-case basis with the approval of the authorized user after consultation with the Radiation Safety Officer;

(4) Promptly after administration of the dosage, measure the dose rates in contiguous restricted and unrestricted areas with a radiation measurement survey instrument to demonstrate compliance with the requirements of Sections A.2.3 and A.2.11 of these regulations and retain for 3 years a record of each survey that includes the time and date of the survey, a plan of the area or list of points surveyed, the measured dose rate at several points expressed in millirems (microsieverts) per hour, the instrument used to make the survey, and the initials of the individual who made the survey;

(5) Either monitor material and items removed from the patient's or human research subject's room to determine that any contamination cannot be distinguished from the natural background radiation level with a radiation detection survey instrument set on its most sensitive scale and with no interposed shielding, or handle these materials and items as radioactive waste;

(6) **[RESERVED]**;

(7) Survey the patient's or human research subject's room and private sanitary facility for removable contamination with a radiation detection survey instrument before assigning another patient or human research subject to the room. The room must not be reassigned until removable contamination is less than 200 disintegrations per minute (3.33 Bq) per 100 square centimeters; and

(8) Measure the thyroid burden of each individual who helped prepare or administer a dosage of iodine-131 within 3 days after administering the dosage, and retain for the period required by Section A.5.5 of these regulations a record of each thyroid burden measurement, date of measurement, the name of the individual whose thyroid burden was measured, and the initials of the individual who made the measurements.

(b) A licensee shall notify the Radiation Safety Officer or the authorized user immediately if the patient or human research subject dies or has a medical emergency.

C.8.37 **Possession of Survey Instruments.** A licensee authorized to use radioactive material for radiopharmaceutical therapy shall possess a portable radiation detection survey instrument capable of detecting dose rates over the range 0.1 millirem (1 µSv) per hour to 50 millirems (500 µSv) per hour, and a portable radiation measurement survey instrument capable of measuring dose rates over the range 1 millirem (10 µSv) per hour to 1000 millirems (10 mSv) per hour. The instruments shall be operable and calibrated in accordance with Section C.8.15.

C.8.38 **Use of Sealed Sources for Diagnosis.** A licensee shall use the following sealed sources in accordance with the manufacturer's radiation safety and handling instructions:

(a) Iodine-125 as a sealed source in a device for bone mineral analysis;

(b) Americium-241 as a sealed source in a device for bone mineral analysis;

(c) Gadolinium-153 as a sealed source in a device for bone mineral analysis; and

(d) Iodine-125 as a sealed source in a portable device for imaging.

YYYYY

C.8.39 **Availability of Survey Instrument.** A licensee authorized to use radioactive material as a sealed source for diagnostic purposes shall have available for use a portable radiation detection survey instrument capable of detecting dose rates over the range 0.1 millirem (1 µSv) per hour to 50 millirems (500 µSv) per hour or a portable radiation measurement survey instrument capable of measuring dose rates over the range 1 millirem (10 µSv) per hour to 1000 millirems (10 mSv) per hour. The instrument shall be operable and calibrated in accordance with Section C.8.15.

C.8.40 **Use of Sources for Brachytherapy.** A licensee shall use the following sources in accordance with the manufacturer's radiation safety and handling instructions:

(a) Cesium-137 as a sealed source in needles and applicator cells for topical, interstitial, and intracavitary treatment of cancer;

(b) Cobalt-60 as a sealed source in needles and applicator cells for topical, interstitial, and intracavitary treatment of cancer;

(c) Gold-198 as a sealed source in seeds for interstitial treatment of cancer;

(d) Iodine-125 as a sealed source in seeds for interstitial treatment of cancer;

(e) Iridium-192 as seeds encased in nylon ribbon for topical, interstitial, and intracavitary treatment of cancer;

(f) Strontium-90 as a sealed source in an applicator for treatment of superficial eye conditions.

(g) Palladium-103 as a sealed source in seeds for interstitial treatment of cancer.

C.8.41 **Safety Instruction.**

(a) The licensee shall provide oral and written radiation safety instruction to all personnel caring for a patient or human research subject receiving implant therapy. Refresher training shall be provided at intervals not to exceed 1 year.

(b) To satisfy Paragraph C.8.41(a), the instruction shall describe:

(1) Size and appearance of the brachytherapy sources;

(2) Safe handling and shielding instructions in case of a dislodged source;

(3) Procedures for patient or human research subject control;

(4) Procedures for visitor control; and

(5) Procedures for notification of the Radiation Safety Officer or authorized user if the patient or human research subject dies or has a medical emergency.

(c) A licensee shall maintain for 3 years a record of individuals receiving instruction required by Paragraph C.8.41(a), a description of the instruction, the date of instruction, and the name of the individual who gave the instruction.

C.8.42 **Safety Precautions.**

(a) For each patient or human research subject receiving implant therapy and not released from licensee control pursuant to Section C.8.24 of these regulations, a licensee shall:

(1) Not quarter the patient or human research subject in the same room with a patient or human research subject who is not receiving radiation therapy;

(2) Post the patient's or human research subject's door with a "Caution: Radioactive Materials" sign and note on the door or the patient's or human research subject's chart where and how long visitors may stay in the patient's or human research subject's room;

(3) Authorize visits by individuals under 18 years of age only on a case-by-case basis with the approval of the authorized user after consultation with the Radiation Safety Officer;

(4) Promptly after implanting the sources, survey the dose rates in contiguous restricted and unrestricted areas with a radiation measurement survey instrument to demonstrate compliance with Sections A.2.3 and A.2.11 of these regulations and retain for 3 years a record of each survey that includes the time and date of the survey, a sketch of the area or list of points surveyed, the measured dose rate at several points expressed in millirems (microsieverts) per hour, the instrument used to make the survey, and the initials of the individual who made the survey; and

(5) **[RESERVED]**;

(b) A licensee shall notify the Radiation Safety Officer or authorized user immediately if the patient or human research subject dies or has a medical emergency.

C.8.43 **Brachytherapy Sources Inventory.**

(a) Promptly after removing them from a patient or a human research subject, a licensee shall return brachytherapy sources to the storage area, and count or otherwise verify the number returned to ensure that all sources taken from the storage area have been returned.

(b) A licensee shall make a record of brachytherapy source utilization which includes:

(1) The names of the individuals permitted to handle the sources;

(2) The number and activity of sources removed from storage, the patient's or human research subject's name and room number, the time and date they were removed from storage, the number and activity of sources in storage after the removal, and the initials of the individual who removed the sources from storage; and

(3) The number and activity of sources returned to storage, the patient's or human research subject's name and room number, the time and date they were returned to storage, the number and activity of sources in storage after the return, and the initials of the individual who returned the sources to storage.

(c) Immediately after implanting sources in a patient or human research subject and immediately after removal of sources from a patient or human research subject, the licensee shall make a radiation survey of the patient or human research subject and the area of use to confirm that no sources have been misplaced. The licensee shall make a record of each survey.

(d) A licensee shall maintain the records required in Paragraphs C.8.43(b) and (c) for 3 years.

C.8.44 **Release of Patients Treated With Temporary Implants.**

(a) Immediately after removing the last temporary implant source from a patient or human research subject, the licensee shall make a radiation survey of the patient or human research subject with a radiation detection survey instrument to confirm that all sources have been removed. The licensee shall not release from confinement for medical care a patient or human research subject treated by temporary implant until all sources have been removed.

(b) A licensee shall maintain a record of patient or human research subject surveys which demonstrate compliance with Paragraph C.8.44(a) for 3 years. Each record shall include the date of the survey, the name of the patient or human research subject, the dose rate from the patient or human research subject expressed as millirems (microsieverts) per hour and measured within

1 meter from the patient, and the initials of the individual who made the survey.

YYYYY

C.8.45 **Possession of Survey Instrument.** A licensee authorized to use radioactive material for implant therapy shall possess a portable radiation detection survey instrument capable of detecting dose rates over the range 0.1 millirem (1 µSv) per hour to 50 millirems (500 µSv) per hour, and a portable radiation measurement survey instrument capable of measuring dose rates over the range 1 millirem (10 µSv) per hour to 1000 millirems (10 mSv) per hour. The instruments shall be operable and calibrated in accordance with C.8.15.

C.8.46 **Use of a Sealed Source in a Teletherapy Unit.** A licensee shall use cobalt-60 or cesium-137 as a sealed source in a teletherapy unit for medical use in accordance with the manufacturer's radiation safety and operating instructions.

C.8.47 **Maintenance and Repair Restrictions.** Only a person specifically licensed by the Agency, the U.S. Nuclear Regulatory Commission, or an Agreement State to perform teletherapy unit maintenance and repair shall install, relocate, or remove a teletherapy sealed source or a teletherapy unit that contains a sealed source or maintain, adjust, or repair the source drawer, the shutter or other mechanism of a teletherapy unit that could expose the source, reduce the shielding around the source, or result in increased radiation levels.

C.8.48 **Amendments.** In addition to the requirements specified in Section C.8.2, a licensee shall apply for and receive a license amendment before:

(a) Making any change in the treatment room shielding;

(b) Making any change in the location of the teletherapy unit within the treatment room;

(c) Using the teletherapy unit in a manner that could result in increased radiation levels in areas outside the teletherapy treatment room;

(d) Relocating the teletherapy unit; or

(e) Allowing an individual not listed on the licensee's license to perform the duties of the Teletherapy Physicist.

C.8.49 **Safety Instruction.**

(a) A licensee shall post written instructions at the teletherapy unit console. These instructions shall inform the operator of:

(1) The procedure to be followed to ensure that only the patient or human research subject is in the treatment room before turning the primary beam of radiation "on" to begin a treatment or after a door interlock interruption;

(2) The procedure to be followed if the operator is unable to turn the primary beam of radiation "off" with controls outside the treatment room or any other abnormal operation occurs; and

(3) The names and telephone numbers of the authorized users and Radiation Safety Officer to be immediately contacted if the teletherapy unit or console operates abnormally.

(b) A licensee shall provide instruction in the topics identified in Paragraph C.8.49(a) to all individuals who operate a teletherapy unit and shall provide appropriate refresher training to individuals at intervals not to exceed 1 year.

(c) A licensee shall maintain a record of individuals receiving instruction required by Paragraph C.8.49(b), a description of the instruction, the date of instruction, and the name of the individual who gave the instruction for 3 years.

C.8.50 **Doors, Interlocks, and Warning Systems.**

(a) A licensee shall control access to the teletherapy room by a door at each entrance.

(b) A licensee shall equip each entrance to the teletherapy room with an electrical interlock system that shall:

(1) Prevent the operator from turning the primary beam of radiation "on" unless each treatment room entrance door is closed;

(2) Turn the primary beam of radiation "off" immediately when an entrance door is opened; and

(3) Prevent the primary beam of radiation from being turned "on" following an interlock interruption until all treatment room entrance doors are closed and the beam on-off control is reset at the console.

(c) A licensee shall equip each entrance to the teletherapy room with a beam condition indicator light.

(d) The beam control mechanism shall be of a positive design capable of acting in any orientation of the housing for which it is designed to be used. In addition to an automatic closing device, the mechanism shall be designed so that it can be manually returned to the "off" position with a minimum risk of exposure.

(e) The closing device shall be so designed as to return automatically to the "off" position in the event of any breakdown or interruption of the activating force and shall stay in the "off" position until activated from the control panel.

(f) There shall be at the housing and at the control panel a warning device that plainly indicates whether the beam is "on" or "off."

(g) The equipment shall be provided with a locking device to prevent unauthorized use.

(h) The control panel shall be provided with a timer that automatically terminates the exposure after a pre-set time. The timer shall be a cumulative timer which activates with the production of radiation and retains its reading after irradiation is interrupted or terminated.

C.8.51 **Possession of Survey Instrument.** A licensee authorized to use radioactive material in a teletherapy unit and/or registrant authorized to use a radiotherapy unit in accordance with Part F.8 of these regulations shall possess a portable radiation measurement survey instrument capable of measuring dose rates over the range 1 millirem (10 µSv) per hour to 1000 millirems (10 mSv) per hour. The instruments shall be operable and calibrated in accordance with C.8.15.

C.8.52 **Radiation Monitoring Device.**

(a) A licensee shall have in each teletherapy room a permanent radiation monitor capable of continuously monitoring beam status.

(b) Each radiation monitor shall be capable of providing visible notice of a teletherapy unit malfunction that results in an exposed or partially exposed source. The visible indicator of high radiation levels shall be observable at the teletherapy control panel and by an individual entering the teletherapy room.

(c) Each radiation monitor shall be equipped with a backup power supply separate from the power supply to the teletherapy unit. This backup power supply may be a battery system.

(d) A radiation monitor shall be checked for proper operation each day before the teletherapy unit is used for treatment of patients or human research subjects.

(e) A licensee shall maintain a record of the check required by Paragraph C.8.52(d) for 3 years. The record shall include the date of the check, notation that the monitor indicates when the source is exposed, and the initials of the individual who performed the check.

C.8.52(f)

(f) If a radiation monitor is inoperable, the licensee shall require any individual entering the teletherapy room to use a survey instrument or audible alarm personal dosimeter to monitor for any malfunction of the source exposure mechanism that may result in an exposed or partially exposed source. The instrument or dosimeter shall be checked with a dedicated check source for proper operation at the beginning of each day of use. The licensee shall keep a record as described in Paragraph C.8.52(e).

(g) A licensee shall promptly repair or replace the radiation monitor if it is inoperable.

C.8.53 **Viewing System.** A licensee shall construct or equip each teletherapy room to permit continuous observation of the patient or human research subject from the teletherapy unit console during irradiation. Windows, mirror systems, closed-circuit television viewing screens or other equivalent viewing systems shall be so located that the operator may see the patient or human research subject from the treatment control panel. When the primary viewing system is by electronic means (e.g., television), an alternate viewing system, which may be electronic, shall be provided for use in the event of failure of the primary viewing system.

C.8.54 **Dosimetry Equipment.**

(a) A licensee authorized to use radioactive material in a teletherapy unit shall have a calibrated dosimetry system available for use. To satisfy this requirement, one of the following two conditions shall be met:

(1) The system shall have been calibrated by the National Institute for Standards and Technology or by a calibration laboratory accredited by the American Association of Physicists in Medicine. The calibration shall have been performed within the previous 2 years and after any servicing that may have affected system calibration; or

(2) The system shall have been calibrated within the previous 4 years; 18 to 30 months after that calibration, the system shall have been intercompared with another dosimetry system that was calibrated within the past 24 months by the National Institute for Standards and Technology or by a calibration laboratory accredited by the American Association of Physicists in Medicine. This intercomparison shall be performed by a Teletherapy Physicist. The results of the intercomparison must have indicated that the calibration factor of the licensee's or registrant's system had not changed by more than 2 percent. The licensee shall not use the intercomparison result to change the calibration factor. When intercomparing dosimetry systems to be used for calibrating cobalt-60 teletherapy units, the licensee shall use a teletherapy unit with a cobalt-60 source. When intercomparing dosimetry systems to be used for calibrating cesium-137 teletherapy units, the licensee shall use a teletherapy unit with a cesium-137 source.

(b) The licensee shall have available for use a dosimetry system for spot-check measurements. To meet this requirement, the system may be compared with a system that has been calibrated in accordance with Paragraph C.8.54(a). This comparison shall have been performed within the previous year and after each servicing that may have affected system calibration. The spot-check system may be the same system used to meet the requirement in Paragraph C.8.54(a).

(c) The licensee shall maintain a record of each calibration, intercomparison, and comparison for the duration of the license and/or registration. For each calibration, intercomparison, or comparison, the record shall include the date, the model numbers and serial numbers of the instruments that were calibrated, intercompared, or compared as required by Paragraphs C.8.54(a) and (b), the correction factors that were determined, the names of the individuals who performed the calibration, intercomparison, or comparison, and evidence that the intercomparison was performed by a Teletherapy Physicist.

C.8.55 **Full Calibration Measurements.**

(a) Any licensee authorized under C.5.2 and/or C.8 to use a teletherapy unit for medical use shall perform full calibration measurements on each teletherapy unit:

(1) Before the first medical use of the unit;

(2) Before medical use under the following conditions:

(i) Whenever spot-check measurements indicate that the radiation output differs by more than 5 percent from the value obtained at the last full calibration corrected mathematically for radioactive decay (for Co-60 and Cs-137);

(ii) Following replacement of the radiation source or following reinstallation of the teletherapy unit in a new location; and

(iii) Following any repair of the teletherapy unit that includes removal of the radiation source or major repair of the components associated with the source exposure assembly; and

(3) At intervals not exceeding 1 year.

(b) To satisfy the requirement of Paragraph C.8.55(a), full calibration measurements shall include determination of:

(1) The radiation output within 3 percent for the range of field sizes and for the distance or range of distances used for medical use;

(2) The coincidence of the radiation field and the field indicated by the light beam localizing device;

(3) The uniformity of the radiation field and its dependence on the orientation of the useful beam;

(4) Timer constancy and linearity over the range of use;

(5) "On-off" error; and

(6) The accuracy of all distance measuring and localization devices in medical use.

(c) A licensee shall use the dosimetry system described in Section C.8.54 to measure the radiation output for one set of exposure conditions. The remaining radiation measurements required in Subparagraph C.8.55(b)(1) may then be made using a dosimetry system that indicates relative dose rates.

(d) A licensee shall make full calibration measurements required by Paragraph C.8.55(a) in accordance with: the procedures recommended by the Scientific Committee on Radiation Dosimetry of the American Association of Physicists in Medicine that are described in Physics in Medicine and Biology Vol. 16, No. 3, 1971, pp. 379-396; or by Task Group 21 of the Radiation Therapy Committee of the American Association of Physicists in Medicine that are described in Medical Physics Vol. 10, No. 6, 1983, pp. 741-771, and Vol. 11, No. 2, 1984, p.213; or other calibration procedures approved by the Agency.

(e) A licensee shall correct mathematically the outputs determined in Subparagraph C.8.55(b)(1) for physical decay for intervals not exceeding 1 month for cobalt-60 and intervals not exceeding 6 months for cesium-137.

(f) Full calibration measurements required by Paragraph C.8.55(a) and physical decay corrections required by Paragraph C.8.55(e) shall be performed by a Teletherapy Physicist.

(g) A licensee shall maintain a record of each calibration for the duration of the license and/or registration. The record shall include the date of the calibration, the manufacturer's name, model number, and serial number for both the teletherapy unit and the source, the model numbers and serial numbers of the instruments used to calibrate the teletherapy unit, tables that describe the radiation output of the unit over the range of field sizes and for the range of distances used in radiation therapy, a determination of the coincidence of the radiation field and the field indicated by the light beam localizing device, the measured timer accuracy for a typical treatment time, the calculated "on-off" error, the estimated accuracy of each distance measuring or localization device, and the signature of the Teletherapy Physicist.

C.8.56 **Periodic Spot Checks.**

(a) A licensee authorized under C.5.2 and/or C.8 to use teletherapy units for medical use shall perform output spot checks on each teletherapy unit at intervals not to exceed 1 month.

(b) To satisfy the requirement of Paragraph C.8.56(a), spot checks shall include determination of:

(1) Timer constancy and timer linearity over the range of use;

(2) "On-off" error;

(3) The coincidence of the radiation field and the field indicated by the light beam localizing device;

(4) The accuracy of all distance measuring and localization devices used for medical use;

(5) The radiation output for one typical set of operating conditions; and

(6) The difference between the measurement made in Subparagraph C.8.56(b)(5) and the anticipated radiation output, expressed as a percentage of the anticipated value obtained at last full calibration corrected mathematically for physical decay (for Co-60 and Cs-137).

(c) A licensee shall use the dosimetry system described in Section C.8.54 to make the spot check required in Subparagraph C.8.56(b)(5).

(d) A licensee shall perform spot checks required by Paragraph C.8.56(a) in accordance with procedures established by the Teletherapy Physicist. That individual does not need to actually perform the output spot-check measurements.

(e) A licensee shall have the Teletherapy Physicist review the results of each radiation output spot check within 15 days. The Teletherapy Physicist shall promptly notify the licensee in writing of the results of each radiation output spot check. The licensee shall keep a copy of each written notification for 3 years.

(f) A licensee authorized to use a teletherapy unit for medical use shall perform safety spot checks of each teletherapy facility at intervals not to exceed 1 month.

(g) To satisfy the requirement of Paragraph C.8.56(f), safety spot checks shall assure proper operation of:

(1) Electrical interlocks at each teletherapy room entrance;

(2) Electrical or mechanical stops installed for the purpose of limiting use of the primary beam of radiation restriction of source housing angulation or elevation, carriage or stand travel, and operation of the beam "on-off" mechanism;

(3) Beam condition indicator lights on the teletherapy unit, on the control console, and in the facility;

(4) Viewing systems;

(5) Treatment room doors from inside and outside the treatment room; and

(6) Electrically assisted treatment room doors with the teletherapy unit electrical power turned "off".

(h) A licensee shall promptly repair any system identified in Paragraph C.8.56(g) that is not operating properly.

(i) A licensee shall maintain a record of each spot check required by Paragraphs C.8.56(a) and (f) for 3 years. The record shall include the date of the spot check, the manufacturer's name, model number, and serial number for both the teletherapy unit, and source, the manufacturer's name, model number and serial number of the instrument used to measure the radiation output of the teletherapy unit, the measured timer constancy and linearity over the range of use, the calculated "on-off" error, a determination of the coincidence of the radiation field and the field indicated by the light beam localizing device, the measured timer accuracy for a typical treatment time, the calculated "on-off" error, the estimated accuracy of each distance measuring or localization device, the difference between the anticipated radiation output and the measured

radiation output, notations indicating the operability of each entrance door electrical interlock, each electrical or mechanical stop, each beam condition indicator light, the viewing system and doors, and the signature of the individual who performed the periodic spot check.

C.8.57 **Radiation Surveys for Teletherapy Facilities.**

(a) Before medical use, after each installation of a teletherapy source, and after making any change for which an amendment is required by Section C.8.48, the licensee shall perform radiation surveys with an operable radiation measurement survey instrument calibrated in accordance with Section C.8.15 to verify that:

(1) The maximum and average radiation levels at 1 meter from the teletherapy source with the source in the "off" position and the collimators set for a normal treatment field do not exceed 10 millirems (100 µSv) per hour and 2 millirems (20 µSv) per hour, respectively; and

(2) With the teletherapy source in the "on" position with the largest clinically available treatment field and with a scattering phantom in the primary beam of radiation, that:

(i) Radiation dose rates in restricted areas are not likely to cause any occupationally exposed individual to receive a dose in excess of the limits specified in Section A.2.3 of these regulations; and

(ii) Radiation dose rates in unrestricted areas are not likely to cause any individual member of the public to receive a dose in excess of the limits specified in Paragraph A.2.11(a) of these regulations.

(3) For teletherapy equipment installed after 1 January 1980, the leakage radiation measured at 1 meter from the source when the beam control mechanism is in the "on" position shall not exceed 0.1 percent of the useful beam exposure rate at one meter from the source.

(4) Adjustable or removable beam-defining diaphragms shall allow transmission of not more than 5 percent of the useful beam.

(b) If the results of the surveys required in Paragraph C.8.57(a) indicate any radiation levels in excess of the respective limit specified in that paragraph, the licensee shall lock the control in the "off" position and not use the unit:

(1) Except as may be necessary to repair, replace, or test the teletherapy unit, the teletherapy unit shielding, or the treatment room shielding; or

(2) Until the licensee has received a specific exemption from the Agency.

(c) A licensee shall maintain a record of the radiation measurements made following installation of a source for the duration of the license. The record shall include the date of the measurements, the reason the survey is required, the manufacturer's name, model number and serial number of the teletherapy unit, the source, and the instrument used to measure radiation levels, each dose rate measured around the teletherapy source while in the "off" position and the average of all measurements, a plan of the areas surrounding the treatment room that were surveyed, the measured dose rate at several points in each area expressed in millirems (microsieverts) per hour, the calculated maximum level of radiation over a period of 1 week for each restricted and unrestricted area, and the signature of the Radiation Safety Officer.

C.8.58 **Safety Spot Checks for Teletherapy Facilities.**

(a) A licensee shall promptly spot check all systems listed in Paragraph C.8.56(g) for proper function after each installation of a teletherapy source and after making any change for which an amendment is required by Section C.8.48.

(b) If the results of the spot checks required in Paragraph C.8.58(a) indicate the malfunction of any system specified in Section C.8.56(g), the licensee shall lock the control console in the "off" position and not use the unit except as may be necessary to repair, replace, or check the malfunctioning system.

(c) A licensee shall maintain a record of the facility checks following installation of a source for 3 years. The record shall include notations indicating the operability of each entrance door interlock, each electrical or mechanical stop, each beam condition indicator light, the viewing system, doors, and the signature of the Radiation Safety Officer.

C.8.59 **Modification of Teletherapy Unit or Room Before Beginning a Treatment Program.** If the survey required by Section C.8.57 indicates that any individual member of the public is likely to receive a dose in excess of the limits specified by Paragraph A.2.11(a) of these regulations, before beginning the treatment program the licensee shall:

(a) Either equip the unit with stops or add additional radiation shielding to ensure compliance with Paragraph A.2.11(a) of these regulations;

(b) Perform the survey required by Section C.8.57 again; and

(c) Include in the report required by Section C.8.60 the results of the initial survey, a description of the modification made to comply with Paragraph C.8.59(a), and the results of the second survey; or

(d) Request and receive a license amendment under Paragraph A.2.11(c) of these regulations that authorizes radiation levels in unrestricted areas greater than those permitted by Paragraph A.2.11(a) of these regulations.

C.8.60 **Reports of Teletherapy Surveys, Checks, Tests, and Measurements.** A licensee shall furnish a copy of the records required in Sections C.8.57, C.8.58, C.8.59 and the radiation output from the teletherapy source determined during the full calibration required in Section C.8.55 to the Agency within 30 days following completion of the action that initiated the record requirement.

C.8.61 **Five Year Inspection.**

(a) A licensee shall have each teletherapy unit fully inspected and serviced during teletherapy source replacement or at intervals not to exceed 5 years, whichever comes first, to assure proper functioning of the source exposure mechanism.

(b) This inspection and servicing shall only be performed by persons specifically licensed to do so by the Agency, an Agreement State, or the U.S. Nuclear Regulatory Commission.

(c) A licensee shall maintain a record of the inspection and servicing for the duration of the license. The record shall contain the inspector's name, the inspector's license number, the date of inspection, the manufacturer's name and model number and serial number for both the teletherapy unit and source, a list of components inspected, a list of components serviced and the type of service, a list of components replaced, and the signature of the inspector.

C.8.62 **Radiation Safety Officer.** Except as provided in Section C.8.63, an individual fulfilling the responsibilities of the Radiation Safety Officer as provided in Section C.8.5 shall:

(a) Be certified by the:

(1) American Board of Health Physics in Comprehensive Health Physics;

(2) American Board of Radiology in Radiological Physics, Therapeutic Radiological Physics, or Medical Nuclear Physics;

(3) American Board of Nuclear Medicine;

(4) American Board of Science in Nuclear Medicine

(5) Board of Pharmaceutical Specialties in Nuclear Pharmacy; or

(6) American Osteopathic Board of Radiology or American Osteopathic Board of Nuclear Medicine; or

(7) American Board of Medical Physics in radiation oncology physics; or

(8) Royal College of Physicians and Surgeons of Canada in nuclear medicine; or

C.8.62(b)

(b) Have had 200 hours of classroom and laboratory training as follows:

(1) Radiation physics and instrumentation;

(2) Radiation protection;

(3) Mathematics pertaining to the use and measurement of radioactivity;

(4) Radiation biology;

(5) Radiopharmaceutical chemistry; and

(6) 1 year of full time experience in radiation safety at a medical institution under the supervision of the individual identified as the Radiation Safety Officer on an Agency, Agreement State, Licensing State, or U.S. Nuclear Regulatory Commission license that authorizes the medical use of radioactive material; or

(c) Be an authorized user for those radioactive material uses that come within the Radiation Safety Officer's responsibilities.

C.8.63 **Training for Experienced Radiation Safety Officer.** An individual identified as a Radiation Safety Officer on an Agency, Agreement State, Licensing State, or U.S. Nuclear Regulatory Commission license on 8 March 1990 who oversees only the use of radioactive material for which the licensee was authorized on that date need not comply with the training requirements of Section C.8.62.

C.8.64 **Training for Uptake, Dilution, or Excretion Studies.** Except as provided in Section C.8.72 and C.8.73, the licensee shall require the authorized user of a radiopharmaceutical listed in Section C.8.28 to be a physician who:

(a) Is certified in:

(1) Nuclear medicine by the American Board of Nuclear Medicine;

(2) Diagnostic radiology by the American Board of Radiology;

(3) Diagnostic radiology or radiology within the previous five years by the American Osteopathic Board of Radiology; or

(4) Nuclear Medicine by the American Osteopathic Board of Nuclear Medicine; or

(5) Nuclear medicine by the Royal College of Physicians and Surgeons of Canada; or

(b) Has completed 40 hours of instruction in basic radionuclide handling techniques applicable to the use of prepared radiopharmaceuticals, and 20 hours of supervised clinical experience.

(1) To satisfy the basic instruction requirement, 40 hours of classroom and laboratory instruction shall include:

(i) Radiation physics and instrumentation;

(ii) Radiation protection;

(iii) Mathematics pertaining to the use and measurement of radioactivity;

(iv) Radiation biology; and

(v) Radiopharmaceutical chemistry.

(2) To satisfy the requirement for 20 hours of supervised clinical experience, training must be under the supervision of an authorized user at a medical institution and shall include:

(i) Examining patients or human research subjects and reviewing their case histories to determine their suitability for radionuclide diagnosis, limitations, or contraindications;

(ii) Selecting the suitable radiopharmaceuticals and calculating and measuring the dosages;

(iii) Administering dosages to patients or human research subjects and using syringe radiation shields;

(iv) Collaborating with the authorized user in the interpretation of radionuclide test results; and

(v) Patient or human research subjects followup; or

(c) Has successfully completed a 6 month training program in nuclear medicine as part of a training program that has been approved by the Accreditation Council for Graduate Medical Education or the Committee on Postdoctoral Training of the American Osteopathic Association and that included classroom and laboratory training, work experience, and supervised clinical experience in all the topics identified in Paragraph C.8.64(b).

C.8.65 **Training for Imaging and Localization Studies.** Except as provided in Sections C.8.72 or C.8.73, the licensee shall require the authorized user of a radiopharmaceutical, generator, or reagent kit specified in Section C.8.30 to be a physician who:

(a) Is certified in:

(1) Nuclear medicine by the American Board of Nuclear Medicine;

(2) Diagnostic radiology by the American Board of Radiology;

(3) Diagnostic radiology or radiology within the previous 5 years by the American Osteopathic Board of Radiology; or

(4) Nuclear Medicine by the American Osteopathic Board of Nuclear Medicine; or

(5) Nuclear medicine by the Royal College of Physicians and Surgeons of Canada; or

(b) Has completed 200 hours of instruction in basic radionuclide handling techniques applicable to the use of prepared radiopharmaceuticals, generators, and reagent kits, 500 hours of supervised work experience, and 500 hours of supervised clinical experience.

(1) To satisfy the basic instruction requirement, 200 hours of classroom and laboratory training shall include:

(i) Radiation physics and instrumentation;

(ii) Radiation protection;

(iii) Mathematics pertaining to the use and measurement of radioactivity;

(iv) Radiopharmaceutical chemistry; and

(v) Radiation biology.

(2) To satisfy the requirement for 500 hours of supervised work experience, training shall be under the supervision of an authorized user at a medical institution and shall include:

(i) Ordering, receiving, and unpacking radioactive materials safely and performing the related radiation surveys;

(ii) Calibrating dose calibrators and diagnostic instruments and performing checks for proper operation of survey meters;

YYYYY

(iii) Calculating and safely preparing patient or human research subject dosages;

(iv) Using administrative controls to prevent the misadministration of radioactive material;

(v) Using emergency procedures to contain spilled radioactive material safely and using proper decontamination procedures; and

(vi) Eluting technetium-99m from generator systems, assaying and testing the eluate for molybdenum-99 and alumina contamination, and processing the eluate with reagent kits to prepare technetium-99m labeled radiopharmaceuticals.

(3) To satisfy the requirement for 500 hours of supervised clinical experience, training shall be under the supervision of an authorized user at a medical institution and shall include:

(i) Examining patients or human research subjects and reviewing their case histories to determine their suitability for radionuclide diagnosis, limitations, or contraindications;

(ii) Selecting the suitable radiopharmaceuticals and calculating and measuring the dosages;

(iii) Administering dosages to patients or human research subjects and using syringe radiation shields;

(iv) Collaborating with the authorized user in the interpretation of radionuclide test results; and

(v) Patient or human research subjects followup; or

(c) Has successfully completed a 6 month training program in nuclear medicine that has been approved by the Accreditation Council for Graduate Medical Education and that included classroom and laboratory training, work experience, and supervised clinical experience in all the topics identified in Paragraph C.8.65(b).

C.8.66 **Training for Therapeutic Use of Radiopharmaceuticals.** Except as provided in Section C.8.72, the licensee shall require the authorized user of a radiopharmaceutical listed in Section C.8.34 for therapy to be a physician who:

(a) Is certified by:

(1) The American Board of Nuclear Medicine; or

(2) The American Board of Radiology in radiology, radiation oncology or therapeutic radiology; or

(3) Nuclear medicine by the Royal College of Physicians and Surgeons of Canada; or

(4) The American Osteopathic Board of Radiology after 1984; or

(b) Has completed 80 hours of instruction in basic radionuclide handling techniques applicable to the use of therapeutic radiopharmaceuticals, and has had supervised clinical experience.

(1) To satisfy the requirement for instruction, 80 hours of classroom and laboratory training shall include:

(i) Radiation physics and instrumentation;

(ii) Radiation protection;

(iii) Mathematics pertaining to the use and measurement of radioactivity; and

(iv) Radiation biology;

(2) To satisfy the requirement for supervised clinical experience, training shall be under the supervision of an authorized user at a medical institution and shall include:

(i) Use of iodine-131 for diagnosis of thyroid function and the treatment of hyperthyroidism or cardiac dysfunction in ten individuals;

(ii) Use of soluble phosphorus-32 for the treatment of ascites, polycythemia vera, leukemia, or bone metastases in three individuals;

(iii) Use of iodine-131 for treatment of thyroid carcinoma in three individuals; and

(iv) Use of colloidal chromic phosphorus-32 or of colloidal gold-198 for intra- cavitary treatment of malignant effusions in three individuals.

C.8.67 **Training for Therapeutic Use of Brachytherapy Sources.** Except as provided in Section C.8.72, the licensee shall require the authorized user using a brachytherapy source specified in Section C.8.40 for therapy to be a physician who:

(a) Is certified in:

(1) Radiology, radiation oncology or therapeutic radiology by the American Board of Radiology;

(2) Radiation oncology by the American Osteopathic Board of Radiology;

(3) Radiology, with a specialization in radiotherapy, as a British "Fellow of the Faculty of Radiology" or "Fellow of the Royal College of Radiology"; or

(4) Therapeutic radiology by the Canadian Royal College of Physicians and Surgeons; or

(b) Is in the active practice of therapeutic radiology, has completed 200 hours of instruction in basic radionuclide handling techniques applicable to the therapeutic use of brachytherapy sources and 500 hours of supervised work experience and a minimum of 3 years of supervised clinical experience.

(1) To satisfy the requirement for instruction, 200 hours of classroom and laboratory training shall include:

(i) Radiation physics and instrumentation;

(ii) Radiation protection;

(iii) Mathematics pertaining to the use and measurement of radioactivity; and

(iv) Radiation biology.

(2) To satisfy the requirement for 500 hours of supervised work experience, training shall be under the supervision of an authorized user at a medical institution and shall include:

(i) Ordering, receiving, and unpacking radioactive materials safely and performing the related radiation surveys;

(ii) Checking survey meters for proper operation;

(iii) Preparing, implanting, and removing sealed sources;

(iv) Using administrative controls to prevent the misadministration of radioactive material; and

(v) Using emergency procedures to control radioactive material.

(3) To satisfy the requirement for a period of supervised clinical experience, training

shall include 1 year in a formal training program approved by the Residency Review Committee for Radiology of the Accreditation Council for Graduate Medical Education or the Committee on Postdoctoral Training of the American Osteopathic Association, and an additional 2 years of clinical experience in therapeutic radiology under the supervision of an authorized user at a medical institution. The supervised clinical experience shall include:

(i) Examining individuals and reviewing their case histories to determine their suitability for brachytherapy treatment, and any limitations or contraindications;

(ii) Selecting the proper brachytherapy sources, dose, and method of administration;

(iii) Calculating the dose; and

(iv) Post-administration followup and review of case histories in collaboration with the authorized user.

C.8.68 **Training for Ophthalmic Use of Strontium-90.** Except as provided in Section C.8.72, the licensee shall require the authorized user using only strontium-90 for ophthalmic radiotherapy to be a physician who:

(a) Is certified in radiology or therapeutic radiology by the American Board of Radiology; or

(b) Is in the active practice of therapeutic radiology or ophthalmology, and has completed 24 hours of instruction in basic radionuclide handling techniques applicable to the use of strontium-90 for ophthalmic radiotherapy, and a period of supervised clinical training in ophthalmic radiotherapy.

(1) To satisfy the requirement for instruction, the classroom and laboratory training shall include:

(i) Radiation physics and instrumentation;

(ii) Radiation protection;

(iii) Mathematics pertaining to the use and measurement of radioactivity; and

(iv) Radiation biology.

(2) To satisfy the requirement for a period of supervised clinical training in ophthalmic radiotherapy, training shall be under the supervision of an authorized user at a medical institution and shall include the use of strontium-90 for the ophthalmic treatment of five individuals that includes:

(i) Examination of each individual to be treated;

(ii) Calculation of the dose to be administered;

(iii) Administration of the dose; and

(iv) Followup and review of each individual's case history.

C.8.69 **Training for Use of Sealed Sources for Diagnosis.** Except as provided in Section C.8.72, the licensee shall require the authorized user using a sealed source in a device specified in Section C.8.38 to be a physician, dentist, or podiatrist who:

(a) Is certified in:

(1) Radiology, diagnostic radiology with special competence in nuclear radiology, or therapeutic radiology by the American Board of Radiology;

(2) Nuclear medicine by the American Board of Nuclear Medicine;

(3) Diagnostic radiology or radiology by the American Osteopathic Board of Radiology;or

(4) Nuclear Medicine by the American Osteopathic Board of Nuclear Medicine; or

(5) Nuclear medicine by the Royal College of Physicians and Surgeons of Canada; or

(b) Has completed 8 hours of instruction in basic radionuclide handling techniques specifically applicable to the use of the device. To satisfy the requirement for instruction, the training shall include:

(1) Radiation physics, mathematics pertaining to the use and measurement of radioactivity, and instrumentation;

(2) Radiation biology; and

(3) Radiation protection and training in the use of the device for the purposes authorized by the license.

C.8.70 **Training for Teletherapy.** Except as provided in Section C.8.72, the licensee shall require the authorized user of either a sealed source specified in Section C.8.46 for use in a teletherapy unit to be a physician who:

(a) Is certified in:

(1) Radiology, radiation oncology or therapeutic radiology by the American Board of Radiology;

(2) Radiation oncology by the American Osteopathic Board of Radiology;

(3) Radiology, with specialization in radiotherapy, as a British "Fellow of the Faculty of Radiology" or "Fellow of the Royal College of Radiology"; or

(4) Therapeutic radiology by the Canadian Royal College of Physicians and Surgeons; or

(b) Is in the active practice of therapeutic radiology, and has completed 200 hours of instruction in basic radionuclide techniques applicable to the use of a sealed source in a teletherapy unit, 500 hours of supervised work experience, and a minimum of 3 years of supervised clinical experience.

(1) To satisfy the requirement for instruction, the classroom and laboratory training shall include:

(i) Radiation physics and instrumentation;

(ii) Radiation protection;

(iii) Mathematics pertaining to the use and measurement of radioactivity; and

(iv) Radiation biology.

(2) To satisfy the requirement for supervised work experience, training shall be under the supervision of an authorized user at an institution and shall include:

(i) Review of the full calibration measurements and periodic spot checks;

(ii) Preparing treatment plans and calculating treatment times;

(iii) Using administrative controls to prevent misadministrations;

(iv) Implementing emergency procedures to be followed in the event of the abnormal operation of a teletherapy unit or console; and

(v) Checking and using survey meters.

(3) To satisfy the requirement for a period of supervised clinical experience, training shall include 1 year in a formal training program approved by the Residency Review Committee for Radiology of the Accreditation Council for Graduate Medical Education or the Committee on Postdoctoral Training of the American Osteopathic Association and an additional 2 years of clinical experience in therapeutic radiology under the supervision of an authorized user at a medical institution. The supervised clinical experience shall include:

(i) Examining individuals and reviewing their case histories to determine their suitability for teletherapy treatment, and any limitations or contraindications;

(ii) Selecting the proper dose and how it is to be administered;

(iii) Calculating the teletherapy doses and collaborating with the authorized user in the review of patients' or human research subjects' progress and consideration of the need to modify originally prescribed doses as warranted by patients' or human research subjects' reaction to radiation; and

(iv) Post-administration followup and review of case histories.

C.8.71 **Training for Teletherapy Physicist.** The licensee shall require the Teletherapy Physicist to:

(a) Be registered with the Agency, under the provisions of Subpart B.4 of these regulations, as a provider of radiation services in the area of calibration and compliance surveys of teletherapy units.

(b) Be certified by the:

(1) American Board of Radiology in:

(i) Therapeutic radiological physics; or

(ii) Roentgen-ray and gamma-ray physics; or

(iii) X-ray and radium physics; or

(iv) Radiological physics; or

(2) American Board of Medical Physics in radiation oncology physics; or

(3) X-ray and radium physics; or

(4) Radiological physics; or

(c) Hold a master's or doctor's degree in physics, biophysics, radiological physics, or health physics, and have completed 1 year of full time training in therapeutic radiological physics and also 1 year of full time work experience under the supervision of a Teletherapy Physicist at a medical institution. To meet this requirement, the individual shall have performed the tasks listed in Sections C.8.18, C.8.55, C.8.56, and C.8.57 under the supervision of a Teletherapy Physicist during the year of work experience.

C.8.72 **Training for Experienced Authorized Users.** Practitioners of the healing arts identified as authorized users for the human use of radioactive material on an Agency, NRC or Agreement State or Licensing State license on 8 March 1990 who perform only those methods of use for which they were authorized on that date need not comply with the training requirements of Sections C.8.62 through C.8.74.

C.8.73 **Physician Training in a Three-Month Program.** A physician who, before July 1, 1984, began a 3-month nuclear medicine training program approved by the Accreditation Council for Graduate Medical Education and has successfully completed the program, is exempted from the requirements of Sections C.8.64 or C.8.65.

C.8.74 **Recentness of Training.** The training and experience specified in this Subpart shall have been obtained within the 7 years preceding the date of application or the individual shall have had related continuing education and experience since the required training and experience was completed.

[REMAINDER OF PAGE INTENTIONALLY LEFT BLANK]

C.8.75 **Radiation Safety Program Changes.**

(a) A licensee may make minor changes in radiation safety procedures that are not potentially important to safety, i.e. ministerial changes, that were described in the application for license, renewal or amendment except for those changes in Sections C.8.2 and C.8.48 of these regulations. Examples of such ministerial changes include: editing of procedures for clarity or conformance with local drafting policy or updating names, telephone numbers, and addresses; adoption of model radiation safety procedures published in NRC or Agency Regulatory Guides; replacement of equipment; reassignment of tasks among employees; or assignment of service contracts for services such as personnel dosimetry, radiation safety equipment repair or calibration, waste disposal, and safety surveys. A licensee is responsible for assuring that any change is in compliance with the requirements of these regulations and the license.

(b) A licensee shall retain a record of each change until the license has been renewed or terminated. The record must include the effective date of the change, a copy of the old and new radiation safety procedures, the reason for the change, a summary of radiation safety matters that were considered before making the change, the signature of the Radiation Safety Officer, and the signatures of the affected authorized users and of management or, in a medical institution, the Radiation Safety Committee's chairman and the management representative.

(c) A copy of the record required by Paragraph C.8.75(b) of these regulations must be submitted to the Agency within thirty days of adopting said change(s).

C.8.76 **Training for an Authorized Nuclear Pharmacist.** The licensee shall require the authorized nuclear pharmacist to be a pharmacist who:

(a) Possesses a current license as a pharmacist in accordance with the Rules and Regulations Pertaining to Pharmacists, Pharmacies and Manufacturers, Wholesalers and Distributors [R5-19-PHAR] of the Rhode Island Department of Health; and

(b) Has current board certification as a nuclear pharmacist by the Board of Pharmaceutical Specialties; or

(c) (1) Has completed 700 hours in a structured educational program consisting of both:

(i) Didactic training in the following areas:

(a) Radiation physics and instrumentation;

(b) Radiation protection;

(c) Mathematics pertaining to the use and measurement of radioactivity; and

(d) Chemistry of radioactive material for medical use; and

(e) Radiation biology; and

(ii) Supervised experience in a nuclear pharmacy involving the following:

(a) Shipping, receiving, and performing related radiation surveys;

(b) Using and performing checks for dose calibrators, survey meters, and, if appropriate, instruments used to measure alpha- or beta-emitting radionuclides;

(c) Calculating, assaying, and safely preparing dosages for patients or human research subjects;

(d) Using administrative controls to prevent the misadministration of radioactive material;

(e) Using procedures to prevent or minimize contamination and using proper

decontamination procedures; and

C.8.76(c)(2)

(2) Has obtained written certification, signed by a preceptor authorized nuclear pharmacist, that the above training has been satisfactorily completed and that the individual has achieved a level of competency sufficient to independently operate a nuclear pharmacy.

C.8.77 **Training for Experienced Nuclear Pharmacists.** A licensee may apply for and must receive a license amendment identifying an experienced nuclear pharmacist as an authorized nuclear pharmacist before it allows this individual to work as an authorized nuclear pharmacist. A pharmacist who has completed a structured educational program as specified in Subparagraph C.8.76(b)(1) of these regulations before 2 December 1994, and who is working in a nuclear pharmacy would qualify as an experienced nuclear pharmacist. An experienced nuclear pharmacist need not comply with the requirements on preceptor statement [C.8.76(b)(2)] and recentness of training [C.8.74] to qualify as an authorized nuclear pharmacist.

[REMAINDER OF PAGE INTENTIONALLY LEFT BLANK]

PART C

APPENDIX A

EXEMPT CONCENTRATIONS

Element (atomic number)	Isotope	Column I Gas concentration µCi/ml[1]	Column II Liquid and solid µCi/ml[2]
Antimony (51)	Sb-122		$3X10^{-4}$
	Sb-124		$2X10^{-4}$
	Sb-125		$1x10^{-3}$
Argon (18)	Ar-37	$1x10^{-3}$	
	Ar-41	$4X10^{-7}$	
Arsenic (33)	As-73		$5X10^{-3}$
	As-74		$5X10^{-4}$
	As-76		$2X10^{-4}$
	As-77		$8X10^{-4}$
Barium (56)	Ba-131		$2X10^{-3}$
	Ba-140		$3X10^{-4}$
Beryllium (4)	Be-7		$2X10^{-2}$
Bismuth (83)	Bi-206		$4X10^{-4}$
Bromine (35)	Br-82	$4X10^{-7}$	$3X10^{-3}$
Cadmium (48)	Cd-109		$2X10^{-3}$
	Cd-115m		$3X10^{-4}$
	Cd-115		$3X10^{-4}$
Calcium (20)	Ca-45		$9X10^{-5}$
	Ca-47		$5X10^{-4}$
Carbon (6)	C-14	$1x10^{-6}$	$8X10^{-3}$
Cerium (58)	Ce-141		$9X10^{-4}$
	Ce-143		$4X10^{-4}$
	Ce-144		$1x10^{-4}$
Cesium (55)	Cs-131		$2X10^{-2}$
	Cs-134m		$6X10^{-2}$
	Cs-134		$9X10^{-5}$
Chlorine (17)	Cl-38	$9X10^{-7}$	$4X10^{-3}$
Chromium (24)	Cr-51		$2X10^{-2}$
Cobalt (27)	Co-57		$5X10^{-3}$
	Co-58		$1x10^{-3}$
	Co-60		$5X10^{-4}$
Copper (29)	Cu-64		$3X10^{-3}$
Dysprosium (66)	Dy-165		$4X10^{-3}$
	Dy-166		$4X10^{-4}$
Erbium (68)	Er-169		$9X10^{-4}$
	Er-171		$1x10^{-3}$
Europium (63)	Eu-152 ($T_{1/2}$=9.2 h)		$6X10^{-4}$
	Eu-155		$2X10^{-3}$
Fluorine (9)	F-18	$2X10^{-6}$	$8X10^{-3}$
Gadolinium (64)	Gd-153		$2X10^{-3}$
	Gd-159		$8X10^{-4}$

[illegible]

[illegible]

Element (atomic number)	Isotope	Column I Gas concentration µCi/ml[1]	Column II Liquid and solid µCi/ml[2]
Gallium (31)	Ga-72		$4X10^{-4}$
Germanium (32)	Ge-71		$2X10^{-2}$
Gold (79)	Au-196		$2X10^{-3}$
	Au-198		$5X10^{-4}$
	Au-199		$2X10^{-3}$
Hafnium (72)	Hf-181		$7X10^{-4}$
Hydrogen (1)	H-3	$5X10^{-6}$	$3X10^{-2}$
Indium (49)	In-113m		$1x10^{-2}$
	In-114m		$2X10^{-4}$
Iodine (53)	I-126	$3X10^{-9}$	$2X10^{-5}$
	I-131	$3X10^{-9}$	$2X10^{-5}$
	I-132	$8X10^{-8}$	$6X10^{-4}$
	I-133	$1x10^{-8}$	$7X10^{-5}$
	I-134	$2X10^{-7}$	$1x10^{-3}$
Iridium (77)	Ir-190		$2X10^{-3}$
	Ir-192		$4X10^{-4}$
	Ir-194		$3X10^{-4}$
Iron (26)	Fe-55		$8X10^{-3}$
	Fe-59		$6X10^{-4}$
Krypton (36)	Kr-85m		$1x10^{-6}$
	Kr-85		$3X10^{-6}$
Lanthanum (57)	La-140		$2X10^{-4}$
Lead (82)	Pb-203		$4X10^{-3}$
Lutetium (71)	Lu-177		$1x10^{-3}$
Manganese (25)	Mn-52		$3X10^{-4}$
	Mn-54		$1x10^{-3}$
	Mn-56		$1x10^{-3}$
Mercury (80)	Hg-197m		$2X10^{-3}$
	Hg-197		$3X10^{-3}$
	Hg-203		$2X10^{-4}$
Molybdenum (42)	Mo-99		$2X10^{-3}$
Neodymium (60)	Nd-147		$6X10^{-4}$
	Nd-149		$3X10^{-3}$
Nickel (28)	Ni-65		$1x10^{-3}$
Niobium (Columbium) (41)	Nb-95		$1x10^{-3}$
	Nb-97		$9X10^{-3}$
Osmium (76)	Os-185		$7X10^{-4}$
	Os-191m		$3X10^{-2}$
	Os-191		$2X10^{-3}$
	Os-193		$6X10^{-4}$
Palladium (46)	Pd-103		$3X10^{-3}$
	Pd-109		$9X10^{-4}$
Phosphorus (15)	P-32		$2X10^{-4}$
Platinum (78)	Pt-191		$1x10^{-3}$
	Pt-193m		$1x10^{-2}$
	Pt-197m		$1x10^{-2}$
	Pt-197		$1x10^{-3}$
Potassium (19)	K-42		$3X10^{-3}$
Praseodymium (59)	Pr-142		$3X10^{-4}$
	Pr-143		$5X10^{-4}$
Promethium (61)	Pm-147		$2X10^{-3}$
	Pm-149		$4X10^{-4}$

[illegible]

[illegible]

Element (atomic number)	Isotope	Column I Gas concentration µCi/ml[1]	Column II Liquid and solid µCi/ml[2]
Rhenium (75)	Re-183		$6X10^{-3}$
	Re-186		$9X10^{-4}$
	Re-188		$6X10^{-4}$
Rhodium (45)	Rh-103m		$1x10^{-1}$
	Rh-105		$1x10^{-3}$
Rubidium (37)	Rb-86		$7X10^{-4}$
Ruthenium (44)	Ru-97		$4X10^{-3}$
	Ru-103		$8X10^{-4}$
	Ru-105		$1x10^{-3}$
	Ru-106		$1x10^{-4}$
Samarium (62)	Sm-153		$8X10^{-4}$
Scandium (21)	Sc-46		$4X10^{-4}$
	Sc-47		$9X10^{-4}$
	Sc-48		$3X10^{-4}$
Selenium (34)	Se-75		$3X10^{-3}$
Silicon (14)	Si-31		$9X10^{-3}$
Silver (47)	Ag-105		$1x10^{-3}$
	Ag-110m		$3X10^{-4}$
	Ag-111		$4X10^{-4}$
Sodium (11)	Na-24		$2X10^{-3}$
Strontium (38)	Sr-85		$1x10^{-3}$
	Sr-89		$1x10^{-4}$
	Sr-91		$7X10^{-4}$
	Sr-92		$7X10^{-4}$
Sulfur (16)	S-35	$9X10^{-8}$	$6X10^{-4}$
Tantalum (73)	Ta-182		$4X10^{-4}$
Technetium (43)	Tc-96m		$1x10^{-1}$
	Tc-96		$1x10^{-3}$
Tellurium (52)	Te-125m		$2X10^{-3}$
	Te-127m		$6X10^{-4}$
	Te-127		$3X10^{-3}$
	Te-129m		$3X10^{-4}$
	Te-131m		$6X10^{-4}$
	Te-132		$3X10^{-4}$
Terbium (65)	Tb-160		$4X10^{-4}$
Thallium (81)	Tl-200		$4X10^{-3}$
	Tl-201		$3X10^{-3}$
	Tl-202		$1x10^{-3}$
	Tl-204		$1x10^{-3}$
Thulium (69)	Tm-170		$5x10^{-4}$
	Tm-171		$5X10^{-3}$
Tin (50)	Sn-113		$9X10^{-4}$
	Sn-125		$2X10^{-4}$
Tungsten (Wolfram) (74)	W-181		$4x10^{-3}$
	W-187		$7X10^{-4}$
Vanadium (23)	V-48		$3X10^{-4}$
Xenon (54)	Xe-131m		$4X10^{-6}$
	Xe-133		$3X10^{-6}$
	Xe-135		$1x10^{-6}$
Ytterbium (70)	Yb-175		$1x10^{-3}$

[illegible]

[illegible]

Element (atomic number)	Isotope	Column I Gas concentration µCi/ml[1]	Column II Liquid and solid µCi/ml[2]
Yttrium (39)	Y-90		$2X10^{-4}$
	Y-91m		$3X10^{-2}$
	Y-91		$3X10^{-4}$
	Y-92		$6X10^{-4}$
	Y-93		$3X10^{-4}$
Zinc (30)	Zn-65		$1x10^{-3}$
	Zn-69m		$7X10^{-4}$
	Zn-69		$2X10^{-2}$
Zirconium (40)	Zr-95		$6X10^{-4}$
	Zr-97		$2X10^{-4}$
Beta and/or gamma emitting radioactive material not listed above with half-life less than 3 years.		$1x10^{-10}$	$1x10^{-6}$

NOTES:

1. Many radioisotopes disintegrate into isotopes which are also radioactive. In expressing the concentrations in Appendix A, the activity stated is that of the parent isotope and takes into account the daughters.

2. For purposes of Section C.2.2 where there is involved a combination of isotopes, the limit for the combination should be derived as follows: Determine for each isotope in the product the ratio between the concentration present in the product and the exempt concentration established in Appendix A for the specific isotope when not in combination. The sum of such ratios may not exceed "1" (i.e., unity).

EXAMPLE:

$$\frac{\text{Concentration of Isotope A in Product}}{\text{Exempt concentration of Isotope A}} + \frac{\text{Concentration of Isotope B in Product}}{\text{Exempt concentration of Isotope B}} \leq 1$$

3. To convert µCi/ml to SI units of megabecquerels per liter multiply the above values by 37.

EXAMPLE: Zirconium-97 ($2x10^{-4}$ µCi/ml multiplied by 37 is equivalent to 74 x 10^{-4} MBq/l).

---

[1] V. ... C. ... I ...

[2] C. ...

PART C

APPENDIX B

EXEMPT QUANTITIES

Radioactive Material	Microcuries
Antimony-122 (Sb-122)	100
Antimony-124 (Sb-124)	10
Antimony-125 (Sb-125)	10
Arsenic-73 (As-73)	100
Arsenic-74 (As-74)	10
Arsenic-76 (As-76)	10
Arsenic-77 (As-77)	100
Barium-131 (Ba-131)	10
Barium-133 (Ba-133)	10
Barium-140 (Ba-140)	10
Bismuth-207 (Bi-207)	10
Bismuth-210 (Bi-210)	1
Bromine-82 (Br-82)	10
Cadmium-109 (Cd-109)	10
Cadmium-115m (Cd-115m)	10
Cadmium-115 (Cd-115)	100
Calcium-45 (Ca-45)	10
Calcium-47 (Ca-47)	10
Carbon-11 (C-11)	10
Carbon-14 (C-14)	100
Cerium-139 (Ce-139)	1
Cerium-141 (Ce-141)	100
Cerium-143 (Ce-143)	100
Cerium-144 (Ce-144)	1
Cesium-129 (Cs-129)	100
Cesium-131 (Cs-131)	1,000
Cesium-134m (Cs-134m)	100
Cesium-134 (Cs-134)	1
Cesium-135 (Cs-135)	10
Cesium-136 (Cs-136)	10
Cesium-137 (Cs-137)	10
Chlorine-36 (Cl-36)	10
Chlorine-38 (Cl-38)	10
Chromium-51 (Cr-51)	1,000
Cobalt-56 (Co-56)	1
Cobalt-57 (Co-57)	100
Cobalt-58m (Co-58m)	10
Cobalt-58 (Co-58)	10
Cobalt-60 (Co-60)	1
Copper-64 (Cu-64)	100
Dysprosium-165 (Dy-165)	10
Dysprosium-166 (Dy-166)	100
Erbium-169 (Er-169)	100
Erbium-171 (Er-171)	100
Europium-152m (Eu-152m) [$T_{1/2}$=9.2h]	100
Europium-152 (Eu-152) [$T_{1/2}$=13 yr]	1
Europium-154 (Eu-154)	1
Europium-155 (Eu-155)	10
Fluorine-18 (F-18)	1,000
Gadolinium-153 (Gd-153)	10
Gadolinium-159 (Gd-159)	100
Gallium-67 (Ga-67)	100

Radioactive Material	Microcuries
Gallium-72 (Ga-72)	10
Germanium-68 (Ge-68)	10
Germanium-71 (Ge-71)	100
Gold-195 (Au-195)	10
Gold-198 (Au-198)	100
Gold-199 (Au-199)	100
Hafnium-181 (Hf-181)	10
Holmium-166 (Ho-166)	100
Hydrogen-3 (H-3)	1,000
Indium-111 (In-111)	100
Indium-113m (In-113m)	100
Indium-114m (In-114m)	10
Indium-115m (In-115m)	100
Indium-115 (In-115)	10
Iodine-123 (I-123)	100
Iodine-125 (I-125)	1
Iodine-126 (I-126)	1
Iodine-129 (I-129)	0.1
Iodine-131 (I-131)	1
Iodine-132 (I-132)	10
Iodine-133 (I-133)	1
Iodine-134 (I-134)	10
Iodine-135 (I-135)	10
Iridium-192 (Ir-192)	10
Iridium-194 (Ir-194)	100
Iron-52 (Fe-52)	10
Iron-55 (Fe-55)	100
Iron-59 (Fe-59)	10
Krypton-85 (Kr-85)	100
Krypton-87 (Kr-87)	10
Lanthanum-140 (La-140)	10
Lutetium-177 (Lu-177)	100
Manganese-52 (Mn-52)	10
Manganese-54 (Mn-54)	10
Manganese-56 (Mn-56)	10
Mercury-197m (Hg-197m)	100
Mercury-197 (Hg-197)	100
Mercury-203 (Hg-203)	10
Molybdenum-99 (Mo-99)	100
Neodymium-147 (Nd-147)	100
Neodymium-149 (Nd-149)	100
Nickel-59 (Ni-59)	100
Nickel-63 (Ni-63)	10
Nickel-65 (Ni-65)	100
Niobium-93m (Nb-93m)	10
Niobium-95 (Nb-95)	10
Niobium-97 (Nb-97)	10
Nitrogen-13 (N-13)	10
Osmium-185 (Os-185)	10
Osmium-191m (Os-191m)	100
Osmium-191 (Os-191)	100
Osmium-193 (Os-193)	100
Oxygen-15 (O-15)	10

Radioactive Material	Microcuries
Palladium-103 (Pd-103)	100
Palladium-109 (Pd-109)	100
Phosphorus-32 (P-32)	10
Platinum-191 (Pt-191)	100
Platinum-193m (Pt-193m)	100
Platinum-193 (Pt-193)	100
Platinum-197m (Pt-197m)	100
Platium-197 (Pt-197)	100
Polonium-210 (Po-210)	0.1
Potassium-42 (K-42)	10
Potassium-43 (K-43)	10
Praseodymium-142 (Pr-142)	100
Praseodymium-143 (Pr-143)	100
Promethium-147 (Pm-147)	10
Promethium-149 (Pm-149)	10
Rhenium-186 (Re-186)	100
Rhenium-188 (Re-188)	100
Rhodium-103m (Rh-103m)	100
Rhodium-105 (Rh-105)	100
Rubibium-81 (Rb-81)	10
Rubidium-86 (Rb-86)	10
Rubidium-87 (Rb-87)	10
Ruthenium-97 (Ru-97)	100
Ruthenium-103 (Ru-103)	10
Ruthenium-105 (Ru-105)	10
Ruthenium-106 (Ru-106)	1
Samarium-151 (Sm-151)	10
Samarium-153 (Sm-153)	100
Scandium-46 (Sc-46)	10
Scandium-47 (Sc-47)	100
Scandium-48 (Sc-48)	10
Selenium-75 (Se-75)	10
Silicon-31 (Si-31)	100
Silver-105 (Ag-105)	10
Silver-110m (Ag-110m)	1
Silver-111 (Ag-111)	100
Sodium-22 (Na-22)	10
Sodium-24 (Na-24)	10
Strontium-85 (Sr-85)	10
Strontium-89 (Sr-89)	1
Strontium-90 (Sr-90)	0.1
Strontium-91 (Sr-91)	10
Strontium-92 (Sr-92)	10
Sulphur-35 (S-35)	100
Tantalum-182 (Ta-182)	10
Technetium-96 (Tc-96)	10
Technetium-97m (Tc-97m)	100
Technetium-97 (Tc-97)	100
Technetium-99m (Tc-99m)	100
Technetium-99 (Tc-99)	10
Tellurium-125m (Te-125m)	10
Tellurium-127m (Te-127m)	10
Tellurium-127 (Te-127)	100
Tellurium-129m (Te-129m)	10
Tellurium-129 (Te-129)	100
Tellurium-131m (Te-131m)	10

Radioactive Material	Microcuries
Tellurium-132 (Te-132)	10
Terbium-160 (Tb-160)	10
Thallium-200 (Tl-200)	100
Thallium-201 (Tl-201)	100
Thallium-202 (Tl-202)	100
Thallium-204 (Tl-204)	10
Thulium-170 (Tm-170)	10
Thulium-171 (Tm-171)	10
Tin-113 (Sn-113)	10
Tin-125 (Sn-125)	10
Tungsten-181 (W-181)	10
Tungsten-185 (W-185)	10
Tungsten-187 (W-187)	100
Vanadium-48 (V-48)	10
Vanadium-49 (V-49)	1
Xenon-131m (Xe-131m)	1,000
Xenon-133 (Xe-133)	100
Xenon-135 (Xe-135)	100
Ytterbium-169 (Yb-169)	1
Ytterbium-175 (Yb-175)	100
Yttrium-87 (Y-87)	10
Yttrium-88 (Y-88)	10
Yttrium-90 (Y-90)	10
Yttrium-91 (Y-91)	10
Yttrium-92 (Y-92)	100
Yttrium-93 (Y-93)	100
Zinc-65 (Zn-65)	10
Zinc-69m (Zn-69m)	100
Zinc-69 (Zn-69)	1,000
Zirconium-93 (Zr-93)	10
Zirconium-95 (Zr-95)	10
Zirconium-97 (Zr-97)	10
Any radioactive material not listed above other than alpha emitting radioactive material	0.1

NOTES:

1. For purposes of C.2.2(b)(1) where there is involved a combination of isotopes in known amounts, the limit for the combination should be derived as follows: Determine, for each isotope in the combination, the ratio between the quantity present in the combination and the limit otherwise established for the specific isotope when not in combination. The sum of such ratios for all the isotopes in the combination may not exceed "1" (i.e., "unity).

EXAMPLE:

$$\frac{\text{Amt. of Isotope A possessed}}{\text{1000 x Appendix B quantity for Isotope A}} + \frac{\text{Amt. of Isotope B possessed}}{\text{1000 x Appendix B quantity for Isotope B}} \leq 1$$

2. To convert microcuries (µCi) to SI units of kilobecquerels (kBq), multiply the above values by 37.

EXAMPLE:

Zirconium-97 (10 µCi multiplied by 37 is equivalent to 370 kBq).

PART C

APPENDIX C

[RESERVED]

YYYYY

PART C

APPENDIX D

LIMITS FOR BROAD LICENSES (C.5.4)

Radioactive Material	Column I Curies	Column II Curies
Antimony-122	1	0.01
Antimony-124	1	0.01
Antimony-125	1	0.01
Arsenic-73	10	0.1
Arsenic-74	1	0.01
Arsenic-75	1	0.01
Arsenic-77	10	0.1
Barium-131	10	0.1
Barium-140	1	0.01
Beryllium-7	10	0.1
Bismuth-210	0.1	0.001
Bromine-82	10	0.1
Cadmium-109	1	0.01
Cadmium-115m	1	0.01
Cadmium-115	10	0.1
Calcium-45	1	0.01
Calcium-47	10	0.1
Carbon-14	100	1
Cerium-141	10	0.1
Cerium-143	10	0.1
Cerium-144	0.1	0.001
Cesium-131	100	1
Cesium-134m	100	1
Cesium-134	0.1	0.001
Cesium-135	1	0.01
Cesium-136	10	0.1
Cesium-137	0.1	0.001
Chlorine-36	1	0.01
Chlorine-38	100	1
Chromium-51	100	1
Cobalt-57	10	0.1
Cobalt-58m	100	1
Cobalt-58	1	0.01
Cobalt-60	0.1	0.001
Copper-64	10	0.1
Dysprosium-165	100	1
Dysprosium-166	10	0.1
Erbium-169	10	0.1
Erbium-171	10	0.1
Europium-152 [$T_{1/2}$=9.2h]	10	0.1
Europium-152 [$T_{1/2}$=13 y]	0.1	0.001
Europium-154	0.1	0.001
Europium-155	1	0.01
Fluorine-18	100	1
Gadolinium-153	1	0.01
Gadolinium-159	10	0.1
Gallium-72	10	0.1
Germanium-71	100	1

YYYYY

Radioactive Material	Column I Curies	Column II Curies
Gold-198	10	0.1
Gold-199	10	0.1
Hafnium-181	1	0.01
Holmium-166	10	0.1
Hydrogen-3	100	1
Indium-113m	100	1
Indium-114m	1	0.01
Indium-115m	100	1
Indium-115	1	0.01
Iodine-125	0.1	0.001
Iodine-126	0.1	0.001
Iodine-129	0.1	0.001
Iodine-131	0.1	0.001
Iodine-132	10	0.1
Iodine-133	1	0.01
Iodine-134	10	0.1
Iodine-135	1	0.01
Iridium-192	1	0.01
Iridium-194	10	0.1
Iron-55	10	0.1
Iron-59	1	0.01
Krypton-85	100	1
Krypton-87	10	0.1
Lanthanum-140	1	0.01
Lutetium-177	10	0.1
Manganese-52	1	0.01
Manganese-54	1	0.01
Manganese-56	10	0.1
Mercury-197m	10	0.1
Mercury-197	10	0.1
Mercury-203	1	0.01
Molybdenum-99	10	0.1
Neodymium-147	10	0.1
Neodymium-149	10	0.1
Nickel-59	10	0.1
Nickel-63	1	0.01
Nickel-65	10	0.1
Niobium-93m	1	0.01
Niobium-95	1	0.01
Niobium-97	100	1
Osmium-185	1	0.01
Osmium-191m	100	1
Osmium-191	10	0.1
Osmium-193	10	0.1
Palladium-103	10	0.1
Palladium-109	10	0.1
Phosphorus-32	1	0.01
Platinum-191	10	0.1
Platinum-193m	100	1
Platinum-193	10	0.1
Platinum-197m	100	1
Platinum-197	10	0.1
Polonium-210	0.01	0.0001

Radioactive Material	Column I Curies	Column II Curies
Potassium-42	1	0.01
Praseodymium-142	10	0.1
Praseodymium-143	10	0.1
Promethium-147	1	0.01
Promethium-149	10	0.1
Radium-226	0.01	0.0001
Rhenium-166	10	0.1
Rhenium-168	10	0.1
Rhodium-105	10	0.1
Rodium-103m	1,000	10
Rubidium-86	1	0.01
Rubidium-87	1	0.01
Ruthenium-97	100	1
Ruthenium-103	1	0.01
Ruthenium-105	10	0.1
Ruthenium-106	0.1	0.001
Samarium-151	1	0.01
Samarium-153	10	0.1
Scandium-46	1	0.01
Scandium-47	10	0.1
Scandium-48	1	0.01
Selenium-75	1	0.01
Silicon-31	10	0.1
Silver-105	1	0.01
Silver-110m	0.1	0.001
Silver-111	10	0.1
Sodium-22	0.1	0.001
Sodium-24	1	0.01
Strontium-85m	1,000	10
Strontium-85	1	0.01
Strontium-89	1	0.01
Strontium-90	0.01	0.0001
Strontium-91	10	0.1
Strontium-92	10	0.1
Sulphur-35	10	0.1
Tantalum-182	1	0.01
Technetium-96	10	0.1
Technetium-97m	10	0.1
Technetium-97	10	0.1
Technetium-99m	100	1
Technetium-99	1	0.01
Tellurium-125m	1	0.01
Tellurium-127m	1	0.01
Tellurium-127	10	0.1
Tellurium-129m	1	0.01
Tellurium-129	100	1
Tellurium-131m	10	0.1
Tellurium-132	1	0.01
Terbium-160	1	0.01
Thallium-200	10	0.1
Thallium-201	10	0.1
Thallium-202	10	0.1
Thallium-204	1	0.01

Radioactive Material	Column I Curies	Column II Curies
Thulium-170	1	0.01
Thulium-171	1	0.01
Tin-113	1	0.01
Tin-125	1	0.01
Tungsten-181	1	0.01
Tungsten-185	1	0.01
Tungsten-187	10	0.1
Vanadium-48	1	0.01
Xenon-131m	1,000	10
Xenon-133	100	1
Xenon-135	100	1
Ytterbium-175	10	0.1
Yttrium-90	1	0.01
Yttrium-91	1	0.01
Yttrium-92	10	0.1
Yttrium-93	1	0.01
Zinc-65	1	0.01
Zinc-69m	10	0.1
Zinc-69	100	1
Zirconium-93	1	0.01
Zirconium-95	1	0.01
Zirconium-97	1	0.01
Any radioactive material other than source material, special nuclear material, or alpha emitting radioactive material not listed above	0.1	0.001

NOTE:

To convert curies (Ci) to SI units of gigabecquerels (GBq), multiply the above values by 37.

EXAMPLE:

Zirconium-97 (Col. II) (0.01 Ci multiplied by 37 is equivalent to 0.37 GBq).

PART C

APPENDIX E

CRITERIA RELATING TO USE OF FINANCIAL TESTS AND SELF GUARANTEES FOR PROVIDING REASONABLE ASSURANCE OF FUNDS FOR DECOMMISSIONING

I. INTRODUCTION

An applicant or licensee may provide reasonable assurance of the availability of funds for decommissioning based on furnishing its own guarantee that funds will be available for decommissioning costs and on a demonstration that the company passes the financial test of Section II of this Appendix The terms of the self-guarantee are in Section III of this Appendix. This Appendix establishes criteria for passing the financial test for the self-guarantee and establishes the terms for a self-guarantee.

II. FINANCIAL TEST

(A) To pass the financial test, a company must meet all of the following criteria:

(1) A current rating for its most recent bond issuance of AAA, AA or A as issued by Standard and Poor's or Aaa, Aa or A as issued by Moody's; and

(2) Tangible net worth each at least ten times the current decommissioning cost estimates (or current amount required if certification is used) for all decommissioning activities for which the company is responsible as self-guaranteeing licensee and as parent-guarantor; and

(3) Assets located in the United States amounting to at least 90 percent of total assets or at least ten times the current decommissioning cost estimates (or the current amount required if certification is used) for all decommissioning activities for which the company is responsible as self-guaranteeing licensee and as parent-guarantor.

(B) To pass the financial test, a company must meet all of the following additional requirements:

(1) The company must have at least one class of equity securities registered under the Securities Exchange Act of 1934;

(2) The company's independent certified public accountant must have compared the data used by the company in the financial test, which is derived from the independently audited, year end financial statements for the latest fiscal year, with the amounts in such financial statement. In connection with that procedure the licensee shall inform the Agency within 90 days of any matters coming to the auditor's attention which cause the auditor to believe that the data specified in the financial test should be adjusted and that the company no longer passes the test.

(3) After the initial financial test, the company must repeat the passage of the test within 90 days after the close of each succeeding fiscal year.

(C) If the licensee no longer meets the requirements of Section II.A. of this Appendix, the licensee must send immediate notice to the Agency of its intent to establish alternate financial assurance as specified in the Agency's regulations within 120 days of such notice.

III. COMPANY SELF-GUARANTEE

The terms of a self-guarantee which an applicant or licensee furnishes must provide that:

(A) The guarantee will remain in force unless the licensee sends notice of cancellation by certified mail to the Agency. Cancellation may not occur, however, during the 120 days beginning on the date of receipt of the notice of cancellation by the Agency, as evidenced by the return receipt.

(B) The licensee shall provide alternate financial assurance as specified in the Agency's regulations within 90 days after receipt by the Agency of the notice of cancellation of the guarantee.

III.(C)

(C) The guarantee and financial test provisions must remain in effect until the Agency has terminated the license or until another financial assurance method acceptable to the Agency has been put in effect by the licensee.

(D) The licensee will promptly forward to the Agency and the licensee's independent auditor all reports covering the latest fiscal year filed by the licensee with the Securities and Exchange commission pursuant to the requirements of Section 13 of the Securities and Exchange Act of 1934.

(E) If, at any time, the licensee's most recent bond issuance ceases to be rated in any category of "A" or above by either Standard and Poors or Moodys, the licensee will provide notice in writing of such fact to the Agency within 20 days after publication of the change by the rating service. If the licensee's most recent bond issuance ceases to be rated in any category of "A" or above by both Standard and Poors and Moodys, the licensee no longer meets the requirements of Section II.A. of this Appendix.

(F) The applicant or licensee must provide to the Agency a written guarantee (a written commitment by a corporate officer) which states that the licensee will fund and carry out the required decommissioning activities or, upon issuance of an order by the Agency, the licensee will set up and fund a trust in the amount of the current cost estimates for decommissioning.

[REMAINDER OF PAGE INTENTIONALLY LEFT BLANK]

PART C - APPENDIX F

QUANTITIES OF RADIOACTIVE MATERIALS REQUIRING CONSIDERATION OF THE NEED FOR AN EMERGENCY PLAN FOR RESPONDING TO A RELEASE

Radioactive Material	Release Fraction	Quantity (Curies)
Actinium-228	0.001	4,000
Americium-241	.001	2
Americium-242	.001	2
Americium-243	.001	2
Antimony-124	.01	4,000
Antimony-126	.01	6,000
Barium-133	.01	10,000
Barium-140	.01	30,000
Bismuth-207	.01	5000
Bismuth-210	.01	600
Cadmium-109	.01	1,000
Cadmium-113	.01	80
Calcium-45	.01	20,000
Californium-252	.001	9[1]
Carbon-14 (Non CO_2)	.01	50,000
Cerium-141	.01	10,000
Cerium-144	.01	300
Cesium-134	.01	2,000
Cesium-137	.01	3,000
Chlorine-36	.5	100
Chromium-51	.01	300,000
Cobalt-60	.001	5,000
Copper-64	.01	200,000
Curium-242	.001	60
Curium-243	.001	3
Curium-244	.001	4
Curium-245	.001	2
Europium-152	.01	500
Europium-154	.01	400
Europium-155	.01	3,000
Germanium-68	.01	2,000
Gadolinium-153	.01	5,000
Gold-198	.01	30,000
Hafnium-172	.01	400
Hafnium-181	.01	7,000
Holmium-166m	.01	100
Hydrogen-3	.5	20,000
Iodine-125	.5	10
Iodine-131	.5	10
Indium-114m	.01	1,000
Iridium-192	.001	40,000
Iron-55	.01	40,000
Iron-59	.01	7,000
Krypton-85	1.0	6,000,000
Lead-210	.01	8
Manganese-56	.01	60,000
Mercury-203	.01	10,000
Molybdenum-99	.01	30,000
Neptunium-237	.001	2
Nickel-63	.01	20,000
Niobium-94	.01	300

[1] E. . .. .

Radioactive Material	Release Fraction	Quantity (Curies)
Phosphorus-32	.5	100
Phosphorus-33	.5	1,000
Polonium-210	.01	10
Potassium-42	.01	9,000
Promethium-145	.01	4,000
Promethium-147	.01	4,000
Ruthenium-106	.01	200
Samarium-151	.01	4,000
Scandium-46	.01	3,000
Selenium-75	.01	10,000
Silver-110m	.01	1,000
Sodium-22	.01	9,000
Sodium-24	.01	10,000
Strontium-89	.01	3,000
Strontium-90	.01	90
Sulphur-35	.5	900
Technetium-99	.01	10,000
Technetium-99m	.01	400,000
Tellurium-127m	.01	5,000
Tellurium-129m	.01	5,000
Terbium-160	.01	4,000
Thulium-170	.01	4,000
Tin-113	.01	10,000
Tin-123	.01	3,000
Tin-126	.01	1,000
Titanium-44	.01	100
Vanadium-48	.01	7,000
Xenon-133	1.0	900,000
Yttrium-91	.01	2,000
Zinc-65	.01	5,000
Zirconium-93	.01	400
Zirconium-95	.01	5,000
Any other beta-gamma emitter	.01	10,000
Mixed fission products	.01	1,000
Mixed corrosion products	.01	10,000
Contaminated equipment, beta-gamma	10,000	. 0 0 1
Irradiated material, any form other than solid noncombustible	.01	1,000
Irradiated material, solid noncombustible	.001	10,000
Mixed radioactive waste, beta-gamma	.01	1,000
Packaged mixed waste, beta-gamma[2]	.001	10,000
Any other alpha emitter	.001	2
Contaminated equipment, alpha	.0001	20
Packaged waste, alpha[2]	.0001	20
Combinations of radioactive materials listed above[3]		

[illegible] T[illegible]

[illegible] F[illegible]

RULES AND REGULATIONS FOR THE CONTROL OF RADIATION

(R23-1.3-RAD)

PART D

RADIATION SAFETY REQUIREMENTS FOR PARTICLE ACCELERATORS

JUNE 1978

As Amended:

June 1981
October 1984
February 1990 (E)
August 1991
February 1994
June 1999

PART D
RADIATION SAFETY REQUIREMENTS FOR PARTICLE ACCELERATORS

D.1 PURPOSE AND SCOPE

D.1.1 This part establishes procedures for the registration (or licensing) and the use of particle accelerators intended for other than healing arts use. Requirements for registration and use of particle accelerators for healing arts use are contained in Part H of these regulations.

D.1.2 In addition to the requirements of this part, all registrants are subject to the requirements of Parts A and B. Registrants engaged in industrial radiographic operations are subject to the requirements of Part E. Registrants (or licensees) whose operations result in the production of radioactive material are also subject to the requirements of Part C of these regulations.

D.2 REGISTRATION PROCEDURE

D.2.1 **Registration (or Licensing) Requirement.** No person shall receive, possess, use, transfer, own, or acquire a particle accelerator except as authorized in a registration (or license) issued pursuant to these regulations or as otherwise provided for in these regulations. The general procedures for registration (or licensing) of particle accelerator facilities are included in Part B (or C) of these regulations.

D.2.2 **General Requirements for the Issuance of a Registration (or License) for Particle Accelerators.**

In addition to the requirement of Part B (or C), a registration (or licensing) application for use of a particle accelerator will be approved only if the Agency determines that:

(a) The applicant is qualified by reason of training and experience to use the accelerator in question for the purpose requested in accordance with this part and Part A of these regulations in such a manner as to minimize danger to public health and safety or property;

(b) The applicant's proposed equipment, facilities, operating and emergency procedures are adequate to protect health and minimize danger to public health and safety or property;

(c) The issuance of the registration (or license) will not be inimical to the health and safety of the public;

(d) The applicant has appointed a radiation safety officer;

(e) The applicant and/or his staff has substantial experience in the use of particle accelerators for the intended uses;

(f) The applicant has established a radiation safety committee to approve, in advance, proposals for uses of particle accelerators, whenever deemed necessary by the Agency; and

(g) The applicant has an adequate training program for particle accelerator operators.

D.2.3 **[RESERVED]**.

D.3 RADIATION SAFETY REQUIREMENTS FOR THE USE OF PARTICLE ACCELERATORS

D.3.1 **[RESERVED].**

D.3.2 **Limitations.**

(a) No registrant (or licensee) shall permit any person to act as a particle accelerator operator until such person:

(1) Has been instructed in radiation safety and shall have demonstrated an understanding thereof;

(2) Has received copies of and instructions in this part and the applicable requirements of Part A, pertinent registration (or license) conditions and the registrant's (or licensee's) operating and emergency procedures, and shall have demonstrated understanding thereof; and

(3) Has demonstrated competence to use the particle accelerator, related equipment, and survey instruments which will be employed in his assignment.

(b) Either the radiation safety committee or the radiation safety officer shall have the authority to terminate the operations at a particle accelerator facility if such action is deemed necessary to minimize danger to public health and safety or property.

D.3.3 **Shielding and Safety Design Requirements.**

(a) A qualified expert, registered with the Agency, shall be consulted in the design of a particle accelerator installation and called upon to perform a radiation survey when the accelerator is first capable of producing radiation.

(b) Each particle accelerator installation shall be provided with such primary and/or secondary barriers as are necessary to assure compliance with Sections A.2.3 and A.2.11 of these regulations.

D.3.4 **Particle Accelerator Controls and Interlock System.**

(a) Instrumentation, readouts and controls on the particle accelerator control console shall be clearly identified and easily discernible.

(b) Each entrance into a target room or other high radiation area shall be provided with a safety interlock that shuts down the machine under conditions of barrier penetration.

(c) When a safety interlock system has been tripped, it shall only be possible to resume operation of the accelerator by manually resetting controls at the position where the safety interlock has been tripped, and lastly at the main control console.

(d) Each safety interlock shall be on a circuit which shall allow its operation independently of all other safety interlocks.

(e) All safety interlocks shall be fail safe (i.e., designed so that any defect or component failure in the safety interlock system prevents operation of the accelerator).

(f) A scram button or other emergency power cutoff switch shall be located and easily identifiable in all high radiation areas. Such a cutoff switch shall include a manual reset so that the accelerator cannot be restarted from the accelerator control console without resetting the cutoff switch.

D.3.5 **Warning Devices.**

(a) All locations designated as high radiation areas, and entrances to such locations shall be equipped with easily observable warning lights that operate when, and only when, radiation is being produced.

(b) Except in facilities designed for human exposure, each high radiation area shall have an audible warning device which shall be activated for 15 seconds prior to the possible creation of such high radiation area. Such warning device shall be clearly discernible in all high radiation areas.

D.3.5(c)

(c) Barriers, temporary or otherwise, and pathways leading to high radiation areas shall be identified in accordance with Section A.3.12 of these regulations.

D.3.6 **Operating Procedures.**

(a) Particle accelerators, when not in operation, shall be secured to prevent unauthorized use.

(b) Only a switch on the accelerator control console shall be routinely used to run the accelerator beam on and off. The safety interlock system shall not be used to turn off the accelerator beam except in an emergency.

(c) All safety and warning devices, including interlocks, shall be checked for proper operability at intervals not to exceed three months. Results of such tests shall be maintained for inspection at the accelerator facility.

(d) Electrical circuit diagrams of the accelerator, and the associated interlock systems, shall be kept current and maintained for inspection by the Agency and available to the operator at each accelerator facility.

(e) If, for any reason, it is necessary to intentionally bypass a safety interlock or interlocks, such action shall be:

(1) Authorized by the radiation safety committee and/or radiation safety officer;

(2) Recorded in a permanent log and a notice posted at the accelerator control console; and

(3) Terminated as soon as possible.

(f) A copy of the current operating and the emergency procedures shall be maintained at the accelerator control panel.

D.3.7 **Radiation Monitoring Requirements.**

(a) There shall be available at each particle accelerator facility, appropriate portable monitoring equipment which is operable and has been calibrated for the appropriate radiations being produced at the facility. Such equipment shall be tested regularly and prior to use, and calibrated at intervals not to exceed one year, and after each servicing and repair which could affect the calibration.

(b) A radiation protection survey shall be performed and documented by a qualified expert registered with the Agency when changes have been made in shielding, operation, equipment, or occupancy of adjacent areas.

(c) Radiation levels in all high radiation areas shall be continuously monitored. The monitoring devices shall be electrically independent of the accelerator control and safety interlock systems and capable of providing a readout at the control panel.

(d) All area monitors shall be calibrated quarterly.

(e) Whenever applicable, periodic surveys shall be made to determine the amount of airborne particulate radioactivity present in areas of airborne hazards.

(f) Whenever applicable, periodic smear surveys shall be made to determine the degree of contamination in target and other pertinent areas.

(g) All area surveys shall be made in accordance with the written procedures established by a qualified expert, or the radiation safety officer of the particle accelerator facility.

(h) Records of all radiation protection surveys, calibration results, instrumentation tests, and smear results shall be kept current and on file at each accelerator facility.

D.3.8 **Ventilation Systems.**

(a) Ventilation systems shall be provided to ensure that personnel entering any area where airborne radioactivity may be produced will not be exposed to airborne radioactive material in excess of those limits specified in Part A, Appendix A, Table I of these regulations.

(b) A registrant (or licensee), as required by Section A.2.11, shall not vent, release or otherwise discharge airborne radioactive material to an uncontrolled area which exceed the limits specified in Part A, Appendix A, Table II, except as authorized pursuant to Section A.4.2 or Paragraph A.2.11(c) of these regulations. For purposes of this paragraph, concentrations may be averaged over a period not greater than one year. Every reasonable effort should be made to maintain releases of radioactive material to uncontrolled areas, as far below these limits as practicable.

D.4 [RESERVED]

[REMAINDER OF PAGE INTENTIONALLY LEFT BLANK]

RULES AND REGULATIONS FOR THE CONTROL OF RADIATION

(R23-1.3-RAD)

PART E

RADIATION SAFETY REQUIREMENTS FOR INDUSTRIAL RADIOGRAPHIC OR WIRELINE SERVICE OPERATIONS AND ANALYTICAL X-RAY EQUIPMENT

JUNE 1978

As Amended:

June 1981
October 1984
August 1991
February 1994
June 1999

PART E
RADIATION SAFETY REQUIREMENTS FOR INDUSTRIAL RADIOGRAPHIC OR WIRELINE SERVICE OPERATIONS AND ANALYTICAL X-RAY EQUIPMENT

E.1 PURPOSE

The regulations in this part establish radiation safety requirements for persons utilizing sources of radiation for industrial radiography or wireline service operations (including mineral logging, radioactive markers and subsurface tracer studies), and provides special requirements for analytical and research and development X-ray equipment. The requirements of this part are in addition to and not in substitution for the other requirements of these regulations.

E.2 INDUSTRIAL RADIOGRAPHY

E.2.1 **Scope and Exemptions.**

(a) **Scope.** Except as provided by Paragraph E.2.1(b), the regulations in this subpart apply to all licensees or registrants who use sources of radiation for industrial radiography; provided, however, that nothing in this subpart shall apply to the use of sources of radiation in the healing arts.

(b) **Exemptions.** Uses of certified and certifiable cabinet x-ray systems are exempt from the requirements of this part except for the following:

(1) For certified and certifiable cabinet x-ray systems, including those designed to allow admittance of individuals:

(i) No registrant shall permit any individual to operate a cabinet x-ray system until the individual has received a copy of and instruction in the operating procedures for the unit. Records that demonstrate compliance with this subparagraph shall be maintained for Agency inspection until disposal is authorized by the Agency.

(ii) Tests for proper operation of interlocks must be conducted and recorded at intervals not to exceed six months. Records of these tests shall be maintained for Agency inspection until disposal is authorized by the Agency.

(iii) The registrant shall perform an evaluation of the radiation dose limits to determine compliance with D.301a., b., and c. of these regulations, and 21 CFR 1020.40, Cabinet X-Ray Systems (39 Federal Register 12986, April 10, 1974), at intervals not to exceed one year. Records of these evaluations shall be maintained for Agency inspection for two years after the evaluation.

(2) Certified cabinet x-ray systems shall be maintained in compliance with 21 CFR 1020.40, Cabinet X-Ray Systems (39 Federal Register 12986, April 10, 1974), and no modification shall be made to the system unless prior Agency approval has been granted.

E.2.2 **Limits on External Levels of Radiation from Storage Containers and Source Changers.** The maximum exposure rate limits for storage containers and source changers are 2 millisieverts (200 millirem) per hour at any exterior surface, and 0.1 millisieverts (10 millirem) per hour at 1 meter from any exterior surface with the sealed source in the shielded position.

E.2.3 **Locking of Sources of Radiation, Storage Containers, and Source Changers.**

(a) Each radiographic exposure device shall have a lock or outer locked container designed to prevent unauthorized removal of the sealed source from its shielded position. The exposure device and/or its container shall be kept locked (and if a keyed lock, with the key removed at all times) when not under the direct surveillance of a radiographer or a radiographer's assistant except at permanent radiographic installations as stated in E.2.13. In addition, during radiographic operations the sealed source assembly shall be secured in the shielded position each time the

source is returned to that position.

E.2.3(b)

(b) Each sealed source storage container and source changer shall have a lock or outer locked container designed to prevent unauthorized or accidental removal of the sealed source from its shielded position. Storage containers and source changers shall be kept locked (and if a keyed lock, with the key removed at all times) when containing sealed sources except when under the direct surveillance of a radiographer or a radiographer's assistant.

(c) The control panel of each radiation machine shall be equipped with a lock that will prevent the unauthorized use of an x-ray system or the accidental production of radiation. The radiation machine shall be kept locked and the key removed at all times except when under the direct visual surveillance of a radiographer or a radiographer's assistant.

E.2.4 **Labeling, Storage, and Transportation.**

(a) The licensee may not use a source changer or a container to store radioactive material unless the source changer or the storage container has securely attached to it a durable, legible, and clearly visible label bearing the standard trefoil radiation caution symbol conventional colors (i.e., magenta, purple or black on a yellow background) having a minimum diameter of 25 mm, and the wording:

CAUTION[1]
RADIOACTIVE MATERIAL
NOTIFY CIVIL AUTHORITIES (or "NAME OF COMPANY")

(b) The licensee may not transport radioactive material unless the material is packaged, and the package is labeled, marked, and accompanied with appropriate shipping papers in accordance with regulations set out in 10 CFR 71.

(c) Radiographic exposure devices, source changers, storage containers, and radiation machines must be physically secured to prevent tampering or removal by unauthorized personnel. The licensee shall store radioactive material in a manner which will minimize danger from explosion or fire.

(d) The licensee shall lock and physically secure the transport package containing radioactive material in the transporting vehicle to prevent accidental loss, tampering, or unauthorized removal of the radioactive material from the vehicle.

(e) The licensee's or registrant's name and city or town where the main business office is located shall be prominently displayed with a durable, clearly visible label(s) on both sides of all vehicles used to transport radioactive material or radiation machines for temporary job site use.

E.2.5 **Radiation Survey Instruments.**

(a) The licensee or registrant shall keep sufficient calibrated and operable radiation survey instruments at each location where sources of radiation are present to make the radiation surveys required by this subpart and A.3.2 of these regulations. Instrumentation required by this section shall be capable of measuring a range from 0.02 millisieverts (2 millirems) per hour through 0.01 sievert (1 rem) per hour.

(b) The licensee or registrant shall have each radiation survey instrument required under paragraph (a) of this section calibrated:

(1) At energies appropriate for use and at intervals not to exceed 6 months and after instrument servicing, except for battery changes;

(2) Such that an accuracy within plus or minus 20 percent of the true radiation dose rate can be demonstrated at each point checked; and

---

[1] . . .DAN. ER.

(3) (i) For linear scale instruments, at two points located approximately one-third and two-thirds of full-scale on each scale;

YYY

(ii) For logarithmic scale instruments, at mid-range of each decade, and at two points of at least one decade; and

(iii) For digital instruments, at 3 points between 0.02 and 10 millisieverts (2 and 1000 millirems) per hour.

(c) The licensee or registrant shall maintain records of the results of the instrument calibrations in accordance with E.2.25.

E.2.6 **Leak Testing and Replacement of Sealed Sources.**

(a) The replacement of any sealed source fastened to or contained in a radiographic exposure device and leak testing of any sealed source shall be performed only by persons specifically authorized to do so by the Agency, the U.S. Nuclear Regulatory Commission, or another Agreement State.

(b) The opening, repair or modification of any sealed source shall be performed only by persons specifically authorized to do so by the Agency, the U.S. Nuclear Regulatory Commission, or another Agreement State.

(c) Testing and record keeping requirements.

(1) Each licensee who uses a sealed source shall have the source tested for leakage at intervals not to exceed 6 months. The leak testing of the source shall be performed using a method approved by the Agency, the U.S. Nuclear Regulatory Commission, or another Agreement State. The wipe sample should be taken from the nearest accessible point to the sealed source where contamination might accumulate. The wipe sample shall be analyzed for radioactive contamination. The analysis shall be capable of detecting the presence of 185 Bq (0.005 µCi) of radioactive material on the test sample and shall be performed by a person specifically authorized by the Agency, the U.S. Nuclear Regulatory Commission, or another Agreement State to perform the analysis.

(2) The licensee shall maintain records of the leak tests in accordance with E.2.26.

(3) Unless a sealed source is accompanied by a certificate from the transferor that shows that it has been leak tested within 6 months before the transfer, it may not be used by the licensee until tested for leakage. Sealed sources that are in storage and not in use do not require leak testing, but shall be tested before use or transfer to another person if the interval of storage exceeds 6 months.

(d) Any test conducted pursuant to paragraphs (a) and (c) of this section which reveals the presence of 185 Bq (0.005 µCi) or more of removable radioactive material shall be considered evidence that the sealed source is leaking. The licensee shall immediately withdraw the equipment involved from use and shall cause it to be decontaminated and repaired or to be disposed of, in accordance with regulations of the Agency. Within 5 days after obtaining results of the test, the licensee shall file a report with the Agency describing the equipment involved, the test results, and the corrective action taken.

(e) Each exposure device using depleted uranium (DU) shielding and an" S" tube configuration shall be tested for DU contamination at intervals not to exceed 12 months. The analysis shall be capable of detecting the presence of 185 Bq (0.005 µCi) of radioactive material on the test sample and shall be performed by a person specifically authorized by the Agency, the U.S. Nuclear Regulatory Commission or another Agreement State to perform the analysis. Should such testing reveal the presence of 185 Bq (0.005 µCi) or more of removable DU contamination, the exposure device shall be removed from use until an evaluation of the wear of the S-tube has been made. Should the evaluation reveal that the S-tube is worn through, the device may not be used again. DU shielded devices do not have to be tested for DU contamination while in storage and not in use. Before using or transferring such a device however the device shall be tested for DU contamination, if the interval of storage exceeds 12 months. A record of the DU leak-test shall be made in accordance with E.2.26.

E.2.7 **Quarterly Inventory.**

(a) Each licensee shall conduct a quarterly physical inventory to account for all sources of radiation and for devices containing depleted uranium received and possessed under this license.

E.2.7(b)

(b) The licensee or registrant shall maintain records of the quarterly inventory in accordance with E.2.27.

E.2.8 **Utilization Logs.**

(a) Each licensee or registrant shall maintain utilization logs showing for each source of radiation the following information:

(1) A description, including the make, model and serial number of the radiation machine or the radiographic exposure device, transport or storage container in which the sealed source is located;

(2) The identity or signature of the radiographer to whom assigned;

(3) Locations where used and dates of use, including the dates removed and returned to storage; and

(4) For permanent radiographic installations, the dates each radiation machine is energized.

(b) The licensee or registrant shall retain the logs required by paragraph (a) of this section for 3 years after the log is made.

E.2.9 **Inspection and Maintenance of Radiation Machines, Radiographic Exposure Devices, Transport and Storage Containers, Associated Equipment, Source Changers, and Survey Instruments.**

(a) Each licensee or registrant shall perform visual and operability checks on survey meters, radiation machines, radiographic exposure devices, transport and storage containers, associated equipment, and source changers before each day's use, or work shift, to ensure that:

(1) The equipment is in good working condition;

(2) The sources are adequately shielded; and

(3) Required labeling is present.

(b) Survey instrument operability must be performed using check sources or other appropriate means. If equipment problems are found, the equipment must be removed from service until repaired.

(c) Each licensee or registrant shall have written procedures for and perform:

(1) Inspection and routine maintenance of radiation machines, radiographic exposure devices, source changers, associated equipment, transport and storage containers and survey instruments at intervals not to exceed 3 months or before the first use thereafter to ensure the proper functioning of components important to safety. Replacement components shall meet design specifications. If equipment problems are found, the equipment must be removed from service until repaired.

(2) Inspection and maintenance necessary to maintain the Type B packaging used to transport radioactive materials. The inspection and maintenance program must include procedures to assure that Type B packages are shipped and maintained in accordance with the certificate of compliance or other approval.

(d) Records of equipment problems and of any maintenance performed under this section must be made in accordance with E.2.28.

E.2.10 **Training and Testing.**

(a) The licensee or registrant shall not permit any individual to act as a radiographer until the individual:

(1) Has received at least 40 hours of training in the subjects outlined in Paragraph (g) of this section, in addition to on-the-job training consisting of hands-on experience under the supervision of a radiographer and is certified through a radiographer certification program by a certifying entity in accordance with the criteria specified in Appendix A to Part E. The on-the-job training shall include a minimum of 2 months (320 hours) of active participation in the performance of industrial radiography utilizing radioactive material and/or 1 month (160 hours) of active participation in the performance of industrial radiography utilizing radiation machines. Individuals performing industrial radiography utilizing radioactive materials and radiation machines must complete both segments of the on the job training (3 months or 480 hours); or

(2) The licensee or registrant may, until 27 June 2000, allow an individual who has not met the requirement of paragraph (a)(1) of this section, to act as a radiographer after the individual has received at least 40 hours of training in the subjects outlined in E.17g. and demonstrated an understanding of these subjects by successful completion of a written examination that was previously submitted to and approved by the Agency, the Nuclear Regulatory Commission, or another Agreement State, in addition to on the job training consisting of hands-on experience under the supervision of a radiographer. The on the job training shall include a minimum of 2 months (320 hours) of active participation in the performance of industrial radiography utilizing radioactive material and/or 1 month (160 hours) of active participation in the performance of industrial radiography utilizing radiation machines. Individuals performing industrial radiography utilizing radioactive materials and radiation machines must complete both segments of the on the job training (3 months or 480 hours).

(b) In addition, the licensee or registrant shall not permit any individual to act as a radiographer until the individual:

(1) Has received copies of and instruction in RCA regulations as contained in this part and applicable sections of Parts A and C, in applicable DOT regulations as referenced in 10 CFR 71, in the license(s) and/ or certificate(s) of registration under which the radiographer will perform industrial radiography, and the licensee's or registrant's operating and emergency procedures.

(2) Has demonstrated understanding of the items in subparagraph (b)(1) of this section by successful completion of a written or oral examination.

(3) Has received training in the use of the registrant's radiation machines or the licensee's radiographic exposure devices, sealed sources, in the daily inspection of devices and associated equipment, and in the use of radiation survey instruments; and

(4) Has demonstrated understanding of the use of the equipment described in subparagraph (b)(3) of this section by successful completion of a practical examination.

(c) The licensee or registrant shall not permit any individual to act as a radiographer's assistant until the individual:

(1) Has received copies of and instruction in RCA regulations as contained in this part and applicable sections of Parts A and C, in applicable DOT regulations as referenced in 10 CFR 71, license(s) and/or certificate(s) of registration under which the radiographer's assistant will perform industrial radiography, and the licensee's or registrant's operating and emergency procedures;

(2) Has demonstrated an understanding of items in subparagraph (b)(1) of this section by successful completion of a written or oral examination;

(3) Has received training in the use of the registrant’s radiation machines, or the licensee's radiographic exposure devices, sealed sources, in the daily inspection of devices and associated equipment, and in the use of radiation survey instruments;

(4) Has demonstrated understanding of the use of the equipment described in subparagraph (b)(1) of this section by successful completion of a practical examination.

(d) The licensee or registrant shall provide annual refresher safety training for each radiographer and radiographer's assistant at intervals not to exceed 12 months.

(e) Except as provided in paragraph (e)(4), the RSO or designee shall conduct an inspection program of the job performance of each radiographer and radiographer's assistant to ensure that the Agency's regulations, license and/or certificate of registration requirements, and the applicant's operating and emergency procedures are followed. The inspection program shall:

(1) Include observation of the performance of each radiographer and radiographer's assistant during an actual industrial radiographic operation, at intervals not to exceed 6 months; and

(2) Provide that, if a radiographer or a radiographer's assistant has not participated in an industrial radiographic operation for more than 6 months since the last inspection, the radiographer must demonstrate knowledge of the training requirements of E.2.10(b)(3) and the radiographer's assistant must re-demonstrate knowledge of the training requirements of E.2.10(c)(2) by a practical examination before these individuals can next participate in a radiographic operation.

(3) The Agency may consider alternatives in those situations where the individual serves as both radiographer and RSO.

(4) In those operations where a single individual serves as both radiographer and RSO, and performs all radiography operations, an inspection program is not required.

(f) The licensee or registrant shall maintain records of the above training to include certification documents, written and practical examinations, refresher safety training and inspections of job performance in accordance with E.2.30.

(g) The licensee or registrant shall include the following subjects required in paragraph (a) of this section:

(1) Fundamentals of radiation safety including:

(i) Characteristics of gamma and X-radiation;

(ii) Units of radiation dose and quantity of radioactivity;

(iii) Hazards of exposure to radiation;

(iv) Levels of radiation from sources of radiation; and

(v) Methods of controlling radiation dose (time, distance, and shielding);

(2) Radiation detection instruments including:

(i) Use, operation, calibration, and limitations of radiation survey instruments;

(ii) Survey techniques; and

(iii) Use of personnel monitoring equipment.

(3) Equipment to be used including:

(i) Operation and control of radiographic exposure equipment, remote handling equipment, and storage containers, including pictures or models of source assemblies (pigtails);

(ii) Operation and control of radiation machines;

(iii) Storage, control, and disposal of sources of radiation; and

(iv) Inspection and maintenance of equipment.

(4) The requirements of pertinent Agency and Federal regulations; and

(5) Case histories of accidents in radiography.

E.2.10(h)

(h) Licensees and registrants will have until 27 June 2000 to comply with the certification requirements specified in paragraph (a)(1) of this section. Records of radiographer certification maintained in accordance with E.2.30(a) provide appropriate affirmation of certification requirements specified in paragraph (a)(1) of this section.

E.2.11 **Operating and Emergency Procedures.**

(a) The licensee's or registrant's operating and emergency procedures shall include, as a minimum, instructions in the following:

(1) Appropriate handling and use of sources of radiation so that no person is likely to be exposed to radiation doses in excess of the limits established in Subpart A.2 Standards for Protection Against Radiation;

(2) Methods and occasions for conducting radiation surveys;

(3) Methods for posting and controlling access to radiographic areas;

(4) Methods and occasions for locking and securing sources of radiation;

(5) Personnel monitoring and the use of personnel monitoring equipment;

(6) Transporting equipment to field locations, including packing of radiographic exposure devices and storage containers in the vehicles, placarding of vehicles when needed, and control of the equipment during transportation (refer to 49 CFR Parts 171-173);

(7) The inspection, maintenance and operability checks of radiographic exposure devices, radiation machines, survey instruments, alarming ratemeters, transport containers, and storage containers; and

(8) Steps that must be taken immediately by radiography personnel in the event a pocket dosimeter is found to be off-scale or an alarm ratemeter alarms unexpectedly.

(9) The procedure(s) for identifying and reporting defects and noncompliance, as required by Section E.2.19;

(10) The procedure for notifying proper personnel in the event of an accident or incident;

(11) Minimizing exposure of persons in the event of an accident or incident, including a source disconnect, a transport accident, or loss of a source of radiation;

(12) Source recovery procedure if licensee will perform source recovery; and

(13) Maintenance of records.

(b) The licensee or registrant shall maintain copies of current operating and emergency procedures in accordance with Sections E.2.17 and E.2.31.

E.2.12 **Personnel Monitoring.**

(a) The licensee or registrant shall not permit any individual to act as a radiographer or a radiographer's assistant unless, at all times during radiographic operations, each individual wears, on the trunk of the body, a combination of direct reading dosimeter, an operating alarm ratemeter, and either a film badge or a thermoluminescent dosimeter (TLD). At permanent radiography installations where other appropriate alarming or warning devices are in routine use, or during radiographic operations using radiation machines, the wearing of an alarming ratemeter is not required.

(1) Pocket dosimeters shall have a range from zero to 2 millisieverts (200 mrem) and shall be recharged at the start of each shift. Electronic personal dosimeters may only be used

in place of ion-chamber pocket dosimeters.

E.2.12(a)(2)

(2) Each film badge and TLD shall be assigned to and worn by only one individual.

(3) Film badges and TLDs must be exchanged at periods not to exceed one month.

(4) After replacement, each film badge or TLD must be returned to the supplier for processing within 14 calendar days of the end of the monitoring period, or as soon as practicable. In circumstances that make it impossible to return each film badge or TLD in 14 calendar days, such circumstances must be documented and available for review by the Agency.

(b) Direct reading dosimeters such as pocket dosimeters or electronic personal dosimeters, shall be read and the exposures recorded at the beginning and end of each shift, and records shall be maintained in accordance with E.2.32.

(c) Pocket dosimeters, or electronic personal dosimeters, shall be checked at periods not to exceed 12 months for correct response to radiation, and records must be maintained in accordance with E.2.32. Acceptable dosimeters shall read within plus or minus 20 percent of the true radiation exposure.

(d) If an individual's pocket dosimeter is found to be off-scale, or if his or her electronic personal dosimeter reads greater than 2 millisieverts (200 mrem), the individual's film badge or TLD shall be sent for processing within 24 hours. In addition, the individual may not resume work associated with the use of sources of radiation until a determination of the individual's radiation exposure has been made. This determination must be made by the RSO or the RSO's designee. The results of this determination shall be included in the records maintained in accordance with E.2.32.

(e) If a film badge or TLD is lost or damaged, the worker shall cease work immediately until a replacement film badge or TLD is provided and the exposure is calculated for the time period from issuance to loss or damage of the film badge or TLD. The results of the calculated exposure and the time period for which the film badge or TLD was lost or damaged shall be included in the records maintained in accordance with E.2.32.

(f) Reports received from the film badge or TLD processor shall be retained in accordance with E.2.32.

(g) Each alarm ratemeter must:

(1) Be checked to ensure that the alarm functions properly (i.e. sounds) prior to use at the start of each shift;

(2) Be set to give an alarm signal at a pre-set dose rate of 5 millisieverts (500 mrem) per hour, with an accuracy of plus or minus 20 percent of the true radiation dose rate;

(3) Require special means to change the pre-set alarm function; and

(4) Be calibrated at periods not to exceed 12 months for correct response to radiation. The licensee or registrant shall maintain records of alarm ratemeter calibrations in accordance with E.2.32.

E.2.13 **Surveillance.** During each radiographic operation the radiographer shall ensure continuous direct visual surveillance of the operation to protect against unauthorized entry into a radiation area or a high radiation area, as defined in Part A, except at permanent radiographic installations where all entryways are locked and the requirements of E.2.16 are met.

E.2.14 **Posting.** All areas in which industrial radiography is being performed must be conspicuously posted as required by A.3.13(a) and (b). Exceptions listed in A.3.14(b) do not apply to industrial radiographic operations.

E.2.15 **Radiation Surveys.** The licensee or registrant shall:

(a) Conduct all surveys with a calibrated and operable radiation survey instrument that meets the requirements of E.2.5.

E.2.15(b)

(b) Conduct a survey of the radiographic exposure device and the guide tube after each exposure when approaching the device or the guide tube. The survey must determine that the sealed source has returned to its shielded position before exchanging films, repositioning the exposure head, or dismantling equipment. Radiation machines shall be surveyed after each exposure to determine that the machine is off.

(c) Conduct a survey of the radiographic exposure device with a calibrated radiation survey instrument any time the source is exchanged and whenever a radiographic exposure device is placed in a storage area (as defined in A.0), to ensure that the sealed source is in its shielded position.

(d) Maintain records in accordance with E.2.33.

E.2.16 **Permanent Radiographic Installations.**

(a) Each entrance that is used for personnel access to the high radiation area in a permanent radiographic installation shall have either:

(1) An entrance control of the type described in Subparagraph A.3.4(a)(1) that causes the radiation level upon entry into the area to be reduced; or

(2) Both conspicuous visible and audible warning signals to warn of the presence of radiation. The visible signal must be actuated by radiation whenever the source is exposed or the machine is energized. The audible signal must be actuated when an attempt is made to enter the installation while the source is exposed or the machine is energized.

(b) The alarm system must be tested for proper operation with a radiation source each day before the installation is used for radiographic operations. The test must include a check of both the visible and audible signals. Entrance control devices that reduce the radiation level upon entry (designated in paragraph (a)(1) of this section) must be tested monthly. If an entrance control device or an alarm is operating improperly, it must be immediately labeled as defective and repaired within 7 calendar days. The facility may continue to be used during this 7-day period, provided the licensee or registrant implements the continuous surveillance requirements of E.2.13 and uses an alarming ratemeter. Test records for entrance controls and audible and visual alarm must be maintained in accordance with E.2.29.

E.2.17 **Records Required at Temporary Jobsites.** Each licensee or registrant shall maintain current copies of the following documents and records sufficient to demonstrate compliance at each applicable field station and each temporary jobsite:

(a) Appropriate license, certificate of registration or equivalent document authorizing the use of sources of radiation.

(b) Operating and emergency procedures required by E.2.31.

(c) A copy of these regulations.

(d) Survey records as required by E.2.33, for the period of operation at the site.

(e) Records of dosimeter readings as required by E.2.32.

(f) Utilization log for each source of radiation dispatched from that location as required by E.2.8.

(g) Records of equipment problems identified in daily checks of equipment as required by E.2.28(a);

(h) Records of alarm system and entrance control checks required by E.2.29, if applicable;

(i) Evidence of the latest calibration of the radiation survey instruments in use at the site, as required by E.2.25;

(j) Evidence of the latest calibrations of alarm ratemeters and operability checks of dosimeters as required by E.2.32;

YYYY

E.2.17(k)

(k) The shipping papers for the transportation of radioactive materials required by 10 CFR 71.5; and

(l) When operating under reciprocity pursuant to Subpart C.6, a copy of the applicable State license or certificate of registration, or U.S. Nuclear Regulatory Commission license authorizing the use of sources of radiation.

E.2.18 **Performance Requirements for Radiography Equipment.** Equipment used in industrial radiographic operations must meet the following minimum criteria:

(a) Each radiographic exposure device, source assembly or sealed source, and all associated equipment must meet the requirements specified in American National Standards Institute (ANSI), N432-1980 "Radiological Safety for the Design and Construction of Apparatus for Gamma Radiography" [published as NBS Handbook 136, issued January 1981].

(b) In addition to the requirements specified in paragraph (a) of this section, the following requirements apply to radiographic exposure devices, source changers, source assemblies and sealed sources:

(1) The licensee shall ensure that each radiographic exposure device has attached to it a durable, legible, clearly visible label bearing the:

(i) Chemical symbol and mass number of the radionuclide in the device;

(ii) Activity and the date on which this activity was last measured;

(iii) Model or product code and serial number of the sealed source;

(iv) Manufacturer's identity of the sealed source; and

(v) Licensee's name, address and telephone number.

(2) Radiographic exposure devices intended for use as Type B transport containers must meet the applicable requirements of 10 CFR 71.

(3) Modification of exposure devices, source changers, source assemblies and associated equipment is prohibited, unless approved by the Agency or other approval body.

(c) In addition to the requirements specified in paragraphs (a) and (b) of this section, the following requirements apply to radiographic exposure devices, source assemblies and associated equipment that allow the source to be moved out of the device for radiographic operations or to source changers:

(1) The coupling between the source assembly and the control cable must be designed in such a manner that the source assembly will not become disconnected if cranked outside the guide tube. The coupling must be such that it cannot be unintentionally disconnected under normal and reasonably foreseeable abnormal conditions.

(2) The device must automatically secure the source assembly when it is cranked back into the fully shielded position within the device. This securing system may only be released by means of a deliberate operation on the exposure device.

(3) The outlet fittings, lock box, and drive cable fittings on each radiographic exposure device must be equipped with safety plugs or covers which must be installed during storage and transportation to protect the source assembly from water, mud, sand or other foreign matter.

(4) Each sealed source or source assembly must have attached to it or engraved in it, a durable, legible, visible label with the words: "**DANGER - RADIOACTIVE**". The label must not interfere with the safe operation of the exposure device or associated equipment.

(5) The guide tube must be able to withstand a crushing test that closely approximates the crushing forces that are likely to be encountered during use, and be able to withstand a kinking resistance test that closely approximates the kinking forces likely to be encountered during use.

YYYY

(6) Guide tubes must be used when moving the source out of the device.

(7) An exposure head or similar device designed to prevent the source assembly from passing out of the end of the guide tube must be attached to the outermost end of the guide tube during radiographic operations.

(8) The guide tube exposure head connection must be able to withstand the tensile test for control units specified in ANSI N432-1980.

(9) Source changers must provide a system for assuring that the source will not be accidentally withdrawn from the changer when connecting or disconnecting the drive cable to or from a source assembly.

(d) All radiographic exposure devices and associated equipment in use after 10 January 1996 must comply with the requirements of this section.

(e) Notwithstanding paragraph (a)(1) of this section, equipment used in industrial radiographic operations need not comply with Sec. 8.9.2(c) of the Endurance Test in American National Standards Institute N432-1980, if the prototype equipment has been tested using a torque value representative of the torque that an individual using the radiography equipment can realistically exert on the lever or crankshaft of the drive mechanism.

E.2.19 **Reporting Requirements.**

(a) In addition to the reporting requirements specified under other sections of these regulations, each licensee shall provide a written report to the Agency within 30 days of the occurrence of any of the following incidents involving radiographic equipment:

(1) Unintentional disconnection of the source assembly from the control cable;

(2) Inability to retract the source assembly to its fully shielded position and secure it in this position;

(3) Failure of any component (critical to safe operation of the device) to properly perform its intended function; or

(4) An indicator on a radiation machine fails to show that radiation is being produced, an exposure switch fails to terminate production of radiation when turned to the off position, or a safety interlock fails to terminate x-ray production.

(b) The licensee or registarnt shall include the following information in each report submitted under paragraph (a) of this section:

(1) A description of the equipment problem;

(2) Cause of each incident, if known;

(3) Name of the manufacturer and model number of equipment involved in the incident;

(4) Place, time and date of the incident;

(5) Actions taken to establish normal operations;

(6) Corrective actions taken or planned to prevent recurrence; and

(7) Names and qualifications of personnel involved in the incident.

(c) Reports of overexposure submitted under Section A.5.14 of these regulations which involve failure of safety components of radiography equipment must also include the information specified in paragraph (b) of this section.

E.2.19(d)

(d) Any licensee or registrant conducting radiographic operations or storing sources of radiation material at any location not listed on the license and/or certificate of registration for a period in excess of 180 days in a calendar year, shall notify the Agency prior to exceeding the 180 days.

E.2.20 **Conducting Industrial Radiographic Operations.**

(a) Whenever radiography is performed at a location other than a permanent radiographic installation, the radiographer must be accompanied by at least one other qualified radiographer or an individual who has at a minimum met the requirements of E.2.10(c). The additional qualified individual shall observe the operations and be capable of providing immediate assistance to prevent unauthorized entry. Radiography may not be performed if only one qualified individual is present.

(b) All radiographic operations shall be conducted in a permanent radiographic installation, unless otherwise specifically authorized by the Agency.

(c) Except when physically impossible, collimators shall be used in industrial radiographic operations that use radiographic exposure devices that allow the source to be moved out of the device.

(d) A licensee or registrant may conduct lay-barge, offshore platform, or underwater radiography only if procedures have been approved by the Agency, the U.S. Nuclear Regulatory Commission or another Agreement State.

(e) At a job site, the following shall be supplied by the licensee or registrant:

(1) At least one operable, calibrated survey instrument for each exposure device or radiation machine in use;

(2) A current whole body personnel monitor (TLD or film badge) for each person performing radiographic operations;

(3) An operable, calibrated pocket dosimeter with a range of zero to 2 millisieverts (200 mrem) for each person performing radiographic operations;

(4) An operable, calibrated, alarming ratemeter for each person performing radiographic operations using a radiographic exposure device; and

(5) The appropriate barrier ropes and signs.

(f) Each radiographer at a job site shall have on their person a valid certification ID card issued by a certifying entity.

(g) Industrial radiographic operations shall not be performed if any of the items in E.2.20(e) and E.2.20(f) are not available at the job site or are inoperable.

(h) During an inspection, the Agency may terminate an operation if any of the items in E.2.20(e) and E.2.20(f) are not available or operable, or if the required number of radiographic personnel are not present. Operations shall not be resumed until all required conditions are met.

E.2.21 **Radiation Safety Officer for Industrial Radiography.** The RSO shall ensure that radiation safety activities are being performed in accordance with approved procedures and regulatory requirements in the daily operation of the licensee's or registrant's program.

(a) The minimum qualifications, training, and experience for RSOs for industrial radiography are as follows:

(1) Completion of the training and testing requirements of E.2.10(a);

(2) 2000 hours of hands-on experience as a qualified radiographer in industrial radiographic operations; and

E.2.21(a)(3)

(3) Formal training in the establishment and maintenance of a radiation protection program.

(b) The Agency will consider alternatives when the RSO has appropriate training and/or experience in the field of ionizing radiation, and in addition, has adequate formal training with respect to the establishment and maintenance of a radiation safety protection program.

(c) The specific duties and authorities of the RSO include, but are not limited to:

(1) Establishing and overseeing all operating, emergency, and ALARA procedures as required by Part A of these regulations, and reviewing them regularly to ensure that they conform to Agency regulations and to the license and/or certificate of registration conditions.

(2) Overseeing and approving all phases of the training program for radiographic personnel, ensuring that appropriate and effective radiation protection practices are taught;

(3) Ensuring that required radiation surveys and leak tests are performed and documented in accordance with the regulations, including any corrective measures when levels of radiation exceed established limits;

(4) Ensuring that personnel monitoring devices are calibrated, if applicable and used properly; that records are kept of the monitoring results, and that timely notifications are made as required by Part A of these regulations; and

(5) Ensuring that operations are conducted safely and for implementing corrective actions including terminating operations.

(d) Licensees and registrants will have until 27 June 2000 to meet the requirements of paragraph (a) or (b) of this section.

E.2.22 **Supervision of Radiographers' Assistants.** The radiographer's assistant shall be under the personal supervision of a radiographer when using sources of radiation or conducting radiation surveys required by E.2.15(b) to determine that the sealed source has returned to the shielded position or the radiation machine is off after an exposure. The personal supervision must include:

(a) The radiographer's physical presence at the site where the sources of radiation are being used;

(b) The availability of the radiographer to give immediate assistance if required; and

(c) The radiographer's direct observation of the assistant's performance of the operations referred to in this section.

E.2.23 **Records for Industrial Radiography.** Each licensee or registrant shall maintain a copy of its license/certificate of registration, documents incorporated by reference, and amendments to each of these items until superseded by new documents approved by the Agency, or until the Agency terminates the license and/or certificate of registration.

E.2.24 **Records of Receipt and Transfer of Sources of Radiation.**

(a) Each licensee or registrant shall maintain records showing the receipts and transfers of sealed sources, devices using DU for shielding and radiation machines, and retain each record for 3 years after it is made.

(b) These records must include the date, the name of the individual making the record, radionuclide, number of becquerels (curies) or mass (for DU), and manufacturer, model, and serial number of each source of radiation and/or device, as appropriate.

E.2.25 **Records of Radiation Survey Instruments.** Each licensee or registrant shall maintain records of the calibrations of its radiation survey instruments that are required under E.2.5 and retain each record for 3 years after it is made.

YYYY

E.2.26 **Records of Leak Testing of Sealed Sources and Devices Containing Depleted Uranium.** Each licensee shall maintain records of leak test results for sealed sources and for devices containing DU. The results must be stated in units of becquerels (microcuries). The licensee shall retain each record for 3 years after it is made or until the source in storage is removed.

E.2.27 **Records of Quarterly Inventory.**

(a) Each licensee or registrant shall maintain records of the quarterly inventory of sources of radiation, including devices containing depleted uranium as required by E.2.7 and retain each record for 3 years after it is made.

(b) The record must include the date of the inventory, name of the individual conducting the inventory, radionuclide, number of becquerels (curies) or mass (for DU) in each device, location of sources of radiation and/or devices, and manufacturer, model, and serial number of each source of radiation and/or device, as appropriate.

E.2.28 **Records of Inspection and Maintenance of Radiation Machines, Radiographic Exposure Devices, Transport and Storage Containers, Associated Equipment, Source Changers, and Survey Instruments.**

(a) Each licensee or registrant shall maintain records specified in E.2.8 of equipment problems found in daily checks and quarterly inspections of radiation machines, radiographic exposure devices, transport and storage containers, associated equipment, source changers, and survey instruments. Each record shall be maintained for 3 years after it is made.

(b) The record must include the date of check or inspection, name of inspector, equipment involved, any problems found, and what repair and/or maintenance, if any, was performed.

E.2.29 **Records of Alarm System and Entrance Control Checks at Permanent Radiographic Installations.** Each licensee or registrant shall maintain records of alarm system and entrance control device tests required under E.2.16 and retain each record for 3 years after it is made.

E.2.30 **Records of Training and Certification.** Each licensee or registrant shall maintain the following records (of training and certification) for 3 years after the record is made:

(a) Records of training of each radiographer and each radiographer's assistant. The record must include radiographer certification documents and verification of certification status, copies of written tests, dates of oral and practical examinations, names of individuals conducting and receiving the oral and practical examinations, a list of items tested and the results of the oral and practical examinations; and

(b) Records of annual refresher safety training and semi-annual inspections of job performance for each radiographer and each radiographer's assistant. The records must list the topics discussed during the refresher safety training, the dates the annual refresher safety training was conducted, and names of the instructors and attendees. For inspections of job performance, the records must also include a list showing the items checked and any non-compliances observed by the RSO or designee.

E.2.31 **Copies of Operating and Emergency Procedures.** Each licensee or registrant shall maintain a copy of current operating and emergency procedures until the Agency terminates the license and/or certificate of registration. Superseded material must be retained for 3 years after the change is made.

E.2.32 **Records of Personnel Monitoring Procedures.** Each licensee or registrant shall maintain the following exposure records specified in E.2.12:

(a) Direct reading dosimeter readings and yearly operability checks required by E.2.12(b)

and (c) for 3 years after the record is made.

(b) Records of alarm ratemeter calibrations for 3 years after the record is made.

YYYY

E.2.32(c)

(c) Reports received from the film badge or TLD processor until the Agency terminates the license and/or certificate of registration.

(d) Records of estimates of exposures as a result of off-scale personal direct reading dosimeters, or lost or damaged film badges or TLDs, until the Agency terminates the license and/or certificate of registration.

E.2.33 **Records of Radiation Surveys.** Each licensee or registrant shall maintain a record of each exposure device survey conducted before the device is placed in storage as specified in E.2.15(c). Each record must be maintained for 3 years after it is made.

E.2.34 **Form of Records.** Each record required by this subpart must be legible throughout the specified retention period. The record may be the original or a reproduced copy or a microform provided that the copy or microform is authenticated by authorized personnel and that the microform is capable of reproducing a clear copy throughout the required retention period. The record may also be stored in electronic media with the capability for producing legible, accurate, and complete records during the required retention period. Records, such as letters, drawings, and specifications, must include all pertinent information, such as stamps, initials, and signatures. The licensee or registrant shall maintain adequate safeguards against tampering with and loss of records.

E.2.35 **Location of Documents and Records.**

(a) Each licensee or registrant shall maintain copies of records required by this subpart and other applicable parts of these regulations at the location specified in C.5.3(c)(10).

(b) Records shall also be maintained at each applicable field station and each temporary jobsite, as specified by E.2.17.

[REMAINDER OF PAGE INTENTIONALLY LEFT BLANK]

E.3 ANALYTICAL AND RESEARCH AND DEVELOPMENT X-RAY EQUIPMENT

E.3.1 **Equipment Requirement.**

(a) **Safety Device.** A device which prevents the entry of any portion of an individual's body into the primary X-ray beam path or which causes the beam to be shut off upon entry into its path shall be provided on all open-beam configurations. A registrant may apply to the Agency for an exemption from the requirement of a safety device. Such application shall include:

(1) A description of the various safety devices that have been evaluated,

(2) The reason each of these devices cannot be used, and

(3) A description of the alternative methods that will be employed to minimize the possibility of an accidental exposure, including procedures to assure that operators and others in the area will be informed of the absence of safety devices.

(b) **Warning Devices.** Open-beam configurations shall be provided with a readily discernible indication of:

(1) X-ray tube status (**ON-OFF**) located near the radiation source housing, if the primary beam is controlled in this manner; and/or

(2) Shutter status (**OPEN-CLOSED**) located near each port on the radiation source housing, if the primary beam is controlled in this manner.

Warning devices shall be labeled so that their purpose is easily identified. Warning devices shall have fail-safe characteristics.

(c) **Ports.** Unused ports on radiation source housings shall be secured in the closed position in a manner which will prevent casual opening.

(d) **Labeling.** All analytical and research and development X-ray equipment shall be labeled with a readily discernible sign or signs bearing the radiation symbol and the words:

(1) "**CAUTION - HIGH INTENSITY X-RAY BEAM**", or words having a similar intent, on the X-ray source housing; and

(2) "**CAUTION RADIATION - THIS EQUIPMENT PRODUCES RADIATION WHEN ENERGIZED**", or words having a similar intent, near any switch that energizes an X-ray tube if the radiation source is an X-ray tube; or

(3) "**CAUTION - RADIOACTIVE MATERIAL**", or words having a similar intent, on the source housing if the radiation source is a radionuclide.

(e) **Shutters.** On open-beam configurations each port on the radiation source housing shall be equipped with a shutter that cannot be opened unless a collimator or a coupling has been connected to the port.

(f) **Warning Lights.** An easily visible warning light labeled with the words "**X-RAY ON**", or words having a similar intent, shall be located:

(1) Near any switch that energizes an X-ray tube and shall be illuminated only when the tube is energized; or

(2) In the case of a radioactive source, near any switch that opens a housing shutter, and shall be illuminated only when the shutter is open.

Warning lights shall have fail-safe characteristics.

(g) **Radiation Source Housing.** Each radiation source housing shall be subject to the following requirements:

E.3.1(g)(1)

(1) Each X-ray tube housing shall be equipped with an interlock that shuts off the tube if it is removed from the radiation source housing or if the housing is disassembled.

(2) Each radioactive source housing or port cover or each X-ray tube housing shall be so constructed that, with all shutters closed, the radiation measured at a distance of 5 centimeters from its surface is not capable of producing a dose in excess of 2.5 millirems (0.025 mSv) in one hour. For systems utilizing X-ray tubes, this limit shall be met at any specified tube rating.

(h) **Generator Cabinet.** Each X-ray generator shall be supplied with a protective cabinet which limits leakage radiation measured at a distance of 5 cm from its surface such that it is not capable of producing a dose in excess of 0.25 mrem (2.5 µSv) in one hour.

E.3.2 **Area Requirements.**

(a) **Radiation Levels.** The local components of analytical and research and development X-ray systems shall be located and arranged and shall include sufficient shielding or access control such that no radiation levels exist in any area surrounding the local component group which could result in a dose to an individual present therein in excess of the dose limits given in Section A.2.11 of these regulations. For systems utilizing X-ray tubes, these levels shall be met at any specified tube rating.

(b) **Surveys.** Radiation surveys, as required by A.3.2, of all analytical and research and development X-ray systems sufficient to show compliance with Paragraph E.3.2(a) shall be performed:

(1) Upon installation of the equipment, and at least once every 12 months thereafter;

(2) Following any change in the initial arrangement, number, or type of local components in the system;

(3) Following any maintenance requiring the disassembly or removal of a local component in the system;

(4) During the performance of maintenance and alignment procedures if the procedures require the presence of a primary X-ray beam when any local component in the system is disassembled or removed; and

(5) Any time a visual inspection of the local components in the system reveals an abnormal condition.

(6) Whenever personnel monitoring devices show a significant increase over the previous monitoring period or the readings are approaching the Radiation Protection Guides (radiation dose limits).

Radiation survey measurements shall not be required if a registrant can demonstrate compliance to the satisfaction of the Agency with E.3.2(a) in some other manner.

(c) **Posting.** Each area or room containing analytical or research and development X-ray equipment shall be conspicuously posted with a sign or signs bearing the radiation symbol and the words "**CAUTION - X-RAY EQUIPMENT**", or words having a similar intent.

E.3.3 **Operating Requirements.**

(a) **Procedures.** Normal operating procedures shall be written and available to all analytical and research and development workers. No person shall be permitted to operate analytical or research and development X-ray equipment in any manner other than that specified in the procedures unless such person has obtained written approval of the radiation safety officer.

(b) **Bypassing.** No individual shall bypass a safety device or interlock unless such individual

has obtained the approval of the radiation safety officer. Such approval shall be for a specified period of time. When a safety device or interlock has been bypassed, a readily discernible sign bearing the words "**SAFETY DEVICE NOT WORKING**", or words having a similar intent, shall be placed on the radiation source housing.

YYYY

E.3.3(c)

(c) **Repair or Modification of X-ray Tube Systems.** Except as specified in E.3.3(b), no operation involving removal of covers, shielding materials or tube housing or modifications to shutters, collimators, or beam stops shall be performed without ascertaining that the tube is off and will remain off until safe conditions have been restored. The main switch, rather than interlocks, shall be used for routine shutdown in preparation for repairs.

(d) **Radioactive Source Replacement, Testing, or Repair.** Radioactive source housings shall be opened for source replacement, leak testing, or other maintenance or repair procedures only by individuals authorized to specifically conduct such procedures under a license issued by the Agency, the U.S. Nuclear Regulatory Commission, an Agreement State, or a Licensing State.

E.3.4 **Personnel Requirements.**

(a) **Instruction.** No person shall be permitted to operate or maintain analytical or research and development X-ray equipment unless such person has received instruction in and demonstrated competence as to:

(1) Identification of radiation hazards associated with the use of the equipment;

(2) Significance of the various radiation warning and safety devices incorporated into the equipment, or the reasons they have not been installed on certain pieces of equipment and the extra precautions required in such cases;

(3) Proper operating procedures for the equipment;

(4) Symptoms of an acute localized exposure; and

(5) Proper procedures for reporting an actual or suspected exposure.

(b) **Personnel Monitoring.** Finger or wrist dosimetric devices shall be provided to and shall be used by:

(1) Analytical and research and development X-ray equipment workers using systems having an open-beam configuration and not equipped with a safety device; and

(2) Personnel maintaining analytical or research and development X-ray equipment if the maintenance procedures require the presence of a primary X-ray beam when any local component in the analytical or research and development X-ray system is disassembled or removed.

Reported dose values shall not be used for the purpose of determining compliance with Section A.2.3 of these regulations unless evaluated by an individual registered with the Agency to provide Health Physics Services.

E.4 WIRELINE SERVICE OPERATIONS AND SUBSURFACE TRACER STUDIES

E.4.1 **Scope.** The regulations in this part apply to all licensees or registrants who use sources of radiation for wireline service operations including mineral logging, radioactive markers, or subsurface tracer studies.

E.4.2 **Prohibition.** No licensee shall perform wireline service operations with a sealed source(s) unless, prior to commencement of the operation, the licensee has a written agreement with the well operator, well owner, drilling contractor, or land owner that:

(a) in the event a sealed source is lodged downhole, a reasonable effort at recovery will be made; and

(b) in the event a decision is made to abandon the sealed source downhole, the

requirements of Paragraph E.4.23 shall be met.

YYYY

EQUIPMENT CONTROL

E.4.3 **Limits on Levels of Radiation.** Sources of radiation shall be used, stored, and transported in such a manner that the transportation requirements of Subpart C.7 and the dose limitation requirements of Subpart A.2 of these regulations are met.

E.4.4 **Storage Precautions.**

(a) Each source of radiation, except accelerators, shall be provided with a storage and/or transport container. The container shall be provided with a lock, or tamper seal for calibration sources, to prevent unauthorized removal of, or exposure to, the source of radiation.

(b) Sources of radiation shall be stored in a manner which will minimize danger from explosion and/or fire.

E.4.5 **Transport Precautions.** Transport containers shall be physically secured to the transporting vehicle to prevent accidental loss, tampering, or unauthorized removal.

E.4.6 **Radiation Survey Instruments.**

(a) The licensee or registrant shall maintain a calibrated and operable radiation survey instrument at each field station and temporary jobsite to make radiation surveys as required by this part and by Section A.3.2 of these regulations. To satisfy this requirement, the radiation survey instrument must be capable of measuring 0.001 mSv (0.1 mrem) per hour through at least 0.5 mSv (50 mrem) per hour.

(b) Each radiation survey instrument shall be calibrated:

(1) at intervals not to exceed 6 months and after each instrument servicing;

(2) for linear scale instruments, at two points located at approximately 1/3 and 2/3 of full scale on each scale; for logarithmic scale instruments, at mid-range of each decade, and at two points of at least one decade; and for digital instruments, at appropriate points; and

(3) so that accuracy within plus or minus 20 percent of the true radiation level can be demonstrated on each scale.

(c) Calibration records shall be maintained for a period of 2 years for inspection by the Agency.

E.4.7 **Leak Testing of Sealed Sources.**

(a) **Requirements.** Each licensee using sealed sources of radioactive material shall have the sources tested for leakage. Records of leak test results shall be kept in units of microcuries and maintained for inspection by the Agency for 6 months after the next required leak test is performed or until transfer or disposal of the sealed source.

(b) **Method of Testing.** Tests for leakage shall be performed only by persons specifically authorized to perform such tests by the Agency, the U.S. Nuclear Regulatory Commission, an Agreement State, or a Licensing State. The test sample shall be taken from the surface of the source, source holder, or from the surface of the device in which the source is stored or mounted and on which one might expect contamination to accumulate. The test sample shall be analyzed for radioactive contamination, and the analysis shall be capable of detecting the presence of 0.005 microcurie (185 Bq) of radioactive material on the test sample.

(c) **Interval of Testing.** Each sealed source of radioactive material shall be tested at intervals not to exceed 6 months. In the absence of a certificate from a transferor indicating that a test has been made prior to the transfer, the sealed source shall not be put into use until tested. If, for any reason, it is suspected that a sealed source may be leaking, it shall be removed from service immediately and tested for leakage as soon as practical.

(d) **Leaking or Contaminated Sources.** If the test reveals the presence of 0.005 microcurie (185 Bq) or more of leakage or contamination, the licensee shall immediately withdraw the source from use and shall cause it to be decontaminated, repaired, or disposed of in accordance with these regulations. A report describing the equipment involved, the test results, and the corrective action taken shall be filed with the Agency within 5 days of receiving the test results.

(e) **Exemptions.** The following sources are exempted from the periodic leak test requirements of E.4.7(a) through (d).

(1) hydrogen-3 sources;

(2) sources of radioactive material with a half-life of 30 days or less;

(3) sealed sources of radioactive material in gaseous form;

(4) sources of beta- and/or gamma-emitting radioactive material with an activity of 100 microcuries (3.7 MBq) or less; and

(5) sources of alpha-emitting radioactive material with an activity of 10 microcuries (0.370 MBq) or less.

E.4.8 **Quarterly Inventory.** Each licensee or registrant shall conduct a quarterly physical inventory to account for all sources of radiation. Records of inventories shall be maintained for 2 years from the date of the inventory for inspection by the Agency and shall include the quantities and kinds of sources of radiation, the location where sources of radiation are assigned, the date of the inventory, and the name of the individual conducting the inventory.

E.4.9 **Utilization Records.** Each licensee or registrant shall maintain current records, which shall be kept available for inspection by the Agency for 2 years from the date of the recorded event, showing the following information for each source of radiation:

(a) make, model number, and a serial number or a description of each source of radiation used;

(b) the identity of the well-logging supervisor or field unit to whom assigned;

(c) locations where used and dates of use; and

(d) in the case of tracer materials and radioactive markers, the utilization record shall indicate the radionuclide and activity used in a particular well.

E.4.10 **Design, Performance, and Certification Criteria for Sealed Sources Used in Downhole Operations.**

(a) Each sealed source, except those containing radioactive material in gaseous form, used in downhole operations and manufactured after 1 October 1985 shall be certified by the manufacturer, or other testing organization acceptable to the Agency, to meet the following minimum criteria:

(1) be of doubly encapsulated construction;

(2) contain radioactive material whose chemical and physical forms are as insoluble and non-dispersible as practical; and

E.4.10(a)(3)

(3) has been individually pressure tested to at least 24,656 pounds per square inch absolute (170 MN/m^2) without failure.

(b) For sealed sources, except those containing radioactive material in gaseous form, acquired after 1 October 1985, in the absence of a certificate from a transferor certifying that an individual sealed source meets the requirements of Paragraph E.4.10(a), the sealed source shall not be put into use until such determinations and testing have been performed.

(c) Each sealed source, except those containing radioactive material in gaseous form, used in downhole operations after 1 October 1986 shall be certified by the manufacturer, or other testing organization acceptable to the Agency, as meeting the sealed source performance requirements for oil well-logging as contained in the American National Standard N542, "Sealed Radioactive Sources, Classification" in effect on 1 October 1984.

(d) Certification documents shall be maintained for inspection by the Agency for a period of 2 years after source disposal. If the source is abandoned downhole, the certification documents shall be maintained until the Agency authorizes disposition.

E.4.11 **Labeling.**

(a) Each source, source holder, or logging tool containing radioactive material shall bear a durable, legible, and clearly visible marking or label, which has, as a minimum, the standard radiation caution symbol, without the conventional color requirement, and the following wording:

DANGER[2]

RADIOACTIVE

This labeling shall be on the smallest component transported as a separate piece of equipment.

(b) Each transport container shall have permanently attached to it a durable, legible, and clearly visible label which has, as a minimum, the standard radiation caution symbol and the following wording:

DANGER[1]

RADIOACTIVE
NOTIFY CIVIL AUTHORITIES (OR NAME OF COMPANY)

E.4.12 **Inspection and Maintenance.**

(a) Each licensee or registrant shall conduct, at intervals not to exceed 6 months, a program of inspection and maintenance of source holders, logging tools, source handling tools, storage containers, transport containers, and injection tools to assure proper labeling and physical condition. Records of inspection and maintenance shall be maintained for a period of 2 years for inspection by the Agency.

(b) If any inspection conducted pursuant to Paragraph E.4.11(a) reveals damage to labeling or components critical to radiation safety, the device shall be removed from service until repairs have been made.

(c) The repair, opening, or modification of any sealed source shall be performed only by persons specifically authorized to do so by the Agency, the U.S. Nuclear Regulatory Commission, an Agreement State, or a Licensing State.

. . CA. TION.

E.4.12(d)

(d) If a sealed source is stuck in the source holder, the licensee shall not perform any operation, such as drilling, cutting or chiseling, on the source holder unless the licensee is specifically approved by the Agency, the U.S. Nuclear Regulatory Commission, an Agreement State, or a Licensing State to perform this operation.

E.4.13 **Training Requirements.**

(a) No licensee or registrant shall permit any individual to act as a logging supervisor as defined in these regulations until such individual has:

(1) received, in a course recognized by the Agency, the U.S. Nuclear Regulatory Commission, an Agreement State, or a Licensing State, instruction in the subjects outlined in Appendix B of this part and demonstrated an understanding thereof;

(2) read and received instruction in the regulations contained in this subpart and the applicable sections of Parts A, and C of these regulations or their equivalent, conditions of appropriate license or certificate of registration, and the licensee's or registrant's operating and emergency procedures, and demonstrated an understanding thereof; and

(3) demonstrated competence to use sources of radiation, related handling tools, and radiation survey instruments which will be used on the job.

(b) No licensee or registrant shall permit any individual to assist in the handling of sources of radiation until such individual has:

(1) read or received instruction in the licensee's or registrant's operating and emergency procedures and demonstrated an understanding thereof; and

(2) demonstrated competence to use, under the personal supervision of the logging supervisor, the sources of radiation, related handling tools, and radiation survey instruments which will be used on the job.

(c) The licensee or registrant shall maintain employee training records for inspection by the Agency for 2 years following termination of employment.

E.4.14 **Operating and Emergency Procedures.** The licensee's or registrant's operating and emergency procedures shall include instructions in at least the following:

(a) handling and use of sources of radiation to be employed so that no individual is likely to be exposed to radiation doses in excess of the standards established in Subpart A.2 of these regulations;

(b) methods and occasions for conducting radiation surveys;

(c) methods and occasions for locking and securing sources of radiation;

(d) personnel monitoring and the use of personnel monitoring equipment;

(e) transportation to temporary jobsites and field stations, including the packaging and placing of sources of radiation in vehicles, placarding of vehicles, and securing sources of radiation during transportation;

(f) minimizing exposure of individuals in the event of an accident;

(g) procedure for notifying proper personnel in the event of an accident;

(h) maintenance of records;

(i) use, inspection and maintenance of source holders, logging tools, source handling tools, storage containers, transport containers, and injection tools;

E.4.14(j)

(j) procedure to be followed in the event a sealed source is lodged downhole; and

(k) procedures to be used for picking up, receiving, and opening packages containing radioactive material.

(l) for the use of tracers, decontamination of the environment, equipment and personnel;

(m) maintenance of records generated by logging personnel at temporary jobsites; and

(n) actions to be taken if a sealed source is ruptured, including actions to prevent the spread of contamination and minimize inhalation and ingestion of radioactive material and actions to obtain suitable radiation survey instruments as required by Section E.4.6.

E.4.15 **Personnel Monitoring.**

(a) No licensee or registrant shall permit any individual to act as a logging supervisor or to assist in the handling of sources of radiation unless each such individual wears either a film badge or a thermoluminescent dosimeter (TLD). Each film badge or TLD shall be assigned to and worn by only one individual. Film badges must be replaced at least monthly and TLDs replaced at least quarterly. After replacement, each film badge or TLD must be promptly processed.

(b) Personnel monitoring records shall be maintained for inspection until the Agency authorizes disposition.

E.4.16 **Security.** During each logging or tracer application, the logging supervisor or other designated employee shall maintain direct surveillance of the operation to protect against unauthorized and/or unnecessary entry into a restricted area, as defined in these regulations.

E.4.17 **Handling Tools.** The licensee shall provide and require the use of tools that will assure remote handling of sealed sources other than low-activity calibration sources.

E.4.18 **Subsurface Tracer Studies.**

(a) Protective gloves and other appropriate protective clothing and equipment shall be used by all personnel handling radioactive tracer material. Precautions shall be taken to avoid ingestion or inhalation of radioactive material.

(b) No licensee shall cause the injection of radioactive material into potable aquifers without prior written authorization from the Agency.

E.4.19 **Particle Accelerators.** No licensee or registrant shall permit above-ground testing of particle accelerators, designed for use in well-logging, which results in the production of radiation, except in areas or facilities controlled or shielded so that the requirements of Sections A.2.3 and A.2.11 of these regulations, as applicable, are met.

E.4.20 **Radiation Surveys.**

(a) Radiation surveys and/or calculations shall be made and recorded for each area where radioactive materials are stored.

(b) Radiation surveys and/or calculations shall be made and recorded for the radiation levels in occupied positions and on the exterior of each vehicle used to transport radioactive material. Such surveys and/or calculations shall include each source of radiation or combination of sources to be transported in the vehicle.

E.4.20(c)

(c) After removal of the sealed source from the logging tool and before departing the jobsite, the logging tool detector shall be energized, or a survey meter used, to assure that the logging tool is free of contamination.

(d) Radiation surveys shall be made and recorded at the jobsite or well-head for each tracer operation, except those using hydrogen-3, carbon-14, and sulfur-35. These surveys shall include measurements of radiation levels before and after the operations.

(e) Records required pursuant to Paragraphs E.4.19(a) through (d) shall include the dates, the identification of individual(s) making the survey the identification of survey instrument(s) used, and an exact description of the location of the survey. Records of these surveys shall be maintained for inspection by the Agency for 2 years after completion of the survey.

E.4.21 **Documents and Records Required at Field Stations.** Each licensee or registrant shall maintain, for inspection by the Agency, the following documents and records for the specific devices and sources used at the field station:

(a) appropriate license, certificate of registration, or equivalent document;

(b) operating and emergency procedures;

(c) applicable regulations;

(d) records of the latest survey instrument calibrations pursuant to Section E.4.6;

(e) records of the latest leak test results pursuant to Section E.4.7;

(f) records of quarterly inventories required pursuant to Section E.4.8;

(g) utilization records required pursuant to Section E.4.9;

(h) records of inspection and maintenance required pursuant to Section E.4.12; and

(i) survey records required pursuant to Section E.4.19.

(j) training records required pursuant to Section E.4.13.

E.4.22 **Documents and Records Required at Temporary Jobsites.** Each licensee or registrant conducting operations at a temporary jobsite shall have the following documents and records available at that site for inspection by the Agency:

(a) operating and emergency procedures;

(b) survey records required pursuant to E.4.19 for the period of operation at the site;

(c) evidence of current calibration for the radiation survey instruments in use at the site;

(d) when operating in the State under reciprocity, a copy of the appropriate license, certificate of registration, or equivalent document(s); and

(e) shipping papers for the transportation of radioactive material.

E.4.23 **Notification of Incidents, Abandonment, and Lost Sources.**

(a) Notification of incidents and sources lost in other than downhole logging operations shall be made in accordance with appropriate provisions of Section A.5.13 of these regulations.

(b) Whenever a sealed source or device containing radioactive material is lodged downhole, the licensee shall:

(1) monitor at the surface for the presence of radioactive contamination with a radiation survey instrument or logging tool during logging tool recovery operations; and

(2) notify the Agency immediately by telephone and subsequently, within 30 days, by confirmatory letter if the licensee knows or has reason to believe that a sealed source has been ruptured. This letter shall identify the well or other location, describe the magnitude and extent of the escape of radioactive material, assess the consequences of the rupture, and explain efforts planned or being taken to mitigate these consequences.

(c) When it becomes apparent that efforts to recover the radioactive source will not be successful, the licensee shall:

(1) advise the well-operator of the regulations of the Agency regarding abandonment and an appropriate method of abandonment, which shall include:

(i) the immobilization and sealing in place of the radioactive source with a cement plug,

(ii) the setting of a whipstock or other deflection device, and

(iii) the mounting of a permanent identification plaque, at the surface of the well, containing the appropriate information required by Paragraph E.4.22(d);

(2) notify the Agency by telephone, giving the circumstances of the loss, and request approval of the proposed abandonment procedures; and

(3) file a written report with the Agency within 30 days of the abandonment. The licensee shall send a copy of the report to the state agency(s) that issued permits or otherwise approved of the drilling operation. The report shall contain the following information:

(i) date of occurrence and a brief description of attempts to recover the source,

(ii) a description of the radioactive source involved, including radionuclide, quantity, and chemical and physical form,

(iii) surface location and identification of well,

(iv) results of efforts to immobilize and set the source in place,

(v) depth of the radioactive source,

(vi) depth of the top of the cement plug,

(vii) depth of the well,

(viii) any other information, such as a warning statement, contained on the permanent identification plaque; and

(ix) the names of state agencies receiving a copy of this report.

(d) Whenever a sealed source containing radioactive material is abandoned downhole, the licensee shall provide a permanent plaque[3] for posting the well or well-bore. This plaque shall:

(1) be constructed of long-lasting material, such as stainless steel or monel, and

---

[3] A. . . . . A. . . . . .. C . . . .

(2) contain the following engraved on its face:

YYYY

(i) the word "**CAUTION**",

(ii) the radiation symbol without the conventional color requirement,

(iii) the date of abandonment,

(iv) the name of the well operator or well owner,

(v) the well name and well identification number(s) or other designation,

(vi) the sealed source(s) by radionuclide and quantity of activity,

(vii) the source depth and the depth to the top of the plug, and

(viii) an appropriate warning, depending on the specific circumstances of each abandonment.[4]

(e) The licensee shall immediately notify the Agency by telephone and subsequently by confirming letter if the licensee knows or has reason to believe that radioactive material has been lost in or to an underground potable aquifer. Such notice shall designate the well location and shall describe the magnitude and extent of loss of radioactive material, assess the consequences of such loss, and explain efforts planned or being taken to mitigate these consequences.

[REMAINDER OF PAGE INTENTIONALLY LEFT BLANK]

[4] A. . . . . D. . . . . D. . . . . D. . . . . R. . . . I. . . . R. . . . . C. . . . . A. . . . . .

APPENDIX A

RADIOGRAPHER CERTIFICATION

I. Requirements for an Independent Certifying Organization

An independent certifying organization shall:

1. Be an organization such as a society or association, whose members participate in, or have an interest in, the fields of industrial radiography.

2. Make its membership available to the general public nationwide that is not restricted because of race, color, religion, sex, age, national origin or disability.

3. Have a certification program open to nonmembers, as well as members.

4. Be an incorporated, nationally recognized organization, that is involved in setting national standards of practice within its fields of expertise.

5. Have an adequate staff, a viable system for financing its operations, and a policy-and decision-making review board.

6. Have a set of written organizational by-laws and policies that provide adequate assurance of lack of conflict of interest and a system for monitoring and enforcing those by-laws and policies.

7. Have a committee, whose members can carry out their responsibilities impartially, to review and approve the certification guidelines and procedures, and to advise the organization's staff in implementing the certification program.

8. Have a committee, whose members can carry out their responsibilities impartially, to review complaints against certified individuals and to determine appropriate sanctions.

9. Have written procedures describing all aspects of its certification program, maintain records of the current status of each individual's certification and the administration of its certification program.

10. Have procedures to ensure that certified individuals are provided due process with respect to the administration of its certification program, including the process of becoming certified and any sanctions imposed against certified individuals.

11. Have procedures for proctoring examinations, including qualifications for proctors. These procedures must ensure that the individuals proctoring each examination are not employed by the same company or corporation (or a wholly-owned subsidiary of such company or corporation) as any of the examinees.

12. Exchange information about certified individuals with the U.S. Nuclear Regulatory Commission, other independent certifying organizations and/or Agreement States, and allow periodic review of its certification program and related records.

13. Provide a description to the U.S. Nuclear Regulatory Commission of its procedures for choosing examination sites and for providing an appropriate examination environment.

II. Requirements for Certification Programs

All certification programs must:

1. Require applicants for certification to:

   (a) Receive training in the topics set forth in E.2.10(g) or equivalent regulations of the U.S. Nuclear Regulatory Commission or another Agreement State; and

(b) Satisfactorily complete a written examination covering these topics.

YYYY

2. Require applicants for certification to provide documentation that demonstrates that the applicant has:

   (a) Received training in the topics set forth in E.2.10(g) or equivalent Agreement State regulations;

   (b) Satisfactorily completed a minimum period of on- the-job training specified in E.2.10(a); and

   (c) Received verification by a State licensee or registrant or a U.S. Nuclear Regulatory Commission licensee that the applicant has demonstrated the capability of independ- ently working as a radiographer.

3. Include procedures to ensure that all examination questions are protected from disclosure.

4. Include procedures for denying an application, revoking, suspending, and reinstating a certification.

5. Provide a certification period of not less than 3 years nor more than 5 years.

6. Include procedures for renewing certifications and, if the procedures allow renewals without examination, require evidence of recent full-time employment and annual refresher training.

7. Provide a timely response to inquiries, by telephone or letter, from members of the public, about an individual's certification status.

III. Requirements for Written Examinations

All examinations must be:

1. Designed to test an individual's knowledge and understanding of the topics listed in E.2.10(g) or equivalent U.S. Nuclear Regulatory Commission and/or State requirements.

2. Written in a multiple-choice format.

3. Have test items drawn from a question bank containing psychometrically valid questions based on the material in E.2.10(g).

[REMAINDER OF PAGE INTENTIONALLY LEFT BLANK]

APPENDIX B

SUBJECTS TO BE INCLUDED IN TRAINING COURSES FOR LOGGING SUPERVISORS

I. **Fundamentals of Radiation Safety**

A. Characteristics of radiation

B. Units of radiation dose and quantity of radioactivity

C. Significance of radiation dose

1. Radiation protection standards

2. Biological effects of radiation dose

D. Levels of radiation from sources of radiation

E. Methods of minimizing radiation dose

1. Working time

2. Working distances

3. Shielding

F. Radiation safety practices including prevention of contamination and methods of decontamination

II. **Radiation Detection Instrumentation to be Used**

A. Use of radiation survey instruments

1. Operation

2. Calibration

3. Limitations

B. Survey techniques

C. Use of personnel monitoring equipment

III. **Equipment to be Used**

A. Handling equipment

B. Sources of radiation

C. Storage and control of equipment

D. Operation and control of equipment

IV. **The Requirements of Pertinent Federal and State Regulations**

V. **The Licensee's or Registrant's Written Operating and Emergency Procedures**

VI. **The Licensee's or Registrant's Recordkeeping Procedures**

YYYY

APPENDIX C

Example of Plaque for Identifying Well Containing Sealed Sources Containing Radioactive Material Abandoned Downhole

[C O M P A N Y N A M E]

[W E L L I D E N T I F I C A T I O N]

C A U T I O N

N E 2 C U R I E C S - 1 3 7 R A D I O A C T I V

S O U R C E A B A N D O N E D 3 - 3 - 7 5 A T

) 0 F T . P L U G B A C K D E P T H 8 2 0 0 F

D O N O T R E - E N T E R T H I S W E L L

B E F O R E C O N T A C T I N G

R I R A D I A T I O N C O N T R O L A G E N C Y

The size of the plaque should be convenient for use on active or inactive wells [e.g. a 7-inch square]. Letter size of the word "CAUTION" should be approximately twice the size of the rest of the information. [e.g. 1/2 inch and 1/4 inch letter size, respectively.]

YYYY

RULES AND REGULATIONS FOR THE CONTROL OF RADIATION

(R23-1.3-RAD)

PART F

X-RAYS IN THE HEALING ARTS

JUNE 1978

As Amended:

June 1981
October 1984
February 1990
February 1990 (E)
August 1991
February 1994
June 1995
June 1999

PART F
X-RAYS IN THE HEALING ARTS

F.1 SCOPE

F.1.1 This part establishes requirements, for which a registrant is responsible, for use of X-ray equipment in the healing arts or veterinary medicine. The provisions of this part are in addition to, and not in substitution for, other applicable provisions of these regulations.

F.1.2 The use of X-ray equipment for the intentional exposure of individuals for diagnosis or treatment shall be by or under the supervision of a licensed practitioner of the healing arts.

F.1.3 The use of X-ray equipment in the practice of veterinary medicine shall be by or under the supervision of an individual authorized by and licensed in accordance with state statutes to engage in veterinary medicine.

F.2 GENERAL REQUIREMENTS FOR ALL HEALING ARTS FACILITIES

F.2.1 **Administrative Controls.** The registrant shall be responsible for directing the operation of the X-ray systems which have been registered with the Agency. The registrant or the registrant's agent shall assure that the requirement of this part are met in the operation of the X-ray system(s).

F.2.2 An X-ray system which does not meet the provisions of these regulations shall not be operated for diagnostic or therapeutic purposes.

F.2.3 (a) Individuals who will be operating the X-ray systems shall possess a current license in accordance with the Rules and Regulations for the Licensure of Radiographers, Nuclear Medicine Technologists and Radiation Therapists [R5-68-RAD] of the Rhode Island Department of Health, unless the individual is specifically exempted from licensure by Section 6.0 of said regulations. Individuals who will be operating the X-ray systems and who are not subject to licensure under R5-68-RAD shall be adequately instructed in the safe operating procedures and be competent in the safe use of the equipment. As a minimum, such instruction shall consist of subjects outlined in Appendix B of this part.

(b) The names and qualifications of all personnel operating X-ray equipment must be kept on file for Agency inspection at each facility location.

F.2.4 A chart shall be provided in the vicinity of the diagnostic X-ray system's control panel, which specifies for all examinations performed with that system the following information:

(a) Patient's anatomical size versus technique factors to be utilized;

(b) Type and size of the film or film-screen combination to be used;

(c) Type and focal distance of the grid to be used, if any;

(d) Source to image receptor distance to be used; and

(e) Type and location of placement of patient shielding (e.g., gonad, thyroid, lap apron, etc.).

F.2.5 Written safety procedures and rules shall be provided to each individual operating X-ray equipment, including any restrictions of the operating technique required for the safe operation of the particular X-ray system. The operator shall be able to demonstrate familiarity with these rules.

F.2.6

F.2.6 Except for patients who cannot be moved out of the room, only the staff and ancillary personnel required for the medical procedure or training shall be in the room during the radiographic exposure. Other than the patient being examined:

(a) All individuals shall be positioned such that no part of the body will be struck by the useful beam unless protected by 0.5 millimeter lead equivalent.

(b) Staff and ancillary personnel shall be protected from direct scatter radiation by protective aprons or whole body protective barriers of not less than 0.25 millimeter lead equivalent. The protective apron shall cover the back of the trunk of staff and ancillary personnel as necessary for protection from the direct scatter radiation.

(c) Patients who cannot be removed from the room shall be protected from the direct scatter radiation by whole body protective barriers of 0.25 millimeter lead equivalent or shall be so positioned that the nearest portion of the body is at least 2 meters from both the tube head and the nearest edge of the image receptor.

(d) Written safety procedures, as required by F.2.5, shall describe how the requirements of this section will be met when using mobile or portable X-ray systems.

F.2.7 Gonadal shielding of not less than 0.5 millimeter lead equivalent shall be used for patients who have not passed the reproductive age during radiographic procedures in which the gonads are in the useful beam, except for cases in which the technique chart specifically indicates that this would interfere with the diagnostic procedure.

F.2.8 Individuals shall not be exposed to the useful beam except for healing arts purposes and unless such exposure has been ordered in writing by a licensed practitioner of the healing arts. This provision specifically prohibits deliberate exposure of an individual for training, demonstration or other non-healing-arts purposes, and exposure of an individual for the purpose of healing arts screening except as authorized by F.2.12.

F.2.9 **When a Patient or Film Must be Provided with Auxiliary Support During a Radiation Exposure:**

(a) Mechanical holding devices shall be used when the technique permits. The safety rules, required by F.2.5, shall list individual projections where holding devices cannot be utilized;

(b) Written safety procedures, as required by F.2.5, shall indicate the requirements for selecting a holder and the procedure the holder shall follow;

(c) The human holder shall be instructed in personal radiation safety and protected as required by Section F.2.6;

(d) No individual shall be used routinely to hold film or patients;

(e) Such holding shall be permitted only in very unusual and rare situations;

(f) In those cases where the patient must hold the film, except during dental examinations covered in Subpart F.6, any portion of the body other than the area of clinical interest struck by the useful beam shall be protected by not less than 0.5 millimeter lead equivalent material; and

(g) A record shall be made of the examination and shall include the name of the human holder; date of the examination, number of exposures and technique factors utilized for the exposure(s).

F.2.10 Procedures and auxiliary equipment designed to minimize patient and personnel exposure commensurate with the needed diagnostic information shall be utilized. This is interpreted to include but is not limited to:

(a) The speed of film or screen and film combinations shall be the fastest speed consistent with the diagnostic objective of the examinations. Cassettes without intensifying screens shall not be used for any diagnostic radiological imaging.

(b) The radiation exposure to the patient shall be minimized consistent with the production of images of good diagnostic quality.

(c) Portable or mobile equipment shall be used only for examinations where it is medically inadvisable or impractical to transfer the patient(s) to a stationary radiographic installation.

(d) Facilities shall establish and implement a quality assurance program for X-ray film processing, whether processing is manual or automatic.

(e) **X-ray Film Developing Requirements.** Compliance with this paragraph is required of all healing arts registrants and is designed to ensure that the patient and operator exposure is minimized and to produce optimum image quality and diagnostic information.

(1) **Manual Processing of Films:**

(i) Processing of film. All films shall be processed to achieve optimum performance. This criterion shall be adjudged to have been met if the manufacturer's published minimum recommendations for time and temperature are followed.

(ii) Devices shall be available which will:

(a) Give the actual temperature of the developer; and

(b) Give an audible or visible signal indicating the termination of a preset time.

(iii) Chemical-film processing control.

(a) Chemicals shall be mixed in accordance with the chemical manufacturer's recommendations.

(b) Developer replenisher shall be periodically added to the developer tank based on the recommendations of the chemical or film manufacturer. Solution may be removed from the tank to permit the addition of an adequate volume of replenisher.

(c) All processing chemicals shall be completely replaced at least every two months.

(2) **Automatic Processors and Other Closed Processing Systems.**

(i) Films shall be processed in accordance with the time temperature relationships recommended by the film manufacturer commensurate with the automatic processor and chemistry in use; and

(ii) The specific developer temperature and immersion time shall be posted on the automatic processor. For automatic processors capable of two or more pre-selectable settings, the posting shall include both a description of each processor cycle setting (e.g. standard, extended, rapid or cycle in seconds) and the specific developer temperature and immersion time associated with that processor cycle setting.

(f) **[RESERVED]**

(g) If grids are used between the patient and the image receptor to decrease scatter to the film and improve contrast, the grid shall:

(1) Be positioned properly (i.e., tube side facing the proper direction) and grid centered to the central ray.

(2) If of the focused type, be of the proper focal distance for the SID being used.

YYY

(h) **Other Requirements:**

(1) Pass boxes, if provided, shall be so constructed as to exclude light from the darkroom when cassettes are placed in or removed from the boxes, and shall incorporate adequate shielding from stray radiation to prevent exposure of undeveloped film.

(2) The darkroom shall be light tight and use proper safelighting such that any film type in use exposed in a cassette to x-radiation sufficient to produce an optical density from 1 to 2 when processed shall not suffer an increase in density greater than 0.05 when exposed in the darkroom for 2 minutes with all safelights on. If used, daylight film handling systems shall preclude fogging of the film.

(3) Darkrooms typically used by more than one individual shall be provided a method to prevent accidental entry while undeveloped films are being handled or processed.

(4) Film shall be stored in a cool, dry place and shall be protected from exposure to stray radiation. Film in open packages shall be stored in a light tight container.

(5) Film cassettes and intensifying screens shall be inspected periodically and shall be cleaned and replaced as necessary to assure radiographs of good diagnostic quality.

(6) Outdated x-ray film shall not be used for diagnostic radiographs unless a sample of the film passes a sensitometric test for normal ranges of base plus fog, contrast and speed.

(7) Film developing solutions shall be prepared in accordance with the directions given by the manufacturer, and shall be maintained in strength by replenishment or renewal so that full development is accomplished within the time specified by the manufacturer.

F.2.11 All individuals who are associated with the operation of an X-ray system are subject to the applicable requirements of Part A of these regulations.

F.2.12 **Healing Arts Screening.** Any person proposing to conduct a healing arts screening program shall not initiate such a program without prior approval of the Agency. When requesting such approval, that person shall submit the information outlined in Appendix A of this part. If any information submitted to the Agency becomes invalid or out-dated, the Agency shall be immediately notified.

F.2.13 **Information and Maintenance Record and Associated Information.** The registrant shall maintain the following information in a separate file or package in chronological order for each X-ray system, for inspection by the Agency:

(a) Maximum rating of technique factors;

(b) Model and serial numbers of all certifiable components;

(c) Aluminum equivalent filtration in the useful beam, including any routine variation;

(d) Tube rating charts and cooling curves;

(e) Records of surveys, calibrations, maintenance, and modifications performed on the X-ray system(s) after 2 June 1978 with the names of persons who performed such services;

(f) A scale drawing of the room in which a stationary X-ray system is located with such drawing indicating the current use of areas adjacent to the room and an estimate of the extent of occupancy by an individual in such areas. In addition, the drawing shall include the results of a survey for radiation levels present at the operator's position and at pertinent points outside the room at specified test conditions; or the type and thickness of materials, or lead equivalency, of each protective barrier.

(g) A copy of all correspondence with this Agency regarding that X-ray system.

YYY

F.2.14 **X-Ray Utilization Log.**

(a) Except for veterinary facilities, each facility shall maintain a record containing the patient's name, the type of examinations, and the dates the examinations were performed. The record shall also include the following information:

(1) Name of the licensed practitioner of the healing arts ordering the examination.

(2) Name(s) of individuals who performed the examination.

(3) Any deviation from the standard procedure as specified on the technique chart, including all repeat exposures.

(4) When applicable, the cumulative fluoro on-time.

(5) When applicable, the X-ray system used.

(6) When the patient or film must be provided with human auxiliary support, the name of the human holder.

(b) X-ray utilization logs shall be maintained for a minimum of five (5) years following the examination or treatment of adult patients. Records of examination or treatment of minors shall be maintained for a minimum of five (5) years beyond the age of majority.

(c) If X-ray utilization logs are stored electronically, records shall be maintained in a manner that will allow retrieval of records for any specified time period.

[REMAINDER OF PAGE INTENTIONALLY LEFT BLANK]

F.3 GENERAL REQUIREMENTS FOR ALL DIAGNOSTIC X-RAY SYSTEMS

F.3.1 In addition to other requirement of this part, all diagnostic X-ray systems shall meet the requirements of this subpart.

F.3.2 **Certified Systems and Components.** Diagnostic X-ray systems, for use on humans, and their associated components certified pursuant to the Federal diagnostic X-ray standard shall be maintained in compliance with applicable requirements of such standard in Title 21, Code of Federal Regulations, Chapter I, Subchapter J.

F.3.3 **Warning Label.** The control panel containing the main power switch shall bear the warning statement, legible and accessible to view: "**WARNING: This X-ray unit may be dangerous to patient and operator unless safe exposure factors and operating instructions are observed**".

F.3.4 **Battery Charge Indicator.** On battery-powered X-ray generators, visual means shall be provided on the control panel to indicate whether the battery is in a state of charge adequate for proper operation.

F.3.5 **Leakage Radiation from the Diagnostic Source Assembly.** The leakage radiation from the diagnostic source assembly measured at a distance of 1 meter in any direction from the source shall not exceed 100 milliroentgens in 1 hour when the X-ray tube is operated at its leakage technique factors. Compliance shall be determined by measurements averaged over an area of 100 square centimeters with no linear dimension greater than 10 centimeters.

F.3.6 **Radiation from Components Other Than the Diagnostic Source Assembly.** The radiation emitted by a component other than the diagnostic source assembly shall not exceed 2 milliroentgens in 1 hour at 5 centimeters from any accessible surface of the component when it is operated in an assembled X-ray system under any conditions for which it was designed. Compliance shall be determined by measurements averaged over an area of 100 square centimeters with no linear dimension greater than 20 centimeters.

F.3.7 **Beam Quality.**

(a) The half-value layer of the useful beam for a given X-ray tube potential shall not be less than the values shown in Table 1. If it is necessary to determine such half-value layer at an X-ray tube potential which is not listed in Table 1, linear interpolation or extrapolation may be made.

(b) Beryllium window tubes shall have a minimum of 0.5 millimeter aluminum equivalent filtration permanently installed in the useful beam.

(c) For capacitor energy storage equipment, compliance with the half-value layer requirement shall be determined with the maximum quantity of charge per exposure.

(d) The required minimal aluminum equivalent filtration shall include the filtration contributed by all materials which are always present between the source and the patient.

(e) For X-ray system which have variable kVp and variable filtration for the useful beam, a device shall link the kVp selector with the filter(s) and shall prevent an exposure unless the minimum amount of filtration required by F.3.7(a) is in the useful beam for the given kVp which has been selected.

[REMAINDER OF PAGE INTENTIONALLY LEFT BLANK]

TABLE I

Design operating range (Kilovolts peak)	Measured potential (Kilovolts peak)	(Millimeters of aluminum)
Below 50	30	0.3
	40	0.4
	49	0.5
50 to 70	50	1.2
	60	1.3
	70	1.5
Above 70	71	2.1
	80	2.3
	90	2.5
	100	2.7
	110	3.0
	120	3.2
	130	3.5
	140	3.8
	150	4.1

The half-value layer requirement will be considered to have been met if it can be demonstrated that the aluminum equivalent of the total filtration in the primary beam is not less than that shown in Table II.

TABLE II

Filtration Required vs. Operating Voltage

Operating Voltage (kVp)	Total Filtration (inherent plus added) (millimeters aluminum equivalent)
Below 50	0.5 millimeters
50 - 70	1.5 millimeters
Above 70	2.5 millimeters

F.3.8 **Multiple Tubes.** Where two or more radiographic tubes are controlled by one exposure switch, the tube or tubes which have been selected shall be clearly indicated prior to initiation of the exposure. This indication shall be both on the X-ray control panel and at or near the tube housing assembly which has been selected.

F.3.9 **Mechanical Support of Tube Head.** The tube housing assembly supports shall be adjusted such that the tube housing assembly will remain stable during an exposure unless tube housing movement is a designed function of the X-ray system.

F.3.10 **Technique Indicators.** The technique factors to be used during an exposure shall be indicated before the exposure begins, except when automatic EXPOSURE controls are used, in which case the technique factors which are set prior to the exposure shall be indicated. This requirement may be met by permanent markings on equipment having fixed technique factors. Indication of technique factors shall be visible from the operator's position except in the case of spot films made by the fluoroscopist.

F.3.11 **Structural Shielding.** Structural shielding shall be provided whenever necessary to meet the requirements of A.2.3 and A.2.11, in addition to specific requirements contained in other parts of these regulations.

[REMAINDER OF PAGE INTENTIONALLY LEFT BLANK]

F.4 FLUOROSCOPIC X-RAY SYSTEMS

F.4.1 The requirements of F.3.2 for Certified Systems and Components shall apply to certified fluoroscopic X-ray systems and components, including radiation therapy simulation systems. Other fluoroscopic X-ray systems shall meet the requirements of the remainder of this subpart.

F.4.2 **Limitation of Useful Beam.**

(a) The X-ray tube used for fluoroscopy shall not produce X-rays unless the primary protective barrier is in position to intercept the entire useful beam at all times, and

(b) The entire cross section of the useful beam shall be intercepted by the primary protective barrier of the fluoroscopic image assembly at any source-image receptor distance (SID).

F.4.3 **Prohibition on Use of Non-Image-Intensified Fluoroscopy.** The use of non-image-intensified fluoroscopy on humans is prohibited.

F.4.4 **Image-Intensified Fluoroscopy and Spot Filming Requirements.**

(a) For image-intensified fluoroscopic equipment, neither the length nor the width of the X-ray field in the plane of the image receptor shall exceed the visible area of the image receptor by more than 3 percent of the SID. The sum of the excess length and the excess width shall be no greater than 4 percent of the SID. In addition:

(1) means shall be provided to permit further limitation of the field. Beam-limiting devices manufactured after 22 May 1979, and incorporated in equipment with a variable SID and/or a visible image receptor area of greater than 300 square centimeters, shall be provided with means for stepless adjustment of the X-ray field;

(2) all equipment with a fixed SID and a visible image receptor area of 300 square centimeters or less shall be provided with either stepless adjustment of the X-ray field or means to further limit the X-ray field size at the image receptor to 125 square centimeters or less. Stepless adjustment shall, at the greatest SID, provide continuous field sizes from the maximum obtainable to a field size of 5 centimeters by 5 centimeters or less;

(3) for equipment manufactured after 25 February 1978, when the angle between the image receptor and the beam axis of the X-ray beam is variable, means shall be provided to indicate when the axis of the X-ray beam is perpendicular to the plane of the image receptor;

(4) compliance shall be determined with the beam axis indicated to be perpendicular to the plane of the image receptor. For rectangular X-Ray fields used with circular image reception, the error in alignment shall be determined along the length and width dimensions of the X-ray field which pass through the center of the visible area of the image receptor; and

(5) for uncertified image-intensified fluoroscopic equipment with a spot film device, the X-ray beam with the shutters wide open (during either fluoroscopy itself or spot films) shall be no larger than the dimension of the largest spot film size for which the device is designed. Measurements shall be made at 30 centimeter table top to the film plane distance.

(b) Spot film devices which are certified components shall meet the following additional requirements:

(1) means shall be provided between the source and the patient for adjustment of the X-ray field size in the plane of the film to the size of that portion of the film which has been selected on the spot film selector. Such adjustment shall be automatically accomplished except when the X-ray field size in the plane of the film is smaller than that of the selected portion of the film. For spot film devices manufactured after 21 June 1979, if the X-ray field size is less than the size of the selected portion of the film, the means for adjustment of the

field size shall be only at the operator's option;

YYYY

(2) it shall be possible to adjust the X-ray field size in the plane of the film to a size smaller than the selected portion of the film. The minimum field size at the greatest SID shall be equal to, or less than, 5 centimeters by 5 centimeters;

(3) the center of the X-ray field in the plane of the film shall be aligned with the center of the selected portion of the film to within 2 percent of the SID; and

(4) on spot film devices manufactured after 25 February 1978, if the angle between the plane of the image receptor and beam axis is variable, means shall be provided to indicate when the axis of the X-ray beam is perpendicular to the plane of the image receptor, and compliance shall be determined with the beam axis indicated to be perpendicular to the plane of the image receptor.

(c) For equipment manufactured on or after 29 November 1984, if a means exists to override any of the automatic X-ray field size adjustments required in Section F.4.4, that means:

(1) shall be designed for use only in the event of system failure;

(2) shall incorporate a signal visible at the fluoroscopist's position which will indicate whenever the automatic field size adjustment is overridden; and

(3) shall be clearly and durably labeled as follows:

FOR X-RAY FIELD LIMITATION SYSTEM FAILURE

F.4.5 **Activation of the Fluoroscopic Tube.** X-ray production in the fluoroscopic mode shall be controlled by a device which requires continuous pressure by the fluoroscopist for the entire time of any exposure. When recording serial fluoroscopic images, the fluoroscopist shall be able to terminate the X-ray exposure(s) at any time, but means may be provided to permit completion of any single exposure of the series in process.

F.4.6 **EXPOSURE Rate Limits.** The entrance **EXPOSURE** rate allowable limits are as follows:

(a) For uncertified fluoroscopic equipment, the **EXPOSURE** rate at the point where the center of the useful beam enters the patient shall not exceed 10 roentgens (2.58 mC/kg) per minute, except during recording of fluoroscopic images, or when provided with an optional high level control.

(b) For uncertified fluoroscopic equipment, when provided with optional high level control, the equipment shall not be operable at any combination of tube potential and current which will result in an **EXPOSURE** rate in excess of 10 roentgens (2.58 mC/kg) per minute at the point where the center of the useful beam enters the patient unless the high level control is activated.

(1) Special means of activation of high level controls shall be required. The high level control shall only be operable when continuous manual activation is provided by the operator.

(2) A continuous signal audible to the fluoroscopist shall indicate that the high level control is being employed.

(c) **Certified Fluoroscopic Equipment:**

(1) Fluoroscopic equipment manufactured before 19 May 1995 must meet the requirements of 21 CFR 1020, Section 1020.32, Paragraph (d).

(2) Fluoroscopic equipment manufactured on or after 19 May 1995 must meet the requirements of 21 CFR 1020, Section 1020.32, Paragraph (e).

(d) Compliance with the requirements of this section, for both certified and uncertified fluoroscopic equipment, shall be determined as follows:

(1) Movable grids and compression devices shall be removed from the useful beam during the measurement.

YYYY

(2) If the source is below the table, **EXPOSURE** rate shall be measured 1 centimeter above the tabletop or cradle.

(3) If the source is above the table, the **EXPOSURE** rate shall be measured at 30 centimeters above the tabletop with the end of the beam limiting device or spacer positioned as closely as possible to the point of measurement.

(4) In a mobile C-arm type of fluoroscope, the **EXPOSURE** rate shall be measured 30 centimeters from the input surface of the fluoroscopic imaging assembly.

(5) In a stationary C-arm type of fluoroscope where an integral patient support device (table) is provided, the entrance **EXPOSURE** rate shall be measured at 30 centimeters from the input surface of the fluoroscopic imaging assembly, with the source positioned at the minimum available SID, provided that the end of the beam limiting device or spacer is no closer than 30 centimeters from the input surface of the fluoroscopic imaging assembly.

(6) In a lateral type of fluoroscope, the entrance **EXPOSURE** rate shall be measured at a point 15 centimeters from the centerline of the X-ray table and in the direction of the X-ray source with the end of the beam-limiting device or spacer positioned as closely as possible to the point of measurement. If the tabletop is movable, it shall be positioned as closely as possible to the lateral X-ray source, with the end of the beam-limiting device or spacer no closer than 15 centimeters to the centerline of the X-ray table

F.4.7 **Periodic Measurement of Entrance EXPOSURE Rate.** Periodic measurement of entrance **EXPOSURE** rate shall be performed by, or under the direction of, a person registered with the Agency to provide Diagnostic X-ray Physics Services. These measurements shall be performed for both maximum and typical values and shall be made at least annually or after any maintenance of the system which might affect the **EXPOSURE** rate. Results of these measurements shall be posted where any fluoroscopist may have ready access to such results while using the fluoroscope and in the record required in F.2.13(e). Results of the measurements shall include the roentgens per minute, as well as the technique factors used to determine such results. The name of the person, registered with the Agency to provide Diagnostic X-ray Physics Services, performing the measurements and the date the measurements were performed shall be included in the results.

(a) Conditions of periodic measurement of maximum entrance **EXPOSURE** rate are as follows:

(1) The measurements shall be made under conditions that satisfy the requirements of F.4.6(d);

(2) The kVp, mA and/or other selectable parameters shall be adjusted to those settings which give the maximum entrance **EXPOSURE** rate; and

(3) The X-ray system(s) that incorporates automatic **EXPOSURE** rate control shall have sufficient material placed in the useful beam to produce the maximum output of that system (in R/minute).

(b) Conditions of periodic measurement of typical entrance **EXPOSURE** rate are as follows:

(1) The measurements shall be made under conditions that satisfy the requirements of F.4.6(d)(2)-(d)(6) and are typical of clinical use of the X-ray system;

(2) The kVp shall be that typical of clinical use of the X-ray system;

(3) The X-ray system(s) that incorporates automatic **EXPOSURE** rate control shall have sufficient material placed in the useful beam to produce operating parameters typical of the use of the X-ray system; and

F.4.7(b)(4)

(4) X-ray system(s) that do not incorporate an automatic **EXPOSURE** rate control shall utilize a milliamperage typical of the clinical use of the X-ray system.[1]

(c) Entrance **EXPOSURE** rate measurements shall be performed with a calibrated dosimetry system. The calibration of such a system shall be traceable to a national standard either directly or indirectly through intercomparison with a dosimetry system whose calibration is directly traceable to a national standard. The dosimetry system shall have been calibrated or intercompared within the preceding 2 years, or after servicing which may have affected calibration. Such intercomparisons shall be performed under the supervision of a person registered with the Agency to provide Diagnostic X-ray Physics Services.

F.4.8 **Barrier Transmitted Radiation Rate Limits.** The **EXPOSURE** rate due to transmission through the primary protective barrier with the attenuation block in the useful beam, combined with the radiation from the image intensifier, if provided, shall not exceed 2 milliroentgens (0.5 µC/kg) per hour at 10 centimeters from any accessable surface of the fluoroscopic imaging assembly beyond the plane of the image receptor for each Roentgen (mC/kg) per minute of entrance exposure rate. The **EXPOSURE** rate due to transmission through the primary protective barrier combined with radiation from the image intensifier shall be determined by measurements averaged over an area of 100 square centimeters with no linear dimension greater than 20 centimeters. If the source is below the tabletop, the measurement shall be made with the input surface of the fluoroscopic imaging assembly positioned 30 centimeters above the tabletop. If the source is above the tabletop and the SID is variable, the measurement shall be made with the end of the beam-limiting device or spacer as close to the tabletop as it can be placed, provided that it shall not be closer than 30 centimeters. Movable grids and compression devices shall be removed from the useful beam during the measurement. If the entrance **EXPOSURE** rate and the barrier transmission are measured at the same time during one activation of the fluoroscopic tube, the attenuation block shall be positioned in the useful beam at least 10 centimeters from the point of measurement of entrance **EXPOSURE** rate.

F.4.9 **[RESERVED]**

F.4.10 **Indication of Potential and Current.** During fluoroscopy and cinefluorography, the kilovoltage (kV) and the milliamperage (mA) shall be continuously indicated.

F.4.11 **Source-Skin Distance.** The source to skin distance shall not be less than:

(a) 38 centimeters on stationary fluoroscopes manufactured on or after 1 August 1974;

(b) 35.5 centimeters on stationary fluoroscopes manufactured prior to 1 August 1974;

(c) 30 centimeters on all mobile fluoroscopes; and

(d) 20 centimeters for image intensified fluoroscopes used for specific surgical application. Written safety procedures must provide precautionary measures to be adhered to during the use of this type of fluoroscope.

F.4.12 **Fluoroscopic Timer.** Means shall be provided to preset the cumulative on-time of the fluoroscopic tube. The maximum cumulative time of the timing device shall not exceed five (5) minutes without resetting. A signal audible to the fluoroscopist shall indicate the completion of any preset cumulative on-time. Such signal shall continue to sound while X-rays are produced until the timing device is reset.

F.4.13 **Mobile Fluoroscopes.** In addition to the other requirements of Subpart F.4, mobile

---

[1] [illegible]

fluoroscopes shall provide intensified imaging.

F.4.14 **Control of Scattered Radiation.**

(a) Fluoroscopic table designs when combined with procedures utilized shall be such that no unprotected part of any staff or ancillary individual's body shall be exposed to unattenuated scattered radiation which originates from under the table. The attenuation required shall be not less than 0.25 millimeter lead equivalent.

(b) Equipment configuration when combined with procedures shall be such that no portion of any staff or ancillary individual's body, except the extremities, shall be exposed to the unattenuated scattered radiation emanating from above the tabletop unless that individual is at least 120 centimeters from the center of the useful beam, or the radiation has passed through not less than 0.25 millimeter lead equivalent material (e.g., drapes, Bucky-slot cover-sliding or folding panel, or self supporting curtains) in addition to any lead equivalency provided by the protective apron referred to in Section F.2.6. Exceptions may be made in some special procedures where a sterile field will not permit the use of the normal protective barriers. Where the use of prefitted sterilized covers for the barriers is practical, the Agency shall not permit such exception.

[REMAINDER OF PAGE INTENTIONALLY LEFT BLANK]

F.5 X-RAY SYSTEMS OTHER THAN FLUOROSCOPIC, DENTAL INTRAORAL, OR VETERINARY SYSTEMS

F.5.1 **Beam Limitation.** The useful beam shall be limited to the area of clinical interest.

(a) For general purpose stationary, mobile and portable X-ray systems there shall be provided a means for stepless adjustment of the size of the X-ray field, where the adjustment of each dimension of the field is independent of the other. Means shall also be provided for visually defining the perimeter of the X-ray field, and to indicate the SID to within 2 percent. The total misalignment of the edges of the visually defined field with the respective edges of the X-ray field along either the length or width of the visually defined field shall not exceed 2 percent of the distance from the source to the center of the visually defined field when the surface upon which it appears is perpendicular to the axis of the X-ray beam. The Agency may grant an exemption on non-certified X-ray systems, provided the registrant makes a written application for such exemption and in that application:

(1) Demonstrates that it is impractical to comply with these requirements, and

(2) Describes what other means will be used to achieve the purpose of this paragraph.

(b) In addition to the requirements of Paragraph F.5.1 (a), all stationary X-ray systems shall meet the following requirements:

(1) Means shall be provided to indicate when the axis of the X-ray beam is perpendicular to the plane of the image receptor, to align the center of the X-ray field with respect to the center of the image receptor to within 2 percent of the SID, and to indicate the SID to within 2 percent;

(2) The beam-limiting device shall numerically indicate the field size in the plane of the image receptor to which it is adjusted; and

(3) Indication of field size dimensions and SID shall be specified in inches and/or centimeters, and shall be such that aperture adjustments result in X-ray field dimensions in the plane of the image receptor which correspond to those indicated by the beam limiting device to within 2 percent of the SID when the beam axis is indicated to be perpendicular to the plane of the image receptor.

(c) X-ray equipment designed for only one image receptor size at a fixed SID shall be provided with means to limit the field at the plane of the image receptor to dimensions no greater than those of the image receptor, and to align the center of the X-ray field with the center of the image receptor to within 2 percent of the SID.

(d) Radiographic systems other than those designated in Paragraphs F.5.1(a)-(c) above shall be provided with means to limit the X-ray field in the plane of the image receptor so that such field does not exceed each dimension of the image receptor by more than 2 percent of the SID when the axis of the X-ray beam is perpendicular to the plane of the image receptor. Means shall also be provided to align the center of the X-ray field with the center of the image receptor to within 2 percent of the SID. These requirements may be met with a system that meets the requirements for a general purpose X-ray system as specified in Paragraph F.5.1 (a) or, when alignment means are also provided, may be met with either:

(1) As assortment of removable, fixed-aperture, beam-limiting devices sufficient to meet the requirement for each combination of image receptor size and SID for which the unit is designed with each such device having clear and permanent markings to indicate the image receptor size and SID for which it is designed; or

(2) A beam-limiting device having multiple fixed apertures sufficient to meet the requirement for each combination of image receptor size and SID for which the unit is designed. Permanent, clearly legible markings shall indicate the image receptor size and SID for which each aperture is designed and shall indicate which aperture is in position for use.

(e) Portable X-ray systems shall have an evaluation of light field vs X-ray field alignment and actual vs indicated setting performed at least every 6 months to determine compliance with both F.5.1(a) and F.5.1(b)(3). Records must be maintained for all such evaluations.

YYYY

F.5.2 **Radiation Exposure Control Devices.**

(a) **Timers.** Means shall be provided to terminate the exposure at a preset time interval, preset product of current and time, a preset number of pulses, or a preset radiation exposure to the image receptor. In addition, it shall not be possible to make an exposure when the timer is set to a "**zero**" or "**off**" position if either position is provided. Except for dental panoramic systems, termination of exposure shall cause automatic resetting of the timer to its initial setting or to zero.

(b) **X-ray Control.** An X-ray control shall be incorporated into each X-ray system such that an exposure can be terminated by the operator at any time except for:

(1) Exposure of one-half second or less, or

(2) During serial radiography when means shall be provided to permit completion of any single exposure of the series in process. The X-ray control shall provide visual indication observable at or from the operator's protected position whenever X-rays are produced. In addition, a signal audible to the operator shall indicate that the exposure has terminated.

(c) Stationary X-ray systems shall be required to have the X-ray control permanently mounted in a protected area so that the operator is required to remain in that protected area during the entire exposure. Mobile and portable X-ray systems which are used for greater than one week in one location shall meet the requirements of this paragraph.

F.5.3 **Automatic EXPOSURE Controls.** When an automatic **EXPOSURE** control is provided:

(a) Indication shall be made on the control panel when this mode of operation is selected;

(b) If the X-ray tube potential is equal to or greater than 50 kVp, the minimum exposure time for field emission equipment rated for pulsed operation shall be equal to or less than a time interval equivalent to 2 pulses and the minimum exposure time for all other equipment shall be equal to or less than one-sixtieth second or a time interval required to deliver 5 mAs, whichever is greater;

(c) Either the product of peak X-ray tube potential, current, and exposure time shall be limited to not more than 60 kWs per exposure or the product of X-ray tube current and exposure time shall be limited to not more than 600 mAs per exposure except when the X-ray tube potential is less than 50 kVp in which case the product of X-ray tube current and exposure time shall be limited to not more than 2000 mAs per exposure; and

(d) A visible signal shall indicate when an exposure has been terminated at the limits required by Paragraph F.5.3(c), and manual resetting shall be required before further automatically timed exposures can be made.

F.5.4 **Reproducibility.** With a timer setting of 0.5 seconds or less, the average exposure period (T) shall be greater than or equal to 5 times the maximum exposure period (T_{max}) minus the minimum exposure period (T_{min}) when 4 timer tests are performed using the same timer setting:

$$\text{i.e., } T \geq 5\,(T_{max} - T_{min}).$$

F.5.5 **Source-to-Skin Distance.** All mobile radiographic systems shall be provided with a durable, securely fastened means to limit the source-to-skin distance to not less than 30 centimeters.

F.5.6 **EXPOSURE Reproducibility.** The coefficient of variation shall not exceed 0.10 when all technique factors are held constant. This requirement shall be deemed to have been met if, when four **EXPOSURE**S are made at identical technique factors, the value of the average **EXPOSURE** (E) is greater than or equal to 5 times the maximum **EXPOSURE** (E_{max}) minus the minimum **EXPOSURE** (E_{min});

i.e., $E \geq 5\ (E_{max} - E_{min})$.

YYYY

F.5.7 **Radiation from Capacitor Energy Storage Equipment in Standby Status.** Radiation emitted from the X-ray tube when the exposure switch or timer is not activated shall not exceed a rate of 2 milliroentgens per hour at 5 centimeters from any accessible surface of the diagnostic source assembly, with the beam-limiting device fully open.

F.5.8 **Additional Requirements Applicable to Certified Systems Only.**

(a) Diagnostic X-ray systems incorporating one or more certified components shall be required to comply with the requirement of Section F.3.2.

(b) **Transmission Limit for Image Receptor Supporting Devices Used for Mammography.** For X-ray systems manufactured after 5 September 1978 which are designed only for mammography, the transmission of the primary beam through any image receptor support provided with the system shall be limited such that the exposure 5 centimeters from any accessible surface beyond the plane of the image receptor supporting device does not exceed 0.1 milliroentgen (25.8 µC/kg) for each activation of the tube. Exposure shall be measured with the system operated at the minimum SID for which it is designed. Compliance shall be determined at the maximum rated peak tube potential for the system and at the maximum rated product of tube current and exposure time (mAs) for that peak tube potential. Compliance shall be determined by measurements averaged over an area of 100 square centimeters with no linear dimension greater than 20 centimeters.

F.5.9 **[RESERVED]**

[REMAINDER OF PAGE INTENTIONALLY LEFT BLANK]

F.6 INTRAORAL DENTAL X-RAY SYSTEMS

F.6.1 In addition to the provisions of Subparts F.2 and F.3, the requirements of Subpart F.6 apply to X-ray equipment and associated facilities used for dental radiography. Dental radiographic systems, when used with extraoral image receptors, shall conform to the requirements of Subpart F.5, except as specifically provided in Section F.6.10.

F.6.2 **Source-to-Skin Distance.** X-ray systems designed for use with an intraoral image receptor shall be provided with means to limit source-to-skin distance to not less than:

(1) 18 centimeters if operable above 50 kVp, or

(2) 10 centimeters if not operable above 50 kVp.

F.6.3 **Field Limitation.** Radiographic systems designed for use with an intraoral image receptor shall be provided with means to limit the X-ray field. If the minimum source-to-skin distance (SSD) is 18 centimeters or more, the X-ray field at the minimum SSD shall be containable in a circle having a diameter of no more than 7 centimeters. If the minimum SSD is less than 18 centimeters, the X-ray field at the minimum SSD shall be containable in a circle having a diameter of no more than 6 centimeters.

F.6.4 **Timers.** Means shall be provided to terminate the exposure at a preset time interval, preset product of current and time, a preset number of pulses, or a preset radiation exposure to the image receptor. In addition it shall not be possible to make an exposure when the timer is set to a "**zero**" or "**off**" position if either position is provided.

F.6.5 **Reproducibility.** With a timer setting of 0.5 seconds or less, the average exposure period (T) shall be greater than or equal to 5 times the maximum exposure period (T_{max}) minus the minimum exposure period (T_{min}) when 4 timer tests are performed using the same timer setting:

$$\text{i.e., } T \geq 5\,(T_{max} - T_{min}).$$

F.6.6 **X-ray Control.**

(a) An X-ray control shall be incorporated into each X-ray system such that an exposure can be terminated by the operator at any time, except for exposures of one-half second or less. The X-ray control shall provide visual indication whenever X-rays are produced. In addition, a signal audible to the operator shall indicate that the exposure has terminated.

(b) For stationary X-ray systems, it shall be required that the X-ray exposure switch be permanently mounted in a protected area, so that the operator is required to remain in that protected area during the entire exposure. In addition, if the visual indication of X-ray production required by Paragraph F.6.6(a) is not observable from the operator's protected position, a visual indication of X-ray production shall be provided at the location of the X-ray exposure switch. Mobile and portable X-ray systems which are used for greater than one week in one location shall meet the requirements of this paragraph.

F.6.7 **EXPOSURE Reproducibility.** The coefficient of variation shall not exceed 0.10 when all technique factors are held constant. This requirement shall be deemed to have been met, if when 4 **EXPOSURE**S are made at identical technique factors, the value of the average **EXPOSURE** (E) is greater than or equal to 5 times the maximum **EXPOSURE** (E_{max}) minus the minimum **EXPOSURE** (E_{min}):

$$\text{i.e., } E \geq 5\,(E_{max} - E_{min}).$$

YYYY

F.6.8 **Administrative Controls.**

(a) Patient and film holding devices shall be used when the techniques permit.

(b) Neither the tube housing nor the position indicating device shall be hand-held during an exposure.

(c) The X-ray system shall be operated in such a manner that the diameter of useful beam at the patient's skin does not exceed the requirements of Section F.6.3.

(d) Dental fluoroscopy without image intensification shall not be used.

F.6.9 **Additional Requirements Applicable to Certified Systems Only.** Diagnostic X-ray systems incorporating one or more certified components shall be required to comply with the requirements of Section F.3.2.

F.6.10 **Extraoral Procedures Utilizing Intraoral Dental X-ray Systems.** When X-ray equipment designed for use with intraoral image receptors is used in combination with an extraoral image receptor, the requirements of Subpart F.5 shall not apply, provided that:

(a) The procedure is conducted under the supervision of a licensed dental practitioner;

(b) The requirements of Subpart F.6 are met;

(c) A film and screen combination of the fastest speed consistent with the diagnostic objective of the examination is used;

(d) The image receptor used is positioned to show evidence that the X-ray field in the plane of the image receptor has been confined to the image receptor.

F.7 [RESERVED]

F.8 [RESERVED]

[REMAINDER OF PAGE INTENTIONALLY LEFT BLANK]

F.9 VETERINARY MEDICINE RADIOGRAPHIC INSTALLATIONS

F.9.1 **Equipment.**

(a) The protective tube housing shall be equivalent to the requirements of F.3.5.

(b) Diaphragms or cones shall be provided for collimating the useful beam to the area of clinical interest and shall provide the same degree of protection as is required of the housing.

(c) The total filtration permanently in the useful beam shall not be less than 0.5 millimeters aluminum equivalent for machines operating up to 50 kVp, 1.5 millimeters aluminum equivalent for machines operating between 50-70 kVp, and 2.5 millimeters aluminum equivalent for machines operating above 70 kVp.

(d) A device shall be provided to terminate the exposure after a preset time or exposure.

(e) A dead-man type of exposure switch shall be provided, together with an electrical cord of sufficient length, so that the operator can stand out of the useful beam and at least 6 feet from the animal during all X-ray exposures.

F.9.2 **Structural Shielding.** All wall, ceiling, and floor areas shall be equivalent to or provided with applicable protective barriers to assure compliance with A.2.3, A.2.9, and A.2.11 of these regulations.

F.9.3 **Operating Procedures.**

(a) The operator shall stand well away from the useful beam and the animal during radiographic exposures.

(b) No individual other than the operator shall be in the X-ray room while exposures are being made unless such individual's assistance is required.

(c) When an animal must be held in position during radiography, mechanical supporting or restraining devices should be used. If necessary, general anesthesia, sedation or tranquilization should be used. If the animal must be held by an individual, that individual shall be protected with appropriate shielding devices, such as protective gloves and apron, and he shall be so positioned that no part of his body will be struck by the useful beam. No individual shall be used routinely to hold animals or film during radiation exposures. The exposure of any individual used for this purpose shall be monitored, and a record shall be made of the examination, including the name of the human holder, date of the examination, number of exposures and technique factors utilized for the exposure(s).

[REMAINDER OF PAGE INTENTIONALLY LEFT BLANK]

F.10 COMPUTED TOMOGRAPHY SYSTEMS

F.10.1 **Requirements for Equipment.**

(a) **Applicability.** Unless otherwise specified, the requirements for equipment contained in Section F.10.1 are applicable to CT X-ray systems manufactured or remanufactured on or after 3 September 1985.

(b) **Termination of Exposure.**

(1) Means shall be provided to terminate the X-ray exposure automatically by either de-energizing the X-ray source or shuttering the X-ray beam in the event of equipment failure affecting data collection. Such termination shall occur within an interval that limits the total scan time to no more than 110 percent of its preset value through the use of either a backup timer or devices which monitor equipment function.

(2) A visible signal shall indicate when the X-ray exposure has been terminated through the means required by F.10.1(b)(1), and manual resetting of the CT conditions of operation shall be required prior to the initiation of another scan.

(3) The operator shall be able to terminate the X-ray exposure at any time during a scan, or series of scans under CT system control, of greater than one-half second duration.

(c) **Tomographic Plane Indication and Alignment.**

(1) For any single tomogram system, means shall be provided to permit visual determination of the tomographic plane or a reference plane offset from the tomographic plane.

(2) For any multiple tomogram system, means shall be provided to permit visual determination of the location of a reference plane. This reference plane can be offset from the location of the tomographic planes.

(3) If a device using a light source is used to satisfy F.10(c)(1) or (2), the light source shall provide illumination levels sufficient to permit visual determination of the location of the tomographic plane or reference plane under ambient light conditions of up to 500 lux.

(d) **Beam-On and Shutter Status Indicators and Control Switches.**

(1) Means shall be provided on the control console and on or near the housing of the scanning mechanism to provide visual indication when and only when X-rays are produced and, if applicable, whether the shutter is open or closed.

(2) Each emergency button or switch shall be clearly labeled as to its function.

(e) **Indication of CT Conditions of Operation.** The CT system shall be designed such that the CT conditions of operation to be used during a scan or a scan sequence shall be indicated prior to the initiation of a scan or scan sequence. On equipment having all or some of these conditions of operation at fixed values, this requirement may be met by permanent markings. Indication of CT conditions of operation shall be visible from any position from which scan initiation is possible.

(f) **Extraneous Radiation.** When data are being collected for image production, the radiation adjacent to the tube port shall not exceed that permitted by F.3.5.

(g) **Maximum Surface CTDI Identification.** The angular position where the maximum surface CTDI occurs shall be identified to allow for reproducible positioning of a CT dosimetry phantom.

(h) **Additional Requirements Applicable to CT X-Ray Systems Containing a Gantry.**

(1) The total error in the indicated location of the tomographic plane or reference plane shall not exceed 5 millimeters.

(2) If the X-ray production period is less than one-half second, the indication of X-ray production shall be actuated for at least one-half second. Indicators at or near the gantry shall be discernible from any point external to the patient opening where insertion of any part of the human body into the primary beam is possible.

(3) The deviation of indicated scan increment versus actual increment shall not exceed plus or minus 1 millimeter with any mass from 0 to 100 kilograms resting on the support device. The patient support device shall be incremented from a typical starting position to the maximum incremented distance or 30 centimeters, whichever is less, and then returned to the starting position. Measurement of actual versus indicated scan increment may be taken anywhere along this travel.

(4) Premature termination of the X-ray exposure by the operator shall necessitate resetting of the CT conditions of operation prior to the initiation of another scan.

F.10.2 **Facility Design Requirements.**

(a) **Aural Communication.** Provision shall be made for two-way aural communication between the patient and the operator at the control panel.

(b) **Viewing Systems.**

(1) Windows, mirrors, closed-circuit television, or an equivalent shall be provided to permit continuous observation of the patient during irradiation and shall be so located that the operator can observe the patient from the control panel.

(2) When the primary viewing system is by electronic means, an alternate viewing system (which may be electronic) shall be available for use in the event of failure of the primary viewing system.

F.10.3 **Surveys, Calibrations, Spot Checks, and Operating Procedures.**

(a) **Surveys.**

(1) All CT X-ray systems installed after 1 August 1991 and those systems not previously surveyed shall have a survey made by, or under the direction of, a person registered with the Agency to provide Diagnostic X-ray Physics Services. In addition, such surveys shall be done after any change in the facility or equipment which might cause a significant increase in radiation hazard.

(2) The registrant shall obtain a written report of the survey from the person registered with the Agency to provide Diagnostic X-ray Physics Services, and a copy of the report shall be made available to the Agency upon request.

(b) **Radiation Calibrations.**

(1) The calibration of the radiation output of the CT X-ray system shall be performed by, or under the direction of, a person registered with the Agency to provide Diagnostic X-ray Physics Services.

(2) The calibration of the radiation output of a CT X-ray system shall be performed at least annually. Calibration shall also be performed following installation of the system in a new location and/or replacement of the X-ray tube or other components which could cause a change in the radiation output.

(3) The calibration of the radiation output of a CT X-ray system shall be performed with a calibrated dosimetry system. The calibration of such a system shall be traceable to a national standard either directly or indirectly through intercomparison with a dosimetry system whose calibration is directly traceable to a national standard. The dosimetry system shall have been calibrated or intercompared within the preceding 2 years, or after servicing

which may have affected calibration. Such intercomparisons shall be performed under the supervision of a person registered with the Agency to provide Diagnostic X-ray Physics Services.

YYYY

(4) CT dosimetry phantom(s) shall be used in determining the radiation output of a CT X-ray system. Such phantom(s) shall meet the following specifications and conditions of use:

(i) CT dosimetry phantom(s) shall be right circular cylinders of polymethyl methacrylate of density 1.19 plus or minus 0.01 grams per cubic centimeter. The phantom(s) shall be at least 14 centimeters in length and shall have diameters of 32.0 centimeters for testing CT X-ray systems designed to image any section of the body and 16.0 centimeters for systems designed to image the head or for whole body scanners operated in the head scanning mode.

(ii) CT dosimetry phantom(s) shall provide means for the placement of a dosimeter(s) along the axis of rotation and along a line parallel to the axis of rotation 1.0 centimeter from the outer surface and within the phantom. Means for the placement of dosimeters or alignment devices at other locations may be provided.

(iii) Any effects on the doses measured due to the removal of phantom material to accommodate dosimeters shall be accounted for through appropriate corrections to the reported data or included in the statement of maximum deviation for the values obtained using the phantom.

(iv) All dose measurements shall be performed with the CT dosimetry phantom placed on the patient couch or support device without additional attenuation materials present.

(5) The calibration shall be required for each type of head, body, or whole-body scan performed at the facility.

(6) Calibration shall meet the following requirements:

(i) The dose profile along the center axis of the CT dosimetry phantom for the minimum, maximum, and midrange values of the nominal tomographic section thickness used by the registrant shall be obtained from the manufacturer. Where less than three nominal tomographic thicknesses can be selected, the dose profile determination shall be performed for each available nominal tomographic section thickness.

(ii) The CTDI[2] along the two axes specified in F.10.3(b)(4)(ii) shall be measured. The CT dosimetry phantom shall be oriented so that the measurement point 1.0 centimeter from the outer surface and within the phantom is in the same angular position within the gantry as the point of maximum surface CTDI identified. The CT conditions of operation shall correspond to typical values used by the registrant.

(iii) The spot checks specified in F.10.3(c) shall be made.

(7) Records of calibrations performed shall be maintained for inspection by the Agency.

(c) **<u>Spot Checks</u>.**

(1) The spot-check procedures shall be in writing and shall have been developed, in accordance with the equipment manufacturer's specifications, by a person registered with the Agency to provide Diagnostic X-ray Physics Services.

(2) The spot-check procedures shall incorporate the use of a CT phantom which has a capability of providing an indication of contrast scale, noise, nominal tomographic section thickness, the resolution capability of the system for low and high contrast objects, and measuring the mean CTN for water or other reference material.

---

[2] F. . . . . CTDI. . . . . .

(3) All spot checks shall be included in the calibration required by F.10.3(b) and at time intervals and under system conditions specified by a person registered with the Agency to provide Diagnostic X-ray Physics Services.

(4) Spot checks shall include acquisition of images obtained with the CT phantom(s) using the same processing mode and CT conditions of operation as are used to perform calibrations required by F.10.3(b). The images shall be retained, until a new calibration is performed, in two forms as follows:

(i) photographic copies of the images obtained from the image display device; and

(ii) images stored in digital form on a storage medium compatible with the CT X-ray system.

(5) Written records of the spot checks performed shall be maintained for inspection by the Agency.

(d) **Operating Procedures.**

(1) The CT X-ray system shall not be operated except by an individual who has completed the current in-service training program.

(2) Information shall be available at the control panel regarding the operation and calibration of the system. Such information shall include the following:

(i) dates of the latest calibration and spot checks and the location within the facility where the results of those tests may be obtained;

(ii) instructions for performing spot checks, including a schedule of spot checks appropriate for the system, allowable variations for the indicated parameters, and the results of at least the most recent spot checks conducted on the system;

(iii) the distance in millimeters between the tomographic plane and the reference plane if a reference plane is utilized; and

(iv) a current technique chart available at the control panel which specifies for each routine examination the CT conditions of operation and the number of scans per examination.

(3) If the calibration or spot check of the CT X-ray system identifies that a system operating parameter has exceeded a tolerance established by a person registered with the Agency to provide Diagnostic X-ray Physics Services, the registrant shall initiate appropriate corrective action.

[REMAINDER OF PAGE INTENTIONALLY LEFT BLANK]

F.11 MAMMOGRAPHY

F.11.1 **Applicability.**

(a) The provisions of this subpart are in addition to, and not in substitution for, other applicable provisions of these regulations.

(b) In addition to the requirements contained in these regulations, all aspects of Mammography services shall be managed in accordance with the provisions of the Rules & Regulations related to Quality Assurance Standards for Mammography (R23-1-MAM) of the Rhode Island Department of Health and applicable U.S. Food and Drug Mammography Quality Standards Act (FDA/MQSA) requirements.

F.11.2 **Technical Requirements.**

(a) **Purpose and Scope.** This subpart establishes technical requirements for X-ray systems, X-ray film processors, phantom imaging, mammography operator training, measurement of mammographic doses and establishment of Quality Assurance Programs at all facilities providing mammographic imaging services.

(b) **X-ray System Requirements.** All X-ray systems used for mammographic imaging shall comply with, as a minimum, the following technical specifications:

(1) The X-ray system shall be designated by its manufacturer solely for use with xerography or mammographic film/screen.

(2) The X-ray system shall be equipped with compression devices which will effectively immobilize the breast.

(3) The X-ray system shall be equipped with a Molybdenum target/Molybdenum filtration combination for all film/screen modalities, or Tungsten target/Aluminum filtration for xerography. Any other target/ filtration combination must be consistent with applicable FDA/ MQSA requirements.

(4) The X-ray system focal spot size shall be maintained in accordance with the most current FDA/ MQSA requirements.

(5) The X-ray system shall have the capability of using anti-scatter grids which have been specifically designed for the mammographic (film/screen) imaging modality being utilized.

(6) All X-ray systems purchased after 15 January 1991 shall have the capability of automatic exposure control (AEC) for all film/screen imaging modalities.

(c) **X-Ray Film Processor Requirements.** Each mammographic imaging facility shall ensure that any X-ray film processor used for processing mammographic images at said facility is in compliance with, as a minimum, the following technical requirements:

(1) The processing parameters (e.g. processing temperature, cycle time, replenishment, etc.) shall be optimized to meet the manufacturer's requirements for the specific film being used for mammographic imaging.

(2) The processing parameters shall be commensurate with the workload of the facility to ensure processing with viable chemistry.

(d) **Xerography Conditioner and Processor Requirements.** Each mammographic imaging facility performing xerography shall ensure that the conditioner and processor is optimized to meet the manufacturer's requirements for the specific mode used for xerographic imaging of the breasts.

(e) **Phantom Imaging Requirements.** The phantom images shall meet the evaluation criteria for mammography accreditation established by the American College of Radiology (ACR). The

current ACR criteria is based on the RMI 156 phantom.

(f) **Measurement of Average Glandular Dose.**

(1) The average glandular dose for one (1) craniocaudal view of a 4.5 centimeter compressed breast [fifty percent (50%) adipose and fifty percent (50%) glandular tissue] shall be measured by a person registered with the Agency to provide Diagnostic X-ray Physics Services to Mammography Facilities. This measurement shall be made:

(i) Prior to the first use of the unit for mammographic imaging of humans;

(ii) Following each replacement of the X-ray tube;

(iii) Following any repair or replacement of major X-ray system components that may affect the output of the X-ray tube; and

(iv) At intervals not to exceed one (1) year.

(2) The average measured glandular dose per view shall not exceed the following parameters:

(i) 100 millirad (1.0 mGy) for film screen units without grids;

(ii) 300 millirad (3.0 mGy) for film/screen units with grids, or Xerox 175 systems;

(iii) 400 millirad (4.0 mGy) for Xerox 125 or 126 systems.

(3) The written record of the results of all measurements required by Paragraph F.11.2 (f)(1) above shall be maintained and shall include, as a minimum, average glandular dose (mrad), the name of the person performing the measurements, the date the measurements were performed, identification of the phantom(s) used to obtain such results, and the technique factors used to determine such results. Results of these measurements shall be posted where any mammographic operator shall have ready access to such results while operating the mammographic X-ray unit and also filed with the records required by Paragraph F.2.13(e) of the RI Rules and Regulations for the Control of Radiation.

(g) **Evaluation of the Adequacy and Effectiveness of the Overall Imaging Program.**

(1) Each mammographic imaging facility shall develop and implement an ongoing Quality Assurance Program specific to mammographic imaging.

(i) The Quality Assurance Program shall be developed and conducted by a Radiologist, as qualified in Section 3.0 of the Rules & Regulations related to Quality Assurance Standards for Mammography (R23-1-MAM), in conjunction with a person registered with the Agency to provide Diagnostic X-ray Physics Services to Mammography Facilities.

(ii) This Quality Assurance Program shall be performed by an ARRT registered Radiologic Technologist who has had specific training, which is acceptable to the Agency and covers Quality Assurance procedures for both the radiographic and processing systems.

(2) The Quality Assurance Program shall also include a written procedures manual which describes in detail the tests to be performed, the frequency for each test, the criteria for acceptability of each test and the actions to be taken when test results are outside the established criteria. A log shall be kept listing the results of all Quality Assurance testing and the actions taken to correct any problems uncovered by testing.

(3) The Quality Assurance Program shall be reviewed by a Radiologist, as qualified in Section 3.0 of the Rules & Regulations related to Quality Assurance Standards for Mammography (R23-1-MAM), in conjunction with a person registered with the Agency to provide Diagnostic X-ray Physics Services to Mammography Facilities. This review shall take place at intervals not to exceed one (1) year and shall be documented in writing.

(4) The minimum Quality Assurance testing parameters and frequencies are listed in Appendix C to this part.

YYYY

PART F

APPENDIX A

INFORMATION TO BE SUBMITTED BY PERSONS PROPOSING TO CONDUCT HEALING ARTS SCREENING

Persons requesting that the Agency approve a healing arts screening program shall submit the following information and evaluation:

1. Name and address of the applicant and where applicable, the names and addresses of agents within this State.

2. Diseases or conditions for which the X-ray examinations are to be used.

3. Description in detail of the X-ray examinations proposed in the screening program.

4. Description of the population to be examined in the screening program, i.e., age, sex, physical condition, and other appropriate information.

5. An evaluation of any known alternate methods not involving ionizing radiation which could achieve the goals of the screening program and why these methods are not used in preference to the X-ray examinations.

6. An evaluation by a qualified expert of the X-ray system(s) to be used in the screening program. The evaluation by the qualified expert shall show that such system(s) do satisfy all requirements of these regulations.

7. A description of the diagnostic film quality control program.

8. A copy of the technique chart for the X-ray examination procedures to be used.

9. The qualifications of each individual who will be operating the X-ray system(s).

10. The qualifications of each individual who will be supervising the operators of the X-ray system(s). The extent of supervision and the method of work performance evaluation shall be specified.

11. The name and address of the individual who will interpret the radiograph(s).

12. A description of the procedures to be used in advising the individuals screened and their private practitioners of the healing arts of the results of the screening procedure and any further medical needs indicated.

13. A description of the procedures for the retention or disposition of the radiographs and other records pertaining to the X-ray examinations.

PART F

APPENDIX B

INSTRUCTION OF USERS OF X-RAY EQUIPMENT IN THE HEALING ARTS

I. **Fundamentals of Radiation Safety**

A. Characteristics of x-radiation
B. Units of radiation dose (mrem)
C. Hazards of excessive exposure to radiation
D. Levels of radiation from sources of radiation
E. Methods of controlling radiation dose

1. Working time
2. Working distances
3. Shielding

II. **Radiation Detection Instrumentation to be Used**

A. Radiation survey instruments

1. Operation
2. Calibration
3. Limitations

B. Survey, monitoring and spot-check techniques
C. Personnel monitoring devices

1. Film badges
2. Pocket dosimeters
3. Thermoluminescent dosimeters

D. Interpretation of personnel monitoring reports

III. **Operation and Control of X-ray Equipment**

A. Collimation and Filtration
B. Exposure techniques for the equipment used
C. Film processing techniques
D. Anatomy and positioning

1. Relevant human anatomy
2. Relevant human physiology
3. Radiographic positioning

IV. **The requirements of pertinent federal and state regulations**

V. **The licensee's or registrant's written operating and emergency procedures**

PART F

APPENDIX C

MINIMUM QUALITY ASSURANCE TESTING PARAMETERS AND FREQUENCIES

1. **X-RAY EQUIPMENT PARAMETERS.** The following X-ray equipment parameters must be checked after any changes in exposure technique and/or imaging modality, major repair/replacement of X-ray system components, as required by Section F.11.2 of these regulations, and at intervals not to exceed one (1) year.

(a) Measurement of Average Glandular Dose

(b) Half-Value Layer (HVL)

(c) Accuracy and Reproducibility of kVp Stations

(d) Accuracy and Reproducibility of Timer Stations (If Applicable)

(e) Linearity and Reproducibility of mA Stations (If Applicable)

(f) Reproducibility of X-ray Output in AEC and Manual Modes

(g) Accuracy of Source-to-Film Distance Indicators (If Applicable)

(h) Light/X-ray Field Congruence (If Applicable)

(i) Accuracy of Thickness Indicator on Compression Device

(j) Verification of Back-up Timer for AEC Operation

2. **PROCESSOR PARAMETERS:**

(a) The following film processor parameters must be checked at intervals not to exceed those specified below:

	PARAMETER	FREQUENCY
(1)	Speed Index Consistency	Daily
(2)	Contrast Index Consistency	Daily
(3)	Base Plus Fog Consistency	Daily
(4)	Developer Solution Temperature	Daily
(5)	Film Fogging, Light Leaks and Safelight Filter Condition and Location	Six (6) Months
(6)	Processor Artifact Identification	Continuous
(7)	Processor Maintenance/Cleaning	Manufacturers' Recommendations

(b) The following xeroradiographic conditioner/processor parameters must be checked at intervals not to exceed those specified below:

	PARAMETER	FREQUENCY
(1)	Dark Dusting	Weekly

3. **EQUIPMENT CONDITION PARAMETERS.** The following equipment condition parameters must be checked at intervals not to exceed those specified below:

	PARAMETER	FREQUENCY
(a)	Screen Condition Evaluated	Daily
(b)	Screens Cleaned	As Required
(c)	Screen/Film Contact Evaluated	Semi-Annually and When Changed
(d)	Screen Artifact Identification	Continuous
(e)	Viewbox Light Output Consistency Between Viewboxes and Over Time	Annual
(f)	Label Cassettes	On Receipt and As Needed
(g)	Xerography	
(1)	Clean Aluminized Mylar Foil In Cassette	Weekly
(2)	X-ray Sponges	Weekly

4. **SYSTEM CHECKS.** The following system checks must be performed at intervals not to exceed those specified below:

	PARAMETER	FREQUENCY
(a)	Phantom Imaging	Initial Baseline and After Major Repair or Change in Film/Screen
(b)	Comparison of Phantom Image Quality to Initial Baseline and Minimum Phantom Imaging Criteria	Monthly

[REMAINDER OF PAGE INTENTIONALLY LEFT BLANK]

RULES AND REGULATIONS FOR THE CONTROL OF RADIATION

(R23-1.3-RAD)

PART G

RADIATION SAFETY REQUIREMENTS FOR MICROWAVE OVENS

JUNE 1978

PART G
RADIATION SAFETY REQUIREMENTS FOR MICROWAVE OVENS

G.1 PURPOSE AND SCOPE

The regulations in this part establish radiation safety requirements for microwave ovens which are designed to heat, cook, or dry food through the application of electromagnetic energy at frequencies assigned by the Federal Communications Commission in the normal ISM heating bands ranging from 890 megahertz to 6,000 megahertz.

G.2 PERFORMANCE STANDARDS

Microwave ovens manufactured after October 6, 1971, shall be maintained in compliance with the applicable federal performance standards for microwave ovens in Title 21, Code of Federal Regulations, Chapter I, Subchapter J.

G.3 POWER DENSITY LIMITS

G.3.1(a) The power density of the microwave radiation emitted by any microwave oven manufactured after October 6, 1971, shall not exceed one (1) milliwatt per square centimeter at any point 5 centimeters or more from the external surface of the oven, measured prior to acquisition by a purchaser, and thereafter, 5 milliwatts per square centimeter at any point 5 centimeters or more from the external surface of the oven.

(b) For ovens manufactured on or before October 6, 1971, the power density of the emitted microwave radiation shall not exceed 10 milliwatts per square centimeter at any point 5 centimeters or more from the external surface of the oven.

G.4 NON-COMPLIANCE

Any microwave oven which fails to meet the requirements of this part shall be removed from service until the repairs or modifications necessary to meet the applicable standard(s) have been made.

RULES AND REGULATIONS FOR THE CONTROL OF RADIATION

(R23-1.3-RAD)

PART H

THERAPEUTIC RADIATION MACHINES

June 1999

PART H
THERAPEUTIC RADIATION MACHINES

H.1 SCOPE AND APPLICABILITY

H.1.1 **Purpose, Scope, Provisions for Research Involving Human Subjects and FDA, Other Federal and State Requirements.**

(a) **Scope.** This Part establishes requirements, for which the registrant is responsible, for use of therapeutic radiation machines. The provisions of this Part are in addition to, and not in substitution for, other applicable provisions of these regulations.

(b) The use of therapeutic radiation machines shall be by, or under the supervision of, a licensed practitioner of the healing arts who meets the training/experience criteria established by H.3.3.

(c) **Provisions for Research Involving Human Subjects.** A registrant may conduct research involving human subjects using therapeutic radiation machines provided that the research is conducted, funded, supported, or regulated by a Federal Agency which has implemented the Federal Policy for the Protection of Human Subjects. Otherwise, a registrant shall apply for and receive approval of a specific amendment to its Agency registration before conducting such research. Both types of registrants shall, at a minimum, obtain informed consent from the human subjects and obtain prior review and approval of the research activities by an "Institutional Review Board" in accordance with the meaning of these terms as defined and described in the Federal Policy for the Protection of Human Subjects.

(d) **FDA, Other Federal and State Requirements.** Nothing in this Part relieves the registrant from complying with applicable FDA, other federal, and State requirements governing therapeutic radiation machines or auxiliary devices.

H.2 DEFINITIONS

Whenever used in this Part, the following terms shall be construed as follows:

Absorbed dose (D) means the mean energy imparted by ionizing radiation to matter. Absorbed dose is determined as the quotient of dE by dM, where dE is the mean energy imparted by ionizing radiation to matter of mass dM. The SI unit of absorbed dose is joule per kilogram and the name of the unit of absorbed dose is the gray (Gy). The previously used special unit of absorbed dose (rad) is being replaced by the gray.

Absorbed dose rate means absorbed dose per unit time, for machines with timers, or dose monitor unit per unit time for linear accelerators.

Accessible surface means surface of equipment or of an equipment part that can be easily or accidentally touched by persons without the use of a tool.

Added filtration means any filtration which is in addition to the inherent filtration.

Air kerma (K) means the kinetic energy released in air by ionizing radiation. Kerma is determined as the quotient of dE by dM, where dE is the sum of the initial kinetic energies of all the charged ionizing particles liberated by uncharged ionizing particles in air of mass dM. The SI unit of air kerma is joule per kilogram and the name for the unit of kerma is the gray (Gy).

Barrier (See "Protective barrier").

Beam axis means the axis of rotation of the beam limiting device.

Beam-limiting device means a field defining collimator, integral to the therapeutic radiation machine, which provides a means to restrict the dimensions of the useful beam.

H.2

Beam monitoring system means a system designed and installed in the radiation head to detect and measure the radiation present in the useful beam.

Beam scattering foil means a thin piece of material (usually metallic) placed in the beam to scatter a beam of electrons in order to provide a more uniform electron distribution in the useful beam.

Bent beam linear accelerator means a linear accelerator geometry in which the accelerated electron beam must change direction by passing through a bending magnet.

Changeable filters means any filter, exclusive of inherent filtration, which can be removed from the useful beam through any electronic, mechanical, or physical process.

Contact therapy system means a therapeutic radiation machine with a short target to skin distance (TSD), usually less than 5 centimeters.

Detector (See "Radiation detector").

Dose Equivalent (H_T) means the product of the absorbed dose in tissue, quality factor, and all other necessary modifying factors at the location of interest. The units of dose equivalent are the Sievert (Sv) and rem.

Dose monitor unit (DMU) means a unit response from the beam monitoring system from which the absorbed dose can be calculated.

External beam radiation therapy means therapeutic irradiation in which the source of radiation is at a distance from the body.

Field-flattening filter means a filter used to homogenize the absorbed dose rate over the radiation field.

Filter means material placed in the useful beam to change beam quality in therapeutic radiation machines subject to Subpart H.6.

Gantry means that part of a radiation therapy system supporting and allowing movements of the radiation head about a center of rotation.

Gray (Gy) means the SI unit of absorbed dose, kerma, and specific energy imparted equal to 1 joule per kilogram. The previous special unit of absorbed dose (rad) is being replaced by the gray. [1 Gy=100 rad].

Half-value layer (HVL) means the thickness of a specified material which attenuates X-radiation or gamma radiation to an extent such that the air kerma rate, exposure rate or absorbed dose rate is reduced to one-half of the value measured without the material at the same point.

Interlock means a device preventing the start or continued operation of equipment unless certain predetermined conditions prevail.

Interruption of irradiation means the stopping of irradiation with the possibility of continuing irradiation without resetting of operating conditions at the control panel.

Irradiation means the exposure of a living being or matter to ionizing radiation.

Isocenter means the center of the sphere through which the useful beam axis passes while the gantry moves through its full range of motions.

Kilo electron volt (keV) means the energy equal to that acquired by a particle with one electron charge in passing through a potential difference of one thousand volts in a vacuum. [Note: current convention is to use kV for photons and keV for electrons.]

Lead equivalent means the thickness of the material in question affording the same attenuation, under specified conditions, as lead.

Leakage radiation means radiation emanating from the radiation therapy system except for the useful beam.

Light field means the area illuminated by light, simulating the radiation field.

mA means milliampere.

Mega electron volt (MeV) means the energy equal to that acquired by a particle with one electron charge in passing through a potential difference of one million volts in a vacuum. [Note: current convention is to use MV for photons and MeV for electrons.]

Monitor unit (MU) (See "Dose monitor unit").

Moving beam radiation therapy means radiation therapy with any planned displacement of radiation field or patient/human research subject relative to each other, or with any planned change of absorbed dose distribution. It includes arc, skip, conformal, intensity modulation and rotational therapy.

Nominal treatment distance means:

(1) For electron irradiation, the distance from the scattering foil, virtual source, or exit window of the electron beam to the entrance surface of the irradiated object along the central axis of the useful beam.

(2) For X-ray irradiation, the virtual source or target to isocenter distance along the central axis of the useful beam. For non-isocentric equipment, this distance shall be that specified by the manufacturer.

Patient means an individual subjected to machine produced external beam radiation for the purpose(s) of medical therapy.

Peak tube potential means the maximum value of the potential difference across the X-ray tube during an exposure.

Periodic quality assurance check means a procedure which is performed to ensure that a previous calibration continues to be valid.

Phantom means an object behaving in essentially the same manner as tissue, with respect to absorption or scattering of the ionizing radiation in question.

Practical range of electrons corresponds to classical electron range where the only remaining contribution to dose is from bremsstrahlung X-rays. A further explanation may be found in "Clinical Electron Beam Dosimetry: Report of AAPM Radiation Therapy Committee Task Group 25" [Medical Physics 18(1): 73-109, Jan/Feb 1991] and ICRU Report 35, "Radiation Dosimetry: Electron Beams with Energies Between 1 and 50 MeV", International Commission on Radiation Units and Measurements, September 15, 1984.

Primary dose monitoring system means a system which will monitor the useful beam during irradiation and which will terminate irradiation when a pre-selected number of dose monitor units have been delivered.

Primary protective barrier (See "Protective barrier").

Protective barrier means a barrier of radiation absorbing material(s) used to reduce radiation exposure. The types of protective barriers are as follows:

(1) "Primary protective barrier" means the material, excluding filters, placed in the useful beam.

(2) "Secondary protective barrier" means the material which attenuates stray radiation.

Radiation detector means a device which, in the presence of radiation provides, by either direct

or indirect means a signal or other indication suitable for use in measuring one or more properties or quantities of incident radiation.

H.2

Radiation field (See useful beam)

Radiation head means the structure from which the useful beam emerges.

Radiotherapy Physicist means an individual qualified in accordance with H.3.4.

Redundant beam monitoring system means a combination of two dose monitoring systems in which each system is designed to terminate irradiation in accordance with a pre-selected number of dose monitor units.

Scattered radiation means ionizing radiation emitted by interaction of ionizing radiation with matter, the interaction being accompanied by a change in direction of the radiation. Scattered primary radiation means that scattered radiation which has been deviated in direction only by materials irradiated by the useful beam.

Secondary dose monitoring system means a system which will terminate irradiation in the event of failure of the primary dose monitoring system.

Secondary protective barrier (See "Protective barrier").

Shadow tray means a device attached to the radiation head to support auxiliary beam blocking material.

Shutter means a device attached to the tube housing assembly which can totally intercept the useful beam and which has a lead equivalency not less than that of the tube housing assembly.

Sievert (Sv) means the SI unit of dose equivalent. The unit of dose equivalent is the joule per kilogram. The previous special unit of dose equivalent (rem) is being replaced by the sievert. [1 Sv=100 rem].

Simulator (radiation therapy simulation system) means any X-ray system intended for localizing the volume to be exposed during radiation therapy and reproducing the position and size of the therapeutic irradiation field.

Source means the region and/or material from which the radiation emanates.

Source-skin distance (SSD) [See Target-skin distance]

Stationary beam radiation therapy means radiation therapy without displacement of one or more mechanical axes relative to the patient/human reseach subject during irradiation.

Stray radiation means the sum of leakage and scattered radiation.

Target means that part of an X-ray tube or accelerator onto which is directed a beam of accelerated particles to produce ionizing radiation or other particles.

Target-skin distance (TSD) means the distance measured along the beam axis from the center of the front surface of the X-ray target and/or electron virtual source to the surface of the irradiated object or patient/ human research subject.

Tenth-value layer (TVL) means the thickness of a specified material which attenuates X-radiation or gamma radiation to an extent such that the air kerma rate, exposure rate or absorbed dose rate is reduced to one-tenth of the value measured without the material at the same point.

Termination of irradiation means the stopping of irradiation in a fashion which will not permit continuance of irradiation without the resetting of operating conditions at the control panel.

Therapeutic radiation machine means X-ray or electron-producing equipment designed and used for external beam radiation therapy.

Tube means an X-ray tube, unless otherwise specified.

Tube housing assembly means the tube housing with tube installed. It includes high-voltage and/or filament transformers and other appropriate elements when such are contained within the tube housing.

Useful beam means the radiation emanating from the tube housing port or the radiation head and passing through the aperture of the beam limiting device when the exposure controls are in a mode to cause the therapeutic radiation machine to produce radiation.

Virtual source means a point from which radiation appears to originate.

Wedge filter means a filter which effects continuous change in transmission over all or a part of the useful beam.

X-ray tube means any electron tube which is designed to be used primarily for the production of X-rays.

H.3 GENERAL ADMINISTRATIVE REQUIREMENTS FOR FACILITIES USING THERAPEUTIC RADIATION MACHINES

H.3.1 **Administrative Controls.** The registrant shall be responsible for directing the operation of the therapeutic radiation machines which have been registered with the Agency. The registrant or the registrant's agent shall ensure that the requirements of Part H are met in the operation of the therapeutic radiation machine(s).

H.3.2 A therapeutic radiation machine which does not meet the provisions of these regulations shall not be used for irradiation of patients/human research subjects.

H.3.3 **Training for External Beam Radiation Therapy Authorized Users.** The registrant for any therapeutic radiation machine subject to H.6 or H.7 shall require the authorized user to be a physician who:

(a) Is certified in:

(1) Radiology or therapeutic radiology by the American Board of Radiology; or

(2) Radiation oncology by the American Osteopathic Board of Radiology; or

(3) Radiology, with specialization in radiotherapy, as a British "Fellow of the Faculty of Radiology" or "Fellow of the Royal College of Radiology"; or

(4) Therapeutic radiology by the Canadian Royal College of Physicians and Surgeons; or

(b) Is in the active practice of therapeutic radiology, and has completed 200 hours of instruction in basic radiation techniques applicable to the use of an external beam radiation therapy unit, 500 hours of supervised work experience, and a minimum of 3 years of supervised clinical experience.

(1) To satisfy the requirement for instruction, the classroom and laboratory training shall include:

(i) Radiation physics and instrumentation;

(ii) Radiation protection;

(iii) Mathematics pertaining to the use and measurement of ionization radiation; and

(iv) Radiation biology.

(2) To satisfy the requirement for supervised work experience, training shall be under the supervision of an authorized user and shall include:

(i) Review of the full calibration measurements and periodic quality assurance checks;

(ii) Evaluation of prepared treatment plans and calculation of treatment times and patient/human research subject treatment settings;

(iii) Using administrative controls to prevent misadministrations;

(iv) Implementing emergency procedures to be followed in the event of the abnormal operation of a external beam radiation therapy unit or console; and

(v) Checking and using radiation survey meters.

(3) To satisfy the requirement for a period of supervised clinical experience, training shall include 1 year in a formal training program approved by the Residency Review Committee for Radiology of the Accreditation Council for Graduate Medical Education or the Committee on Postdoctoral Training of the American Osteopathic Association and an additional 2 years of clinical experience in therapeutic radiology under the supervision of an authorized user. The supervised clinical experience shall include:

(i) Examining individuals and reviewing their case histories to determine their suitability for external beam radiation therapy treatment, and any limitations/contraindications;

(ii) Selecting proper dose and how it is to be administered;

(iii) Calculating the external beam radiation therapy doses and collaborating with the authorized user in the review of patients'/human research subjects' progress and consideration of the need to modify originally prescribed doses and/or treatment plans as warranted by patients'/human research subjects' reaction to radiation; and

(iv) Post-administration follow-up & review of case histories.

(c) Notwithstanding the requirements of H.3.3(a) and H.3.3(b), the registrant for any therapeutic radiation machine subject to H.6 may also submit the training of the prospective authorized user physician for Agency review on a case-by-case basis.

(d) A physician shall not act as an authorized user for any therapeutic radiation machine until such time as said physician's training has been reviewed and approved by the Agency.

H.3.4 **Training for Radiotherapy Physicist.** The registrant for any therapeutic radiation machine subject to H.6 or H.7 shall require the Radiotherapy Physicist to:

(a) Be registered with the Agency, under the provisions of Part B of these regulations, as a provider of radiation services in the area of calibration and compliance surveys of external beam radiation therapy units. and

(b) Be certified by the American Board of Radiology in:

(1) Therapeutic radiological physics; or

(2) Roentgen-ray and gamma-ray physics; or

(3) X-ray and radium physics; or

(4) Radiological physics; or

(c) Be certified by the American Board of Medical Physics in Radiation Oncology Physics; or

(d) Be certified by the Canadian College of Medical Physics; or

H.3.4(e)

(e) Hold a master's or doctor's degree in physics, biophysics, radiological physics, or health physics, and have completed 1 year of full time training in therapeutic radiological physics and also 1 year of full time work experience under the supervision of a Radiotherapy Physicist at a medical institution. To meet this requirement, the individual shall have performed the tasks listed in H.4.1, H.6.16/H.7.20, and H.6.17/H.7.21 under the supervision of a Radiotherapy Physicist during the year of work experience.

(f) Notwithstanding the provisions of H.3.4(e), certification pursuant to H.3.4(b), H.3.4(c), and/or H.3.4(d) shall be required on or before 31 December 1999 for all persons currently qualifying as a Radiotherapy Physicist pursuant to H.3.4(e).

H.3.5 **Qualifications of Operators.**

(a) Individuals who will be operating a therapeutic radiation machine for medical use shall possess a current license as a Radiation Therapist in accordance with the Rules and Regulations for the Licensure of Radiographers, Nuclear Medicine Technologists and Radiation Therapists [R5-68-RAD] of the Rhode Island Department of Health, unless the individual is specifically exempted from licensure by Section 6.0 of said regulations.

(b) The names and training of all personnel currently operating a therapeutic radiation machine shall be kept on file at the facility. Information on former operators shall be retained for a period of at least 2 years beyond the last date they were authorized to operate a therapeutic radiation machine at that facility.

H.3.6 Written safety procedures and rules shall be developed by a Radiotherapy Physicist and shall be available in the control area of a therapeutic radiation machine, including any restrictions required for the safe operation of the particular therapeutic radiation machine. The operator shall be able to demonstrate familiarity with these rules.

H.3.7 Individuals shall not be exposed to the useful beam except for medical therapy purposes and unless such exposure has been ordered in writing by a licensed practitioner of the healing arts who is specifically identified on the Certificate of Registration. This provision specifically prohibits deliberate exposure of an individual for training, demonstration or other non-healing-arts purposes.

H.3.8 **Visiting Authorized User.** Notwithstanding the provisions of H.3.7, a registrant may permit any physician to act as a visiting authorized user under the term of the registrant's Certificate of Registration for up to 60 days per calendar year under the following conditions:

(a) The visiting authorized user has the prior written permission of the registrant's management and, if the use occurs on behalf of an institution, the institution's Radiation Safety Committee.

(b) The visiting authorized user meets the requirements established for authorized user(s) in H.3.3(a) and H.3.3(b). and

(c) The registrant maintains copies of all records specified by H.3.8 for 5 years from the date of the last visit.

H.3.9 All individuals associated with the operation of a therapeutic radiation machine shall be instructed in and shall comply with the provisions of the registrant's quality management program. In addition to the requirements of Part H, these individuals are also subject to the requirements of A.2.3, A.2.7 and A.3.3.

H.3.10 **Information and Maintenance Record and Associated Information.** The registrant shall maintain the following information in a separate file or package for each therapeutic radiation machine, for inspection by the Agency:

H.3.10(a)

(a) Report of acceptance testing.

(b) Records of all surveys, calibrations, and periodic quality assurance checks of the therapeutic radiation machine required by Part H, as well as the name(s) of person(s) who performed such activities.

(c) Records of maintenance and/or modifications performed on the therapeutic radiation machine after 1 August 1978 as well as the name(s) of person(s) who performed such services.

(d) Signature of person authorizing the return of therapeutic radiation machine to clinical use after service, repair, or upgrade.

H.3.11 **Records Retention.** All records required by Part H shall be retained until disposal is authorized by the Agency unless another retention period is specifically authorized in Part H. All required records shall be retained in an active file from at least the time of generation until the next Agency inspection. Any required record generated prior to the last Agency inspection may be microfilmed or otherwise archived as long as a complete copy of said record can be retrieved until such time as the Agency authorizes final disposal.

H.4 GENERAL TECHNICAL REQUIREMENTS FOR FACILITIES USING THERAPEUTIC RADIATION MACHINES

H.4.1 **Protection Surveys.**

(a) The registrant shall ensure that radiation protection surveys of all new facilities, and existing facilities not previously surveyed are performed with an operable radiation measurement survey instrument calibrated in accordance with H.8. The radiation protection survey shall be performed by, or under the direction of, a Radiotherapy Physicist or a Certified Health Physicist and shall verify that, with the therapeutic radiation machine in a "BEAM-ON" condition, with the largest clinically available treatment field and with a scattering phantom in the useful beam of radiation:

(1) Radiation levels in restricted areas are not likely to cause personnel exposures in excess of the limits specified in A.2.3(a); and

(2) Radiation levels in unrestricted areas do not exceed the limits specified in A.2.11(a) and A.2.11(b).

(b) In addition to the requirements of H.4.1(a), a radiation protection survey shall also be performed prior to any subsequent medical use and:

(1) After making any change in the treatment room shielding;

(2) After making any change in the location of the therapeutic radiation machine within the treatment room;

(3) After relocating the therapeutic radiation machine; or

(4) Before using the therapeutic radiation machine in a manner that could result in increased radiation levels in areas outside the external beam radiation therapy treatment room.

(c) The survey record shall indicate all instances where the facility, in the opinion of the Radiotherapy Physicist or a Certified Health Physicist, is in violation of applicable regulations. The survey record shall also include the date of the measurements, the reason the survey is required, the manufacturer's name, model number and serial number of the therapeutic radiation machine, the instrument(s) used to measure radiation levels, a plan of the areas surrounding the treatment room that were surveyed, the measured dose rate at several points in each area expressed in microsieverts or millirems per hour, the calculated maximum level of radiation over a period of 1

week for each restricted and unrestricted area, and the signature of the individual responsible for conducting the survey.

H.4.1(d)

(d) If the results of the surveys required by H.4.1(a) or H.4.1(b) indicate any radiation levels in excess of the respective limit specified in H.4.1(a), the registrant shall lock the control in the "OFF" position and not use the unit:

(1) Except as may be necessary to repair, replace, or test the therapeutic radiation machine, the therapeutic radiation machine shielding, or the treatment room shielding; or

(2) Until the registrant has received a specific exemption from the Agency.

H.4.2 **Modification of Radiation Therapy Unit or Room Before Beginning a Treatment Program.** If the survey required by H.4.1 indicates that an individual in an unrestricted area may be exposed to levels of radiation greater than those permitted by A.2.11(a) and A.2.11(b), before beginning the treatment program the registrant shall:

(a) Either equip the unit with beam direction interlocks or add additional radiation shielding to ensure compliance with A.2.11(a) and A.2.11(b).

(b) Perform the survey required by H.4.1 again. and

(c) Include in the report required by H.4.4 the results of the initial survey, a description of the modification made to comply with H.4.2(a) and the results of the second survey. or

(d) Request and receive a registration amendment under A.2.11(c) that authorizes radiation levels in unrestricted areas greater than those permitted by A.2.11(a) and A.2.11(b).

H.4.3 **Dosimetry Equipment.**

(a) The registrant shall have a calibrated dosimetry system available for use. The system shall have been calibrated by the National Institute for Standards and Technology (NIST) or by an American Association of Physicists in Medicine (AAPM) Accredited Dosimetry Calibration Laboratory (ADCL). The calibration shall have been performed within the previous 24 months and after any servicing that may have affected system calibration.

(1) For beams with energies greater than 1 MV (1 MeV), the dosimetry system shall have been calibrated for Cobalt-60;

(2) For beams with energies equal to or less than 1 MV (1 MeV), the dosimetry system shall have been calibrated at an energy (energy range) appropriate for the radiation being measured;

(b) The registrant shall have available for use a dosimetry system for quality assurance check measurements. To meet this requirement, the system may be compared with a system that has been calibrated in accordance with H.4.3(a). This comparison shall have been performed within the previous 12 months and after each servicing that may have affected system calibration. The quality assurance check system may be the same system used to meet the requirement in H.4.3(a).

(c) The registrant shall maintain a record of each dosimetry system calibration, intercomparison, and comparison for the duration of the license and/or registration. For each calibration, intercomparison, or comparison, the record shall include the date, the model numbers and serial numbers of the instruments that were calibrated, inter-compared, or compared as required by H.4.3(a) and H.4.3(b), the correction factors that were determined, the names of the individuals who performed the calibration, intercomparison, or comparison, and evidence that the intercomparison was performed by, or under the direct supervision and in the physical presence of, a Radiotherapy Physicist.

H.4.4 **Reports of External Beam Radiation Therapy Surveys and Measurements.** The registrant for any therapeutic radiation machine subject to H.6 or H.7 shall furnish a copy of the records required in H.4.1 and H.4.2 to the Agency within 30 days following completion of the action that initiated the

record requirement.

H.5 QUALITY MANAGEMENT PROGRAM

H.5.1 In addition to the definitions in H.2, the following definitions are applicable to a quality management program:

(a) Prescribed dose means the total dose and dose per fraction as documented in the written directive.

(b) Misadministration means the administration of an external beam radiation therapy dose:

(1) Involving the wrong patient/human research subject, wrong mode of treatment, or wrong treatment site; or

(2) When the treatment consists of three (3) or fewer fractions and the calculated total administered dose differs from the total prescribed dose by more than 10 percent of the total prescribed dose; or

(3) When the calculated weekly administered dose differs from the weekly prescribed dose by more than 30 percent; or

(4) When the calculated total administered dose differs from the total prescribed dose by more than 20 percent of the total prescribed dose.

(c) Recordable event means the administration of an external beam radiation therapy dose when the calculated weekly administered dose differs by 15 percent or more from the weekly prescribed dose.

(d) Written directive means an order in writing for a specific patient/human research subject, dated and signed by an authorized user prior to the administration of radiation, containing the following information: total dose, dose per fraction, treatment site and overall treatment period.

H.5.2 **Scope and Applicability.** Each applicant or registrant subject to H.6 or H.7 shall establish and maintain a written quality management program to provide high confidence that radiation will be administered as directed by the authorized user. The quality management program shall include written policies and procedures to meet the following specific objectives:

(a) Prior to administration, a written directive is prepared for any external beam radiation therapy dose.

(1) Notwithstanding H.5.2(a), a written revision to an existing written directive may be made provided that the revision is dated and signed by an authorized user prior to administration of the external beam radiation therapy dose or the next external beam radiation therapy fractional dose;

(2) Notwithstanding H.5.2(a), if, because of the patient's/human research subject's condition, a delay in order to provide a written revision to an existing written directive would jeopardize the patient's/human research subject's health, an oral revision to an existing written directive shall be acceptable, provided that the oral revision is documented immediately in the patient's/human research subject's record and a revised written directive is signed by an authorized user within 48 hours of the oral revision;

(3) Notwithstanding H.5.2(a), if, because of the emergent nature of the patient's/human research subject's condition, a delay in order to provide a written directive would jeopardize the patient's/human research subject's health, an oral directive shall be acceptable, provided that the information contained in the oral directive is documented immediately in the patient's/human research subject's record and a written directive is prepared and signed by an authorized user within 24 hours of the oral directive.

(b) Prior to the administration of each course of radiation treatments, the patient's/human research subject's identity is verified, by more than one method, as the individual named in the written directive.

(c) External beam radiation therapy final plans of treatment and related calculations are in accordance with the respective written directives.

(d) Each administration is in accordance with the written directive. and

H.5.2(e)

(e) Any unintended deviation from the written directive is identified and evaluated, and appropriate action is taken.

H.5.3 **Development of Quality Management Program.** Each application for registration subject to H.6 or H.7 shall include a quality management program that specifies staff, duties and responsibilities, and equipment and procedures as part of the application required by Part B of these regulations. The registrant shall implement the program upon issuance of a Certificate of Registration by the Agency.

H.5.4 **Implementation of Quality Management Program.** As a part of the quality management program, the registrant shall:

(a) Develop procedures for, and conduct a review of, the quality management program including, since the last review, an evaluation of a representative sample of patient/human research subject administrations, all recordable events, and all misadministrations to verify compliance with all aspects of the quality management program.

(b) Conduct these reviews at intervals not to exceed 12 months.

(c) Evaluate each of these reviews to determine the effectiveness of the quality management program and, if required, make modifications to meet the requirements of H.5.2. and

(d) Maintain records of each review, including the evaluations and findings of the review, in an auditable form, for 3 years.

H.5.5 The registrant shall evaluate and respond, within 30 days after discovery of the recordable event, to each recordable event by:

(a) Assembling the relevant facts including the cause.

(b) Identifying what, if any, corrective action is required to prevent recurrence. and

(c) Retaining a record, in an auditable form, for 3 years, of the relevant facts and what corrective action, if any, was taken.

H.5.6 The registrant shall retain:

(a) Each written directive. and

(b) A record of each administered radiation dose, in an auditable form, for 3 years after the date of administration.

H.5.7 The registrant may make modifications to the quality management program to increase the program's efficiency provided the program's effectiveness is not decreased.

H.5.8 The registrant shall evaluate each misadministration and shall take the following actions in response to a misadministration:

(a) Notify the Agency by telephone[1] no later than the next calendar day after discovery of the misadministration.

[illegible]

H.5.8(b)

(b) Submit a written report to the Agency within 15 days after discovery of the misadministration. The written report shall include: the registrant's name; the prescribing physician's name; a brief description of the event; why the event occurred; the effect on the individual who received the misadministration; what improvements are needed to prevent recurrence; actions taken to prevent recurrence; whether the registrant notified the individual or the individual's responsible relative or guardian, and if not, why not, and if there was notification, what information was provided to the individual. The report shall not include the individual's name or other information that could lead to identification of the individual. To meet the requirements of this Section, the notification of the individual receiving the misadministration may be made instead to that individual's responsible relative or guardian, when appropriate.

(c) Notify the referring physician and also notify the individual who received the misadministration no later than 24 hours after its discovery, unless the referring physician personally informs the registrant either that he/she will inform the individual or that, based on medical judgment, telling the individual would be harmful. The registrant is not required to notify the individual without first consulting the referring physician. If the referring physician or individual who received the misadministration cannot be reached within 24 hours, the registrant shall notify the individual as soon as possible thereafter. The registrant shall not delay any appropriate medical care for the individual, including any necessary remedial care as a result of the misadministration, because of any delay in notification.

(d) If the individual was notified, furnish, within 15 days after discovery of the misadministration, a written report to the individual by sending either a copy of the report that was submitted to the Agency, or a brief description of both the event and the consequences as they may effect the individual, provided a statement is included that the report submitted to the Agency can be obtained from the registrant. and

(e) Retain a record of each misadministration for 5 years. The record shall contain the names of all individuals involved (including the prescribing physician, allied health personnel, the individual who received the misadministration, and the individual's referring physician, if applicable), the individual's social security number or identification number if one has been assigned, a brief description of the event, why it occurred, the effect on the individual, what improvements are needed to prevent recurrence, and the actions taken to prevent recurrence.

H.5.9 Aside from the notification requirement, nothing in H.5.8 affects any rights or duties of registrants and physicians in relation to each other, individuals receiving misadministrations, or the individual's responsible relatives or guardians.

H.6 THERAPEUTIC RADIATION MACHINES OF LESS THAN 500 kV

H.6.1 **Leakage Radiation.** When the X-ray tube is operated at its maximum rated tube current for the maximum kV, the leakage air kerma rate shall not exceed the value specified at the distance specified for that classification of therapeutic radiation machine:

(a) **5-50 kV Systems.** The leakage air kerma rate measured at any position 5 centimeters from the tube housing assembly shall not exceed 1 mGy (100 mrad) in any one hour.

(b) **>50 and <500 kV Systems.** The leakage air kerma rate measured at a distance of 1 meter from the target in any direction shall not exceed 1 cGy (1 rad) in any 1 hour. This air kerma rate measurement may be averaged over areas no larger than 100 square centimeters. In addition, the air kerma rate at a distance of 5 centimeters from the surface of the tube housing assembly shall not exceed 30 cGy (30 rad) per hour.

(c) For each therapeutic radiation machine, the registrant shall determine, or obtain from the manufacturer, the leakage radiation existing at the positions specified in H.6.1(a) and H.6.1(b) for the specified operating conditions. Records on leakage radiation measurements shall be maintained at the installation for inspection by the Agency.

H.6.2 **Permanent Beam Limiting Devices.** Permanent diaphragms or cones used for limiting the useful beam shall provide at least the same degree of attenuation as required for the tube housing assembly.

H.6.3 **Adjustable or Removable Beam Limiting Devices.**

(a) All adjustable or removable beam limiting devices, diaphragms, cones or blocks shall not transmit more than 5 percent of the useful beam for the most penetrating beam used.

(b) When adjustable beam limiting devices are used, the position and shape of the radiation field shall be indicated by a light beam.

H.6.4 **Filter System.** The filter system shall be so designed that:

(a) Filters can not be accidentally displaced at any possible tube orientation.

(b) For equipment installed after 1 August 1978, an interlock system prevents irradiation if the proper filter is not in place.

(c) The air kerma rate escaping from the filter slot shall not exceed 1 cGy (1 rad) per hour at 1 meter under any operating conditions. and

(d) Each filter shall be marked as to its material of construction and its thickness.

H.6.5 **Tube Immobilization.**

(a) The X-ray tube shall be so mounted that it can not accidentally turn or slide with respect to the housing aperture. and

(b) The tube housing assembly shall be capable of being immobilized for stationary portal treatments.

H.6.6 **Source Marking.** The tube housing assembly shall be so marked that it is possible to determine the location of the source to within 5 millimeters, and such marking shall be readily accessible for use during calibration procedures.

H.6.7 **Beam Block.** Contact therapy tube housing assemblies shall have a removable shield of material, equivalent in attenuation to 0.5 millimeters of lead at 100 kV, which can be positioned over the entire useful beam exit port during periods when the beam is not in use.

H.6.8 **Timer.** A suitable irradiation control device shall be provided to terminate the irradiation after a pre-set time interval.

(a) A timer which has a display shall be provided at the treatment control panel. The timer shall have a pre-set time selector and an elapsed time or time remaining indicator.

(b) The timer shall be a cumulative timer which activates with an indication of "BEAM-ON" and retains its reading after irradiation is interrupted or terminated. After irradiation is terminated and before irradiation can be reinitiated, it shall be necessary to reset the elapsed time indicator.

(c) The timer shall terminate irradiation when a pre-selected time has elapsed, if any dose monitoring system present has not previously terminated irradiation.

(d) The timer shall permit accurate pre-setting and determination of exposure times as short as 1 second.

(e) The timer shall not permit an exposure if set at zero.

H.6.8(f)

(f) The timer shall not activate until the shutter is opened when irradiation is controlled by a shutter mechanism unless calibration includes a timer error correction to compensate for mechanical lag. and

(g) Timer shall be accurate to within 1 percent of the selected value or 1 second, whichever is greater.

H.6.9 **Control Panel Functions.** The control panel, in addition to the displays required by other provisions in H.6, shall have:

(a) An indication of whether electrical power is available at the control panel and if activation of the X-ray tube is possible.

(b) An indication of whether X-rays are being produced.

(c) Means for indicating X-ray tube potential and current.

(d) The means for terminating an exposure at any time.

(e) A locking device which will prevent unauthorized use of the therapeutic radiation machine. and

(f) For therapeutic radiation machines manufactured after 1 August 1978, a positive display of specific filter(s) in the beam.

H.6.10 **Multiple Tubes.** When a control panel may energize more than one X-ray tube:

(a) It shall be possible to activate only one X-ray tube at any time.

(b) There shall be an indication at the control panel identifying which X-ray tube is activated. and

(c) There shall be an indication at the tube housing assembly when that tube is energized.

H.6.11 **Target-to-Skin Distance (TSD).** There shall be a means of determining the central axis TSD to within 1 centimeter and of reproducing this measurement to within 2 millimeters thereafter.

H.6.12 **Shutters.** Unless it is possible to bring the X-ray output to the prescribed exposure parameters within 5 seconds after the X-ray "ON" switch is energized, the beam shall be attenuated by a shutter having a lead equivalency not less than that of the tube housing assembly. In addition, after the unit is at operating parameters, the shutter shall be controlled by the operator from the control panel. An indication of shutter position shall appear at the control panel.

H.6.13 **Low Filtration X-ray Tubes.** Each therapeutic radiation machine equipped with a beryllium or other low-filtration window shall be clearly labeled as such upon the tube housing assembly and shall be provided with a permanent warning device on the control panel that is activated when no additional filtration is present, to indicate that the dose rate is very high.

H.6.14 **Facility Design Requirements for Therapeutic Radiation Machines Capable of Operating in the Range 50 kV to 500 kV.** In addition to shielding adequate to meet requirements of H.9, the treatment room shall meet the following design requirements:

(a) **Aural Communication.** Provision shall be made for continuous two-way aural communication between the patient/human research subject and the operator at the control panel.

H.6.14(b)

(b) **Viewing Systems.** Provision shall be made to permit continuous observation of the patient/human research subject during irradiation and the viewing system shall be so located that the operator can observe the patient/human research subject from the control panel. The therapeutic radiation machine shall not be used for patient/human research subject irradiation unless at least one viewing system is operational.

H.6.15 **Additional Requirements.** Treatment rooms which contain a therapeutic radiation machine capable of operating above 150 kV shall meet the following additional requirements:

(a) All protective barriers shall be fixed except for entrance doors or beam interceptors.

(b) The control panel shall be located outside the treatment room.

(c) Interlocks shall be provided such that all entrance doors, including doors to any interior booths, shall be closed before treatment can be initiated or continued. If the radiation beam is interrupted by any door opening, it shall not be possible to restore the machine to operation without closing the door and reinitiating irradiation by manual action at the control panel. and

(d) When any door referred to in H.6.15(c) is opened while the X-ray tube is activated, the air kerma rate at a distance of 1 meter from the source shall be reduced to less than 1 mGy (100 mrad) per hour.

H.6.16 **Full Calibration Measurements.**

(a) Full calibration of a therapeutic radiation machine subject to H.6 shall be performed by, or under the direct supervision of, a Radiotherapy Physicist:

(1) Before the first medical use following installation or reinstallation of the therapeutic radiation machine; and

(2) At intervals not exceeding 1 year; and

(b) The Radiotherapy Physicist shall perform or directly supervise all elements of a full calibration necessary to determine that all parameters are within acceptable limits:

(1) Whenever quality assurance check measurements indicate that the radiation output differs by more than 5 percent from the value obtained at the last full calibration and the difference cannot be reconciled. Therapeutic radiation machines with multi-energy capabilities shall only require measurements for those modes and/or energies that are not within their acceptable range; and

(2) Following any component replacement, major repair, or modification of components that could significantly affect the characteristics of the radiation beam. If the repair, replacement or modification does not affect all energies, measurements shall be performed on the effected energy that is in most frequent clinical use at the facility. The remaining energies may be validated with quality assurance check procedures against the criteria in H.6.16(b)(1).

(c) To satisfy the requirement of H.6.16(a) and H.6.16(b), full calibration shall include all measurements recommended for annual calibration by NCRP Report 69, "Dosimetry of X-Ray and Gamma Ray Beams for Radiation Therapy in the Energy Range 10 keV to 50 MeV" (1981).

(d) The registrant shall maintain a record of each calibration for the duration of the registration. The record shall include the date of the calibration, the manufacturer's name, model number, and serial number for both the therapeutic radiation machine and the X-ray tube, the model numbers and serial numbers of the instruments used to calibrate the therapeutic radiation machine, and the signature of the Radiotherapy Physicist responsible for performance of the calibration.

H.6.17 **Periodic Quality Assurance Checks.**

(a) Periodic quality assurance checks shall be performed on therapeutic radiation machines subject to H.6, which are capable of operation at greater than or equal to 50 kV.

(b) To satisfy the requirement of H.6.17(a), quality assurance checks shall meet the following requirements:

(1) The registrant shall perform quality assurance checks in accordance with written procedures established by the Radiotherapy Physicist.; and

(2) The quality assurance check procedures shall specify the frequency at which tests or measurements are to be performed. The quality assurance check procedures shall specify that the quality assurance check shall be performed during the calibration specified in H.6.16(a). The acceptable tolerance for each parameter measured in the quality assurance check, when compared to the value for that parameter determined in the calibration specified in H.6.16(a), shall be stated.

(c) The cause for a parameter exceeding a tolerance set by the Radiotherapy Physicist shall be investigated and corrected before the system is used for patient/human research subject irradiation.

(d) Whenever a quality assurance check indicates a significant change in the operating characteristics of a system, as specified in the Radiotherapy Physicist's quality assurance check procedures, those elements of a full calibration shall be performed, as required in H.6.16(a), that are necessary to determine that all affected parameters are within acceptable limits. Other quality assurance check procedures should be repeated, as necessary, to ensure that all system parameters are within acceptable limits.

(e) The registrant shall use the dosimetry system described in H.4.3(b) to make the quality assurance check required in H.6.17(b).

(f) The registrant shall have the Radiotherapy Physicist review and sign the results of each radiation output quality assurance check within 1 month of the date that the check was performed.

(g) The registrant shall ensure that safety quality assurance checks of therapeutic radiation machines subject to H.6 are performed at intervals not to exceed 1 month.

(h) Notwithstanding the requirements of H.6.17(f) and H.6.17(g), the registrant shall ensure that no therapeutic radiation machine is used to administer radiation to humans unless the quality assurance checks required by H.6.17(f) and H.6.17(g) have been performed within the 30 day period immediately prior to said administration.

(i) To satisfy the requirement of H.6.17(g), safety quality assurance checks shall ensure proper operation of:

(1) Electrical interlocks at each external beam radiation therapy room entrance;

(2) Proper operation of the "BEAM-ON" and termination switches;

(3) Beam condition indicator lights on the access door(s), control console, and in the radiation therapy room;

(4) Viewing systems;

(5) If applicable, electrically operated treatment room doors from inside and outside the treatment room;

(j) The registrant shall maintain a record of each quality assurance check required by H.6.17(a) and H.6.17(g) for 3 years. The record shall include the date of the quality assurance check, the manufacturer's name, model number, and serial number for the therapeutic radiation machine, the manufacturer's name, model number and serial number of the instrument(s) used to measure the

radiation output of the therapeutic radiation machine, and the signature of the individual who performed the periodic quality assurance check.

H.6.18 **Operating Procedures.**

(a) The therapeutic radiation machine shall not be used for irradiation of patients/human research subjects unless the requirements of H.6.16 and H.6.17 have been met.

(b) Therapeutic radiation machines shall not be left unattended unless secured pursuant to H.6.9(e).

(c) When a patient/human research subject must be held in position for radiation therapy, mechanical supporting or restraining devices shall be used.

(d) The tube housing assembly shall not be held by an individual during operation unless the assembly is designed to require such holding and the peak tube potential of the system does not exceed 50 kV. In such cases, the holder shall wear protective gloves and apron of not less than 0.5 millimeters lead equivalency at 100 kV.

(e) A copy of the current operating and emergency procedures shall be maintained at the therapeutic radiation machine control console. and

(f) No individual other than the patient/human research subject shall be in the treatment room during exposures from therapeutic radiation machines operating above 150 kV. At energies less than or equal to 150 kV, any individual, other than the patient/human research subject, in the treatment room shall be protected by a barrier sufficient to meet the requirements of A.2.3 of these regulations.

H.6.19 **Possession of Survey Instrument(s).** Each facility location authorized to use a therapeutic radiation machine in accordance with H.6 shall possess appropriately calibrated portable monitoring equipment. As a minimum, such equipment shall include a portable radiation measurement survey instrument capable of measuring dose rates over the range 10 µSv (1 mrem) per hour to 10 mSv (1000 mrem) per hour. The survey instrument(s) shall be operable and calibrated in accordance with H.8.

H.7 THERAPEUTIC RADIATION MACHINES - PHOTON THERAPY SYSTEMS (500 kV AND ABOVE) AND ELECTRON THERAPY SYSTEMS (500 keV AND ABOVE)

H.7.1 **Possession of Survey Instrument(s).** Each facility location authorized to use a therapeutic radiation machine in accordance with H.7 shall possess appropriately calibrated portable monitoring equipment. As a minimum, such equipment shall include a portable radiation measurement survey instrument capable of measuring dose rates over the range 10 µSv (1 mrem) per hour to 10 mSv (1000 mrem) per hour. The survey instrument(s) shall be operable and calibrated in accordance with H.8.

H.7.2 **Leakage Radiation Outside the Maximum Useful Beam in Photon and Electron Modes.**

(a) The absorbed dose due to leakage radiation (excluding neutrons) at any point outside the maximum sized useful beam, but within a circular plane of radius 2 meters which is perpendicular to and centered on the central axis of the useful beam at the nominal treatment distance (i.e. patient/human research subject plane), shall not exceed a maximum of 0.2 percent and an average of 0.1 percent of the absorbed dose on the central axis of the beam at the nominal treatment distance. Measurements shall be averaged over an area not exceeding 100 square centimeters at a minimum of 16 points uniformly distributed in the plane.

(b) Except for the area defined in H.7.2(a), the absorbed dose due to leakage radiation (excluding neutrons) at 1 meter from the electron path between the electron source and the target or electron window shall not exceed 0.5 percent of the absorbed dose on the central axis of the beam at the nominal treatment distance. Measurements shall be averaged over an area not exceeding 100 square centimeters.

(c) For equipment manufactured after 1 July 1999, the neutron absorbed dose outside the useful beam shall be in compliance with International Electrotechnical Commission (IEC) Document 601-2-1 (most current revision). and

H.7.2(d)

(d) For each therapeutic radiation machine, the registrant shall determine, or obtain from the manufacturer, the leakage radiation existing at the positions specified in H.7.2(a) through H.7.2(c) for the specified operating conditions. Records on leakage radiation measurements shall be maintained at the installation for inspection by the Agency.

H.7.3 **Leakage Radiation Through Beam Limiting Devices.**

(a) **Photon Radiation.** All adjustable or interchangeable beam limiting devices shall attenuate the useful beam such that at the nominal treatment distance, the maximum absorbed dose anywhere in the area shielded by the beam limiting device(s) shall not exceed 2 percent of the maximum absorbed dose on the central axis of the useful beam measured in a 10 centimeters by 10 centimeters radiation field.

(b) **Electron Radiation.** All adjustable or interchangeable electron applicators shall attenuate the radiation, including but not limited to photon radiation generated by electrons incident on the beam limiting device and electron applicator and other parts of the radiation head, such that the absorbed dose in a plane perpendicular to the central axis of the useful beam at the nominal treatment distance shall not exceed:

(1) A maximum of 2 percent and average of 0.5 percent of the absorbed dose on the central axis of the useful beam at the nominal treatment distance. This limit shall apply beyond a line 7 centimeters outside the periphery of the useful beam; and

(2) A maximum of 10 percent of the absorbed dose on the central axis of the useful beam at the nominal treatment distance. This limit shall apply beyond a line 2 centimeters outside the periphery of the useful beam.

(c) **Measurement of Leakage Radiation.**

(1) **Photon Radiation.** Measurements of leakage radiation through the beam limiting devices shall be made with the beam limiting devices closed and any residual aperture blocked by at least 2 tenth value layers of suitable absorbing material. In the case of overlapping beam limiting devices, the leakage radiation through each set shall be measured independently at the depth of maximum dose. Measurements shall be made using a radiation detector of area not exceeding 10 square centimeters;

(2) **Electron Radiation.** Measurements of leakage radiation through the electron applicators shall be made with the electron beam directed into the air and using a radiation detector of area up to but not exceeding 1 square centimeter suitably protected against radiation which has been scattered from material beyond the radiation detector. Measurements shall be made using 1 centimeter of water equivalent build up material.

H.7.4 **Filters/Wedges.**

(a) Each wedge filter which is removable from the system shall be clearly marked with an identification number. For removable wedge filters, the nominal wedge angle shall appear on the wedge or wedge tray (if permanently mounted to the tray). If the wedge or wedge tray is significantly damaged, the wedge transmission factor shall be redetermined.

(b) If the absorbed dose rate information required by H.7.1 relates exclusively to operation with a field flattening filter or beam scattering foil in place, such foil or filter shall be removable only by the use of tools.

(c) For equipment manufactured after 1 January 1985 which utilize a system of wedge filters, inter-changeable field flattening filters, or interchangeable beam scattering foils:

(1) Irradiation shall not be possible until a selection of a filter or a positive selection to use "no filter" has been made at the treatment control panel, either manually or automatically;

(2) An interlock system shall be provided to prevent irradiation if the filter selected is not in the correct position;

(3) A display shall be provided at the treatment control panel showing the wedge filter(s), interchangeable field flattening filter(s), and/or interchangeable beam scattering foil(s) in use; and

(4) An interlock shall be provided to prevent irradiation if any filter and/or beam scattering foil selection operation carried out in the treatment room does not agree with the filter and/or beam scattering foil selection operation carried out at the treatment control panel.

H.7.5 **Stray Radiation in the Useful Beam.** For equipment manufactured after 1 July 1999, the registrant shall determine during acceptance testing, or obtain from the manufacturer, data sufficient to ensure that X-ray stray radiation in the useful electron beam, absorbed dose at the surface during X-ray irradiation and stray neutron radiation in the useful X-ray beam are in compliance with International Electrotechnical Commission (IEC) Document 601-2-1 (most current revision).

H.7.6 **Beam Monitors.** All therapeutic radiation machines subject to H.7 shall be provided with redundant beam monitoring systems. The detectors for these systems shall be fixed in the useful beam during treatment to indicate the dose monitor unit rate.

(a) Equipment manufactured after 1 January 1985 shall be provided with at least 2 independently powered integrating dose meters. Alternatively, common elements may be used if the production of radiation is terminated upon failure of any common element.

(b) Equipment manufactured on or before 1 January 1985 shall be provided with at least 1 radiation detector. This detector shall be incorporated into a useful beam monitoring system.

(c) The detector and the system into which that detector is incorporated shall meet the following requirements:

(1) Each detector shall be removable only with tools and, if movable, shall be interlocked to prevent incorrect positioning;

(2) Each detector shall form part of a beam monitoring system from whose readings in dose monitor units the absorbed dose at a reference point can be calculated;

(3) Each beam monitoring system shall be capable of independently monitoring, interrupting, and terminating irradiation; and

(4) For equipment manufactured after 1 January 1985, the design of the beam monitoring systems shall ensure that the:

(i) Malfunctioning of one system shall not affect the correct functioning of the other system(s); and

(ii) Failure of either system shall terminate irradiation or prevent the initiation of radiation.

(5) Each beam monitoring system shall have a legible display at the treatment control panel. For equipment manufactured after 1 January 1985, each display shall:

(i) Maintain a reading until intentionally reset;

(ii) Have only one scale and no electrical or mechanical scale multiplying factors;

(iii) Utilize a design such that increasing dose is displayed by increasing numbers; and

(iv) In the event of power failure, the beam monitoring information required in H.7.6(c)(5)(iii) displayed at the control panel at the time of failure shall be retrievable in at least one system for a 20 minute period of time.

H.7.7

H.7.7 **Beam Symmetry.**

(a) Bent-beam linear accelerators subject to H.7 shall be provided with auxiliary device(s) to monitor beam symmetry.

(b) The device(s) referenced in H.7.7(a) shall be able to detect field asymmetry greater than 10 percent. and

(c) The device(s) referenced in H.7.7(a) shall be configured to terminate irradiation if the specifications in H.7.7(b) can not be maintained.

H.7.8 **Selection and Display of Dose Monitor Units.**

(a) Irradiation shall not be possible until a new selection of a number of dose monitor units has been made at the treatment control panel.

(b) The pre-selected number of dose monitor units shall be displayed at the treatment control panel until reset manually for the next irradiation.

(c) After termination of irradiation, it shall be necessary to reset the dosimeter display before subsequent treatment can be initiated. and

(d) For equipment manufactured after 1 January 1985, after termination of irradiation, it shall be necessary for the operator to reset the pre-selected dose monitor units before irradiation can be initiated.

H.7.9 **Air Kerma Rate/Absorbed Dose Rate.** For equipment manufactured after 1 January 1985, a system shall be provided from whose readings the air kerma rate or absorbed dose rate at a reference point can be calculated. [The radiation detectors specified in H.7.6 may form part of this system.] In addition:.

(a) The dose monitor unit rate shall be displayed at the treatment control panel.

(b) If the equipment can deliver under any conditions an air kerma rate or absorbed dose rate at the nominal treatment distance more than twice the maximum value specified by the manufacturer, a device shall be provided which terminates irradiation when the air kerma rate or absorbed dose rate exceeds a value twice the specified maximum. The dose rate at which the irradiation will be terminated shall be a record maintained by the registrant.

(c) If the equipment can deliver under any fault condition(s) an air kerma rate or absorbed dose rate at the nominal treatment distance more than ten (10) times the maximum value specified by the manufacturer, a device shall be provided to prevent the air kerma rate or absorbed dose rate anywhere in the radiation field from exceeding twice the specified maximum value and to terminate irradiation if the excess absorbed dose at the nominal treatment distance exceeds 4 Gy (400 rad). and

(d) For each therapeutic radiation machine, the registrant shall determine, or obtain from the manufacturer, the maximum value(s) specified in H.7.9(b) and H.7.9(c) for the specified operating conditions. Records of these maximum value(s) shall be maintained at the installation for inspection by the Agency.

H.7.10 **Termination of Irradiation by the Beam Monitoring System or Systems During Stationary Beam Radiation Therapy.**

(a) Each primary system shall terminate irradiation when the pre-selected number of dose monitor units has been detected by the system.

(b) If the original design of the equipment included a secondary dose monitoring system, that system shall be capable of terminating irradiation when not more than 15 percent or 40 dose

monitor units above the pre-selected number of dose monitor units set at the control panel has been detected by the secondary dose monitoring system. and

H.7.10(c)

(c) For equipment manufactured after 1 January 1985, an indicator on the control panel shall show which monitoring system has terminated irradiation.

H.7.11 **Termination of Irradiation.** It shall be possible to terminate irradiation and equipment movement or go from an interruption condition to termination condition at any time from the operator's position at the treatment control panel.

H.7.12 **Interruption of Irradiation.** If a therapeutic radiation machine has an interrupt mode, it shall be possible to interrupt irradiation and equipment movements at any time from the treatment control panel. Following an interruption it shall be possible to restart irradiation by operator action without any reselection of operating conditions. If any change is made of a pre-selected value during an interruption, irradiation and equipment movements shall be automatically terminated.

H.7.13 **Timer.** A suitable irradiation control device shall be provided to terminate the irradiation after a pre-set time interval.

(a) A timer shall be provided which has a display at the treatment control panel. The timer shall have a pre-set time selector and an elapsed time indicator.

(b) The timer shall be a cumulative timer which activates with an indication of "BEAM-ON" and retains its reading after irradiation is interrupted or terminated. After irradiation is terminated and before irradiation can be reinitiated, it shall be necessary to reset the elapsed time indicator.

(c) The timer shall terminate irradiation when a pre-selected time has elapsed, if the dose monitoring systems have not previously terminated irradiation.

H.7.14 **Selection of Radiation Type.** Equipment capable of both X-ray therapy and electron therapy shall meet the following additional requirements:

(a) Irradiation shall not be possible until a selection of radiation type (X-rays or electrons) has been made at the treatment control panel.

(b) The radiation type selected shall be displayed at the treatment control panel before and during irradiation.

(c) An interlock system shall be provided to ensure that the equipment can principally emit only the radiation type which has been selected.

(d) An interlock system shall be provided to prevent irradiation with X-rays, except to obtain an image, when electron applicators are fitted.

(e) An interlock system shall be provided to prevent irradiation with electrons when accessories specific for X-ray therapy are fitted. and

(f) An interlock system shall be provided to prevent irradiation if any selected operations carried out in the treatment room do not agree with the selected operations carried out at the treatment control panel.

H.7.15 **Selection of Energy.** Equipment capable of generating radiation beams of different energies shall meet the following requirements:

(a) Irradiation shall not be possible until a selection of energy has been made at the treatment control panel.

H.7.15(b)

(b) The nominal energy value selected shall be displayed at the treatment control panel until reset manually for the next irradiation. After termination of irradiation, it shall be necessary to reset the nominal energy value selected before subsequent treatment can be initiated.

(c) Irradiation shall not be possible until the appropriate flattening filter or scattering foil for the selected energy is in its proper location. and

(d) For equipment manufactured after 1 July 1999, the selection of energy shall be in compliance with International Electrotechnical Commission (IEC) Document 601-2-1 (most current revision).

H.7.16 **Selection of Stationary Beam Radiation Therapy or Moving Beam Radiation Therapy.** Therapeutic radiation machines capable of both stationary beam radiation therapy and moving beam radiation therapy shall meet the following requirements:

(a) Irradiation shall not be possible until a selection of stationary beam radiation therapy or moving beam radiation therapy has been made at the treatment control panel.

(b) The mode of operation shall be displayed at the treatment control panel.

(c) An interlock system shall be provided to ensure that the equipment can operate only in the mode which has been selected.

(d) An interlock system shall be provided to prevent irradiation if any selected parameter in the treatment room does not agree with the selected parameter at the treatment control panel.

(e) Moving beam radiation therapy shall be controlled to obtain the selected relationships between incremental dose monitor units and incremental movement.

(1) For equipment manufactured after 1 January 1985:

(i) Where angle terminates the irradiation in moving beam radiation therapy, the dose monitor units delivered shall differ by less than 5 percent from the dose monitor unit value selected;

(ii) An interlock shall be provided to prevent motion of more than 5 degrees or 1 cm beyond the selected limits during moving beam radiation therapy;

(iii) An interlock shall be provided to require that a selection of direction be made at the treatment control panel in all units which are capable of both clockwise and counter-clockwise moving beam radiation therapy.

(2) For equipment manufactured after 1 July 1999:

(i) An interlock system shall be provided to terminate irradiation if the number of dose monitor units delivered in any 10 degrees of rotation or 1 cm of linear motion differs by more than 20 percent from the selected value;

(ii) Moving beam radiation therapy shall be controlled with both primary position sensors and secondary position sensors to obtain the selected relationships between incremental dose monitor units and incremental movement.

(f) Where the beam monitor system terminates the irradiation in moving beam radiation therapy, the termination of irradiation shall be as required by H.7.10. and

(g) For equipment manufactured after1 January 1985, an interlock system shall be provided to terminate irradiation if movement:

(1) Occurs during stationary beam radiation therapy; or

(2) Does not start or stops during moving beam radiation therapy unless such stoppage is a pre-planned function.

H.7.17 **Facility Design Requirements for Therapeutic Radiation Machines Operating above 500 kV.** In addition to shielding adequate to meet requirements of H.9, the following design requirements are made:

(a) **Protective Barriers.** All protective barriers shall be fixed, except for access doors to the treatment room or movable beam interceptors.

(b) **Control Panel.** In addition to other requirements specified in this Part, the control panel shall also:

(1) Be located outside the treatment room;

(2) Provide an indication of whether electrical power is available at the control panel and if activation of the radiation is possible;

(3) Provide an indication of whether radiation is being produced; and

(4) Include an access control (locking) device which will prevent unauthorized use of the therapeutic radiation machine;

(c) **Viewing Systems.** Windows, mirrors, closed-circuit television or an equivalent viewing system shall be provided to permit continuous observation of the patient/human research subject following positioning and during irradiation and shall be so located that the operator may observe the patient/human research subject from the treatment control panel. The therapeutic radiation machine shall not be used for patient/human research subject irradiation unless at least one viewing system is operational.

(d) **Aural Communications.** Provision shall be made for continuous two-way aural communication between the patient/human research subject and the operator at the control panel. The therapeutic radiation machine shall not be used for irradiation of patients/human research subjects unless continuous two-way aural communication is possible.

(e) **Room Entrances.** Treatment room entrances shall be provided with warning lights in a readily observable position near the outside of all access doors, which will indicate when the useful beam is "ON" and when it is "OFF".

(f) **Entrance Interlocks.** Interlocks shall be provided such that all access controls are activated before treatment can be initiated or continued. If the radiation beam is interrupted by any access control, it shall not be possible to restore the machine to operation without resetting the access control and reinitiating irradiation by manual action at the control panel.

(g) **Beam Interceptor Interlocks.** If the shielding material in any protective barrier requires the presence of a beam interceptor to ensure compliance with A.2.11(a) and A.2.11(b), interlocks shall be provided to prevent the production of radiation, unless the beam interceptor is in place, whenever the useful beam is directed at the designated barrier(s).

(h) **Emergency Cutoff Switches.** At least 1 emergency power cutoff switch shall be located in the radiation therapy room and shall terminate all equipment electrical power including radiation and mechanical motion. This switch is in addition to the termination switch required by H.7.11. All emergency power cutoff switches shall include a manual reset so that the therapeutic radiation machine cannot be restarted from the unit's control console without resetting the emergency cutoff switch.

(i) **Safety Interlocks.** All safety interlocks shall be designed so that any defect or component failure in the safety interlock system prevents or terminates operation of the therapeutic radiation machine. and

(j) **Surveys for Residual Radiation.** Surveys for residual activity shall be conducted on all

therapeutic radiation machines capable of generating photon and electron energies above 10 MV prior to machining, removing, or working on therapeutic radiation machine components which may have become activated due to photo-neutron production.

H.7.18 **Radiotherapy Physicist Support.**

(a) The services of a Radiotherapy Physicist shall be required in facilities having therapeutic radiation machines with energies of 500 kV and above. The Radiotherapy Physicist shall be responsible for:

(1) Full calibration(s) required by H.7.20 and protection surveys required by H.4.1;

(2) Supervision and review of dosimetry;

(3) Beam data acquisition and transfer for computerized dosimetry, and supervision of its use;

(4) Quality assurance, including quality assurance check review required by H.7.21(e) of these regulations;

(5) Consultation with the authorized user in treatment planning, as needed; and

(6) Performing calculations/assessments regarding misadministrations.

(b) If the Radiotherapy Physicist is not a full-time employee of the registrant, the operating procedures required by H.7.19 shall also specifically address how the Radiotherapy Physicist is to be contacted for problems or emergencies, as well as the specific actions, if any, to be taken until the Radiotherapy Physicist can be contacted.

H.7.19 **Operating Procedures.**

(a) No individual, other than the patient/human research subject, shall be in the treatment room during treatment or during any irradiation for testing or calibration purposes.

(b) Therapeutic radiation machines shall not be made available for medical use unless the requirements of H.4.1, H.7.20 and H.7.21 have been met.

(c) Therapeutic radiation machines, when not in operation, shall be secured to prevent unauthorized use.

(d) When adjustable beam limiting devices are used, the position and shape of the radiation field shall be indicated by a light field.

(e) If a patient/human research subject must be held in position during treatment, mechanical supporting or restraining devices shall be used. and

(f) A copy of the current operating and emergency procedures shall be maintained at the therapeutic radiation machine control console.

H.7.20 **Acceptance Testing, Commissioning and Full Calibration Measurements.**

(a) Acceptance testing, commissioning and full calibration of a therapeutic radiation machine subject to H.7 shall be performed by, or under the direct supervision of, a Radiotherapy Physicist.

(b) Acceptance testing and commissioning shall be performed in accordance with "AAPM Code of Practice for Radiotherapy Accelerators: Report of AAPM Radiation Therapy Task Group 45" and shall be conducted before the first medical use following installation or reinstallation of the therapeutic radiation machine.

(c) Full calibration shall include measurement of all parameters required by Table II of "Comprehensive QA for Radiation Oncology: Report of AAPM Radiation Therapy Committee Task Group 40" and shall be performed in accordance with "AAPM Code of Practice for Radiotherapy Accelerators: Report of AAPM Radiation Therapy Task Group 45". Although it shall not be necessary to complete all elements of a full calibration at the same time, all parameters (for all

energies) shall be completed at intervals not exceeding 12 calendar months, unless a more frequent interval is required in Table II.

(d) The Radiotherapy Physicist shall perform or directly supervise all elements of a full calibration necessary to determine that all parameters are within acceptable limits:

(1) Whenever quality assurance check measurements indicate that the radiation output differs by more than 5 percent from the value obtained at the last full calibration and the difference cannot be reconciled. Therapeutic radiation machines with multi-energy and/or multi-mode capabilities shall only require measurements for those modes and/or energies that are not within their acceptable range; and

(2) Following any component replacement, major repair, or modification of components that could significantly affect the characteristics of the radiation beam. If the repair, replacement or modification does not affect all modes and/or energies, measurements shall be performed on the affected mode/ energy that is in most frequent clinical use at the facility. The remaining energies/modes may be validated with quality assurance check procedures against the criteria in H.7.20(d)(1).

(e) The registrant shall use the dosimetry system described in Section H.4.3(a) to measure the radiation output for one set of exposure conditions. The remaining radiation measurements required in H.7.20(b), (c) and (d) may then be made using a dosimetry system that indicates relative dose rates. and

(f) The registrant shall maintain a record of each calibration in an auditable form for the duration of the registration. The record shall include the date of the calibration, the manufacturer's name, model number, and serial number for the therapeutic radiation machine, the model numbers and serial numbers of the instruments used to calibrate the therapeutic radiation machine, and the signature of the Radiotherapy Physicist responsible for performance of the calibration.

H.7.21 **Periodic Quality Assurance Checks.**

(a) Periodic quality assurance checks shall be performed on all therapeutic radiation machines subject to H.7 at intervals not to exceed those specified in "Comprehensive QA for Radiation Oncology: Report of AAPM Radiation Therapy Committee Task Group 40". All periodic quality assurance checks with an annual frequency do not have to be performed at the same time, but shall be completed during an interval not to exceed 12 consecutive calendar months.

(b) The registrant shall use a dosimetry system which has been inter-compared within the previous 12 months with the dosimetry system described in H.4.3(a) to make the periodic quality assurance checks required in H.7.21(a).

(c) The registrant shall perform periodic quality assurance checks required by H.7.21(a) in accordance with procedures established by the Radiotherapy Physicist.

(d) The registrant shall review the results of each periodic radiation output check according to the following procedures:

(1) The authorized user or Radiotherapy Physicist shall be immediately notified if any parameter is not within its acceptable tolerance. The therapeutic radiation machine shall not be made available for subsequent medical use until the Radiotherapy Physicist has determined that all parameters are within their acceptable tolerances;

(2) If all radiation output quality assurance check parameters appear to be within their acceptable range, the quality assurance check shall be reviewed and signed by either the authorized user or Radiotherapy Physicist within 14 calendar days; and

(3) The Radiotherapy Physicist shall review and sign the results of each radiation output quality assurance check at intervals not to exceed 1 month.

(e) Therapeutic radiation machines subject to H.7 shall have the following safety quality assurance checks performed at intervals not to exceed 1 week:

(1) Proper operation of the "BEAM-ON", interrupt and termination switches;

(2) Beam condition indicator lights on the access doors, control console, and in the radiation therapy room;

(3) Electrically operated treatment room door(s) from inside and outside the treatment room;

(f) The registrant shall promptly repair any system identified in H.7.21(a) and H.7.21(e) that is not operating properly; and

(g) The registrant shall maintain a record of each quality assurance check required by H.7.21(a) and H.7.21(e) for 3 years. The record shall include the date of the quality assurance check, the manufacturer's name, model number, and serial number for the therapeutic radiation machine, the manufacturer's name, model number and serial number of the instrument(s) used to measure the radiation output of the therapeutic radiation machine, and the signature of the individual who performed the periodic quality assurance check.

H.8 CALIBRATION OF SURVEY INSTRUMENTS

H.8.1 The registrant shall ensure that the survey instruments used to show compliance with Part H have been calibrated before first use, at intervals not to exceed 12 months, and following repair.

H.8.2 To satisfy the requirements of H.8.1, the registrant shall:

(a) Calibrate all required scale readings up to 10 mSv (1000 mrem) per hour with an appropriate radiation source that is traceable to the National Institute of Standards and Technology (NIST).

(b) Calibrate at least two (2) points on each scale to be calibrated. These points should be at approximately 1/3 and 2/3 of full-scale.

H.8.3 To satisfy the requirements of H.8.2, the registrant shall:

(a) Consider a point as calibrated if the indicated dose rate differs from the calculated dose rate by not more than 10 percent. and

(b) Consider a point as calibrated if the indicated dose rate differs from the calculated dose rate by not more than 20 percent if a correction factor or graph is conspicuously attached to the instrument.

H.8.4 The registrant shall retain a record of each calibration required in H.8.1 for 3 years. The record shall include:

(a) A description of the calibration procedure. and

(b) A description of the source used and the certified dose rates from the source, and the rates indicated by the instrument being calibrated, the correction factors deduced from the calibration data, the signature of the individual who performed the calibration, and the date of calibration.

H.8.5 The registrant may obtain the services of individuals licensed by the Agency, the U.S. Nuclear Regulatory Commission, an Agreement State, or a Licensing State to perform calibrations of survey instruments. Records of calibrations which contain information required by H.8.4 shall be maintained by the registrant.

H.9 SHIELDING AND SAFETY DESIGN REQUIREMENTS

H.9.1 Each therapeutic radiation machine subject to H.6 or H.7 shall be provided with such primary and/or secondary barriers as are necessary to ensure compliance with A.2.3 and A.2.11.

H.9.2 Facility design information for all new installations of a therapeutic radiation machine or installations of a therapeutic radiation machine of higher energy into a room not previously approved for that energy shall be submitted for Agency approval prior to actual installation of the therapeutic radiation machine. The minimum facility design information that must be submitted is contained in Appendix A to Part H.

[REMAINDER OF PAGE INTENTIONALLY LEFT BLANK]

APPENDIX A

INFORMATION ON RADIATION SHIELDING REQUIRED FOR PLAN REVIEWS

I. ALL THERAPEUTIC RADIATION MACHINES

1. Basic facility information including: name, telephone number and Agency registration number of the individual responsible for preparation of the shielding plan; name and telephone number of the facility supervisor; and the street address [including room number] of the therapeutic radiation machine facility. The plan should also indicate whether this is a new structure or a modification to existing structure(s).

2. All wall, floor, and ceiling areas struck by the useful beam shall have primary barriers.

3. Secondary barriers shall be provided in all wall, floor, and ceiling areas not having primary barriers.

II. THERAPEUTIC RADIATION MACHINES UP TO 150 kV (PHOTONS ONLY)

In addition to the requirements listed in Section I above, therapeutic radiation machine facilities which produce only photons with a maximum energy less than or equal to 150 kV shall submit shielding plans which contain, as a minimum, the following additional information:

1. Equipment specifications, including the manufacturer and model number of the therapeutic radiation machine, as well as the maximum technique factors.

2. Maximum design workload for the facility including total weekly radiation output, [expressed in gray (rad) or air kerma at 1 meter], total beam-on time per day or week, the average treatment time per patient/human research subject, along with the anticipated number of patients to be treated per day or week.

3. A facility blueprint/drawing indicating: scale [0.25 inch = 1 foot is typical]; direction of North; normal location of the therapeutic radiation machine's radiation port(s); the port's travel and traverse limits; general direction(s) of the useful beam; locations of any windows and doors; and the location of the therapeutic radiation machine control panel. If the control panel is located inside the therapeutic radiation machine treatment room, the location of the operator's booth shall be noted on the plan and the operator's station at the control panel shall be behind a protective barrier sufficient to ensure compliance with A.2.3.

4. The structural composition and thickness or lead/concrete equivalent of all walls, doors, partitions, floor, and ceiling of the room(s) concerned.

5. The type of occupancy of all adjacent areas inclusive of space above and below the room(s) concerned. If there is an exterior wall, show distance to the closest area(s) where it is likely that individuals may be present.

III. THERAPEUTIC RADIATION MACHINES OVER 150 kV

In addition to the requirements listed in Section I above, therapeutic radiation machine facilities which produce photons with a maximum energy in excess of 150 kV and/or electrons shall submit shielding plans which contain, as a minimum, the following additional information:

1. Equipment specifications including the manufacturer and model number of the therapeutic radiation machine, and gray (rad) at the isocenter and the energy(s) and type(s) of radiation produced [ie: photon, electron]. The target to isocenter distance shall be specified.

2. Maximum design workload for the facility including total weekly radiation output [expressed in gray (rad) at 1 meter], total beam-on time per day or week, the average treatment time per patient, along with the anticipated number of patients to be treated per day or week.

3. Facility blueprint/drawing [including both floor plan and elevation views] indicating relative orientation of the therapeutic radiation machine, scale [0.25 inch = 1 foot is typical], type(s), thickness and minimum density of shielding material(s), direction of North, the locations and size of all penetrations through each shielding barrier [ceiling, walls and floor], as well as details of the door(s) and maze.

4. The structural composition and thickness or concrete equivalent of all walls, doors, partitions, floor, and ceiling of the room(s) concerned.

5. The type of occupancy of all adjacent areas inclusive of space above and below the room(s) concerned. If there is an exterior wall, show distance to the closest area(s) where it is likely that individuals may be present.

6. Description of all assumptions that were in shielding calculations including, but not limited to, design energy [ie: room may be designed for 6 MV unit although only a 4 MV unit is currently proposed], work-load, presence of integral beam-stop in unit, occupancy and use(s) of adjacent areas, fraction of time that useful beam will intercept each permanent barrier [walls, floor and ceiling] and "allowed" radiation exposure in both restricted and unrestricted areas.

7. At least one example calculation which shows the methodology used to determine the amount of shielding required for each physical condition [ie: primary and secondary/leakage barriers, restricted and unrestricted areas, small angle scatter, entry door(s) and maze] and shielding material in the facility. If commercial software is used to generate shielding requirements, also identify the software used and the version/revision date.

IV. NEUTRON SHIELDING

In addition to the requirements listed in Section III above, therapeutic radiation machine facilities which are capable of operating above 10 MV shall submit shielding plans which contain, as a minimum, the following additional information:

1. The structural composition, thickness, minimum density and location of all neutron shielding material.

2. Description of all assumptions that were used in neutron shielding calculations including, but not limited to, neutron spectra as a function of energy, neutron fluence rate, absorbed dose and dose equivalent (due to neutrons) in both restricted and unrestricted areas.

3. At least one example calculation which shows the methodology used to determine the amount of neutron shielding required for each physical condition [ie: restricted and unrestricted areas, entry door(s) and maze] and neutron shielding material utilized in the facility. If commercial software is used to generate shielding requirements, also identify the software used and the version/revision date.

4. The method(s) and instrumentation which will be used to verify the adequacy of all neutron shielding installed in the facility.

V. REFERENCES

1. NCRP Report 49, "Structural Shielding Design and Evaluation for Medical Use of X Rays and Gamma Rays of Energies Up to 10 MeV" (1976).

2. NCRP Report 51, "Radiation Protection Design Guidelines for 0.1-100 MeV Particle Accelerator Facilities" (1977).

3. NCRP Report 79, "Neutron Contamination from Medical Electron Accelerators" (1984).

RULES AND REGULATIONS FOR THE CONTROL OF RADIATION

(R23-1.3-RAD)

ANNEX

RADIATION CONTROL AGENCY FORMS

JUNE 1978

As Amended:

February 1979
June 1981
October 1984
February 1994

RHODE ISLAND RADIATION CONTROL AGENCY

NOTICE TO EMPLOYEES

STANDARDS FOR PROTECTION A. AINST RADIATION. NOTICES.
INSTR. CTIONS AND REPORTS TO . OR. ERS.INSPECTIONS

IN THE RHODE ISLAND R. LES AND RE. . LATIONS FOR THE CONTROL OF RADIATION. THE RHODE ISLAND RADIATION CONTROL A. ENC. HAS ESTA. LISHED STANDARDS FOR . O. R PROTECTION A. AINST RADIATION HA. ARDS. IN THE RHODE ISLAND R. LES AND RE. . LATIONS FOR THE CONTROL OF RADIATION. THE RHODE ISLAND RADIATION CONTROL A. ENC. HAS ESTA. LISHED CERTAIN PROVISIONS FOR THE OPTIONS OF . OR. ERS EN. A. ED IN . OR. . NDER AN A. ENC. LICENSE OR RE. ISTRATION.

. O. R E. PLO. ERS RESPONSI. ILIT.

. . . . . .

. . A. . . . . .

. . P. . . . . R. . . . I. . . . R. . . . . C. . . . . A. . . . . .

. . P. . . . N. . . . . V. . . . . .

. HAT IS COVERED . . THESE RE. . LATIONS

. . .L. . . . . .

. . . . . .

. . P. . . . . .

. . C. . . . . .

. . E. . . . . .

. . O. . . . . A. . . . . .

. . R. . . . . .

. O. R RESPONSI. ILIT. AS A . OR. ER

. . . . . R. . . . I. . . . R. . . . . C. . . . . A. . . . . .

REPORTS ON . O. R RADIATION E.POS. RE HISTOR.

. . T.R. . . . I. . . . R. . . . . C. . . . . A. . . . . T. . . . . S. . . . . A. . . . . A. . . . . T. . . . . .

. . I. . . . . .

. . . . . .

. . . . . .

INSPECTIONS

A. . . . . R. . . . I. . . . R. . . . . C. . . . . A. . . . . I. . . . . R. . . . . C. . . . . A. . . . . .
. . . . . R. . . . I. . . . R. . . . . C. . . . . A. . . . . T. . . . . D. . . . . A. . . . . .
. . . . . .

POSTIN. RE. . IRE. ENT

COPIES OF THIS NOTICE . . ST . E POSTED IN A S. FFICIENT N. . . ER OF PLACES IN EVER. ESTA. LISH. ENT . HERE E. PLO. EES ARE E. PLO. ED IN ACTIVITIES LICENSED OR RE. ISTERED. P. RS. ANT TO PART . OR PART C OF THE RHODE ISLAND R. LES AND RE. . LATIONS FOR THE CONTROL OF RADIATION. . . THE RHODE ISLAND RADIATION CONTROL A. ENC. . TO PER. IT E. PLO. EES . OR. IN. IN OR FRE. . ENTIN. AN. PORTION OF A RESTRICTED AREA TO O. SERVE A COP. ON THE . A. TO OR FRO. THEIR PLACE OF E. PLO. . ENT.

FOR. RCA. . . . . PREVIO. S EDITIONS O. SOLETE

RYYYY YYYAYY RAYYATYYY YYYTRYY AYYYYY

C. . . LATIVE OCC. PATIONAL EPOS. RE HISTOR.

. . NA. E LAST. FIRST. . IDDLE INITIAL.		. . IDENTIFICATION N. . . ER	. .. ID T. PE	. ALE __ . . SE. FE. ALE __	. . DATE OF . IRTH
. . . ONITORIN. PERIOD		. . . LICENSEE OR REGISTRANT NAME	. . LICENSE OR REGISTRATION N. . ER	. . . RECORD __ ESTI. ATE __ NO RECORD	. . . ROUTINE __ PSE
. . . DDE	. . . . LDE DE	. . .. . SDE DE.	. . . SDE.E	. . . CEDE	. .. .. CDE DE	. .. .. TEDE DE	. . .. . TODE DE
. . . ONITORIN. PERIOD		. . . LICENSEE OR REGISTRANT NAME	. . LICENSE OR REGISTRATION N. . ER	. . . RECORD __ ESTI. ATE __ NO RECORD	. . . ROUTINE __ PSE
. . . DDE	. . . . LDE DE	. . .. . SDE DE.	. . . SDE.E	. . . CEDE	. .. .. CDE DE	. .. .. TEDE DE	. . .. . TODE DE
. . . ONITORIN. PERIOD		. . . LICENSEE OR REGISTRANT NAME	. . LICENSE OR REGISTRATION N. . ER	. . . RECORD __ ESTI. ATE __ NO RECORD	. . . ROUTINE __ PSE
. . . DDE	. . . . LDE DE	. . .. . SDE DE.	. . . SDE.E	. . . CEDE	. .. .. CDE DE	. .. .. TEDE DE	. . .. . TODE DE
. . . ONITORIN. PERIOD		. . . LICENSEE OR REGISTRANT NAME	. . LICENSE OR REGISTRATION N. . ER	. . . RECORD __ ESTI. ATE __ NO RECORD	. . . ROUTINE __ PSE
. . . DDE	. . . . LDE DE	. . .. . SDE DE.	. . . SDE.E	. . . CEDE	. .. .. CDE DE	. .. .. TEDE DE	. . .. . TODE DE
. . . ONITORIN. PERIOD		. . . LICENSEE OR REGISTRANT NAME	. . LICENSE OR REGISTRATION N. . ER	. . . RECORD __ ESTI. ATE __ NO RECORD	. . . ROUTINE __ PSE
. . . DDE	. . . . LDE DE	. . .. . SDE DE.	. . . SDE.E	. . . CEDE	. .. .. CDE DE	. .. .. TEDE DE	. . .. . TODE DE
. . . ONITORIN. PERIOD		. . . LICENSEE OR REGISTRANT NAME	. . LICENSE OR REGISTRATION N. . ER	. . . RECORD __ ESTI. ATE __ NO RECORD	. . . ROUTINE __ PSE
. . . DDE	. . . . LDE DE	. . .. . SDE DE.	. . . SDE.E	. . . CEDE	. .. .. CDE DE	. .. .. TEDE DE	. . .. . TODE DE
. . . SI. NAT. RE OF . ONITORED INDIVID. AL		. . . DATE SIGNED	. . . CERTIFICATION OR ANNOTATION	. . . SI. NATURE OF DESIGNEE	. . .. . DATE SIGNED

FOR. RCA. . ... PREVIO. S EDITIONS O. SOLETE

INSTRUCTIONS AND ADDITIONAL INFORMATION PERTINENT TO THE COMPLETION OF FORM RCA-2

(All doses should be stated in rems)

. . T. . . . . .S. . . .III. . . . . .

. . E. . . . . T. . . . . I. . . . . .

. . E. . . . . .

CODE	ID T. PE
SSN	. . S. .S. . S. . . . . N. . . .
PPN	P. . . . . N. . . .
CSI	C. . . . . S. . . . I. . . . . N. . . .
. PN	. . . . P. . . . . N. . . .
IND	INDE. I. . . . . N. . . .
OTH	O. . . .

. . C. . . . . .

. . E. . . . . .DD. . . .

. . E. . . . . T. . . . . .DD. . . . . DD. . .

. . E. . . . . A. . . . . .

. . E. . . . . A. . . . . .

. . P. . . . . R. . . . . E. . . . . N. R. . . . . C. . . . .R. . . . . C. . . . .E. . . . . A. . . . . .. TLD . . . . . .

. . . .P. . . . . R. . . . . PSE. C. . . . .R. . . . . I. . . . . PSE . . . . PSE. . . . . .

. . . .E. . . . . .DDE. . . . . .

. . . .E. . . . . .LDE. . . . . .

. . . .E. . . . . .SDE. . . .

. . . E. . . . . .SDE. . E. .

. . . E. . . . . .CEDE. .

. . . E. . . . . .CDE. . . . . .

. . . .E. . . . . .TEDE. . T. TEDE . . . . . .

. . . .E. . . . . .TODE. . . . . T. TODE . . . . . .

. . . .S. . . . . T. . . . . .

. . . E. . . . . .

. . . . OPTIONAL. . .E. . . . . A. . . . . DOE . . . . . .

. . . . OPTIONAL. . S. . . . . .T. . . . . A. . . . . F. . . RCA. . . . . .

. . . . OPTIONAL. . .E. . . . . .

RHODE ISLAND RADIATION CONTROL AGENCY

OCCUPATIONAL EXPOSURE RECORD FOR A MONITORING PERIOD

. . NA. EAST. FIRST. . IDDLE INITIAL.	. . IDENTIFICATION N. . . ER	. . ID T. PE FE. ALE __	. ALE . . SE.	. . DATE OF . IRTH

. . . ONITORIN. PERIOD	. . LICENSEE OR RE. ISTRANT NA. E	. . LICENSE OR RE. ISTRATION N. . . ER	. A. RECORD ESTI. ATE __	. . . RO. TINE __ PSE __

INTAKES

. . A. RADION. CLIDE	. . . . CLASS	. . C. . ODE	. . D. INTA. E IN

DOSES (in rem)

DEEP DOSE E. . IVALENT .DDE.	. . .
E. E DOSE E. . IVALENT TO THE LENS OF THE E. E .LDE.	. . .
SHALLO. DOSE E. . IVALENT.. HOLE .. ODE.. . . .	.
SHALLO. DOSE E. . IVALENT.. A. E. TED ELT. E. .	.
CO. . ITTED EFFECTIVE DOSE E. . IVALENT CEDE. .	.
CO. . ITTED DOSE E. . IVALENT. . A. I. ALL. E. POSED OR. AN .CDE.	. . .
TOTAL EFFECTIVE DOSE E. . IVALENT .. LOC. S . . . . . TEDE.	. . .
TOTAL OR. AN DOSE E. . IVALENT. . A. OR. AN .. LOC. S . . . . . TODE.	. . .
. . . CO. . ENTS	

. . . SI. NAT. RE . . LICENSEE OR RE. ISTRANT	. . . DATE PREPARED

FOR. RCA. . .. . . . PREVIO. S EDITIONS O. SOLETE

INSTRUCTIONS AND ADDITIONAL INFORMATION PERTINENT TO THE COMPLETION OF FORM RCA-3

(All doses should be stated in rems)

. . T. . . . . .S. . . .III. . . . . .

. . E. . . . . T. . . . . I. . . . . .

. . E. . . . . .

CODE	ID T. PE
SSN	. . S. .S. . S. . . . . N. . . .
PPN	P. . . . . N. . . .
CSI	C. . . . . S. . . . I. . . . . N. . . .
. PN	. . . . P. . . . N. . . .
IND	INDE. I. . . . . N. . . .
OTH	O. . . .

. . C. . . . . .

. . E. . . . . .DD. . . .

. . E. . . . . T. . . . . .DD. . . . . DD. . . .

. . E. . . . . .

. . E. . . . . A. . . . . .

. A. P. . . . . R. . . . . E. . . . . C. . . . .R. . . . . C. . . . .E. . . . . A. . . . . TLD . . . . . .

. . . P. . . . . R. . . . . PSE. C. . . . .R. . . . . C. . . . .PSE. . . . . I. . . . . PSE . . . . . PSE. .

. . A. E. . . . . C. . . . . T. . . . . .

. . . . E. . . . . A. . . . . P. . . A .D. . . . .V. . . O . . . . . .

. . C. E. . . . . F. . . . . .H. .F. . . . . .F. . . . . .F. . . . . .

. . D. E. . . . . µC..

. . . . .E. . . . . .DDE. . . . . .

. . . .E. . . . . .LDE. . . . . .

. . . .E. . . . . .SDE.. . . .

. . . E. . . . . .SDE.. E. .

. . . E. . . . . .CEDE. . . .NR. . . . .N. . R. . . . . .NC. . . . .N. . C. . . . . .

. . . E. . . . . .CDE. . . . . .NR. . . . .N. . R. . . . . .NC. . . . .N. . C. . . . . .

. . . .E. . . . . .TEDE.. T. TEDE . . . . . .

. . . E. . . . . .TODE. . . . . T. TODE . . . . . .

. . . .S. . . . . .

. . . E. . . . . .

. . . CO. . ENTS.
I. . . . . A. . . . . SDE.. E . . . . . A. . . . . A. . . . . .