THERATRONICS
International Limited

November 24, 1997

U.S. Nuclear Regulatory Commission
Washington, D.C. 20555
Attention: Doug Broaddus
Mail Stop T8-F5

Subject: Submission of Supplemental Data For Device Approval and Amendment of Device Safety Registrations

Further to our telephone conversation of last week, enclosed please find sample head radiation survey reports for the Theratron 780E and T1000E therapy units models.

I trust that the information will satisfy you requirements. Failing that, please call, fax or E-Mail at (613) 591-2177, 592-3816 or beatty.d@theratronics.com respectively.

Yours truly,

C.D. Beatty
Regulatory Affairs

Enclosures:

413 March Road
P.O. Box 13140
Kanata Ontario Canada
K2K 2B7
(613) 591-2100
Fax (613) 592-3816

ISO 9001-1994 QMI REGISTERED QUALITY SYSTEM Cert # 001890
Kanata, Ontario, Canada

SURVEY RECORD

for

MODEL 1780 E

SERIAL No. 608

CUSTOMER Ludlum

LOCATION Egypt

P.S. 46577

SURVEYED BY W. S. Cralg

TITLE RADIOGRAPHER

CHECKED [illegible]
P. Gabel (QA)

Surveyed in accordance with ICRP15

SURVEY No. 058-3UT SURVEY DATE APR 16/97

THERATRONICS

QA-001-O

CAPACITY CALCULATIONS

ICRP-15*

CAPACITY (1metre) = $\frac{⑦ \times 2}{\text{Highest reading at 1m} \times ④}$

= 233.0 Rmm(ICRU).

CAPACITY (5cm) = $\frac{⑦ \times 20}{\text{Highest reading at 5cm} \times ⑤}$

= 361.0 Rmm(ICRU).

Maximum Curie Capacity Based on Lowest Calculated Capacity × 67 Curies/Rmm(ICRU). 15.611 Curies.

NCRP-33*

CAPACITY (Av. Field) = $\frac{⑦ \times 52}{\text{Total readings} \times ④}$

= _____ Rmm(ICRU)

CAPACITY (Hot-spot) = $\frac{⑦ \times 10}{\text{Highest reading at 1m.} \times ④}$

= _____ Rmm(ICRU)

Maximum Curie Capacity Based on Lowest Calculated Capacity × 67 Curies/Rmm(ICRU) _____ Curies.

*ICRP-15 Based on limits of 2mrh. at 1 metre & 20mrh. at 5cm.
*NCRP-33 Based on average field of 2mrh. at 1 metre & hot-spot field of 10mrh. at 1 metre.

QA-021-O

SURVEY DATA

Meter Type 1. Victoreen 660 2. Victoreen 440

Serial Number 1. 1049 2. 1854

Calibration Date 1. MAR 6/97 2. MAR 6/97

Background V660=0.2 V440=.02 mrh. or less

Temperature 22 °C.

Barometric Pressure 100.8 kPa.

① Temp. Press. Correct. Factor 1.01

② Meter Correct. Factor 1 1.00 2 1.00

③ Distance Correct. Factor 1.00

④ Total Correct. Factor 1. 1.01

⑤ Total Correct. Factor 2. 1.01

⑥ Source Output on SEPT 19/96 (date) 216.1 Rmm. (ICRU)

⑦ Source Output on Survey Date 200.3 Rmm. (ICRU)

Decay Factor .9267

SOURCE & HEAD DATA

NOTE: The radioactive source (Type C-146) & the source drawer (Standard with uranium plug) described below is a control assembly used specifically for survey procedures.

SOURCE SERIAL No. S-4938

RADIOACTIVE MATERIAL Co^{60}

SOURCE DIAMETER 2cm

SOURCE DRAWER No. G9095-051-6

DRAWER DIAMETER 2.4755"

BORE DIAMETER 2.5005 - 2.5007

HEAD SERIAL No. 058-3 UT

Non-standard features of source head _____

SURVEY RECORD

for

MODEL Ti000 E

SERIAL No. 44

CUSTOMER CIS

LOCATION ATHENS, GREECE

P.S. 46570

SURVEYED BY W B CRAIG

TITLE Radiographer

CHECKED P. Cobill

P. COBILL QA

Surveyed in accordance with ICRP 15

SURVEY No. 059-1W SURVEY DATE May 7/97

THERATRONICS

QA-001-0

CAPACITY CALCULATIONS

ICRP-15*

CAPACITY (1metre) = ⑦ × 2 / Highest reading at 1m × ④

= 249.0 Rmm(ICRU).

CAPACITY (5cm) = ⑦ × 20 / Highest reading at 5cm × ⑤

= 331.0 Rmm(ICRU).

Maximum Curie Capacity Based on Lowest Calculated Capacity × 67 Curies/Rmm(ICRU). 16683 Curies.

~~NCRP-33*~~

~~CAPACITY (Av. Field) = ⑦ × 52 / Total readings × ④~~

~~= ______ Rmm(ICRU)~~

~~CAPACITY (Hot-spot) = ⑦ × 10 / Highest reading at 1m. × ④~~

~~= ______ Rmm(ICRU)~~

~~Maximum Curie Capacity Based on Lowest Calculated Capacity × 67 Curies/Rmm(ICRU) ______ Curies.~~

*ICRP-15 Based on limits of 2mrh. at 1 metre & 20mrh. at 5cm.

*NCRP-33 Based on average field of 2mrh. at 1 metre & hot-spot field of 10mrh. at 1 metre.

QA-021-0

SURVEY DATA

Meter Type 1. VICTOREEN 660 2. VICTOREEN 440

Serial Number 1. 1049 2. 1854

Calibration Date 1. MAR 6/97 2. MAR 6/97

Background V660 = 0.2 V440 = 0.02 mrh. or less

Temperature 20 °C.

Barometric Pressure 101.3 kPa.

① Temp. Press. Correct. Factor 1.00

② Meter Correct. Factor 1 1.00 2 1.00

③ Distance Correct. Factor 1.00

④ Total Correct. Factor 1. 1.00

⑤ Total Correct. Factor 2. 1.00

⑥ Source Output on SEP 19/96 (date) 216.1 Rmm. (ICRU)

⑦ Source Output on Survey Date 198.8 Rmm. (ICRU)

Decay Factor .9200

SOURCE & HEAD DATA

NOTE: The radioactive source (Type C-146) & the source drawer (Standard with uranium plug) described below is a control assembly used specifically for survey procedures.

SOURCE SERIAL No. S-4938

RADIOACTIVE MATERIAL Co 60

SOURCE DIAMETER 2 cm

SOURCE DRAWER No. G9095-051-6

DRAWER DIAMETER 2.4755"

BORE DIAMETER 2.5008"/2.501"

HEAD SERIAL No. 059-1W

Non-standard features of source head

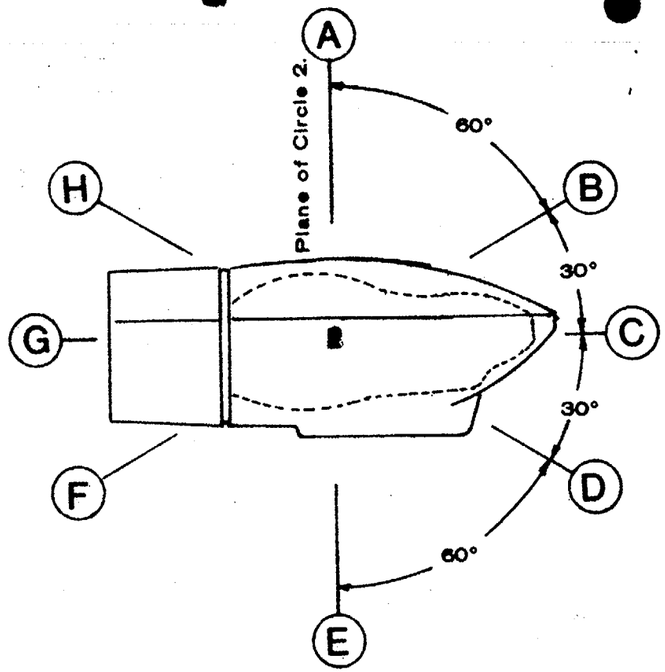

Circle 1.

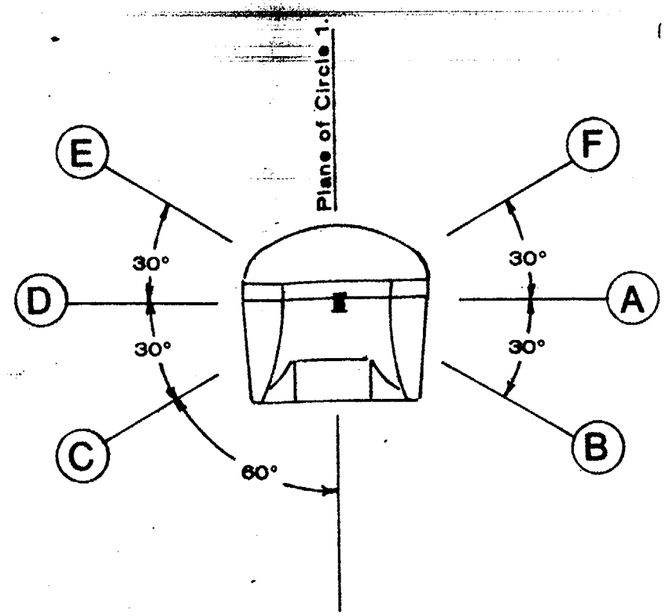

Circle 2.

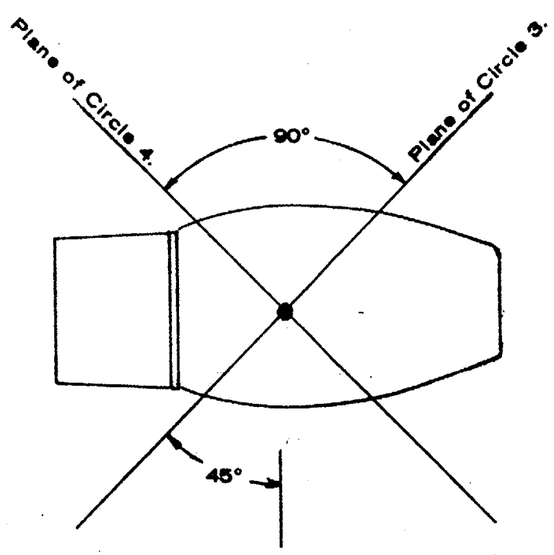

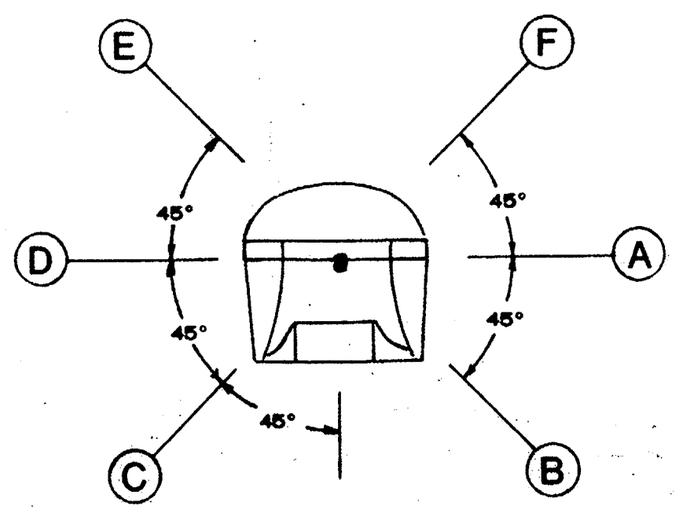

Circles 3&4.

READINGS (SOURCE OFF).

AT ONE METRE FROM BOTTOM FACE OF SOURCE

Point	A	B	C	D	E	F	G	H
Circle 1	1.2	0.3	1.7	0.3	1.2	0.7	1.2	0.8
Circle 2	0.9	1.0	1.1	1.0	0.8	0.7	Meter typ	
Circle 3	0.8	0.9	1.3	0.9	0.6	0.4	V660	
Circle 4	0.9	1.4	0.9	0.8	0.4	0.6		
Total								

AT 5cm FROM SURFACE OF UNIT*

Point	A	B	C	D	E	F	G	H
Circle 1	11.0				8.0			
Circle 2							Meter typ	
Circle 3							V440	
Circle 4								

*Covers fitted to unit

Highest reading at 1 metre 1.7 mrh. located C-1

Highest reading at 5cm 11.0 mrh located A-1

Comments

A302402/100

QA-0245-0

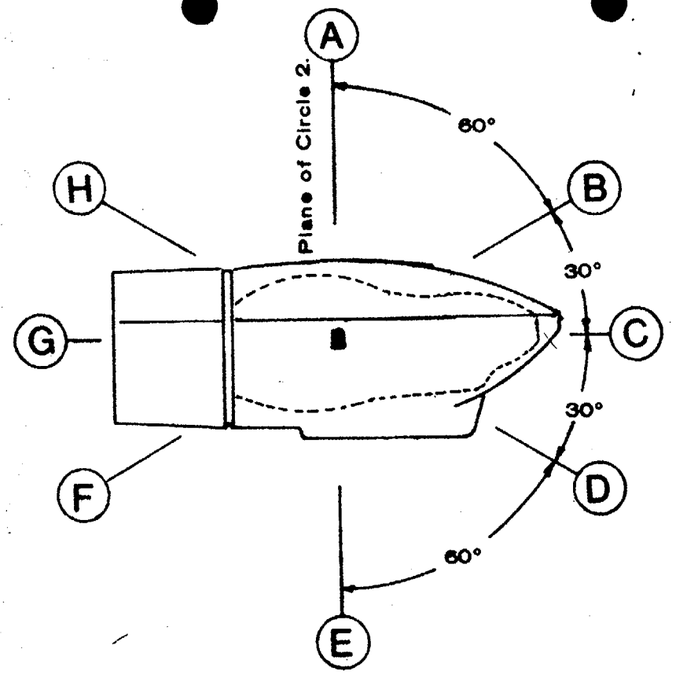

Circle 1.

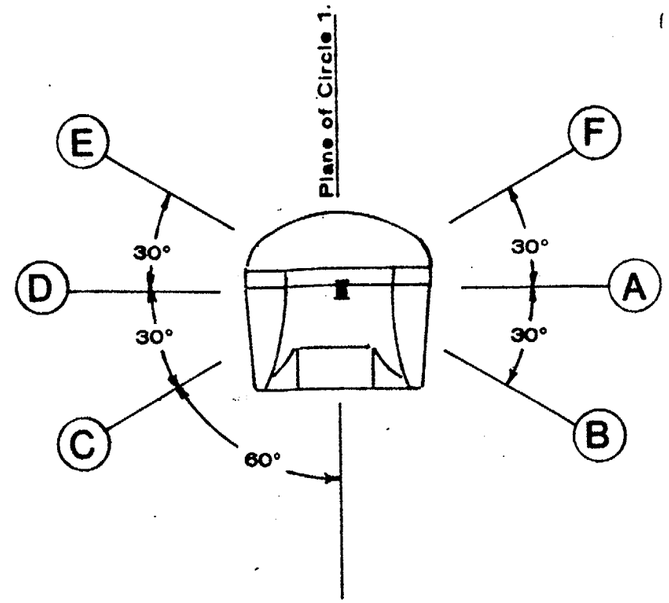

Circle 2.

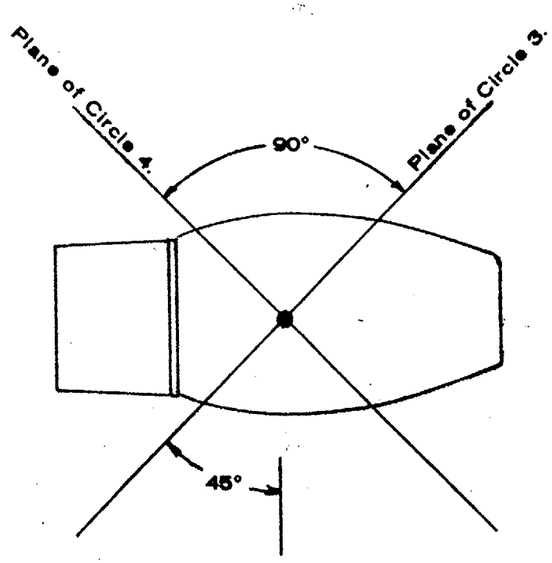

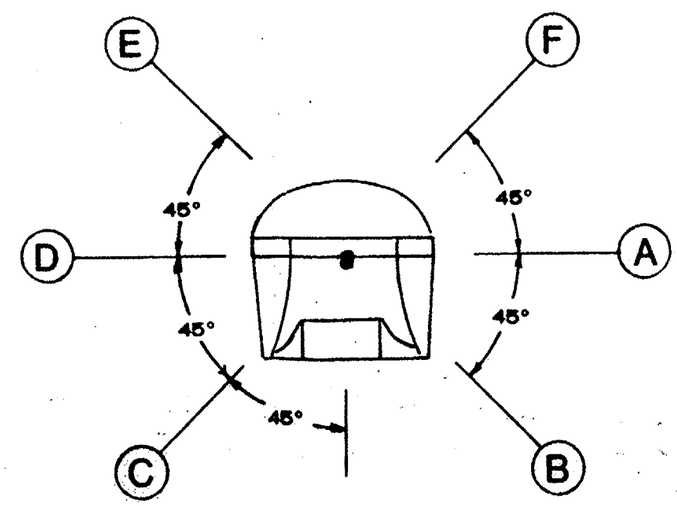

Circles 3&4.

READINGS (SOURCE OFF).

AT ONE METRE FROM BOTTOM FACE OF SOURCE

Point	A	B	C	D	E	F	G	
Circle 1	1.2	0.4	1.4	0.4	1.1	0.7	1.2	1.
Circle 2	1.3	1.3	1.2	1.2	0.8	0.9	Meter ty	
Circle 3	1.0	1.0	1.5	0.9	0.7	0.5	V-66	
Circle 4	0.9	1.6	1.0	1.0	0.5	0.7		
Total								

AT 5cm FROM SURFACE OF UNIT *

Point	A	B	C	D	E	F	G	
Circle 1	12.0				8.0			
Circle 2							Meter ty	
Circle 3							V-44	
Circle 4								

*Covers fitted to unit

Highest reading at 1 metre 1.6 mrh. located B 4

Highest reading at 5cm 12.0 mrh located A 1

Comments

QA-024-0

A3.02402/100