DPC

NRC FORM 464 Part I
(6-1998)

U.S. NUCLEAR REGULATORY COMMISSION

RESPONSE TO FREEDOM OF INFORMATION ACT (FOIA) / PRIVACY ACT (PA) REQUEST

FOIA/PA	RESPONSE NUMBER
2000-0096	3

RESPONSE TYPE ☐ FINAL ☑ PARTIAL

REQUESTER: Mr. Jim Warren

DATE: FEB 28 2000

PART I. -- INFORMATION RELEASED

- ☐ No additional agency records subject to the request have been located.
- ☐ Requested records are available through another public distribution program. See Comments section.
- ☐ APPENDICES: Agency records subject to the request that are identified in the listed appendices are already available for public inspection and copying at the NRC Public Document Room.
- ☑ APPENDICES: G — Agency records subject to the request that are identified in the listed appendices are being made available for public inspection and copying at the NRC Public Document Room.
- ☐ Enclosed is information on how you may obtain access to and the charges for copying records located at the NRC Public Document Room, 2120 L Street, NW, Washington, DC.
- ☑ APPENDICES: G — Agency records subject to the request are enclosed.
- ☐ Records subject to the request that contain information originated by or of interest to another Federal agency have been referred to that agency (see comments section) for a disclosure determination and direct response to you.
- ☑ We are continuing to process your request.
- ☐ See Comments.

PART I.A -- FEES

AMOUNT *: $

* See comments for details

- ☐ You will be billed by NRC for the amount listed.
- ☐ You will receive a refund for the amount listed.
- ☐ None. Minimum fee threshold not met.
- ☐ Fees waived.

PART I.B -- INFORMATION NOT LOCATED OR WITHHELD FROM DISCLOSURE

- ☐ No agency records subject to the request have been located.
- ☐ Certain information in the requested records is being withheld from disclosure pursuant to the exemptions described in and for the reasons stated in Part II.
- ☐ This determination may be appealed within 30 days by writing to the FOIA/PA Officer, U.S. Nuclear Regulatory Commission, Washington, DC 20555-0001. Clearly state on the envelope and in the letter that it is a "FOIA/PA Appeal."

PART I.C COMMENTS (Use attached Comments continuation page if required)

SIGNATURE - FREEDOM OF INFORMATION ACT AND PRIVACY ACT OFFICER

Carol Ann Reed Natalie Brown for

Re: FOIA-2000-0096

APPENDIX G

RECORDS BEING RELEASED IN THEIR ENTIRETY
(If copyrighted identify with*)

NUMBER	DATE		DESCRIPTION/PAGES
1.	04/22/99	CP&L	Design Basis Document - Fuel Handling Building and Waste Processing Building HVAC System (65 pages)
2.	08/24/98	CP&L	Design Basis Document - Component Cooling Water System (19 pages)
3.	12/08/98	CP&L	Design Basis Document - Service Water System (46 pages)
4.	06/29/99	CP&L	Design Basis Document - Fuel Pool Cooling and Cleanup System (25 pages)
5.	02/10/99	CP&L	Design Basis Document - Fuel Handling System (18 pages)
6.	12/29/99	CP&L	Design Basis Document - Residual Heat Removal System (39 pages)
7.	10/01/98	CP&L	Plant Operating Manual - Fuel Handling Building HVAC System (52 pages)
8.	11/09/95	CP&L	Plant Operating Manual - Component Cooling Water System (34 pages)
9.	11/13/98	CP&L	Plant Operating Manual - Service Water System (31 pages)
10.	01/16/98	CP&L	Plant Operating Manual - Residual Heat Removal System (29 pages)

CAROLINA POWER & LIGHT COMPANY

SHEARON HARRIS NUCLEAR POWER PLANT

PLANT OPERATING MANUAL

VOLUME 6

PART 2

PROCEDURE TYPE: System Description

NUMBER: SD-111

TITLE: Residual Heat Removal System

REVISION 9

RECEIVED
JAN 1 6 1998
HNP
DOCUMENT CONTROL

B/10

Table of Contents

Section		Page
1.0	SYSTEM PURPOSE	3
2.0	SYSTEM FUNCTION	3
3.0	COMPONENTS	5
3.1	Residual Heat Removal Heat Exchangers	5
3.2	Residual Heat Removal Pumps	5
3.3	Motor Operated Valves	6
3.4	Air Operated Valves	6
3.5	Relief Valves	7
3.6	Pressure Instruments	8
3.7	Differential Pressure Instruments	8
3.8	Flow Instruments	8
3.9	Vibration Instruments	9
3.10	Motor Current Instruments	10
3.11	Temperature Instruments	10
4.0	OPERATIONS	10
4.1	Plant Heatup	10
4.2	Start Up and Power Operation	11
4.3	Accident Operation	11
4.4	Plant Cooldown	11
4.5	Outage Support	12
4.6	Special Interlocks and Control Loops	14
4.7	Limiting Conditions for Operation	15
5.0	INTERFACE SYSTEMS	17
5.1	Systems Required for Support	17
5.2	System-to-System Cross Ties	17
6.0	TABLES	18
6.1	Electrical Power Supplies for RHRS Motor Operated Valves	19
6.2	Electrical Power Supplies for RHRS Air/Solenoid Operated Valves	20
7.0	FIGURES	21
7.1	Residual Heat Removal System	22
7.2	Critical Mid-Loop Elevations	23
7.3	RHR Pump 1A-SA Performance Curve	24
7.4	RHR Pump 1B-SB Performance Curve	25
8.0	REFERENCES	26
8.1	Drawings	26
	8.1.1 Flow Diagrams	26
	8.1.2 Control Wiring Diagrams	26
	8.1.3 General Plans	27
	8.1.4 Manufacturers Drawings (EMDRAC)	28
8.2	Technical Manuals	28
8.3	Other	28

1.0 SYSTEM PURPOSE

The primary function of the Residual Heat Removal System (RHRS) is to remove sensible heat from the Reactor Coolant System (RCS) during plant cooldown and refueling operations. This sensible heat load consists of residual decay heat from the reactor core and heat from operating reactor coolant pumps.

As a secondary function, the RHRS is used to transfer water between the refueling water storage tank and the refueling cavity at the beginning and end of refueling operations.

The RHRS also functions in conjunction with the Safety Injection System (SIS) to deliver borated water from the Refueling Water Storage Tank (RWST) or containment sumps to the Reactor Coolant System during various accident conditions. This aspect of RHR Operation is covered in more detail by the Safety Injection System Description (SD-110).

A simplified flow diagram of the Residual Heat Removal System is shown on Figure 7.1.

2.0 SYSTEM FUNCTION

CAUTION

Setpoints given in this SD are for reference only. Actual values should be obtained from a controlled setpoint document.

NOTE: Various portions of the procedure utilize the convention of listing the A train instrument, etc. and denoting the B train instrument/valve, with the same function, using parenthesis.

The RHRS consists of two residual heat removal pumps and two residual heat removal heat exchangers which facilitate the removal of sensible heat from the Reactor Coolant System. These pumps and heat exchangers are arranged in two independent and functionally identical cooling loops or safety trains. To assure reliability, each train (including pumps and valves) is powered from a different vital bus. During system operation, the RHR pumps draw suction on the RCS hot legs, either Loop 1 or 3, and discharge through the RHR heat exchangers. Here, the sensible heat is transferred from the reactor coolant (tubeside) to the component cooling water (shell side). The coolant is then returned to the RCS cold legs (Loops 1, 2, and 3) via the Safety Injection System cold leg injection lines.

2.0 SYSTEM FUNCTION (continued)

Two motor-operated valves in series in each line isolate the two RHRS suction pipes from the RCS hot legs (Loop 1 valves 1RH-1 and 1RH-2 and Loop 3 valves 1RH-39 and 1RH-40), while the three discharge lines are isolated from the RCS cold legs (Loops 1, 2, and 3) by two check valves in series in each line. Relief valves protect the RHRS against over pressurization should any of the above isolations fail.

The RHRS is designed to reduce the temperature of the reactor coolant from 350F to 140F within 17 hours assuming that both trains (two RHR heat exchangers and two RHR pumps) are in service, each RHR heat exchanger is supplied with CCW at the design flow rate and maximum design temperature (105F). It is interesting to note that under these conditions the reactor coolant temperature would be initially reduced from 350F to 212F within the first 3 hours; then as differential temperature is reduced, the rate of cooldown decreases exponentially. The heat load assumptions used in the design of the RHRS is based on the decay heat that exists 20 hours following shutdown from an extended run at full power or 60.6 x 10^6 BTU/hr. With one train available (one RHR heat exchanger and one RHR pump) the RHRS can reduce the reactor coolant temperature from 350F to 200F within 30 hours. The cooldown time to 212F at these conditions is approximately 19 hours.

During plant cooldown, heatup, or cold shutdown, a portion of the reactor coolant flowing through the RHRS may be diverted to the Chemical and Volume Control System (CVCS) low pressure letdown line for cleanup and/or pressure control. The RCS volume and subsequent pressure can be controlled by regulating the coolant return flow from the RHRS and the coolant returned to the RCS by the charging/SI pumps. RCS pressure control is necessary to meet the nilductility limits of the reactor vessel, the reactor coolant pump number 1 seal differential pressure and the NPSH requirement of reactor coolant pumps.

Prior to refueling, the RHRS can be utilized to transfer borated water from the RWST to the refueling cavity. In this mode the suction of the RHR pumps is transferred from the RCS hot legs to the RWST after the vessel head is lifted. Water from the pumps then begins to overflow the reactor vessel and proceeds to fill the refueling cavity after the head is withdrawn. After refueling is completed, the RHR pumps draw suction from the RCS hot legs and discharge to the RWST until the water in the refueling cavity is lowered, in a similar manner, until the vessel head can be reinstalled. The RHRS is then placed in normal operation while the vessel head is secured.

NOTE: Harris typically floods up with High Head Safety Injection (HHSI) to minimize the effect on water clarity. The method described in this system description is functionally how the RHR system could be utilized to perform the task.

2.0 SYSTEM FUNCTION (continued)

The RHRS augments the Safety Injection System subsequent to a loss of coolant accident by providing borated emergency cooling water in two phases of operation, injection, and recirculation. During normal plant operation, the RHRS is in a state of readiness to perform its safety injection function. Following a safety injection actuation signal, the RHRS functions as the Low Head Safety Injection System, pumping water from the RWST into the RCS cold legs when reactor coolant pressure decreases below the RHR pump shutoff head (~140 psig). In the recirculation phase of operation, the RHR pumps draw suction from the containment sump where spilled reactor coolant and injection phase water have accumulated. The RHR pumps discharge through the RHR heat exchangers and then to the Reactor Coolant System and/or to the CVCS charging/SI pumps suction. Approximately 6 hours after a loss-of-coolant accident, the recirculation is switched from the cold legs to the hot legs to minimize precipitation of boron in the reactor vessel upper internals. Thereafter recirculation is alternated between cold leg and hot leg every 6 hours. The Safety Injection System Description covers this aspect of RHRS operation in more detail.

3.0 COMPONENTS

3.1 Residual Heat Removal Heat Exchangers

Two RHR heat exchangers are installed in the system. These heat exchangers are of the shell and U-tube type with reactor coolant circulating through the tubes and component cooling water circulating through the shell. Each heat exchanger is designed to transfer heat at the rate of 30.3×10^6 BTU/hr or roughly one half of the heat produced by the core 20 hours after shutdown from full power. The tubes and other surfaces in contact with reactor coolant are stainless steel while the shell is carbon steel. The tubes are welded to the tube sheet to prevent leakage of reactor coolant. The RHR heat exchangers are located on the 236' elevation of the RAB and extend vertically above the 261' elevation.

3.2 Residual Heat Removal Pumps

The two RHR pumps are located on the 190' elevation of the RAB, adjacent to the recirculating valve chambers. These Ingersoll-Rand pumps are centrifugal units with mechanical seals to prevent reactor coolant leakage. The seal water is cooled* by a small heat exchanger (attached) that has component cooling water on the shell side. All pump surfaces in contact with reactor coolant are austenitic stainless steel or an equivalent corrosion resistant material. These pumps which have pressure and temperature ratings of 600 psig and 400F respectively, are designed to deliver 3,750 gpm at 240 feet of head. The technical specification minimum flow is 3663 gpm at 100 psid. Each pump is driven by a Westinghouse 300 HP, 3 phase, squirrel cage induction motor. Pump 1A-SA is powered from 480V Emergency Bus 1A2-SA compt 5A while pump 1B-SB is powered from 480V Emergency Bus 1B2-SB compt 2B. Both pumps have Manual/Auto controls on the MCB panel 1A1 right desk section, and on the ACP.

NOTE: *Seal water cooling is essential for long term seal integrity if the RHR pump discharge water temperature is greater than 225F. The seals could operate satisfactorily during the injection phase of LHSI without cooling, but would degrade rapidly and eventually fail if the inlet water was greater than 225F and seal cooling was not restored.

3.3 Motor Operated Valves

Power supplies for all motor-operated valves are given in Table 6.1.

3.3.1 1RH-2, 1RH-40, 1RH-1, 1RH-39, RHR Inlet Isolation Valves

These motor-operated, twelve-inch gate valves are located in the two lines leading from the RCS Loops 1 and 3 hot legs to the suctions of the RHR pumps. A control switch for each valve is provided on the MCB panel 1A1 right desk section and on the ACP. Two of these valves (1RH-1 and 1RH-40) have alternate power supplies, control switches, etc., that can be rewired if the primary train malfunctions.

NOTE: Also see Section 4.6.1

3.3.2 1RH-31, 1RH-69, Miniflow Stop Valves

These motor-operated, three-inch gate valves are located in the RHR pump miniflow line. A control switch for each valve is provided on the MCB panel 1A1 right desk section and on the ACP. The valves open on low flow (749.6 gpm) and shut on high flow (1402.6 gpm) as determined by FIS-01-RH-602A(B) (Section 4.6.2).

3.3.3 1RH-25, 1RH-63, RHR to CVCS Isolation Valves

These motor-operated, eight-inch gate valves are located in the lines leading from the RHR heat exchangers outlets to the suction of the charging/SI pumps. A control switch for each valve is located on the MCB panel 1A2 center desk section and on the ACP.

3.4 Air-Operated Valves

Power supplies for all air-operated valves are given in Table 6.2.

3.4.1 1RH-30, 1RH-66, RHR Heat Exchanger Flow Control Valves

These air-operated, ten-inch butterfly valves are located in the outlet lines of the RHR heat exchangers. A manual control station for each valve is provided on the MCB panel 1A1 right desk section and on the ACP. The fail position is OPEN. These are not isolation valves and will allow flow (200-300 gpm) in the SHUT position which can result in an unwanted RCS cooldown in some situations. This problem primarily exists when securing the reactor coolant pumps (approximately 3 mw each) when the RCS-RHR heat load must be rebalanced without affecting the cooldown rate.

To manually limit flow to 2500 GPM during mid loop or reduced inventory conditions, handwheels which limit the opening of these valves are installed on these valves. The position of these handwheels is set by operations.

3.4.2 1RH-20, 1RH-58, RHR Heat Exchanger Bypass Flow Control Valves

These air-operated, eight-inch butterfly valves are located in the RHR heat exchangers bypass lines. A manual control station for each valve is provided on the MCB panel 1A1 right desk section and on the ACP. These valves have an automatic function which will control "total" flow as heat exchanger flow is modulated. The fail position is SHUT. These are not isolation valves and will allow flow (100-200 gpm) in the SHUT position.

3.5 Relief Valves

3.5.1 1RH-7, 1RH-45, Pump Suction Line Relief Valves

These three-inch relief valves are located in the lines leading from the RCS Loops 1 and 3 hot legs to the suctions of the RHR pumps. Each valve is sized to pass the combined flow of three charging/SI pumps operating against a pressure in the RCS equivalent to the relief valve set pressure of 450 psig. The valves are located in the Containment Building and discharge to the PRT. Future plans include lowering the setpoints to allow additional protection for the RCS (overlap LTOPs setpoints) and installation of downstream thermocouples to warn the operators if the reliefs lift.

3.5.2 1RH-120, 1RH-121, Inlet Piping Relief Valves

These three-quarter inch relief valves are located in the lines leading from the RCS Loops 1 and 3 hot legs to the suctions of the RHR pumps. The valves are located in the Containment Building and discharge to the PRT. Each relief valve is between the inlet isolation valves (1RH-1 and 1RH-2) or (1RH-39 and 1RH-40) to prevent overpressurization of the piping between the isolation valves if a volumetric expansion occurs due to heat, set pressure 2485 psig.

3.6 Pressure Instruments

3.6.1 PT-600A (B), RHR Pumps Discharge Pressure

These pressure transmitters, located at the discharge of RHR pump A and B, provide inputs to their respective indicators (PI-600A, PI-600B) on the MCB panel 1A1 right vertical section. The range of these indicators is 0-700 psig. These pressure transmitters also provide signals to ERFIS points PRH0600A and PRH0600B.

3.7 Differential Pressure Instruments

3.7.1 PDT-5450A (B), RHR Pump Differential Pressure

These differential pressure transmitters are located across the RHR pump suction and discharge and are used to determine RHR pump performance. These instruments, originally installed to provide the operator with additional information during periods of possible cavitation (mid-loop operation), can be used whenever the pump is in operation. These indicators have ranges of 0-200 psid and provide inputs to their respective indicators (PDI-5450A and PDI-5450B) on the MCB panel 1A1 right vertical section. These differential pressure transmitters also have companion ERFIS points PRH5450A and PRH5450B which drive ALB alarms (ALB-4 window 4-5 and 5-5) whenever pump differential pressure drops below previously defined limits of acceptable operation.

3.8 Flow Instruments

3.8.1 FE-605A (B), RHR Heat Exchangers Outlet Flow

These flow orifices are located on the outlet lines of the RHR heat exchangers. Flow transmitters, FT-605A and FT-605B, sense the differential pressure across these orifices and provide flow measurement inputs to their respective indicators (FI-605A1 and FI-605B1) on the MCB panel 1A1 right vertical section. Indication is also provided on the ACP (FI-605A2 and FI-605B2). These indicators have ranges of 0-5000 gpm. The transmitters, FT-605A and FT-605B, are utilized to provide inputs for the automatic modulation of flow control valves 1RH-20 and 1RH-58 and provide an ALB (ALB-4 window 1-5) alarm if flow is below the lowest recommended continuous flow (1200 gpm). These loops are calibrated for 350F operation. Since RHR temperature can vary significantly, the indicated flow versus the actual flow can also vary significantly for curves of indicated flow versus temperature when the actual flow is 3663 gpm.

The flow loops provide ERFIS computer inputs for temperature compensated and non-temperature compensated computer points for each train.

3.8.1 FE-605A (B), RHR Heat Exchangers Outlet Flow (continued)

The traditional ERFIS computer point for flow mirrors the MCB indicator (1 for 1 correlation) as follows:

FT-605A = FRH0605A
FT-605B = FRH0605B

The temperature compensated ERFIS displays are based on the flow input signal from FT-605A (FT605B) and the RHR heat exchanger exit temperature TE-606A (TE-606B). These ERFIS point displays provide the most accurate display of mass flow to the operator. The primary advantage of this type of indication is the ability to determine pump performance without having to compensate for density. The ERFIS computer points for the temperature compensated flow are determined as follows:

Temperature Compensation * FT-605A = FRH0605AC
Temperature Compensation * FT-605B = FRH0605BC

3.8.2 FE-602A (B), RHR Pumps Discharge Flow

These flow orifices, located at the discharge of the RHR pumps, provide a differential pressure to flow indicators FI-602A(B). These instruments then provide a flow signal to flow indicating switches FIS-602A(B) which control the position of the miniflow stops valves, 1RH-31 and 1RH-69. These indicating switches are located on instrument rack A1-R31 and have ranges of 0-1500 gpm each.

3.9 Vibration Instruments

3.9.1 Bently-Nevada 3300 Series Instruments

These instruments are utilized to monitor pump vibration in all modes of operation. The instruments were originally installed to provide a greater band of normal operation, since the manufacturer no longer recommends continuous operation (>3 hours) at <2000 gpm without monitoring pump vibration. With this instrumentation, Ingersoll-Rand feels that reliable operation at >1200 gpm can be achieved. The common instrument rack for the vibration instrumentation is located on RAB 216' elevation. The vertical pumps have a sensor mounted on the X and Y axis with local velocity readings for both instruments on each pump. In addition, there is a local display for displacement (one channel only) for each pump. One channel for each pump is also displayed on ERFIS under point ID VRH0336A and VRH0336B for the 1A-SA and 1B-SB RHR pumps, respectively. A high vibration condition would be annunciated on the RHR ALB for "RHR COMPUTER ALARM".

3.10 Motor Current Instruments

3.10.1 EI-610A (B), RHR Motor Current

These instruments are utilized to monitor motor current in all modes of operation. The indicators have ranges of 0-600 amps and are located on the MCB 1A1 right vertical section.

3.11 Temperature Instruments

3.11.1 TE-604A (B), RHR Discharge Temperature

These thermocouples, located at the discharge of RHR pumps A and B, provide inputs to their respective ERFIS points TRH0604A (TRH0604B). The thermocouples also provide signals to chart recorders located in the MCB Recorder Panel.

3.11.2 TE-606A (B), RHR Heat Exchanger Discharge Temperature

These thermocouples, located at the exit of the RHR heat exchangers (after combining with bypass flow) provide inputs to their respective ERFIS points TRH0606A (TRH0606B). The signal is used directly and indirectly to calculate the temperature compensated flow for ERFIS points FRH0605AC (FRH0605BC). The thermocouples also provide signals to chart recorders located in the MCB Recorder Panel.

4.0 OPERATIONS

CAUTION

Setpoints given in this SD are for reference only. Actual values should be obtained from a controlled setpoint document.

4.1 Plant Heatup

Plant heatup is defined as the operations which bring the reactor from the cold shutdown mode to the hot standby mode (Mode 5 to Mode 3). Normally while at cold shutdown, residual heat from the core is removed by the RHRS. The number of pumps and heat exchangers in service depends upon the decay heat load at the time.

At initiation of plant heatup, the RCS is filled, and the pressurizer heaters are energized. The RHRS will have been operating to remove decay heat and will still be connected to the CVCS via the low pressure letdown line to control RCS pressure.

4.1 Plant Heatup (continued)

Between 250F-350F and with a bubble in the Pressurizer the RHRS is isolated from the RCS, but will remain connected to the CVCS. The RHRS remains in operation by recirculating through the miniflow line until it's loop temperatures fall below 120F. This cooldown of the RHRS is enhanced by closing each of the RHR heat exchanger bypass valves.

Next, the RHR pumps are secured and the RHRS is isolated from the CVCS and realigned for Low Head Safety Injection (LHSI) standby.

4.2 Start Up and Power Operation

During start up and power operation (Modes 1 and 2), the RHRS is not in service, but rather, lined up and ready for low head safety injection. See the Safety Injection System Description (SD-110) for information on this phase of RHRS operation.

4.3 Accident Operation

During a LOCA, the RHRS is called upon to perform its LHSI function. In its LHSI role, the RHRS delivers a high volume of cooling water to the RCS. Initially, the RHR pumps may start and run on miniflow with no RHR heat exchanger cooling from CCW. This may be acceptable for up to 3 hours depending on initial temperature. During the RWST injection phase the RHR system would perform satisfactorily with a total loss of CCW cooling, but longterm operation would be seriously jeopardized if CCW flow could not be reestablished prior to switching the pump suction over to the containment sumps. For more information on this phase of RHRS operation, see the Safety Injection System Description (SD-110), Section 4.3.

4.4 Plant Cooldown

Plant cooldown is defined as the operations which bring the reactor from the hot standby mode to the cold shutdown mode (Mode 3 to Mode 5).

The initial phase of plant cooldown is accomplished by transferring heat from the RCS to the Main Steam System by means of the steam generators.

When the reactor coolant temperature and pressure are reduced below approximately 350F and 360 psig, the second phase of cooldown starts with the RHRS being placed into operation. The RHRS, which is in LHSI standby, is isolated from the RWST and the low head cold leg injection lines while Component Cooling Water flow to the RHR heat exchangers is established. The RHRS is then connected to the CVCS letdown line to equalize the pressures of the RCS and RHRS, and to provide pressure control and cleanup later. Next, the four RHRS inlet valves (1RH-2, 1RH-1, 1RH-40, 1RH-39) are opened to interconnect the RCS and RHRS. These valves are interlocked to open only when the RCS pressure is below 363 psig in order to prevent inadvertent overpressurization of the RHRS.

4.4 Plant Cooldown (continued)

Should overpressurization occur, relief valves (1RH-7, 1RH-45) are provided and are set to relieve at a pressure equivalent to 450 psig in the RCS. The four suction valves are also interlocked to produce individual ALB alarms if the RCS pressure is >425 psig for 15 seconds and one or more of the valves are not shut.

Flow through the RHR heat exchangers should be initiated slowly to minimize thermal shock on components. For this reason, the heat exchanger outlet valves (1RH-30, 1RH-66) are initially placed in the shut position and the bypass valves (1RH-20, 1RH-58) in auto and set to maintain a total RCS return flow of between 2000 gpm and 3750 gpm. With the outlet valves shut, the bypass valves will modulate to full open, bypassing all flow around the heat exchangers. As the outlet valves are gradually opened to meet the appropriate RCS cooldown rate, the bypass valves will modulate toward the closed position (as dictated by instrument flow loops F-605A and F-605B) in order to maintain the set total RCS return flow.

After placing the heat exchanger flow control and bypass valves in their initial lineup, each RHR pump should be started and run with flow to CVCS low pressure letdown until the RHR system temperature approaches RCS. Next the RHR system boron concentration should be sampled and if it is lower than that of the RCS, operation through the CVCS should continue until RCS concentration is reached. As soon as boron concentration in the RHR system is greater than or equal to RCS boron concentration the RHR system will be placed into service by opening one of the isolation valves (1SI-340, 1SI-341) to the cold leg injection lines.

4.5 Outage Support

4.5.1 Refueling

Either of the RHR pumps can be utilized during refueling to pump borated water from the RWST to the refueling cavity. During this operation, the RHRS inlet isolation valves are closed and the isolation valves from the RWST are opened. After the reactor vessel head is lifted, the refueling water is pumped into the reactor vessel through the low head cold leg injection lines and into the refueling cavity through the open reactor vessel. When the refueling water level is established, the RHR inlet isolation valves are opened, the RWST supply valves are shut, and residual heat removal function resumed for refueling operations.

4.5.1 Refueling (continued)

NOTE: Harris typically floods up with High Head Safety Injection (HHSI) to minimize the effect on water clarity. The method described in this system description is functionally how the RHR system could be utilized to perform the task.

Following refueling, the RHR pumps are used to drain the refueling cavity to the top of the reactor vessel. Valve realignments are made which divert the RHR pumps discharge from the RCS to the RWST.

4.5.2 Mid-Loop Operation

Mid-loop operation is defined as that mode of operation that supports RCP seal, Primary Side Steam Generator, and RCS valve work and is applicable whenever RCS vessel level drops 67 inches (top of hot leg) below the vessel flange. During mid-loop operation it is necessary to reduce RHR flow (to prevent cavitation) and supplement vessel level indication with a low pressure standpipe. Since the time from 100% power operation (Mode 1) to mid-loop operation is usually 33 hours to 7 days (decay heat is significantly lower than typical accident scenarios) it is more important to prevent pump cavitation and provide adequate cooling and mixing for decay heat removal than it is to provide full flow cooling. To this end, it is critical to control flow below the maximum analyzed limit (2500 gpm) to prevent air entrainment and subsequent pump cavitation. Flow limiting handwheel kits on valves 1RH-30 and 1RH-66 are set by operations to limit RHR flow. If the flow rate isn't reduced, the resulting vortex will eventually cause air ingestion. Once fluid velocities exceed a critical value, a significant portion of ingested air becomes entrained. At lower fluid velocities, even if a vortex forms, the air may still escape entrainment and return to the surface.

It is anticipated that in the early phases of pump cavitation the first abnormal indication would be degraded or fluctuating pump differential pressure (Section 3.7.1). The other indications of pump cavitation, prior to pump failure, would be fluctuating motor amperage and higher than normal vibration (Sections 3.9.1 and 3.10.1). The ability of the operator to detect pump cavitation by reduced flow is probably minimal due to the range of the instruments and the response of the flow control valve, if in auto, which opens to maintain flow (Sections 3.4.2 and 3.8.1).

The critical ERFIS parameters to monitor during mid-loop operations are:

FRH0605A	(FRH0605B)	- maintain flow between 1200-2500 gpm
FRH0605AC	(FRH0605BC)	- ensure that indication remains constant
PRH5450A	(PRH5450B)	- ensure that indication remains constant, not degrading or fluctuating

4.5.2 Mid-Loop Operation (continued)

VRH0336A (VRH0336B) - ensure that indication remains constant, not increasing
TRH0606A (TRH0606B) - ensure that indication remains constant

The critical MCB parameters to monitor during mid-loop operations are:

FT-605A (FT-605B) - although flow will read falsely high due to lack of temperature compensation it is best indication if ERFIS fails
EI-610A (EI-610B) - ensure that indication remains constant, not fluctuating
LT-403 - ensure that indication remains stable, not decreasing

The margin of safe operation is greatly reduced during mid-loop conditions.

4.6 Special Interlocks and Control Loops

4.6.1 RHR Inlet Isolation Valves 1RH-1, 1RH-2, 1RH-39, 1RH-40

These four valves are interlocked to allow their manual opening only when RCS pressure is less than 363 psig and both of the following conditions exist:

1. Each valve's loop respective RHRS to CSIP suction valve is closed, i.e., 1RH-1 and 1RH-2 are interlocked with 1RH-25.

2. Each valve's loop respective RWST to RHRS isolation valve is closed, i.e., 1RH-39 and 1RH-40 are interlocked with 1SI-323 (Reference the Safety Injection System Description, SD-110, Figure 7.1).

In addition, each valve was originally interlocked to close automatically (if not closed already) when RCS pressure exceeded 700 psig. This concept has been revised through the implementation of autoclosure interlock (ACI) removal to provide the operator with MCB alarms (ALB-4 windows 3-1, 3-2, 3-3, and 3-4) and ACP alarms (A-1 windows 11-1, 11-2, 12-1, and 12-2) that annunciate when adverse conditions exist (>425 psig for 15 seconds). This allows the operator to take appropriate action if conditions warrant it.

4.6.2 RHR Pump Miniflow Valves 1RH-31, 1RH-69

These valves are interlocked to open or close automatically depending upon the RHRS to RCS flow rates of their respective safety train. On a low flow* condition, instrument loops F-602A and F-602B will send a signal to open their associated miniflow valve, while on a high flow* condition the opposite holds true. This interlock provides dead head protection to the RHR pumps by providing a recirculation path when RCS pressure is above pump shutoff. The flow through the valve, in the open position, is limited to approximately 550 gpm by a flow restricting orifice in the piping just downstream of the valve.

NOTE: *Low Flow = 746 gpm at 350F or 713 gpm at 68F
High Flow = 1402 gpm at 350F or 1339 gpm at 68F

4.6.3 RHRS to CSIP Suction Isolation Valves 1RH-25, 1RH-63

The CSIP suction isolation valves are interlocked in such a way as to allow their manual opening only when the following conditions exist:

1. At least one of the two RHRS inlet isolation valves on the same train associated with the CSIP suction isolation valve is closed. For instance, either 1RH-1 or 1RH-2, or both, must be closed in order to open Valve 1RH-25.

2. At least one of the two isolation valves for the same train in each CVCS alternate miniflow line is closed. For instance, either 1CS-745 or 1CS-746, or both, must be closed in order to open 1RH-25 (SD-107 Chemical and Volume Control System).

CAUTION

The Technical Specifications in this SD are for reference only. The intent is to provide general information; therefore, the text presented here is condensed as opposed to a verbatim extraction. Actual specification should be obtained from a controlled Technical Specification document.

4.7 Limiting Conditions for Operation

1. The SHNPP Technical Specification (Section 3.4.1.4.1) requires for Mode 5 (the reactor coolant loops filled), that at least one residual heat removal (RHR) loop shall be OPERABLE and in operation, and either:

   a. One additional RHR loop shall be OPERABLE, or

4.7 Limiting Conditions for Operation (continued)

b. The secondary side water level of at least two steam generators shall be greater than 10% of the narrow range level indicators.

2. The SHNPP Technical Specification (Section 3.4.1.4.2) requires for Mode 5 (reactor coolant loops not filled) that at least two residual heat removal loops shall be OPERABLE and at least one RHR loop shall be in operation or one RHR loop operable and operating and two steam generators narrow range water level >10%.

3. The SHNPP Technical Specification (Section 3.5.2) requires for T_{ave} 350F (Modes 1, 2, and 3) that two independent ECCS subsystems be operable with each subsystem consisting of:

a. One operable charging/safety injection pump,

b. One operable RHR heat exchanger,

c. One operable RHR pump, and

d. An operable flow path capable of taking suction from the refueling water storage tank on a safety injection signal and, upon being manually aligned transferring suction to the containment sump during the recirculation phase of operation.

4. For T_{ave} <350F but T_{ave} >200F (Mode 4), the SHNPP Technical Specification (Section 3.5.3) requires as a minimum, one ECCS subsystem comprised of:

a. One operable charging/safety injection pump,

b. One operable RHR heat exchanger,

c. One operable RHR pump, and

d. An operable flow path capable of taking suction from the refueling water storage tank upon being manually realigned and transferring suction to the containment sump during the recirculation phase of operation.

5. For Mode 6 (irradiated fuel in the vessel, and water level greater than or equal to 23 feet above vessel flange), the SHNPP Technical Specification (Section 3.9.8.1) requires that at least one residual heat removal loop shall be operable and in operation and circulating reactor coolant at a flow rate of greater than or equal to 2500 gpm.

4.7 Limiting Conditions for Operation (continued)

6. For Mode 6 (irradiated fuel in the vessel, and water level less than 23 feet above vessel flange), the SHNPP Technical Specification (Section 3.9.8.2) requires that two residual heat removal loops shall be OPERABLE, and at least one RHR loop shall be in operation and circulating reactor coolant at a flow rate of greater than or equal to 2500 gpm whenever the water level is at or above the reactor vessel flange. However, if the water level is below the reactor flange at least one RHR loop shall be verified in operation and circulating reactor coolant at a flow rate of greater than or equal to 900 gpm.

5.0 INTERFACE SYSTEMS

5.1 Systems Required for Support

5.1.1 Component Cooling Water System (SD-145)

The Component Cooling Water (CCW) System supplies cooling water to the RHR heat exchangers and the RHR pumps mechanical seal coolers. CCW is supplied to each heat exchanger at a nominal flow rate of 5600 gpm and an inlet temperature of approximately 105F. CCW flow to each mechanical seal cooler is 10 gpm.

5.1.2 Safety Injection System (SD-110)

The SIS provides the flow path for RHR return flow to the RCS. SIS piping also delivers refueling water to the RHR pumps suction from the RWST.

5.1.3 RCS Pressurizer Relief Tank (SD-100.03)

The pressurizer relief tank stands ready to accept water from the RHR pumps suction relief valves.

5.1.4 Containment Spray System RWST (SD-112)

The RWST stores the borated water which is used for refueling.

5.2 System-to-System Cross Ties

5.2.1 CVCS (SD-107)

The RHRS is interconnected to the CVCS letdown line in order to control Reactor Coolant System volume and pressure during residual heat removal.

5.2.2 Reactor Coolant Sampling System (SD-101)

The Reactor Coolant Sampling System determines the boron concentration in the RHRS prior to operation to ensure that this concentration is in line with that of the RCS.

6.0 TABLES

Table 6.1 - Electrical Power Supplies for RHRS Motor Operated Valves

Table 6.2 - Electrical Power Supplies for RHRS Air/Solenoid Operated Valves

Table 6.1

Electrical Power Supplies for RHRS Motor Operated Valves

Valve	Normal 480V MCC/Compt #	Alternate 480V MCC/Compt #	Normal 120V Control PP/BKR #	Alternate 120V Control PP/BKR #
1RH-1	1B21-SB-5B	1A21-SA-6A	1B-212-SB/30	1A-212-SA/34
1RH-2	1A21-SA-7B		1A-212-SA/30	
1RH-25	1A35-SA-5A			
1RH-31	1A31-SA-10D			
1RH-39	1B21-SB-11A			
1RH-40	1A21-SA-8A	1B21-SB-8B	1B-212-SB/32	1B-212-SB/34
1RH-63	1B35-SB-8B		1A-212-SA/32	
1RH-69	1B31-SB-1E			

Table 6.2

Electrical Power Supplies for RHRS Air/Solenoid Operated Valves

Valve	120V Power Supply	I/P Power Supply
1RH-16	ISOL CAB 2A (2A2)	
1RH-20	ISOL CAB 2A (2A2)	PIC-C7
1RH-30	ISOL CAB 2A (2A2)	PIC-C5
1RH-54	ISOL CAB 2B (2B2)	
1RH-58	ISOL CAB 2B (2B2)	PIC-C19
1RH-66	ISOL CAB 2B (2B2)	PIC-C19

7.0 FIGURES

7.1 Residual Heat Removal System

7.2 Critical Mid-Loop Elevations

7.3 RHR Pump 1A-SA Performance Curve

7.4 RHR Pump 1B-SB Performance Curve

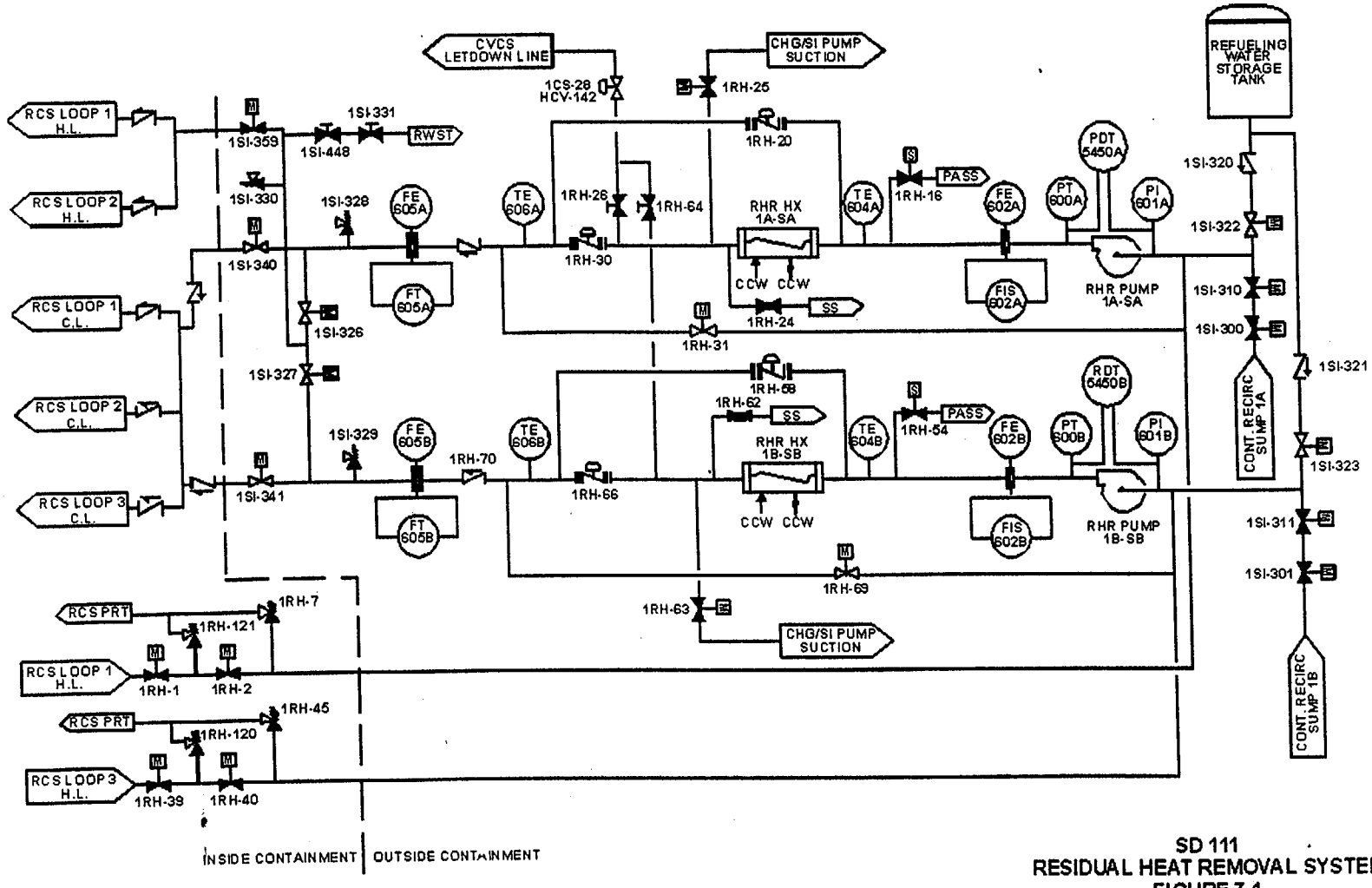

SD 111
RESIDUAL HEAT REMOVAL SYSTEM
FIGURE 7.1

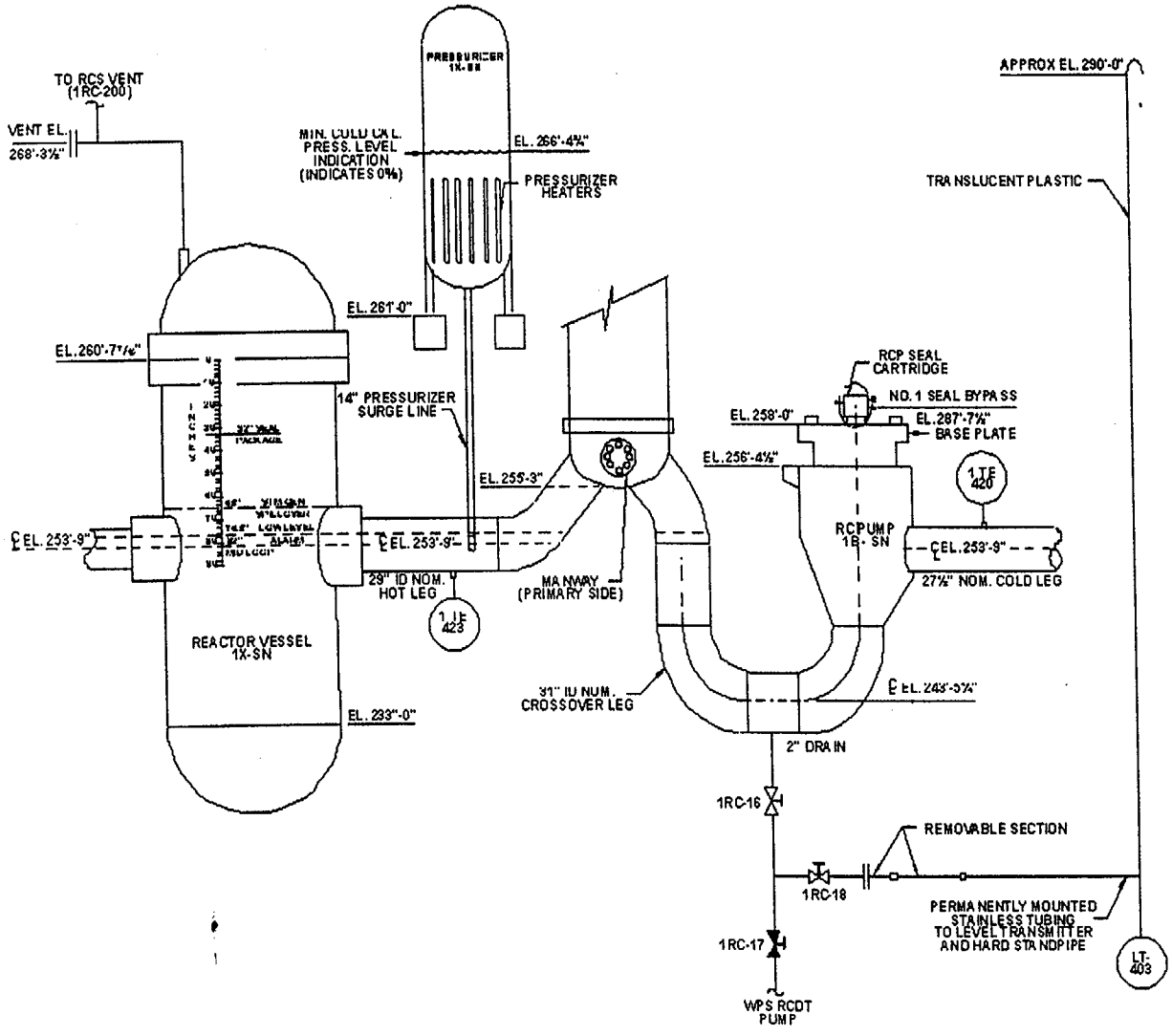

SD-111
CRITICAL MID-LOOP ELEVATIONS
FIGURE 7.2

SD-111 Figure 7.3
RHR Pump 1A-SA Performance Curve

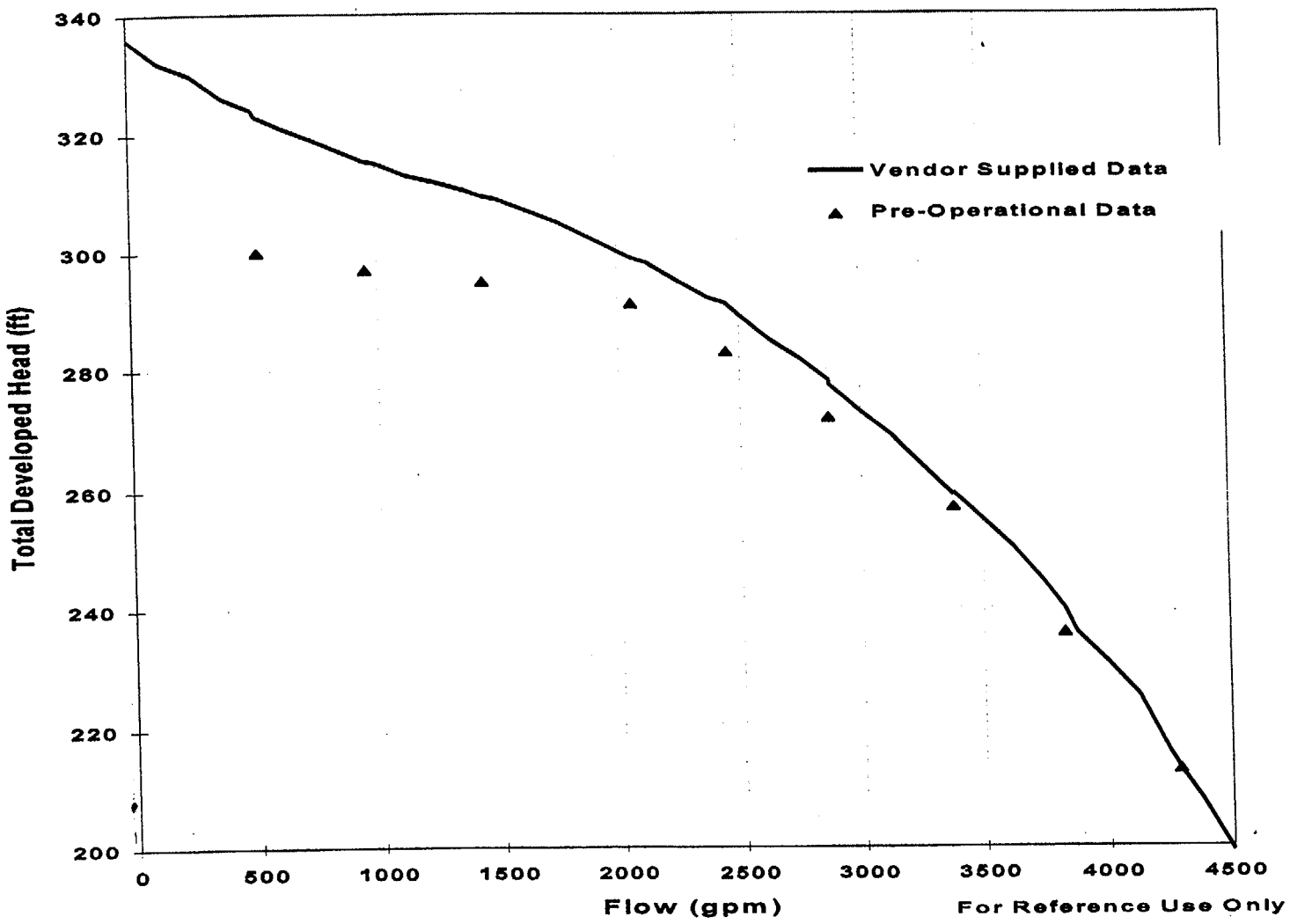

SD-111 Figure 7.4
RHR Pump 1B-SB Performance Curve

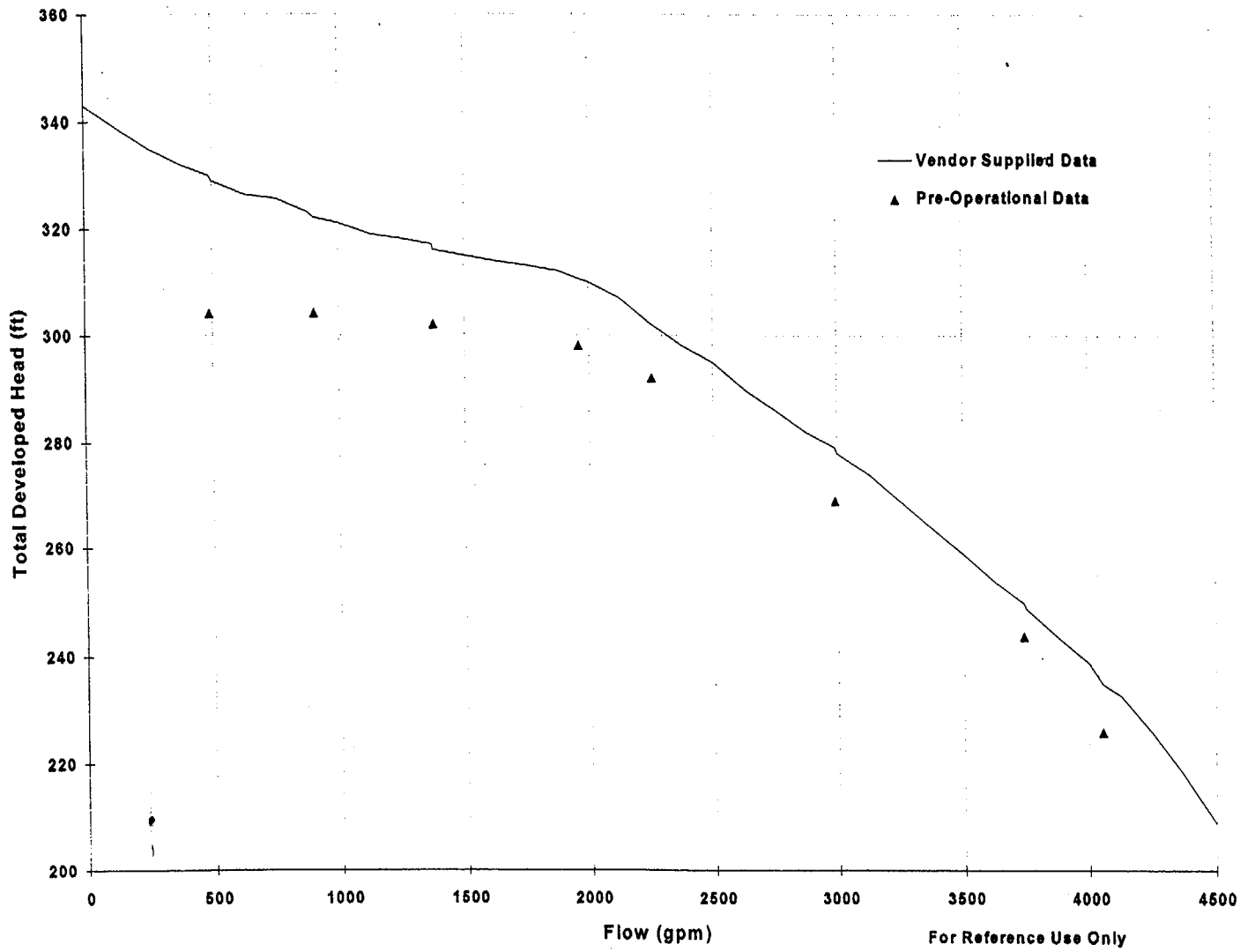

8.0 REFERENCES

8.1 Drawings

8.1.1 Flow Diagrams

Drawing Number	Title
CAR-2165-G-824	Flow Diagram Residual Heat Removal System Unit 1
CPL-2165-S-1324	Simplified Flow Diagram Residual Heat Removal System Unit 1

8.1.2 Control Wiring Diagrams

Drawing Number	Title
CAR-2166-B-401	
Sheet 321	Residual Heat Removal Pump 1A-SA
Sheet 322	Residual Heat Removal Pump 1B-SB
Sheet 323	Residual Heat Removal Pump 1A-SA Miniflow Valve 2RH-F511SA-1, (1RH-31)
Sheet 324	Residual Heat Removal Pump 1B-SB Miniflow Valve 2RH-F510SB-1, (1RH-69)
Sheet 325	RHRS Inlet Isolation Valve 1RH-V503SA-1, (1RH-2)
Sheet 326	RHRS Inlet Isolation Valve 1RH-V501SB-1, (1RH-40)
Sheet 327	RHRS Inlet Isolation Valve 1RH-V502SA-1, (1RH-1)
Sheet 328	RHRS Inlet Isolation Valve 1RH-V500SB-1 (1RH-39)
Sheet 329	RHRS to CVCS Charging Pump Suction Valve 2RH-V507SA-1, (1RH-25)
Sheet 330	RHRS to CVCS Charging Pump Suction Valve 2RH-V506SB-1, (1RH-63)
Sheet 331	RHRS Heat Exchanger Outlet Flow Control Valves 2RH-B501SA-1, 2RH-B500SB-1, (1RH-30, 1RH-66)
Sheet 332	RHRS Heat Exchanger Bypass Control Valves 2RH-F500SA-1, 2RH-F501SB-1, (1RH-20, 1RH-58)

8.1.2 Control Wiring Diagrams (continued)

Drawing Number	Title
CAR-2166-B-401	
Sheet 333	Residual Heat Exchanger Bypass Flow Control Instrumentation
Sheet 334	RHR Pumps and Heat Exchanger Outlet Press & Temp Instrumentation
Sheet 335	RHR Pumps 1A-SA & 1B-SB Annunciation
Sheet 336	RHR Isolation Valve 1RH-V502SB-1 (1RH-1) Power Supply From An "SA" Source
Sheet 337	RHR Isolation Valve 1RH-V501SA-1 (1RH-40) Power Supply From An "SB" Source
Sheet 338	Residual Heat Removal Pump Motors 1A-SA & 1B-SB Computer Inputs

8.1.3 General Plans

Drawing Number	Title
CAR-2165-G-019	General Arrangement Reactor Auxiliary Building Plan El 190.0' and 216.0' Unit 1
CAR-2165-G-016	General Arrangement Reactor Auxiliary Building Plan El 236.0' Unit 1
CAR-2165-G-017	General Arrangement Reactor Auxiliary Building Plan El 261.0' Unit 1
CAR-2165-G-151	RHR & Safety Injection Piping Reactor Auxiliary Building Plan El 190.00' & 216.00'
CAR-2165-G-152	RHR & Safety Injection Piping Reactor Auxiliary Building Plan El 236.00'
CAR-2165-G-153	RHR & Safety Injection Piping Reactor Auxiliary Building Partial Plans & Sections
CAR-2165-G-154	RHR & Safety Injection Piping Containment Building Plan Sheet 1
CAR-2165-G-155	RHR & Safety Injection Piping Containment Building Plan Sheet 2
CAR-2165-G-156	RHR & Safety Injection Piping Containment Building Partial Plans & Sections

8.1.4 Manufacturers Drawings (EMDRAC)

Ebasco Dwg. #	Functional Title
2030	RHR Pump Outline 3 Pages
2960	RHR Pump Motor Outline (RAB)
2038	Residual Hx 3 Shts.

8.2 Technical Manuals

IJV Residual Heat Removal Motor (Westinghouse)

BGK Auxiliary Exchangers (Westinghouse)

BJH Residual Heat Removal Pump (Ingersoll-Rand)

SD-CQL-283 Westinghouse Residual Heat Removal System Description

8.3 Other

SHNPP Final Safety Analysis Report, Section 5.4.7

SHNPP Technical Specifications, Sections 3/4.4.1.4.1, 3/4.4.1.4.2, 3/4.5.2, 3/4.5.3, 3/4.9.8.1, 3/4.9.8.2

Design Basis Document DBD-105, Residual Heat Removal System

SD-100.03 Pressurizer and Controls
SD-101 Primary Sampling and Post Accident Sampling Systems
SD-107 Chemical and Volume Control System
SD-110 Safety Injection System
SD-112 Containment Spray System
SD-145 Component Cooling Water System

Summary of Revision

Page 5 Changed maximum temperature for RHR pump seal.

CAROLINA POWER & LIGHT COMPANY

SHEARON HARRIS NUCLEAR POWER PLANT

PLANT OPERATING MANUAL

VOLUME 6

PART 2

PROCEDURE TYPE: System Description (SD)

NUMBER: SD-139

TITLE: Service Water System

REVISION 10

RECEIVED
NOV 1 3 1998
HNP
DOCUMENT CONTROL

4/9

Table of Contents

Section		Page
1.0	SYSTEM PURPOSE	4
2.0	SYSTEM FUNCTION	4
2.1	Emergency Service Water (ESW) System	4
2.1.1	ESW Main Flow Path	4
2.1.2	ESW Interconnections	5
2.1.3	ESW Branch Flow Paths	6
2.1.3.1	CVCS Chiller	6
2.1.3.2	Auxiliary Feed Pump	6
2.1.3.3	Charging Pump Oil Coolers	6
2.1.3.4	Component Cooling Water Heat Exchangers, Diesel Generator Coolers, RAB HVAC Chiller	6
2.1.3.5	Containment Fan Cooler Units	6
2.1.3.6	Post Accident Sampling System (PASS)	6
2.1.3.7	Plant Air Compressors	7
2.2	Normal Service Water (NSW) System	7
2.2.1	NSW Main Flow Path	7
2.2.2	NSW Branch Flow Paths	8
2.2.2.1	Turbine Building	8
2.2.2.2	Waste Processing Building	8
2.2.2.3	Containment Fan Coil Units	9
2.2.3	NSW Interconnections	9
3.0	COMPONENTS	9
3.1	Emergency Service Water System	9
3.1.1	Emergency Service Water Pumps	9
3.1.2	Emergency Service Water Self-Cleaning Strainers	9
3.1.3	Service Water Booster Pumps	10
3.1.4	ESW System Valves	10
3.2	Normal Service Water System	10
3.2.1	Normal Service Water Pumps	10
3.2.2	Normal Service Water Self-Cleaning Strainer	10
4.0	OPERATIONS	11
4.1	Normal Operation	11
4.1.1	Normal Service Water System	11
4.1.2	Emergency Service Water System	11
4.2	Start-Up and Cooldown	11
4.2.1	Normal Service Water System	11
4.2.2	Emergency Service Water System	11
4.3	Abnormal Operations	12
4.3.1	Normal Service Water System	12
4.3.2	Emergency Service Water System	12
4.4	Technical Specifications	12
5.0	INTERFACE SYSTEMS	12
5.1	Systems Required for Support	12
5.1.1	Emergency Service Water System	12
5.1.2	Normal Service Water System	13
5.2	System-to-System Crossties	13
6.0	TABLES	13
6.1	Typical Service Water Loads by Building	13

Table of Contents (continued)

Section			Page
7.0	FIGURES		15
	7.1	Emergency Service Water System, Train A	16
	7.2	Emergency Service Water System, Train B	17
	7.3	Normal Service Water System	18
	7.4	Service Water System Yard Piping	19
	7.5	NSW Bearing Lubrication and Motor Cooling	20
	7.6	ESW Pump Seal/Bearing Water	21
8.0	REFERENCES		22
	8.1	Drawings	22
		8.1.1 System Drawings	22
		8.1.2 Control Wiring Diagrams	23
		8.1.3 SW System Component Instr. Schematics and Logic Diagrams	27
		8.1.4 Manufacturer's Drawing	27
	8.2	Specifications	28
	8.3	Technical Manuals	29
	8.4	Other References	30

1.0 SYSTEM PURPOSE

The Service Water System is made up of two separate systems, the Emergency Service Water System (ESWS) and the Normal Service Water System (NSWS). The ESWS circulates water from the ultimate heat sink (UHS) through plant components required for safe shutdown of the reactor following an accident, and returns the water to the UHS. The ESWS performs its cooling function following a loss-of-coolant accident (LOCA) or loss of off-site power, automatically and without operator action. Redundancy built into the system provides protection for a single active or single passive failure.

The ESWS also provides an emergency source of water for the Auxiliary Feedwater System (AFWS), Essential Services Chilled Water System (ESCWS), and the Fire Protection System (FPS).

The Normal Service Water System circulates water from the Cooling Tower (CT) and Cooling Tower Makeup System through plant auxiliary components and back to the Cooling Tower. The NSWS serves no safety function, but does provide cooling water to the ESW headers during normal operation. NSW temperature is influenced by lake water temperature due to continuous Cooling Tower Makeup. The winter average temperature is in the sixties and the summer is in the nineties.

2.0 SYSTEM FUNCTION

2.1 Emergency Service Water (ESW) System

The Emergency Service Water System consists of two intake structures (one on the auxiliary reservoir and one on the main reservoir); two emergency service water pumps, valves, and strainers; two emergency service water booster pumps; two 30-inch diameter safety-related supply headers (A&B) with all associated branches and heat exchangers; two safety-related return headers; and the discharge structure for the return of water to the auxiliary reservoir. These components are arranged into two completely independent redundant trains (A&B) each capable of supplying sufficient cooling water for plant safety. Figures 7.1 and 7.2 provide simplified flow diagrams of the Emergency Service Water System and Figure 7.4 shows the general location of ESW yard piping.

2.1.1 ESW Main Flow Path

The water source to the Emergency Service Water (ESW) System originates from the auxiliary reservoir (preferred source) or the main reservoir (backup source). The preferred supply flows from the auxiliary reservoir through the ESW intake canal to the ESW intake screening structure. As the water enters the structure, the flow is divided by the structure into separate bays. In each bay, the water flows through a trash rack and a traveling screen (Reference SD-140) to remove debris greater than 7/16 inch, and through a normally-open, manually-operated butterfly valve. The water exits the bay through a 30-inch diameter coated (inside is epoxy paint, outside is coal tar) steel pipe and gravity flows to the respective ESW pump bay in the ESW and Cooling Tower Make-Up (CTMU) Intake Structure. The ESW backup source of water flows from the main reservoir via the ESW and CTMU intake canal to the ESW and CTMU Intake Structure where the flow is divided by the structure into bays. Within each intake bay, the water flows through a trash rack and a finer traveling screen as in the ESW intake screening structure. The main reservoir

2.1.1 ESW Main Flow Path (continued)

water is stopped from flowing into the ESW pump suction bay by a normally-shut, manually-operated rectangular butterfly valve. The ESW pumps discharge through a check valve and a self-cleaning strainer that removes debris larger than 1/16 inch. During normal plant operation, the Normal Service Water System supplies cooling water to heat loads on the Emergency Service Water Header. The ESW pump discharge check valve prevents NSW System backflow through the pump to the auxiliary reservoir. From the strainer, the water exits the ESW and CTMU Intake Structure through underground 30-inch diameter coated steel pipes (one pipe per safety train). The two supply headers enter the tank building and drop down into the elevation 216' pipe tunnel that runs the entire length of the reactor auxiliary building. Branch lines from supply header A provide cooling water to all safety train A components. Similarly, branch lines from supply header B provide cooling water to all safety train B components. When the ESW System is required [safety injection signal occurred, loss of off-site power, or cooling water inlet (auxiliary reservoir) temperature <35°], both headers are supplied with water. Containment cooling and auxiliary reservoir makeup requirements to avoid Tech Spec LCOs may result in running both ESW pumps/trains during the summer months.

The heated water returns by branch lines to the train A or B return header (30-inch diameter) located in the elevation 216' pipe tunnel. The headers exit the plant area via motor-operated butterfly valves (1SW-270 and 1SW-271) and are routed underground to the ESW discharge structure. In addition to supplying cooling water, the ESW System provides a source of water to the Screen Wash System (SD-140) and is a backup source of water to the Essential Chilled Water System, Auxiliary Feedwater System, and to the Fire Protection System. Supply water to the Auxiliary Feedwater System can be controlled from the Main Control Room.

The ESW System alternate suction path from the main reservoir is the result of NRC Regulatory Guide 1.27 requirements. Two 8' x 10', manually-operated butterfly valves are located in the seismic Category 1 wall separating the main reservoir intake from the Emergency Service Water pump chamber. In order to shift suction, the 30-inch, manually-operated butterfly valves (1SW-1 and 1SW-2) in the suction lines from the Auxiliary Reservoir and the 8' x 10' valves (1SW-3 and 1SW-4) from the Main Reservoir are repositioned. With both suction valves in an ESW train open (1SW-1, 1SW-3 for "A" Train; 1SW-2, 1SW-4 for "B" Train), water will flow from the Auxiliary Reservoir to the Main Reservoir due to the difference in the reservoir levels.

2.1.2 ESW Interconnections

The ESW System's supply headers cannot be cross-connected. For example, ESW Pump 1A-SA cannot supply water to the B train supply header and vice versa. Some components can be aligned to either header since, during normal operation, only one emergency service header may be in service and is supplied by the Normal Service Water System. Service water supply to the turbine-driven auxiliary feedwater pump is normally isolated, but may be aligned to either header in the event of an emergency. The charging pump oil coolers have their supply and return isolation valves aligned such that each pump is supplied by only one service water train, A or B, depending on the respective pump's electrical lineup. Valve alignment for the C charging pump depends on its electrical lineup.

2.1.3 ESW Branch Flow Paths

2.1.3.1 CVCS Chiller

The branch to the CVCS chiller contains air-operated valves that shut automatically on a Safety Injection (SI) signal. Thus, during an emergency this flow path would be isolated. During normal operation, the CVCS chiller is aligned to only one train at a time.

2.1.3.2 Auxiliary Feed Pump

The turbine-driven auxiliary feed pump branch contains normally-shut, motor-operated valves. In the event Emergency Service Water is needed for auxiliary feedwater, the control room operator would select which ESW header to use, open the appropriate supply valves, and have an auxiliary operator shut the associated loop seal line isolation valve. The valves from both headers would not be opened at the same time since a piping failure on one service water train could affect the flow in the other train.

2.1.3.3 Charging Pump Oil Coolers

The charging pump oil cooler branches contain only manual isolation valves. These lines are sized (1½ inch diameter) such that a failure of these lines would not materially affect the service water flows to other components.

2.1.3.4 Component Cooling Water Heat Exchangers, Diesel Generator Coolers, RAB HVAC Chiller

The branch flow path from the A supply header to the component cooling heat exchanger, diesel generator jacket water coolers, and auxiliary building HVAC chiller condensers is independent of the B service water header. There are manual butterfly isolation valves with this equipment.

2.1.3.5 Containment Fan Cooler Units

The branch flow path to the containment fan cooler units contains the service water booster pump, which starts on an emergency (SI) signal. During normal operation, service water flow bypasses the idle booster pump, enters containment through the motor-operated butterfly isolation valves, flows through the fan cooler coils and back to the ESW return header through the containment isolation valves and a flow control orifice. This flow control orifice has an air-operated, normally-open bypass valve in parallel such that if the booster pump is off, the flow restriction is minimal. However, when the booster pump starts, this valve shuts, forcing all the fan cooler return flow through the orifice. The purpose of the booster pump and orifice is to ensure that, during a design basis Loss of Coolant Accident, the service water pressure inside containment is higher than containment pressure. This ensures any leakage will be from service water into containment and will prevent the release of containment radioactivity via the ESW System.

2.1.3.6 Post Accident Sampling System (PASS)

Branch flow from the A and B supply headers is supplied to the PASS. Manual isolation valves are provided for the supply and return lines. Only one train of supply and return valves (A or B train) may be open at any time to prevent cross-connection of safety trains following an accident.

2.1.3.7 Plant Air Compressors

Emergency Service Water can be aligned to supply cooling water to all five plant air compressors. Either train can be aligned to supply the air compressors with cooling water. When in Modes 1 through 4, the ESW header supplying the air compressors is declared inoperable. At no time should both trains be aligned to the air compressors as this would cross connect the ESW headers.

2.2 Normal Service Water (NSW) System

The Normal Service Water System supplies cooling water from the cooling tower basin and Cooling Tower Makeup System to various plant components and systems. The Normal Service Water System consists of the intake structure, the distribution header, two 100 percent capacity pumps, self-cleaning strainers, motor-operated valves, and the supply and return headers to/from the Waste Processing Building, Turbine Building, Reactor Auxiliary Building, and the Containment Building. Figure 7.3 provides a flow diagram of the NSW system and identifies the components supplied by NSW.

2.2.1 NSW Main Flow Path

Water from the cooling tower basin is supplied to the NSW intake chamber by a 6-foot diameter underground concrete conduit. The NSW intake chamber is located north of the cooling tower. Additional water is supplied to this conduit from a 3-foot diameter Cooling Tower Makeup Line. One of the two 100 percent capacity NSW pumps (design flow 50,000 gpm) takes suction on the water in the chamber and pumps it through a motor-operated discharge valve and into a 48-inch diameter steel pipe which contains a self-cleaning strainer. This strainer is designed to filter debris down to 1/16-inch diameter and contains isolation and bypass valves to allow maintenance without interruption of NSW flow.

From the strainer, the NSW flows through approximately 1200 feet of 4-foot diameter steel pipe to the power block area of the plant where branch headers go to the Turbine Building, Waste Processing Building, and the Reactor Auxiliary Building. The NSW supply header in the Reactor Auxiliary Building divides to supply the containment non-safety ventilation fan coil units and to ESW safety train A and/or B supply header via a motor-operated isolation valve to provide cooling water to the safety-related components in the Containment Building (i.e., containment fan coolers) and in the Reactor Auxiliary Building. The NSW System supply to ESW Safety train A and/or B is selectable from the main control board in the control room.

During normal operation, the NSW return flows from the branch headers (including the ESW header), with the exception of the Waste Processing Building, are discharged into the circulating water return lines in the Turbine Building north of the main condenser. The return flow from the Waste Processing Building joins the circulating water lines in the yard between the Turbine Building and the Cooling Tower.

Upon the start of an ESW Pump, the NSW supply to the ESW header (that will be supplied by the running ESW Pump) is automatically isolated. In addition, the return flow from the ESW header is automatically realigned to discharge to the Auxiliary Reservoir instead of the Cooling Tower.

The general location of NSW System piping between the plant buildings and the cooling tower is shown in Figure 7.4.

2.2.2 NSW Branch Flow Paths

The NSW supply header splits into four major headers, the ESW supply header A or B, the Turbine Building supply header, the Waste Processing supply header, and the Containment Fan Coil units supply.

The branch flows from the ESW headers are as described in Section 2.1.3.

2.2.2.1 Turbine Building

The Turbine Building service water header is a 24-inch branch off the main 48-inch normal service water supply line. The branch flow paths to the larger Turbine Building heat exchangers contain air-operated temperature control valves that throttle the service water to maintain the shell side fluid at the proper temperature. These loads are as follows:

1. Turbine Lube Oil Coolers
2. Turbine Generator Hydrogen Coolers
3. Hydrogen Seal Oil Unit
4. Air Compressors (No air-operated TCV)
5. Generator Exciter Cooler
6. Turbine DEH Unit Coolers

There are also a number of small heat exchangers in the Turbine Building which have manual throttle/isolation valves to control the service water flow. These loads are as follows:

1. Condensate Pump Motor Oil Coolers
2. Condensate Booster Pump and Hydraulic Coupling Oil Coolers
3. Heater Drain Pump Motor Oil Coolers
4. Main Feed Pump Oil Coolers
5. Main Generator Bus Duct Cooling Unit
6. Condenser Vacuum Pump Heat Exchangers

The Turbine Building service water header also supplies makeup water to the condensate polisher area evaporative air cooler.

2.2.2.2 Waste Processing Building

The Waste Processing Building service water header is a 24-inch branch off of the main NSW supply line. The major flow demand on this header is the Waste Processing Building closed Cooling Water heat exchanger. There is no automatic temperature control of the shell side fluid of this heat exchanger. Manual butterfly valves are provided for service water throttling/isolation.

The Waste Processing Building HVAC chiller condenser is also supplied with service water cooling from this header. The service water components and controls for this equipment are described in the Waste Processing Chilled Water System Description (SD-146). The Waste Processing Building service water header also supplies makeup water to the Waste Processing Building evaporative air coolers.

2.2.2.3 Containment Fan Coil Units

The branch flows to the Containment Fan coil units contain Containment isolation valves in both the supply and return lines. These valves are remote, air-operated, butterfly valves that automatically shut on a Phase A containment isolation signal.

2.2.3 NSW Interconnections

The NSW System provides a backup source of water to the ESW headers, as described in Section 2.1.1.

3.0 COMPONENTS

3.1 Emergency Service Water System

3.1.1 Emergency Service Water Pumps

The 1A-SA and 1B-SB Emergency Service Water Pumps are Ingersol-Dresser Model 35LKX-2. They are vertical-turbine, mixed-flow pumps with a closed-impeller arrangement involving two stages with single suction. Designed capacity is 20,000 gpm at 225 ft head; runout is 25,000 gpm at 140 ft; minimum recirculation is 7500 gpm at 300 ft; shut off head is equal to 360 ft. These pumps are nuclear safety class 3 and the motors are class IE. The motors are General Electric 6.9 KV, 1300 horsepower, 885 RPM induction type. Pumps 1A-SA and 1B-SB are powered from 6.9 KV Emergency Bus 1A-SA CUB 9 and 1B-SB CUB 1, respectively. The two pumps are located in the Emerency Service Water and Cooling Tower Makeup Intake Structure.

An unusual feature of these pumps is their setting length. The large difference in reservoir elevation [252' mean sea level (MSL) for the auxiliary reservoir and 220' MSL for the main reservoir] results in a total length from the suction bell to mounting flange of over 70 feet. Minimum submergence of 6 ft over the suction bell is required. The pump bearings are water-lubricated by the pumped fluid. A portion of the ESW screen wash flow is diverted through a cyclone separator to remove particles 100 microns and larger, and then supplied to the pump bearing and seal water system. Refer to OST 1214 & 1215 and calculation SW-0051, Attachment 5, for pump performance data.

3.1.2 Emergency Service Water Self-Cleaning Strainers

The two automatic self-cleaning strainers are nuclear safety class 3 and are manufactured by R. P. Adams Company. They are designed to continuously remove particles 1/16 inch in diameter or larger at a flow rate of 21,500 gpm at 150 psig at 140°F with a 5 psi differential. They are located inside the Emergency Service Water and Cooling Tower Makeup Intake Structure. Each unit is equipped with a controlled automatic strainer backwashing system capable of providing continuous or intermittent backwash of 650 gpm at 20 psid without interruption of the main flow stream. The 1A-SA and 1B-SB strainers are powered from 480V MCC-1A325A COMPT.1E and 480V MCC-1B32SB COMPT.1E, respectively.

3.1.3 Service Water Booster Pumps

The Service Water Booster Pumps are Goulds Model 3405 12X14-12, single-stage, horizontal split case, double-suction, centrifugal pumps with a closed impeller. Their design capacity is 4,250 gpm at 120 ft. head; minimum recirculation is 750 gpm at 150 ft. head; runout is 6500 gpm at 74 ft. head with a shutoff head of 170 ft; and design pressure is 225 psig. The pump is nuclear safety class 3. Their motors, made by Siemens-Allis, are each rated at 480 VAC, 200 horsepower, 1770 RPM, and are safety class IE. They are located on the 236' elevation of the Reactor Auxiliary Building in the vicinity of the component cooling heat exchangers. No special lubrication or cooling systems are required for the pump or motor bearings. The booster pumps 1A-SA and 1B-SB are powered from 480V Emergency Busses 1A2-SA and 1B2-SB, respectively. Refer to OST-1214 & 1215 and calculation SW-0051, Attachment 5, for pump performance data.

3.1.4 ESW System Valves

The majority of 4-inch and larger valves installed in ESW piping are carbon steel, lug-body butterfly valves, manufactured by Jamesbury Valve Company. However, several of the most critical valves have been replaced with stainless steel wafer type valves manufactured by Anchor/Darling. For 2-inch and smaller diameter ESW piping, the majority of the valves are manufactured by Yarway or Rockwell International; these valves are predominantly globe valves.

3.2 Normal Service Water System

3.2.1 Normal Service Water Pumps

The Normal Service Water Pumps are Peerless Model 48HH and are not nuclear safety related. They are two-stage, vertical-turbine, mixed-flow pumps with closed impellers. The design capacity is 50,000 gpm at 203 ft. head; runout capacity is 72,000 gpm at 72 ft. head; the minimum continuous flowrate is 17,500 gpm (reference 8.4.1); and the minimum submergence is 8'3". The motors are induction motors made by Siemens-Allis and are rated at 6.6 KV, 3,000 horsepower, and 712 RPM. Two 100 percent capacity pumps are located on the Normal Service Water Intake Structure next to the Cooling Tower.

3.2.2 Normal Service Water Self-Cleaning Strainer

The NSW self-cleaning strainer is a Zurn Industries Model 596. Its design flow rate is 50,000 gpm at 150 psig at a temperature of 140°F. The maximum expected pressure differential across the 1/16-inch screen (clean)is 2.5 psid. The strainer is located outdoors on the NSW intake structure. The strainer is equipped with a controlled automatic strainer backwashing system capable of providing backwash of 1630 gpm without interrupting the main flow stream. The strainer is backwashed on a timed cycle. The strainer will also be automatically backwashed between the timed backwashes if a high differential pressure across the strainer is experienced. The backwash motor, made by General Electric, is rated at 480VAC, 2 horsepower, 1725 RPM, and has a final backwash shaft speed of 3.83 RPM.

Corrosion protection for the strainer internals is provided by sacrificial anodes. These anodes have been known to break loose and cause a clanking noise in the vicinity of the strainer.

4.0 OPERATIONS

4.1 Normal Operation

4.1.1 Normal Service Water System

During normal plant operations the Normal Service Water System has one pump supplying the Normal Service Water System and the Emergency Service Water System. This pump supplies the Turbine Building, Waste Processing Building, Containment Fan Coil units, and Emergency Service Water System headers.

4.1.2 Emergency Service Water System

During normal plant operations the Emergency Service Water System is in a standby mode except as described in Section 2.1.1. The pumps are not running, but the system headers and loads are lined up to be supplied by the NSWS. Typically, both ESW headers are in service to minimize stagnant conditions and provide chemical treatment for biological control. The supply and return valves for the header(s) in service are open. If one ESW header is placed in standby, the supply valve for the idle header is open and the return valve is shut in order to keep the idle header pressurized.

4.2 Start-Up and Cooldown

4.2.1 Normal Service Water System

Most start-ups and cooldowns can be accomplished with the Normal Service Water System supplying both Normal Service Water System and Emergency Service Water System loads. However, if a rapid cooldown is desired (primary system), the second Normal Service Water System Pump and the second safety-related service water header must be placed in service. This is because two component cooling water heat exchangers are needed and because flows through the other normal service water loads are assumed to be close to the respective design flows.

Dry start-up of the NSW system requires special valve line-ups to avoid water-hammer damage. Current operating procedures require the isolation of the WPB supply header, turbine generator exciter coolers, and turbine generator hydrogen coolers. An automatic priming mode also helps prevent water-hammer. This is initiated by taking the pump start switch to START and quickly releasing. In this mode, the NSW pump discharge valve opens 10 percent for seven minutes. After seven minutes the valve fully opens.

If one pump is already running at normal flow and pressure and the second pump is to be started, the automatic priming mode may be bypassed by holding the pump start switch in the START position. In this mode the discharge valve can be taken full open, bypassing the seven-minute hold point.

Each NSW pump has "anti-pump" protection in the starting logic. Once the control switch is taken to START (either in priming or in priming-bypass mode), the sequence to close the pump breaker begins and cannot be restarted for at least 15 seconds. Any attempt to restart the pump within the 15-second period is blocked. This logic is intended to prevent multiple, rapid closures of the pump breaker, such as might occur with a breaker fault.

4.2.2 Emergency Service Water System

During start-ups and cooldowns the Emergency Service Water System remains in a standby condition with Normal Service Water supplying the loads of the Emergency Service Water headers. If a rapid cooldown of the primary systems is desired, both A and B headers are placed in service to supply the two component cooling water heat exchangers.

4.3 Abnormal Operations

4.3.1 Normal Service Water System

Whenever service water temperature exceeds 90°F, all four containment fan coolers are placed in service. The second Normal Service Water Pump may be needed if the other loads are drawing close to design flows. The second Emergency Service Water Header must be placed in service due to the containment fan coolers. Loss of normal service water will result in plant shutdown due to loss of cooling to essential secondary components.

4.3.2 Emergency Service Water System

This safety-related system is required to be operable to support cooling requirements following an accident (LOCA, loss of off-site power). If this should happen the Emergency Service Water System will isolate from the Normal Service Water System, the pumps start automatically, and valves cycle to their safeguards positions.

The Technical Specification Minimum Main Reservoir level is 215 feet. This limit is to insure that all components are capable of their design basis heat removal capacities.

If the Emergency Service Water intake water temperature falls below 35°F, the Emergency Service Water pumps should be started to minimize the potential for icing the Emergency Service Water intake.

The Emergency Service Water pumps and booster pumps are operated on a periodic basis to ensure proper flows in accordance with the Technical Specifications surveillance requirements.

It should be noted that nearly all of the ESW heat loads do not contain automatic throttling valves for temperature control of the shell side fluid. This situation makes it necessary to conduct a flow balance to determine the position of the manual heat exchanger outlet valves, such that proper service water flows are maintained in the system.

4.4 Technical Specifications

At least two independent Emergency Service Water loops shall be OPERABLE.

5.0 INTERFACE SYSTEMS

5.1 Systems Required for Support

5.1.1 Emergency Service Water System

The following systems are required for support of the Emergency Service Water System:

1. Instrument Air for valve operation
2. Emergency Service Water Screen Wash System and Emergency Service Water Traveling Screens
3. Reservoirs, Intake Canals and Structures, Discharge Canals and Structures
4. Various electrical systems

5.1.2 Normal Service Water System

The following systems are required for support of the Normal Service Water System:

1. Instrument Air for valve operation
2. Potable Water for pump bearing and seal flushing
3. Circulating Water for return of the service water to the cooling towers
4. Cooling Tower and Cooling Tower Makeup System
5. Various electrical circuits and panels

5.2 System-to-System Crossties

The ESW System is cross-connected with the NSW System, the Auxiliary Feedwater System, and the Fire Protection System.

6.0 TABLES

6.1 Typical Service Water Loads by Building

Table 6.1

Typical Service Water Loads by Building

Normal Service Water

WASTE PROCESSING BUILDING HEADER	LOAD (gpm)
Waste Processing Bldg. Component Cooling Water Heat Exchangers	10,000
Waste Processing Bldg. Chiller Condenser	5,200
Waste Processing Bldg. Evaporative Air Cooler	
CONTAINMENT / RAB	
Containment Air Handling Units (AH 37, 38, 39)	2,400
Makeup to RAB Evaporator Air Coolers (Auto Isolation on SIAS)	10
TURBINE BUILDING HEADER	
Turbine Building Header	11,032
Turbine Lube Oil Cooler	3,500
Generator Hydrogen Cooler	4,500
Hydrogen Seal Oil Coolers	360
Condensate Booster Pump Hydraulic Coupling and Motor Coolers	600
Condensate Vacuum Pump Coolers	354
Main Generator Leads Cooler (Isolated Bus Duct Coolers)	230
Main Feed Pump Oil Coolers	30
Condensate Pump Motor Coolers	34
Turbine Bldg. Evaporator Air Coolers	20
Turbine Electrohydraulic Control System Coolers	20
Air Compressors	43
Heater Drain Pump Motors	27
Generator Exciter Coolers	300
Radiation Monitor Coolers	60

Emergency Service Water*	LOAD PER TRAIN (gpm)
Boron Thermal Regeneration System Chillers NNS	414
Air Compressors and Aftercoolers (Normally from NSWS Emergency can be ESWS)	43
ESCWS Chiller Condenser	2,500
Containment Air Coolers Air Handling Units	3,000
Component Cooling Water System Heat Exchanger	11,000
Diesel Generator Jacket Water Cooler	1,000
Charging and Safety Injection Pumps Oil Cooler	60
Emergency Makeup to Motor-Driven AFW Pump	900
Emergency Makeup to Turbine-Driven AFW Pump	900
Emergency Service Unit Intake Screen Wash Pump	270
ESWS Strainer Backwash	650
PASS Cooler	**87

* Values are approximate based on system flow balance & design data. Reference calcs SW-0078 & SW-0080 for min. flow limits.

** From DBD-139.

7.0 FIGURES

7.1 Emergency Service Water System, Train A

7.2 Emergency Service Water System, Train B

7.3 Normal Service Water System

7.4 Service Water System Yard Piping

7.5 NSW Bearing Lubrication and Motor Cooling

7.6 ESW Pump Seal/Bearing Water

Figure 7.1
Emergency Service Water System, Train A

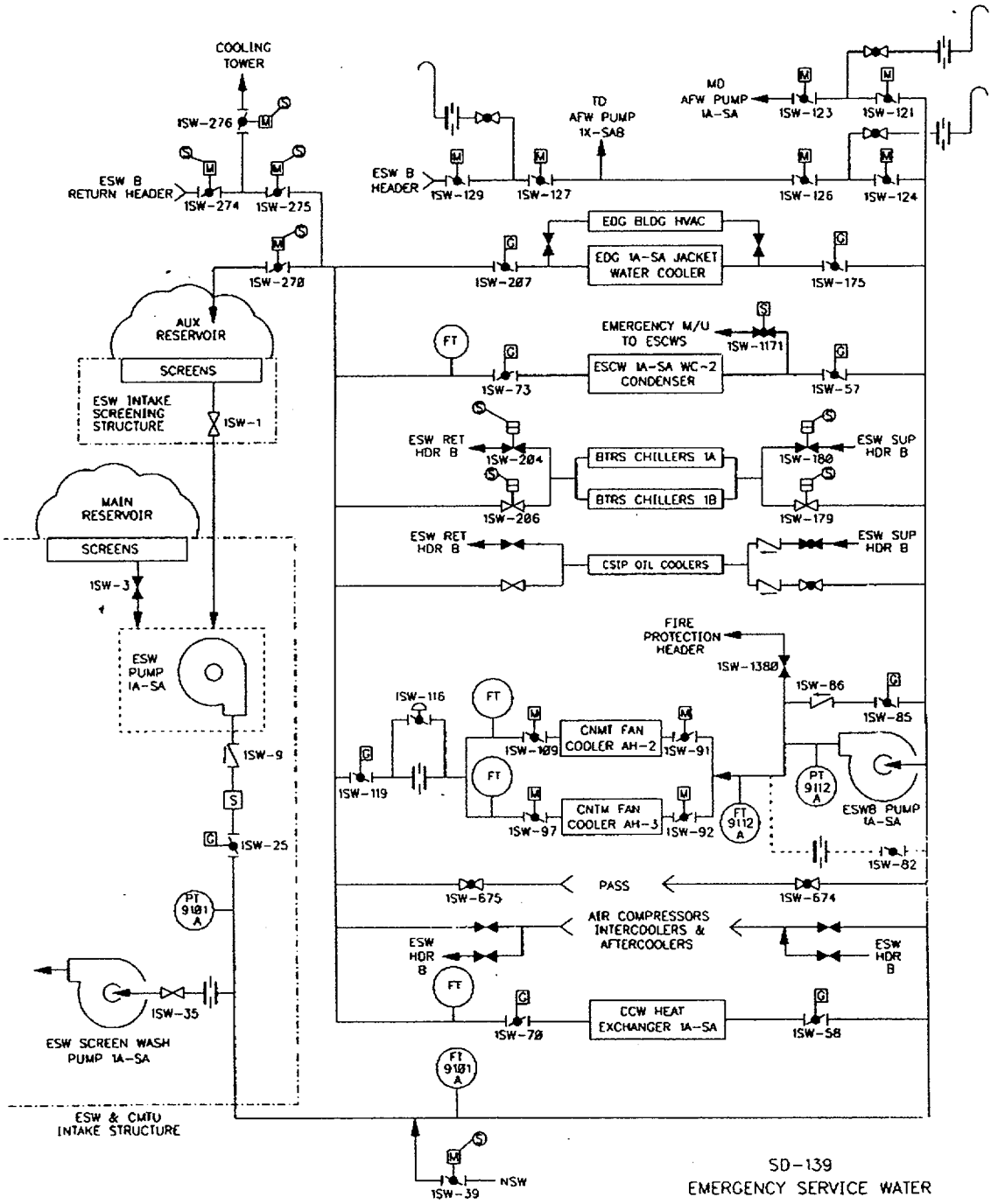

SD-139
EMERGENCY SERVICE WATER
TRAIN A
FIGURE 7.1

Figure 7.2
Emergency Service Water System, Train B

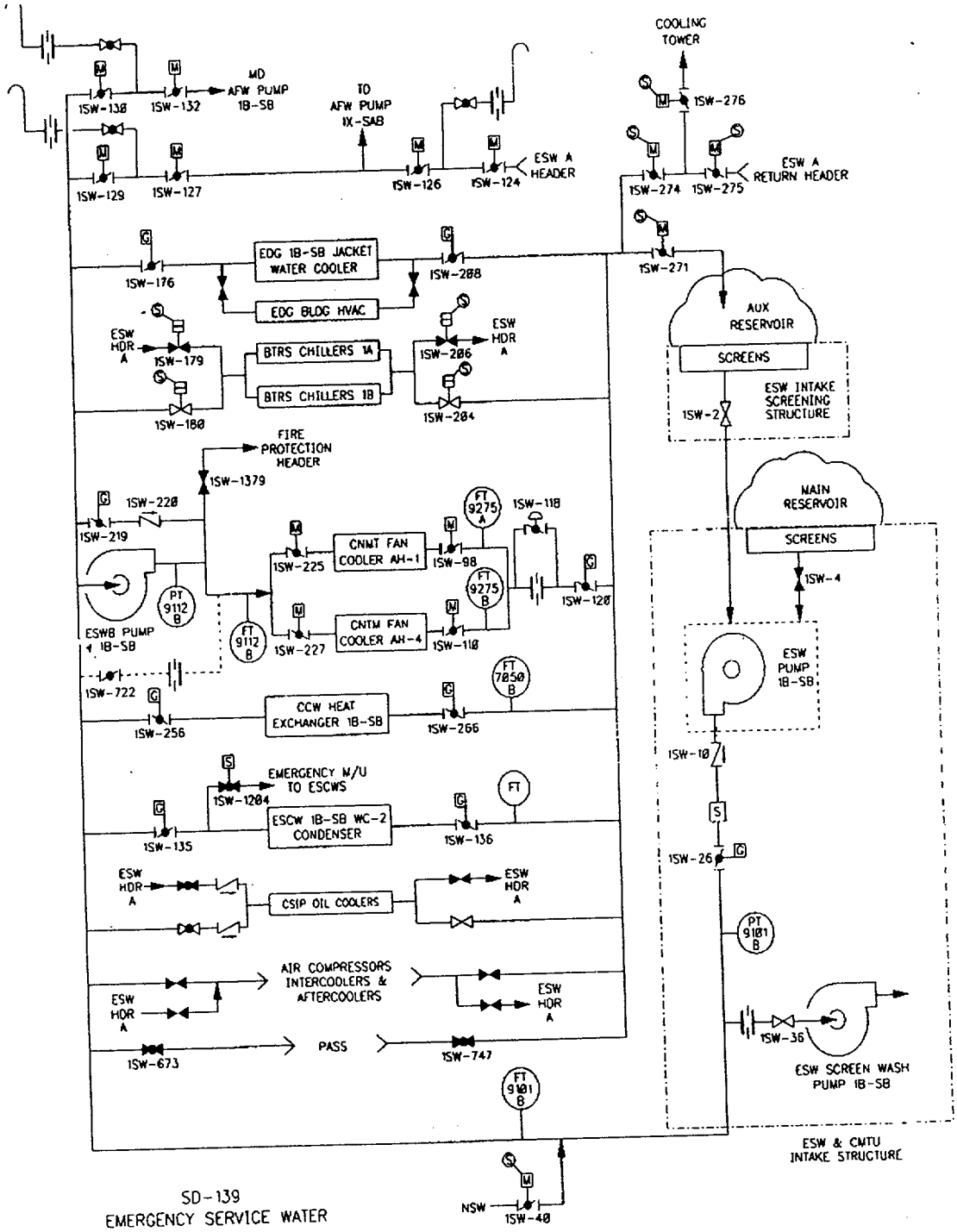

SD-139
EMERGENCY SERVICE WATER
TRAIN B
FIGURE 7.2

Figure 7.3

Normal Service Water System

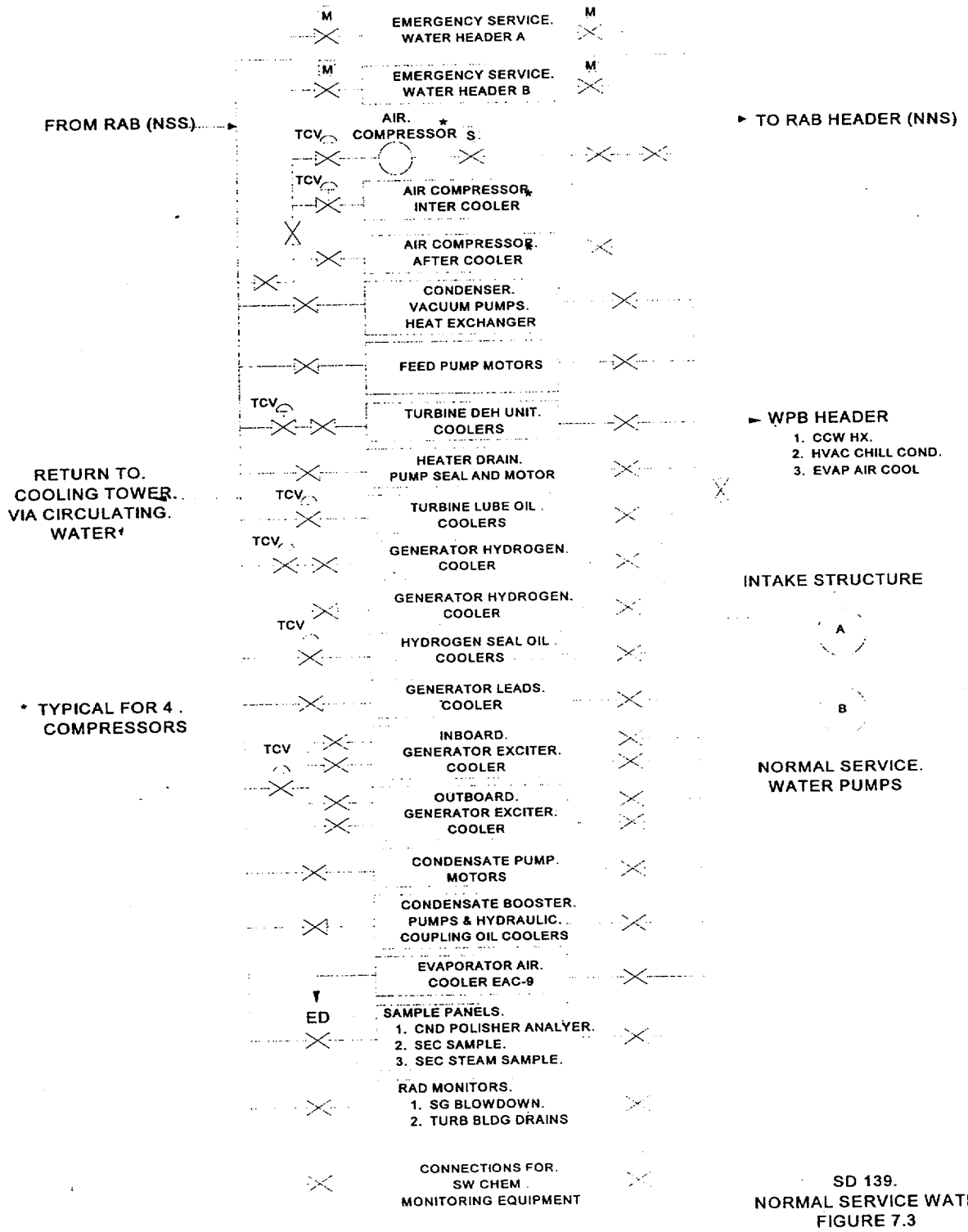

Figure 7.4

Service Water System Yard Piping

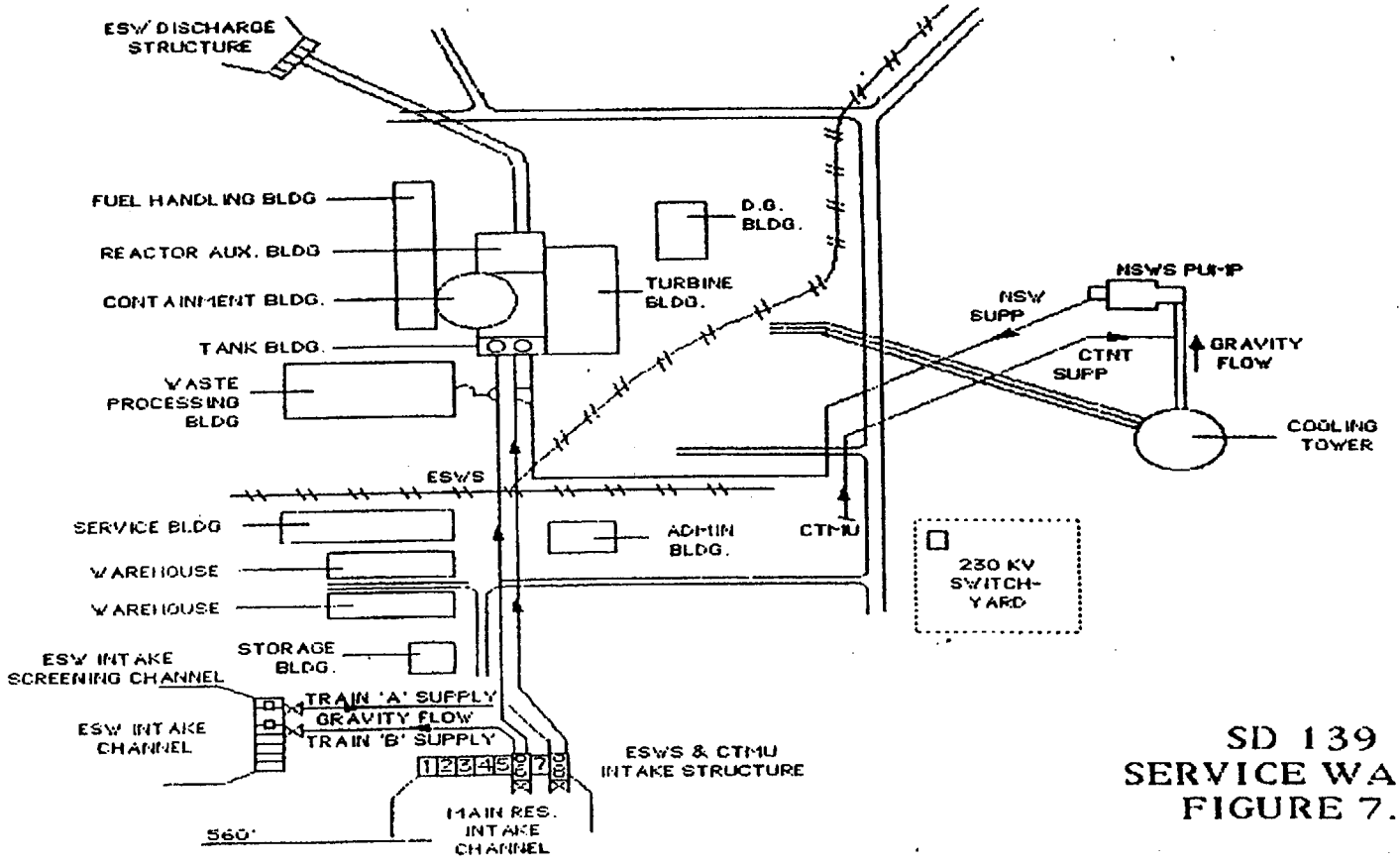

SD 139
SERVICE WATER
FIGURE 7.4

Figure 7.5

NSW Bearing Lubrication and Motor Cooling

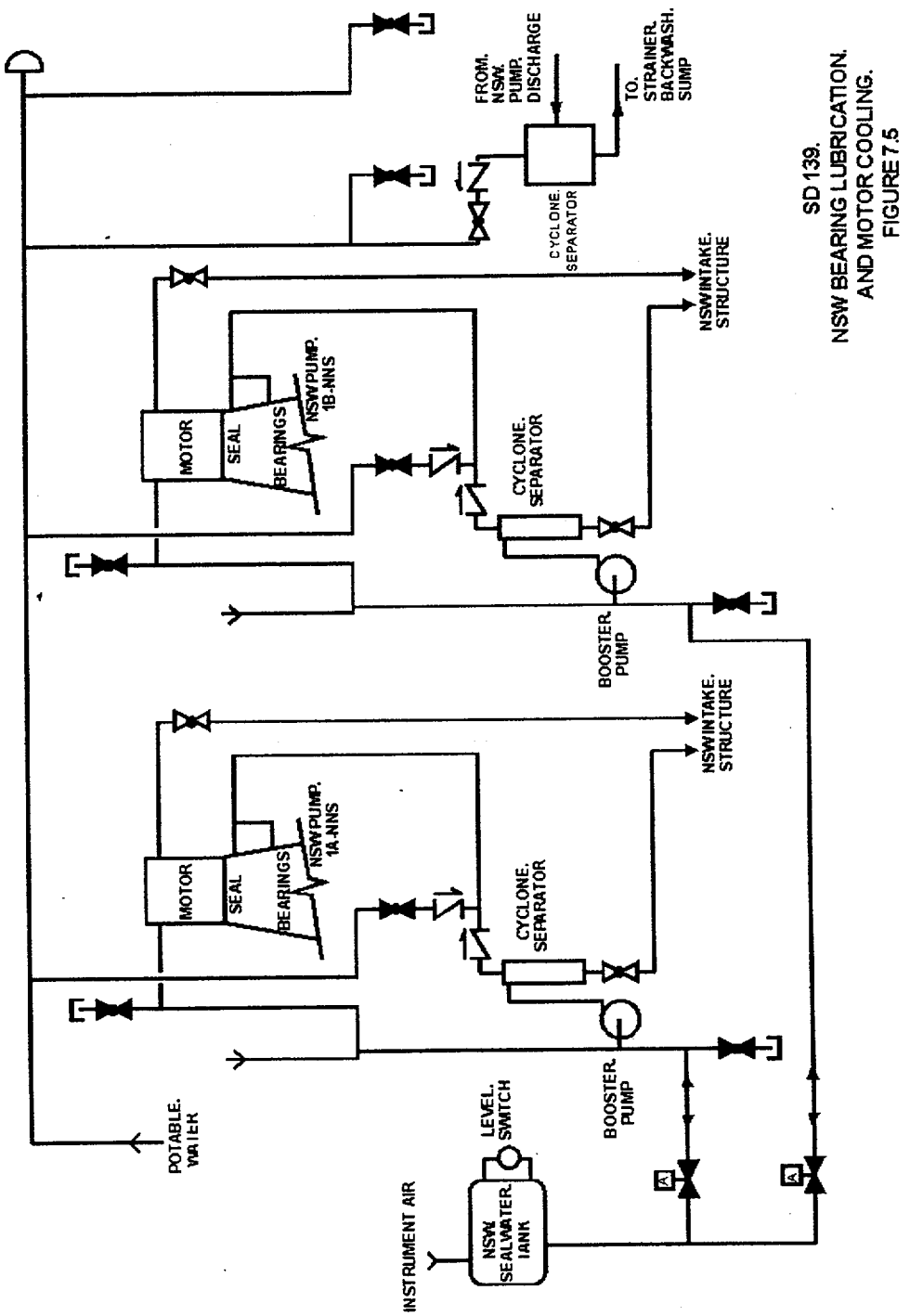

Figure 7.6

ESW Pump Seal/Bearing Water

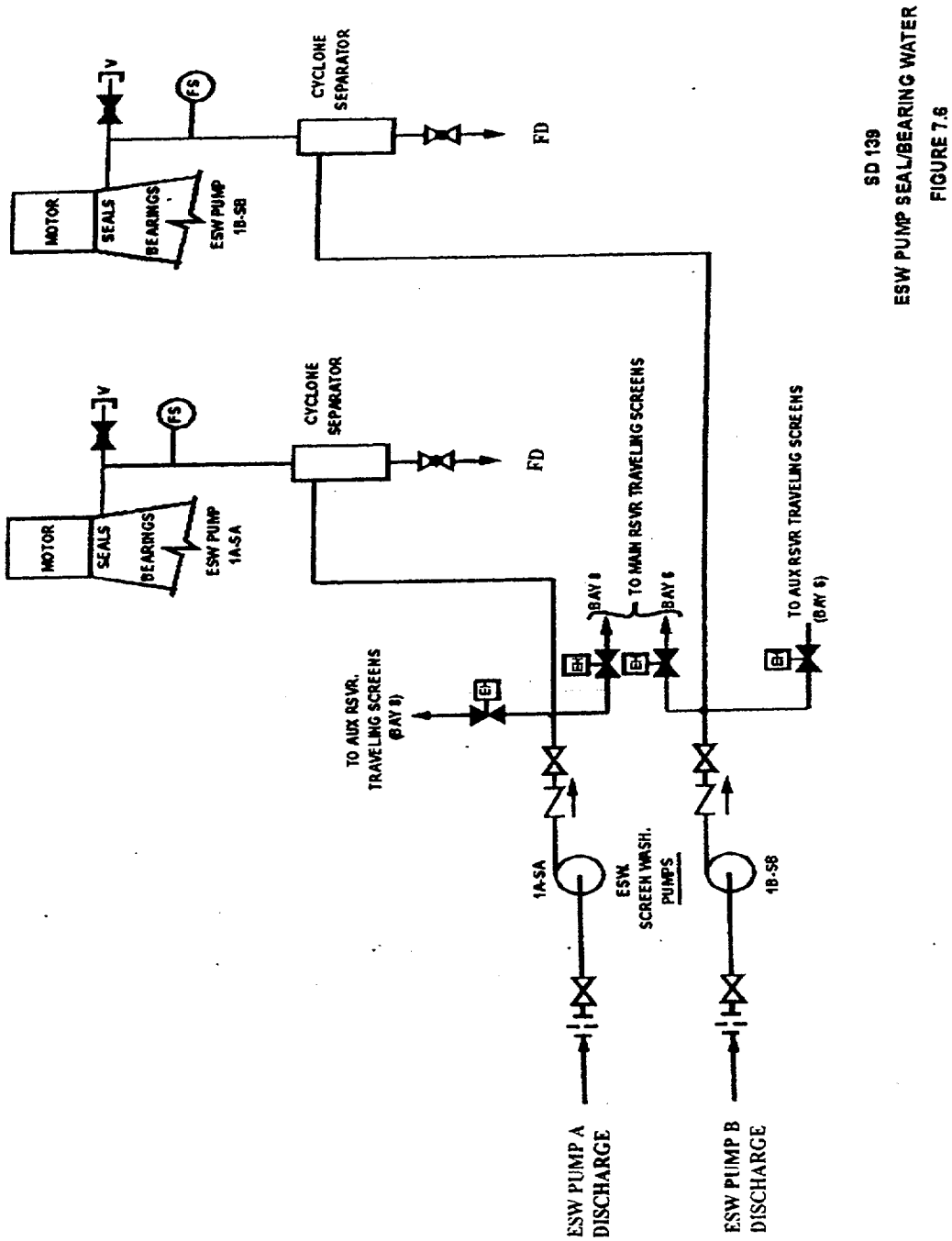

SD 139
ESW PUMP SEAL/BEARING WATER
FIGURE 7.6

8.0 REFERENCES

8.1 Drawings

8.1.1 System Drawings

Drawing Number	Title
2165-G-047	Flow Diagram - Circulating and Service Water System, Sheet 1, Unit 1
2165-G-048	Flow Diagram - Circulating and Service Water System, Sheet 2, Unit 1
2165-G-436	Flow Diagram - Intake Structures Pump Seal, Bearing Lubrication and Motor Cooling Water Systems
2165-G-876	Flow Diagram - Cooling Water System for Waste Processing Building, Sheet 1
2165-G-133	Flow Diagram - Diesel Generator Systems, Unit 1
2165-S-0547	Simplified Flow Diagram - Circulating and Service Water Systems, Sheet 1, Unit 1
2165-S-0548	Simplified Flow Diagram - Circulating and Service Water Systems, Sheet 2, Unit 1
2165-S-0936	Simplified Flow Diagram - Intake Structures Pump Seal, Bearing Lubrication and Motor Cooling Water Systems, Unit 1
2165-S-1376	Simplified Flow Diagram - Cooling Water System for Waste Processing Building, Sheet 1, Unit 1
2165-S-0633	Simplified Flow Diagram - Diesel Generator Systems, Unit 1
2166-G-425S01	Service Water Pumps, Discharge Header Valves and Service Water Booster Pumps Instrument Schematics and Logic Diagram, Unit 1
2166-G-425S02	Service Water Pumps, Discharge Header Valves and Service Water Booster Pumps Instrument Schematics and Logic Diagram, Unit 1
2168-G-497S02	HVAC - Non-Essential Chilled Water - Condenser Flow Diagram - WPB
2168-G-498S02	HVAC - Essential Services Chilled Water -Condenser Flow Diagram - Unit 1 - SA
2168-G-499S02	HVAC - Essential Services Chilled Water -Condenser Flow Diagram - Unit 1 - SB

8.1.2 Control Wiring Diagrams

Drawing Number		Title
2166-B-401	Sheet	
	2181	NSW Pump 1A-NNS Sheet 1
	2182	NSW Pump 1B-NNS Sheet 1
	2183	NSW Pumps Instrumentation
	2185	NSW Pump 1A Dischg. Valve 7SW-B37-1
	2186	NSW Pump 1B Dischg. Valve 7SW-B38-1
	2188	NSW Pumps Strainer 7SW-S23-1 & Va. 7SW-H1-1
	2189	NSW Pump 1A-NNS Sheet 2
	2190	NSW Pump 1B-NNS Sheet 2
	2191	NSW Seal & Brg. Clg Wtr Booster Pump 1A-NNS
	2192	NSW Seal & Brg. Clg Wtr Booster Pump 1B-NNS
	2197	Exciter Cooler Outlet Valve (TCV-0951)
	2198	Hydrogen Cooler Outlet Valve (TCV-0950)
	2199	H2 Seal Oil & DEH Cooler Instrumentation
	2201	Turbine Lube Oil Coolers Outlet Valve (TCV-4750)
	2202	Turbine Gen. Cooler Valves Indication
	2207	NSW Supply Hdr "A" Isol. Valve 3SW-B5SA-1
	2208	NSW Supply Hdr "B" Isol. Valve 3SW-B6SB-1
	2211	ESW Pump 1A-SA
	2212	ESW Pump 1B-SB
	2213	ESW Pumps Instrumentation
	2216	ESW Pump 1B-SB Inlet Va. - Main Reservoir - 3SW-B4SB-1 & Aux. Reservoir 3SW-B2SB-1
	2217	ESW Pump 1A-SA Inlet Va. - Main Reservoir - 3SW-B3SA-1 & Aux. Reservoir 3SW-B1SA-1
	2220	Main Reservoir Level Instrumentation

8.1.2 Control Wiring Diagrams (continued)

Drawing Number Sheet	Title
2221	ESW Pump 1A-SA Strainer 3SW-S21SA-1 & Valve 3SW-H2SA-1
2222	ESW Pump 1B-SB Strainer 3SW-S22SB-1 & Valve 3SW-H3SB-1
2223	ESW Pump 1A-SA Dischg. Valve 3SW-B7SA-1
2224	ESW Pump 1B-SB Dischg. Valve 3SW-B9SB-1
2227	Service Water Sys. "A" Misc. Alarms Sh. 1
2228	Service Water Sys. "B" Misc. Alarms Sh. 2
2229	Service Water Sys. "A" & "B" Misc. Alarms, Sh. 3
2231	Service Water System "A" Misc. Alarms, Sh. 4
2232	Service Water Sys. "B" Misc. Alarms, Sh. 5
2233	Service Water Booster Pump 1A-SA
2234	Service Water Booster Pump 1B-SB
2235	Service Water Booster Pumps Instrumentation (Pressure & Flow)
2237	Contmt. Service Water "A" & "B" Return Orifice Bypass Valves 3SW-B64SA-1 & 3SW-B65SB-1
2241	Serv. Water from Containment Fan Coolers AH-2 (SA) & AH-3 (SA) Instrumentation
2242	Serv. Water from Containment Fan Coolers AH-1 (SB) & AH-4 (SB) Instrumentation
2245	Serv. Water to Containment Fan Cooler AH-3 Inlet Valve 2SW-B46SA-1
2246	Serv. Water from Containment Fan Cooler AH-3 Outlet Valve 2SW-B47SA-1
2247	Service Water to Containment Fan Cooler AH-2 Inlet Valve 2SW-B45SA-1
2248	Service Water from Containment Fan Cooler AH-2 Outlet Valve 2SW-B49SA-1

8.1.2 Control Wiring Diagrams (continued)

Drawing Number Sheet	Title
2249	Service Water to Containment Fan Cooler AH-1 Inlet Valve 2SW-B52SB-1
2250	Service Water from Containment Fan Cooler AH-1 Outlet Valve 2SW-B48SB-1
2251	Service Water to Containment Fan Cooler AH-4 Inlet Valve 2SW-B51SB-1
2252	Service Water from Containment Fan Cooler AH-4 Outlet Valve 2SW-B50SB-1
2253	Service Water to Containment Fan Coil Units Isol. Va. 2SW-B88SAB-1
2254	Service Water Return from Containment Fan Coil Units Isol. Valve 2SW-B89SA-1
2255	Service Water Return from Containment Fan Coil Units Isol. Valve 2SW-B90SB-1
2257	Hdr. "A" Service Water Backup to AFWP 1X-SAB Supply Valve 3SW-B70SA-1
2258	Hdr. "A" Service Water Backup to AFWP 1X-SAB Supply Valve 3SW-B71SA-1
2259	Hdr. "B" Service Water Backup to AFWP 1X-SAB Supply Valve 3SW-B73SB-1
2260	Hdr. "B" Service Water Backup to AFWP 1X-SAB Supply Valve 3SW-B72SB-1
2261	SW Backup to AFWP 1A-SA Supply Valve 3SW-B75SA-1
2262	SW Backup to AFWP 1A-SA Supply Valve 3SW-B74SA-1
2263	SW Backup to AFWP 1B-SB Supply Valve 3SW-B77SB-1
2264	SW Backup to AFWP 1B-SB Supply Valve 3SW-B76SB-1
2267	SW to & from Component Clg. Wtr. HX "A" Instr. & Alarms

8.1.2 Control Wiring Diagrams (continued)

Drawing Number Sheet	Title
2268	SW to & from Component Clg. Wtr. HX "B" Instr. & Alarms
2272	Serv. Wtr./CVCS Chiller Isolation Valves 3SW-V266SA-1 & 3SW-V237SA-1
2273	Serv. Wtr./CVCS Chiller Isolation Valves 3SW-V267SB-1 & 3SW-V238SB-1
2280	"A" Service Water Hdr. Return to Normal Service Water Hdr. 3SW-B13SA-1
2282	"B" Service Wtr. Hdr. Return to NSW Hdr. 3SW-B14SB-1
2284	Reactor Aux. Bldg. Return SW Main Hdr. Isolation Valve 3SW-B8SB-1
2286	Service Water Return Hdr. A Shutoff Valve to Aux. Reservoir 3SW-B15SA-1
2287	Service Water Return Hdr. B Shutoff Valve to Aux. Reservoir 3SW-B16SB-1
2290	Service Water Manual Return Valve 7SW-B53-1 Indication
2451	Air Compressor 1A-NNS
2452	Air Compressor 1B-NNS
2598	Chiller WC-2 (1A-SA) Chilled Water Alarms, Sh. 1
2599	Chiller WC-2 (1B-SB) Chilled Water Alarms, Sh. 1
2601	Chiller WC-2 (1A-SA) Compressor, Sh. 1
2605	Chiller WC-2 (1A-SA) Condenser Water Recirculating Pump P7 (1A-SA)
2612	Chiller WC-2 (1A-SA) Condenser Water Supply Valve 3SW-B300SA-1
2617	Water Chiller WC-2 (1A-SA) Emergency Makeup Water Supply Valve 3SW-V868SA-1

8.1.3 SW System Component Instr. Schematics and Logic Diagrams

Drawing Number	Sheet	Title
2166-B-430		
	13.1	DEH & Lube Oil Coolers
	13.2	Hydrogen Seal Oil Coolers
	13.3	Hydrogen & Exciter Coolers
	21.1	Serv. Wtr. for Aux. F. Wtr. Pumps
	21.2	Serv. Wtr. to & from Comp. Clg. Wtr. HX
	21.3	Serv. Wtr. to & from Containment Fan Coolers AH-2&3
	21.4	Serv. Wtr. to & from Containment Fan Coolers AH-1&4
	21.5	Serv. Wtr. to & from Air Compressors & Aftercoolers
	21.7	Serv. Wtr. to & from Containment Fan Coil Units
	21.12	Serv. Wtr. to Aux. Bldg HVAC Chillers WC-2

8.1.4 Manufacturer's Drawing

Drawing Number	Title
1364-3957	ESW Self-Cleaning Strainer Control Panel
1364-4553	Dresser Instruments - Thermometer, Model 50EI60E
1364-5229	Masoneilan Int'l - Pneumatic Actuator Models 33-37310 & 8005A
1364-5899	Valtek - Mark I Valve Actuators
1364-4010	Rosemount - Pressure Transmitter, Model 1153B
1364-4009	Rosemount - Temperature Transmitter, Model 444
1364-6431	Weed Instr. - Thermocouple Type E4B250G-(L)AS
1364-4178	Mercoid - Pressure Switch Model DAW-7043-804B
1364-4761	Mercoid - Pressure SW Diff., Model DPAW-7033-804B
1364-2127	Versa Pac Motor Outline - NSW Pump
1364-3189	Siemens-Allis - SW Bstr. Pump
1364-1990	Air Compressor SW Piping Arrangement & Instruments
1364-1996	Weston - Temperature Gage, Models 4300 & 4310

8.1.4 Manufacturer's Drawing (continued)

Drawing Number	Title
1364-16589	General Electric - ESW Pump Motor
1364-2900	Jamesbury Valve - 30" Wafer Sphere 150# Flanged
1364-5201	Pyco - Temperature Gages Model 23-7156
1364-41808	United Electric - Press. Diff. SW Model J27KB
1364-4763	Pyco - Temperature Ind. SW. - Model 23-7148
1364-96530,S01,S02	Anchor/Darling Valve - 30" Wafer Butterfly, 150#
1364-96531,S01,S02	Anchor/Darling Valve - 36" Wafer Butterfly, 150#
1364-7370	ESW Pump General Arrangement Dwg.
1364-43477	ESW Pump Cross-Sectional Dwg.
1364-43475	ESW Pump BOM
1364-43476	ESW Pump Spare Parts
1364-96537	ESW Pump Lower Seismic Support
1364-45840	ESW Pump 1A-SA Performance Curve
1364-45839	ESW Pump 1B-SB Performance Curve

Notes:

1. The drawing number listed is not applicable to all applications of the instrument in the Service Water System. Consult the Instrument List for the applicable EMDRAC drawing number.

8.2 Specifications

Specification No.	Title
IN-01	Electronic Instrumentation
IN-03	Orifices
IN-04	Thermocouple Assemblies
IN-07	Local Pressure Gages

8.2 Specifications (continued)

Specification No.	Title
IN-08	Local Dial Thermometers
IN-09	Temperature Switches
IN-10	Pressure Switches
IN-33	Level Transmitters
IN-35	Low Range Flow Switches
M-12	Miscellaneous Pumps
M-32P	2 1/2 Inch & Larger Valves
M-34	2 Inch & Smaller Valves
M-44	Butterfly Valves
M-49M	Strainers
M-60	Self-Cleaning Strainers
M-66	Miscellaneous Control Valves
M-67H	NSW & Clg Twr M/U Pumps
M-67P	ESW Pumps
M-78	ESW Intake Structure Butterfly Valves
E-13	Auxiliary Motors
CPL-HNP1-M-029	Emergency Service Water Butterfly Valves

8.3 Technical Manuals

Equipment Name	Manual	Manufacturer
Emergency S. W. Pumps	KIS	Hayward Tyler
ESW Self-Cleaning Strainer	JCE	R. P. Adams Co., Inc.
SW Booster Pumps	BHQ	Gould Pumps, Inc.
ESW Pump Motor	IJX	General Electric
SW Booster Pump Motor	IJU	Siemens-Allis
NSW Flushing Wtr. Bstr Pump	IJR	Peerless
NSW Flushing Wtr. Bstr Pump Motor	IJR	Peerless

8.3 Technical Manuals (continued)

Equipment Name	Manual	Manufacturer
NSW Pump	IJR	Peerless
NSW Pump Motor	IJU	Allis-Chalmers
SW Sys. Check Valves	BIV	TRW Mission
Masoneilan Control Valves	BJW	Masoneilan
2" & Smaller Valves	BKP	Yarway
2" & Smaller Valves	NWD, BKK	Rockwell Int'l
Misc. Butterfly Valves (ESW & NSW)	BKG	Jamesbury Corp.
NSW Self-Cleaning Strainer	BHY	Zurn
ESW-2 1/2" & Larger Valves	BKA	Pacific
30" and 36" Butterfly Valves	BKB	Anchor/Darling

8.4 Other References

8.4.1 ESR 97-00321, "Minimum Flow for NSW Pumps."

Revision Summary

Revised per final turnover of ESR 96-00025, Modification of ESW Pumps.

CAROLINA POWER & LIGHT COMPANY

SHEARON HARRIS NUCLEAR POWER PLANT

PLANT OPERATING MANUAL

VOLUME 6

PART 2

PROCEDURE TYPE: System Description (SD)

NUMBER: SD-145

TITLE: Component Cooling Water System

REVISION 5

RECEIVED
NOV 09 1995
HNP
DOCUMENT CONTROL

4/8

Table of Contents

Section		Page
1.0	SYSTEM PURPOSE	4
2.0	SYSTEM FUNCTION	4
3.0	COMPONENTS	7
3.1	Component Cooling Water Pumps	7
3.2	Component Cooling Water Heat Exchangers	8
3.3	Component Cooling Water Surge Tank	9
3.4	Component Cooling Water System Piping	10
3.5	Air-Operated Valves	10
3.6	Motor-Operated Valves	11
3.7	Component Cooling Water Drain Tank	13
3.8	Component Cooling Water Drain Tank Pump	13
3.9	Component Cooling Water Hold-up Tank	13
3.10	Component Cooling Water Hold-up Tank Pump	13
4.0	OPERATIONS	13
4.1	Start Up Operation	13
4.2	Normal Operation	14
4.3	Shutdown Operation	16
4.4	Post-Accident Operation	16
4.5	Operation with Diesel Generator	18
4.6	Limiting Conditions for Operation	18
4.7	Leak Detection	18
4.8	Operational Experience	19
5.0	INTERFACE SYSTEMS	20
5.1	Systems Required for Support	20
6.0	TABLES	20
6.1	Instrumentation for Flow Balance and Leak Detection	21
7.0	FIGURES	23
7.1	Component Cooling Water System	24
7.2	Component Cooling Water RHR Essential Loop	25
7.3	Component Cooling Water RAB Non-Essential Loop	26
7.4	CCW Containment Non-Essential Loop	27
7.5	Component Cooling Water Drain System	28

Table of Contents (continued)

Section		Page
8.0	REFERENCES	29
8.1	Drawings	29
8.1.1	Flow Diagrams	29
8.1.2	Simplified Flow Diagrams	29
8.1.3	Control Wiring Diagrams	29
8.1.4	Foreign Prints	31
8.1.5	General Plans	32
8.1.6	Manufacturer Drawings (EMDRAC)	32
8.2	Specifications	33
8.3	Technical Manuals	33
8.4	Others	34

1.0 SYSTEM PURPOSE

The Component Cooling Water System (CCWS) is designed to meet all plant component cooling loads during normal operation, assuming the highest possible service water temperature (service water design temperature).

Component cooling water transfers heat from the various components to the component cooling heat exchangers that are cooled by the Service Water System. This double barrier arrangement reduces the probability of leakage of potentially radioactive effluent into the Service Water System and ensures that any leakage of the radioactive fluid from the components being cooled is contained within the plant.

Leakage of service water into the component cooling water is detrimental to the physical integrity of various stainless steel components, such as reactor coolant pumps, heat exchangers and so forth, because of possible chloride-induced stress corrosion. To prevent such an occurrence, the CCWS is maintained at a higher pressure than the Service Water System.

The CCWS is designed to act as a barrier against leaking radioactive reactor coolant to the atmosphere. This is assured by having radiation monitors on the CCWS heat exchanger outlet lines, water level indication on the surge tank, and by the ability to valve off leaking components.

The Component Cooling Water System is an engineered safeguards system. It is required for post-accident removal of decay heat from the reactor and for providing cooling water to safeguards pumps. It is designed to meet the single failure criteria. Two completely independent, parallel trains are available, each consisting of one pump and one component cooling heat exchanger. A third pump is available as a standby. Each CCW train services the associated train of those safeguards components that require component cooling water. The surge tank is separated into two parts by a baffle that provides separate surge volumes for each of the two trains.

2.0 SYSTEM FUNCTION

The CCWS Flow Diagrams are show on Figures 7.1 through 7.5. Design parameters for the major equipment in the CCWS are listed in Section 3.0. The CCWS is designed to operate during all phases of plant operations including startup, power operation, shutdown, refueling, and the injection and recirculation phases following a loss of coolant accident (LOCA).

The CCWS consists of two 100 percent-capacity component cooling water pumps, two heat exchangers, one drain tank, one surge tank (internally divided), one holdup tank, one drain tank pump, one holdup tank pump, associated piping, valves, and instrumentation. The CCWS consists of redundant (2) essential loops and a nonessential loop supplied by either or both of the essential loops.

2.0 SYSTEM FUNCTION (continued)

During normal operation, component cooling water will be pumped by one CCWS pump through the shell side of a component cooling heat exchanger, where it will be cooled by service water, and then through the nonessential loop. Parts of the nonessential loop are automatically isolated from the essential loops when the Safety Injection Signal is activated or it may be normally isolated if desired (Section 4.4). CCW will be directed through the RHR pump's seal cooler during normal operations; however, it will not be directed through the RHR heat exchangers.

The equipment comprising the previous described loops is listed in the following paragraphs:

1. Each of the two essential loops consist of the following:

   a. One RHR heat exchanger.

   b. One RHR pump seal cooler.

2. The nonessential loop consists of the following:

   a. One letdown heat exchanger (CVCS).

   b. One seal water heat exchanger (CVCS).

   c. Two spent fuel pool heat exchangers (SFPCCS).

   d. One boron recycle evaporator package consisting of one distillate cooler, one evaporator condenser, and one vent condenser (BRS).

   e. Three reactor coolant pump packages, each consisting of one upper bearing lube oil cooler, one lower bearing oil cooler, and one thermal barrier cooler (RCS).

   f. One gross failed fuel detector cooler (GFFDS).

   g. One excess letdown heat exchanger (CVCS).

   h. One reactor coolant drain tank heat exchanger (WPS).

   i. Six sample coolers (PSS).

Upon loss of CCW, the most critical loads that would cause shutdown are the letdown heat exchanger and the reactor coolant pump packages.

2.0 SYSTEM FUNCTION (continued)

During normal power operation one component cooling pump and one component cooling heat exchanger will accommodate the heat removal loads. One of the two standby pumps and the other heat exchanger will provide 100 percent backup during normal operation. Two pumps and two heat exchangers will normally be utilized to remove the residual and sensible heat during unit cooldown. The design cooldown rate, based on reducing the temperature of the reactor coolant from 350°F to 140°F in 17 hours, is achieved using two CCWS pumps and two CCWS heat exchangers. Failure of a heat exchanger would increase the time required for shutdown but would not affect the safe operation of the plant. Failure of a pump would not affect the time required for shutdown since a standby pump is available. Safety injection heat removal requirements will be met with one pump and one heat exchanger in operation. Two loops, operating with two pumps and two heat exchangers, will normally be utilized to remove heat during post LOCA recirculation. If one loop is not available, the other loop, with one pump and one heat exchanger, will be utilized to remove the residual and sensible heat during unit cool down.

Makeup water for the CCWS will be taken from the Demineralized Water System or the Primary Makeup System (emergency makeup only) and delivered to the surge tank. The surge tank accommodates surges resulting from component coolant water thermal expansion and contraction and accommodates water that may leak into the system from components that are being cooled. The surge tank also contains a supply of water to provide component cooling water supply until a leaking cooling line can be isolated. The surge tank water level is adjusted manually from the Control Room by delivering makeup water from the Demineralized Water System to the tank.

Water chemistry control of the CCWS is accomplished by additions of Molybdate-Nitrite-Tolytriazole (MNT) solution to the chemical addition tank or to the surge tank. Mixing the MNT with the loop water will be accomplished by recirculation through either tank. The CCWS is designed on the basis that the following CCW chemistry is maintained:

a.	Corrosion Inhibitor	≥300 ppm Molybdate
		≥300 ppm Nitrite
		≥10 ppm Tolytriazole
b.	Ph at 25°C	8.5 to 9.5
c.	Chloride ppm (max)	0.15
d.	Fluoride ppm (max)	0.15
e.	Makeup Water	Same quality as listed for the Reactor Coolant System

2.0 SYSTEM FUNCTION (continued)

A corrosion coupon rack located on the CCW supply header to the sample coolers monitors the general corrosion rates of alloys exposed to MNT.

An indication of the flow requirements to the various component cooling loads is given in the SHNPP FSAR 9.2.2.

To assure reliability, the component cooling pumps and the motor operated valves are connected to two separate buses so that each train of CCW equipment performing similar functions will receive power from different sources.

An emergency power source is required to supply essential electrical equipment if a total loss of normal power should occur. Pumps and valves performing similar functions are connected to separate and redundant electrical power and control circuits.

In order for Pump C to replace either Pump A or B and to maintain redundancy in electrical power supply and control, Pump C has a dual breaker arrangement so that it can be powered and started from the same electrical circuits as the pump it replaces. Furthermore, provisions are made so that it cannot be connected to both redundant circuits at the same time, which would violate separation and single failure criteria. Due to equipment and cable work, approximately an eight hour period is required to switch Pump C from one train to another.

3.0 COMPONENTS

3.1 Component Cooling Water Pumps

There are three CCWS pumps. The pumps are horizontally mounted, centrifugal pumps, driven by air cooled, three phase induction motors. The design capacity of each pump equals or exceeds the required capacity for single pump operation during normal operation, safety injection, and post accident recirculation on a redundant train basis. CCW pump design data is listed below.

CCW Pump Design Data

Design Pressure	150 psig
Design Temperature	200°F
Design Flow Rate	8050 gpm
Minimum developed head at design flow	211 ft

3.1 Component Cooling Water Pumps (continued)

Component Cooling Pump "C" is designed to be able to replace either Pump "A" or "B". Manually operated cross connect valves allow Pump "C" to be aligned with either safeguard train. Additionally, two power supplies are available (one supply from each emergency bus) so that Pump C's power supply can be aligned to the bus that supplies the pump it is replacing. Start-stop-spring return control switches and monitor lights are provided on the MCB/ACP. Specific component data is listed below.

CCW Pump 1A-SA

Location	Elevation 236 Coordinate RAB-15B
Power Supply	6.9KV Emergency Bus 1A-SA Cubicle 8
Control Location	MCB/ACP

CCW Pump 1B-SB

Location	Elevation 236 Coordinate RAB-31B
Power Supply	6.9KV Emergency Bus 1B-SB Cubicle 8
Control Location	MCB/ACP

CCW Pump 1C-SAB

Location	Elevation 236 Coordinate RAB-18B
Power Supply	6.9KV Emergency Bus 1A-SA Cubicle 3
	6.9KV Emergency Bus 1B-SB Cubicle 10
Control Location	MCB/ACP

3.2 Component Cooling Water Heat Exchangers

The CCWS heat exchangers are shell and straight tube type units. Component cooling water circulates through the shell side. The shell is constructed of carbon steel and the tubes are made of 90-10 copper nickel alloy. The Service Water, which may foul the heat transfer surfaces, is passed through the tubes which are easier to clean than the shell.

CCWS Heat Exchangers 1A-SA and 1B-SB are located on Elevation 236 RAB Coordinate 15C and 36C, respectively. CCWS heat exchanger design data is listed below.

3.2 Component Cooling Water Heat Exchangers (continued)

CCW Heat Exchanger

Design heat transfer, btu/hr 50.05×10^6

	Shell	Tube
Fluid Circulated	Component Cooling Water	Service Water
Material	Carbon Steel	90-10 Cu-Ni Alloy
Design Pressure, psig	150	150
Design Temperature °F	200	200
Design Flow Rate, lb/hr	4.57×10^6	6×10^6
Operating Inlet Temperature °F	115.8	95
Operating Outlet Temperature °F	105	103.4

3.3 Component Cooling Water Surge Tank

The CCWS surge tank is cylindrical, horizontal, and made of carbon steel. This tank is located on RAB Elevation 305 Coordinate 31B.

The surge tank design permits:

1. The surge tank to accommodate changes in CCWS water volume to changes in operating temperature.

2. A volume to accommodate, for 20 minutes, the maximum flow from either makeup water supply.

3. A reservoir of water to provide time to locate and terminate a system leak should one develop.

4. A volume to accommodate, for about 2 hours, the Technical Specification maximum identified reactor coolant leakage of 10 gpm.

The CCWS surge tank is located at an elevation that ensures adequate net positive suction head (NPSH) to the CCWS pumps.

3.4 Component Cooling Water System Piping

Carbon steel is used for piping since it has good corrosion resistance when in contact with the M-N-T treated component cooling water. All piping joints and connections are welded. Flanged connections are used at pumps, heat exchangers, valves, and instrumentation connections to facilitate removal for maintenance.

3.5 Air-Operated Valves

The air-operated valves listed below are Q-Class "A" and are included in the ISI program.

3.5.1 1CC-337 (1-TCV-144)

1CC-337 is located on the inlet line to the letdown heat exchanger. The power supply for this valve is 125V DC DP-1A Circuit 6. A shut-open-spring return to normal control switch and monitor lights are provided on the MCB.

3.5.2 1DW-15

1DW-15 is located on the inlet line to the CCW surge tank. Monitor lights and a shut-open-spring return to normal control switch are provided on the MCB. The power supply for this valve is 125V DC DP-1A Circuit 12.

3.5.3 1CC-305 (1-LCV-676), 1CC-304 (1-LCV-670)

1CC-305 and 1CC-304 are located on the inlet lines to the Gross Failed Fuel Detector. Valves 1CC-305 and 1CC-304 are powered from 125V DC DP 1B-SB Circuit 13 and 125V DC DP 1A-SA Circuit 13, respectively. Monitor lights and a shut-open-spring return to normal control switches are provided on the MCB.

3.5.4 1CC-114, 1CC-115

1CC-114 and 1CC-115 are located on the inlet lines to the sample system heat exchangers. A shut-open-spring return to normal control switch and monitor lights are provided on the MCB. Valves 1CC-114 and 1CC-115 are powered from 125V DC DP 1A-SA Circuit 24 and 125V DC DP 1B-SB Circuit 26, respectively.

3.6 Motor-Operated Valves

3.6.1 1CC-128, 1CC-99, 1CC-127, 1CC-113

Valves 1CC-128 and 1CC-99 are provided in the suction and discharge headers, respectively, of CCW Pump 1A, while Valves 1CC-127 and 1CC-113 are provided in the suction and discharge headers, respectively, of CCW Pump 1B. Shut-open-spring return to normal control switches and monitor lights are provided on the MCB.

	Power Supply
1CC-99	480V MCC 1A35(SA) Component 8B
1CC-113	480V MCC 1B35(SB) Component 9B
1CC-127	480V MCC 1B35(SB) Component 9A
1CC-128	480V MCC 1A35(SA) Component 8A

3.6.2 1CC-176, 1CC-202

Valves 1CC-176 and 1CC-202 are installed, respectively, in the headers to and from the excess letdown heat exchanger and the reactor coolant drain tank heat exchanger. Shut-open-spring return to normal control switches and monitor lights are provided on the MCB.

	Power Supply
1CC-176	480V MCC 1B31(SB) Component 5D
1CC-202	480V MCC 1B31(SB) Component 11C

3.6.3 1CC-207, 1CC-208

Valves 1CC-207 and 1CC-208 are installed in series in the cooling water inlet header to the reactor coolant pumps. Shut-open-spring return to normal control switches and monitor lights are provided on the MCB.

	Power Supply
1CC-207	480V MCC 1A31(SA) Component 11D
1CC-208	480V MCC 1B31(SB) Component 11D

3.6.4 1CC-249, 1CC-251

Valves 1CC-249 and 1CC-251 are installed in series in the cooling water return lines from the reactor coolant pump lower bearings and thermal barriers. Shut-open-spring return to normal control switches and monitor lights are provided on the MCB for these valves.

Power Supply

1CC-249	480V MCC 1A21(SA) Component 3C
1CC-251	480V MCC 1B31(SB) Component 10C

3.6.5 1CC-252 (1-FCV-685)

Valve 1CC-252 is located in the outlet header of the reactor coolant pumps' thermal barrier. A shut-open-spring return to normal control switch and monitor lights are provided on the MCB for this valve.

Power Supply

1CC-252	480V MCC 1E12 Component 6B

3.6.6 1CC-297, 1CC-299

Valves 1CC-297 and 1CC-299 are installed in series in the cooling water outlet header from the reactor coolant pump bearing oil coolers. Shut-open-spring return to normal control switches and monitor lights for these valves are provided on the MCB.

Power Supply

1CC-297	480V MCC 1A21(SA) Component 5B
1CC-299	480V MCC 1B31(SB) Component 7B

3.6.7 1CC-147, 1CC-167

Valves 1CC-147 and 1CC-167 are located in the RHR Heat Exchangers 1A and 1B discharge lines, respectively. Shut-open-spring return to normal control switches and monitor lights are provided on the MCB. Alarms are provided on the MCB for each pump to monitor stem position of each isolation valve.

Power Supply

1CC-147	480V MCC 1A35(SA) Component 8C
1CC-167	480V MCC 1B35(SB) Component 9C

3.7 Component Cooling Water Drain Tank

The CCW drain tank is located at RAB Elevation 216 Coordinate 39E. This tank is a carbon steel tank designed for atmospheric pressure and 150°F. The tank volume is 300 gallons.

3.8 Component Cooling Water Drain Tank Pump

The CCW drain tank pump is located at RAB Elevation 216 Coordinate 39E. This pump is a horizontal centrifugal pump with a design flow of 25 gpm at 125 feet total discharge head. Its design pressure and temperature is 260 psig and 200°F, respectively. Power is supplied from 480V MCC 1E22. A start-stop-spring return to normal control switch and monitor lights are located on the WPCB.

3.9 Component Cooling Water Hold-up Tank

The CCW hold-up tank is located at FHB Elevation 216 Coordinate 60Z. This tank is an atmospheric carbon steel tank with a total volume of 10,000 gallons and a design temperature of 150°F.

3.10 Component Cooling Water Hold-up Tank Pump

The CCW hold-up tank pump is located at FHB Elevation 216 Coordinate 60Z. This pump is a horizontal centrifugal pump with a design flow of 200 gpm at 225 feet total discharge head. Power is supplied to this pump form 480V MCC 4B1021 Component 3F. A start-stop-spring return to normal control switch and monitor lights are located on the WPCB.

4.0 OPERATIONS

4.1 Start Up Operation

Plant startup is defined as the operations that bring the reactor plant from cold shutdown to normal operating temperature and pressure.

Generally, during a cold shutdown condition, residual heat from the reactor core is being removed by the Component Cooling and Residual Heat Removal Systems. The number of pumps and heat exchangers in service depends upon the residual heat removal load and auxiliary equipment heat load at a given time.

At the beginning of the plant start-up procedure, the water chemistry of the Component Cooling System is checked. If required, corrosion inhibitor is added to the tank. It is mixed with the loop water by recirculation through the surge tank via the lines provided from the pump discharge header. The surge tank water level is adjusted manually from the main Control Room by operating the demineralized water makeup valve.

4.1 Start Up Operation (continued)

After the reactor coolant pumps are started, the residual heat removal operation is discontinued, and the Residual Heat Removal System is isolated from the Reactor Coolant System. The letdown heat exchanger is placed on automatic temperature control to maintain a constant letdown temperature downstream of the letdown orifices. Valve 1CC-337 controls the CCW flow.

After completion of Reactor Coolant System heatup, one component cooling heat exchanger and one pump are required for operation. One component cooling pump is placed on standby to start automatically on low pressure in the component cooling pump discharge header. Throughout the plant start-up procedure, cooling water flows and temperatures are monitored to verify that the values are within the required limits. At the completion of the start-up procedure adjustments are made, if necessary, to correct cooling water flows. Temperature and flow instrumentation needed to verify parameters is listed in Table 6.1.

4.2 Normal Operation

Normal operation includes the power generation and hot standby operating conditions when the reactor plant is at normal operating temperature and pressure.

Only one component cooling water heat exchanger and one pump are required for operation. One component cooling water pump is placed on standby to start automatically on low pressure in the component cooling water pump discharge header. PT-649 and PT-650 provide the start signals. These instruments also provide alarms on the MCB. The four manual valves in the component cooling pump suction and discharge cross connects are kept closed during normal operation. These valves separate the normally operating component cooling pump from the pump providing backup. By closing these valves, separability is maintained in the suction and discharge headers such that complete redundancy and separation of cooling water trains for post-accident recirculation can be completed remotely from the Control Room by closing the non-safeguards header inlet and outlet isolation valves.

All safeguards pumps receive cooling flow during normal operation via the non-safeguards header cross connect, downstream of the component cooling water heat exchangers and upstream of the component cooling water pump suction header. This allows all safeguards pumps to receive cooling water flow during the injection phase of accident recovery if a component cooling water pump fails as a single active failure.

Periodically, a sample of the component cooling water is taken by plant chemistry personnel to ascertain that water chemistry specifications are met. Chemicals are then added and mixed by recirculation as necessary.

CAUTION

If both spent fuel pool heat exchangers are operating at the same time, then both trains of the CCWS must be operating to supply the additional flow demand and heat transfer capacity necessary to provide design performance cooling.

CCW flow to the letdown heat exchanger is controlled automatically by Valve 1CC-337. Temperature Controller TK-144 in the CVCS monitors the letdown outlet water temperature from the letdown heat exchanger and modulates the CCW flow using 1CC-337.

Makeup water to the CCWS is supplied by the Demineralized Water System. Valve 1DW-15 is operated from the MCB and manually adjusts the CCW surge tank level.

A radiation detector is located in each CCW pump discharge header. When the radiation level of the CCW exceeds a predetermined permissible level, an alarm is activated on the main control board. The relief line of each header opens to an available floor drain. This methodology utilizes the "leak before break" concept to alleviate postulating large inflows of water resulting from a double-ended tube rupture. Mass addition was also lessened by the insertion of two orifices in the supply lines for the CCW System which limits inflow to fifty gpm.

CCW flow from the RCP's thermal barrier will isolate automatically on "Hi" flow. FS-685C will cause Valve 1CC-252 to stroke closed. "Lo" and "Hi" flow conditions will be annunciated on the MCB by FS-685 and FS-685A respectively. CCW flow to the GFFD will isolate on "Lo" surge tank level as sensed by LS-679B and LS-676B.

To preclude discharge of CCW to the environment, a drain tank is provided in the RAB to collect CCW from piping and equipment being drained. Drainage flows to the drain tank by gravity. One drain pump is provided to pump the drains to the CCWS hold-up tank. The drains to the tank consist of shell side drains from the heat exchangers (seal water, letdown, excess letdown, RHR), drains from the CCW surge tank, CCW pumps, CCW chemical addition tank, and recycle evaporator package.

The CCWS drain tank pump operation is automatically initiated on high drain level. Interlocks prevent start up of the drain tank pump when the drain tank level is low or when the surge tank level is high as indicated by LS-6411 and LS-676A respectively.

The CCW hold-up tank is provided in the FHB to collect CCW from piping and equipment being drained. The drains to the hold-up tank consist of the shell side drains of the fuel pool heat exchangers and a drain from the CCWS surge tank. Drainage flows to the drain tank by gravity. One CCWS hold-up tank pump is provided to pump drainage flow into the CCWS surge tank.

4.2 Normal Operation (continued)

The hold-up tank is sampled prior to pumpdown to determine that water chemistry specifications are met for return to the surge tank. Off specification water is drained to the Waste Processing drainage systems.

The CCWS hold-up tank pump operation is manually initiated on "Hi" hold-up tank level. Interlocks prevent start up of the hold-up tank pump when the hold-up tank level is "Lo" or the surge tank level is high as indicated by LS-6415 and LS-676A respectively.

4.3 Shutdown Operation

Plant shutdown is defined as the operations that bring the reactor plant from normal operating temperature and pressure to cold shutdown for maintenance or refueling.

When the reactor coolant temperature and pressure are reduced to less than 350°F and to less than 425 psig, the Residual Heat Removal System operation is initiated. The standby component cooling heat exchanger and pump are placed in operation. Component cooling water flow is initiated and both residual heat exchangers of the Residual Heat Removal System are placed in operation. At this time, only one spent fuel pool heat exchanger may be supplied by the CCW system or the design capacity of the CCW system may be exceeded.

The rate of heat removal from the reactor coolant is controlled by regulating the reactor coolant flow rate through the residual heat exchangers and the spent fuel pool heat load. The cool down rate is limited by the allowable cooling rate based on stress limits of the reactor vessel and steam generator, and the limits set on the operating temperature of the Component Cooling Water System by other components using the system. During the cooldown period, the cooling water inlet temperature to the various components is permitted to increase to 120°F. The 120°F limit is to protect the RCP seals. Each CCW heat exchanger is designed to remove one-half of the heat removal load during the period of reducing the reactor coolant temperature from 350°F to 140°F.

During a cold shutdown condition, residual heat from the reactor core is removed by the Component Cooling Water and Residual Heat Removal Systems. The number of pumps and heat exchangers in service varies depending upon the residual heat removal load, the spent fuel pool load, and the operations in progress in the Boron Recycle System.

4.4 Post-Accident Operation

During the injection phase following a LOCA, the component cooling water pumps receive a Safety Injection ("S") signal to ensure that at least one pump is started and cooling flow is supplied to the safeguards pumps.

4.4 Post-Accident Operation (continued)

The Safety Injection ("S") signal will also isolate the CCW supply to certain components in the CCWS. These components include:

1. The Gross Failed Fuel detector is isolated by Valves 1CC-304 and 1CC-305 stroking closed.

2. The sample system heat exchangers are isolated by Valves 1CC-114 and 1CC-115 stroking closed.

A Containment Isolation Phase "A" ("T") signal will isolate the following valves:

1. The excess letdown heat exchanger and reactor coolant drain tank heat exchanger are isolated by Valves 1CC-176 and 1CC-202 stroking closed.

A Containment Isolation Phase "B" ("P") isolation signal will isolate other components in the CCWS. These components include:

1. The CCW water inlet header to the RCP's is isolated by Valves 1CC-207 and 1CC-208 stroking closed.

2. The CCW water outlet header from the RCP lower bearings and thermal barriers are isolated by Valves 1CC-249 and 1CC-251 stroking closed.

3. The CCW outlet header from the RCP bearing oil coolers are isolated by Valves 1CC-297 and 1CC-299 stroking closed.

As the Safety Injection System is switched over to the recirculation phase, special preparations have to be made in the CCWS. This system is designed to be operable with a single active or passive failure during the recirculation phase. Therefore, the system must be separated into two parts, each of which can function independently and remove the residual heat from the recirculated sump water.

The separation of the system is accomplished automatically by closing either the A or B Train motor operated cross connects on the suction and discharge headers. The Motor Operated Cross Connect Valves are; 1CC-128 and 1CC-99 on the suction and discharge headers of CCW Pump 1A and Valves 1CC-127 and 1CC-113 on the suction and discharge headers of CCW Pump 1B. This ensures cooling is maintained to the non-essential loop and the system meets single failure criteria for the safety trains. In the event of a passive failure in the system, only one half of the system will be affected and the second half will remain operational. In the case of an active failure of one of the pumps, the valves in the suction header and in the discharge header can be repositioned to align the spare CCW Pump 1C with the affected half of the system.

4.5 Operation with Diesel Generator

The CCWS is electrically connected to the emergency diesel generator bus. When normal power is lost, the diesel provides power.

4.6 Limiting Conditions for Operation

The following is a transcription of the limiting condition for operation (LCO) which directly deals with the CCW system. For the exact wording, action statements, and surveillance requirements associated with the LCO, obtain a controlled copy of the Technical Specifications.

4.6.1 SHNPP Technical Specifications Section 3.7.3 (Modes 1, 2, 3, and 4)

At least two component cooling water pumps, heat exchangers, and essential flow paths shall be OPERABLE.

4.7 Leak Detection

Component cooling water flow will be continuously monitored by flow and temperature instrumentation placed in the return line from each major user. This instrumentation is listed in Table 6.1. A pipe break upstream of a flow instrument will be indicated by a low flow and/or high temperature measurements; a pipe break downstream will be indicated by a high flow measurement. The abnormal temperature and/or flow will be annunciated in the Control Room by appropriate alarms. This will alert the operator to the existence of abnormal conditions in the CCWS. The high and low flow and high temperature readings, when used with the flow diagrams, will enable the operator to rapidly locate the leak and determine what valve or valves will isolate it. Remotely operated valves will be closed from the Control Room. All others will be manually closed at the valve location. In some cases it might be necessary to shut down the entire loop in order to isolate the break. Small leaks, not annunciated by Control Room alarms, will be detected by periodic inspection of the system piping, valves, and surge tank level.

A cooling water temperature increase of about 250°F would be required to overfill the component cooling surge tank. However, should a large tube-side-to-shell-side leak develop in the residual heat exchanger, the water level in the component cooling surge tank would rise and the operator would be alerted by a high level alarm. Overflow is directed to a CCW floor drain.

The severance of a cooling line serving an individual Reactor Coolant Pump would result in leakage of component cooling water. However, the piping is small as compared to piping located in the missile protected area of the containment. Therefore, the water stored in the surge tank after a low level alarm, together with makeup flow, will provide ample time for the closure of the valves external to the containment to isolate the leak before cooling is lost to other components in the Component Cooling Water System.

4.7 Leak Detection (continued)

Indication of any leakage into or out of the CCWS will be provided by level indication in the surge tank. Although only one surge tank is utilized, a baffle plate separates the tank into two halves. Each half of the tank is connected to one of the separate, redundant component cooling loops. Large makeup requirements in either half of the tank, which will be detected by frequent makeup operations and appropriate makeup flow measuring instrumentation, provide additional indication of a leak in one of the redundant loops. The baffle plate also prevents water shortage in one CCWS loop due to a large break in the other loop.

By providing these redundant means of determining system leakage, the operator is assured of early detection of major leakage or failure. The failure of any single Component Cooling Water System component will not affect the capability of the system to provide the heat removal necessary for safe shutdown.

The component cooling water could become contaminated with radioactive water due to a leak in any heat exchanger tube in the Chemical and Volume Control, Sampling, Residual Heat Removal, Reactor Coolant Drain Tank, Spent Fuel Pool Cooling and Cleanup, or the Waste Processing Systems; or a leak in a Reactor Coolant Pump thermal barrier cooling coil. Tube or coil leaks in these components being cooled would be detected by the radiation monitors located in CCWS headers. Also, component cooling water could leak out into the seal water, letdown, and excess letdown systems. Service water could leak into CCW through the CCW heat exchangers.

The time required to locate and isolate a leak and the actual quantity of water lost as a result depends on the following factors: 1) the size and location of the leak; 2) whether the valve is manual or remotely operated; and 3) (for manual valves only) the location of the valve. However, the maximum quantity of water that can be lost is 2,000 gallons. The includes the capacity of one-half of the baffled surge tank.

4.8 Operational Experience

The thermal relief valves on the components which are serviced by CCW discharge to drains if they are called upon to lift. When this occurs, CCW inventory is lost and CCW System operability is challenged. There were at least two occurrences in 1991 where CCW thermal relief valves had lifted when the standby CCW Pump was started and consequently some inventory was lost.

The over pressurization of the CCW System was evaluated and attributed to a reduced system flow align concurrent with a start of the standby CCW Pump which caused a momentary pressure surge. This over pressure condition could potentially occur during SI actuation causing unavailability of CCW for accident mitigation. This concern was addressed by PCR's 5741 and 5748.

4.8 Operational Experience (continued)

PCR-5741 upgraded the design pressure of the Reactor Coolant Drain Tank Heat Exchanger and Excess Letdown Heat Exchanger including an envelope of piping encompassing the inlet and outlet isolation valves. The thermal relief valves were reset to 190 psi, well above the maximum expected pressure of approximately 160 psi as verified by Acceptance Test EPT-031T.

PCR-5748 replaced all thermal relief valves on the components located outside Containment Building with a combination locked open valve, check valve, and flow orifice. This arrangement eliminated the potential for an inadvertent thermal relief valve actuation while providing thermal protection for each component.

5.0 INTERFACE SYSTEMS

5.1 Systems Required for Support

Makeup to the CCWS surge tank is normally obtained from the Demineralized Water Storage Tank (DWS) by remote manual operation of Valve 1DW-15. The operator is informed of the need for makeup by a low level alarm from each surge tank compartment. Pumps in the DWS are used to transfer makeup water to the CCWS. An emergency supply of makeup water is obtained from the Primary Makeup System whenever the DWS is unavailable.

The Service Water System provides the cooling water for the CCW heat exchangers.

The Radiation Monitoring System provides monitors on the discharge line from CCW Pump 1A-SA and 1B-SB.

6.0 TABLES

6.1 Instrumentation for Flow Balance and Leak Detection

Table 6.1

Instrumentation for Flow Balance and Leak Detection

Instrument Number	Range	Location	Function
FE-646	0-10 gpm	Discharge of RHR Pump Cooler 1A	Annunciates low CCW flow on MCB.
FE-647	0-10 gpm	Discharge of RHR Pump Cooler 1B	Annunciates low CCW flow on MCB.
FE-648A(b)(c)	0-50 gpm	Discharge of RCP 1A(B)(C) Thermal Barrier	Local indication used to establish flow rate.
FE-651	0-200 gpm	Discharge of RCP 1A Upper Bearing Cooler	Annunciates high/low CCW flow on MCB.
FE-654	0-200 gpm	Discharge of RCP 1B Upper Bearing Cooler	Annunciates high/low CCW flow on MCB.
FE-657	0-200 gpm	Discharge of RCP 1C Upper Bearing Cooler	Annunciates high/low CCW flow on MCB.
FE-652	0-15000 gpm	Discharge of CCW Heat Exchanger 1A	Visual indication on MCB/ACP. Annunciates high CCW flow on MCB.
FE-653	0-15000 gpm	Discharge of CCW Heat Exchanger 1B	Visual indication on MCB/ACP. Annunciates high CCW flow on MCB.
FE-659A(B)(C)	0-25 gpm	Discharge of RCP 1A(B)(C) Lower Bearing Cooler	Local indication used to establish flow rate.
FE-660A(B)	0-1200 gpm	Inlet To and Discharge From the Boron Recycle Evaporator Package	Annunciates high/low CCW flow on MCB.
FE-663A	0-50 gpm	Discharge of Boron Recycle Vent Condenser	Local indication used to establish flow rate.
FE-682	0-300 gpm	Discharge of Excess Letdown Heat Exchanger	Annunciates high/low CCW flow on MCB.
FE-696	0-300 gpm	Discharge of Reactor Coolant Drain Tank Heat Exchanger	Annunciates high/low CCW flow on MCB.

Table 6.1

Instrumentation for Flow Balance and Leak Detection

Instrument Number	Range	Location	Function
FE-693	0-25 gpm	Discharge of Gross Failed Fuel Detector	Local indication used to establish flow rate.
FE-688	0-7000 gpm	Discharge of RHR Heat Exchanger 1A	Visual indication on MCB/ACP. Annunciates high/low CCW flow on MCB/ACP.
FE-689	00-7000 gpm	Discharge of RHR Heat Exchanger 1B	Visual indication on MCB/ACP. Annunciates high/low CCW flow on MCB/ACP.
TIS-658A(B)	50-200 DEGF	Discharge of RHR Heat Exchanger 1A (1B)	Annunciates high CCW temperature on MCB/ACP.
TE-671	0-200 DEGF	Discharge of CCW Pump 1A	Visual indication on MCB. Annunciates high CCW temperature on MCB.
TE-672	0-2000 DEGF	Discharge of CCW Pump 1B	Visual indication on MCB. Annunciates high CCW temperature on MCB.
TE-674	0-200 DEGF	Discharge of CCW Heat Exchanger 1A	Visual indication on MCB/ACP. Annunciates high CCW temperature on MCB/ACP.
TE-675	0-200 DEGF	Discharge of CCW Heat Exchanger 1B	Visual indication on MCB/ACP. Annunciates high CCW temperature on MCB/ACP.
TIS-684	50-200 DEGF	Discharge of RCP Thermal Barriers	Annunciates high CCW temperature on MCB.
TIS-686	50-200 DEGF	Discharge of RCP Bearing Coolers	Annunciates high CCW temperature on MCB.

7.0 FIGURES

Figure 7.1 - Component Cooling Water System

Figure 7.2 - Component Cooling Water RHR Essential Loop

Figure 7.3 - Component Cooling Water RAB Non-Essential Loop

Figure 7.4 - CCW Containment Non-Essential Loop

Figure 7.5 - Component Cooling Water Drain System

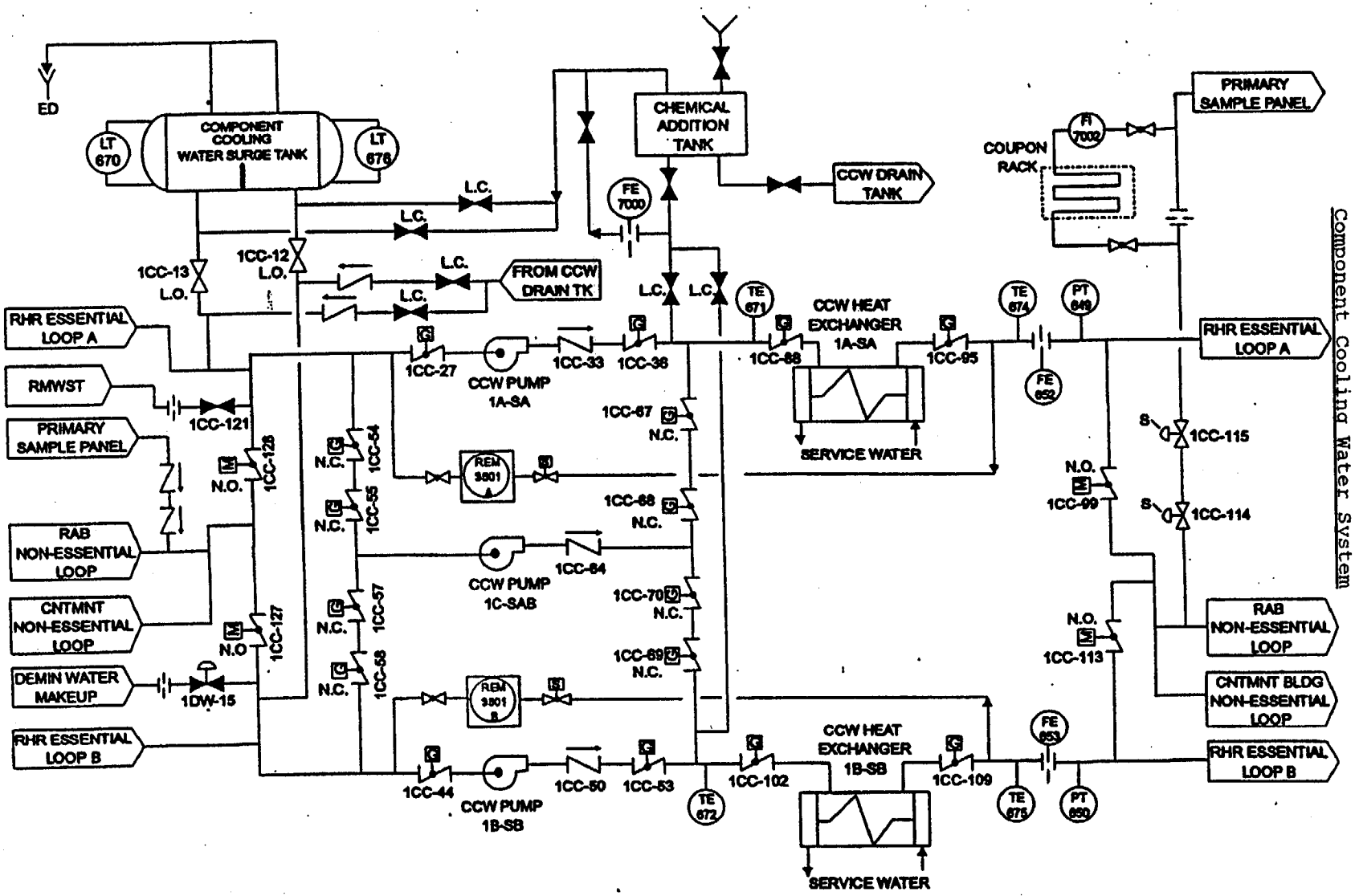

Component Cooling Water System

Figure 7.1

Figure 7.2

Component Cooling Water RHR Essential Loop

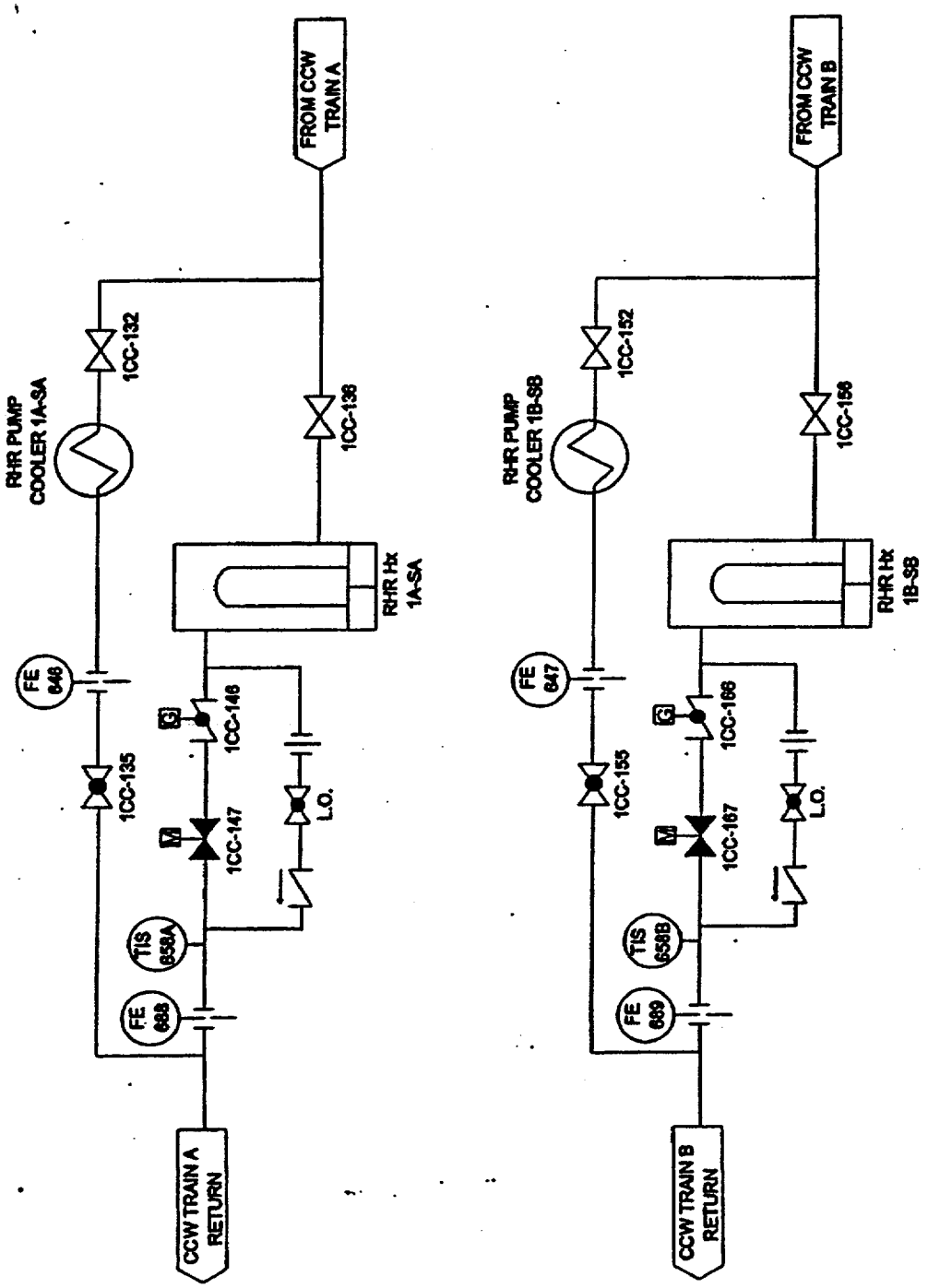

Figure 7.3

Component Cooling Water RAB Non-Essential Loop

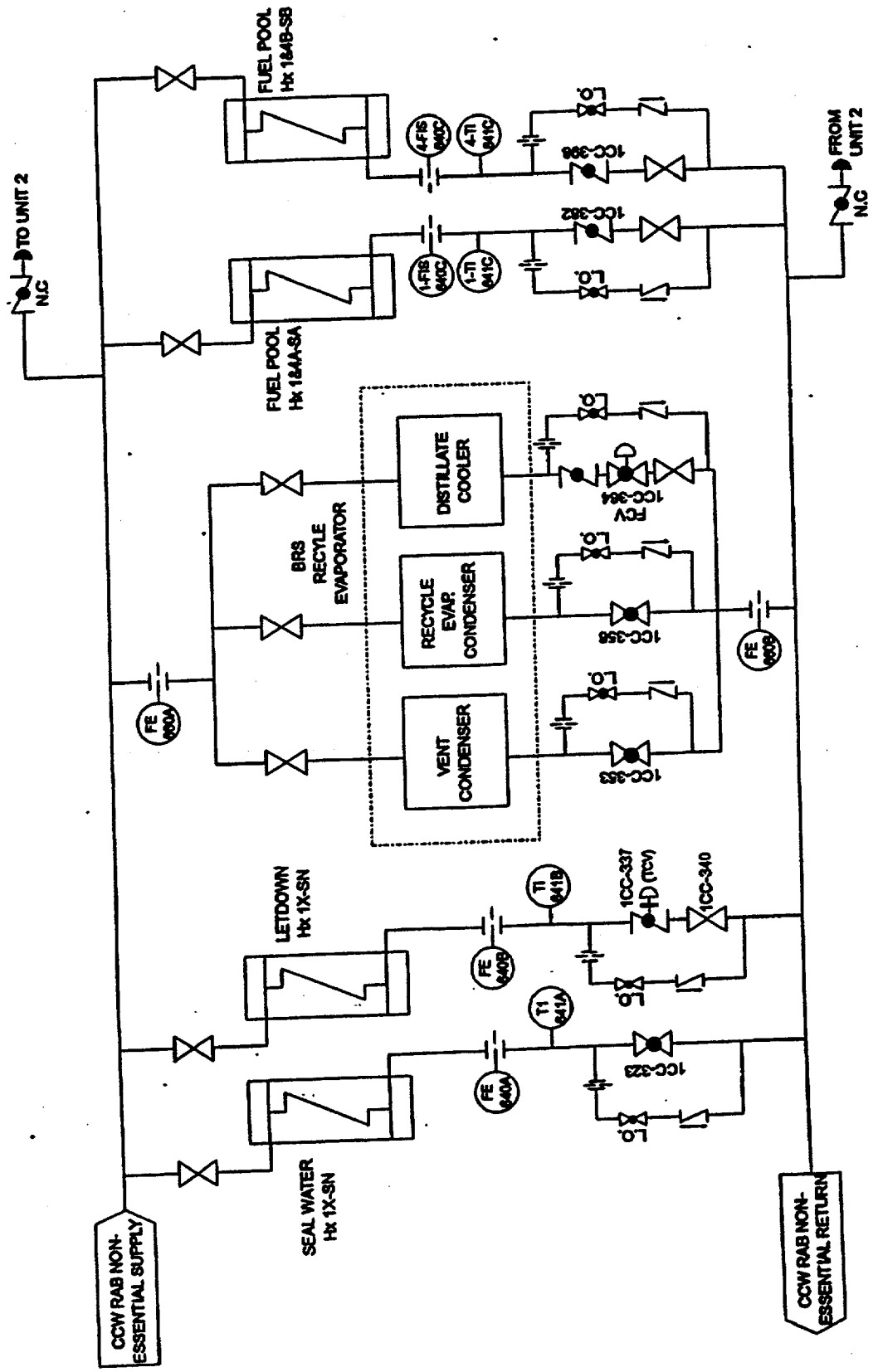

Figure 7.4

CCW Containment Non-Essential Loop

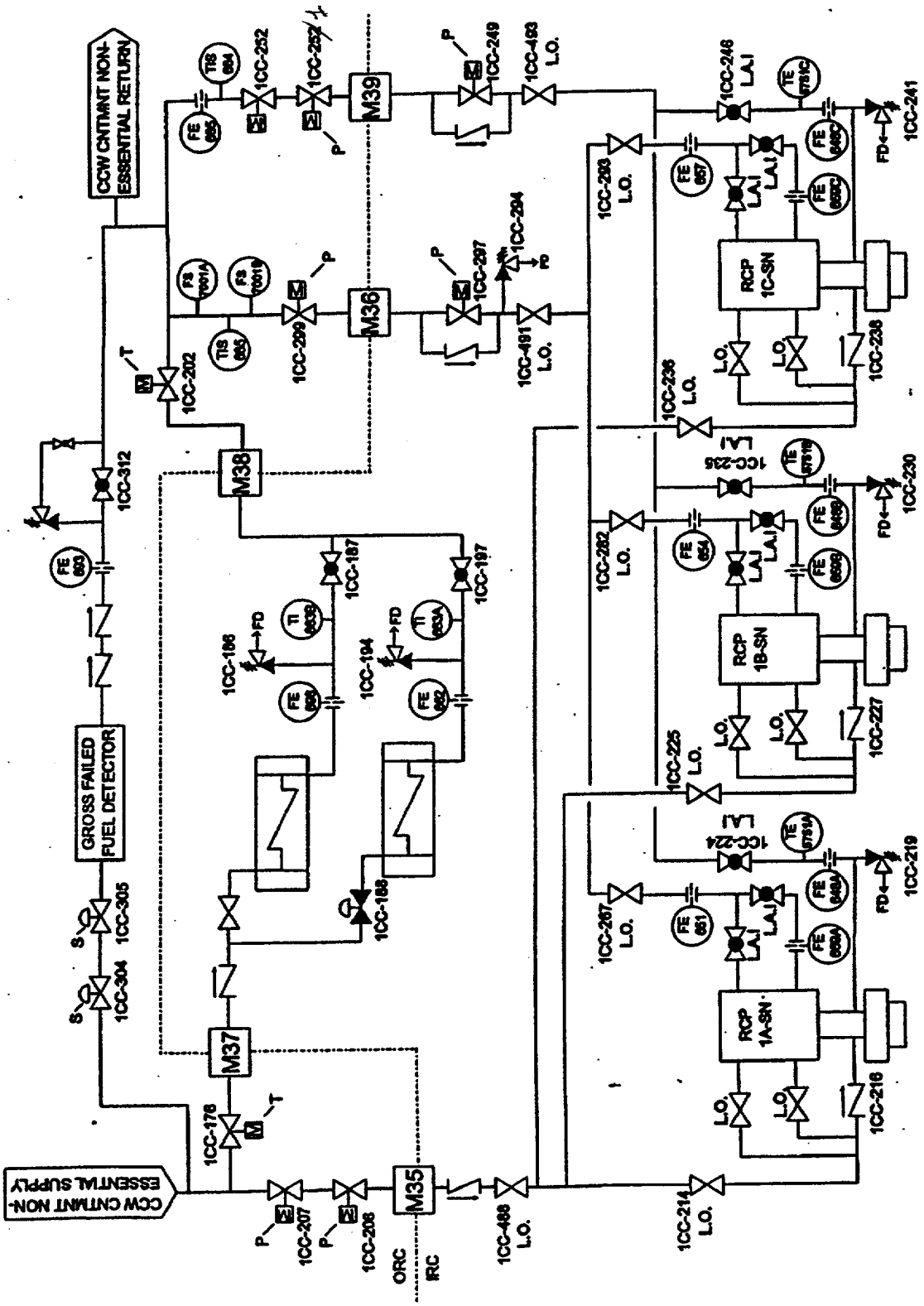

Figure 7.5

Component Cooling Water Drain System

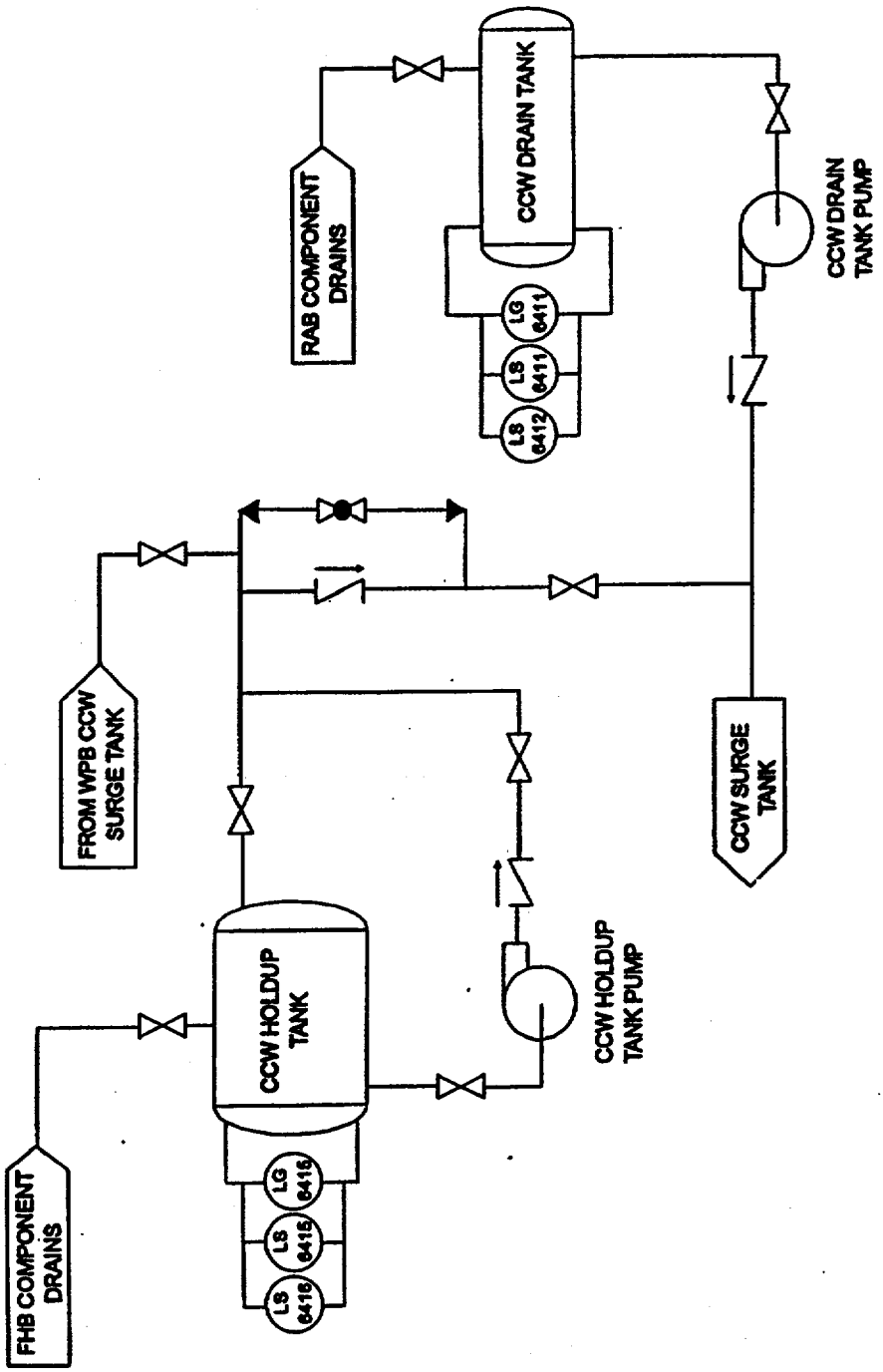

8.0 REFERENCES

8.1 Drawings

8.1.1 Flow Diagrams

CAR-2165-G-184 Flow Diagram Reactor Auxiliary Building Drainage Systems, Unit 1

CAR-2165-G-187 Flow Diagram Fuel Handling Building Draining Systems, Units 1, 2, 3, and 4

CAR-2165-G-819 Flow Diagram Component Cooling Water System, Sheet 1, Unit 1

CAR-2165-G-820 Flow Diagram Component Cooling Water System, Sheet 2, Unit 1

CAR-2165-G-821 Flow Diagram Component Cooling Water System, Sheet 3, Unit 1

CAR-2165-G-822 Flow Diagram Component Cooling Water System, Sheet 4, Unit 1

8.1.2 Simplified Flow Diagrams

CPL-2165-S-1319 Component Cooling Water System, Sheet 1, Unit 1

CPL-2165-S-1320 Component Cooling Water System, Sheet 2, Unit 1

CPL-2165-S-1321 Component Cooling Water System, Sheet 3, Unit 1

CPL-2165-S-1322 Component Cooling Water System, Sheet 4, Unit 1

8.1.3 Control Wiring Diagrams

CAR-2166-B-401 Sheet 940, Component Cooling Pumps Annunciation

CAR-2166-B-401 Sheet 941, Component Cooling Pump 1A-SA

CAR-2166-B-401 Sheet 942, Component Cooling Pump 1B-SB

CAR-2166-B-401 Sheet 943, Component Cooling Pump 1C-SAB Sheet 1

CAR-2166-B-401 Sheet 944, Component Cooling Pump 1C-SAB Sheet 2

CAR-2166-B-401 Sheet 946, CVCS Letdown Heat Exchanger Cooling Water Outlet Valve 1-TCV-144

CAR-2166-B-401 Sheet 947, RCP Thermal Barrier Isolation Valve 1-FCV-685

CAR-2166-B-401 Sheet 948, CCS Non-essential Return Isolation Valve 1-9370

8.1.3 Control Wiring Diagrams (continued)

CAR-2166-B-401 Sheet 949, CCS Non-essential Return Isolation Valve 1-9371

CAR-2166-B-401 Sheet 950, CCS Non-essential Return Isolation Valve 1-9384

CAR-2166-B-401 Sheet 951, CCS Non-essential Supply Isolation Valve 1-9385

CAR-2166-B-401 Sheet 952, RHRS Cooling Water Isolation Valve 1-9431A

CAR-2166-B-401 Sheet 953, RHRS Cooling Water Isolation Valve 1-9431B

CAR-2166-B-401 Sheet 954, CVCS Excess Letdown Heat Exchanger Isolation Valve 1-9471

CAR-2166-B-401 Sheet 955, RCP Component Cooling Water Supply Isolation Valve 1-9480A

CAR-2166-B-401 Sheet 956, RCP Component Cooling Water Supply Isolation Valve 1-9480B

CAR-2166-B-401 Sheet 957, RCP Oil Heat Exchanger Containment Isolation Valve 1-9481

CAR-2166-B-401 Sheet 958, RCP Oil Heat Exchanger Containment Isolation Valve 1-9482

CAR-2166-B-401 Sheet 959, RCP Thermal Barrier Containment Isolation Valve 1-9483

CAR-2166-B-401 Sheet 960, CVCS Auxiliary Heat Exchanger Containment Isolation Valve 1-9485

CAR-2166-B-401 Sheet 961, CVCS Auxiliary Heat Exchanger Containment Isolation Valve 1-9486

CAR-2166-B-401 Sheet 962, RCP Thermal Barrier Containment Isolation Valve 1-9484

CAR-2166-B-401 Sheet 963, Demineralized Water Makeup to CCWS Valve 1-9357

CAR-2166-B-401 Sheet 965, CCW to Gross Failed Fuel Detector Isolation Valve 1-LCV-670

CAR-2166-B-401 Sheet 966, CCW to Gross Failed Fuel Detector Isolation Valve 1-LCV-676

8.1.3 Control Wiring Diagrams (continued)

CAR-2166-B-401 Sheet 967, Component Cooling Surge Tank Level Instrumentation

CAR-2166-B-401 Sheet 968, Component Cooling Heat Exchangers 1A-1B Discharge Temperature Instrumentation

CAR-2166-B-401 Sheet 969, Component Cooling Heat Exchangers 1A-1B Discharge Temperature Instrumentation

CAR-2166-B-401 Sheet 970, Component Cooling System Control Instrumentation

CAR-2166-B-401 Sheet 971, Residual Heat Exchangers Cooling Water Outlet Flow Temperature Instrumentation

CAR-2166-B-401 Sheet 972, Component Cooling Water to Sample Heat Exchangers Isolation Valve 3CC-0547SA-1

CAR-2166-B-401 Sheet 973, Component Cooling Water to Sample Heat Exchangers Isolation Valve 3CC-0548SB-1

CAR-2166-B-401 Sheet 974, CCW Flow Thru Heat Exchanger and RHR PP's Annunciation

CAR-2166-B-401 Sheet 2471, Component Cooling Water Hold-up Tank Transfer Pump 1-4X-NNS

CAR-2166-B-401 Sheet 2472, Component Cooling Water Drain Tank Transfer Pump 1X-NNS

8.1.4 Foreign Prints

Westinghouse Drawing Number 1095E67, Component Cooling System Flow Diagram, Sheet 1 of 5

Westinghouse Drawing Number 1095E67, Component Cooling System Flow Diagram, Sheet 2 of 5

Westinghouse Drawing Number 1095E67, Component Cooling System Flow Diagram, Sheet 3 of 5

Westinghouse Drawing Number 1095E67, Component Cooling Water Flow Diagram, Sheet 4 of 5

Westinghouse Drawing Number 1095E67, Component Cooling Water Flow Diagram, Sheet 5 of 5

8.1.5 General Plans

CAR-2165-G-901, Plant General Arrangement, Plant Elevation 190.00, 211.00, 216.00, and 221.00 Unit 1

CAR-2165-G-902, Plant General Arrangement, Plant Elevation 236.00 and 240.00 Unit 1

CAR-2165-G-905, Plant General Arrangement, Plant Elevation 305.00 and 314.00 Unit 1

8.1.6 Manufacturer Drawings (EMDRAC)

PO Number	Vendor	Equipment
NY435181	Goulds Pumps, Inc.	Miscellaneous Centrifugal Pumps

Ebasco Drawing Number	Drawing Number	Manufacturer Functional Title
1364-		
7999	MSC-1002/CHR/WT	Mech Seal - CCW Drain Tank Pump
8001	MSC-1002	Mech Seal - CCW Transfer Tank Pump
8274	C784886N02	Comp Cool Wtr Trans Pump Cross Secto and Bill of Material
8275	C784886N01	Component Cooling Wtr Transfer Pump O/L FHB Elevation 216
8286	5633005	CCW Trans Pump Motor Oil 4SJ and COV
11064	C784882N01	Component Cool Wtr Drain Tank Pump Oil RAB Elevation 2
13841	C784882N02	CCW Drain Tank Pump Cross Sect and Bill of Material
16351	C7848886	CCW Transfer Pump Test Log
163352	A-25754	CCW Transfer Pump Perf Test Curve
23814	A-26108/7806JH	CCW Drain Tank Pump Perf Curve and TL - FINAL

8.1.6 Manufacturer Drawings (EMDRAC) (continued)

PO Number	Vendor	Equipment
435107	Hemminger Company	Miscellaneous Shop Fabricated Tank

Ebasco Drawing Number	Drawing Number	Manufacturer Functional Title
3670	591-15	Component Cooling Water Hold-up Tank FHB Elevation 216
3673	591-14	Component Cooling Water Drain Tank RAB

	Vendor
	Westinghouse

Ebasco Drawing Number	Drawing Number	Manufacturer Functional Title
20507, 2368	FC-49864	Component Cooling Water Pump Outline
21010, 2441	4617056/SH1	Component Cooling Water Heat Exchanger Outline
21500, 2322	1188E02	Component Cooling Water Surge Tank Units 1-44, Sheet 1 and 2

8.2 Specifications

Specification M-12, Miscellaneous Pumps

Specification AS-12, Miscellaneous Shop Fabricated Tanks

Technical Specification 3/4.7.3, 3/4.6.3

8.3 Technical Manuals

IQW Goulds Pumps Inc., Miscellaneous Pumps, S.O. 181

MED Crane Chempump, Miscellaneous Pumps, S.O. 205

MBY Westinghouse, 15 GPM Boron Recycle Evaporator, S.O. 232

ISP Pacific Pumps, CCW Pump, S.O. 205

MJB Westinghouse Heat Exchangers

8.4 Others

Shearon Harris Nuclear Power Plant Instrument List

CAR-2166-B-432

SHNP FSAR Chapter 9.2.2

CAROLINA POWER & LIGHT COMPANY

SHEARON HARRIS NUCLEAR POWER PLANT

PLANT OPERATING MANUAL

VOLUME 6

PART 2

PROCEDURE TYPE: System Description (SD)

NUMBER: SD-170

TITLE: Fuel Handling Building HVAC System

REVISION 6

RECEIVED
OCT 0 1 1998
HNP
DOCUMENT CONTROL

A/7

Table of Contents

Section		Page
1.0	SYSTEM PURPOSE	6
2.0	SYSTEM FUNCTION	6
2.1	Normal Operating Floor Air Conditioning System	6
2.2	Emergency Exhaust System	7
2.3	Normal Ventilation System Below Operating Floor	7
2.4	SFP Pump Room Ventilation System	8
3.0	COMPONENTS	8
3.1	Normal Operating Floor Air Conditioning System	8
3.1.1	Air Handling Units	8
3.1.1.1	Fans	9
3.1.1.2	Motors	9
3.1.1.3	Electric Heating Coils	9
3.1.1.4	Cooling Coils	9
3.1.1.5	Medium Efficiency Filter Units	9
3.1.2	Exhaust Fans	9
3.1.3	Exhaust Fan Motors	10
3.1.4	Dampers	10
3.1.5	Flow Sensors	10
3.1.6	Flow Indicating Switches	10
3.1.7	Flow Switch	11
3.1.8	Temperature Sensors	11
3.1.9	Moisture Sensors	11
3.1.10	Control Switches	11
3.2	Emergency Exhaust System	11
3.2.1	Air Cleaning Units	11
3.2.1.1	Demisters	12
3.2.1.2	Electric Heating Coils	12
3.2.1.3	Pre-filters	12
3.2.1.4	HEPA Filters	12
3.2.1.5	Charcoal Adsorbers	13
3.2.1.6	Temperature Detection Units	13
3.2.2	Exhaust Fans	13
3.2.3	Exhaust Fan Motors	13

Table of Contents
(continued)

Section		Page
	3.2.4 Butterfly Valves	13
	3.2.5 Flow Switches	13
	3.2.6 Temperature Sensors	14
	3.2.7 Moisture Sensors	14
	3.2.8 Pressure Differential Switches	14
	3.2.9 Local Indicators	14
	3.2.10 Control Switches	14
3.3	Normal Ventilation System Below the Operating Floor	14
	3.3.1 Air Handling Units	14
	3.3.1.1 Fans	15
	3.3.1.2 Motors	15
	3.3.1.3 Electric Heating Coils	15
	3.3.1.4 Medium Efficiency Filter Units	15
	3.3.1.5 Dampers	15
	3.3.2 Exhaust Fans	15
	3.3.2.1 Exhaust Fan Motors	16
	3.3.2.2 Electric Heating Coil	16
	3.3.2.3 Electric Unit Heater	16
	3.3.3 Dampers	16
	3.3.4 Louvers	16
	3.3.5 Flow Sensors	16
	3.3.6 Temperature Sensors	17
	3.3.7 Control Switches	17
3.4	Spent Fuel Pool Pump Room Ventilation System	17
	3.4.1 Air Handling Units	17
	3.4.1.1 Fans	17
	3.4.1.2 Motors	17
	3.4.1.3 Cooling Coils	17
	3.4.1.4 Medium Efficiency Filter Units	17
	3.4.2 Flow Sensors	18
	3.4.3 Temperature Sensors	18
	3.4.4 Control Switches	18

Table of Contents
(continued)

Section		Page
4.0	OPERATIONS	18
4.1	Normal Operating Floor HVAC System	18
4.1.1	Normal Supply System	18
4.1.2	Normal Exhaust System	20
4.1.3	FHB Cask Decontamination Exhaust System	21
4.1.4	Clothing Change Area Ventilation System	22
4.2	Emergency Exhaust System	22
4.3	Normal Ventilation System Below the Operating Floor	23
4.3.1	Normal Ventilation Supply System	23
4.3.2	Normal Ventilation Exhaust System	24
4.3.3	HVAC Equipment Room Ventilation System	25
4.4	Spent Fuel Pool Pump Room Ventilation System	26
4.5	Limiting Conditions for Operation	27
4.5.1	Technical Specification 3.9.12	27
5.0	INTERFACE SYSTEMS	28
5.1	Systems Required for Support	28
5.2	System-to-System Crossties	28
6.0	TABLES	28
6.1	Control Switches	29
6.2	FHB HVAC Alarms	30
6.3	Time Delay Relays	32
7.0	FIGURES	33
7.1	Normal Operating Floor HVAC System	34
7.2	FHB Operating Floor Emergency Exhaust System	35
7.3	Ventilation System Below Operating Floor	36
7.4	Spent Fuel Pool Pump Room Ventilation System	37
7.5	FHB HVAC AEP-1 Controls	38
7.6	FHB HVAC AEP-2 Controls	39
8.0	REFERENCES	40
8.1	Drawings	40

Table of Contents
(continued)

Section		Page
8.2	Specifications	50
8.3	Technical Manuals	50
8.4	System Design Basis Document	51
8.5	Miscellaneous	51

1.0 SYSTEM PURPOSE

The purpose of the Fuel Handling HVAC System is to maintain an operating floor environment suitable for personnel comfort and safety, to minimize operator exposure due to SFP (Spent Fuel Pool) water evaporation, to isolate the operating floor in the event of an accidental release of radioactive material, and to provide cooling for operating equipment and ventilation for areas below the operating floor.

2.0 SYSTEM FUNCTION

The Fuel Handling Building HVAC System consists of the following systems: Normal Operating Floor Air Conditioning, Emergency Exhaust, Normal Ventilation Below Operating Floor, and Spent Fuel Pool Pump Room Ventilation.

2.1 Normal Operating Floor Air Conditioning System

The Normal Operating Floor Air Conditioning (A/C) System is a once through type, consisting of a supply system and an exhaust system. It is designed to maintain a temperature between 60°F and 80°F for areas between the operating floor and 10 feet above the floor and to maintain the temperature above these areas below 104°F. It is also to provide ventilation for the Spent Fuel Pool (SFP) areas and to direct air from areas of low potential radioactivity to areas of higher potential radioactivity. This system is not safety-related and is not required to operate during a design basis accident (DBA). The isolation dampers located in the common supply and exhaust ducts penetrating from the RAB to the FHB are designed to meet the Safety Class 3 and Seismic Category 1 requirements, and the exhaust ducts above the fuel pools are seismically supported. See Figure 7.1 for the flow path.

During the cask decontamination process, air is transferred to the decontamination enclosure and exhausted by a separate exhaust fan (E-84) that is connected to the normal exhaust system. dampers are provided to isolate the decontamination enclosure during periods when decontamination is not in progress.

The clothing change area in the decontamination storage pit is ventilated by air that is drawn through a door louver and is removed by an exhaust fan (E-43).

The Normal Operating Floor A/C supply system consists of four air handling units (AH-56, 57, 58, 59). Each unit includes, in the direction of air flow, an outside air intake louver, a supply isolation damper, a medium efficiency filter, an electric heating coil, a chilled water cooling coil, an electric reheat coil, a centrifugal fan, and a discharge isolation damper. Outside air is drawn through the unit and is supplied to the operating floor area through a duct distribution system. Normally, all fans are operating. Water for the cooling coils is supplied by the Non-essential Services Chilled Water system (SD-147).

The Normal Operating Floor A/C exhaust system consists of four units (E-23, 24, 25, 26). Each unit includes a supply isolation damper, a centrifugal fan, and a discharge isolation damper. Normally all four fans are operating.

2.2 Emergency Exhaust System

The Emergency Exhaust System serves to limit the radiological release to the atmosphere following a fuel handling accident. Receipt of a high radiation signal from any one of 24 radiation detectors located on 286' Elevation in the FHB along side the Fuel Pools shuts down the normal operating floor A/C system and activates the Emergency Exhaust System. The Emergency Exhaust System filters and exhausts to the atmosphere the air from the operating floor. The isolation dampers located in the common supply and exhaust ducts close, isolating the FHB operating floor. This system also establishes and maintains, int his area, a 1/4 in.wg. negative pressure to prevent outleakage. It meets the Safety Class 3 and Seismic Category 1 requirements. See Figure 7.2 for the flow path.

The Emergency Exhaust System consists of two 100 percent capacity fan and filter subsystems (E-12, E-13). Each of the two subsystem filter trains includes a manual locked open supply valve, a demister, an electric heating coil, a medium efficiency filter, a HEPA pre-filter, a charcoal adsorber, and a HEPA after-filter. Connected to each subsystem outlet is a centrifugal fan with a motor operated supply valve to prevent reverse air flow through the inactive fan. R6

2.3 Normal Ventilation System Below Operating Floor

The Normal Ventilation System Below Operating floor is a once through type, consisting of two supply systems and two exhaust systems. It provides ventilation for areas below the operating floor and directs air flow from areas of low potential radioactivity to areas of higher potential radioactivity. This system is not safety-related, except for the isolation dampers located int he loading area supply a;nd exhaust ducts. In the event of a fuel handling accident, the isolation dampers will close, isolating the loading area. These dampers meet the Safety Class 3 and Seismic Category 1 requirements. Following a fuel handling accident, the normal ventilation below operating floor will continue to function. Upon a loss of power, it will shut down. See Figure 7.3 for the flow path.

In addition to the above, the north H&V equipment room is served by an electric unit heater, an exhaust fan, a motor-operated inlet louver, and a motor-operated outlet louver.

2.3 Normal Ventilation System Below Operating Floor (continued)

The normal supply system (north) serves the northern half of the areas below the operating floor, and the normal supply system (south) serves the southern half of the areas below the operating floor. Each supply system consists of two parallel, 100 percent capacity fans (AH-22A, B and AH-21A, B; one operating and one on standby). Each fan is provided with pneumatic supply and discharge dampers to prevent air recirculation through the idle fan. Each pair of supply fan inlets is connected to a common plenum. Air is drawn from outside (through and air intake louver, a damper, a medium efficiency filter, and an electric heating coil) and supplied to spaces below the operating floor.

The normal exhaust system (north) and the normal exhaust system (south) each consist of two parallel, 100 percent capacity fans (E-11A, B and E-14A, B; one operating and one on standby). Each exhaust fan is provided with pneumatic supply and discharge dampers to prevent air recirculation through the idle fan. Each pair of exhaust fans is connected to a common supply duct and a common exhaust duct.

2.4 SFP Pump Room Ventilation System

The SFP Pump Room Ventilation System operates in a recirculation mode and provides cooling for operating equipment. This system meets the Safety Class 3 and Seismic Category 1 requirements. See Figure 7.4 for the flow path.

The SFP Pump Room Ventilation System consists of two 100 percent capacity air handling units (AH-17A, B; one operating and one on standby). Each air handling unit includes, in the direction of flow, a medium efficiency filter, a chilled water cooling coil, and a centrifugal fan. The chilled water for the cooling coils is provided by the Essential Services Chilled Water System (SD-148).

CAUTION

Setpoints given in this SD are for reference only. Actual values should be obtained from a controlled setpoint document.

3.0 COMPONENTS

3.1 Normal Operating Floor Air Conditioning System

3.1.1 Air Handling Units

The normal operating floor air handlers are AH-56, AH-57, AH-58, and AH-59. The air handling units are supplied by The Bahnson Company. They are non-seismic non-safety related equipment, floor mounted in the RAB on Elevation 324'. See Ebasco Specification BE-07 for the standards and requirements that apply to this equipment.

3.1.1.1 Fans

Each air handling unit has a centrifugal, belt-driven fan supplied by Barry Blower. The 25% capacity fans supply 20,000 CFM. They are Quality Class E.

3.1.1.2 Motors

Each fan is driven by a 40 HP, 460V, 60Hz, 3 phase induction motor. The drip proof motors are supplied by Westinghouse. AH-56 and AH-58 are powered from 480V MCC 1-4B11 COMPT. 5D and 6D, respectively. AH-57 and AH-59 are powered from 480V MCC 1-4A11 COMPT. 4E and 5D, respectively. They are Quality Class E.

3.1.1.3 Electric Heating Coils

The electric heating coils are supplied by Brasch Manufacturing Company. The pre-heat coils are rated at 375 KW, and the reheat coils are rated at 65 KW. The pre-heat coils (EHC-89, 91, 93, 95) are powered from 480V General Services Buses. EHC-89 and EHC-93 are powered from 1-4B102 COMPT. 5C and 5D respectively. EHC-91 and EHC-95 are powered from 1-4A1 COMPT. 3C and 3D respectively. The re-heat coils (EHC-90, 92, 94, 96) are powered from 480V Motor Control Centers. EHC-90 and EHC-94 are powered from 1-4B11 COMPT. 5BR and 6BR respectively. EHC-92 and EHC-96 are powered from 1-4A11 COMPT. 4BR and 5BR respectively. They are Quality Class E.

3.1.1.4 Cooling Coils

Each cooling coil consists of two 6 row sections and two 8 row sections. The Cu/Cu finned tube cooling coils are supplied by Aerofin and have 10 fins per inch. The cooling coils are designed for 250 gpm of chilled water and have a total cooling capacity of 2,001,800 BTU/Hr. Flow through the cooling coils is controlled by temperature control valves, one for each unit.

3.1.1.5 Medium Efficiency Filter Units

The medium efficiency filters are supplied by American Air Filter. Each filter unit has eight 24" x 24" x 36" and four 24" x 12" x 36" disposable, dry cell filters. These filters are composed of reinforced fine glass fiber, with a wire retainer designed to support the filter pleats.

3.1.2 Exhaust Fans

The normal operating floor exhaust fans are E-23, E-24, E-25, and E-26. The exhaust fans are supplied by Barry Blower. The belt-driven, centrifugal fans exhaust 22,000 CFM each. They are located in the RAB on Elevation 305.

The decontamination enclosure area exhaust fan (E-84) is also supplied by Barry Blower. The belt-driven, centrifugal fan exhausts 7000 CFM and is located in the decontamination area of the FHB, Elevation 272'.

3.1.2 Exhaust Fans (continued)

The clothing change area exhaust fan (E-43) is supplied by Buffalo Forge. The direct drive propeller fan exhausts 300 CFM and is located in the clothing change room in the FHB, Elevation 267'.

3.1.3 Exhaust Fan Motors

The normal operating floor exhaust fans are driven by 460V, 60Hz, 3 phase induction motors. The drip-proof motors are supplied by Westinghouse. E-23, E-25, and E-26 are rated at 40 HP and E-24 is rated at 50 HP. The motors are powered from 480V Motor Control Centers. E-23 is powered from 1-4A1022 COMPT. 1E. E-24 and E-26 are powered from 1-4B11 COMPT. 1A and 6C, respectively. E-25 is powered from 1-4A11 COMPT. 5C. They are Quality Class E.

The decontamination enclosure area exhaust fan (E-84) is driven by a 7.5 HP, 460V, 60 Hz, 3 phase induction motor. The drip-proof motor is supplied by Westinghouse. The motor is powered from 480V MCC 1-4B1021 COMPT. 5B.

The clothing change area exhaust fan (E-43) is driven by 1/6 HP, 115V, 60Hz, 1 phase induction motor. The totally enclosed, fan cooled motor is supplied by Reliance. The motor is powered from 120V Power Panel 1-4B10212 Ckt. 3.

3.1.4 Dampers

There are 28 dampers in the system. All of the dampers are parallel blade type and are supplied by Ruskin Manufacturing Company. The isolation dampers are Quality Class E, Seismic Category 1. Each of these dampers (FL-D4SA, FL-D5SB, FL-D8SA, FL-D9SB, FL-D11SA, FL-D12SB, FL-D21SA, FL-D22SB) is controlled by a pneumatic operator supplied by Bettis. All other dampers are controlled by a pneumatic operator supplied by Johnson. All of the dampers are designed to fail closed on a loss of power.

3.1.5 Flow Sensors

The system has eight flow sensors, FE-5015 (A1, A2, B1, B2), one for each of the normal supply and normal exhaust fans. Each flow sensor has a range of 0-24,000 CFM and is supplied by Brandt Industries, Inc. They are Quality Class E.

3.1.6 Flow Indicating Switches

The system has eight flow indicating switches, FIS-5015, (A1, A2, B1, B2) and FIS-5019 (A1, A2, B1, B2) one for each of the normal supply and normal exhaust fans. They are located at the discharge for each fan. The flow indicating switches are Dwyer Instruments Pholotelic switch/gauges.

3.1.7 Flow Switch

The system has one flow switch (FS-5049) provided by Fluid Components Incorporated. The flow switch has a range of 3-150 Ft/s with a 10 Ft/s setpoint. The switch is located on the discharge of the decontamination enclosure area exhaust fan.

3.1.8 Temperature Sensors

The system has 10 temperature sensors, all supplied by Claud S. Gordon. TE-5012 (A1, A2, B1, B2) are located downstream of the pre-heating coils and have a range of 20-120°F. TE-5018 (A1, A2, B1, B2) are located on the FHB operating floor and have a range of 0-100°F. TE-5019 (A,B) are located upstream of the normal exhaust fans in the common supply and have a range of 0-200°F. All are Quality Class E.

3.1.9 Moisture Sensors

The system has 2 moisture sensors (ME-5018, ME-5019), one in the common supply line to each pair of normal exhaust fans. The moisture sensors are supplied by General Eastern Instrument Co. and have a range of 15-95% relative humidity. They are Quality Class E.

3.1.10 Control Switches

The system has 11 control switches, 8 on AEP-2 in the Termination Cabinet Room and 3 local control switches. The eight control switches on AEP-2 are three position, spring return to auto switches. Of the local switches, one (CS-2937) is a three position, spring return to normal switch while the other two are two position, maintained contact switches. See Table 6.1 for a list of the control switches. They are Quality Class E.

3.2 Emergency Exhaust System

3.2.1 Air Cleaning Units

The air cleaning units are supplied by CTI - Nuclear and are designed to meet Safety Class 3, Seismic Category 1 requirements for the environmental conditions under which the units will operate see Ebasco Specification BE-31. The units are located on Elevation 261' of the Fuel Handling Building.

3.2.1.1 Demisters

The system contains two woven stainless steel and glass fiber mesh, 6,000 CFM demisters, one upstream of the heating coil in each train, for moisture removal. The demisters are supplied by ACS Industries. Each is capable of removing not less than 99 weight percent of entrained moisture in an airstream containing 1.5 to 2.0 lbs. of entrained water per 1000 cubic feet when operated at rated capacity. Each will remove not less than 99 count percent of the 2.5 to 10 mM diameter droplets without visible carryover, when operated at rated capacity. Each will also prevent blinding (a pressure drop increase greater than five percent) of the particulate filter when operated 24 hours at 260°F and 2 psig minimum with one gallon of water droplets entrained in the gas stream per 1,000 cubic feet of gas. Their maximum resistance is 1.0 inches wg. clean and 2.0 inches wg. loaded.

3.2.1.2 Electric Heating Coils

Heat is supplied by two 40 KW electric heating coils, one each for E-12 and E-13, capable of reducing the relative humidity of the inlet air from 100 percent to 70 percent. One heating coil is located in each train of the system, upstream of the medium efficiency filters. The heating coils are provided by Brasch Manufacturing Company. EHC-17 is powered from 480V MCC 1&4A33SA COMPT. 4AL, and EHC-18 is powered from 480V MCC 1&4B33SB COMPT. 2AL. They are Quality Class A.

3.2.1.3 Pre-filters

Each air cleaning unit has a medium efficiency filter unit, consisting of 6-24" x 24" x 6" filters, upstream of the HEPA filters. The cartridge type filters consist of a continuous sheet of super-fine fiberglass media that is closely pleated and has aluminum separators. The filter unit has a minimum efficiency of 60% by ASHRAE Standards. The pressure drop across the filter unit will not exceed .75 inches wg clean or 1.0 inches wg loaded. The filters are provide by American Air Filter.

3.2.1.4 HEPA Filters

Each air cleaning unit has two HEPA (High Efficiency Particulate Air) filter banks, one upstream of the charcoal absorber and one downstream. Each filter bank has 6 - 24" x 24" x 11 1/2" filters. The HEPA filters are provided by Flanders. The filter medium is glass paper separated by aluminum insets and has an efficiency of not less than 99.97 percent when tested with 0.3 micron dioctyl phthalate (DOP) smoke. Their maximum resistance is 1.0 inches wg. clean and 2.0 inches wg. loaded.

3.2.1.5 Charcoal Adsorbers

There are two charcoal adsorbers, one in each train, for removal of both stable and radioactive iodine. The adsorber media is impregnated coconut shell charcoal capable of removing 95 percent of elemental and organic iodines when operating at 70 percent relative humidity and at a face velocity of 40 Ft/m. The filter be consists of 10 - 36" x 68" x 2" cells, arranged vertically. The filter beds have an average atmospheric residence time of 0.25 seconds per two inches of bed and an iodine loading capacity of 2.5 mg of iodine per ram of activated charcoal.

3.2.1.6 Temperature Detection Units

The charcoal adsorbers are equipped with temperature detection units with a range of 135-305°F. These units (TAS-5023A, TAS-5023B) are supplied by Allison Controls, Inc. These units are designed to give a pre-alarm at 185°F and an alarm at 280°F.

3.2.2 Exhaust Fans

The exhaust fans are supplied by Brod and McClung-Pace Company. They are centrifugal, direct driven fans that exhaust 6000 CFM. The fans are located on Elevation 261' of the FHB. The exhaust fans have inlet vortex dampers that cycle to maintain differential pressure between the RAB and Fuel Handling Building. These dampers have hydramotor actuators.

3.2.3 Exhaust Fan Motors

Each exhaust fan is powered by a 30 HP, 460V, 60Hz, 3 phase induction motor. The totally enclosed, fan cooled motors are supplied by Reliance Electric Company. The motors are powered from 480V Motor Control Centers. E-12 is powered from 1&4A33Sa COMPT. 5e, and E-13 is powered from 1&4B22SB COMPT. 5E. They are Quality Class A.

3.2.4 Butterfly Valves

The system has five butterfly valves, supplied by BIF (BASIC IN FLOW, a division of General Signal). 1FV-2SA and 1FV-4SB are 24', motor operated valves. These valves are normally closed. The operator is supplied by Limitorque. 1FV-2SA is powered from 480V MCC 1&4A33SA COMPT. 2B, and 1FV-4SB is powered from 480V MCC 1&4B22SB COMPT. 4B. 3FV-B1SA and 3FV-B3SB are 24", manually operated valves. These valves are normally locked open. The manual operators are supplied by Limitorque. The valves are Quality Class A. R6

3.2.5 Flow Switches

Each train has a flow switch (FS-5027A, FS-5027B) on the discharge of the exhaust fans. The flow switches are provided by Fluid Components, Inc. and have a 3-150 Ft/s range with a 10 Ft/s setpoint. They are Quality Class A.

3.2.6 Temperature Sensors

The system has four temperature sensors. Two (TE-5027A, TE-5027B) are located on the discharge of the exhaust fans. These sensors are supplied by Weed Instrument Co. and have a range of 50-350°F. Two sensors (TE-5023A, TE5-23B) are located upstream of the charcoal adsorber. These sensors are supplied by Conax Corporation and have a range of 0-250°F. They are all Quality Class A.

3.2.7 Moisture Sensors

Each filtration train has a moisture sensor (ME-5024A, ME-5024B) located upstream of the charcoal adsorber. The moisture elements are provided by American Instrument Company and have a range of 40-100% relative humidity. They are Quality Class A.

3.2.8 Pressure Differential Switches

Each train has 3 Quality Class A pressure differential switches provided by Dwyer. PDS-5022a and PDS-5022B measure pressure drop across the pre-filter and have a 1-4 inches WC range with a 1 inch WC setpoint. PDS-5023A and PDS-5023B measure pressure drop across the HEPA filter upstream of the charcoal adsorber. These switches have a range of 1-4 inch WC and a 2 inch WC setpoint. PDS-5026A and PDS-5026B measure the pressure drop across the entire filtration train and have a range of 3-12 inch WC with an 8 inch WC setpoint.

3.2.9 Local Indicators

There are eight local indicators located on the air cleaning units, four for each unit. There are two temperature indicators and two pressure differential indicators for each of E-12 and E-13. TI-5021 (A15, B15) is located at the inlet to the electric heating coils. TI-5025 (A, B) is located at the inlet to the HEPA filters. PDI-5020 (A5, B5) measures the differential pressure across the demister while PDI-5025 (A5, B5) measures the differential pressure across the HEPA filter.

3.2.10 Control Switches

The system has four control switches on AEP-1. All the control switches are safety-related, three position, spring return to auto switches. See Table 6.1 for a list of the switches. They are Quality Class A.

3.3 Normal Ventilation System Below the Operating Floor

3.3.1 Air Handling Units

There are two air handling units AH-21 and AH-22. Each air handler contains two fans (A, B). The air handling units are non-safety and non-seismic equipment. They are supplied by the Bahnson Company. For standards and requirements applied to this equipment, refer to Ebasco Specification BE-07. AH-21 (A, B) is located in the RAB, Elevation 261', and AH-22 (A, B) is located in the FHB, Elevation 261'.

3.3.1.1 Fans

Each air handling unit has two vane axial, belt driven fans supplied by Buffalo Forge. Each 100% capacity fan in AH-21 (A, B) supplies 47,000 CFM, and each in AH-22 (A, B) supplies 46,800 CFM. They are Quality Class E.

3.3.1.2 Motors

Each fan is driven by a 100 HP, 460V, 60Hz, 3 phase induction motor, supplied by Westinghouse. The totally enclosed, air cooled motors are powered from the 480V Motor Control Centers. AH-21 (1-4A) is powered from 1-4A1021 COMPT. 4E, and AH-21 (1-4B) is powered from 1-4B11 COMPT. 4E. AH-22 (1-4A) is powered from 1-4A11 COMPT. 2E, and AH-22 (1-4B) is powered from 1-4B1022 COMPT. 3E. The motors are Quality Class E.

3.3.1.3 Electric Heating Coils

Each air handler has a 805 KW electric heating coil, supplied by Brasch Manufacturing Company, upstream of the fans. The electric heating coils are powered from the 480V General Service Buses. EHC-13 is powered from 1-4A102 COMPT. 5C, and EHC-15 is powered from 1-4B1 COMPT. 3C. The coils are Quality Class E.

3.3.1.4 Medium Efficiency Filter Units

Each air handling unit has a medium efficiency filter unit consisting of 24-24" x 24" x 24" x 36" filters. The filters are supplied by American Air Filter. The permanent filters are the disposable, dry cell type, composed of reinforced fine glass fiber. A wire retainer supports the filter pleats.

3.3.1.5 Dampers

Each air handling unit fan has an opposed blade damper on the inlet to the fan. The dampers are provided by American Warming and Ventilating. The dampers are controlled by two position, fail closed pneumatic operators. The operators are supplied by Bettis. The dampers are Quality Class E.

3.3.2 Exhaust Fans

There are two normal exhaust fan units E-11 and E-14. Each unit contains two fans (A, B). The normal exhaust fans are supplied by Barry Blower Company. Each 100% capacity fan is centrifugal and belt driven and exhausts 47,000 CFM. The fans are located in the FHB, Elevation 261'.

The FHB HVAC Equipment Room exhaust fan E-15 is supplied by Buffalo Forge. The direct driven propeller fan exhausts 3000 CFM and is located in the HVAC equipment room, FHB Elevation 261'.

3.3.2.1 Exhaust Fan Motors

The normal exhaust fans are driven by 125 HP, 460V, 3 phase, 60 Hz induction motors. The Quality Class E, drip proof motors are supplied by Westinghouse. The motors are powered from the 480V General Service Buses. E-11 (1-4A) and E-14 (1-4A) are powered from 1-4A1 COMPT. 3B & 3A, respectively. E-11 (1-4B) and E-14 (1-4B) are powered from 1-4B102 COMPT. 5B and 1-4B1 COMPT. 4C, respectively.

The HVAC Equipment Room exhaust fan E-15 is driven by a .75 HP, 460V, 3 phase, 60 Hz induction motor. The totally enclosed, fan cooled motor is supplied by Reliance Electric Company. Power is supplied by 480V MCC 1-4B1022 COMPT. 4B. The motor is Quality Class E.

3.3.2.2 Electric Heating Coil

EHC-109 is duct mounted in the FHB at Elevation 270' in the shower/clothes change area. The 10 KW electric heating coil is supplied by Brasch Manufacturing Company. Power is supplied from 480V MCC 1-4B1022 COMPT. 3BR. The coils are Quality Class E.

3.3.2.3 Electric Unit Heater

The HVAC Equipment Room electric unit heater EUH-31 equipped with an adjustable thermostat and is totally self-contained. The 15 KW wall-mounted heater is supplied by Brasch Manufacturing Company and is powered from 480V MCC 1-4B1021 COMPT. 3AR. The heater is Quality Class E.

3.3.3 Dampers

There are 22 total dampers in the system. Four of these are part of the air handling unit (See 3.3.1.5). All of the remaining dampers are the parallel blade type and are supplied by Ruskin Manufacturing Company. The dampers isolating the loading area (FL-D35SA, FL-D36SB, FL-D37SA, FL-D38SB) are Quality Class A, Seismic Category 1. These dampers are controlled by a Bettis supplied pneumatic operator. All of the other dampers are controlled by pneumatic operators supplied by Johnson. All of the dampers are designed to fail closed on a loss of power.

3.3.4 Louvers

The system has two motorized louvers located in the HVAC equipment room. The parallel blade louvers are supplied by the Airolite Company. The operator is supplied by Honeywell.

3.3.5 Flow Sensors

The system has 4 flow sensors (FE-5033, FE-5038, FE-5040, FE-5045,) all supplied by Brandt Industries, Inc. FE-5033 is located in the common suction line to AH-21. FE-5038 is located in the common discharge line from AH-22. FE-5040 and FE-5045 are located in the common discharge line of E-11 and E-14, respectively. Each flow sensor has a range of 0-55,000 CFM. They are Quality Class E.

3.3.6 Temperature Sensors

There are 2 temperature sensors in the system (TE-5031, TE-5036) supplied by Claud S. Gordon. They are located in the common supply lines to the exhaust fans. Each sensor has a range of 0-100°F. They are Quality Class E.

3.3.7 Control Switches

They system has 11 control switches, 9 are on AEP-2 and 2 are on AEP-1. All 9 switches on AEP-2 are three position, spring return to auto switches. The 2 control switches on AEP-1 are safety related, three position, spring return to normal switches. For a list of the control switches, see Table 6.1.

3.4 Spent Fuel Pool Pump Room Ventilation System

3.4.1 Air Handling Units

The air handling units are Safety Class 3, Seismic Category 1 equipment, supplied by Bahnson. For information regarding standards and requirements applied to this equipment, see ebasco Specification BE-08. The air handling units are located in the FHB, Elevation 261'.

3.4.1.1 Fans

Each air handling unit has a belt-driven, centrifugal fan. The 18,000 CFM fans are supplied by Westinghouse. They are Quality Class A.

3.4.1.2 Motors

Each fan is driven by a 20 HP, 460V, 60 Hz, 3 phase induction motor. The totally enclosed, fan cooled motors are supplied by Reliance Electric Company. Power is supplied from the 480V Motor Control Centers. AH-17 (1-4A) is powered from 1&4A33SA COMPT. 4C, and AH-17 (1-4B) is powered from 1&4B33SB COMPT. 2C. They are Quality Class A.

3.4.1.3 Cooling Coils

Two banks of cooling coils are provided upstream of each fan. The finned, 8 fins per inch, Cu/Cu tubes are supplied by Carrier. Essential Services Chilled Water provides 27 gpm to the cooling coils yielding a total cooling capacity of 419,200 Btu/hr. They are Quality Class A.

3.4.1.4 Medium Efficiency Filter Units

Each air handling unit has a medium efficiency filter unit consisting of 8-24" x 24" x 36" and 4-24" x 12" x 36" filters. The filters are supplied by American Air Filter. The filters are the disposable, dry cell type, composed of reinforced fine glass fiber. Support for the filter pleats is provided by a wire retainer.

3.4.2 Flow Sensors

The system has 2 flow sensors (FE-6538A, FE-6538B), one on the discharge of each fan. Both sensors are supplied by Air Monitor Company and have a range of 0-20,000 CFM. They are Quality Class A.

3.4.3 Temperature Sensors

The system has four temperature sensors (TE-6537A, TE-6537A1, TE-6537B, TE-6537B1) supplied by Weed Instrument Company. The temperature sensors have a range of 50-150°F and are located in the Spent Fuel Pool Pump Room. They are Quality Class A.

3.4.4 Control Switches

The system has 2 safety related control switches on AEP-1. Both control switches are three position, spring return to normal switches. See Table 6.1 for a list of the switches.

4.0 OPERATIONS

CAUTION

Setpoints given in this SD are for reference only. Actual values should be obtained from a controlled setpoint document.

4.1 Normal Operating Floor HVAC System

The prerequisites for operation of the Normal Operating Floor HVAC System are:

1. Electrical power is available.
2. Non-essential Services Chilled Water is available to the cooling coils.
3. No radiation alarms for the area are activated.

4.1.1 Normal Supply System

The normal supply system has four control switches, eight alarms, and eight damper status light modules on AEP-2 (Auxiliary Equipment Panel), located in the Termination Rack Room adjacent to the Main Control Room. There are also four damper status light modules on AEP-1 in the Main Control Room.

The control switches are used for manual fan operation. Each control switch has four indicating lights, white, amber, green and red. The white light indicates a motor overload. The amber light is not used. The green light indicates that the fan is stopped, and the red light indicates that the fan is in operation. If no lights area on, it is an indication that power to the motor control center is secured or the bulb has failed.

4.1.1 Normal Supply System (continued)

The fan inlet and outlet dampers have status indicating lights on AEP-2, Status Light Box 1 (SLB-1). The supply system isolation dampers have status indicating lights on AEP-1, SLB-9 and SLB-11. Each damper has two status lights, one green and one red. The green light indicates that the damper is shut, and the red light indicates that the damper is open. If both lights are on, the damper is in midstroke. No lights on indicates loss of electric power or bulb failure.

The supply fans have eight alarms on AEP-2. Each fan has a trouble alarm which is actuated by either a low flow condition or a motor overload trip. Each fan also has a low temperature alarm. See Table 6.2 for the individual alarms.

During normal system operation, all four supply fans (AH-56, AH-57, AH-58, AH-59) are operated. The fans may be manually started by the control switch or automatically started by the start of the exhaust fans. During fan starts, the low flow signal is temporarily blocked, allowing the fan to reach full speed. The fans will automatically stop on receipt of one or more of the following signals:

1. Low fan discharge flow.

2. Thermal motor overload.

3. High radiation in the fuel handling building.

4. Low cooling coil inlet temperature.

5. Smoke detection.

See Table 6.1 for the time delay relays that control system operation. The fans are not required to operate under accident conditions (LOCA, loss of offsite power or a fuel handling accident).

Operation of both the inlet and outlet dampers is automatically controlled by operation of the fans. The dampers open when the fans start and close when the fans stop. The dampers close automatically on either a loss of power or a high radiation signal in the Fuel Handling Building.

The electric heating coils are interlocked with the fans and operate only when the fans are running. When in operation, the preheating EHC's are modulated by their outlet temperature. The other EHC's are modulated by the temperature of the operating floor.

The non-essential services chilled water valves to the cooling coils are also interlocked with the fans. The valves are closed when the fans are stopped and modulate when the fans are running. Modulation is controlled by both the operating floor temperature and humidity.

4.1.2 Normal Exhaust System

The normal exhaust system has four control switches, eight alarms, and eight damper status light boxes on AEP-2. There are also four damper status light boxes on AEP-1.

The control switches are used for manual fan operation. Each control switch has four indicating lights, white, amber, green, and red. The white light indicates a motor overload. The amber light is not used. The green light indicates that the fan is stopped, and the red light indicates that the fan is running. If no lights are on, it is an indication that power to the motor control center is secured or the bulb has failed.

The exhaust system isolation dampers have status indicating lights on AEP-1, SLB-9 and SLB-11. The fan inlet and outlet dampers have status indicating lights on AEP-2, SLB-1. Each damper has two status lights, one green and one red. The green light indicates that the damper is shut, and the red light indicates that the damper is open. If both lights are on, the damper is in midstroke. No lights on indicates a loss of power or bulb failure.

The exhaust fans have eight alarms on AEP-2. Each fan has a trouble alarm which is actuated by either a low flow condition or a motor overload trip. Each pair of fans having a common suction has a high temperature alarm and a high humidity alarm. These two alarms provide annunciation only and have no control function. For a list of the individual alarms see Table 6.2.

During normal system operation, all four exhaust fans (E-23, E-24, E-25, E-26) are operated. There are no automatic starts for these fans. The fans must be manually started by the control switches. During fan starts, the low flow signal is temporarily blocked, allowing the fan to attain rated speed. The fans will automatically stop on receipt of one or more of the following signals:

1. Low fan discharge flow.

2. Thermal motor overload.

3. High radiation in the Fuel Handling Building.

See Table 6.3 for the time delay relays that control system operation.

In case of a fire, the exhaust fans can be used to purge the Fuel Handling Building of smoke. The fans are not required to operate under other emergency conditions (LOCA, loss of offsite power, or a fuel handling accident).

Operation of both the inlet and outlet dampers is interlocked with operation of the fans. The dampers will automatically open when the fans are started and close when the fans stop. A loss of power will cause the dampers to fail closed.

4.1.2 Normal Exhaust System (continued)

Operation of the exhaust isolation dampers is also interlocked with fan operation. The dampers open when the fan starts and close when the fans stop. The dampers close automatically on either a loss of power or a high radiation signal in the Fuel Handling Building.

4.1.3 FHB Cask Decontamination Exhaust System

The FHB cask decontamination exhaust system has two local control switches, one alarm, and four status light modules.

The local control switches start the Exhaust Fan (E-84) and position the dampers. Status indication (red and green lights) is provided for fan operation both locally and on AEP-2, SLB-1. The red light indicates the fan is running, and the green light indicates the fan is stopped. No lights on indicates loss of power or bulb failure. The damper control switch determines whether the decontamination area or the decontamination enclosure is ventilated. This control switch has no status indication.

The fan outlet damper, the decontamination area isolation damper and the decontamination enclosure isolation dampers all have status indication (red and green lights) displayed on AEP-2, SLB-1. The green light indicates the damper is open. Both lights on indicate the damper is in midstroke. No lights on indicates loss of power or bulb failure.

The system has only one alarm on AEP-2 indicating E-84 fan trouble. The alarm is actuated by either a low flow signal or a motor overload trip. See Table 6.2 for the annunciator.

The FHB cask decontamination exhaust fan should only be operated during the cask decontamination process, when the normal exhaust fans (E-25 and/or E-26) are also operating. The fan must be manually operated by the control switch. During fan starts the low flow signal is temporarily blocked to allow the fan to reach full speed. The fan will automatically stop on a low flow signal. See Table 6.3 for the time delay relays that control the automatic system operation.

The exhaust fan outlet damper, FL-058, is interlocked with fan operation and automatically opens when then fan starts and closes when the fan stops. A loss of power will cause the damper to fail closed.

The isolation dampers are controlled by the local control switch and are also interlocked with fan operation. The dampers can open only when E-84 starts. The control switch determines which dampers will open on a fan start. If the control switch is in the DECON AREA position, FL-D57 will open on fan starts, and FL-D55 and FL-D56 will remain closed. If the control switch is in the DECON ENCLOSURE position, FL-D55 and FL-D56 will open, and FL-D57 will remain closed. All of the isolation dampers close when the fan stops. A loss of power will also cause the dampers to fail closed.

4.1.4 Clothing Change Area Ventilation System

The clothing change area exhaust fan (E-43) is locally controlled and is operated only during the decontamination process. The control switch is a simple on/off switch and has no status indication.

4.2 Emergency Exhaust System

Prerequisites for operation of the Emergency Exhaust System are:

1. Electric power is available.

2. Engineered Safeguards Sequencer (ESS) manual load permissive is received. (Note: This permissive is lost when the ESS is initially activated and is regained on Load Block 9.)

For operation of the system, there are four control switches and ten alarms on AEP-1.

One control switch per fan enables manual operation of the fan. Each of these control switches has four indicating lights, white, amber, green, and red. The white light indicates a motor overload trip. The amber light is not used. The green light indicates that the fan is stopped, and the red light indicates that the fan is running. If no lights are on, it is an indication that power to the motor control center is secured or the bulb has failed.

One control switch per fan inlet damper enables the dampers to be manually positioned for system operation. Each of these control switches has four indicating lights, white, amber, green, and red. The white light indicates that the damper is shut, and the red light indicates that the damper is open. If both lights are on, the damper is in midstroke. No lights on indicates loss of power or bulb failure.

The system has ten alarms on AEP-1. Each fan has a trouble alarm which is activated by either a low flow condition or a motor overload trip. Each fan also has a high humidity alarm. A high temperature alarm and an high high temperature alarm are actuated by a high temperature and a high high temperature, respectively, on the discharge of either fan. Each charcoal adsorber has a trouble alarm which is activated by either a pre-high temperature detection, a high temperature detection, or a detector failure. Each filtration train has a high differential pressure alarm which is activated by detection of high differential pressure across the medium efficiency filter, the HEPA pre-filter, or the entire filtration train. All of the alarms provide annunciation only and have no control function. See Table 6.2.

4.2 Emergency Exhaust System (continued)

The Emergency Exhaust System is normally activated by a high radiation signal, indicative of a fuel handling accident. An ESS Manual load permissive must also be in effect. Upon receipt of the signal, both Fans (E-12, 13) will automatically start. The low flow signal is temporarily blocked during fan starts to allow the fan to reach full speed (See Table 6.3). When the fan start, the inlet dampers automatically open. Either fan may then be deenergized and placed on standby using the control switch. The respective inlet damper will automatically shut when the fan stops. Manual control of both the fans and the dampers can be accomplished with the control switches if necessary, if the ESS manual load permissive is in effect. The only automatic stop for the emergency exhaust fans is a motor overload trip. The fans must be manually stopped at the Operator's discretion.

Operation of the electric heating coil is interlocked with operation of its respective fan. The electric heating coil does not operate when the fan is not running and modulates when the fan is running. Modulation is achieved by temperature control based on the outlet temperature of the HEPA prefilter.

In the event of a loss of coolant accident or a loss of offsite power, the emergency exhaust system can be operated if needed, after receiving a manual load permissive (Load Block 9) from the Engineered Safeguards Sequencer.

4.3 Normal Ventilation System Below the Operating Floor

The only prerequisite for operation of the Normal Ventilation System below the operating floor is electric power availability.

4.3.1 Normal Ventilation Supply System

The normal ventilation supply system below the operating floor has four control switches, two alarms, and ten damper status light boxes on AEP-2. There are also two control switches and four damper status light boxes on AEP-1.

The AEP-2 control switches are used for manual fan operation. Each control switch has four indicating lights, white, amber, green, and red. The white light indicates a motor overload. The amber light is not used. The green light indicates that the fan is stopped, and the red light indicates that the fan is operating. If no lights are on, power to the motor control center is secured or the bulb has failed. The AEP-1 control switches are used to position the loading area isolation dampers.

The loading area isolation dampers have status indication displayed on AEP-1. All other dampers in the system have status indication displayed on AEP-2, SLB-1. Status is shown by a green light (indicating the damper is shut) and a red light (indicating the damper is open). If both lights are on, the damper is in midstroke. No lights on indicates loss of power or bulb failure.

4.3.1 Normal Ventilation Supply System (continued)

There are two alarms on AEP-2 for this system. The alarms indicate trouble with the air handlers and are actuated by a low flow condition or a thermal overload trip. See Table 6.2 for the individual alarms.

Normally, one fan in each air handler is operated with the other fan on standby. The fans are interlocked to prevent simultaneous operation of both fans in the same air handler. The fans can be manually operated from the control switch. An automatic start is generated by start-up of the corresponding exhaust fan. The low flow signal is temporarily blocked on fan starts to allow the fan to reach full speed. If the operating fan trips due to low flow, it receives a stop signal, the standby fan receives a start signal and an alarm is given on AEP-2. If the standby fan also trips, the tripped fan is prevented from restarting. See Table 6.3. An automatic stop signal is also generated by smoke detection. On a smoke detection stop signal, the standby fan is not started.

The loading area isolation dampers must be manually controlled with the AEP-1 control switches. The dampers will, however, automatically shut on receipt of a high radiation signal to isolate the loading area.

The outside air dampers and the fan inlet and outlet dampers are interlocked with fan operation. Starting a fan automatically opens its respective dampers. Stopping the fan closes the dampers.

EHC-13 and EHC-15 are also interlocked with the fans. These electric heating coils do not operate when both fans are stopped and modulate whenever one fan is operating. Modulation of EHC-13 and EHC-15 is controlled by the duct outlet air temperature.

EHC-109 is interlocked with AH-22 operation and also with the position of the loading area isolation dampers. In order for EHC-109 to operate, one fan in AH-22 must be operating and the loading area isolation dampers must be open. Modulation is controlled by the temperature of the shower, lavatories, clothing change area.

The normal ventilation supply system below the operating floor is not required to operate following a LOCA or a loss of offsite power. The system will continue to operate during a fuel handling accident, with the exception of the isolation of the loading area.

4.3.2 Normal Ventilation Exhaust System

The normal ventilation exhaust system below the operating floor has four control switches, two alarms, and eight damper status light boxes on AEP-2.

The control switches are used for manual operation of the fans. Each control switch has four indication lights; white, amber, green, and red. The white light is lit whenever the motor trips due to a thermal overload. The amber light is not used. The green light is on when the fan is stopped, and the red light is on when the fan is running. If no lights are on, power to the motor control center is secured or the bulb has failed.

4.3.2 Normal Ventilation Exhaust System (continued)

The fan inlet and outlet dampers have status indication displayed on AEP-2, SLB-1. Status is shown by a green light (indicating the damper is shut) and a red light (indicating the damper is open). If both lights are on, the damper is in midstroke. If no lights are on, power has been secured or the bulb has failed.

The system has two alarms on AEP-2, indicating trouble with the exhaust fans. The alarms are activated by a low flow condition or the undervoltage trip. See Table 6.2 for the individual alarms.

Normally, one of each pair of fans is operating with the second fan on standby. The fans are controlled manually from the control switch. The low flow signal is temporarily blocked during fan starts to permit the fan to reach full speed. if the operating fa trips due to low flow, it receives a stop signal, the standby fan receives a start signal and an alarm is given on AEP-2. If the standby fan should also trip, the tripped fan is prevented from restarting. See Table 6.3. An automatic stop signal is also generated by smoke detection. On a smoke detection stop signal, the standby fan is not started.

The operation of the fan inlet and outlet dampers is interlocked with fan operation. Starting a fan automatically opens its respective dampers. Stopping the fan automatically closes the dampers.

The normal ventilation exhaust system below the operating floor is not required to operate following a LOCA or a loss of offsite power. The system will continue to operate during a fuel handling accident.

4.3.3 HVAC Equipment Room Ventilation System

The HVAC equipment room ventilation system has one control switch, one alarm, and two status light boxes on AEP-2.

The control switch is used for manual operation of the fan. The control switch has four indication lights; white, amber, green, and red. The white light indicates a thermal overload trip. The amber light is not used. The green light indicates that the fan is stopped, and the red light indicates that the fan is running.

The motorized louvers/dampers have status indicating lights on AEP-2, SLB-1. Each damper has two status lights; red and green. The green light indicates that the damper is shut, and the red light indicates that the damper is open. If both lights are on, the damper is in midstroke. If no lights are on, control power is secured or the bulb has failed.

The fan has one alarm on AEP-2 which indicates fan trouble. The alarm is actuated by a thermal overload trip.

The fan may be operated manually from the control switch, except when the room temperature is less than 60°F. The fan receives an automatic start signal whenever the room temperature is above 104°F. If the fan is running and the room temperature drops below 60°F, the fan will receive an automatic stop signal.

4.3.3 HVAC Equipment Room Ventilation System (continued)

The louver/damper operation is interlocked with fan operation. Both dampers open when the fan starts and close when the fan stops.

The electric unit heater is self-contained. Its built-in thermostat, set for 60°F, automatically turns the heater on and off as needed.

No components of this system are required to operate following a LOCA or a loss of offsite power. The system will continue to operate during a fuel handling accident.

4.4 Spent Fuel Pool Pump Room Ventilation System

The prerequisites for operation of the spent fuel pool pump room ventilation system are:

1. Electric power is available.

2. Essential Services Chilled Water is available to the cooling coils.

3. Engineered Safeguards Sequencer manual load permissive is received. (Note: This permissive is lost when the ESS is initially activated and is regained on Load Block 9.)

For operation of the system, there are two control switches, three alarms, and four valve status light boxes on AEP-1.

The control switches are used for manual operation of the fan. Each control switch has four indicating lights; white, amber, green, and red. The white light indicates a thermal overload trip. The amber light is not used. The green light indicates that the fan is stopped, and the red light indicates that the fan is running. If not lights are on, power is secured at the motor control center or the bulb has failed.

Status light boxes are provided for the cooling water supply and return valves to assure availability of cooling water to the cooling coils. The train A valves have status lights (red and green) on SLB-11, while the train B status lights are on SLB-9. The green light indicates that the valve is shut, and the red light indicates the valve is open. If both lights are on, the valve is in midstroke. If no lights are on, power has been secured or the bulb has failed.

Each fan (AH-17A and AH-17B) has a fan trouble alarm on AEP-1 which is activated by a low flow condition or a thermal overload trip. An alarm is also provided on AEP-1 for a high temperature condition in the spent fuel pool pump room. See Table 6.2.

4.4 Spent Fuel Pool Pump Room Ventilation System (continued)

Normally, one fan is operated with the other fan on standby. The fans must be manually controlled from the control switches. Before starting the fan, an Engineered Safeguards Sequencer manual load permissive must be present. Also, the cooling water supply and return valves must be open. These conditions must be maintained for fan operation or the fans will automatically stop. A low flow condition activates an alarm, but has no control function. Operator action is required to stop the malfunctioning fan and to start the standby fan. See Table 6.3.

The spent fuel pool pump room temperature controls the cooling water modulating valve to the cooling coil. An alarm is given on high temperature, and temperature indication is provided on AEP-1.

During a fuel handling accident, the system will continue to operate as normal.. Following a LOCA or a loss of offsite power, the fans can be operated as normal following receipt of the ESS manual load permissive (Load Block 9).

4.5 Limiting Conditions for Operation

There is one limiting condition for operation of the Fuel Handling Building HVAC System.

4.5.1 Technical Specification 3.9.12

Technical Specification 3.9.12 states that whenever irradiated fuel is in the storage pool, two independent Fuel Handling Building Emergency Exhaust System trains shall be operable.

With one Fuel Handling Building Emergency Exhaust System train inoperable, fuel movement within the storage pool or crane operation with loads over the storage pool may proceed provided the operable Fuel Handling Building Emergency Exhaust System train is capable of being powered from an operable emergency power source and is in operation and discharging through at least one train of HEPA filters and charcoal adsorbers.

With no Fuel Handling Building Emergency Exhaust System trains operable, all operations involving movement of fuel within the storage pool or crane operation with loads over the storage pool must be suspended until at least one Fuel Handling Building Emergency Exhaust System train is restored to operable status.

5.0 INTERFACE SYSTEMS

5.1 Systems Required for Support

1. Power is supplied by the 480VAC and 120VAC systems (SD-156).

2. Control Power is supplied by the 125VDC system (SD-156).

3. The Essential Services Chilled Water System supplies water to the SFP Pump Room Ventilation System cooling coils (SD-148).

4. The Non-essential Services Chilled Water System supplies water to the normal operating floor supply system cooling coils (SD-147).

5.2 System-to-System Crossties

There are no system-to-system crossties in the Fuel Handling Building HVAC System.

6.0 TABLES

6.1 - Control Switches
6.2 - FHB HVAC Alarms
6.3 - Time Delay Relays

TABLE 6.1
Control Switches

Normal Operating Floor Air Conditioning System:

Control Switch	Location	Equipment
CS-2861	AEP-2	E-23
CS-2867	AEP-2	AH-56
CS-2863	AEP-2	E-24
CS-2872	AEP-2	AH-57
CS-2876	AEP-2	E-25
CS-2882	AEP-2	AH-58
CS-2878	AEP-2	E-26
CS-2886	AEP-2	AH-59
CS-2937	Local	E-84
CS-2935	Local	FL-D55, FL-D56, FL-D57
CS-2938	Local	E-43

Emergency Exhaust System:

Control Switch	Location	Equipment
CS-2915SA	AEP-1	E-12
CS-2918SA	AEP-1	1FV-2SA
CS-2916SB	AEP-1	E-13
CS-2919SB	AEP-1	1FV-4SB

Normal Ventilation System Below the Operating Floor:

Control Switch	Location	Equipment
CS-2898	AEP-2	AH-21 (1-4A)
CS-2901	AEP-2	AH-21 (1-4B)
CS-2891	AEP-2	AH-22 (1-4A)
CS-2894	AEP-2	AH-22 (1-4B)
CS-2841	AEP-2	E-15
CS-2843SA	AEP-1	FL-D35SA, FL-D37SA
CS-2844SB	AEP-1	FL-D36SB, FL-D38SB
CS-2890	AEP-2	E-11 (1-4A)
CS-2893	AEP-2	E-11 (1-4B)
CS-2897	AEP-2	E-14 (1-4A)
CS-2900	AEP-2	E-14 (1-4B)

Spent Fuel Pool Pump Room Ventilation System:

Control Switch	Location	Equipment
CS-2846SA	AEP-1	AH-17 (1-4A)
CS-2849SB	AEP-1	AH-17 (1-4B)

TABLE 6.2
FHB HVAC Alarms

Normal Operating Floor Air Conditioning System:

Alarm	Location	Annunciator
FAN AH56 TRBL	AEP-2	39-8
FAN AH57 TRBL	AEP-2	39-4
FAN AH58 TRBL	AEP-2	39-6
FAN AH59 TRBL	AEP-2	39-2
EHC 89 LO TEMP	AEP-2	41-3
EHC 91 LO TEMP	AEP-2	41-4
EHC 93 LO TEMP	AEP-2	40-3
EHC 95 LO TEMP	AEP-2	40-4
FAN E23 TRBL	AEP-2	39-7
FAN E24 TRBL	AEP-2	39-3
FAN E25 TRBL	AEP-2	39-5
FAN E26 TRBL	AEP-2	39-1
E23/E24 HI TEMP	AEP-2	41-2
E25/E26 HI TEMP	AEP-2	40-2
E23/E24 HI HUM	AEP-2	41-6
E25/E26 HI HUM	AEP-2	41-5
FAN E84 TRBL	AEP-2	41-7

Emergency Exhaust System:

Alarm	Location	Annunciator
FHB EMER EXH FAN E-12 TRBL	AEP-1	ALB-23, 4-10
FHB EMER EXH FAN E-13 TRBL	AEP-1	ALB-23, 5-10
EXH FAN E-12 HI HUMIDITY	AEP-1	ALB-23, 4-8
EXH FAN E-13 HI HUMIDITY	AEP-1	ALB-23, 5-8
FAN E-12 E-13 EXH. TEMP HI	AEP-1	ALB-23, 5-6
FAN E-12 E-13 EXH. TEMP HI-HI	AEP-1	ALB-23, 5-5
EXH. FAN E-12 CHAR FLTR TRBL	AEP-1	ALB-23, 4-9
EXH. FAN E-13 CHAR FLTR TRBL	AEP-1	ALB-23, 5-9
EXH. FAN E-12 FLTR/SYS WP	AEP-1	ALB-23, 4-7
EXH. FAN E-13 FLTR/SYS WP	AEP-1	ALB-23, 5-7

TABLE 6.2
FHB HVAC Alarms

Normal Ventilation System Below the Operating Floor:

Alarm	Location	Annunciator
FAN AH21 TRBL	AEP-2	40-8
FAN AH22 TRBL	AEP-2	40-6
FAN E11 TRBL	AEP-2	40-5
FAN E14 TRBL	AEP-2	40-7
FAN E-15 OVERLOAD	AEP-2	41-8

Spent Fuel Pool Pump Room Ventilation System:

Alarm	Location	Annunciator
FHB SFP AREA AH-17A TRBL	AEP-1	ALB-23, 4-12
FHB SFP AREA AH-17B TRBL	AEP-1	ALB-23, 5-12
FHB SFP AREA ROOM HI TEMP	AEP-1	ALB-23, 4-13

TABLE 6.3
Time Delay Relays

Normal Operating Floor Air Conditioning System:

Equipment	Blocks low flow during fan starts	Blocks low temp signal	Transmits start to corresponding AH
AH-56	2/2867	2-1/2870	
AH-57	2/2872	2-2/2870	
AH-58	2/2882	2-1/2884	
AH-59	2/2886	2-2/2884	
E-23	2-1/2861		2-2/2861
E-24	2-1/2863		2-2/2863
E-25	2-1/2876		2-2/2876
E-26	2-1/2878		2-2/2878
E-84	2/2937		

Emergency Exhaust System:

Equipment	Transmits momentary start signal	Blocks low flow during fan starts
E-12	2-1/2915	2-3/2915
E-13	2-1/2916	2-3/2916

Normal Ventilation System Below the Operating Floor:

Equipment	Blocks low flow during fan starts	Transmits start to corresponding AH	Maintains start to standby train	Blocks auto restart of tripped fan
AH-21 (1-4A)	2/2898		62-1/2898	62-2/2898
AH-21 (1-4B)	2/2901		62-1/2901	62-2/2901
AH-22 (1-4A)	2/2891		62-1/2891	62-2/2891
AH-22 (1-4B)	2/2894		62-1/2894	62-2/2894
E-11 (1-4A)	2-1/2890	2-2/2890	62-1/2890	62-2/2890
E-11 (1-4B)	2-1/2893	2-2/2893	62-1/2893	62-2/2893
E-14 (1-4A)	2-1/2897	2-2/2897	62-1/2897	62-2/2897
E-14 (1-4B)	2-1/2900	2-2/2900	62-1/2900	62-2/2900

Spent Fuel Pool Pump Room Ventilation System:

Equipment	Blocks low flow during fan starts
AH-17 (1-4A)	2-1/2846
AH-17 (1-4B)	2-1/2849

7.0 FIGURES

7.1 - Normal Operating Floor HVAC System

7.2 - FHB Operating Floor Emergency Exhaust System

7.3 - Ventilation System Below Operating Floor

7.4 - Spent Fuel Pool Pump Room Ventilation System

7.5 - FHB HVAC AEP-1 Controls

7.6 - FHB HVAC AEP-2 Controls

OS4

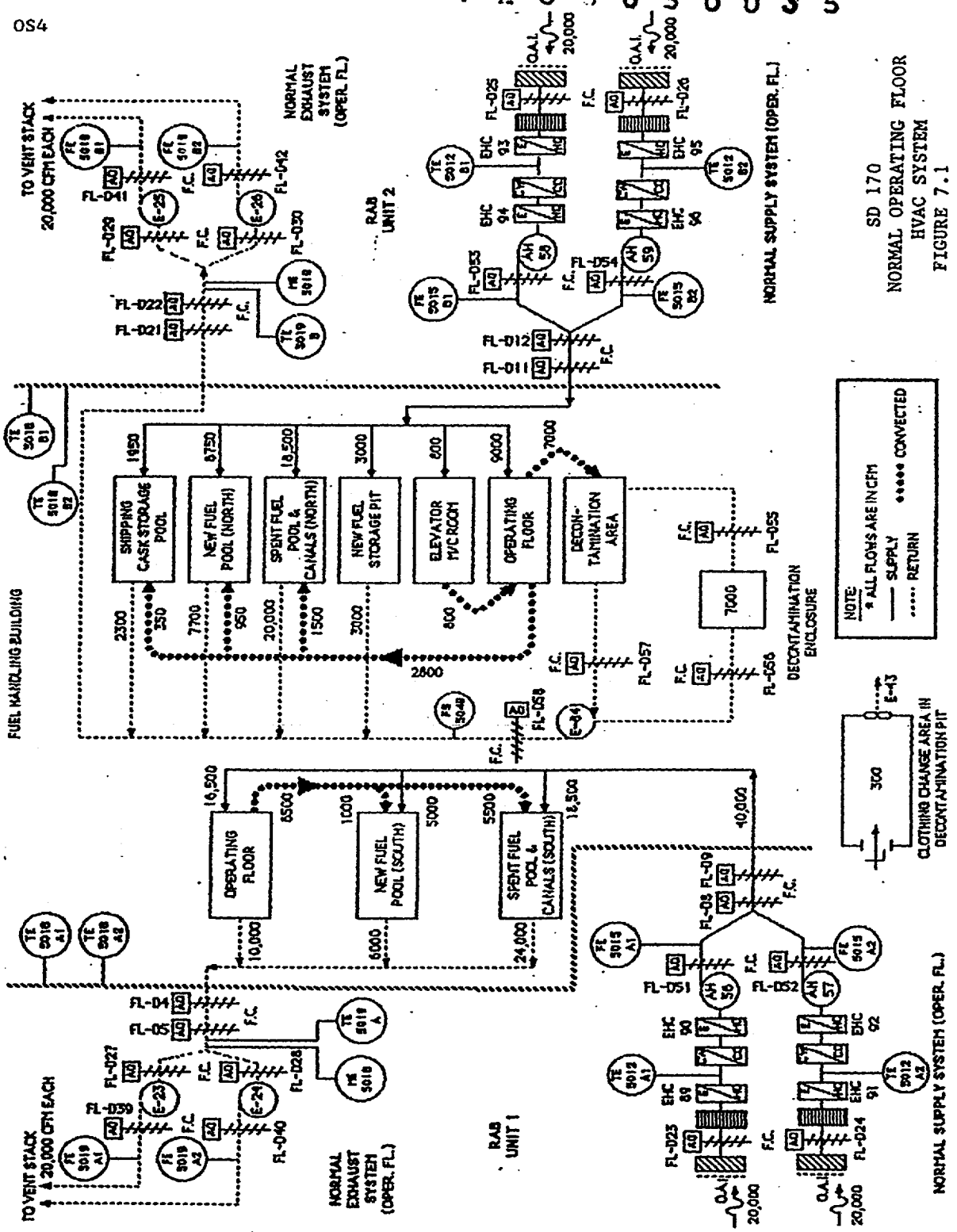

SD 170
NORMAL OPERATING FLOOR
HVAC SYSTEM
FIGURE 7.1

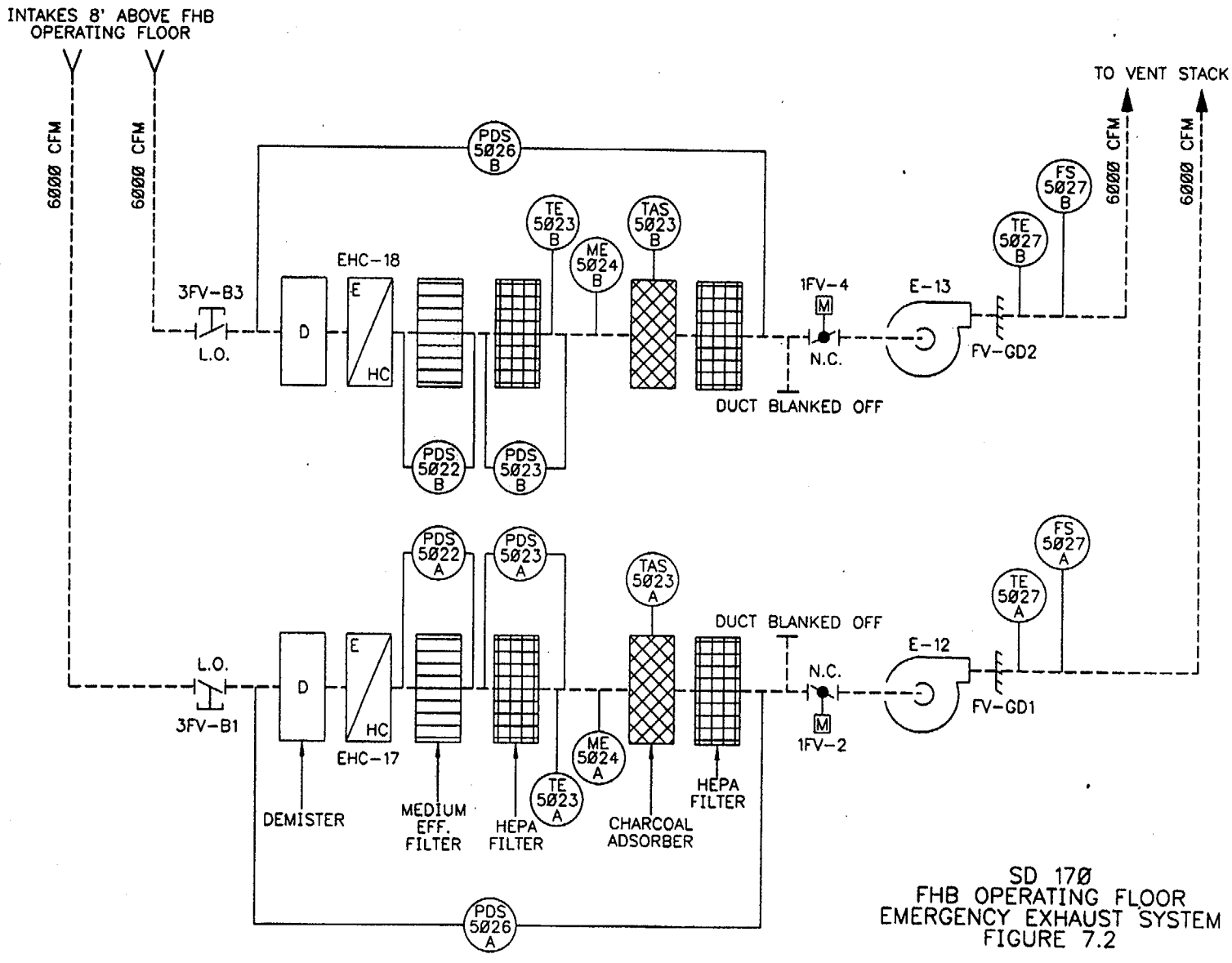

SD 170
FHB OPERATING FLOOR
EMERGENCY EXHAUST SYSTEM
FIGURE 7.2

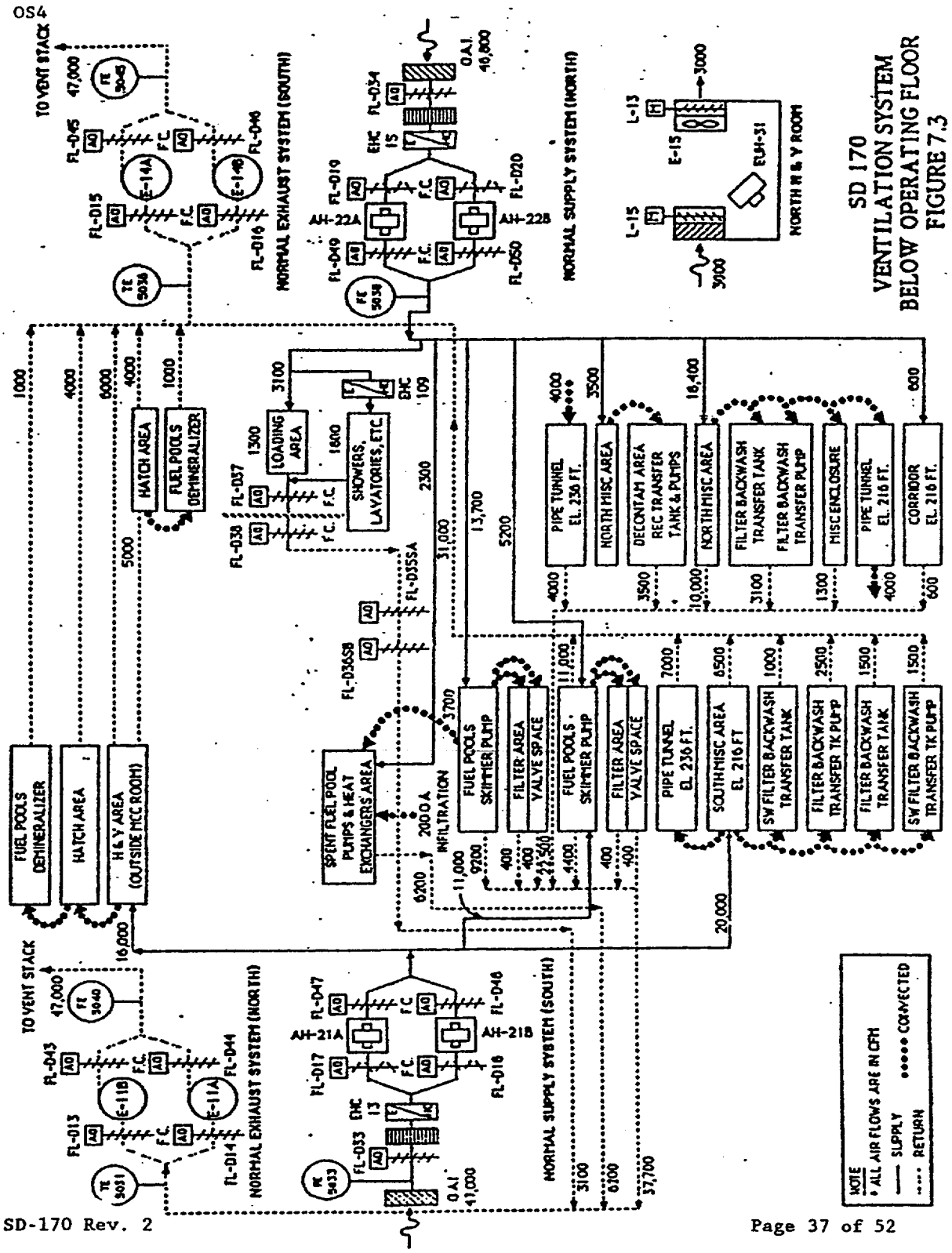

SD 170
VENTILATION SYSTEM
BELOW OPERATING FLOOR
FIGURE 7.3

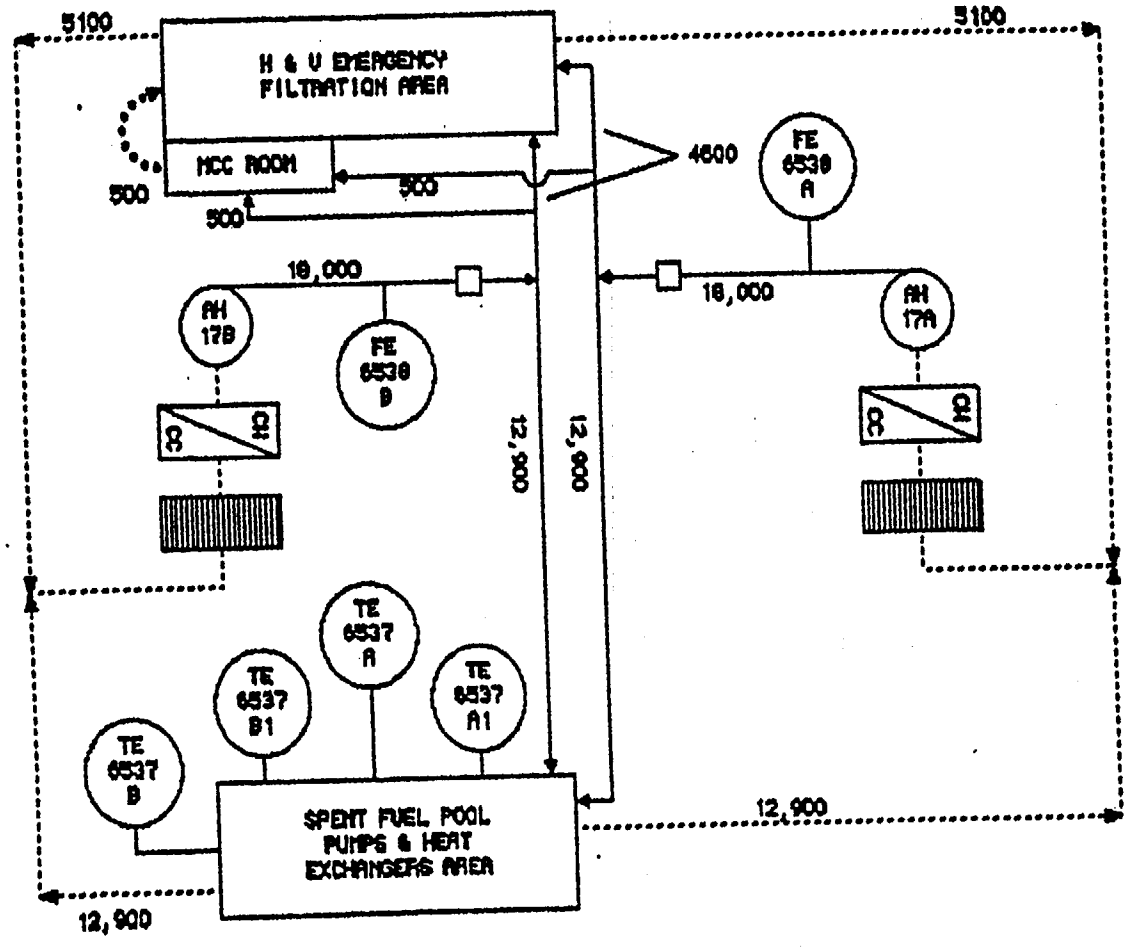

SD 170
SPENT FUEL POOL PUMP ROOM
VENTILATION SYSTEM
FIGURE 7.4

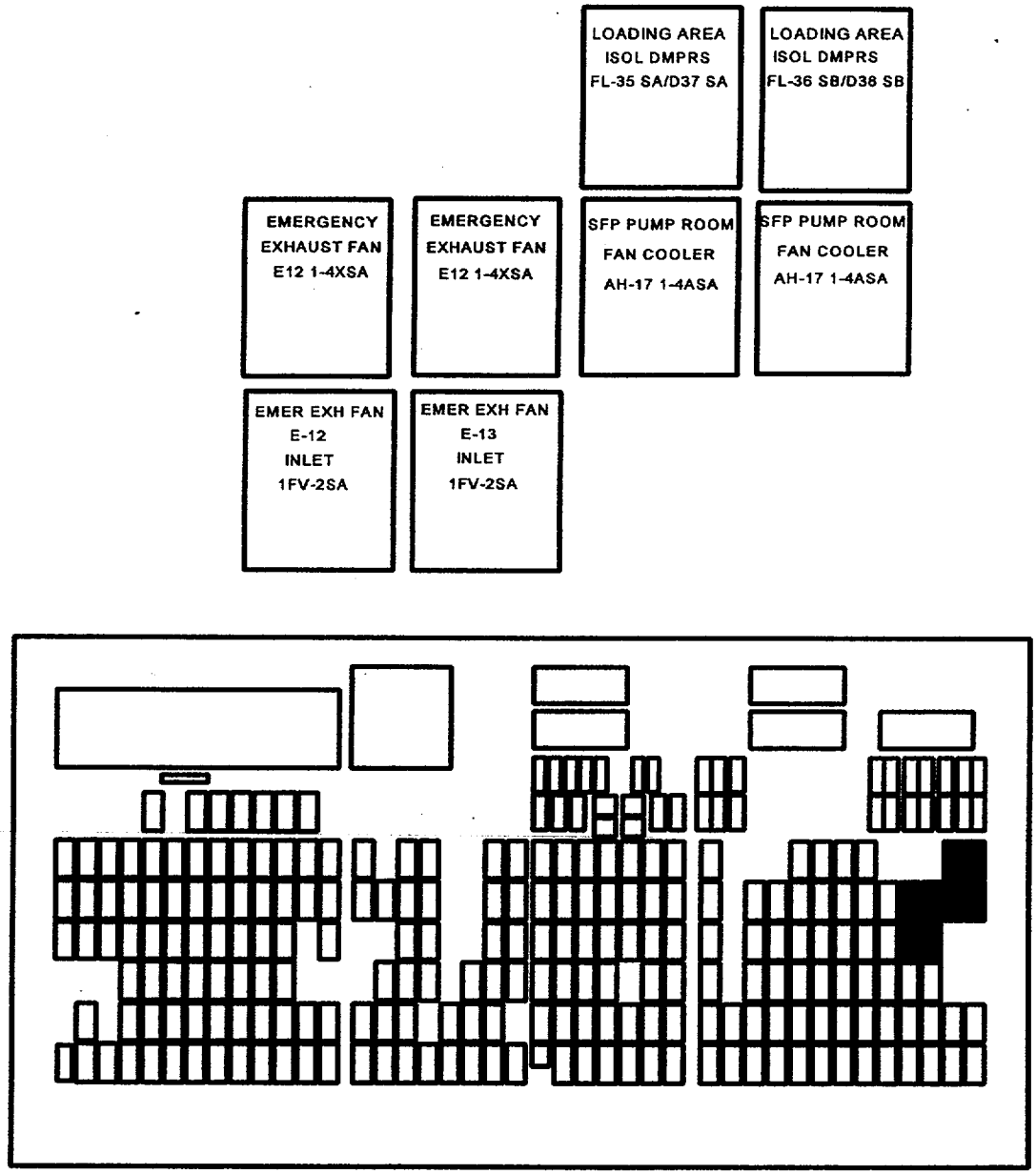

AEP-1 LOCATION

SD 170.
FHB HVAC AEP-1 CONTROLS.
FIGURE 7.5

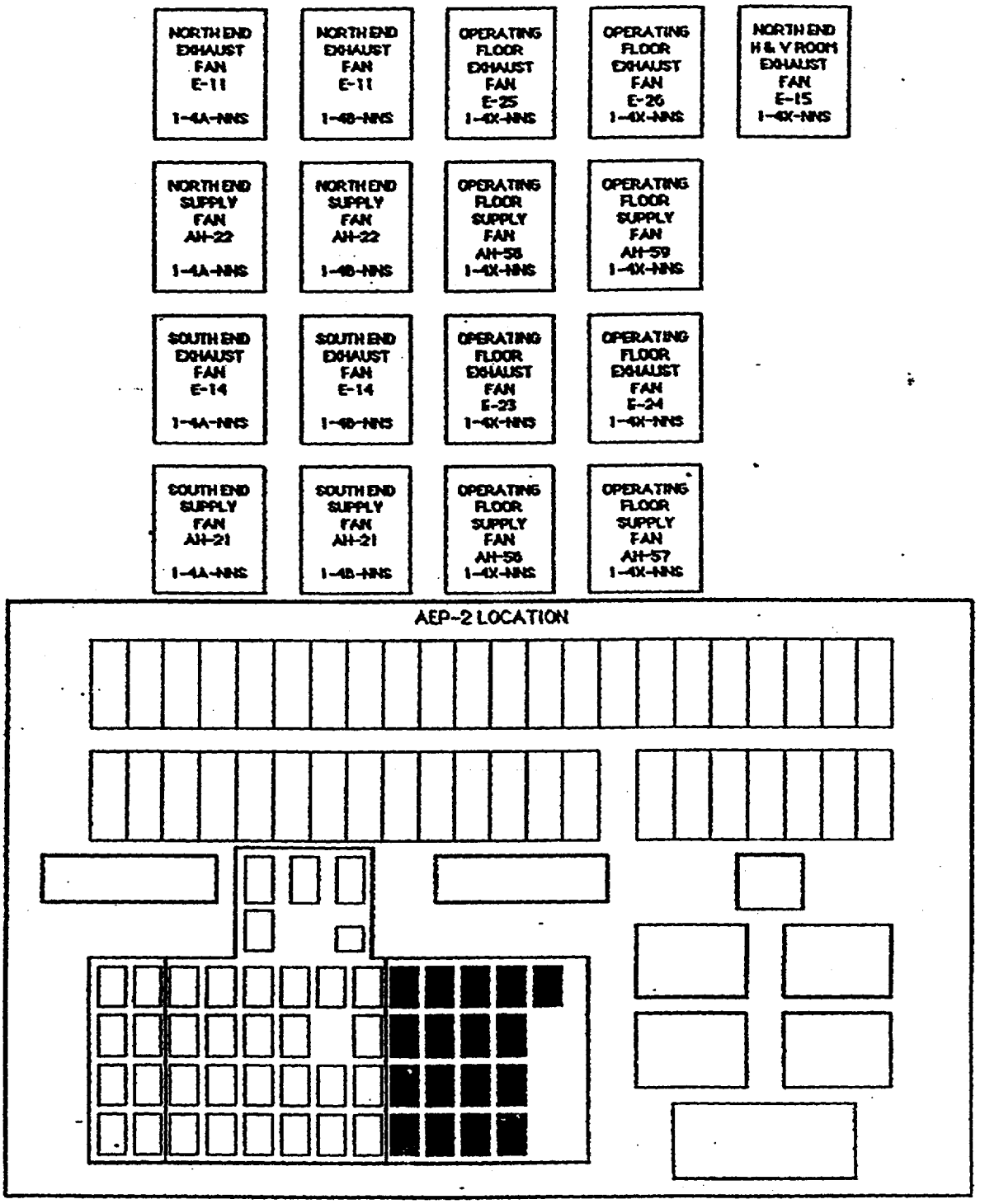

SD 170
FHB HVAC AEP-2 CONTROLS
FIGURE 7.6

8.0 REFERENCES

8.1 Drawings

Drawing No.	Title
CAR-2168 G-533	HVAC Air Flow Diagram Fuel Handling Bldg. Units 1&2
CAR-2165 G-022	General Arrangement FHB Plans Sheet 1
CAR-2165 G-023	General Arrangement FHB Plans Sheet 2
CAR-2165 G-024	General Arrangement FHB Sections Sheet 1
CAR-2165 G-025	General Arrangement FHB Sections Sheet 2
CAR-2165 G-026	General Arrangement FHB Sections Sheet 3
CAR-2165 B-432	Instrument List
CAR-2165 B-508	Setpoint Document (Info Only)

Control Wiring Diagrams (All CWD Nos. are CAR-2166 B-401)

Sht. 2841	Fuel Handling Building North H&V Rm Exhaust Fan E15 (1-4-NNS)
Sht. 2842	Fuel Handling Building North H&V Room Dampers L-13 (1-4X-NNS) & L-15 (1-4-NNS)
Sht. 2843	Fuel Handling Building Loading Area Isolation Dampers FL-D35SA-1-4 & FL-D37SA-1-4
Sht. 2844	Fuel Handling Building Loading Area Isolation Dampers FL-D36SB-1-4 & FL-D38SB-1-4
Sht. 2846	Fuel Handling Building Spent Fuel Ventilation Fan AH-17 (1-4A-SA)
Sht. 2849	Fuel Handling Building Spent Fuel Ventilation Fan AH-17 (1-4B-SB)
Sht. 2851	Fuel Handling Building Spent Fuel Instrumentation

8.1 Drawings (continued)

Sht. 2852	Fuel Handling Building North End Electric Unit Heater EHC-15 (1-4X-NNS) Sh. 2
Sht. 2853	Fuel Handling Building South End Electric Unit Heater EHC-13 (1-4X-NNS) Sh. 2
Sht. 2855	Fuel Handling Building Oper. Floor Dampers FL-D24-1-4 & FL-D52-1-4
Sht. 2856	Fuel Handling Building Oper. Floor Dampers FL-D26-1-4 & FL-D54-1-4
Sht. 2857	Fuel Handling Building North End Dampers FL-D19-1-4 & FL-D49-1-4
Sht. 2858	Fuel Handling Building North End Dampers FL-D20-1-4 & FL-D50-1-4
Sht. 2859	Fuel Handling Building South End Dampers FL-D15-1-4 & FL-D45-1-4
Sht. 2860	Fuel Handling Building South End Dampers FL-D16-1-4 & FL-D46-1-4
Sht. 2861	Fuel Handling Building Oper. Floor Exhaust Fan E-23 (1-4X-NNS)
Sht. 2862	Fuel Handling Building Oper. Floor Dampers FL-D27-1-4 & FL-D39-1-4
Sht. 2863	Fuel Handling Building Oper. Floor Exhaust Fan E-24 (1-4X-NNS)
Sht. 2864	Fuel Handling Building Oper. Floor Dampers FL-D28-1-4 & FL-D40-1-4
Sht. 2865	Fuel Handling Building Oper. Floor SA Isol. Dampers FL-D4SA-1-4 & FL-D8SA-1-4
Sht. 2866	Fuel Handling Building Oper. Floor SB Isol. Dampers FL-D4SB-1-4 & FL-D8SB-1-4
Sht. 2867	Fuel Handling Building Oper. Floor Supply Fan AH-56 (1-4X-NNS)
Sht. 2869	Fuel Handling Building Oper. Floor Electric Unit Heater EHC-90 (1-4X-NNS)

8.1 Drawings (continued)

Sht. 2870	Fuel Handling Building Oper. Floor Valves 7CX-W2006-1-4 & 7CX-W2007-1-4
Sht. 2871	Fuel Handling Building Oper. Floor Electric Preheat Coil EHC-89 (1-4X-NNS)
Sht. 2872	Fuel Handling Building Oper. Floor Supply Fan AH-57 (1-4X-NNS)
Sht. 2873	Fuel Handling Building Oper. Floor Electric Unit Heater EHC-92 (1-4X-NNS)
Sht. 2874	Fuel Handling Building Oper. Floor Electric Preheat Coil EHC-91 (1-4X-NNS)
Sht. 2875	Fuel Handling Building Oper. Floor Dampers FL-D23-1-4 & FL-D51-1-4
Sht. 2876	Fuel Handling Building Oper. Floor Exhaust Fan E-25 (1-4X-NNS)
Sht. 2877	Fuel Handling Building Oper. Floor Dampers FL-D-29-1-4 & FL-D41-1-4
Sht. 2878	Fuel Handling Building Oper. Floor Exhaust Fan E-26 (1-4X-NNS)
Sht. 2879	Fuel Handling Building Oper. Floor Dampers FL-D30-1-4 & FL-D42-1-4
Sht. 2880	Fuel Handling Building Oper. Floor Isol. Dampers FL-D21SA-1-4 & FL-D11SA-1-4
Sht. 2881	Fuel Handling Building Oper. Floor SB Isol. Dampers FL-D22SA-1-4 & FL-D12SB-1-4
Sht. 2882	Fuel Handling Building Oper. Floor Supply Fan AH-58 (1-4X-NNS)
Sht. 2883	Fuel Handling Building Oper. Floor Electric Unit Heater EHC-94 (1-4X-NNS)
Sht. 2885	Fuel Handling Building Oper. Floor Electric Preheat Coil EHC-93 (1-4X-NNS)
Sht. 2886	Fuel Handling Building Oper. Floor Supply Fan AH-59 (1-4X-NNS)

8.1 Drawings (continued)

Sht. 2887	Fuel Handling Building Oper. Floor Electric Unit Heater EHC-96 (1-4X-NNS)
Sht. 2888	Fuel Handling Building Oper. Floor Electric Preheat Coil EHC-95 (1-4X-NNS)
Sht. 2889	Fuel Handling Building Oper. Floor Dampers FL-D25-1-4 & FL-D53-1-4
Sht. 2890	Fuel Handling Building North End Exhaust Fan E-11 (1-4A-NNS)
Sht. 2891	Fuel Handling Building North End Supply Fan AH-22 (1-4A-NNS)
Sht. 2892	Fuel Handling Building North End Dampers FL-D14-1-4 & FL-D44-1-4
Sht. 2893	Fuel Handling Building North End Exhaust Fan E-11 (1-4B-NNS)
Sht. 2894	Fuel Handling Building North End Supply Fan AH-22 (1-4B-NNS)
Sht. 2895	Fuel Handling Building North End Dampers FL-D13-1-4 & FL-D43-1-4
Sht. 2896	Fuel Handling Building North End Electric Unit Heater EHC-15 (1-4X-NNS) Sh. 1
Sht. 2897	Fuel Handling Building South End Exhaust Fan E-14 (1-4A-NNS)
Sht. 2898	Fuel Handling Building South End Supply Fan AH-21 (1-4A-NNS)
Sht. 2899	Fuel Handling Building South End Dampers FL-D17-1-4 & FL-D47-1-4
Sht. 2900	Fuel Handling Building South End Exhaust Fan E-14 (1-4B-NNS)
Sht. 2901	Fuel Handling Building South End Supply Fan AH-21 (1-4B-NNS)
Sht. 2902	Fuel Handling Building South End Dampers FL-D18-1-4 & FL-D48-1-4
Sht. 2903	Fuel Handling Building South End Electric Unit Heater EHC-13 (1-4X-NNS) Sh. 1

8.1 Drawings (continued)

Sht. 2904	Fuel Handling Building South End Damper FL-D33-1-4
Sht. 2913	Fuel Handling Building Emer. Exhaust Radiation Monitoring SA
Sht. 2914	Fuel Handling Building Emer. Exhaust Radiation Monitoring SB
Sht. 2915	Fuel Handling Building Emer. Exhaust Fan E-12 (1-4X-SA)
Sht. 2916	Fuel Handling Building Emer. Exhaust Fan E-13 (1-4X-SB)
Sht. 2918	Fuel Handling Building Emer. Exhaust Inlet Valve 1FV-2SA-1-4
Sht. 2919	Fuel Handling Building Emer. Exhaust Inlet Valve 1FV-4SB-1-4
Sht. 2920	Fuel Handling Building Emer. Exhaust Charcoal Detection Unit
Sht. 2921	Fuel Handling Building Emer. Exhaust Charcoal Detection Unit
Sht. 2922	Fuel Handling Building Emer. Exhaust Electric Unit Heater EHC-17 (1-4X-SA)
Sht. 2923	Fuel Handling Building Emer. Exhaust Electric Unit Heater EHC-17 (1-4X-SA)
Sht. 2925	Fuel Handling Building Emer. Exhaust System Vortex Dampers Control
Sht. 2926	Fuel Handling Building Shower Lavatories Reheater EHC-109 (1-4X-NNS)
Sht. 2931	Fuel Handling Building Emer. Exhaust Instrumentation Sh. 1
Sht. 2932	Fuel Handling Building Emer. Exhaust Instrumentation Sh. 2

8.1 Drawings (continued)

Sht. 2933	Fuel Handling Building Emer. Exhaust Instrumentation Sh. 3
Sht. 2935	Fuel Handling Bldg. Cask Decon. System Dampers FL-D55-1-4, & FL-D56-1-4, FL-D57-1-4
Sht. 2936	Fuel Handling Bldg. Cask Decon. System Damper FL-D58-1-4
Sht. 2937	Fuel Handling Bldg. Cask Decontamination Exhaust Fan E-84 (1-4X-NNS)
Sht. 2938	FHB Clothing Change Area in Decontamination Storage Pit Exh. Fan E-43 (1-4X-NNS)

Instrument Schematics & Logic Diagrams (all Nos. are CAR-2166 B-430)

Sht. 31.52A	Fuel Handling Building Normal Exhaust Fan E-11 (1-4A-NNS) (North End)
Sht. 31.52B	FHB Normal Supply Fan AH-21 1-4A-NNS) (South End)
Sht. 31.52C	FHB Exhaust System (North) Fans E-11 (1-4A-NNS) and E-11 (1-4B-NNS) HVAC Scheme "R-1"
Sht. 31.52D	FHB Supply System (South) Fans AH-21 (1-4A-NNS) and AH-21 (1-4B-NNS) HVAC Scheme "R-1"
Sht. 31.52E	FHB Normal Exhaust Dampers FL-D13-1-4 and FL-D43-1-4
Sht. 31.53A	Fuel Handling Building Normal Exhaust Fan E-11 (1-4B-NNS) (North End)
Sht. 31.53B	FHB Normal Supply Fan AH-21 (1-4B-NNS) (South End)
Sht. 31.53C	FHB Normal Exhaust Dampers FL-D14-1-4 and FL-D44-1-4
Sht. 31.54A	Fuel Handling Building Normal Exhaust Fan E-14 (1-4A-NNS) (South End)

8.1 Drawings (continued)

Sht. 31.54B	FHB Normal Supply Fan AH-22 (1-4A-NNS) (North End)
Sht. 31.54C	FHB Exhaust System (South) Fans E-14 (1-4A-NNS) and E-14 (1-4B-NNS) HVAC Scheme "R-1"
Sht. 31.54D	FHB Supply System (North) Fans AH-22 (1-4A-NNS) and AH-22 (1-4B-NNS) HVAC Scheme "R-1"
Sht. 31.54E	FHB Normal Exhaust Dampers FL-D15-1-4 and FL-D45-1-4
Sht. 31.55A	Fuel Handling Building Normal Exhaust Fan E-14 (1-4B-NNS) (South End)
Sht. 31.55B	FHB Normal Supply Fan AH-22 (1-4B-NNS) (North End)
Sht. 31.55C	FHB Shower Lavatories Clothes Change Rm Zone Reheater EHC-109 (1-4X-NNS)
Sht. 31.55D	FHB Normal Supply Outside Air Dampers FL-D34-1-4 and FL-D50-1-4
Sht. 31.55E	FHB Normal Exhaust Dampers FL-D16-1-4 and FL-D46-1-4
Sht. 31.56A	FHB Normal Exhaust Fan E-23 (1-4X-NNS) (Oper. Fl.)
Sht. 31.56B	FHB Normal Supply Fan AH-56 (1-4X-NNS) (Oper. Fl.)
Sht. 31.56C	FHB Normal Supply Fan AH-56 (1-4X-NNS) (Oper. Fl.)
Sht. 31.56D	FHB Exhaust System (Oper. Fl.) Fan E-23 (1-4X-NNS) and E-24 (1-4X-NNS) HVAC Scheme "R-2"
Sht. 31.56E	FHB Supply System (Oper. Fl.) Fans AH-56 (1-4X-NNS) and AH-57 (1-4X-NNS) HVAC Scheme "R-2"
Sht. 31.56F	FHB Loading Area Isolation Dampers FL-D35-SA-1-4 & FL-D37SA-1-4

8.1 Drawings (continued)

Sht. 31.56G	FHB Loading Area Isolation Dampers FL-D36-SB-1-4 & FL-D38-SB-1-4
Sht. 31.56H	FHB Loading Area HVAC Scheme "R"
Sht. 31.57A	FHB Normal Exhaust Fan E-24 (1-4X-NNS) (Oper. Fl.)
Sht. 31.57B	FHB Normal Supply Fan AH-57 (1-4X-NNS) (Oper. Fl.)
Sht. 31.57C	FHB Normal Supply AH-57 (1-4X-NNS) (Oper. Fl.)
Sht. 31.58A	FHB Normal Exhaust Fan E-25 (1-4X-NNS) (Oper. Fl.)
Sht. 31.58B	FHB Normal Supply Fan AH-58 (1-4X-NNS) (Oper. Fl.)
Sht. 31.58C	FHB Normal Supply Fan AH-58 (1-4X-NNS) (Oper. Fl.)
Sht. 31.58D	FHB Exhaust System (Oper. Fl) Fans E-25 (1-4X-NNS) and AH-59 (1-4X-NNS) HVAC Scheme "R-2"
Sht. 31.58E	FHB Supply System (Oper. Fl.) Fans AH-58 (1-4X-NNS) and AH-59 (1-4X-NNS) HVAC Scheme "R-2"
Sht. 31.59A	FHB Normal Exhaust Fan E-26 (1-4X-NNS) Oper. Fl.
Sht. 31.59B	FHB Normal Supply Fan AH-59 (1-4X-NNS) (Oper. Fl.)
Sht. 31.59C	FHB Normal Supply Fan AH-59 (1-4X-NNS) (Oper. Fl.)
Sht. 31.60A	FHB Emergency Exhaust System Exhaust Fan E-12 (1-4X-SA)
Sht. 31.60B	FHB Emergency Exhaust System Fan E-12 (1-4X-SA) Inlet Valve
Sht. 31.60D	FHB Emergency Exhaust System E-12 (1-4X-SA) Heating and Filtration
Sht. 31.60E	FHB Emerg. Exhaust Fan E-12 (1-4X-SA) HVAC Scheme "S"

8.1 Drawings (continued)

Sht. 31.60F	FHB Emerg. Filtration System Train "A" HVAC Scheme "S"
Sht. 31.60H	FHB Emergency Exhaust Sys Vortex Damper of Exhaust Fan E-12 (1-4X-SA)
Sht. 31.61A	FHB Emergency Exhaust System Fan E-13 (1-4X-SB)
Sht. 31.61B	FHB Emergency Exhaust System Fan E-13 (1-4X-SB) Inlet Valve
Sht. 31.61D	FHB Emergency Exhaust System E-13 (1-4X-SB) Heating and Filtration
Sht. 31.61E	FHB Emergency Exhaust Fan E-13 (1-4X-SB) HVAC Scheme "S"
Sht. 31.61F	FHB Emerg. Filtration System Train "B" HVAC Scheme "S"
Sht. 31.61H	FHB Emerg. Exhaust System Vortex Damper of Exhaust Fan E-13 (1-4X-SB)
Sht. 3162	FHB Spent Fuel Pool Pump Room Vent. Scheme "GG"
Sht. 31.62A	FHB Spent Fuel Pool Pump Room Ventilation Fan AH-17 (1-4A-SA)
Sht. 31.62B	FHB Spent Fuel Pool Pump Room Chilled Water Valve 3CX-W19 SA-1-4
Sht. 31.62C	FHB Spent Fuel Pool Pump Room Supply Valve 3CH-V130 SA-1 and Return Valve 3CX-V113 SA-1
Sht. 31.63	FHB Spent Fuel Pool Pump Room Vent. Scheme "GG"
Sht. 31.63A	FHB Spent Fuel Pool Pump Room Ventilation Fan AH-17 (1-4B-SB)
Sht. 31.63B	FHB Spent Fuel Pool Pump Room Chilled Water Valve 3CX-W26 SB-1-4

8.1 Drawings (continued)

Sht. 31.63C	FHB Spent Fuel Pool Pump Room Supply Valve 3Ch-V87 SB-1 and Return Valve 3CX-V112 SB-1
Sht. 31.220	FHB North H&V Room Area Exhaust Fan E-15 (1-4X-NNS) Clothing Change Area in Decontamination Storage Pit E-43 (1-4X-NNS)
Sht. 31.221	FHB North H and V Room Area Outlet Damper L-13 (1-4X-NNS) and Inlet Damper L-15 (1-4X-NNS)
Sht. 31.222	FHB North H and V Room Area HVAC Scheme "R-5", FHB Clothing Area in Decontamination Storage Pit E-43 (1-4X-NNS) HVAC Scheme "R-4"
Sht. 31.239	FHB Associated Normal System Cask Decontamination System HVAC Scheme R-6
Sht. 31.239A	FHB Cask Decontamination Exhaust Fan, E-84 (1-4X-NNS)
Sht. 31.239B	FHB Cask Decontamination System Discharge Damper FL-D58-1-4 Area Outlet Damper FL-D57-1-4, Enclosure Outlet Damper FL-D55-1-4, Enclosure Intake Damper FL-D55-1-4

Power Distribution and Motor Data Sheets (All Nos. are CAR-2166-B-041)

Sht. 68	480 V General Service Bus 1-4A102
Sht. 69	480 V General Service Bus 1-4B102
Sht. 85	480 V General Service Bus 1-4A1
Sht. 90	480 V General Service Bus 1-4B1
Sht. 177S01	480 V MCC 1&4A33-SA
Sht. 183S01	480 V MCC 14B33-SB
Sht. 203S01	480 V MCC 1-4A11
Sht. 227S02	480 V MCC 1-4A1021
Sht. 228S01	480 V MCC 1-4A1022

8.1 Drawings (continued)

Sht. 231S01	480 V MCC 1-4B11
Sht. 231S02	480 V MCC 1-4B11
Sht. 254S01	480 V MCC 1-4B1021
Sht. 254S02	480 V MCC 1-4B1021
Sht. 255S02	480 V MCC 1-4B1022
Sht. 633	208/120 V Power Panel PP-1-4B1-212

8.2 Specifications

Specification No.	Title
BE-07	Air Handling Units
BE-08	Air Handling Units (NS) ESF
BE-13	Centrifugal Fans
BE-22	Electrical Heating Coils
BE-23	Electric Unit Heaters, NNS
BE-24	Louvers, NNS
BE-25	Dampers
BE-31	Air Cleaning Units (NNS & ESF)
BE-35	HVAC Butterfly Valves
E-12	Aux. Motors

8.3 Technical Manuals

Motors, Repairs & Replacement	IJY	Reliance Electric Company
Fans	ORU	Westinghouse
Temperature Detection Unit	MIP	Alison Control, Inc.
Air Cleaning Units	OTV	CTI - Nuclear

8.3 Technical Manuals (continued)

Fans, Centrifugal	OTX	Brod and McClung-Pace Company
Louvers	FGR	The Airolite Company
Dampers	OSA	Ruskin Mfg. Company
Electric Heating Coils	OSB	Brasch Mfg. Company
Electric Heater Unit & Control Panel	PUX	Brasch Mfg. Company
HVAC Butterfly Valves	MEF	BIF
Blowers	BJD	Barry Blower Company
Motors	IJV	Westinghouse
Cooling Coils	ORZ	Aerofin
Filter, Flanders	FBM	Balston
Vortex Damper Actuator	FBG	ITT General Hydramotor

8.4 System Design Basis Document

DBD #135 Fuel Handling Building and Waste Processing Building HVAC Systems

8.5 Miscellaneous

FSAR Section
6.5.1 Engineered Safety Feature (ESF) Filter Systems
7.3.1.3.4 Emergency Exhaust System
7.3.1.5.11 Spent Fuel Pool Pump Room Ventilation System
7.5.1.4.11.2 Fuel Handling Building Emergency Exhaust System
7.5.1.4.12 Spent Fuel Pool Pump Room Ventilation System
9.4.2 Spent Fuel Pool Area Ventilation System

Calculations
9-FHB-1 Fuel Handling Building Ventilation System for spaces below operating floor
9-FHB-2 Fuel Handling Building Air Conditioning System for the Spent Fuel Pools and Operating Floor
9-FHB-3 Fuel Handling Building - Areas served by AH-17
9-SAC-2A Fuel Handling Building Emergency Exhaust System

Environmental Qualification
Report NUC-9 Reliance Electric Company

PCR - 7014

REVISION SUMMARY

Revision 6

Section 2.2- Deleted reference to the cross connected duct and butterfly valve. These components were abandoned in place as per ESR 97-00737.

Section 3.2.4- Deleted reference to butterfly valve 3FV-B5SN. This component was abandoned in place per ESR 97-00737.

Figure 7.2- Deleted cross connected duct and butterfly valve between the two emergency exhaust units and included the blanked off duct per ESR 97-00737.

CAROLINA POWER & LIGHT COMPANY

SHEARON HARRIS NUCLEAR POWER PLANT

DESIGN BASIS DOCUMENT

RESIDUAL HEAT REMOVAL SYSTEM

DBD-105

REVISION	DATE	PREPARED BY	INDEPENDENT REVIEW BY	APPROVED BY
0	02/10/87	F.Heyden/D.Shaw	E. Rainero	M. Gagliardi
1	03/29/93	A.R. Stalker	C.R.Williams	A. M Worth
2	03/10/97	A. M. Worth	C.R.Williams	E. Northeim
3	01/15/98	C.R.Williams	V. Rascoe	A. M. Worth
4	~~12/07/99~~ 12/20/99	L. F. Costello Larry Costello	A.M. Worth A M Worth	A. Morisi A. M. Morisi

Avira 12/20/99

RECEIVED
DEC 29 1999
HNP
DOCUMENT CONTROL

4/4

FORWARD

The Harris Nuclear Power Plant Design Basis Documents (DBDs) are intended to provide an accurate, accessible and clearly defined understanding of the system design bases to maintain the configuration of the plant consistent with the current design basis of the plant. The primary user will be the responsible engineer. Additional personnel expected to use this document for design basis reference would include Harris Engineering Support Section (HESS), Licensing, and Regulatory Affairs personnel.

To provide consistency in the content of the HNP DBDs, a system's design basis is defined to consist of:

1. System Functional Requirements
2. Regulatory Requirements/Commitments Relative to System Design
3. Original Design Codes/Standards of Record (unless clearly superseded by a regulatory commitment to a later code/standard).

Clarification on certain aspects of the system, information that does not meet the definition of design basis may be included in this document.

This document is not intended to replace existing design documents (i.e. calculations, analyses etc), rather it is a road map to assist the user in determining what information is applicable in order to fully evaluate the potential impact of questions or changes to the design. The HNP DBDs are written with extensive use of references to supplement the document text. Prior to changing any design information in the DBD, the user should review all related references to assure an understanding of the context from which the reference was extracted. The inclusion of information subject to frequent revision has been intentionally limited in this document. This document cover's only "key" components possessing one or more of the following:

1. Unique regulatory requirements/commitments
2. A function within the system design that is not intuitively obvious
3. Procurement requirements derived from a specific application within the system design.

Industry issues such as Environmental Equipment Qualification (EQ) and Regulatory Guide 1.97, as well as topics such as shielding and ALARA, are common to multiple systems. Specific system design requirements imposed by such "generic issues" are often complex and are addressed in separate generic issue design basis documents or within a respective program manual. The generic issue documents or programs are referenced, as appropriate, within this design basis document.

TABLE OF CONTENTS

Section		Page
1.0	**INTRODUCTION**	**5**
	1.1 System Description	5
	1.2 System Boundaries	5
	1.3 System Interfaces	6
	1.4 Definitions, Abbreviations, and Acronyms	7
2.0	**REGULATORY IMPOSED DESIGN REQUIREMENTS**	**8**
	2.1 Regulatory Criteria	8
	2.2 Codes and Standards	14
3.0	**SYSTEM DESIGN REQUIREMENTS**	**15**
	3.1 Instrumentation and Control	15
	3.2 Electrical	15
	3.3 Mechanical	16
	3.4 Civil/Structural	16
	3.5 Materials/Chemistry	17
	3.6 General System Requirements	17
4.0	**COMPONENT DESIGN REQUIREMENTS**	**17**
	4.1 Pumps	17
	4.2 Valves	17
	4.3 Piping	18
	4.4 Instrumentation & Control	18
	4.5 Electrical	19
	4.6 Heat Exchangers	20
	4.7 Containment Sump	20
5.0	**DESIGN MARGIN**	**21**
6.0	**DOCUMENT REFERENCE LIST**	**22**
	6.1 Codes and Standards	22
	6.2 Drawings	23
	6.3 Specifications	25
	6.4 Calculations	27
	6.5 Modifications	29
	6.6 Regulatory	29
	6.7 Correspondence	30

6.8 Regulatory Guides 32
6.9 Other NRC Documents 34
6.10 Ebasco Correspondence 35
6.11 Westinghouse Correspondence 36
6.12 CP&L Internal Correspondence 37
6.13 Other Supporting Documentation 37
6.14 Vendor Technical Manuals 38

1. 0 INTRODUCTION

This section presents general information for users of the Residual Heat Removal (RHR) Design Basis Document. This information is for background and is not design basis.

1.1 System Description

The RHR System provides for the dissipation of heat from the Reactor Coolant System (RCS) during periods of plant operation after the RCS pressure has been reduced to a nominal value. Heat in the RCS is generated by radiological decay of the reactor core, the pressurizer heaters, and reactor coolant pump operation. (Ref.: 6.8.14, 6.9.2.1.1)

The RHR System shall be capable of reducing RCS temperature to cold shutdown utilizing a single train, with or without offsite power, within a reasonable period to support reactor shutdown. (Ref.: 6.8.14, 6.9.2.1.1).

Portions of the RHR System shall be capable of removing containment heat. Refer to Containment Spray DBD-106 for additional information on CS requirements.

The RHR System shall be capable of providing low pressure emergency core cooling injection following pressure reduction . Refer to the Safety Injection DBD-104 for additional information on SIS requirements.

This DBD will not include the specific information relative to the Safety Injection mode of operation as this is the subject of DBD-104.

1.2 System Boundaries

This section provides the overall scope of the RHR System and establishes boundaries to meet that scope.

> CAUTION:When performing modifications to the RHR System, the effect on boundary systems should be reviewed.

The boundary between the RHR System and the RWST is the final isolation (exclusive) valve of the RWST. (Ref.: 6.2.2.1, 6.2.2.2).

The boundary between the RHR System and the RCS is the last check valve in each hot leg injection line (inclusive) and the motor operated isolation valve at the hot leg connection (inclusive). (Ref.: 6.2.2.1, 6.2.2.2).

The boundary between the RHR System and the HHSI System is the MOV at the CSIP suction and the last check valve in each low pressure injection line. (Ref.: 6.2.2.1, 6.2.2.2).

The boundary between the RHR System and the CCW System is the heat exchanger tubes. The water in the heat exchanger tubes belongs to the RHR System. (Ref.: 6.2.2.1, 6.2.2.2).

The boundary between the RHR System and the Containment is the Containment Recirculation Sump (inclusive). (Ref.: 6.2.2.1, 6.2.2.2).

The boundary between the RHR System and the ESFAS is the contacts in each actuation relay(exclusive), and the RWST level transmitters (exclusive). (Ref.: 6.2.6.1).

The boundary between the RHR System and the Plant Electrical Distribution System serving RHR System components is the load circuit breaker, fuse or knife switch (inclusive) for each individual circuit. (Ref.: 6.2.7.1).

1.3 System Interfaces

This subsection identifies those systems which either "provide support to" (i.e., supporting systems) or "are supported by" (i.e., supported system) the HR System. The discussion will describe the function provided by or to the interfacing system and will identify the design basis parameters as associated with the interface.

1.3.1 Supporting Systems

1.3.1.1 Compressed Air System (CAS)

The Instrument Air Subystem (IAS) of the Compressed Air System shall provide motive force for operation of air operated valves in the RHR System. Refer to DBD-133 for information on the requirements of the CAS/IA System.

1.3.1.2 Plant Electrical Power Distribution System

The Electrical Power Distribution System shall provide power for operation of the RHR System with or without offsite power. Refer to DBD-202 for information on the requirements of the PEPD System.

1.3.1.3 Component Cooling Water System (CCW)

The CCW System shall provide sufficient shell side flow to each RHR System heat exchanger to match the heat duty specified. A small portion of the component cooling water flow is also utilized for cooling the RHR System pump cooler and seal cooler. Refer to DBD-131 for information on the requirements of the CCW System.

1.3.1.4 Reactor Auxiliary Building (RAB) HVAC System

The RAB HVAC System shall provide area cooling for the RHR Pump Area El. 190'. Served by AH-5. Refer to DBD-137 for information on the requirements of the requirements of the RAB HVAC Systems. (Supported by calculation 9-RAB-7CS)

1.3.1.5 Engineered Safety Features Actuation System (ESFAS)

The ESFAS initiates the RHR System to mitigate the consequences of design basis accident within a specified time frame defined as that time interval from when the monitored parameter exceeds its ESF Actuation Setpoint at the channel sensor until the ESF equipment is capable of performing its safety function. Refer to DBD-313 for information on the requirements of the Time Response bases.

1.3.2 Supported Systems

1.3.2.1 Safety Injection System (SIS)

The RHR System shall provide additional NPSH to the Charging/Safety Injection Pumps. (Ref.: 6.13.1.4) Refer to DBD-104 for information on the requirements of the

Safety Injection System.

1.3.2.2 Reactor Coolant System (RCS)

The RHR System shall be capable of providing flow to the RCS for cooldown, normal heat removal in shutdown conditions and safety injection following LOCA. (Ref.: 6.13.1.2) Refer to DBD-100 for information on the requirements of the RCS System

1.3.2.3 Chemical and Volume Control System (CVCS)

The RHR System shall provide additional NPSH to the Charging/Safety Injection Pumps. (Ref.: 6.13.1.4). Refer to DBD-103 for information on the requirements of the CVCS System. (Ref.: 6.13.1.3)

1.3.2.4 Containment Spray (CSP)

The RHR pumps have a common suction line with the Containment Spray System connected to the RCS loop hot leg. Refer to DBD-106 for information on the requirements of the CS System. (Ref.: 6.13.1.5)

1.3.2.5 Refueling Storage Facility

The RHR pumps are used to transfer borated water between the refueling water storage tank and the reactor cavity. Suction or discharge alignment to the reactor cavity is attained through the normal flow paths when the reactor vessel head has been lifted clear of the flange mating surface. The RHR system provides an adequate cooling medium for spent fuel transfer . Refer to DBD-109 for information on the requirements of the Fuel Handling System.

1.3.2.6 Containment Isolation System

The lines from the RCS hot legs to the RHR pump suctions each contain two remote manual (motor operated) valves to serve as the boundary between the RCS pressure and the design pressure of the RHR system. This valve arrangement is provided in accordance with Westinghouse Systems Standard Design Criteria, Number 1.14, Revision 2 and Appendix B of ANSI Standard N271-1976. Refer to DBD-108 for additional information. (Ref.: 6.13.1.6)

1.3.2.7 Emergency Response Facility Information System (ERFIS)

The RHR System shall provide capability to monitor RHR pump performance during midloop operations. Pump differential pressure is monitored in the Main Control Room and the ERFIS computer. For Additional information on the requirements of the ERFIS System refer to DBD-307.

1.4 Definitions, Abbreviations, and Acronyms

1.4.1 Definitions

Hot Standby- Design Basis safe shutdown condition of the RCS when the Reactor

Coolant System is greater than 350° F and RCS pressure between 2000 and 2250 psig. (Mode 3)

Mid-Loop Operation- operation in a shutdown condition, between the top and centerline of the hot leg, below which vortexing or air entrainment will occur resulting in a loss of RHR. (Ref.: 6.4.1.6, 6.4.4.3)

1.4.2 Abbreviations and Acronyms

The following is a list of abbreviations and acronyms used in this document:

EDBS	Equipment Data Base System
GDC	General Design Criteria (10CFR50 Appendix A)
HNP	Harris Nuclear Plant (formerly SHNNP)
NUREG	Nuclear Regulation Guideline
NUMARC	Nuclear Management and Resource Council, Inc.
NEI	Nuclear Energy Institute (formerly NUMARC)
SRP	Standard Review Plan (NUREG 0800)
USI	Unresolved Safety Issue

2. 0 REGULATORY IMPOSED DESIGN REQUIREMENTS

2.1 Regulatory Criteria

The following is a listing of regulatory requirements that are applicable, in part or entirely, specifically to the Residual Heat Removal System which have resulted in system changes or which are tied to actual commitments. It is not a complete listing of all HNP regulatory requirements. In the cases where only a certain section of the requirement is design basis, that section is specified. A reference to one requirement does not indicate commitment with the entire current requirement.

2.1.1 Code of Federal Regulations, Title 10 part 50

2.1.1.1 Inservice Inspection requirements described in 10CFR50.55a(f)

The design of the HNP systems shall include provisions to meet the Inservice Inspection Requirements described in 10CFR50.55a(f), as applicable for plants with construction permits issued after January 1, 1971 (HNP construction permit was issued January 27, 1978) (Ref.:6.9.2).

Compliance to 10 CFR 50.55a(f) for the RHR System is described in the submittals for the Inservice Inspection Criteria for the current interval, for the Inservice Inspection (ISI) Program for Shearon Harris Nuclear Power Plant. (Ref.: 6.7.1.25)

2.1.1.2 Inservice Testing requirements described in 10CFR50.55a(g)

The design of the HNP systems shall include provisions to meet the Inservice Testing requirements described in 10CFR50.55a(g), as applicable for plants with construction permits issued after January 1, 1971 (HNP construction permit was issued January 27, 1978) (Ref.: 6.9.2).

Compliance to 10 CFR 50.55a(g) for the RHR System is described in the submittals for the Inservice Testing Criteria for the current interval, for the Inservice Testing (IST) Program for Shearon Harris Nuclear Power Plant . (Ref.: 6.7.1.25, 6.13.3.3)

2.1.1.3 Appendix A GDC 34 – "Residual Heat Removal"

Compliance:

General Design Criterion 34 is met via transferring fission product decay heat and other residual heat from the reactor core at a rate such that specified acceptable fuel design limits are not exceeded, with suitable redundancy, leak detection, isolation capability, and power sources to ensure system safety function can be accomplished, assuming a single failure. (Ref.: 6.9.2).

2.1.1.4 Appendix A GDC 35, "ECCS".

Compliance:

For information on the requirements of the ECCS function of the RHR System, refer to DBD-104 "Safety Injection" (Ref.: 6.13.1.4)

2.1.1.5 Appendix A GDC 55, "Reactor Coolant Pressure Boundary Penetrating Containment"

Compliance:

All HNP piping penetrations meet the intent of GDC 55, 56, and 57. In doing so, they also conform to the intent that all piping systems penetrating the Containment are provided with containment isolation capabilities. Each line that penetrates primary reactor containment and is either part of the reactor coolant pressure boundary or connects directly to the containment atmosphere is provided with one of the following valve arrangements conforming to the requirements of GDC 55, as follows:

One locked closed isolation valve inside and one locked closed isolation valve outside containment, or

One automatic isolation valve inside and one locked closed isolation valve outside containment, or

One locked closed isolation valve inside and one automatic isolation valve outside containment; a simple check valve is not used as the automatic isolation valve outside Containment; or

One automatic isolation valve inside and one automatic isolation valve outside containment; a simple check valve is not used as the automatic isolation valve outside Containment.

An exception of General Design Criteria (GDC) 55 is taken for the HNP RHR

suction lines. The lines from the RCS System hot legs to the RHR pump suctions each contain two remote manual (motor operated) valves, which are locked closed during normal plant power operation and are under administrative control to assure that they cannot be inadvertently opened. The valves are interlocked such that they cannot be opened when the RCS pressure is greater than the design pressure of the RHR system. This valve arrangement is provided in accordance with original Westinghouse Systems Standard Design Criteria, Number 1.14, Revision 2 and Appendix B of ANSI Standard N271-1976 as described in FSAR and SRP Section 6.2.4 for Containment Isolation Systems and approved per the HNP SER (Ref.: 6.9.2.1.2). Refer to DBD-108 for information on the Containment Isolation System (Ref.: 6.13.1.6) and the HNP IST submittals. (Ref.: 6.7.1.26)

2.1.1.6 Appendix A GDC-56, "Primary Containment Isolation"

The lines that penetrate the Containment and communicate directly with both the atmosphere inside and outside of the Containment are of two types . The first type communicates directly with the atmospheres inside and outside of Containment, i.e., the atmosphere purge line. The second type encompasses those penetrations for non-nuclear safety class lines penetrating the Containment, i.e., service air, fire protection, etc.

As stated in GDC 56, two isolation valves, one inside and one outside Containment, are required in lines which penetrate the Containment and connect directly to the containment atmosphere. However, GDC 56 allows for alternatives to these explicit isolation requirements where the acceptable basis for each alternative is defined. The following are alternatives to explicit conformance with GDC 56 for the RHR System.

Compliance:

The HNP RHR System shall meet the requirements of GDC 56 with the exception that the lines from the containment recirculation sumps to the suctions of the RHR pumps are provided with motor operated gate valves enclosed in valve chambers that are leaktight at containment design pressure. Each line from the containment sump to the valve is enclosed in a separate concentric guard pipe which is also leaktight. A seal is provided so that neither the chamber nor the guard pipe is connected directly to the containment sump or to the containment atmosphere. This design arrangement is provided in accordance with original Westinghouse Systems Standard Design Criteria Number 1.14, Revision 2 and Appendix B of ANSI Standard N271-1976 as described in FSAR and SRP Section 6.2.4 for Containment Isolation Systems and approved per the HNP SER (Ref.: 6.9.2.1.2). Refer to DBD-108 for information on the Containment Isolation System (Ref.: 6.13.1.6) and the HNP IST submittals (Ref.: 6.7.1.26).

2.1.2 Regulatory Guides

2.1.2.1 RG 1.139 Guidance for Residual Heat Removal to Achieve and Maintain Cold Shutdown (Ref.: 6.8.12)

The RHR System was reviewed against the intent of the requirements of RG 1.139 applicable to HNP for plants whose construction permit application was docketed after January 1, 1978. This includes isolation capability of the suction and discharge sides, and overpressure protection of the suction piping. RHRS relief valve stuck open shall discharge fluid inside containment to the pressurizer relief tank and fluid discharged outside containment will go to the boron recycle holdup tank. (Ref.:6.8.12)

This RG did not specifically apply to HNP because of its vintage; however, the RHR System was reviewed against the intent of the requirements of RG 1.139. The HNP construction permit, CPPR-158, was issued on January 27, 1978, but the application was docketed on September 11, 1970. HNP reviewed the criteria as a Class 2 plant. The RG reviewed was the "for comment" version. In accordance with NUREG/CR-2883, the NRC integrated the issue with USI-A-45 "Shutdown Decay Heat Removal Requirements". HNP has reviewed compliance with the Regulatory Guide and shall comply with the exception that the safe shutdown basis is "hot standby". For details of compliance refer to FSAR Chapter 1.8, also refer to BTP RSB 5-1 compliance (Ref.: 6.7.1.27, 6.9.1.1) and submittal of IPEEE and subsequent completion of USI A-45 (Ref.: 6.7.1.16, 6.7.1.17)

2.1.2.2 RG 1.75 Physical Independence of Electric Systems

The requirements of RG 1.75 to provide channel independence by electrical and physical separation shall apply to the RHR System. (Ref.: 6.9.2)

2.1.3 USNRC Generic Letters (GL)

2.1.3.1 Generic Letter 82-33, "Supplement 1 to NUREG-0737- Requirements for Emergency Response Capability", (Ref.:6.9.4.1)

The RHR System shall provide output to the Safety Parameter Display System in accordance with item I.D.2. (Ref.: 6.7.1.8)

2.1.3.2 Generic Letter 87-12, "Loss of Residual Heat Removal While the Reactor Coolant System is Partially Filled" (Ref.: 6.9.4.1)

The RHR System performance shall be capable of being monitored from the control room during mid-loop operation to quickly respond to a loss of RHR in the shutdown mode. (Ref.: 6.7.1.11)

2.1.3.3 Generic Letter 88-17, "Loss of Decay Heat Removal" (Ref.:6.9.4.3)

The RHR System performance shall be capable of being monitored from the control

room during mid-loop operation including flow rate, pump suction and discharge pressures and pump amperage. (Ref.: 6.7.1.13, 6.4.1.6,) HNP's response included a modification to add RHR pump differential pressure indication (Ref. 6.5.3) and pump vibration monitoring (Ref. 6.5.4).

2.1.3.4 Generic Letter 88-20. "Individual Plant Examination (IPE) For Severe Accident Vulnerabilities - 10 CFR 50.54(f)", Also, GL 88-20, Supplement 4, "Individual Plant Examination of External Events (IPEEE) For Severe Accident Vulnerabilities" (Ref.: 6.9.4.4) For additional information on the PSA Models of record, refer to DBD-314 and the PSA

Licensees were asked to perform systematic examination to identify any plant-specific vulnerabilities to severe accidents and reported results to the NRC. Initially this review was for internally generated events such as flooding and in Supplement 4 expanded to externally generated events (IPEEE) such as Seismic. etc. HNP performed a systematic Probablistic Safety Assessment (PSA) and Probabilstic Risk Assessment (PRA) examination to identify any plant-specific vulnerabilities to severe accidents and reported results to the NRC which included the RHR System.

The HNP RHR System function for supporting low pressure safety injection to the RCS in the event of LOCA and long term decay heat removal was reviewed in Appendix A- System Models. Specifically discussed is the operator burden associated with the "Semi-automatic" switchover of the ECCS from injection to recirculation and the expectation of long term shutdown cooling function. (Ref.: 6.7.1.16, 6.7.1.17)

2.1.3.5 Generic Letter 89-10, "Safety-Related Motor-Operated Valve Testing and Surveillance" (Ref.: 6.9.4.5)

The RHR System at HNP will comply with the intent of the Generic Letter 89-10, as responded with the exceptions noted in HNP Submittals and maintained in the HNP MOV Program. (Ref.:6.13.3.1). Specific component design requirements applicable to this program and supporting analyses are presented in Section 4.0.

2.1.3.6 Generic Letter 97-04, "Assurance of Sufficient Net Positive Suction Head for Emergency Core Cooling and Containment Heat Removal Pumps" (Ref.: 6.9.4.7)

This applies to pumps that take suction from the containment sump following a design-basis loss-of-coolant accident (LOCA) or secondary line break used in "piggyback" operation that are necessary for cooling of the reactor core and containment.

The RHR System takes suction from the Containment Sumps during the recirculation phase. HNP will comply with the intent of the Generic Letter 97-04, as responded with the exceptions noted in HNP Submittal. (Ref.: 6.7.1.23, 6.7.1.24, 6.7.2.7)

2.1.3.7 Generic Letter 98-02. "Loss of Reactor Coolant Inventory and Associated Potential for Loss of Emergency Mitigation Functions While in a Shutdown Condition" (Ref.:6.9.4.8)

Procedures, processes and training shall be in place to preclude the cross-connection

of hot leg RHR/RCS fluid to the ECCS Suction Line from the RWST. (Ref.: 6.7.1.25)

2.1.4 Branch Technical Position (BTP)

The BTPs herein are associated with NUREG-0800 and represent solutions and approaches that are published as acceptable to the staff, but are not required as the only possible solution and approaches. The following BTPs have docketed commitments applicable to the design of the HNP RHR System.

2.1.4.1 BTP-RSB-5-1, " Design Requirements of the Residual Heat Removal System" (Attached to Standard Review Plan NUREG 0800 Section 5.4.7)

PWRs shall have systems capable of taking the RCS from normal operating conditions to cold shutdown and satisfying GDC 1 through 5. This includes using safety-grade systems, with redundancy to accomplish assuming a single failure, with or without offsite power, with leak detection, with isolation capabilities, operable from a central control room, and within a reasonable time period.

Per the BTP Section H, "Implementation", HNP is a Class 2 plant with a Construction Permit Application docketed before January 1, 1978 (docketed 9/15/1971) and with expectation of receiving an Operating License on or after January 1, 1979. (Ref.: 6.7.1.27, 6.9.1)

Implementation at HNP is consistent with the intent of Regulatory Guide 1.139 with the exception that HNP safe shutdown design basis is hot standby. (See Section 2.1.2.1). Two of the four key functions required to achieve and maintain cold shutdown are circulation and heat removal. These are provided by the RHR pumps and heat exchangers following cooldown by high pressure means until the Residual Heat Removal System initiation of low pressure condition is met. (Ref.: 6.9.1, 6.9.2)

2.1.4.2 BTP-EICSB-18, "Application of the Single Failure Criterion to Manually-Controlled Electrically-Operated Valves" (Attached to Standard Review Plan NUREG 0800, Appendix 8A)

The BTP states, in part, that where a single failure in an electrical system can result in loss of capability to perform a safety function, the effect on plant safety must be evaluated. The BTP provides acceptable resolution of disconnecting power to components of a fluid system as a means of designing against such a single failure.

The RHR System at HNP shall meet the requirements of BTP-EISCSB-18 to require that power be locked out of Cold Leg Injection Valves 8888 A and B with the valves in the open position and Valve 8889 with the valve in the closed position. (Ref.: 6.9.1.2) This assures that the ECCS flow path remains aligned during power operation. Refer to the FSAR 7.3.2, 7.6.2 for additional details.

2.1.4.3 BTP-EICSB-20, "Design of Instrumentation and Controls Provided to Accomplish Change over from Injection to Recirculation Mode". (Attached to Standard Review Plan NUREG 0800, Appendix 7A)

The RHR System at HNP shall meet the requirements of BTP-EICSB-20. (Ref.: 6.8.14) Refer to the FSAR Chapters 6.3.2, 7.3.2 for additional details.

2.1.5 NUREG

2.1.5.1 NUREG 0800, Revision 1 "Standard Review Plan for the Review of Safety Analysis Reports for Nuclear Power Plants"

The RHR System is reviewed against the intent of Sections 3.6.1, 5.4.7, 6.2.2, 6.3 regarding the capability to support performance requirements. (Ref.: 6.9.2.1)

2.1.5.2 NUREG-0869, Revision 1 "Unresolved Safety Issue A-43 Regulatory Analysis"

The containment recirculation sumps are designed and constructed to ensure the functional capability of the sumps to provide an adequate supply of water during the recirculation mode of operation for the RHR System. In addition, the containment recirculation sumps have been evaluated against the guidelines provided in NUREG-0869 (Ref.: 6.6.1.2, 6.7.1.10, 6.8.16). This evaluation concluded that post-LOCA insulation debris will not degrade either the performance of the containment sumps or that of the RHR pumps. Refer to DBD-106 for additional information on the Containment Sumps.

2.2 Codes and Standards

The following is a listing of codes and standards that are applicable, in part or entirely, to the Residual Heat Removal System and which are tied to actual commitments. In the cases where only a certain section of the standard is design basis, that section is specified. A reference to one section of a standard does not indicate commitment with the entire standard. Codes and standards that are utilized for good engineering practice, but are not required to meet the design basis may be found in Sections 3 & 4 or in the component specifications.

2.2.1 ASME Section III 1971, "Nuclear Power Plant Components" (Ref.: 6.1.4.1)

All Safety Class 1 portions of the RHR System piping and components are evaluated to the requirements of ASME Section III under NB3600 rules. Edition and all addenda through Summer 1979. Safety Class 2 portions of the RHR System are analyzed to NC-3600 requirements. (Ref.: 6.11.11,)

RHR System Pumps and Heat Exchangers are designed to the ASME Section III, 1971 edition through Summer 1972. (Ref.: 6.11.3, 6.11.5)

2.2.2 IEEE Standard 317-1983

Penetration heat loss calculation shows that various conductor sizes within a single penetration are below the maximum allowable heat dissipation. This limits the nozzle concrete interface temperature to 120° F in accordance with IEEE Standard 317-1983 and Drawings CAR 1364-4289, 4290, and 4291. (Ref.: 6.4.3.1)

3. 0 SYSTEM DESIGN REQUIREMENTS

3.1 Instrumentation and Control

The RHR System shall be capable of operation from the Main Control Room with adequate instrumentation to provide readiness of the ECCS Function. (Ref.: 6.9.2.1.3) See DBD-104 and compliance with GDC 19.

The RHR System automatically switches to the recirculation mode by opening the RHR pump suction valves from the containment recirculation sump and discharge to the Reactor Coolant System when the RWST level decreases to Lo-Lo in 2/4 channels in conjunction with an "SI" signal. (Ref.: 6.4.3.4)

Completion of the swapover to the recirculation phase is accomplished by manual operator action isolating the RWST. (Ref.: 6.9.2.1.3)

Operations shall be able to monitor RHR pump performance during midloop operations. Pump differential pressure is monitored in the Main Control Room and the ERFIS computer. Any degradation of pump performance (air ingestion, suction valve closure, shaft shear, etc.) will be easily detectable through low differential pressure annunciation provided in the Main Control Room (ALB-4). (Ref. 6.2.7.1)

Means are provided to detect credible leaks originating within the RHR System compartment or in adjacent compartments where a flow path to the RHR System pump compartment exists in the ECCS flow path assuming a single failure. (Ref.: 6.6.2.12, 6.6.1.2).

The RCS Wide Range Pressure instruments that are used as the source signal for the RHR Inlet Isolation Valve Interlocks are located in the RAB (El 236 ft.) in a non-harsh environment. This location does not subject the transmitters to an environment that could cause an adverse impact on the instrument uncertainty. These transmitters are of different vendors in order to provide a diverse principle interlock for the inlet isolation valves of the RHR system. (Ref. 6.2.4.3)

3.2 Electrical

The Residual Heat Removal System is supplied by Class 1E 480-V power and 120-V power for control. (Ref. 6.2.7.1)

Electrical power and control cables for the system are sized in accordance with SHNPP Unit 1 Electrical Design Criteria Nos. 8, 9, 17, 18, 19, 20, and 21 and calculations in accordance with DBD-202.

The power supply, electrical equipment location, control, instrument and cable routing shall be designed such that a single failure will not preclude the operation and isolation of the RHR System. (Ref.: 6.8.15.1) Refer to DBD-202 for additional information on the requirements of the design of the Plant Electrical Distribution System.

The RHR System shall be capable of reducing RCS temperature to cold shutdown utilizing a single train, with or without offsite power, within a reasonable period to support reactor shutdown. (Ref.: 6.6.1.1)

3.3 Mechanical

The RHR System shall provide adequate flow and heat removal capability for the dissipation of waste heat from the RCS during periods of plant operation after the RCS pressure has been reduced to a nominal value of less than 425 psig. (Ref.: 6.9.1, 6.8.15.1, 6.9.2.1.1). Refer to DBD-104, "Safety Injection".

3.3.1 Safety Injection Phase

Portions of the RHR System are used as part of the ECCS to provide low head safety injection to the RCS cold legs during the injection phase following a loss of coolant accident (LOCA). (Ref.: 6.8.15.1, 6.9.2.1.1, 6.9.2.1.3,)

The RHR System discharge shall be capable of alignment to provide suction to the Charging Pumps for water supply during high head recirculation (Ref.: :6.8.14, 6.9.2.1.1, 6.9.2.1.3). Manual action is required by the operators to isolate the RWST from the pump suction and to align the CVCS charging pump suction to the RHR pump discharge. (Ref.:6.6.1.2)

3.3.2 Recirculation Phase

Portions of the RHR System are used to provide long term cooling during the recirculating phase following a LOCA. (Ref.:6.8.14, 6.9.2.1.1, 6.9.2.1.3)

The RHR discharge shall be capable of alignment to provide hot-leg injection during long term recirculation mode to prevent boron precipitation in the reactor core. (Ref.:6.8.14, 6.9.2.1.1, 6.9.2.1.3)

A single RHR Pumps shall be capable of providing adequate flow during the recirculation phase. (Ref.: 6.4.1.12, 6.4.3.5)

3.3.3 Refueling

During refueling operations, the RHR System pumps are also used to transfer water between the refueling water storage tank and the reactor cavity. (Ref.:6.8.14, 6.9.2.1.3)

3.4 Civil/Structural

All components of the RHR System are contained within the Reactor Auxiliary Building and Containment Structure and are bounded by the HNP's design parameters for external events such as tornado, wind, flood and missiles as stated in the original FSAR as submitted and accepted by the NRC. (Ref.: 6.8.15.1, 6.9.2)

All Safety Class 1 portions of the RHR System piping and components are evaluated to the requirements of ASME B&PV Code Section III and are qualified for operation after a safe shutdown earthquake (SSE). (Ref.: 6.11.8) Refer to DBD-002 for information on the requirements of the methodology of analysis for SSE, Operational Basis Earthquake (OBE) and Design Basis Earthquake (DBE).

The RHR pumps are arranged and adequately shielded by concrete walls so that access to a faulted pump and maintenance on that pump can be performed within an adequate time frame while the second pump is operating. (Ref.: 6.8.15.2)

3.5 Materials/Chemistry

Due to water chemistry requirements, all RHR System component surfaces wetted with reactor coolant are austenitic stainless steel. Surfaces exposed to component cooling water are carbon steel

Connections are provided for collecting a grab sample of the water in the RHR System to verify the water chemistry, as needed.

3.6 General System Requirements

All RHR system piping and components are constructed to the requirements of ASME B&PV Code Section III and are qualified for operation after a design basis earthquake. Piping end connections are welded except for the components required to be removed for maintenance are flanged. Refer to Section 2.2 for code of record discussion.

4. 0 COMPONENT DESIGN REQUIREMENTS

4.1 Pumps

The RHR System pumps are designed to provide sufficient flow to achieve the heat capacity with sufficient head to overcome system resistance due to piping, the RHR System heat exchanger, and the reactor core.

The RHR pumps will operate on minimum flow recirculation on an automatic start signal until the RCS pressure decreases to below the shutoff head of the RHR pump. (Ref.: 6.4.3.4)

To prevent RHR System pump from overheating or vibration due to cavitation which results from dead heading, a miniflow return line is provided from the downstream side of each residual heat exchanger to the pump suction lines with motor-operated valves. A flow-indicating switch is provided in the pump discharge line to detect low flow and to open the miniflow valve. The miniflow valve will close automatically when the flow returns to normal (above minimum pump flow).

The RHR System pumps shall retain functional capability during the long-term recirculation cooling phase assuming an active or passive failure following a LOCA. The pumps are located in a separate, shielded compartment such that each is protected against all credible leaks originating within the residual heat removal compartment or in adjacent compartments where a flow path to the RHR System pump compartment exists. These failures shall be detectable and evaluated for adequacy of required response time to isolate. (Ref.: 6.6.2.12, 6.8.15.2) The current licensing basis credible leak source is a malfunctioning pump seal and is based on handling leaks up to a maximum of 50 gpm that can be detected and isolated in 30 minutes. (Ref.: 6.6.1.1, 6.6.1.3, 6.9.2.1.3, 6.11.16)

See DBD-104 for RHR Pump Design Parameters.

4.2 Valves

The valves requiring manual operation to attain the recirculation phase shall be interlocked to prevent out-of-sequence actuation. (Ref.: 6.6.1.2)

Check valves protect the discharge piping from RCS pressure and open to allow the pumps to perform their safety function. These check valves shall be testable while the plant is on line (Ref.: 6.9.2.1.1). The RHR valving shall be capable of providing adequate protection from overpressurization when the RCS is at high pressure. Refer to DBD-104 for information on the requirements of the Safety Injection mode.

The RHR System inlet isolation valves shall have the capability to attain lockout of electrical power to the valves. Position indication switches shall not be affected. (Ref.: 6.4.4.2, 6.7.2.3, 6.11.15)

Operation of the RHR System continues until the reactor coolant exceeds 325 ° F and 400 psig at which time the operator may shut down the system. The isolation valves will cause an alarm in the main control room if not closed and Reactor Coolant System pressure exceeds 425 psig for 15 seconds. (Ref. 6.5.1, 6.2.4.3)

4.3 Piping

Repair or replacement of RHR System piping originally constructed to ASME Section III, Code Class 1, 2,or 3 shall follow the requirements set forth in the HNP Repair and Replacement Program. (Ref.: 6.13.3.2)

4.4 Instrumentation & Control

The RHR pumps will automatically start in the event of a Safety Injection Signal (SI). (Ref.: 6.2.6.1)

Instrumentation shall be provided to allow the operators to monitor RHR temperature, pressure, and flow during all operating modes. A temperature detector is provided upstream and downstream of the heat exchanger to monitor the performance by recording the temperature in the Control Room. (Ref.: 6.2.9.10)

Instrumentation for measuring reactor containment recirculation sump level and temperature, which are required only for operator information, are qualified for submergence due to their location. Refer to DBD-104 for information on the requirements of the Safety Injection mode and DBD-106 for additional information on the Containment Sump.

Interlocks shall be provided in order to prevent inadvertent opening of the RHR System inlet isolation valves unless RCS pressure is less than a nominal value of 450 psig and isolation valves between RHR to Charging Safety Injection Pump (CSIP) and RWST to RHR System are closed. This interlock prevents overpressurization of the CSIP suction line and post-accident fluid flow to RWST, respectively. (Ref.: 6.2.6.1)

Interlocks shall be provided to prevent inadvertent opening of the RHR to CSIP suction valve (8706) during the recirculation mode. The interlock assures it cannot be opened unless one of the two RHR System inlet isolation valves is closed and the alternate CSIP miniflow paths isolation valves are closed. These valves are interlocked to prevent post-accident recirculation fluid to the RWST. (Ref.: 6.2.6.1)

The RHR System inlet isolation valves cause an alarm in the main control room if not

closed when RCS pressure exceeds the setpoint for a specified period. (Ref.:6.5.1) Since in each loop both the RHR System inlet isolation valves are fed from the diverse train power sources, the isolation valves cannot be opened when required upon loss of one train power source. Therefore, the inside missile barrier valves 1-RH-02SB (8702A) in Loop 1 and outside missile barrier valve 1-RH-501SA (8701B) in Loop 3 can be fed from the alternative source, i.e., upon loss of Train B power source, valve 1-RH-502SB can be fed from Train A power source or upon loss of Train A power source, valve 1-RH-501SA can be fed from Train B power source. By providing the alternate power feed, at least one RCS loop can be utilized when pressure reaches a nominal value of 450 psig. The suction isolation valve position indication switches are not affected by lockout of electrical power to the valves. (Ref.: 6.2.7.1, 6.4.4.2, 6.7.2.3)

During alternate feed, the valves are controlled from the crossed loop control switch which require manual action for the power switchover. While operating in this mode, the precaution shall be made such that corresponding CSIP suction valve (8706) and RHR-RWST suction valve (8809) in the loop are closed.

To avoid thermal shock during initial start-up of the RHR Heat Exchanger, a bypass flow control valve is provided which is controlled by a flow controller. When the RHR Heat Exchanger outlet valves are gradually opened to meet the appropriate RCS cooldown rate, the bypass valves will modulate towards the closed position in order to maintain the predetermined RCS return flow.

In order to provide Operations with parameters indicative of RHR pump performance during midloop operations, pump differential pressure is monitored in the Main control Room and the ERFIS computer. Any degradation of pump performance (air ingestion, suction valve closure, shaft shear, etc.) will be easily detectable through low differential pressure annunciation provided in the Main control Room (Ref.: 6.5.3, 6.7.1.12, 6.9.4.1, 6.9.4.3).

4.5 Electrical

The RHR pump motor is protected from starting against low bus voltage that could cause damage due to high current.

In the event of loss of electrical power, the RHR System pumps and suction valves will be powered from the Emergency Diesel Generators 1A-SA and 1B-SB. (Ref. 6.2.7.1)

If there is a failure to an electrical power train, a RHR System flow path can be maintained during long-term post LOCA cooling by enabling the RHR System suction valve to be transferred from its normal power supply to an alternate Class 1E power supply by specific operator actions outside the Control Room if there is a failure to an electrical power train. This also applies to a Train B suction valve. A detailed description of the electrical connections for this operation is provided in DBD-202

Electrical equipment in the RHR System shall be capable of direct connection to the electrical distribution system. The RHR System is supplied by Class 1E 480-V power and 120-V power for control.

The RHR System pump electrical power is provided from an ESF power supply (480-V Emergency Buses 1A2-SA and 1B2-SB located in RAB EL. 286'). (Ref.: 6.2.6.1, 6.2.7.1)

The electrical power to the RHR System isolation Valves 1-RH-V-501- SA-1 and 1-RH-V-500-SB-1 are powered from 480-volt MCCs 1A21-SA and 1B21-SB, respectively, located in the RAB EL 286'. (Ref.: 6.2.6.1, 6.2.7.1)

Electrical power and control cables for the RHR System are sized in accordance with SHNPP Unit No. 1 ORIGINAL Electrical Design Criteria Nos. 8, 9, 17, 18, 19, 20, and 21 and calculations in accordance with DBD-202.

The cable and raceway system for the RHR System is designed in accordance with SHNPP Unit No. 1, ORIGINAL Design Criterion Nos. 3 and 4. Refer to DBD-200 for general requirements for electrical equipment, cable, and raceway.

4.6 Heat Exchangers

Each of the RHR System heat exchangers is sized to remove one-half of the heat generated within the Reactor Coolant System due to nuclear decay and reactor coolant pump operation at the conditions expected 20 hours following reactor shutdown from an extended run at full power. Assuming shutdown from an extended run provides for the maximum amount of fissionable decay products of uranium in the reactor core. (Ref.: 6.4.1.11, 6.4.1.4)

Selection of 20 hours following shutdown as a design point provides the minimum temperature differential for heat transfer at the heat exchanger. (Ref.: 6.11.8)

Two 100 percent heat exchangers are not required since operation with only one RHR System heat exchanger will result in an RCS temperature rise to a higher temperature plateau where the temperature differential with the CCW System can compensate for the loss of the second heat exchanger. The exchanger size determined with the above assumptions is then applied to other plant operating modes, when a greater temperature differential is available, and the resultant (much higher) heat duties are utilized in shutdown and accident analyses. These confirm that each RHR System heat exchanger provides 100 percent of the heat transfer required for accident conditions, thereby providing the system redundancy required by 10CFR50.46 and Appendix A. Shutdown analysis confirms that operation of one RHR System heat exchanger is sufficient to achieve cold shutdown. (Ref.: 6.4.1.13)

The CCW and RHR Heat Exchanger overall heat transfer coefficients were calculated using a Tech Spec maximum Service Water temperature of 95 ° F. (Ref.: 6.4.1.11)

Refer to DBD-104 for RHR Heat Exchanger Design Parameters

4.7 Containment Sump

4.7.1 Consistent with USI A-43, the containment sump shall be analyzed for: (1) hydraulic performance under post-LOCA adverse conditions resulting from potential vortex formation and air ingestion and subsequent pump failure. (2) the possible transport of large quantities of LOCA-generated insulation debris resulting from a pipe break to the sump debris screen(s), and the potential for sump screen blockage to reduce net positive suction head (NPSH) margin below that required for the recirculation pumps to maintain long-term cooling. (3) the capability of RHR System pumps to continue pumping when subjected to possible air, debris, or other effects such as particulate

ingestion on pump seal and bearing systems. (Ref.: 6.7.1.10, 6.8.10, 6.8.17, 6.7.1.24)

4.7.2 The Containment sump shall have a vortex suppressor consisting of horizontal floor grating over the inlets to eliminate air entraining vortices. As determined by the sump evaluation report, a vortex suppressor grating at elevation of 218.5 ft. was added during the construction of the plant. (Ref.: 6.7.1.10, 6.7.1.24).

Refer to Containment Spray DBD-106 for information on the Containment Sump parameters.

5. 0 DESIGN MARGIN

5.1.1 Water Inventory available in Mid-Loop Operation

5.1.1.1 Per HNP response to GL 88-17, "Loss of Decay Heat Removal" (See section 2.1.3.3) The RHR System performance shall be based on the available margin of RCS inventory identified in the Safety Analyses associated with the definition of a "Loss of RHR". The amount of inventory in gallons of water determines the time available to react to this scenario and is therefore a direct measure of the vulnerability to loss of inventory. (Ref.: 6.7.1.13)

6. 0 DOCUMENT REFERENCE LIST

6.1 Codes and Standards

6.1.1 AISC

6.1.1.1 AISC 1963, Specification for Design Fabrication, and Erection of Structural Steel for Buildings

6.1.1.2 AISC, 8th Ed., Specification for Design Fabrication, and Erection of Structural Steel for Buildings

6.1.2 ANS

6.1.2.1 ANS-3.3-1982, Security For Nuclear Power Plants

6.1.3 ANSI

6.1.3.1 ANSI B31.1.0-1967, Power Piping

6.1.3.2 ANSI N18.7-1976, Administrative Controls and Quality Assurance for the Operational Phase of Nuclear Power Plants

6.1.3.3 ANSI N45.2.4-1972, Installation, Inspection, and Testing Requirements for Instrumentation and Electrical Equipment During the Construction of Nuclear Generating Stations

6.1.3.4 ANSI N45.2.8-1975, Supplementary Quality Assurance Requirements for Installation, Inspections, and Testing of Mechanical Equipment and Systems for the Construction Phase of Nuclear Power Plants

6.1.3.5 ANSI N45.2.10-1973, Quality Assurance Terms and Definitions

6.1.3.6 ANSI N45.2.11-1974, "Quality Assurance Requirements for the Design of Nuclear Power Plants"

6.1.3.7 ANSI N271-1976, Appendix B, "

6.1.4 ASME

6.1.4.1 ASME Section III , "Nuclear Power Plant Components", 1971 Edition through Summer 1972

6.1.4.2 ASME Section III, "Nuclear Power Plant Components., 1986 Edition

6.1.5 IEEE

6.1.5.1 IEEE-279-1971, Criteria for Protection Systems for Nuclear Power Generating

Systems

6.1.5.2 IEEE 308-1971, Class 1E Electric Systems for Nuclear Power Generating Stations

6.1.5.3 IEEE 317-1976, Electrical Penetration Assemblies in Containment Structures for Nuclear Power Generating Stations

6.1.5.4 IEEE 323-1971, IEEE Standard for Qualifying Class 1E Equipment for Nuclear Power Generating Stations

6.1.5.5 IEEE 323-1974, IEEE Standard for Qualifying Class 1E Equipment for Nuclear Power Generating Stations

6.1.5.6 IEEE 344-1971, Guide for Seismic Qualification of Class 1E Electrical Equipment

6.1.5.7 IEEE 344-1975, Guide for Seismic Qualification of Class 1E Electrical Equipment

6.2 Drawings

6.2.1 General Arrangement

6.2.1.1 CAR-2165-G-016 RAB Plan at EL 236.0 ft.

6.2.1.2 CAR-2165-G-017 RAB Plan at EL 261.0 ft.

6.2.1.3 CAR-2165-G-019 RAB Plan at EL 190 and 216 ft.

6.2.2 Flow Diagrams

6.2.2.1 CAR-2165-G-810 Safety Injection System, Sheet 3

6.2.2.2 CAR-2165-G-824 Residual Heat Removal System (PSAR 9.4)

6.2.2.3 CAR-2165-G041 Flow Sheet Legend

6.2.3 RHR System Drawings

6.2.3.1 CAR-2165-G135

6.2.3.2 CAR-2165-G136

6.2.3.3 CAR-2165-G137

6.2.4 Project Lists

6.2.4.1 CAR-1364-B-069 Valve and Specialty List (Contained within EDBS database)

6.2.4.2 CAR-1364-B-070 Piping Line List (Contained within EDBS database)

6.2.4.3 CAR-2166-B-432 Instrument List

6.2.4.4 CAR-2166-B-508 Setpoint Document

6.2.4.5 CAR-2166-B-043 Cable and Conduit List

6.2.5 RHR System Piping diagrams

6.2.5.1 CAR-2165-G-151 RHR and SI Piping, RAB Plan at EL 190 and 216 ft

6.2.5.2 CAR-2165-G -152 RHR and SI Piping, RAB Plan at EL 236 ft

6.2.5.3 CAR-2165-G-153 RHR and SI Piping, RAB Plans and Sections

6.2.5.4 CAR-2165-G-154 RHR and SI Piping, Containment Building Plan SH 1

6.2.5.5 CAR-2165-G-155 RHR and SI Piping, Containment Building Plan SH 2

6.2.5.6 CAR-2165-G-156 RHR and SI Piping, Containment Building Partial Plans and Sections

6.2.6 Power Distribution and Motor Data Sheets

6.2.6.1 CAR-2166-B-041 Sheets 126, 131, 172S01, 173S01, 175S03, 178S01, 178S02, 179S02, 181S03, 604, 674,678, 680, 681, 684

6.2.6.2 CAR-2166-G030 480-V Auxiliary One Line

6.2.7 Control Wiring Diagrams

6.2.7.1 CAR-2166-B-401 Sheets 321 through 340, 1469, 1470, 1476

6.2.8 Containment Building Electrical Penetration Schedule

6.2.8.1 CPL-2166-S-2045 Sheets S1227 (Sheet 3 of 11), S1230(Sheet 1 of 3) S1235 (Sheets 1 and 2 of13)

6.2.9 Low-Voltage Relay Settings

6.2.9.1 CPL-2166-S-0301 Sheets 51, 52, 55, 56

6.2.10 EMDRAC List Primary system drawings

6.2.10.1 PO S020506 RHR Pumps

6.2.10.2 PO S021000 RHR Heat Exchangers

6.2.10.3 PO S021004 RHR Heat Exchangers

6.2.10.4 PO S022000 Valves

6.2.10.5 PO S028500 W RHR Flow Diagram

6.2.10.6 PO S032000

6.2.10.7 1364-002038 Residual Heat Exchangers

6.2.10.8 1364-002960 Pump Motor Data

6.2.10.9 1364-003605 Original Pump Performance Curve for HNP Unit 1

6.2.10.10 1364-001328 (S29, S38, S39, S40) NSSS Process Control Block Diagrams

6.2.10.11 1364-052579 Westinghouse Precautions, Limitations, and Setpoint Document

6.2.10.12 1364-096534, "Table 2.18 "ESF Low Head Safety Injection" (superceded by DBD-314 as Siemens Power Corporation calculation EMF-2002 "HNP Parameters Document"

6.3 Specifications

6.3.1 EBASCO Specifications

Specifications listed in this Section are the original submitted version listed without revision levels. For modifications or purchases, the latest revision of the specification should be used (See NRCS for latest Specification Revisions). For information on existing equipment, the revision of the Specification in effect at the time of purchase of the particular component of interest must be used.

6.3.1.1 Design Specifications

6.3.1.1.1 CAR-SH-A-02 Nuclear Steam Supply System

6.3.1.1.2 CAR-SH-M-69 SS Packless Globe Valves

6.3.1.1.3 CAR-SH-M-73 Solenoid Valves

6.3.1.1.4 CAR-SH-M-71 Design Specification for ANSI Nuclear Safety Classes 1,2 & 3 and

ANSI B31.1 Non-Nuclear Safety/Seismic Category I and Seismically Designed Piping and Supports

6.3.1.1.5 CAR-SH-E-09B Metal-Enclosed Switchgear (Class 1E) 600-Volt Class Drawout Type

6.3.1.1.6 CAR-SH-E-10B Motor Control Centers for Use in Central Power Station (Class 1E)

6.3.1.1.7 CAR-SH-E-14C 300-V Class 1E Instrumentation, Communication, Computer Input Cable and Non-Class 1E Telephone Cable

6.3.1.1.8 CAR-SH-E-14D Electric Cables - Class 1E Thermocouple and Special Cables

6.3.1.1.9 CAR-SH-E-15A Electric Cables - Class 1E Special Cables

6.3.1.1.10 CAR-SH-E-17B 125-V DC Distribution Panels (Class 1E)

6.3.1.1.11 CAR-SH-E-22A Lighting and Miscellaneous Panel Specification (Nonsafety-Related)

6.3.1.1.12 CAR-SH-IN-33 Level Transmitters

6.3.1.1.13 CAR-SH-IN-43 Thermocouples, RTDs and Test Wells

6.3.1.1.14 CAR-SH-A-002, Specification for RHR PUMPS

6.3.1.2 Installation Specifications

6.3.1.2.1 EDC-3 "Electrical Design Criteria No. 3 Cable Tray System - Design and Installation"

6.3.1.2.2 EDC-4 "Electrical Design Criteria No. 4 Conduit System Design and Installations"

6.3.1.2.3 EDC-8 "Electrical Design Criteria No. 8 Power Cable Ampacities"

6.3.1.2.4 EDC-9 "Electrical Design Criteria No. 9 Tabulation of 480-V ACB/Starter/ Cable Sizes for Major Loads"

6.3.1.2.5 EDC-17 "Electrical Design Criteria No. 17 480-V Auxiliary System"

6.3.1.2.6 EDC-18 "Electrical Design Criteria No. 18 Electric Cables Data - Permissible Control Circuit Loop Lengths"

6.3.1.2.7 EDC-21 "Electrical Design Criteria No. 21 208/120-Volt Class 1E Auxiliary System"

6.4 Calculations

6.4.1 Mechanical Calculations:

6.4.1.1 HNP-M/MECH-1012 RWST Gravity Drain

6.4.1.2 EQS-44 RHR Isolation Valve Closure Setpoint

6.4.1.3 SD-0018, Containment Sump Vortex Prevention Calculation.

6.4.1.4 NSSS-0038 RHR Heat Exchanger and Pump Cooler Cooling Water Outlet Temperatures

6.4.1.5 NSSS-0039 calc: To Size a Restriction Orifice in the RHR Pump Miniflow Lines

6.4.1.6 NSSS-0047 calc: RCS Midloop Level Gradients (Formerly HNP-M/MECH-1004)

6.4.1.7 NSSS-0048 calc: Gravity Drain During Midloop Operation (defines HNP reduced inventory compliance)

6.4.1.8 SI-0057 calc: RHR/SI Check Valves to Cold Legs and Hot Legs Testing

6.4.1.9 RH-0014 calc: RHR System Heatup Rates during Minimum Recirculation

6.4.1.10 SI-0043 calc: RHR Pump NPSH Evaluation (containment sump suction at max runout and max flow at reduced inventory)

6.4.1.11 SW-0083 calc: CCW and RHR Heat Exchanger Overall Heat Transfer Coefficients , evaluates overall heat transfer coefficients using 95 degree service water.

6.4.1.12 TANK-0016, Head Requirement To Prevent Vortex In RWST

6.4.1.13 NED-D/NFSA-0001, "PWR LOCA Analysis Update" (current HNP LBLOCA analysis, replaced EMF-93-193, R2 and EMF-97-0002) see ESR 9600093.

6.4.2 Stress Calculations

6.4.2.1 SA-152 1A-190-RH-1 Piping Isometric

6.4.2.2 SA-153 1A-190-RH-2 Piping Isometric

6.4.2.3 SA-166 1A-190-RH-3 Piping Isometric

6.4.2.4 SA-2650-1 1A-236-RH-4 Piping Isometric

6.4.2.5 SA-2650-2 1A-236-RH-5 Piping Isometric

6.4.2.6 SA-152 1A-190-RH-1 Piping Isometric

6.4.2.7 SA-152 1A-190-RH-1 Piping Isometric

6.4.2.8 SA-153 1A-190-RH-2 Piping Isometric

6.4.2.9 SA-166 1A-190-RH-3 Piping Isometric

6.4.2.10 SA-2650-1 1A-236-RH-4 Piping Isometric

6.4.2.11 SA-2650-2 1A-236-RH-5 Piping Isometric

6.4.2.12 SA-2650-3 1A-236-RH-1 and 2 Piping Isometric

6.4.2.13 SA-3001 1A-190-RH-2 Piping Isometric

6.4.2.14 SA-3065 1A-236-RH-2 Piping Isometric

6.4.2.15 SA-3066 1A-236-RH-3 Piping Isometric

6.4.2.16 SA-3067 1A-236-RH-3 Piping Isometric

6.4.2.11 HNP-C/STRS-1047 Lead Shielding of Line 2RH10-4SA-1

6.4.3 Electrical Calculations

6.4.3.1 E-5522.000, "Electrical Penetration Heat Losses"

6.4.3.2 0030-PKR Electrical Penetration Protection (Reg. Guide 1.63), Rev. 6

6.4.3.3 E1-0001.03 Overcurrent Relay Setting for 460-V Power Center Breaker

6.4.3.4 E1-0006, "480V Feeder Ground Overcurrent Alarm"

6.4.3.5 EQS-0002 "Refueling Water Storage Tank Level Setpoint"

6.4.3.6 HNP-C/EQ-1082, "Agastat 7012 Relay Add to Transfer Panels 1A-SA & 1B-SB"

6.4.3.8 HNP-I/INST-1018 RHR Header Flow Insrument Error Analysis

6.4.3.9 HNP-I/INST-1047 RHR HX Outlet Temperature Instrument Error Analysis

6.4.4 Westinghouse Calculations

6.4.4.1 WCAP-9990, "Structural Analysis of the Reactor Coolant Loop for the Shearon Harris Nuclear Power Plant 1, Volume 4, Analysis of Class 1 Auxiliary Piping", Rev. 0 November, 1984

6.4.4.2 WCAP-11736A, "Residual Heat Removal System Autoclosure Interlock Removal Report for the Westinghouse Owner's Group", rev. 0, October 1989.

6.4.4.3 WCAP 11916, "Loss of RHR While the RCS is Partially Filled", July, 1988

6.4.4.4 WCAP-12476, "Evolution of LOCA During Mode 3 and 4 Operation for

Westinghouse NSSS", 11/1/1991.

6.4.4.5 WCAP-14486, "ECCS Hot Leg Recirculation Elimination for Westinghouse 3 and 4 Loop design NSSS, 12/1/1995.

6.5 Modifications

6.5.1 PCR-02898 Suction Valve Auto Closure Deletion and Replacement With ALB Alarm,.

6.5.2 PCR-01296 Reactor Coolant Wide Range Pressure Interlock

6.5.3 PCR-04489 RHR Pump Performance during Mid-Loop (through Rev 7)

6.5.4 PCR-05347 RHR Pump Vibration Monitoring

6.5.5 PCR-05371 RWST Boron Concentration Increase

6.5.6 ESR 95-00170-002 Limit RHR upon Loss of Instrument Air (Replaced PCR 06181)

6.5.7 ESR 97-00338 Evaluation of Rated Running Motor Amps for the RHR Pumps

6.5.8 ESR 97-00378 Low Head RHR Low Flow through Branch Line to RCS

6.5.9 ESR 97-00383 1RH-121 Setpoint

6.5.10 FCR-P-03903-001 LHSI Orifice Sizing

6.6 Regulatory

6.6.1 Final Safety Analysis Report, Harris Nuclear Plant (time of Licensure)

6.6.1.1 Section 5.4.7 Residual Heat Removal System

6.6.1.2 Section 6.2.2 Containment Heat Removal

6.6.1.3 Section 6.3.1 Emergency Core Cooling System - Design Bases

6.6.1.4 Appendix A to License No.DPR-50-400.NPF-63, HNP Technical Specifications,

6.6.2 10 CFR

6.6.2.1 PART 20 , "Standard for Protection Against Radiation" current issuance

6.6.2.2 PART50.48. "Fire Protection", CURRENT ISSUANCE

6.6.2.3 PART 50.49, "Environmental Qualification of Electrical Equipment Important to Safety for Nuclear Power Plants", CURRENT ISSUANCE

6.6.2.4 PART 50.54, "Conditions of Licenses", CURRENT ISSUANCE

6.6.2.5 PART 20 , "Standard for Protection Against Radiation" current issuance

6.6.2.6 PART 20 , "Standard for Protection Against Radiation" current issuance

6.6.2.7 PART50.48, "Fire Protection", CURRENT ISSUANCE

6.6.2.8 PART 50.49, "Environmental Qualification of Electrical Equipment Important to Safety for Nuclear Power Plants", CURRENT ISSUANCE

6.6.2.9 PART 50.54, "Conditions of Licenses", CURRENT ISSUANCE

6.6.2.10 PART 50.55a, "Codes and Standards", CURRENT ISSUANCE

6.6.2.11 PART 50.63, "Loss of All Alternating Current Power", CURRENT ISSUANCE

6.6.2.12 PART 50, App. A, "General Design Criteria", 1986, CURRENT ISSUANCE

6.6.2.13 PART 50, App. B, "Quality Assurance Criteria for Nuclear Power Plants and Fuel Reprocessing Plants", CURRENT ISSUANCE

6.6.2.14 PART 50, App.J, "Primary Reactor Containment Leakage Testing for Water-Cooled Power Reactors", CURRENT ISSUANCE

6.6.2.15 PART 73, "Physical Protection of Plants and Materials", CURRENT ISSUANCE

6.6.2.16 PART 100, "Reactor Site Criteria"

6.6.3 29 CFR

6.6.3.1 PART 1910, "Occupational Safety and Health Act", CURRENT ISSUANCE

6.7 Correspondence

6.7.1 NRC Outgoing

6.7.1.1 NLU-79-299, "Request for Additional Information IEB 79-08" , 07/20/79.

6.7.1.2 NLU-80-549, "Orders for Modification of Licenses Concerning Environmental Qualification of Safety-related Electrical Equipment" , 10/24/80.

6.7.1.3 LAP-83-484, response to GL 82-33, 12/02/83

6.7.1.4 NLU-79-299, "Request for Additional Information IEB 79-08" , 07/20/79.

6.7.1.5 NLU-80-549, "Orders for Modification of Licenses Concerning Environmental Qualification of Safety-related Electrical Equipment" , 10/24/80.

6.7.1.6 NLU-79-299, "Request for Additional Information IEB 79-08" , 07/20/79.

6.7.1.7 NLU-80-549, "Orders for Modification of Licenses Concerning Environmental

Qualification of Safety-related Electrical Equipment" , 10/24/80.

6.7.1.8 LAP-83-484, response to GL 82-33, 12/02/83

6.7.1.9 NLU-84-137, "Confirming Order for Generic Letter 82-33" , 02/22/84

6.7.1.10 NLS-85-384, transmitted CP&L report "Reactor Containment Recirculation Sump Evaluation, Shearon Harris Nuclear Power Station Units 1 and 2 by Alden Research Laboratory, Worchester Polytechnical Institute, Holden, Mass., dated 09/84" to the NRC 10/25/85.

6.7.1.11 NLS-87-197, GL 87-12 response, 9/21/87

6.7.1.12 NLS 88-293, Response to GL 88-17, "Loss of Decay Heat", 1/3/89

6.7.1.13 NLS 89-028, Response to GL 88-17 programmatic actions requirement, 2/1/89

6.7.1.14 NLS 90-226, "Request for License Amendment- RHR Auto Closure Interlock Deletion", 11/16/1990

6.7.1.15 NLS-91-113, "RHR ACI Deletion" Commitment change request to SER in NRC-91-125 for LA-24 for Position #5, 4/23/91

6.7.1.16 NLS-93-835. "SHNPP Individual Plant Examination Submittal"(response to GL 88-20), 8/20/93

6.7.1.17 HNP-95-061, GL 88-20, Supp 4, "IPEEE Response and USI A-45 resolution", 6/30/1995

6.7.1.18 LER-87-060, Isolation of RHR during Testing of Valve Interlocks due to Test Equipment Failure, 11/16/87

6.7.1.19 LER-88-001, Emergency Operating Procedure Deficiency for Switchover to Recirculation after a Loss-of -Coolant Accident, 2/15/88

6.7.1.20 LER 89-022-00, Loss of RHR Train due to Spurious Closure of Suction Valve During Testing of Interlocks, 1/9/90

6.7.1.21 LER-92-003-00, Discrepancy in Required Hot Leg Switchover time created possible condition that could have prevented residual heat removal, 2/26/92

6.7.1.22 HNP-96-168 reply to NRC Integrated Inspection Report 96-06 Notice of Violation

6.7.1.23 HNP-97-199, initial response to GL 97-04, commits to providing response by 2/4/98, 11/05/97.

6.7.1.24 HNP-98-007, response to GL 97-04 for NPSH of ECCS and Containment Heat Removal Pumps, 2/2/98.

6.7.1.25 HNP-98-171, Response to GL 98-02, "Loss of Reactor Coolant Inventory and Associated Potential Loss of Emergency Mitigation Functions While in a Shutdown Condition", 11/23/98

6.7.1.26 HNP-IST-002, HNP IST Program Submittal- Second Interval

6.7.1.27 HNP, CP&L Letter regarding Safety Review Question Responses (440.19, 440.20), dated 8/31/82

6.7.2 NRC Incoming

6.7.2.1 NRC-88-717, Transmitted GL 88-17, 10/17/88

6.7.2.2 NRC-90-316., Programmed Enhancements for GL 88-17, "Loss of Decay Heat Removal", 05/23/90

6.7.2.3 NRC-91-125, "Issuance of Amendment 24 to Facility Operating License No. NPF-63 regarding Removal of Autoclosure Interlock for the Residual Heat Removal System Suction/Isolation Valves - SHNPP Unit 1", includes Safety Evaluation for WCAP-11736 specific to HNP, (see also later revision to this in NRC-91-228) 3/4/91

6.7.2.4 NRC- 91-228, ACI Deletion Commitment Revision for RHR System (allows deviation from plant improvement #5 requirement- resetting thrust values or downsizing motors) -SHNPP Unit 1, 5/2/1991 (re: letters of 4/23/91, 11/16/90 and 12/21/90)

6.7.2.5 NRC-91-351, Request for Additional Information Re: Generic Letter (GL) 89-10, Supplement 3, 6/25/1991.

6.7.2.6 NRC-96-356, NRC Integrated Inspection Report 96-06 Notice of Violation (see LER 96-014)

6.7.2.7 NRC-98-0204, GL 97-04 (LOCA NPSH concerns) closure letter., dated 06/19/98

6.8 Regulatory Guides

6.8.1 RG. 1.1, Rev. 0, 11/1970, Assumptions for Evaluating the Potential Radiological Consequences of a Loss of Coolant Accident for Pressurized Water Reactors

6.8.2 RG. 1.30, Rev. 0, 1972, Quality Assurance Requirements for the Installation, Inspections, and Testing of Instrumentation and Electrical Equipment

6.8.3 RG 1.32, Rev. 2, 2/1977, "Criteria for Safety-Related Electric Power Systems for Nuclear Power Plants", (Use of IEEE STD 308-1971, Criteria for Class 1E Electric Systems for Nuclear Power Generating Stations)

6.8.4 RG. 1.33, Rev. 2, 2/1978, Quality Assurance Program Requirements

6.8.5 RG 1.62, Rev.0, 10/1973, Manual Initiation of Protective Actions

6.8.6 RG 1.63, Rev . 2, 7/1978, Electric Penetration Assemblies in Containment Structures for Water-Cooled Nuclear Power Plants

6.8.7 R.G. 1.64, Rev. 2, Quality Assurance Requirements for the Design of Nuclear Power Plants. (Withdrawn per 56 FR 36715 on 7/31/91, but still applies to HNP)

6.8.8 RG. 1.74, Rev. 0, 1974, Quality Assurance Terms and Definitions (Withdrawn per 54 FR 38919 on 9/21/89, but still applies to HNP)

6.8.9 RG 1.75, Rev.1, 01/1975, Physical Independence of Electric Systems

6.8.10 RG 1.82, Rev. 0, 06/1974, "Water Sources for Long-term Recirculation Cooling Following a Loss-of-Coolant Accident," U.S. Nuclear Regulatory Commission. (later replaced NUREG 0869)

6.8.11 RG. 1.97, Rev. 3, 05/1983, "Instrumentation for Light-Water-Cooled Nuclear Power Plants to Assess Plant and Environs Conditions During and Following an Accident"

6.8.12 RG 1.139, Rev. "For Comment", 5/1978, "Guidance for Residual Heat Removal to Achieve and Maintain Cold Shutdown".

6.8.13 NUREG-0138, "Staff Discussion of Fifteen Technical Issues Listed in Attachment to 11/3/76 Memorandum from Director, NRR to NRR Staff", 11/1976

6.8.14 NUREG-0737, "Clarification of TMI Action Plan Requirements", November, 1980.

6.8.15 NUREG-0800, "Standard Review Plan for the Review of Safety Analysis Reports for Nuclear Power Plants," U.S. Nuclear Regulatory Commission, (3rd Edition) July 1981 (formerly NUREG-75/087)" (dated by section)

6.8.15.1 Section 3.6.1, Plant Design For Protection Against Postulated Piping Failures In Fluid Systems Outside Containment (NUREG-0800) Rev.1, July, 1981.

6.8.15.2 Section 5.4.7, Residual Heat Removal System (NUREG-0800), Rev. 2, July 1981,

6.8.15.3 Section 6.2.2, Containment Heat Removal Systems (NUREG-0800), Rev. 3, July 1981

6.8.15.4 Section 6.3, Emergency Core Cooling (NUREG-0800), Rev. 1, July 1981

6.8.16 NUREG-0801, "Evaluation Criteria for Detailed Control Room Design Reviews" , October 1981

6.8.17 NUREG-0869, "USI A-43 Regulatory Analysis," U.S. Nuclear Regulatory Commission, (Revision 0) May 30, 1984 (Replaced by RG 1.82)

6.8.18 NUREG/CR-1505, "Improved Reliability of Residual Heat Removal.Capability in

PWR's as Related to Resolution of Generic Issue 99", May 1988

6.9 Other NRC Documents

6.9.1 Branch Technical Positions

6.9.1.1 BTP-RSB-5-1, "Design Requirements of the Residual Heat Removal System", Rev. 2, July 1981 (Attached to Standard Review Plan NUREG 0800 Section 5.4.7)

6.9.1.2 BTP-EICSB-18, "Application of the Single Failure Criterion to Manually-Controlled Electrically-Operated Valves", Rev. 2, July 1981. (Attached to Standard Review Plan NUREG 0800, Section 8)

6.9.2 NRC Safety Evaluations and SERS

6.9.2.1 NUREG-1038, "Safety Evaluation Report related to the operation of Shearon Harris Nuclear Power Plant Units 1&2", November 1983

6.9.2.1.1 Section 5.4.7 "Residual Heat Removal System" (SER), 11/83

6.9.2.1.2 Section 6.2, "Containment Heat Removal Systems" (SER), 11/83

6.9.2.1.3 Section 6.3 "ECCS" (SER), 11/83

6.9.2.2 NUREG-1038, Sup. 4 "Safety Evaluation Report related to the operation of Shearon Harris Nuclear Power Plant Unit 1", October 1986

6.9.3 NRC Inspections

6.9.3.1 NRC-91-378 (EDSFI) "Electrical Distribution System Functional Inspection, HNP, Inspection Report 50-325/91-09 & 50-324/91-09." , 07/03/91

6.9.4 USNRC Generic Letters

6.9.4.1 GL-82-33, "Supplement 1 to NUREG 0737-Requirments for Emergency Response Capability", 12/17/82

6.9.4.2 GL-87-12 , "Loss of Decay Heat Removal While the RCS is Partially Filled:", 7/9/87

6.9.4.3 GL 88-17, "Loss of Decay Heat Removal", 10/17/88

6.9.4.4 GL 88-20, "Individual Plant Examination for Severe Accident Vulnerabilities-10CFR50.54(f).", 11/23/1988 (discusses outcome of USI A-45 decay heat removal) and its Supplements

6.9.4.5 GL 89-10, " Generic Letter "Safety Related Motor-Operated Valve Testing and

Surveillance" and its Supplements.

6.9.4.6 GL 95-07, "Generic Letter "Pressure Locking and Thermal Binding of Safety-Related Power-Operated Gate Valves", 8/17/95.

6.9.4.7 GL 97-04, "Assurance of Sufficient Net Positive Suction Head for Emergency Core Cooling and Containment Heat Removal Pumps", 10/07/1997.

6.9.4.8 GL 98-02 Generic Letter, "Loss of Reactor Coolant Inventory and Associated Potential Loss of Emergency Mitigation Functions While in a Shutdown Condition", 5/28/98

6.9.5 Conferences and Meeting Minutes

No specific Conferences an Meeting Minutes are addressed in this DBD; however, many of the technical issues related to these bulletins has been addressed in response to the above referenced Generic Letters.

6.9.6 USNRC Circulars

No specific Inspection and Enforcement Circulars are addressed in this DBD; however, many of the technical issues related to these bulletins has been addressed in response to the above referenced Generic Letters.

6.9.7 USNRC IE Bulletins

No specific Information Enforcement Bulletins are addressed in this DBD; however, many of the technical issues related to these bulletins has been addressed in response to the above referenced Generic Letters.

6.9.8 USNRC Information Notices

No specific Information Notices are addressed in this DBD; however, many of the technical issues related to these bulletins has been addressed in response to the above referenced Generic Letters.

6.10 EBASCO Correspondence

6.10.1 EB-C-05657, SHNPP Modification of RHR Isolation Valve Interlock. 12/9/77.

6.10.2 EB-C-16299, SHNPP Design Basis Program DBD-111 Residual Heat Removal System, 5/7/84

6.10.3 EB-W-2269, SHNPP RHR Suction Line Relief. 8/24/83.

6.10.4 EB-W-2657, SHNPP NPSH for RHR Pumps. 9/25/85.

6.11 WESTINGHOUSE Correspondence

6.11.1 FCQL-086, letter transmitting resolution of FSAR Question #440.51 providing Westinghouse analysis results for switchover value as 18 hours for HNP versus 24 hours for the generic plant, 7/14/82. (See LER-92-003)

6.11.2 CQL -2165, letter which provided the RHR System pump design code of record, 6/5/1974.

6.11.3 CQL-2356, letter which provided the RHR System heat exchanger tube side pressure drops and recirculation phase flow rate, 8/15/1974.

6.11.4 CQL-1454, letter which transmitted "Addendum to Equipment Specification G-679150- RHR Heat Exchangers".

6.11.5 CQL-4406, letter which provides code of record discrepancy resolution for the RHR System Heat Exchangers, 3/30/1977.

6.11.6 CQL-4663, Modification of RHR Isolation Valve Interlock, 10/7/77.

6.11.7 CQL-5850, RWST Sizing and Level Setpoints, 4/30/80

6.11.8 CQL-5880, letter that transmitted SD-CQL-283 Westinghouse RHR System Description for HNP, 05/05/80.

6.11.9 CQL-6075, letter which provides a list of Proof-of-Design calculations performed by Westinghouse, 11/19/1980.

6.11.10 CQL-8207, SHNPP RHR Pump Nozzle Load Analysis, 9/14/84.

6.11.11 CQL-9086, letter which provides Westinghouse Proprietary Class 1 As-Built Analysis- RH System. Transmitted Calculations 154W, Rev 2S0 and 155W, Rev. 3S0, 11/7/1985.

6.11.12 FCQL-395, SHNPP Residual Heat Removal System, 3/14/86

6.11.13 FCQL-437, SHNPP RHR Pump Technical Specification, 8/27/86 Westinghouse letter

6.11.14 FCQL-357, dated August 8, 1985 - FSAR Section 5.4 (RHR System).

6.11.15 CQL-89-510, "Westinghouse approval of CP&L Design for ACI Deletion", 2/10/1989.

6.11.16 FCQL-104, Westinghouse Response for Shearon Harris Safety Review Question 440.19, 8/24/82.

6.12 CP&L Internal Correspondence

6.12.1 SHNPPO-84-394, Residual Heat Removal (RHR) Containment Recirculation Sump Head Loss, 11/27/84.

6.12.2 NF-86-306, Inadvertent Boron Dilution at Cold Shutdown, 6/20/86.

6.13 Other Supporting Documentation

6.13.1 Design Basis Documents

6.13.1.1 DBD-002, "Piping Stress Analysis Assumptions"

6.13.1.2 DBD-100, "Reactor Coolant System"

6.13.1.3 DBD-103, "Chemical & Volume Control System Boron Thermal Regeneration System Boron Recycle System"

6.13.1.4 DBD-104, "Safety Injection"

6.13.1.5 DBD-106, "Containment Spray System"

6.13.1.6 DBD-108, " Containment Isolation System"

6.13.1.7 DBD-109, "Fuel Handling System"

6.13.1.8 DBD-131, "Component Cooling Water"

6.13.1.9 DBD-137, "RAB HVAC System"

6.13.1.10 DBD-202, "Plant Electrical Distribution System"

6.13.1.11 DBD-313, "Time Response" (ESFAS)

6.13.1.12 DBD-314, "HNP Parameters Document", Table 2.18 "ESF Low Head Safety Injection" Siemens Power Corporation calculation EMF-2002

6.13.2 Engineering Evaluations

6.13.2.1 ESR 96-00054 Valve Press Lock/Thermal Bind Evaluations Reqd by GL 95-07

6.13.2.2 ESR 96-00295 Perform Analysis on SI Check Valves using OST-1088 Data

6.13.2.3 ESR 97-00113 Derivation of OST-1088 Acceptance Criteria Justification

6.13.2.4 ESR 97-00564 Past Operability Assessment for 1RH-120 and 1RH-121

6.13.2.5 ESR 97-00769 Revise Description of CCW Use to RHR Pump Seal Cooler

6.13.2.6 ESR 98-00422 Evaluate OST-1088 Test Results of Check Valve Testing

6.13.2.7 ESR 99-00351 Upgrade of DBD-105 as part of CMIP Project

6.13.3 HNP Programs

6.13.3.1 PLP-112, "Motor Operated Valve Program"

6.13.3.2 PLP-605, "ASME Boiler and Pressure Vessel Code Section XI Repair and Replacement Program"

6.13.3.3 ISI-100, "Control of Inservice Inspection Activities"

6.13.3.4 EGR-NGGC-0156, "Environmental Qualification of Safety Related Electrical Equipment" Program

6.13.4 Analyses by Others

6.13.4.1 EMF-2002, Superceded by information in DBD-314, Siemens Power Corporation calculation.

6.14 Vendor Technical Manuals

6.14.1 Ingersoll Rand

6.14.1.1 VM-BJH-V04, Pumps, "Residual Heat Removal"

6.14.2 Westinghouse

6.14.2.1 VM-IJV, "Westinghouse Motors"

Summary of Revision

Revision 4 includes a complete rewrite of DBD-105 per ESR 99-00351 to include information on system boundaries and interfaces, regulatory criteria, and a more complete listing of references. Also added information to section 3.1 on the basis for the diversity of the RCS Wide range Pressure Instruments used for the RHR Inlet Isolation Valve Interlocks. Information on RHR pump performance monitoring to meet concerns outlined in GL 88-17 has also been included in this section. References to voided calculations were removed and additional applicable calculations added.

CAROLINA POWER & LIGHT COMPANY

SHEARON HARRIS NUCLEAR POWER PLANT

DESIGN BASIS DOCUMENT

FUEL HANDLING SYSTEM

DBD-109

RECEIVED
FEB 1 0 1999
HNP
DOCUMENT CONTROL

NOTE: Effective as of 01/15/87, full responsibility for the maintenance of this document and for subsequent modifications made or required to be made to this document is assumed by Carolina Power & Light Company ("CP&L"). Ebasco Services Incorporated has no responsibility for maintenance and modifications after said date.

REVISION	DATE	PREPARED BY	INDEPENDENT REVIEW BY	APPROVED BY
0	1/13/86	R.V. Chiavaro*	N/A	M.Gagliardi*
1	4/23/90	R.D. Harrington*	P.Chriscoe*	H.L. Williams*
2	5/27/94	A.R. Stalker*	Julie Turner*	W.A. Slover*
3	5/19/97	A.R. Stalker*	Dave Baksa*	J.H. Westmoreland*
4	12/03/97	F. Dean*	Dennis Price*	J.H. Westmoreland*
5	09/02/98	Fred M. Dean*	Charles J. Connors Jr.*	J.H. Westmoreland*
6	2/4/99	Andrew J. Howe	W C Pridgen	J.H. Westmoreland

*Signatures on Original

B/5

TABLE OF CONTENTS

Section		Page
1.0	FUNCTION	3
2.0	DESIGN BASES AND ASSUMPTIONS	3
2.1	General System Requirements	3
2.2	Instrumentation and Controls	9
2.3	Electrical Requirements	9
2.4	Structural	11
2.5	Materials and Chemistry	11
3.0	DESIGN MARGINS	11
3.1	Containment Circular Bridge Crane	11
3.2	Auxiliary Crane	11
3.3	Spent Fuel Cask Handling Crane	11
3.4	Spent Fuel Shielding	11
4.0	DOCUMENT REFERENCE LIST	12
4.1	Drawings	12
4.2	Specifications	12
4.3	Safety Analysis Report (FSAR)	12
4.4	Project Lists	13
4.5	Miscellaneous	13
5.0	APPENDIX	14
5.1	Design Input Documents	
	APPENDIX 1 - QA-M-CAR-47	15
	APPENDIX 2 - QA-M-CAR-84	16

1.0 FUNCTION

The Fuel Handling System (FHS) provides a safe and effective means of transporting, handling, inspecting, and storing nuclear fuel assemblies from the time they arrive at the plant until they leave the plant. The system is designed to minimize the possibility of mishandling fuel assemblies which might cause fuel damage and possible fission product release. The Fuel Handling Building's fuel pools and racks are designed to receive and store spent fuel from H. B. Robinson Unit 2 (PWR) and from the Brunswick Plant (BWR), in addition to storing SHNPP new and spent fuel (PWR).

The FHS consists of:

a) The RCB refueling cavity which is flooded during refueling shutdown.

b) The new and spent fuel pools and racks.

c) The fuel transfer system which transports fuel underwater to and from the pools and the reactor and includes various cranes, bridges, and tools used to transport the fuel.

d) Spent fuel cask decontamination system.

2.0 DESIGN BASES AND ASSUMPTIONS

2.1 General System Requirements

2.1.1 The FHS is designed to safely handle receipt, inspection, and storage of new and spent fuel and perform refueling operations.

2.1.2 The FHS provides the means for safely preparing the plant facilities for fuel movement, such as placement of fuel transfer canal gates in appropriate positions, dismantling and replacing reactor vessel components to allow for refueling and placement of portable barriers for safe fuel cask handling.

2.1.3 The FHS provides the means for safely transferring spent fuel among all fuel pools.

2.1.4 The FHS provides shielding for protection of personnel from excessive radiation exposure during refueling, fuel transfer, inspection, and fuel storage.

2.1.5 The FHS is designed such that either:

a) a load drop resulting from a single electrical or lifting device failure is precluded, or;

b) the consequences of a load drop can be accommodated without affecting the ability to bring the plant to a safe shutdown condition or to control the radioactive doses with 25 percent of the guidelines of 10CFR100.

2.1.6 The FHS is designed such that maximum design load on the wire rope hoisting cables shall not exceed 1/5 ultimate strength of the cables.

2.1 General System Requirements (continued)

2.1.7 The FHS provides appropriate containment isolation boundaries for containment penetrations.

2.1.8 The FHS is designed such that lifting devices have appropriate interlocks and stopping capability to preclude damage to the equipment such as the spent fuel racks, spent fuel, new fuel and control rod drives during transfer operations as well as during normal operations.

2.1.9 The FHS is designed such that fuel lifting and handling equipment and structures will not fail in such a manner as to damage safety-related and/or Seismic Category I equipment or structures in the event of an SSE.

2.1.10 Design Capacities

2.1.10.1 The new fuel storage pool has a storage capacity of more than 2 PWR cores. The fuel is stored in 6 x 10 PWR and 11 x 11 BWR rack modules. The maximum storage capacity of the new fuel pool is 360 PWR and 363 BWR fuel assemblies. The pool can store both new and spent PWR/BWR fuel.

2.1.10.2 The total design storage capacity of Spent Fuel Pool "B" is 768 PWR and 2057 BWR assemblies, as shown on drawing 2168-G-0116 S01. As the need arises, racks will be installed in Pools "C" and "D". New and spent PWR fuel is stored in a combination of 6 x 10, 6 x 8, 7 x 10 rack modules with BWR spent fuel stored in 11 x 11 rack modules. This arrangement permits the storage of spent fuel from other CP&L nuclear plants.

2.1.10.3 The spent fuel bridge crane electric monorail hoist has the load capacity of two tons. The spent fuel cask handling crane has a load capacity of 150 tons. The auxiliary crane has a design capacity of 12 tons. The overhead containment circular bridge crane has a design capacity of 250 tons and is and is capable of retaining a 175 ton lifted load during an OBE or SSE.

2.1.11 Loads

2.1.11.1 The racks are designed to withstand a combination of normal and postulated dead loads, live loads, loads due to thermal effects and loads caused by the operating basis earthquake and safe shutdown earthquake. The racks can withstand an uplift force equal to the maximum uplift capability of the spent fuel bridge crane. The racks are also designed with adequate energy absorption capabilities to withstand the impact of a dropped fuel assembly from the maximum lift height of the spent fuel bridge crane.

2.1.11.2 The Containment Circular Bridge Crane, the Spent Fuel Cask Handling Crane and Auxiliary Crane are designed to retain the maximum load and remain structurally intact during an SSE, although the crane may not be operable after the seismic event.

2.1 General System Requirements (continued)

2.1.12 Interface Requirements

2.1.12.1 The RHR pumps are used to transfer borated water between the refueling water storage tank and the reactor cavity. The RHR system provides an adequate cooling medium for spent fuel transfer (See Ref. 4.5.6).

2.1.12.2 Adequate shielding from radiation is provided during reactor refueling by transferring and storing spent fuel underwater and maintaining a safe shielding depth of 9.5 feet (minimum) of water above the fuel assemblies during handling. This permits visual control of the operation at all times while maintaining acceptable radiation levels (2.5 mR/hr) for periodic occupancy of the area by operating personnel.

2.1.12.3 Equipment inside the reactor containment is designed to handle Westinghouse (PWR) fuel assemblies. However, the equipment in the Fuel Handling Building is designed to handle Westinghouse design (PWR) and/or General Electric (BWR) fuel assemblies. Drawings and detailed information regarding the fuel itself are available from the Nuclear Fuel Section of CP&L.

2.1.12.4 The Spent Fuel Shipping Casks are CP&L owned and managed by the Emergency Preparedness and Spent Fuel Management Section of the Nuclear Services Department.

2.1.12.5 The Spent Fuel Pool gates receive compressed air from the Fuel Handling Building for inflation of the rubber seals.

2.1.12.6 The Manipulator Crane supplies compressed air for the operation of such accessories/tools as the control rod drive shaft unlatching tool.

2.1.12.7 Underwater lighting is necessary for spent fuel movements.

2.1.12.8 Direct gamma radiation heating in combination with pool water temperature shall not increase fuel storage pool wall temperature above the design value for the concrete.

2.1.12.9 Fuel handling shielding calculations are based on a 99-hour minimum decay time between reactor shutdown and initial fuel movement (see Reference 4.5.1).

2.1.12.10 The Fuel Handling System relies on the Spent Fuel Pool Area Ventilation System to:

a) monitor radiation levels,

b) reduce operator dose, and

c) isolate air flow in the event of an accident.

2.1 General System Requirements (continued)

2.1.12.11 In the event of a fuel handling accident, the Fuel Handling Area will be isolated and the building is maintained at subatmospheric pressure by operation of the Emergency Exhaust Air Cleanup Units which will filter the airborne fission particulates prior to releasing it to the atmosphere.

2.1.12.12 The Plant Communication System provides capability that refueling station personnel can be promptly informed of significant changes in the facility status or core reactivity conditions during core alterations. (See Reference 4.5.7).

2.1.12.13 The Fuel Handling System is designed with interlocks, setpoints, alarms, indicators, load paths and administrative controls as an integral part of providing a safe and reliable means for handling fuel (see Section 2.2.1).

2.1.13 Test Requirements

2.1.13.1 As part of normal plant operations, the fuel-handling equipment is inspected prior to the refueling operations. During the operational testing, procedures are followed to affirm the correct performance of the fuel handling system interlocks (such as refueling machine load test to demonstrate automatic load cutoff).

2.1.13.2 The equipment required to be load tested at 125 percent of the rated load are as follows:

Manipulator Crane, Spent Fuel Bridge Crane, Spent Fuel Cask Handling Crane, Auxiliary Crane, Containment Circular Bridge Crane, Rod Cluster Control Changing Fixture, New Fuel Elevator, Reactor Vessel Head Lifting Device and Reactor Internals Lifting Device, New Fuel Assembly Handling Tool and Spent Fuel Assembly Handling Tool.

2.1.13.3 Visual inspection and functional operation check are required for all the fuel handling equipment and tools.

2.1.14 Regulatory Requirements

2.1.14.1 The Fuel Handling Building is designed in accordance with Regulatory Guide 1.13, Rev. 1, "Spent Fuel Storage Facility Design Basis," and provides protection to the fuel racks and other pieces of equipment against natural phenomena such as tornadoes, hurricanes, and floods.

2.1.14.2 The design and safety evaluation of the fuel racks is in accordance with the NRC position paper, "Review and Acceptance of Spent Fuel Storage and Handling Applications," April 14, 1978, Revised January 18, 1979.

The racks are Seismic Category I structures designed to withstand normal and postulated dead loads, live loads, loads due to thermal effects, and loads caused by the operating bases earthquakes and safe shutdown earthquake events in accordance with Regulatory Guide 1.29, with stress allowables defined by ASME Code, Section III.

2.1 General System Requirements (continued)

2.1.14.3 The applicable standards are as follows:

a) Cranes - Crane Manufacturers Association of America (CMAA) Specification No. 70 and/or AISC Specification for the Design, Fabrication, and Erection of Structural Steel for Buildings.

b) Electrical - Applicable standards and requirements of the National Electric Code, NFPA 70, and NEMA standards MAI and ICS for design installation and manufacturing.

c) Materials - Main load-bearing materials are to conform to the specifications of the ASTM, ASME, or AISC Standards.

d) Safety - i - OSHA Standards, 29CFR1910 and 10CFR1926, including load testing requirements.

- ii - ANSI N18.2 "Nuclear Safety Criteria for the Design of Stationary PWR Plants."

- iii - Regulatory Guide 1.29 and GDC 2, 4, 61, and 62.

- iv - ANSI B30.2, "Safety Standards for Overhead and Gantry Cranes."

- v - NUREG-0554, "Single - Failure Proof Cranes."

- vi - ANS 57.1/ANSI N208, "Design Requirements for LWR Fuel Handling Systems."

e) Fuel Transfer Tube: ASME Section III, Code Class 2.

2.1.14.4 The Fuel Handling System has been designed and analyzed in accordance with NUREG-0612, "Control of Heavy Loads at Nuclear Power Plants" to assure the safe handling of heavy loads and preclude the potential release of radioactive material that would result in offsite doses that exceed 10CFR Part 100 limits.

2.1.15 Failure Effects

2.1.15.1 The racks are designed with adequate energy absorption capabilities to withstand the impact of a dropped fuel assembly from the maximum lift height of the spent fuel bridge crane. Handling equipment capable of carrying loads heavier than a fuel assembly is prevented by interlocks or administrative controls, or both, from traveling over the fuel storage area.

2.1 General System Requirements (continued)

2.1.15.2 Tool drop accidents involving the RCCA change tool, BPRA tool, thimble plug tool, PWR spent fuel handling tools, the BWR spent fuel handling tool, refueling trash baskets and items carried by the spent fuel handling tools (vendor supplied refueling trash basket, failed fuel rod storage basket and dummy spent fuel assembly) have been evaluated. Lift limits have been established for the RCCA change tool, BPRA tool, PWR spent fuel handling tools and the BWR spent fuel handling tool. If the thimble plug tool, a refueling trash basket (including the specimen basket) with its handling tool or the failed fuel rod storage basket with its handling tool is dropped from the full height that can be achieved by the spent fuel bridge crane; or the other tools are dropped from their lift limits, the consequences will be less severe than for a dropped spent fuel assembly and its handling tool. PWR spent fuel racks have been evaluated for a tool drop which develops 6677 ft-lbs of kinetic energy. BWR spent fuel racks have been evaluated for tool drop which develops 3800 ft-lbs of kinetic energy.

2.1.15.3 The Spent Fuel Bridge Crane Hoist height and tool length limit the maximum lift of a fuel assembly to a safe shielding depth. The Spent Fuel Bridge Crane will not drop its load nor leave the rails as a consequence of an SSE.

2.1.15.4 Design of the Fuel Handling Building and the spent fuel cask handling crane prevents the possibility of the cask passing over or falling into either the spent fuel or the new fuel pools. The floors of the cask decontamination area, cask head storage area, cask loading pool, railroad car unloading bay, and the operating deck south of column line 73Z within the administratively controlled cask travel envelope can withstand a postulated drop of fuel cask from the maximum height to which it can be raised without damage to any safety-related components. A removable barrier, provided on top of the wall dividing the cask loading pool and the cask head storage area, prevents a dropped cask from falling into the spent fuel pool.

2.1.15.5 A redundant supporting system is provided on the auxiliary crane in regard to hook, reeving and braking mechanisms. Provisions are made to manually move the crane to a laydown area for emergency manual lowering of the load.

2.1.15.6 Fuel handling accidents will not alter the rack geometry to the extent that the criticality acceptance criteria is violated.

2.1.15.7 Draining the fuel storage pool(s) through the fuel transfer tube (e.g., cavity seal ring leakage) shall not uncover stored spend fuel.

2.1.16 Prevention of Undue Risk To The Public Health and Safety

The Fuel Handling Building has provisions for suitable control of release of radioactive materials in gaseous effluents and provide a suitable environment for personnel, equipment and controls.

2.1.17 Special Requirements

2.1.17.1 Changing of the setpoint for the Spent Fuel Bridge Crane Hoist to lift heavier loads is under administrative control.

2.1 General System Requirements (continued)

2.1.17.2 Two independent systems are provided to prevent the Auxiliary Crane and the Spent Fuel Cask Handling Crane coming in contact with each other.

2.1.17.3 The centerline of the Containment Circular Bridge crane is offset from the reactor vessel centerline to assure the alignment of lifting devices with all possible loads and to provide clearance for containment spray header piping risers which run vertically along the containment liner.

2.1.17.4 The Spent Fuel Cask Handling Crane design and building arrangement preclude travel of the crane hook over the fuel pools.

2.1.17.5 The New Fuel Pool has the design capability to store spent fuel.

2.1.18 An In-Mast Sipping System allows fuel assemblies to be tested for open defects in fuel rods with the subject fuel assembly in the fuel handling mast during the normal course of reactor core offload.

2.2 Instrumentation and Controls

The Fuel Handling System is a vendor package pre-engineered in accordance to manufacturer's recommendations. All controls and alarms are as described in vendor's instruction manual.

2.3 Electrical Requirements

Electrical sources of power for various fuel handling equipment are as follows:

2.3.1 Refueling System

Load	Power Supply
Fuel Transfer Control Console Reactor Side	480V MCC 1E11 Compt 1B
Heater Ckt No. 1 (Continuous)	120/208V PP-1E121
Fuel Transfer Control Console Pit Side	480V MCC 1E11 Compt 2BL
Heater Ckt No. 2 (Continuous)	120/208V PP-1E121
FHB Bridge Crane	480V MCC 1-4B1021 Compt 2 AR
Manipulator Crane	480V MCC 1E11 Compt 1A
RCCA Change Fixture	480V MCC 1E11 Compt 6F
New Fuel Elevator Winch	480V MCC 1-4A1021 Compt 4BL
Fuel Pool Filter Hoist	480V MCC 1-4B1021 Compt 4BL

2.3 Electrical Requirements (continued)

2.3.2 Cask Crane and Auxiliary Crane, Containment Circular Bridge Crane

Load	Power Supply
150 Ton Overhead Cask Crane	480V MCC 1-4B1022 Compt 1C
10 Ton Overhead Aux Crane North End	480V MCC 1-4B1021 Compt 3DL
10 Ton Overhead Aux Crane South End	480V MCC 1-4B1021 Compt 3ER
250 Ton Containment Circular Bridge Crane	480V MCC 1D11, Compt 6D

2.3.3 Cask Decontamination and Spray System

Load	Power Supply
Decontamination Chemical Addition Control Power	120/208V PP-4B10212, Ckt #4
Decontamination Wash Pump	480V MCC 1-4B11 Compt 3D
Decontamination Rinse Pump (Cont)	480V MCC 1-4B1021 Compt 2C
Decontamination Chemical Addition Tank Immersion Heater 1B	480V MCC 1-4B1022 Compt 4DL
Decontamination Chemical Addition Tank Immersion Heater 1A	480V MCC 1-4B1021 Compt 4AL

2.3.4 Operational Requirements

Electrical interlocks and limit switches on the bridge and trolley drives of the manipulator crane protect the equipment. In an emergency, the bridge, trolley, and winch can be operated manually using a hand-wheel on the motor shaft. All loads in this system are considered intermittent in calculation DAC-1, except where noted in Sections 2.3.1 thru 2.3.3 above.

The FHS is required during plant shutdown for refueling and maintenance operations.

2.3.5 Electrical cables supplying power to the Fuel Handling Systems were sized in accordance with SHNPP Unit 1 Electrical Design Criteria Numbers 8, 14, 17, 18 and 21 (see Ref. 4.5.5).

2.3.6 The cable and raceway systems for this system is designed in accordance with SHNPP Unit 1 Electrical Design Criteria Numbers 3 and 4 (see Ref. 4.5.5).

2.3.7 The Manipulator Crane and FHB Bridge Crane can supply electric power for accessories such as an underwater television camera.

2.3.8 This system contains circuits routed through containment penetrations. There are heat loss and short circuit restrictions associated with these circuits (see Refs 4.5.1 and 4.5.3).

2.4 Structural

2.4.1 The buildings housing the Fuel Handling System are seismic Category I. The structural design basis requirements are described in Design Specifications for Containment Building, Fuel Handling Building and Tank Building.

2.4.2 Equipment is mounted in accordance with the manufacturer's recommendations. The foundations are designed for loads furnished by the equipment manufacturer.

2.5 Materials and Chemistry

All materials used in construction are compatible with the storage pool environment, and all surfaces that come into contact with the fuel assemblies are made of annealed austenitic stainless steel. All the materials are corrosion resistant and will not contaminate the fuel assemblies or pool environment. A neutron-absorbing material (Boron) is encapsulated into the stainless steel walls of each storage cell in the fuel racks. The New and Spent Fuel Pools are concrete structures with a stainless steel liner for compatibility with the pool water.

3.0 DESIGN MARGINS

3.1 Containment Circular Bridge Crane

250 ton capacity Containment Circular Bridge Crane is designed for handling 175 ton load during refueling operations under OBE or SSE conditions.

3.2 Auxiliary Crane

12 ton design capacity Auxiliary Crane is permitted to handle 10 ton load. Loads greater than 10 tons but less than 12 tons require an engineering evaluation.

3.3 Spent Fuel Cask Handling Crane

150 ton design capacity Spent Fuel Cask Handling Crane is rated to handle its design load under the dynamic loading conditions of the SSE.

3.4 Spent Fuel Shielding

The dose rate at the top of the spent fuel pool is calculated to be 2.5 mr/hr with 9.5 feet of water, 99 hours after shutdown. There is no explicit design margin for shielding/exposure rate. Any deviations from the current design must be evaluated individually against the calculation for Spent Fuel Pool Shielding.

4.0 DOCUMENT REFERENCE LIST

4.1 Drawings

a) Flow Diagrams - CAR-2168-G-578 Fuel Handling Building Cask Decontamination and Spray System

b) General Arrangement Drawings - CAR-2165-G022 through G026 General Arrangement Fuel Handling Building Plans and Sections

c) Piping Drawings - CAR-2165-G252 through G266 Fuel Handling Building Piping

d) Power Distribution and Motor Data Sheets - CAR-2166-B-041, Sheets 187S02, 193S01, 193S02, 231S01, 254S01, 254S02, 255S01, 255S02, 606, and 633.

e) Control Wiring Diagrams - CAR-2166-B-401 Sheets 499, 898, 899, 900 901, 902, 903, 906, 907, 4434, 4440 and 4450.

4.2 Specifications

CPL-HNP1-M-018	Permanent Cavity Seal Ring
CAR-SH-AS-02	Circular Bridge Crane
CAR-SH-AS-04	Fuel Handling Building Cask Crane
CAR-SH-AS-10	Field Erected Storage Tanks
CAR-SH-BE-12	Decontamination Facility Equipment
CAR-SH-AS-17	Pool Liners
CAR-SH-AS-47	Auxiliary Crane
CAR-SH-E-14B	Power and Control Cables
CAR-SH-E-12	Motors for Station Auxiliary Equipment up to 480V and 250 HP
CAR-SH-E-1OA	480V MCC's (Non IE)
CAR-SH-E-22A	Lighting & Miscellaneous Panels
CAR-SH-E-28	Containment Penetrations
CAR-1364-481S02	Containment Building
CAR-1364-481S04	Fuel Handling Building and Unloading Areas
CAR-1364-481S06	Reactor Building Internal Structure
CAR-1364-481S21	Tank Building
CAR-6418-AS04	Containment Building Steel Structure
CAR-6418-AS05	Fuel Handling Building Steel Structures
CAR-6418-AS09	Stainless Steel Liners

4.3 Safety Analysis Report (FSAR)

Section	Title
9.1	Fuel Storage and Handling
9.4.2	Spent Fuel Pool Area Ventilation System
11.5.2.7.2.2	Fuel Handling Building Normal Exhaust Monitors
11.5.2.7.2.3	Fuel Handling Building Emergency Exhaust Monitors
12.3.2.13	Fuel Handling Building Shielding
12.3.4	Area Radiation and Airborne Radioactivity Monitoring Instrumentation
15.7.4	Design Basis Fuel Handling Accidents
15.7.5	Spent Fuel Cask Drop Accidents

4.4 Project Lists

CAR-1364-B-069	Valve and Specialty List
CAR-1364-B-070	Piping Line List
CAR-2166-B-432	Instrument List
CAR-2166-B-508	Set Point Document
CAR-2166-B-043S01	Cable and Conduit List

4.5 Miscellaneous

4.5.1 Calculation Index

3-C-3-019	Spent Fuel Pool Shielding
DAC-1	Auxiliary System Load Study
22-PKR	Penetration Heat Loss
30-PKR	Electrical Penetration Protection (Reg. Guide 1.63)
NSSS-0060	Permanent Cavity Seal Ring
HNP-C/FHB-1038	Evaluation of Fuel Handling Tool Drop Accidents in A and B Fuel Pools

4.5.2 Emdrac List

P.O. Number	Vendor	Equipment
S018500	Westinghouse	Fuel Transfer System & Handling Equipment
S022900	Westinghouse	Spent Fuel Racks
NY-435051	Harnischfeger Corp.	Circular Bridge Crane
NY-435148	Industrial Engineering Work	Pool Liners
NY-435202	Kranco Inc.	Fuel Handling Building Cask Crane and Auxiliary Crane
NY-435201	Branson Cleaning Equipment Co.	Decontamination Facility Equipment
NY-435198	R.V. Harty Co.	FHB Rail Road Door
NPCD 81-010	Richmond Engr.Co.	Field Erected Storage Tanks
WA #XSA-3030-018	Westinghouse	In-Mast Sipping System
WA #XSA-3030-043	Westinghouse	Permanent Cavity Seal Ring

4.5.3 Site Originated Documents

Rack Layout Drawing	CPL-2165-S-2295
Spent Fuel Pool Cooling Calcs	HPES - Systems - 9
	HPES - Systems - 10
Electrical Penetrations	CPL 2166 - S2045

4.5.4 Licensing Correspondence

LAP-83-483 dated 10-21-83	Information regarding criticality analyses for spent fuel racks
NLS-85-215 dated 7-1-85	I&E Bulletin 84-03 (cavity seal ring failure)
NLS-86-323 dated 9-23-86	I&E Bulletin 84-03 (Final Response)

4.5 Miscellaneous (continued)

4.5.5 DBD-200 - Electrical Cable, Cable Trays and Conduit, Cable Routing, Class I Underground Electrical, Conduit and Class I Electrical, Manholes

4.5.6 DBD-105 - Residual Heat Removal System

4.5.7 DBD-206 - Plant Communication System

4.5.8 Regulatory Requirements

a) RG 1.13 Rev. 1 - "Spent Fuel Storage Facility Design Basis"

b) RG 1.29 Rev. 3 - "Seismic Design Classification"

c) NUREG - 0554 - "Single-Failure Proof Cranes"

d) NUREG - 0612 - "Control of Heavy Loads at Nuclear Power Plants"

5.0 APPENDIX

5.1 Design Input Documents

APPENDIX 1 - QA-M-CAR-47
APPENDIX 2 - QA-M-CAR-84

APPENDIX 1

December 22, 1972
QA-M-CAR-47
Rev 1, March 26, 1973

To: M B Kutcher

From: A C Chen

Subject: Shearon Harris Nuclear Power Plant
Fuel Transfer Tube
Quality Assurance Record

In accordance with QC 4, kindly develop a fuel transfer tube drawing (CAR-2165-G-066) suitable for obtaining proposals for the bellows assemblies.

The design criteria are:

1. PSAR Chapter 5 paragraph 5.1.1.9.5 and figure 5.1-9.
2. Westinghouse drawing 1096E09
3. H B Robinson drawings as follows:

   a) B-190178 Sheet 8-RO
   b) G-190518 R4
   c) G-190563 R5
   d) 5379-3444 RO
   e) 5379-3445 RO

4. Westinghouse contract document appendis A Book 3 Figure 4-59, page 4-171.

Please sign and return the original of this memo to indicate your intention of compliance with these criteria.

Prepared by A C Chen, Job Engineer _____ * * _____

Acknowledged by MB Kutcher, Design Supvr _____ * * _____

Approved by S P Becker, Supervising Engr _____ * * _____

MFM:rg

* * Signatures on file in Revision 2

APPENDIX 2

QA-M-CAR-84
February, 5, 1975

5-S-SF-1

To: M B Kutcher

From: A Cesnavicius

Subject: CAROLINA POWER & LIGHT COMPANY
SHEARON HARRIS NUCLEAR POWER PLANT
QUALITY ASSURANCE RECORD
FUEL HANDLING BUILDING PIPING

Please prepare drawings CAR-2165-G-252 thru G-274 in accordance with the following criteria:

PSAR Section 9.9

General Arrangment Drawings, as applicable
Mechanical Design Guides, as applicable
Project Flow Diagram Legend Sheet, Drawing No. CAR-2165-G-041
Piping Line List
Valve & Specialties List
Manufacturer's equipment drawings
Westinghouse Fluid Systems Design Manual Section 3L2
Primary & Demin Water System - Flow Diagrams, G-049 & 299
Fire Protection System - Flow Diagram, G-055
Fuel Pool Cooling & Cleanup System - Flow Diagrams, G-061 & 062
Service Air System - Flow Diagram, G-300

Please sign and return the original copy of this memorandum to indicate your intention to comply with the above requirements.

Prepared by	A Cesnavicius	* *
Acknowledged by	M B Kutcher	* *
Approved by	A C Chen	* *

* * Signatures are on file in Revision 2

REVISION SUMMARY

DBD-109 Revision 3

Basis for revision is ESR-9400013.

The following changes were made in this revision:

Page 8	Section 2.1.15.7	Word change from "failure" to "leakage"
Page 12	Section 4.2	Added specification CPL-HNP1-M-018
Page 13	Section 4.5.1	Added Calc Index - NSSS-0060
	Section 4.5.2	Added WA #XSA-3030-043
	Section 4.5.3	Deleted "CAVITY Seal Ring, P.O. H 64673" reference and "Compression Gasket Dwgs. 1364-94437 & 1364-94438" reference
	Section 4.5.4	Added Licensing Correspondence reference - NLS-86-323, I&E Bulletin 84-03

DBD-109 Revision 4

Basis for revision is ESR-9500278 and PCR-4517.

The following changes were made in this revision:

Page 4	Section 2.1.10.2	Revised per ESR-9500278 and PCR-4517

DBD-109 Revision 5

Basis for revision is ESR-9800181.

The following changes were made in this revision:

Page 1		Added approval signatures for rev 5, and noted that signatures are on the original.
Page 2		Revised page number for section 2.4 due to the increased size of section 2.1.15.2
Page 8	Section 2.1.15.2	Revised per ESR-9800181
Page 13	Section 4.5.1	Added Calc HNP-C/FHB-1038 to references per ESR 98-00181

REVISION SUMMARY

DBD-109 Revision 6

Basis for revision is ESR-9700637.

The following changes were made in this revision:

Page 1		Added approval signatures for rev 6, and noted that signatures are on the original.
Page 11	Section 3.2	For auxiliary crane, added requirement for engineering evaluation for handling loads exceeding 10 tons up to 12 tons.

CAROLINA POWER & LIGHT COMPANY

SHEARON HARRIS NUCLEAR POWER PLANT

DESIGN BASIS DOCUMENT

FUEL POOL COOLING AND CLEANUP SYSTEM

DBD-110

RECEIVED
JUN 29 1999
HNP
DOCUMENT CONTROL

NOTE: Effective as of 2/27/87, full responsibility for the maintenance of this document and for subsequent modifications made or required to be made to this document is assumed by Carolina Power & Light Company ("CP&L"). Ebasco Services Incorporated has no responsibility for maintenance and modifications after said date.

REVISION	DATE	PREPARED BY	INDEPENDENT REVIEW BY	APPROVED BY
0	2/20/87	R. V. CHIAVARO/ E. RAINERO	D. SHAH	M. GAGLIARDI
1	11/20/90	E. W. O'NEIL, JR.	W. E. WHITE	R.A. STEWART
2	10/31/96	D. E. PRICE	D. BAKSA	J. WESTMORELAND
3	3/24/97	D. E. PRICE	D. BAKSA	J. WESTMORELAND
4	5/19/97	A. R. STALKER	D. E. PRICE	J. WESTMORELAND
5	10/15/98	E. W. O'NEIL, JR.	GEORGE O. WHITE	J. A. MANESS
6	10/26/98	D. P. BAKSA	F. M. DEAN	R. L. WILKS
7	6/28/99	Rand M. Dean	[illegible]	J.H. Westmoreland

SIGNATURES ON ORIGINAL

G/H

TABLE OF CONTENTS

Section		Page
1.0	FUNCTION	3
2.0	DESIGN BASES AND ASSUMPTIONS	3
2.1	General System Requirements	3
2.2	Instrumentation and Controls	9
2.3	Electrical	10
2.4	Materials and Chemistry	10
2.5	Failure Effects	11
3.0	DESIGN MARGINS	12
4.0	DOCUMENT REFERENCE LIST	12
5.0	APPENDIX	17

1.0 FUNCTION

The Fuel Pool Cooling and Cleanup System (FPCCS) is designed to provide adequate cooling to the new and spent fuel during all plant operating conditions and to maintain water quality by removing the particulate and dissolved fission and corrosion products resulting from spent fuel in the fuel storage pools, the transfer canals, and the reactor cavity.

2.0 DESIGN BASES AND ASSUMPTIONS

2.1 General System Requirements

2.1.1 The Fuel Pool Cooling and Cleanup System (FPCCS) is designed to cool and clean the new fuel and spent fuel pools and is comprised of three subsystems: two redundant cooling loops, two cleanup loops, and a skimmer loop. Together the three subsystems remove residual heat from the spent fuel, maintain water quality, and remove debris from the surface of the pools, respectively.

2.1.2 The Fuel Handling Building (FHB) has two storage facilities with a common cask unloading pool. Each facility consists of a new fuel pool, a spent fuel pool, interconnecting transfer canals, and a FPCCS. The south end pools contain new and spent fuel and have a functional cooling and cleanup system. The north end pools contain water, but the cooling and cleanup system is not functional, as the piping is not complete and blanked off. The north end systems will be made functional when extra spent fuel storage is necessary. The north end new fuel pool will be used as a spent fuel pool. This arrangement is based on servicing spent fuel from Shearon Harris-1, plus additional fuel from Brunswick Units 1 and 2 and H.B. Robinson Unit 2.

2.1.3 To accommodate a single active component failure without loss of function, the Fuel Pool Cooling loop is designed with adequate redundancy:

a. The installation of two 100 percent capacity heat exchangers assures meeting the design heat removal capability of the cooling system if one heat exchanger is unavailable.

b. Two 100 percent capacity fuel pool cooling pumps installed in separate cooling loops assures the system pumping capacity should one pump become inoperable.

2.1.4 The demineralizer provides adequate purification of the fuel pool water and maintains optical clarity in the pool.

2.1.5 The FPCCS has one fuel pool demineralizer filter and one fuel pool and refueling water purification filter which removes particulate matter from the new fuel pool water.

2.1 General System Requirements (continued)

2.1.6 The skimmer system for the new and spent fuel pools consists of surface skimmers, a skimmer pump, and a filter. The surface skimmers float on the water surface and are connected via a 5-foot (approximate) flexible hose to the pump suction piping at various locations on the perimeter of the pools. Flow from the pump is routed through the skimmer filter and returned to the fuel pools below the water level. (See Section 2.5.4)

2.1.7 The fuel pool cooling piping is seismic Category 1 and designed to ASME B&PV Code, Section III, Class 3 requirements, 1971 Edition through Summer 1973 addenda.

The Fuel Pool Cleanup Skimmer System piping in nonseismic Category 1 and designed to ANSI B31.1, Power Piping Code (1973 Edition through Summer 1973 Addenda).

The Fuel Pool Cleanup System piping (with the exception of those portions penetrating containment is (nonseismic Category 1 and designed to ANSI B31.1, Power Piping Code) (1973 Edition through Summer 1973 Addenda). The piping including the isolation valves which penetrate containment is seismic Category I and designed to ASME Section III, Class 2 requirements (1971 Edition through Summer 1973 Addenda).

The fuel pool and refueling water purification system piping is nonseismic Category 1 and designed to ANSI B31.1, Power Piping Code (1973 Edition through Summer 1973 Addenda).

2.1.8 The fuel pool liners are classified as non-nuclear safety; however, they are designed and constructed to ASME Code, Section III, Division 1, Subsection ND, and are subject to the Quality Assurance criteria of 10CFR50, Appendix B.

The Permanent Cavity Seal Ring is designed and constructed to ASME Code Section III, Subsection ND, except that code stamping by ANI is not required. The PCSR is classified as nuclear safety related, Safety Class 3.

2.1.9 The Fuel Pool Cooling and Cleanup System is located in the Fuel Handling Building which is designed in accordance with Regulatory Guide 1.13, Revision 1, "Spent Fuel Storage Facility Design Basis," and provides protection against natural phenomena such as tornadoes, hurricanes, and floods.

2.1.10 The maximum heat loads for the FPCCS can be found in ESR 96-00126 (Reference 4.5.3). It includes the Incore Shuffle, Full Core Offload Shuffle, and Post Outage Full Core Offload for pools A & B (south pools). Note that the north pools cannot be loaded until they are functional. Additional fuel pool heatload applicability documentation can be found in ESR 97-00636 (Reference 4.5.18).

2.1.11 The fuel pool water clarity and purity is maintained by passing approximately 6 percent of the cooling system flow through a cleanup loop consisting of two filters and a demineralizer.

2.1 General System Requirements (continued)

2.1.12 The suction line to the fuel pool cooling pump penetrates the fuel pool wall approximately 18 feet above the fuel assemblies which precludes uncovering the fuel assemblies as a result of a postulated suction line rupture. Syphoning of the pool is precluded by the location of the penetration and by terminating the piping penetration flush with the liner.

2.1.13 The design temperature of the concrete surrounding the pools is 150°F; therefore, the system is designed to limit the maximum temperature of the pools to 150°F. During Modes 1-4, the normal operating spent fuel pool temperature is limited to a maximum of 112°F. This value, in combination with the ability of plant operators to realign CCW to the SFP heat exchangers in less than 2.97 hours, ensures that the 150°F design temperature will not be exceeded when SFP cooling is terminated during the recirculation phase of a LOCA.

2.1.14 Butterfly valves are used throughout the system both to isolate components and as throttle valves providing flow control.

2.1.15 To maintain the Fuel Pool Cooling System requirements during a single train cooldown (that is, one train of the RHR/CCW is available to bring the reactor coolant temperature from a hot shutdown condition to 200°F or less within 36 hours of reactor shutdown), component cooling water can be diverted from all nonessential cooling loads.

2.1.16 The FPCCS is designed with flushable filters: fuel pool demineralizer filter, fuel pool and refueling water purification filter, and fuel pool skimmer filter.

The differential pressure across the flushable filters is measured with on-line instrumentation. When the filter differential pressure reaches a preset value, an alarm will alert the operator to initiate back-flushing.

2.1.16.1 The FPCCS filter's back-washing piping and connections are designed to 200°F and 400 psig. They are subjected to 350 psig during N_2 back-washing operation.

2.1.16.2 The FPCCS filters are provided with vent and drain connections.

2.1.17 The fuel pool cooling piping and associated supports are analyzed for sustained loads (pressure, deadweight); thermal expansion; occasional loads (OBE, SSE); and jet impingement. In addition, the fuel pool cooling piping is analyzed to ensure that the external forces transmitted by the piping at the interface of pipe to equipment nozzles does not exceed the allowable limits set by the equipment vendor.

2.1.18 The cleanup loop may be operated on an intermittent basis as required by fuel pool water chemistry analyses.

2.1.19 The FPCCS is manually controlled and may be shut down safely for reasonable time periods (at least one hour, with actual time periods determined by the pool heat-up rate to the 150°F limit) for maintenance or replacement of malfunctioning components.

2.1 General System Requirements (continued)

2.1.20 Prior to placing spent fuel in the pool, component cooling water to the spent fuel heat exchangers is required to be operational.

2.1.21 Test requirements

2.1.21.1 The safety-related piping and components of the FPCCS will be in-service tested in accordance with ASME Boiler and Pressure Vessel Code, Section XI.

2.1.21.2 The pumps are tested in the field to demonstrate performance as governed by provisions of ASME Power Test Code for Centrifugal Pumps, PTC 8.2.

2.1.21.3 Testing of the fuel pool cooling heat exchangers to demonstrate performance is governed by provisions of ASME Power Test Code for Closed Feedwater Heaters, PTC 12.1.

2.1.22 Regulatory Requirements

2.1.22.1 Appendix A of 10CFR50, General Design Criteria for Nuclear Power Plants, establishes minimum requirements for the principal design criteria for water-cooled nuclear power plants as follows:

2.1.22.1.1 General Design Criterion 2, which relates to the system being capable of withstanding the effects of earthquakes.

2.1.22.1.2 General Design Criterion 4, which relates to structures housing the system and the system being capable of withstanding the effects of external missiles.

2.1.22.1.3 General Design Criterion 5, which relates to shared systems and components important to safety being capable of performing required safety functions.

2.1.22.1.4 General Design Criterion 44, which relates to:

a) The capability to transfer heat loads from the reactor system to a heat sink under both normal operating and accident conditions.

b) Redundancy of components so that under accident conditions, the safety function can be performed assuming a single active component failure.

c) The capability to isolate components, subsystems, or piping if required so that the system safety function will be maintained.

2.1.22.1.5 General Design Criterion 45, which relates to design provisions to permit periodic in-service inspection of system components and equipment.

2.1.22.1.6 General Design Criterion 46, which relates to design provisions to permit appropriate functional testing of the system and components to assure structural integrity and leak-tightness, operability, and performance of active components and capability of the system to function as intended during normal, shutdown, and accident conditions.

2.1.22.1.7 General Design Criterion 61, which relates to the system design for fuel storage and handling of radioactive materials, including the following:

a) The capability for periodic testing of components important to safety.

b) Provisions for containment

c) Provisions or decay heat removal

d) The capability to prevent reduction in fuel storage coolant inventory under accident conditions

e) The capability and capacity to remove corrosion products, radioactive materials, and impurities from the pool water and reducing occupational exposures to radiation.

2.1.22.1.8 General Design Criterion 63, which relates to monitoring systems provided to detect conditions that could result in the loss of decay heat removal, to detect excessive radiation levels and to initiate appropriate safety actions.

2.1.23 NRC Regulatory Guide applicable to the design of the Fuel Pool Cooling and Cleanup System include 1.13 Rev. 1 for spent fuel storage facility design, 1,26 for quality classification, 1,29 for seismic design, and the NRC Standard Review Plan including Sections 9.1.3 and 9.2.5 (Branch Technical Position ASB 9-2). (See Reference 4.5.4.)

Conformance to applicable Regulatory Guides is discussed in FSAR Section 1.8 and is detailed in the design documents referenced in Section 4.2 and interfacing design basis documents.

2.1.24 The Component Cooling Water System supplies cooling water through the shell side of the fuel pool cooling heat exchangers while fuel pool water circulates through the tubes.

2.1.25 Demineralized water is provided to the suction of the fuel pool and refueling water purification pumps for flushing of the system piping.

2.1.26 The spent resin from the fuel pool demineralizer is sluiced to the Spent Resin Storage Tank via the Waste Processing System spent resin sluice header.

2.1 General System Requirements (continued)

2.1.27 The FPCCS purification loop has the capability of transferring borated water from the fuel pools, transfers canals, refueling cavity or reactor coolant drain tank to the Boron Recycle System recycle holdup tank.

2.1.28 The fuel pool and refueling water purification pumps have the capacity to provide makeup water at a rate greater than the loss of water due to normal leakage and evaporation.

2.1.29 The location of the inlet and outlet connections to the fuel pool precludes the possibility of coolant flow "short circuiting" the pool.

2.1.30 Provisions are incorporated in the layout of the system to allow for periodic inspection using visual and monitoring instrumentation. Equipment is arranged and shielded to permit inspection with limited personnel exposure.

2.1.31 Adequate provisions for the accessibility pull space and lay down area for the fuel pool heat exchangers, fuel pool cooling pumps, fuel pool and refueling water purification pumps, fuel pool skimmer pump, fuel pool demineralizer, associated equipment, and valves is incorporated in the plant designs.

2.1.32 All piping joints and connections are welded, except where flanged connections are required to facilitate equipment removal for maintenance and hydrostatic testing.

2.1.33 Design change ESR 96-00584 provides a flow path from the Primary Makeup Water System to the Spent Fuel Pool Cooling and Cleanup System. The interconnection is line 7PM1-233-1 between lines 7PM2-115-142 and 7SF2-193-1. Locked closed manual valve 7PM-V238-1 provides the isolation between the two systems. The purpose of the design change is to allow mildly tritiated water from the RMWST to be used to fill the Spent Fuel Pools. The tritiated water is used in the fuel pools instead of being released to the Harris Lake. The transfer rate from the PM system to the SF system is a few gallons per minute utilizing the available line pressure in the PM system. The PM water is clean, except for the tritium, and is less hazardous than the water from the RWST. The static head pressure of the water in the RMWST is sufficient to prevent backflow into the PM system from the SF system, even if the RMW pumps are not running. *(NOTE: It is possible to connect the systems in such a way as to get backflow; however, the consequences would not be severe. No system of interlocks or other design means of preventing inadvertent system interactions are included in the design. The plant procedures provide the backflow protection.)*

The amount of tritium released through the FHB exhaust will be limited to the amount evaporated from the pools. The analysis in the FSAR assumes a high release rate of tritium from the fuel. The total released to the environment is about 2,000 Curies/cycle(Table 11.1.6-1). This is split approximately equal between liquid and gas as the liquid released is about 1000 Curies (Table 11.2.3-1). While this system interconnection allows tritium to be evaporated, rather than discharged to the lake, there is no reduction in design margin. Increase in tritium levels in the SF system may use some of the current operating margin.

2.2 Instrumentation and Controls

2.2.1 The Fuel Pool Cooling and Cleanup System is manually operated from the Control Room. The operator has various local and control room alarms, indicators, inputs to computer, and lights to monitor system operating conditions and to take proper action to correct any failures or nonconformances.

2.2.2 The low water level in the spent fuel pool is 23 feet above the top of fuel rods within irradiated fuel assemblies seated in storage racks. The minimum required water level value is established so that 23' of water will be maintained above BWR and PWR spent fuel assemblies that are properly seated in their storage racks; and for BWR assemblies that are located in a storage cell, but are supported by their channel fasteners. The set points on the water level instrumentation will assure that a low water level alarm occurs before the minimum water level value is reached. This assures sufficient radiation shielding and submergence of cooling connections which are at the top of the pools. Also, the pools have to be prevented from overfilling so the level has to be maintained below a high limit. Therefore, safety-related instrumentation in both new and spent fuel pools is provided to give a high, low, and low-low level alarms in the Control Room and on local panel, along with digital inputs to computer and lights on the Main Control Board. Those alarms will alert the operator who can manually operate the system to maintain the proper level in these pools. A low flow alarm is provided to warn of interrupted cooling flow to the fuel pools.

2.2.3 The cooling system is designed to remove heat loads generated by the quantities of fuel stored in the pools. It is started manually by the operator from the Control Room. As a warning for the initiation of the second fuel pool cooling pump, high pool temperature alarms are provided in the Control Room along with analog inputs to computer and status lights on the Main Control Board. The temperature measurements are done by safety-related temperature instrumentation in both new and spent fuel pools.

2.2.4 Filters are back washed, strainers cleaned, and the fuel pool demineralizer resin sluiced when the operator receives an alarm for high differential pressure across this equipment.

2.2.4.1 Alarm is given on a local panel for the strainers on the inlet lines for both the cooling pumps and skimmer pumps and the fuel pool demineralizer.

2.2.4.2 Alarm is given on the Waste Processing Control Board along with analog inputs to the computer for the fuel pools and refueling water purification filters, fuel pool demineralizer filter, and the skimmer filter.

2.2.5 Local discharge pressure indication is provided for the fuel pool cooling pumps, the purification pumps, and the skimmer to allow the operator to monitor the proper functioning of the equipment. The fuel pool cooling and purification pumps' low discharge pressure is alarmed on local panel to alert the operator of pump runout or loss of pump suction so he can manually shut it off.

2.2 Instrumentation and Controls (continued)

2.2.6 High temperature alarms are provided for the heat exchangers to inform the operator of a system malfunction. The temperature of the fuel pool water entering and leaving the heat exchangers is monitored and alarmed. This will help the operator to evaluate the performance of the heat exchangers.

2.2.7 For pump protection, vibration switches are installed on safety-related pumps (IWP-3000 requirement) and alarm on high vibration. This will alert the operator who can manually shut them off.

2.2.8 The outlet flow from the purification system is locally monitored and alarmed on the local panel to alert the operator of abnormalities (low or no-flow condition).

2.2.9 Local cooling flow indication to the spent fuel pool is available for ASME Section XI testing purposes.

2.3 Electrical

2.3.1 The electrical power supply for the subject equipment is from the 480-V and 120-V ESF System and the 480-V and 120-V non-ESF Systems and DC power from Panels DP-1A-SA and DP-1B-SB.

2.3.2 The system electrical power supply for the safety-related 150 HP fuel pool cooling pump Motors 1&4A-SA and 1&4B-SB are fed from 480-V ESF MCC 1&4A33-SA and 1&4B33-SB, respectively, located in FHB EL 261' powered from load centers 1A3SA and 1B3SB, respectively. These loads are continuous per DAC-1 (see Reference 4.5.1.4).

2.3.3 Non-ESF 480-V power is provided by MCC's 1-4A33 and 1-4B33 located in Waste Processing Building EL 291.0' (these are continuous loads per DAC-1), 1-4A1021 and 14B1021 located in Fuel Handling Building EL 261.0' (these are intermittent loads per DAC-1), fed from their respective load centers 14A3, 14B3, 14A1, 14B1. These MCCs can be aligned with "A" or "B" train power in the event of a failure of one train. 120-V power is provided by power panels fed from their respective MCCs.

2.3.4 Electrical cables supplying power and control to the Fuel Pool Cooling and Cleanup Systems were sized in accordance with SHNPP Unit 1 Electrical Criteria Nos. 8, 9, 17, 18, 19, and 20 (see DBD-202).

2.3.5 The cable and raceway system for this system is designed in accordance with SHNPP Unit 1 Electrical Design Criteria Nos. 3 and 4 (see DBD-200).

2.3.6 In the event of loss of normal power, the fuel pool cooling pumps will be powered from the Emergency Diesel Generators 1A-SA and 1B-SB.

2.4 Materials and Chemistry

2.4.1 Selection of materials for equipment, piping, and components is based on the compatibility with the design pressure and temperature considerations and chemistry of the system fluid.

2.4 Materials and Chemistry (continued)

2.4.2 All piping, equipment, and components in contact with the fuel pool water are of austenitic stainless steel.

2.4.3 The fuel pool cooling heat exchanger has a shell constructed of carbon steel with stainless steel tubes and channel and the tube sheet of carbon steel with a stainless steel overlay.

2.4.4 The major components of the fuel pool cooling pumps (upper and lower casing, impeller, impeller ring, shaft and shaft sleeves) are constructed of stainless steel.

2.4.5 The major components of the new fuel pool strainer and fuel pool skimmer pump strainer are constructed of stainless steel.

2.4.6 The major components of the fuel pool and refueling water purification pump (upper and lower casing, impeller, and shaft) are constructed of stainless steel.

2.4.7 The major components of the fuel pool demineralizer (shell, internals) are constructed of stainless steel.

2.4.8 The major components of the fuel pool skimmer pump (upper and lower casing, impeller, and shaft sleeves) are constructed of stainless steel having a shaft of carbon steel.

2.4.9 Local sample points are provided in the cleanup loop to permit analysis of ion exchanger and filter efficiencies.

2.4.10 Local sample point from the fuel pool demineralizer is taken for maintaining the correct water chemistry in the Fuel Pool Water System. Based on these samples and analysis, the ion-exchanger resin may be changed if decontamination factors across the demineralizer do not satisfy the DF factor requirements. When the DF across this equipment becomes significantly less than specified, it is an indication that the ion-exchanger resin needs replacement.

2.4.11 Normal makeup water to the fuel pool is supplied by the refueling water storage tank. A backup system for filling the fuel pool is available through flexible hoses from existing vent lines of the Emergency Service Water System

2.5 Failure Effects

2.5.1 The reliability of the Fuel Pool Cooling System is assured by powering the cooling pumps from two separate buses so that each pump receives power from a different source. If a total loss of off-site power should occur, the operator has the option of transferring the pumps to the emergency power service.

2.5.2 The FPCCS is protected against the effects of high energy and moderate energy fluid system piping failures and internally generated missiles.

2.5.3 The fuel pool cooling portion of the system is capable of performing its intended function (removal of decay heat) despite the single failure of any active component. See reference 4.5.17.

2.5 Failure Effects (continued)

2.5.4 Syphoning of the pools is prevented by limiting the skimmer hose length to approximately 5 feet. Syphoning due to any failure is prevented by the location of the penetrations and by terminating the piping penetrations flush with the liner (see Section 2.1.12).

2.5.5 Floor and equipment drain sumps and pumping systems are provided to collect and transfer any FPCCS leakage to the Waste Management System.

2.5.6 The Units 2&3 Spent Fuel Pools are designed to store water up to nominal pool levels, but are not designed to store fuel. The water chemistry shall satisfy Harris plant commitments regarding radioactivity and water quality.

3.0 Design Margins

The Fuel Pool Cooling and Cleanup System is designed with an additional 10 percent margin to accommodate the friction loss in the piping.

With the operation of only Unit 1, there is additional cooling and cleanup capacity since the Unit 2 pumps and pools will not be in service initially.

4.0 Document Reference List

4.1 Drawings

4.1.1 Flow Diagrams

CAR-2165-G-061 Fuel Pools Cleanup Systems, Sheet 1
CAR-2165-G-062 Fuel Pools Cleanup Systems, Sheet 2
CAR-2165-G-305 Fuel Pools Cleanup System, Unit 1
CAR-2165-G-811 Boron Recycle System, Sheet 1
CAR-2165-G-813 Containment Building, Waste Processing System
CAR-2165-G-815 Waste Processing System, Spent Resin Storage
CAR-2165-G-827 Waste Processing System Concentrates Storage and Spent Resin Transfer
CAR-2165-G-828 Waste Processing System, Spent Resin Transfer
CAR-2165-G-847 Fuel Handling Building, Filter Backwash System

4.1.2 General Arrangements

CAR-2165-G-023 Fuel Handling Building Plan EL. 236.00 ft.
CAR-2165-G-024 Fuel Handling Building Section A-A
CAR-2165-G-025 Fuel Handling Building Section A-A

4.1.3 Piping Drawings

CAR-2165-G-252 FHB Piping Plan - EL 216
CAR-2165-G-253 FHB Piping Plan - EL 216 and 261
CAR-2165-G-254 FHB Piping Plan - EL 236, Sheet 1
CAR-2165-G-255 FHB Piping Plan - EL 236, Sheet 1
CAR-2165-G-256 FHB Piping Plan - EL 286, Sheet 1
CAR-2165-G-257 FHB Piping Section, Sheet 1
CAR-2165-G-258 FHB Piping Section, Sheet 2
CAR-2165-G-259 FHB Piping Section, Sheet 3
CAR-2165-G-260 FHB Piping Section, Sheet 4
CAR-2165-G-261 FHB Piping Section, Sheet 5
CAR-2165-G-262 FHB Piping Section, Sheet 6

4.1 Drawings (continued)

CAR-2165-G-263 FHB Piping Section, Sheet 7
CAR-2165-G-266 FHB Piping Plan - EL 286, Sheet 2

4.1.4 Electrical Drawings

CAR-2166-G-030	480-V Auxiliary One-Line Wiring Diagram, Unit 1
CAR-2166-G-037S01	General Services Auxiliary One-Line Wiring Diagrams Bus 1-4A, Unit 1
CAR-2166-B-401	Power Distribution and Motor Data Sheets: 177 S01, 183 S01, 212, 227 S01, 227 S02, 238, 254 S01, 613, 615, 633, 650, 651, 674, and 678

4.1.5 Instrumentation and Control Drawings

CAR-2166-B-401	Control Wiring Diagrams Sheets: 881 thru 892, 895, 897, 904, 905, 906, 907
CAR-2166-B-430	Logic and Schematic Diagrams Sheets: 04.1 thru 04.8

4.1.6 EMDRAC Drawings

1364-048683	Spent Fuel Pool Water Purification Pumps Performance Curve
1364-001917	Spent Fuel Pool Demineralizer Nameplate Details
1364-005236	Spent Fuel Pool Cooling Pump FHB El. 236 Motor Data
1364-005238	Spent Fuel Pool Cooling Pump FHB El. 236 Motor Speed Torque
1364-016182	Spent Fuel Pool Cooling Pump Performance Curve
1364-044205	Spent Fuel Pool Cooling Pump Performance Curve

4.2 Specifications

4.2.1 Mechanical

CAR-SH-M24	Spent Fuel Pool Heat Exchanger
CAR-SH-M13	Class 3 Centrifugal Pumps
CAR-SH-M12	Centrifugal Pumps and Accessories
CAR-SH-M10	Centrifugal Pumps and Accessories
CAR-SH-M60	Self-Cleaning Strainer
CAR-SH-M49Z	Basket Strainers
CAR-SH-M44A	Stainless Steel Butterfly Valves
CAR-SH-M41	Diaphragm Valves
CAR-SH-M45	Plug Valves
CAR-SH-M47	Temporary Strainers
CAR-SH-M36R	2-Inch and Smaller Carbon and Stainless Steel Valves
CAR-SH-M70	Wafer Check Valves
CAR-SH-M32A	2 1/2-Inch and Larger Carbon and Stainless Steel Valves
CAR-SH-M66M	Miscellaneous Control Valves
CAR-SH-M34Y3/36Y	2-Inch and Smaller Carbon and Stainless Steel Valves
CAR-SH-M66V	Miscellaneous Control Valves
CAR-SH-M30	General Power Piping

4.2 Specifications (continued)

CAR-SH-M71	Design Specification for ASME Nuclear Safety Class 1, 2, & 3 and ANSI B31.1, Non-nuclear Safety/Seismic Category 1 and Seismically Designed Piping
CPL-HNP1-M-018	Permanent Cavity Seal Ring

4.2.2 Electrical

CAR-SH-E-10A	MCCs (non-1E)
CAR-SH-E-10B	MCCs (1E)
CAR-SH-E-12	Motors for Station Auxiliary Equipment up to 480-V and 250 HP

4.2.3 Instrumentation and Control

A-02	Nuclear Steam Supply System
IN-01	Electronic Instrumentation
IN-03	Orifice Plates
IN-04	Thermocouple and Test Thermowells
IN-06	Local Instrument Cabinets and Racks and Miscellaneous Instrumentation (Class 1E)
IN-07	Pressure Gages
IN-09	Temperature Switches (NNS)
IN-10	Pressure Switches (NNS)
IN-16	Waste Processing Control Board and HVAC Control Panel (NNS)
IN-32	Level Switches
IN-43	RTD's/Thermocouple Assemblies and est Thermowells
IN-46	Miscellaneous Instruments

4.2.4 Radwaste

CAR-SH-N-15	Spent Fuel Pool Demineralizer
CAR-SH-N-36	Backwash Flushable Filters

4.2.5 Civil

CAR-SH-AS-1	Containment Liner, Air Locks, and Hatch

4.3 Final Safety Analysis Report

Sections:	1.8	9.1.1
	3.1	9.1.2
	3.2	9.1.3
	3.5	9.1.4
	3.6	9.2.5
	3.8.3	11.1.7
	3.8.4	15.7.5

4.4 Project Lists

CAR-1364-B-069	Valve and Specialty List
CAR-1364-B-070	Piping Line List
CAR-1364-B-432	Instrument List
CAR-1364-B-508	Setpoint Document

4.5 Miscellaneous

4.5.1 Calculation Index

4.5.1.1 Mechanical Calculations

05 SF-1	Line Sizing for New Fuel Cooling Pump
05 SF-4	Spent Fuel Pool Cooling Pumps
05 SF-7	Check on Assumption of Conservatism for Spent Fuel Decay Heat
05 SF-8	Sizing of Spent Fuel Pool Heat Exchanger
05 SF-11	Calculations to Fill Out Spent Fuel Heat Exchanger Specification
05 SF-12	Spent Fuel Cooling Heat Loads & Component Cooling Water Required
05 SF-13	Sent Fuel Pool Heat Exchanger Operating Pressure
05 SF-14	Sent Fuel Pool Heat Exchanger Test Pressure Determination
05 SF-17	Fuel Pool Skimmer System Line and Pump Sizing
05 SF-19	Spent Fuel Purification Pump Update
05 SF-21	Spent Fuel Pools Cooling Pump TDH
05 SF-22	Spent Fuel Pool Makeup Requirements
05 SF-24	Fuel Transfer Tube Support Loads
05 SF-25	Fuel Pool Cooling System Heat Load
05 SF-26	Fuel Pool Heatup
05 SF-27	Fuel Pool Heatup (Supplement to 05 SF-26)
05 SF-30	Restriction Orifices—Fuel Pool Gate Seals
05 SF-31	Spent Fuel Pools Equilibrium Temperatures
05 SF-32	Rate of Spent Fuel Temperature Rise
05 SF-33	Spectacle Blind Plate Thickness
SF-0036	Maximum Heat Load to Maintain the Spent Fuel Pool ≤212°F, ≤150°F, ≤140°F, and ≤137°F Under Full and Reduced CCW Flow
SF-0037	Maximum Heat Load to Maintain the Spent Fuel Pool ≤137°F Using Various CCW Temperatures
SF-0038	Spent Fuel Pool Heat Up Rate/ Time To Boil Calculation
SF-0039	Post-LOCA SFP Heat Exchanger Performance with Reduced CCW Flow
CC-0038	CCW Heat Exchanger Performance During Post-Accident Recirc Alignment

4.5.1.2 Radwaste Calculations

03R-14.12.048-1	Flushable Filters, Flushing Frequency, Crud Volumes
03R-14.12.000-10	Filter Backwash System Setpoint Derivation

4.5.1.3 Nuclear Engineering Calculations

No. 001—Parts 1-2 Decay Heat Release SHNPP Units 1 & 2 (File No. CPL Decay Heat)

4.5.1.4 Electrical Calculations

DAC-1 Auxiliary System Load Study

4.5.2 Instruction Manuals

Vacco Industries—Installation and Maintenance Instruction Manual Etched Pick Back Flushable Filters, Volumes I and II.

EMDRAC List—P.O. NY-435106

Ingersoll-Rand Comp—Spent Fuel Pool Refueling Water

4.5 Miscellaneous (continued)

Purification Pump and Condensate Transfer Pumps Instruction Manual

EMDRAC List—P.O. NY-435009

Goulds Pumps, Inc.—Spent Fuel Pool Cooling Pumps, Manual G-7

EMDRAC List—P.O. NY-435042

Zurn Industries, Inc.—Series 514 Sinlex Strainer, Manual No. Z1

EMDRAC List—P.O. NY-435163

Yuba Heat Transfer Corp—Spent Fuel Pool Heat Exchangers, Manual No. Y1

EMDRAC List—P.O. NY-435029

Hungerford & Terry—Spent Fuel Pool Demineralizer, Manual No. H5

EMDRAC List—P.O. NY-435028

4.5.3 ESR 96-00126, Rev. 0, Spent Fuel Pool Heatload Analyses Revision

ESR 97-00272, Rev. 0, Realignment of CCW to the SFP Heat Exchangers

ESR 97-00447, Rev. 0, SFP Hi Temperature Alarm Setpoint Change

4.5.4 CP&L Letter—CE-863185(E) dated April 29, 1986 (2902 Review of FSAR Amendment 22)

4.5.5 10CFR20, 21, 50, and 100

4.5.6 10CFR50, Appendix A, including General Design Criteria:

2 - Design Bases for Protection Against Natural Phenomena
4 - Environmental and Missile Design Bases
5 - Sharing of Structures, Systems, and Components
44 - Cooling Water System
45 - Inspection of Cooling Water System
46 - Testing of Cooling Water System
61 - Fuel Storage and Handling and Radioactivity Control
63 - Monitoring Fuel and Waste Storage

4.5.7 NRC Regulatory Guides

1.13 - Spent Fuel Storage Facility Design Basis, Rev. 1

1.26 - Quality Group Classifications and Standards for Water, Steam, and Radioactive Waste Containing Components of Nuclear Power Plants, Rev. 3

1.29 - Seismic Design Classification, Rev. 3

4.5.8 NUREG-75/087, Standard Review Plan for the Review of Safety Analysis Reports for Nuclear Power Plants, applicable section including 9.1.3 and 9.2.5 (ASB 9-2)

4.5 Miscellaneous (continued)

4.5.9 NUREG-0800, Standard Review Plan, Section 9.1.3, Rev. 1, dated July 1981, original attachment for Appendix Item QA-M-CAR-16A, Rev. 0

4.5.10 ANS 57.2/ANSI N210-1976, "Design Objectives for Light Water Reactor Spent Fuel Storage Facilities at Nuclear Power Stations"

4.5.11 ANS N18.2-1973, "Nuclear Safety Criteria for the Design for Stationary Pressurized Water Reactor Plants" (including Revision and Addendum ANSI 18.2a, 1975)

4.5.12 Interfacing Design Basis Documents including:

DBD-104 Safety Injection System

DBD-109 Fuel Handling System

DBD-128 Normal and Emergency Service Water, Screen Wash and Traveling Screens, Waste Process Component Cooling Water Systems

DBD-131 Component Cooling Water System

DBD-135 FHB HVAC, WPB HVAC Systems

DBD-200 Electrical Cable, Cable Trays and Conduit, Cable Routing, Class I Underground Electrical, Conduit and Class I Electrical, Manholes

DBD-202 Plant Electrical System, Off-site Power System, Generator, Exciter, and Isophase Bus Duct., Generator and Exciter Mechanical Support Systems

DBD-304 Gross Failed Fuel Detection System, Radiation Monitoring System

4.5.13 ASME Boiler and Pressure Vessel Code, Sections II, III, V, IX, XI, 1971 Edition through Summer 1973 Addenda

4.5.14 ANSI B31.1, Power Piping Code, 1973 Edition through Summer 1973 Addenda

4.5.15 ASME Power Test Code for Closed Feedwater Heaters, PTC 12.1

4.5.16 ASME Power Test Code for Centrifugal Pumps, PTC 8.2

4.5.17 ESR 96-00217, Rev. 0, Single Failure Analysis of Spent Fuel Pool Cooling System

4.5.18 ESR 97-00636, Rev. 0, SFP Heatload Analysis for RF08 and Cycle 9

4.5.19 ESR 99-00208, Rev. 0, Revised Minimum Fuel Pool Water Level.

5.0 Appendix

5.1 Design Input Documents

QA-M-CAR-16
QA-M-CAR-16A

5-S-SF-1

February 10, 1972
QA-M-CAR 16

Attachment 1
Revision 0
Page 1 of 1

To: R. Mahoney

From: R. W. McCaffrey

Subject: Shearon Harris Nuclear Power Station Spent Fuel Pool Cooling and Cleanup Flow Diagram Quality Assurance Record

Please develop a Spent Fuel Pool Cooling and Cleanup System Flow Diagram illustrating the system which will be shared by two units.

The criteria to be followed in design of this system are stated in:

PSAR Section 9.6
PSAR Chapter 15
Safety Guide 13
Westinghouse Reactor Fluid Systems Standard Design Package
STD-DES-3L-RFS-3L16
Project Specification Section 6.3.10

The system will be shared by two units with separate cooling and makeup lines from each unit.

The primary cooling loops and essential makeup lines will be designed to Seismic Class I requirements.

Please sign and return the original copy of this letter to indicate your intention to comply with the above stated requirements.

Prepared by R. W. McCaffrey SE/EN Project _____ *
Acknowledged by R. Mahoney EN Project _____ *
Approved by S.P. Hecker SU/EN Project _____ *

*--Signatures/initials located in DBD-110, Rev. 0

PROJECT: Shearon Harris Nuclear Power Plant

DEPARTMENT: Mechanical Design Engineering

DESIGN OUTPUT DOCUMENT: Flow Diagrams, Piping Drawings

SUBJECT: Fuel Pool Cooling System (FPCS)

A. SCOPE:

The scope of this document is to provide the criteria to develop the design documents as necessary for the Fuel Pool Cooling System. The Spent Fuel Pool Cleanup System and various auxiliary systems are designated as non-safety-related systems and are not part of this document.

B. FUNCTIONAL REQUIREMENTS:

The function of the FPCS is to remove residual heat generated by fuel stored in the fuel storage pools and to keep spent fuel assemblies covered with water during all storage conditions.

C. PERFORMANCE REQUIREMENTS:

The performance requirements of the FPCS are listed in the following documents:

1. ASME Boiler & Pressure Vessel Code, Section III
2. US NRC Standard Review Plan, Section 9.1.3
3. US NRC Standard Review Plan, Section 9.2.5
4. Ebasco Specification CAR-SH-M24, Spent Fuel Pool Heat Exchanger
5. Ebasco Specification CAR-SH-M13, Class 3 Centrifugal Pumps
6. Ebasco Specification CAR-SH-M49Z, Basket Strainers
7. US NRC Regulatory Guide 1.13, Revision 1, "Spent Fuel Storage Facility Design Basis"
8. FSAR Section 9.1.3

D. SYSTEM DESCRIPTION:

1. The FPCS shall provide two 100 percent capacity cooling loops capable of removing residual heat from the spent fuel. Each loop shall consist of a fuel pool heat exchanger, a fuel pool cooling pump, and a fuel pool strainer and shall be capable of cooling the new and spent fuel pools.

2. The FPCS shall be sized so that the temperature of the pool should be kept at or below the pool concentrate design temperature (150°F) under all conditions.

3. The Fuel Handling Building consists of two storage facilities having two sets of new and spent fuel pools which are served by two FPCS.

4. Each cooling loop shall be provided with one fuel pool cooling pump. The pump suction lines shall penetrate the fuel pool wall at least 10 feet above the fuel assemblies to prevent uncovering the fuel assemblies to prevent uncovering the fuel assemblies as a result of a postulated suction line rupture. Emergency cooling connections (valving and blind flanges) shall be provided to permit the installation of portable pumps to bypass each of the fuel pool cooling pumps.

5. Each cooling loop shall be provided with one fuel pool heat exchanger. Component cooling water shall be supplied to the shell side of the heat exchanger, while the fuel pool water shall be pumps through the tubes by the fuel pool cooling pump, and back to each of the pools. Basket-type strainers shall be provided on the cooling pumps suction line.

6. All FPCS piping in contact with fuel pool water shall be austenitic stainless steel. The piping shall be welded—except at the pumps, heat exchangers, and control valves—where flanged connections are provided for ease of installation and maintenance.

7. Manual stop valves shall be used to isolate equipment and lines and manual throttle valves shall be used to provide flow control. Valves in contact with fuel pool water shall be of austenitic stainless steel or an equivalent corrosion-resistant material.

8. Control Room and local alarms shall be provided to alert the operator of high and low pool water level and high temperature in the fuel pool. A low flow alarm shall be provided to warn of interruption of cooling flow.

9. The location of the inlet and outlet connections to the pools shall be located to prevent the possibility of coolant flow "short circuiting" the pool.

D. SYSTEM DESCRIPTION: (continued)

10. Floor and equipment drain sumps and pumping systems shall be provided to collect and transfer SFPCS leakage to the Waste Processing System. High-level alarms shall be provided and annunciated in the Waste Processing Control Room when high sump level is reached.

11. The new fuel pool and spent fuel pools shall be furnished with stainless steel liners. These liners shall be classified as non-nuclear safety; however, the liners shall be designed and constructed in accordance with the applicable portions of the ASME Section III code requirements. The fuel transfer canal, the main fuel transfer canal, and the cask-loading pit shall be furnished also with stainless steel liners.

12. Provisions shall be made to provide normal makeup water to the fuel pool from the refueling water storage tank. An emergency makeup connection shall also be provided so the emergency service water can be used as a backup source of makeup water. Makeup water shall normally be pumped to the pool by the fuel pool cooling pumps. Emergency cooling connections (valving and blind flanges) shall be provided to permit the installation of portable pumps to bypass each of the fuel pool cooling pumps. Provisions shall be provided so that the fuel pool cleanup loop pumps may also be used to provide the makeup water to the pools.

13. Draining or syphoning of the spent and new fuel pools via piping or hose connections to these pools or transfer canals shall be prevented by the locations of the penetrations, limitations on hose length, and termination of piping penetrations flush with the liner.

14. Safety class isolation valves shall be provided between the cooling loop and the cleanup loop.

E. SAFETY REQUIREMENTS:

The FPCS shall be designed in accordance with ASME Boiler & Pressure Vessel Code, Section II, Class 2 and Seismic Category I requirements. The SFPCS shall meet the requirements of NRC General Design Criteria 2, 4, 44, 45, 46, 61, and 63.

Each of the fuel pool cooling pumps shall be powered such that each pump receives power from a separate source. Provisions shall be made such that if a total loss of off-site power should occur, the operator has the option of transferring at least one pump to the emergency power source.

In the event of a single failure in one of the spent fuel cooling loops, the other loop shall provide adequate cooling.

The SFPCS shall be protected against the effects of internally and externally generated missiles.

E. SAFETY REQUIREMENTS: (continued)

The SFPCS shall be located in the Fuel Handling Building which is designed to Seismic Category I requirements as well as to withstand the effects of tornados.

F. ATTACHMENTS:

US NRC Standard Review Plan, Section 9.3.1, Revision 1, dated July 1981.

G. REVIEW AND APPROVAL:

Prepared by: _____ * _____

Reviewed by Lead System Engineer: _____ * _____

Approved by Mech Design Engineering Supervisor: _____ * _____

Accepted by Mech Design Supervisor: _____ * _____

Accepted by I&C Supervising Engineer: _____ * _____

*--Signatures/initials located in DBD-110, Rev. 0

REVISION SUMMARY

DBD-110 Revision 6

Basis for revision is ESR 97-00636.

The following changes were made in this revision:

Page 4, Section 2.1.10	Added - "Additional fuel pool heatload applicability documentation can be found in ESR 97-00636 (Reference 4.5.18)." Also removed cycle specific case designations.
Page 17, Section 4.5.18	Added ESR 97-00636 to list.

DBD-110 Revision 7

Basis for revision is ESR 99-00208.

The following changes were made in this revision:

All pages	Revised DBD revision number and number of pages.
Page 9, Section 2.2.2	Replaced the first sentence with wording provided in ESR 99-00208.
Page 17, Section 4.5.19	Added ESR 99-00208 to list.

CAROLINA POWER & LIGHT COMPANY

SHEARON HARRIS NUCLEAR POWER PLANT

DESIGN BASIS DOCUMENT

SERVICE WATER SYSTEM
TRAVELING SCREENS AND SCREEN WASH SYSTEM
WASTE PROCESSING BUILDING COOLING WATER SYSTEM

DBD-128

NOTE: Effective as of 03/31/87, full responsibility for the maintenance of this document and for subsequent modifications made or required to be made to this document is assumed by Carolina Power & Light Company ("CP&L"). Ebasco Services Incorporated has no responsibility for maintenance and modifications after said date.

REVISION	DATE	PREPARED BY	INDEPENDENT REVIEW BY	APPROVED BY
0	01/19/87	R. LOCURTO	E. RAINERO	M. G. GAGLIARDI
1	11/08/89	ED WILLIAMS	D. P. KNEPPER	R. A. STEWART
2	4/24/96	TOM SCATTERGOOD	JULIE TURNER	CHERYL BROWN
3	6/25/96	KEN RAMSEY	DAVE HAWLEY	CHERYL BROWN
4	12/11/96	KEN RAMSEY	JULIE TURNER	CHERYL BROWN
5	4/4/97	KEN RAMSEY	MARK MCDANIEL	CHERYL BROWN
6	6/18/97	JULIE TURNER	LESLIE OAKLEY	D. M. FRANKLIN
7	2/3/98	Julie Turner	G. O. White	D. M. Franklin
8	12/7/98	Ben Pugh	[illegible]	[illegible]

RECEIVED
DEC 08 1998
HNP
DOCUMENT CONTROL

4/3

TABLE OF CONTENTS

Section		Page
1.0	FUNCTION	3
2.0	DESIGN BASES AND ASSUMPTIONS	3
2.1	General System Requirements	3
2.2	Instrumentation and Control	17
2.3	Electrical	26
2.4	Structural	29
2.5	Materials and Chemistry	30
2.6	Failure	35
3.0	DESIGN MARGIN	37
4.0	DOCUMENT REFERENCE LIST	38
5.0	APPENDIX	46

1.0 FUNCTION

The Service Water System (SWS) provides cooling water to remove heat from plant auxiliary systems and equipment. The system consists of two primary interconnected subsystems, Normal Service Water (NSW) and Emergency Service Water (ESW). Normal service water removes plant heat loads from auxiliary components associated with the Power Conversion System, reactor operation, and miscellaneous building services during normal plant operation, including start-up and shutdown. Waste heat from these sources is dissipated in the plant cooling tower. Normal service water provides all cooling water requirements to the emergency service water portion of the loop during normal operating modes. Emergency service water removes essential plant heat loads associated with reactor auxiliary components for dissipation in the plant ultimate heat sink during emergency operation. This is a reactor safeguard system and is isolated from all nonessential loads while performing its function.

The traveling screens are intended to prevent ingestion of debris into the cooling water makeup, emergency service water, and fire service water pumps. These pumps take suction from the main and auxiliary reservoirs. The screen wash systems will wash debris from the traveling screens.

The Waste Processing Building Cooling Water System (WPBCWS) provides cooling water to various plant components located in the Waste Processing Building (WPB) during all phases of plant operation and shutdown and serves as an intermediate system between the Waste Processing System (WPS) and the SWS.

2.0 DESIGN BASES AND ASSUMPTIONS

2.1 General System Requirements

2.1.1 The Emergency Service Water System (ESWS) is designed to provide cooling water at a maximum temperature of 95°F during emergency operation. During postulated emergency conditions, it is estimated that the Auxiliary Reservoir Ultimate Heat Sink (UHS) will have an initial maximum service water temperature of 94.2°F. After 30 days, the maximum service water temperature is estimated to remain below 95°F.

The UHS analysis for HNP is documented in calculations SW-0081, SW-0083, SW-0084, and SW-0085. The analysis has determined the maximum expected ESW temperature based on the maximum expected evaporative losses from the Auxiliary and Main reservoirs following a Loss of Coolant Accident (LOCA). The UHS analysis assumes the worst meteorological conditions per SW-0081 and the FSAR and the minimum reservoir levels per the HNP Technical Specifications. The heat transfer from the Containment Fan Coolers (CFCs) and the RHR/CCW heat exchangers were maximized (SW-0083) and are based on maximum safeguards operation (two trains operating). The ESW and CCW flow account for uncertainties in instrumentation and to provide margin.

2.1 General System Requirements (continued)

The maximum calculated ESW temperature is 94.2°F. This temperature is below the ESW design temperature of 95°F which confirms that the design temperature is acceptable for the ESWS. The UHS analysis is based on the volume of water corresponding to a Main Reservoir level of 205.7 feet. However, to ensure the flow requirements listed in section 2.1.4 are met, the UHS minimum Main Reservoir level is 215 feet as reflected in Tech Specs.

2.1.2 Two independent water sources are provided for ESWS redundancy; the auxiliary reservoir as the primary source and the main reservoir as a backup. Both reservoirs are seismic Category I structures and either is capable of supplying sufficient cooling water to bring the plant to safe shutdown following a design basis accident.

2.1.3 Two redundant ESW trains, A and B, are provided in order to meet single active or passive component failure criteria. The systems meet 10CFR50 Appendix A and GDC-2, 5, 44, 45, and 46. Each train includes an emergency service water pump, self-cleaning strainer, service water booster pump, associated piping, valves, and instrumentation. System components are Nuclear Safety Class 2 and 3.

2.1.4 Each of the ESW pumps are designed to deliver a nominal 20,000 gpm at 225 ft TDH. Pump performance is monitored by OST-1214, OST-1215, EPT-250, and EPT-251. (Pump performance previously monitored by EPT-150. Ref. calc SW-0051, Att. 5) Flow requirements to individual ESWS components are based on the required heat removal rates of those components. The following is a summary of the minimum required capacities to individual ESWS components (with source references in parentheses):

Component Cooling Water Heat Exchanger (SW-0048)	8,250 gpm
Reactor Auxiliary Building HVAC Chillers (ESR 95-00376)	2,000 gpm
Standby Diesel Generator Jacket Water Coolers (ESR 95-00548)	800 gpm
Emergency Supply to Steam Generator Auxiliary Feed Pumps (See note below)	N/A
Charging Pump Oil Coolers—two per train (SW-0075)	40 gpm
Supply To SSE Fire Protection Booster Pumps (SW-0043)	150 gpm
Containment Fan Coolers-two per train (ESR 96-00525, see Note 1)	2,600 gpm
PASS Chiller Supply Line (PCR-5204)	150 gpm

2.1 General System Requirements (continued)

NOTE 1: A flow rate of 2720 gpm, with 16 tubes plugged per safety train was used for calculation HNP-M/MECH-1008. This was revised to 2600 gpm per ESR 96-00525 and found to be acceptable.

ESW Screen Wash Pumps (CAR-SH-M-011)	270 gpm
ESW Strainer Backwash (ESR 94-00382)	650 gpm
ESW Intake Structure Air Coolers (ESR 96-00284; ESR 95-01000; see note below)	N/A
TDAFWP Oil Cooler (See note below)	N/A
	14,910 gpm

Note that required minimum flow per component is often based on the most limiting accident condition for that component. Since the most limiting accident conditions may differ from system test conditions, refer to SW-0080, EPT-250, and EPT-251 for individual flow requirements under test conditions. For LOCA/MSLB events coincident with a LOOP the containment fan coolers experience water hammer and a brief period of two phase flow. This condition has been evaluated per ESR 97-0008, ESR 97-00125, calculations HNP M/MECH-1014, and HNP M/MECH-1018 and found to be acceptable. (Reference NRC Generic Letter 96-06)

Note that Emergency AFW supply was neglected based on load infrequency. (ESW supplies AFW pumps and coolers only in the event of loss of condensate.)

NOTE: Flow to A train ESW Intake Structure Air Coolers has been isolated per ESR 96-00284. Flow to B train ESW Intake Structure Air Coolers has been permanently isolated and removed per ESR 95-01000.

2.1.5 Pipe sizing calculations were performed on the basis of maintaining a flow velocity in the range of 7-10 feet per second at the required flow rate.

2.1.6 The ESW service water booster pump is provided to ensure that cooling water pressure inside the containment fan cooler units is higher than containment pressure during a LOCA. This prevents leakage of containment radioactivity into the ESWS. An orifice downstream of the fan cooler units provides increased system resistance during booster pump operation. The booster pump is placed in service by an SIS. Start of the booster pump causes the orifice to be placed into service by closing the orifice bypass valve. Flow bypasses the booster pump and orifice during normal plant operation.

2.1.7 Isolation of nonessential cooling loads is provided upon initiation of an SIS (PASS is not isolated).

2.1 General System Requirements (continued)

2.1.8 Cross-connecting ESW trains is not permitted following ESW System actuation in order to maintain independence of redundant safety-related flow paths. Cross-connections may exist during normal plant operation to provide NSW supply and return paths to both ESW trains. Where connections to both trains are provided, valve positions will be controlled, either administratively or by design, to ensure that both safety-related ESW trains are not connected following ESW actuation.

2.1.9 The ESWS is designed to either withstand or be protected from the effects of a safe shutdown earthquake, a design basis tornado, maximum flood levels, and a high-energy line break without loss of safety function.

2.1.10 ESW System function is maintained assuming loss of off-site power in conjunction with a single active or passive component failure or environmental effects in 2.1.9.

2.1.11 Freeze protection is provided for the ESWS by heat tracing piping exposed to outdoor environment during system non-operating status. Ice formation in the intake channels is not expected to be severe enough at the plant location to jeopardize system operation. ESW pump operation is initiated at temperatures less than 35°F in the auxiliary reservoir to prevent system freezing.

2.1.12 ESWS temperature control is provided by balancing the flow of individual branch lines using combination of orifices and manual throttle valves.

2.1.13 Automatic operation of the ESWS is provided upon initiation of an SIS. Remote manual start-up and shutdown capability is also provided in the Control Room.

2.1.14 Adequate clearance for in-service inspection of ASME III Class 2 and 3 components is considered in system design.

2.1.14.A Seal water flow to the ESW pumps is maintained during nonoperating periods by allowing flow through the screen wash pumps. Since only 2 gpm is required to flow to the seals when the ESW pump is not running, normal service water header pressure can supply this. In the nonoperating condition, the constant seal water supply ensures cleanliness and prevents overheating of ESW pump seals during start-up of the ESW pump.

2.1.15 All ESW piping, 24-inch diameter and larger, is internally coated due to the corrosive properties of the service water. The internal coating protects the pipe from corrosion; however, any pinholes in the coating enhances and accelerates local corrosion. The inspection and repair of smaller diameter piping is not easily accomplished and therefore is not lined. Any areas of this smaller diameter (unlined) pipe which become damaged due to corrosion should be cut out and replaced.

2.1.16 The NSWS is designed to provide cooling water at a maximum temperature of 95°F during normal and shutdown operation.

2.1 General System Requirements (continued)

2.1.17 The NSWS flow path includes both nonsafety and safety-related components. The safety-related portion of the system relies upon ESWS and not NSWS to perform its safety function. Therefore, NSWS redundance is not required.

2.1.18 The NSWS is a continuous operating system under normal plant conditions. Two 100 percent NSW pumps are provided for system reliability. Cooling water is supplied by the plant cooling tower.

2.1.19 The NSWS is designed to provide the maximum cooling water demands of the power plant. Each of the NSW pumps is designed to deliver a nominal 50,000 gpm at 185 feet TDH. Flow requirements to individual NSWS components are based on the required heat removal rates of those components. Below is a list of NSW components and the reference document specifying the required individual heat removal rate and/or cooling flow capacity:

Component Cooling Water Heat Exchanger (SW-0048)	8,250 gpm
Reactor Auxiliary Building HVAC Chillers (ESR 95-00376)	2,000 gpm
Standby Diesel Generator Jacket Water coolers (ESR 95-00548)	800 gpm
Boron Thermal Regeneration Chillers (W Spec G-678868)	414 gpm
Charging Pump Oil Coolers—two per train (SW-0075)	40 gpm
Makeup to RAB Evaporator Air Coolers (9-RAB-1B)	10 gpm
Containment Fan Coolers—per train (ESR 95-00034, SW-0078)	2,720 gpm
Containment Fan Coil Units (NNS) (CAR-SH-BE-18)	2,400 gpm
WPB Cooling Water Heat Exchangers (CAR-SH-M-71A)	10,000 gpm
WPB HVAC Chiller (CAR-SH-BE-05)	5,200 gpm
Makeup to WPB Evaporative Air Coolers (9-WPB-7H)	20 gpm
Turbine Building Auxiliaries, max. (SW-0043)	11,032 gpm
Plant Sampling System (VM-PQY, 1364-52911)	87 gpm

2.1 General System Requirements (continued)

NSW Strainer Backwash (CAR-SH-M-59)	2,000 gpm
Makeup to TB Evaporative Air Cooler (9-TB-F)	2 gpm
ESW Intake Structure Air Coolers (ESR 96-00284; ESR 95-01000; see note below)	N/A
Turbine Drive Auxiliary Feed Pump Oil Cooler (CAR-SH-M-05), see note below	N/A
Radiation Monitor Coolers (PCR-1389)	175 gpm
CW & SW Chlorination System (PCR-4439)	N/A
	45,150 gpm

NOTE: Flow to A train ESW Intake Structure Air Coolers has been isolated per ESR 96-00284. Flow to B train ESW Intake Structure Air Coolers has been permanently isolated and removed per ESR 95-01000.

Note that the TDAFW requirement (12 gpm) is neglected due to the infrequency of this load.

All the above loads are not expected to occur simultaneously, thus resulting in reduced overall system demand.

2.1.20 Each NSW pump is rated at 185 feet TDH at design flow conditions, based on the calculated system resistance through the Turbine Building flow path and the RAB flow path. Pipe sizing calculations were performed on the basis of maintaining a flow velocity in the range of 7-10 feet per second.

2.1.21 During normal shutdown, both NSW pumps may be used to achieve an increased rate of cooling of the Reactor Cooling System. During the mode of operation, the NSW pumps develop 79,000 gpm, and both service water trains in the RAB are used. The NSWS is capable of supplying each RAB train with 20,700 gpm at this condition in addition to supplying cooling water to other plant services.

During normal plant conditions, ESW or NSW pumps may also be used to supply cooling water to the safety-related standby containment fan coolers. This is required to limit the containment temperature to the Technical Specification maximum of 120°F.

2.1.22 NSW component temperature control is provided by the use of temperature control valves on branch lines of major service water users in the Turbine Building loop. A combination of orifices and manual throttle valves is used to provide system flow balance on other branch lines.

2.1 General System Requirements (continued)

2.1.23 Remote monitoring of NSWS flow, temperature, and intake level are provided in the Control Room. Provisions have also been made for local instrumentation for equipment performance monitoring and testing. Control of the NSW pumps is provided in the Control Room.

2.1.24 Two traveling screens are installed in the cooling tower makeup pump bays in the cooling tower intake structure. The screens rotate as required to present clear sections through which water flows to the pump suction. As the screen rotates, screen wash water is sprayed through nozzles to remove debris. Trash is washed into a collection trough.

Piping is arranged to allow the cooling tower makeup screen wash pump to provide wash water to the emergency service water screens as backup.

2.1.25 There are two traveling screens associated with each Emergency Service Water (ESW) Pump. One is in the intake bay of the Cooling Tower Makeup and ESW Intake Structure (Main Reservoir); the other is in the ESW Screening structure (Auxiliary Reservoir). Depending on the suction source selected, one of the units rotates to keep a clear screen through which the pump draws its water. As with the other traveling screens, water is sprayed through them to wash trash and debris into a collection trough.

2.1.26 Each ESW pump has its own screen wash pump which takes suction from the discharge of the corresponding ESW pump. Each screen wash pump provides wash water to the corresponding screens on both structures. To enhance reliability, there are no provisions for cross-connecting screen wash between ESW pumps; however, as mentioned above, wash water may be taken from the cooling tower makeup Screen Wash System. In addition, emergency service water screens 1A and 4A may receive wash water from the Fire Protection Screen Wash System.

Screen 4A was intended as an ESW screen for Unit 2. Since Unit 2 will not be built, Screen 4A's sole purpose is to protect the diesel-driven fire service pump.

The screen wash pump also provides the source of bearing lubrication and seal water for the ESW pump. The ESW pumps will provide self-lubrication to the pumps' bearings and seals upon loss of external bearing lubrication and seal injection water.

2.1.27 The fire pumps located in the ESW Screening Structure (Auxiliary Reservoir) utilize ESW traveling Screens 4A and 1A in Bays 1 and 8, respectively. Two fire service screen wash pumps are installed; they take suction from the auxiliary reservoir in Bays 1 and 8 of the screening structure. The discharge header is cross-connected so that either pump can wash both screens.

2.1.28 The portion of the cooling tower makeup traveling screens above the operating deck is designed for 30 lb/sq ft. wind pressures. (All other screens are indoor.) All screens are designed for a 5-foot pressure difference across the screen.

2.1 General System Requirements (continued)

2.1.29 The ESW traveling screens and their supports are seismic Category I. They are designed to withstand the SSE combined with design load without exceeding 90 percent of yield and the OBE loading combined with design load with no increase in allowable stress. Design load consists of a head . differential of 5 feet and the forces induced by initial movement of the screen when loaded against the 5-foot head differential at normal water level. In addition, all components are designed to withstand the maximum of either a head differential of 10 feet or 1/3 maximum postulated depth of water in chamber with seismic load acting concurrently without exceeding the allowable yield stress of materials.

2.1.30 The Emergency Service Water Screen Wash Pumps and screen wash piping are classified as Code Class 3 and are designed and analyzed to the requirements of ASME B&PV Section III. The system is designed to be operable during the DBE. All other screen wash piping and pumps are designed per ANSI B31.1.

2.1.31 The Traveling Screens and Screen Wash System is designed to operate outdoors. The ambient temperature range is -2 to 105°F. The housing for each screen has electric heaters for freeze protection. Those portions of the Service Water System piping in the Emergency Service Water Screening Structure and Emergency Service Water and Cooling Tower Makeup Water Intake Structure which are exposed to the outdoor elements are heat traced and insulated. Since the heat tracing is required only to maintain the essential portions of the Service Water System in a condition of readiness prior to system use, the heat tracing is not safety-related nor is it connectable to the on-site emergency power supply. Failure of the heat tracing will be alarmed in the Control Room.

2.1.32 Design conditions and parameters for the traveling screen wash pumps are:

2.1 General System Requirements (continued)

2.1.33 Cooling Tower Makeup Screen

Screen

Quantity	2
Manufacturer	Envirex
Screen Width	9 ft. 0 in.
Chamber Width	10 ft. 2 in.
Operating Deck Elevation	262 ft.
Invert Elevation	190 ft.
High Water Elevation (HWL)	255 ft.
Normal Water Elevation (NWL)	220 ft.
Low Water Elevation (LWL)	215.0 ft.*

Flow through one 100 percent clean screen

	Water Depth	Flow	Velocity
At NWL	30 ft.	67 CFS	0.44 FPS
At LWL	15.7 ft.	63 CFS	0.48 FPS

Lifting Speed of Baskets (approx.)	2.5 & 10 fpm
Screen Mesh	
W&M Wire Gage	14
Diameter	.08 in.
Clear Openings	3/8 in. sq.

Spray - One Row of Spray Heads with 21/64 in. Orifice	
at 80 psig	234 gpm
at 100 psig	260 gpm

Drive Motor

Manufacturer	Westinghouse
Voltage/Phase/Frequency	460/3/60
Synchronous Speed	1800/450/rpm
Horsepower	7.5/1.875

Speed Reducer

Manufacturer	Westinghouse
Model	88Q
Ratio	452.6 to 1
Output Speed (approx.)	3.87/.966 rpm

* Revised to reflect Technical Specification minimum Main Reservoir level needed to provide adequate flow to safety related heat exchangers served by ESWS.

2.1 General System Requirements (continued)

2.1.34 Emergency Service Water Screens - Main Reservoir Screen

Quantity	2
Manufacturer	Envirex
Screen Width	7 ft. 0 in.
Chamber Width	8 ft. 2 in.
Operating Deck Elevation	262 ft.
Invert Elevation	190 ft.
High Water Elevation (HWL)	255 ft.
Normal Water Elevation (NWL)	220 ft.
Low Water Elevation (LWL)	215.0 ft.*

Flow through on 100 percent clean screen

	Water Depth	Flow	Velocity
At NWL	30 ft.	49 CFS	0.41 FPS
At LWL	14.5 ft.	47 CFS	0.82 FPS

Lifting Speed of Baskets (approx.)	2.5 & 10 fpm
Screen Mesh	
W&M Wire Gage	14
Diameter	.08 in.
Clear Openings	3/8 in. sq.
Spray - One Row of Spray Heads with 21/64 in. orifice	
at 65 psig	See ESR 95-00799
at 80 psig	176 gpm
at 100 psig	197 gpm

Drive Motor

Manufacturer	Westinghouse
Voltage/Phase/Frequency	460/3/60
Synchronous Speed	1800/450/rpm
Horsepower	5/1.25

Speed Reducer

Manufacturer	Westinghouse
Model	76Q
Ratio	450.0 to 1
Output Speed (approx.)	3.89/.973 rpm

* Revised to reflect Technical Specification minimum Main Reservoir level needed to provide adequate flow to safety related heat exchangers served by ESWS.

2.1 General System Requirements (continued)

2.1.35 Emergency Service Water Screens - Auxiliary Screen

Quantity	3 (one screen for Fire Service only)
Manufacturer	Envirex
Screen Width	7 ft. 0 in.
Chamber Width	8 ft. 2 in.
Operating Deck Elev.	262 ft.
Invert Elevation	231 ft.
High Water Elev. (HWL)	255 ft.
Normal Water Elev. (NWL)	252 ft.
Low Water Elev. (LWL)	246.5 ft.

Flow through one 100 percent clean screen

	Water Depth	Flow	Velocity
At NWL	21 ft.	53 CFS	0.64 FPS
At LWL	15.5 ft.	50 CFS	0.81 FPS

Lifting Speed of Baskets (approx.)	2.5 & 10 fpm
Screen Mesh	
W&M Wire Gage	14
Diameter	.08 in.
Clear Openings	3/8 in. sq.
Spray - One Row of Spray Heads With 21/64 in. orifice	
at 65 psig	See ESR 95-00799
at 80 psig	176 gpm
at 100 psig	192 gpm

Drive Motor

Manufacturer	Westinghouse
Voltage/Phase/Frequency	460/3/60
Synchronous Speed	1800/450/rpm
Horsepower	2/0.5

Speed Reducer

Manufacturer	Westinghouse
Model	54Q
Ratio	305.9 to 1
Output Speed (approx.)	5.7/1.4 rpm

2.1 General System Requirements (continued)

2.1.36 Cooling Tower Makeup Screen Wash Pump

Pump

Quantity	One Pump serves 2 Cooling Tower Makeup Screens plus backup for one ESW Screen
Manufacturer	Crane-Deming
Model No.	5063
Pump Designation	Double Suction
Class of Pump	Radial
Mounting Type	Horizontal
Casing Type	Horizontal Split
Suction Type	Double Suction Nonself Priming
No. of Stages/ Impeller Arrangement	1/Closed
Design Capacity/Head	1080 gpm/160 ft.
Pump Casing Design Pressure	200 psig
Minimum Recirculation For Continuous Operation (approx.)	250 gpm
NPSH Required	20 ft.
Shutoff Head	178 ft.
Runout Capacity/Head	2300 gpm/71 ft.
Speed	1750 rpm
Break Horsepower at Design Conditions	58.98

Motor

Manufacturer	Reliance
Voltage/Phase/Frequency	460/3/60
Synchronous Speed	1800 rpm
Horsepower	75

2.1 General System Requirements (continued)

2.1.37 Emergency Service Water Screen Wash Pump

Pump

Quantity	Two—one for each set of Screens (one screen in each reservoir; only one in use)
Manufacturer	Crane-Deming
Model No.	3065
Pump Designation	End Suction
Class of Pump	Radial
Mounting Type	Horizontal
Casing Type	Vertical Split
Suction Type	Single Suction Nonself-priming
No. of Stages/ Impeller Arrangement	1/Open
Design Capacity/Head	270 gpm/110 ft.
Pump Casing Design Pressure	200 psig
Minimum Recirculation for Continuous Operation (approx.)	100 gpm
NPSH Required	10 ft.
Shutoff Head	170 ft.
Runout Capacity/Head	360 gpm/38 ft.
Speed	3500 rpm
Break Horsepower at Design Conditions	13.18

Motor

Manufacturer	Reliance
Voltage/Phase/Frequency	460/3/60
Synchronous Speed	3600 rpm
Horsepower	15

2.1.38 Fire Service Screen Wash Pump

Pump

Quantity	One to wash both screens plus one standby
Manufacturer	Crane-Deming
Model No.	4700
Pump Designation	Turbine
Class of Pump	Mixed
Mounting Type	Vertical
Suction Type	Self-priming
No. of Stages Impeller Arrangement	8/Semi-Open
Design Capacity/Head	540 gpm/250 ft.
Pump Casing Design Pressure	200 psig

2.1 General System Requirements (continued)

Minimum Recirculation For Continuous Operation (approx)	310 gpm
NPSH Required	10 ft.
Shutoff Head	336 ft.
Runout Capacity/Head	770 gpm/44 ft.
Speed	1750 rpm
Break Horsepower at Design Conditions	44.25
Setting Length	30 ft. 6 in.

2.1.39 Two 100 percent capacity WPB cooling water pumps and heat exchangers are provided for redundancy and to permit maintenance on equipment not in service. The design flow rate for the pumps is 6000 gpm. The TDH at design flow is 195 feet. Design pressure and temperature of the pumps is 150 psig and 125°F, respectively.

Design heat transfer duty for the heat exchangers is 61.81×10^6 Btu/hr. This is based on a WPB cooling water operating inlet temperature of 122.6°F and an operating outlet temperature of 105°F. The maximum service water temperature in the HX is 95°F with an expected outlet temperature of 107.4°F. Service water flow rate is 10,000 gpm. The design pressure of the shell is 105 psig. The design pressure of the tubes is 150 psig. The design temperature of the shell and tubes is 200°F.

2.1.40 During normal operation, the SW pressure on the tube side is higher than the WPBCWS pressure and any failure of the tubes would result in leakage of SW into the WPBCWS.

2.1.41 Relief valves are located downstream of the components to relieve the volumetric expansion due to a rise in water temperature subsequent to isolation of the cooling water lines to the components.

2.1.42 The equipment is specified to be suitable for operation within ambient indoor temperature range of 60 to 120°F.

2.1 General System Requirements (continued)

2.1.43 The WPB cooling water system flow requirements are:

Equipment Title	Number Units	Used Simul	Cooling Water per Unit (gpm)*	Total Cool Water Requirements (gpm)*
Waste Gas Compressor	2	1	50	50
Catalytic Recombiners	2	1	10	10
Waste Evaporators	2	1	780	780
RO Concentrates Evaporator	2	2	562	1,124
RO Module Precoolers	2	2	180	360
RO Module Chillers	2	2	360	720
Volume Reduction System	1	1	67	67
Waste Evap. Conc. Tank Vent Gas Condenser	1	1	15	15
Secondary Waste Evaporator	2	2	1,024	2,048
Radiation Monitor	2	2	50	100
Total - Normal Operation System Design				5,274 6,000

*Based on maximum temperature of 105°F.

2.2 Instrumentation and Control

2.2.1 The functions of the Service Water, Traveling Screens, and Waste Processing Building Cooling Water Systems are addressed in Section 1.0 of this DBD.

2.2.2 Adequate instrumentation and controls are provided to ascertain that functions defined in Section 1.0 are satisfactorily performed.

2.2 Instrumentation and Control (continued)

2.2.3 Service Water System

This system consists of two primary interconnected loops:

a. Normal Service Water (NSW)

b. Emergency Service Water (ESW)

2.2.3.1 Normal Service Water

2.2.3.1.1 During normal plant operation, the normal service water pump provides water to the Reactor Auxiliary Building (RAB), Turbine Building (TB), Waste Processing Buildings (WPB), and Containment Building (CB).

2.2.3.1.2 To protect the pump from cavitation, each pump chamber is provided with a level transmitter. The chamber LO and LO-LO level is alarmed and indicated in the Main Control Room. The chamber LO level is interlocked with the pump such that the pump cannot be started if LO level exists in the chamber.

2.2.3.1.3 To protect the pump bearing, a flow switch is provided to detect LO flow condition. The flow switch is interlocked such that the pump cannot be started if LO flow exists. To provide water for the bearing, a seal and CLG water booster pump is provided which starts automatically when the service water pump is started. To improve availability of seal water to start the pumps, potable and service water alternate sources are provided.

2.2.3.1.4 Bearing LO flow is alarmed in the main Control Room.

2.2.3.1.5 To evaluate the pump performance, a pressure transmitter/ pressure switch is provided at the pump discharge for pressure indication and LO alarm in the Control Room.

2.2.3.1.6 To evaluate the performance of the Service Water System, the service water inlet temperature is monitored by the plant computer.

2.2.3.1.7 To monitor the system flow going through the various buildings, a flow totalizer is installed to indicate the total flow.

2.2.3.1.8 To prevent water hammer during system start-up, the priming (time fill-up and component fill-up) is done by opening the discharge valve to a fixed position and the valve will move automatically to full open after a time delay. The isolation valves to the WPB, RAB, RCB, and TGB risers should have already been manually closed. Upon start-up, they should be slowly opened manually.

2.2.3 Service Water System (continued)

2.2.3.1.9 To prevent automatic start of the emergency service water pump upon NSW discharge LO-pressure, a LO-pressure alarm is provided in the Main Control Room to alert the operator that the standby pump must be started before the running pump trips. This will avoid water hammer.

2.2.3.1.10 To prevent damaging the NSW pump upon chamber LO-LO level, a LO-LO level alarm is provided in the Control Room to alert the operator to start the standby NSW pump before tripping the running pump to avoid water hammer.

2.2.3.1.11 A self-cleaning strainer is provided to remove the debris before water is circulated in the system. A differential switch is provided across the strainer to provide HI pressure alarm in the Control Room to alert the operator that the strainer is clogged.

2.2.3.1.12 The purpose of the service water leakage alarm, Window 4-5, is to alert the operator of a possible major line break for the following components:

AH 1-4
CCWHX A & B
WC-2 A & B

The Service Water System flow will be continually monitored by flow instrumentation located in the discharge lines. A line break upstream of the flow instrument would be indicated by a low flow reading and alarm. In addition, the discharge pressure for each pump is monitored. A major pipe break would be indicated by a low discharge pressure.

An abnormal flow and temperature condition is annunciated in the Control Room by appropriate alarms alerting the operator to the existence of a leak in the Service Water System. The specific high and low flow and high-temperature readings enables the operator to determine and locate the section of the Service Water System where the leak has occurred.

The basis of the alarm setpoints is to detect low flow to the components indicating a pipe break upstream. Flow rates on the return legs are not monitored.

2.2.3.2 Emergency Service Water

2.2.3.2.1 During normal operation, the NSW System provides water to the two headers (Trains A & B) via isolation valves. The emergency system operates during an accident condition and isolates the NSW system via isolation valves.

2.2.3 Service Water System (continued)

2.2.3.2.2 The emergency service water pump takes suction from the aux. reservoir or main reservoir. Manual isolation valves are provided in each reservoir to switch suction from aux. to main reservoirs.

2.2.3.2.3 To prevent ESW pump cavitation and vortexing, each pump chamber is provided with a level switch to provide an ERFIS alarm to indicate LO level (LSC 8752A(B) and LSC 8750A(B)). These ERFIS computer alarms are tied to an audible alarm on MCB to fulfill a licensing commitment. (Ref. SW-0082 for NPSHA to the ESW pumps.)

2.2.3.2.4 To maintain the adequate header pressure, a pressure transmitter is provided on each header to indicate pressure and LO-alarm and to start ESW on LO pressure.

2.2.3.2.5 The system is interlocked such that whenever ESW pump starts, the normal system will be isolated (inlet and discharge to CLG TWR) and valves to the auxiliary reservoir will open.

2.2.3.2.6 A self-cleaning strainer is provided to remove debris before discharging the water into the system. A differential pressure switch is provided across the strainer to provide HI pressure alarm in the Control Room to alert the operator that the strainer is clogged.

2.2.3.2.7 To evaluate the performance of the SW cooling, a temperature element is installed in each header. The SW temperature is monitored by the plant computer (ERFIS).

2.2.3.2.8 A flow element is provided in each header to monitor the required minimum pump flow and LO-flow is alarmed in the Control Room.

2.2.3.2.9 To provide the required flow and pressure to the safety fan coolers, a service water booster pump is provided which starts automatically upon ESW pump start. This pump provides a service water pressure which is higher than the expected containment pressure during accident conditions. This prevents potentially contaminated effluent from being released. This pressure must be above 45 psig at the highest safety fan cooler service water discharge piping.

2.2.3.2.10 To evaluate the booster pump performance, a pressure transmitter is provided at the pump discharge to indicate pressure and LO-alarm in the Main Control Room.

2.2.3.2.11 To evaluate the performance of CNMT fan cooler heat exchanger, a temperature element is provided to monitor the inlet temperature in the ERFIS.

A flow element is installed to monitor the SW flow to the fan cooler.

2.2.4 Traveling Screens

2.2.4.1 The basic design philosophy is predicted on local manual and automatic operation utilizing the following instrumentation and control devices.

2.2.4.2 Proximity switches mounted on a device sprocket shaft to control the tie between the reduced and screen drive sprocket shafts. This is accomplished by detecting shear pin on chain break.

2.2.4.3 Differential level controllers, which by sensing the differential level between upstream and downstream water flow, determine the screen clog condition.

2.2.4.4 Screen housing temperature control is used in the intake structures where the makeup water temperature can drop below 40°F.

2.2.4.5 Equipment status and abnormal conditions are remotely monitored for alarm and control. Some information is inputted into the plant computer for historical data and trend analysis.

2.2.4.6 Specific instrumentation and control features for the equipment listed on Section 2.2.4.7 are addressed on Sections 2.2.4.7.1, 2.2.4.7.2, and 2.2.4.7.3.

2.2.4.7 Traveling screens and screen wash systems have been furnished for the following pumps:

a. Cooling Tower Makeup (CTMU)
b. Emergency Service Water (ESW)
c. Fire Service Water

The screen mesh size for these pumps is 3/8 inch square. This size has been selected by using 50 percent of the smallest heat exchanger tube size in the system which it serves.

2.2.4.7.1 Cooling Tower Makeup (CTMU)

a. The system consists of two identically controlled traveling screens, two identically controlled valves, and one screen wash pump.

b. The traveling screens operate at two speeds:

Low speed which is manually controlled by means of a local jog push button. Low speed control is interlocked with the screen wash pump operating status and the proximity switch (tripper).

2.2.4 Traveling Screens (continued)

High speed is automatically controlled by differential level device. High-speed control is interlocked with the screen wash valve operating status (open) and the proximity switch (not tripped).

c. High differential level, proximity switch tripped, and motor overload activate an alarm in the Cooling Tower Makeup Control Panel Annunciator.

d. Traveling screen operating status and HI-HI differential signals are inputted into the plant computer for historical data and trend analysis.

e. The Cooling Tower Makeup (CTMU) screen wash valve open/close status is monitored by the plant computer.

f. The cooling tower makeup screen wash valve opens upon a high differential level signal.

g. The CTMU screen wash pump is manually and automatically controlled. Manual control is from the CTMU Control Panel.

h. High differential level and screen valve position are command signals used for the valve automatic operation.

i. Valve automatic operation is feasible only if the screen wash pump suction pressure is normal.

j. Low screen wash pump header pressure condition will be alarmed if the pressure remains low after a pump start attempt.

2.2.4.7.2 Emergency Service Water (ESW)

a. The system consists of traveling screens and screen wash equipment, located at the main and auxiliary reservoirs Bays 6 and 8.

b. ESW screen wash pump in normal, nonemergency condition is controlled by ESW pump run interlock. In emergency condition, this interlock is only a permissive and pump is automatically controlled by the Engineered Safeguards Sequencing (ESS) cabinet signal. Pump running condition is monitored on the ESS Light Box, but motor overload trip is monitored on the ESS cabinet.

c. The ESS cabinet and light box are located at 286' SWGR. Pump running status is monitored by the plant computer.

2.2.4 Traveling Screens (continued)

d. The ESW screen wash valve opens when the screen wash pump is running and the corresponding inlet valve is open. Valve position is monitored by the computer.

e. The ESW Main Reservoir Traveling Screen is provided with a two-speed control system (low, high).

- The low-speed control is a manual system utilizing local jog push buttons.

- The high-speed mode circuit is automatically armed when the screen wash pump is running.

f. The Auxiliary Reservoir Traveling Screen Operation is interlocked with screen wash pump running/not running status.

g. High differential water level is used to control the high-speed mode.

h. The screen operating/position status and HI-HI differential level signals are inputted to the plant computer for historical data and trend analysis.

2.2.4.7.3 Fire Service Water Screen Wash System

a. This system consists of screen wash pumps, screen wash valves, and traveling screen for the auxiliary reservoir.

b. Common control circuits are used for the fire service water screen wash pumps. Circuit selection is accomplished by the selector switch referred below.

c. A selector switch mounted on a control box, located at Bay 1 of the auxiliary reservoir, is used to select the operating pump.

d. The selected pump will start when the water valves are open and high differential condition exists at either Bay 1 or Bay 8 traveling screen.

e. Pump operating status, strainer differential pressure, and pumps discharge pressure signals are inputted into the plant computer.

f. The fire service screen wash pump valve at Bay 1 is a motor-operated valve which opens when a high differential level condition exists at either Bay 1 or Bay 8 traveling screen and when the valve at Bay 8 is open.

2.2.4 Traveling Screens (continued)

g. Valve at Bay 1 will shut when both differential levels at Bay 1 and Bay 8 traveling screens are not high or when valve at Bay 8 is closed.

h. Valve position is monitored by the plant computer.

i. The fire service traveling screen motor is a two-speed device.

The low speed is manually controlled by means of a local jog push button.

The high-speed control is automatically initiated when a high differential level at screen and normal wash pressure exists.

j. Signals from tripping proximity switch, screen motor status, and HI-HI differential level at the screen are inputted into the plant computer.

k. The fire service screen wash valve at Bay 8 opens when the ESW pump is not running and a high differential level condition exists at either Bay 1 or Bay 8 traveling screen.

l. Local manual operation is also provided for the above valve.

m. The fire service wash valve status is monitored by the plant computer.

2.2.5 Waste Processing Building Cooling Water System

This system consists of two cooling water pumps and several relief valves located downstream of the components to relieve the volumetric expansion after isolation of the cooling water lines to the components.

2.2.5.1 The WPB cooling water pumps are manually operated from the WPB Control Board.

2.2.5.2 The WPB cooling water pump cannot be started unless the discharge valve is not less than 10 percent open.

2.2.5.3 The WPB cooling water pump will be tripped if the pump suction pressure is low.

2.2.5.4 Low cooling water discharge pressure and low cooling water pump suction pressure conditions are alarmed at the Main Control Room annunciator.

2.2.5.5 The cooling water pump discharge valves are locally operated.

2.2.5.6 The cooling water surge tank valves are operated from the WPB Control Board.

2.2.5 Waste Processing Building Cooling Water System (continued)

2.2.5.7 Cooling water high radiation will prevent opening of the CW surge tank vent valve.

2.2.5.8 Vent valve open on cooling water high radiation is alarmed at the Main Control Room Annunciator.

2.2.5.9 The WP cooling water motor winding temperature is inputted into the WPB computer for historical data and trend analysis.

2.2.5.10 Status of the Waste Cooling Water System variables listed below are inputted into the WPB computer for historical data and trend analysis.

Surge Tank Level

Pump Discharge Pressure

Pump Discharge Hdr Flow

Surge Tank Low Level

Heat Exchangers Hdr Inlet Temperature

Pump Discharge Hdr Temperature

Surge Tank and Chem Addition Tank Temperature

Heat Exchanges Water Return Temperature

R O Concentrate Evap Pkg Cooling Water Return Temperature

Sec Waste Evap Pkg Cooling Water Return Temperature

Normal Serv Wtr Pump Discharge Manifold Temperature

Floor Drain R O Skids Precooler Water Outlet Temperature

R O Refrig Skid Chillers Cooling Water Outlet Temperature

Floor Drain R O skids Precooler Cooling Water Outlet Temperature

Evap Conc Tank Vent Gas Cooling Water Outlet Temperature

Surge Tanks and Chem Addition Tank Flow

R O Refrig Skid Chillers Cooling Water Outlet Flow

Floor Drain R O Skids Precooler Cooling Water Outlet Flow

WPB HVAC Chiller Service Water Inlet Flow

2.2.5 Waste Processing Building Cooling Water System (continued)

Heat Exchanger Service Water Inlet Flow

Floor Drain R O Skid, Laundry and Hot Shower, R O Skid

Precooler Cooling Water Outlet Flow

RO Concentrate Evap Pkg Cooling Water Return Flow

Sec Waste Evap Pkg Cooling Water Return Flow

Waste Gas Comp Cooling Water Flow

Catalytic Recombiner Cooling Water Flow

Waste Evap Pkg Cooling Water Return Flow

2.2.5.11 Indicators for the system variables listed below are provided in the Waste Processing Control Board (WPCB).

WPB Cooling Water surge Tank Level

WPC Water Pumps Discharge Hdr Flow

WPC Cooling Water Pumps Discharge Hdr Temperature

WPC Cooling Water Heat Exchange Hdr Inlet Temperature

2.2.5.12 Malfunction of the system variables listed below are alarmed at the Main Control Room Annunciator.

WPB Cooling Water Surge Tank Level Low

WPB Cooling Water Surge Tank Level Hi

2.2.5.13 The WST Evap Conc Tank Vent Gas Cln Clgw Outlet Temperature is recorded at the WP Control Board.

2.3 Electrical

2.3.1 The system electrical power supply for the Normal and Emergency Service Water, Screen Wash, Traveling Screens, and Waste Processing Component Cooling Water Systems is fed from ESF and Non-ESF Load Centers as shown in the tables below:

Service Water System

Load Operation Per DAC-1	Power Supply	Location
Normal Service Water Pumps (2): 3000 HP each/ Continuous	6.9 kV SWGR 1D 6.9 kV SWGR 1E	RAB EL. 286.0 RAB EL. 286.0
Emergency Service Water Pumps (2): 1300 HP each/ Continuous-Emergency	6.9-kV SWGR 1A-SA 6.9-kV SWGR 1B-SB	RAB EL. 286.0 RAD EL. 286.0

2.3 Electrical (continued)

Service Water System (continued)

Load Operation Per DAC-1	Power Supply	Location
Service Water Booster Pumps (2): 200 HP each/ Continuous Emergency	480-V SWGR 1A2-SA 480-V SWGR 1B2-SB	RAB EL. 286.0 RAB EL. 286.0
Discharge Strainer: 3/4 HP/ Continuous Emergency	480-V MCC 1B32-SB	Intake Structure
Motor Operated Valves/ Intermittent	1A2-SA 1B2-SB 14A1011	RAB EL. 286.0 RAB EL. 286.0 Intake Structure

Traveling Screens and Screen Wash System

Load Operation Per DAC-1	Power Supply	Location
Fire Service Screen Wash Pumps: 50 HP each/ Redundant	480-V MCC 1-4A1012	Intake Structure
Cooling Tower Makeup Service Water Pumps: 1250 HP each/ Continuous	6.9-kV SWGR 1D	RAB EL. 286.0
CTMU Screen Wash Pump (75 HP):	480-V MCC 1-4A1011	Intake Structure
ESW Screen/Continuous Start-up & Shutdown Wash Pumps: 15 HP each/ Continuous Emergency	480-V MCC 1B32-SB 480-V MCC 1A32-SA	Intake Structure
Emergency Intake Traveling Screen (Main): 5 HP each/Continuous Start-up and Emergency	480-V MCC 1B32-SB 480-V MCC 1A32-SA	Intake Structure Intake Structure

2.3 Electrical (continued)

Traveling Screens and Screen Wash System (continued)

Load Operation Per DAC-1	Power Supply	Location
Emergency Intake Traveling Screen (Aux): 2 HP each/Continuous Start-up & Emergency	480-V MCC 1A32-SA 480-V MCC 1B32-SB	Intake Structure Intake Structure
WPBCW Pump 1-4A 500 HP/Continuous	6.9-kV SWGR 1-4A	WPB EL. 211.0
WPBCW Pump 1-4B 500 HP/Continuous	6.9-kV SWGR 1-4A	WPB EL. 211.0
WPBCW Sump Pump 1-4A 7.5 HP/Intermittent	480-V MCC 1-431	WPB EL. 211.0
WPBCW Sump Pump 1-4B 7.5 HP/Intermittent	480-V MCC 1-4B31	WPB EL. 211.0
MOV 7WC-B1-1-4 1/8 HP/Intermittent	480-V MCC 1-4A23	FHB EL. 261.0
MOV 7WC-B2-1-4 1/8 HP/Intermittent	480-V MCC 1-4B23	FHB EL. 261.0

2.3.2 Electrical cables supplying power to the above systems are sized in accordance with SHNPP Unit 1 Electrical Design Criteria Nos. 8, 9, 10, 14, 17, 18, 19, and 20. (Ref. 4.5.4).

2.3.3 The cable and raceway system for subject systems is designed in accordance with SHNPP Unit 1 Electrical Design Criteria Nos. 3 and 4 (Ref. 4.5.3).

2.3.4 In the event of a failure, the ESF busses are fed from the emergency diesel generators and the non-ESF loads can be aligned with "A" or "B" train power.

2.3.5 Protection provided for 6.9-kV feeders and motors is discussed in Section 2.2 of DBD No. 202 (Ref. 4.5.4).

2.3.6 208/120-V power for the subject systems is provided by the following power panels fed from their respective MCCs:

PP 1A321-SA
PP 1B321-SB
PP 1A211-SA
1DP-1A-SI
PP 1D331
PP 2E331

2.4 Structural

2.4.1 The normal service water intake structure is a nonseismic structure, and the structural design basis requirements are described in Design Specification for Balance of Plant (CAR 1364.481S01).

2.4.2 The Emergency Service Water System (ESWS) structures support and protect the equipment that is intended to supply water to the Reactor Core Cooling System from the Auxiliary Reservoir or the Main Reservoir.

The structures of the ESWS consist of the following:

Auxiliary Dam

Auxiliary Separating Dike

Auxiliary Reservoir Channel

Emergency Service Water Intake Channel

Emergency Service Water Screen Structure

Emergency Service Water and Cooling Tower Makeup Intake Structure

Emergency Service Water Discharge Structure

Emergency Service Water Discharge Channel

Cooling water drawn from the Auxiliary Reservoir is transported to the ESWIS via gravity flow through the ESWS intake channel, ESWSS, and a series of buried piping. Water is discharged into the Auxiliary Reservoir through the ESW discharge structure and discharge channel.

Cooling water drawn from the Main Reservoir is transported to the ESWIS through the Cooling Tower Makeup Intake Channel, which serves as a redundant source.

The structures are seismic Category I and are described in Design Specifications for West Auxiliary Dam and spillway (CAR 1364-481S09), channels (CAR 1364-481S11), West Auxiliary Separating Dike (CAR 1364-481S13), and Emergency Service Water System Structures (CAR 1364-481S23).

2.4.3 The buildings housing these systems are seismic Category I. The structural design basis requirements are described in Design Specifications for various buildings as listed in Section 4.0, Document Reference List.

2.4.4 Equipment is mounted in accordance with the manufacturer's recommendations. The foundations are designed for loads furnished by the equipment manufacturer.

2.5 Materials and Chemistry

2.5.1 Service Water System

2.5.1.1 Materials of construction are based on plant cooling tower makeup water quality as follows:

Total Solids	147 ppm
Volatile Solids	53 ppm
Suspended Solids	30 ppm
Dissolved Solids	117 ppm
Silica as SiO_2	14 ppm
Calcium as Ca	8 ppm
Magnesium as Mg	3 ppm
Sodium as Na	15 ppm
Iron as Fe	1.4 ppm
Sulfate as SO_4	13 ppm
Chloride as Cl	15 ppm
Nitrate as N	0.3 ppm
Total Phosphates as P	0.65 ppm
M.O. alkalinity as $CaCO_3$	26 ppm
pH	6.5-7.5

This water chemistry was used as the design basis for equipment and component specifications. However, for the latest water chemistry, see Appendix, Section 5.2.

2.5.1.2 The above is a typical analysis of the water in the man-made lake. It is expected that the concentrations in the cooling tower water (i.e., the water which passes through the service water and circulating water systems) would be about 10 times higher.

2.5.1.3 A minimum corrosion allowance of 0.24 inch over 40-year plant life was included in determining pipe minimum wall thickness.

2.5.1.4 Full analysis of the reservoir water shall be performed every month and pH analysis performed every week per the cooling Tower Contract with BETZ Labs. The Waste Process Cooling Water System shall be sampled weekly by site chemistry. During accident conditions, the emergency service water shall be sampled by taking "grab" samples at the auxiliary reservoir.

2.5.2 Traveling Screens and Screen Wash System

2.5.2.1 Materials of construction are as follows:

2.5.2.2 Cooling Tower Makeup Screens:

Screen Mesh

- Mesh material	Stainless Steel Type 304
- Fastener Material	Stainless Steel Bolts or Attachments

Carrying Chain

- Rollers	ASTM A-582 - Type 416 - Hardened to Rc 38-42
- Pins	ASTM A-582 - Type 416 - Hardened to Rc 38-42
- Bushings	ASTM A-582 - Type 416 - Hardened to Rc 38-42
- Links	Hot-Dip Galvanized Steel
Frame	Structural Shapes - Structural Plate - As Identified on the manufacturer's drawing ASTM A-36 - Galvanized

Head Enclosures

- Type	Fully enclosed-gray color
- Material	Fiberglass

Spray System (Screen Spray Header)
Red Brass Pipe

Spray Nozzles

Spray Nozzle Material Aluminum-bronze
(ASTM B148 Grade A)

2.5.2 Traveling Screens and Screen Wash System (continued)

2.5.2.3 Emergency Service Water Screens - Main and Auxiliary Reservoirs

Screen Mesh

- Mesh material	Stainless Steel Type 304
- Fastener material	Stainless Steel Bolts or Attachments

Carrying Chain

- Rollers	ASTM A-582 - Type 416 - Hardened to Rc 38-42
- Pins	ASTM A-582 - Type 416 - Hardened to Rc 38-42
- Bushings	ASTM A-582 - Type 416 - Hardened to Rc 38-42
- Links	Hot-Dip Galvanized Steel

Head Enclosures

- Type	Fully enclosed-gray color
- Material	Fiberglass

Structural Frame

Structural Shapes - ASTM A-36 - Galvanized

Structural Plate - As identified on the manufacturer's drawing

Spray System (Screen Spray Header)

- Type Material	ASME SA-312 TP 304 Seamless Stainless Steel
- Spray Nozzle Material	Aluminum-bronze (ASTM B148 Grade A)

2.5.4.2 Cooling Tower Makeup Screen Wash Pump:

- Bed Plate	- A36-69
- Casing	- Cast Iron
- Casing Ring	- Impeller, and Impeller Ring - B145 - 70-4
- Shaft and Shaft Sleeve	- A-276-67-316
- Bearings	- Steel
- Shaft Seals	- BUNA N

2.5.2 Traveling Screens and Screen Wash System (continued)

2.5.2.5 Emergency Service Water Screen Wash Pumps:

- Bed Plate	-A36-69
- Upper and Lower Casing	- A351-CF8M
- Impeller	- A351-CF8M
- Shaft and Sleeve	- A276-67-316
- Bearings	- Steel
- Shaft Seals	- Mechanical Cartridge Seals Gland Plate - A351-CF8M Cartridge - Stainless Steel Type 316

2.5.2.6 Fire Service Screen Wash Pump:

- Motor Support	- A216-70WCB
- Discharge Elbow	- A216-70WCB
- Column Pipe	- A120-69
- Suction Bell	- A48-64
- Bowl or Casing	- A48-64
- Discharge Head	- A216-70WCB
- Seal Cage	- A48-64
- Diffuser and Guide Vanes	- A48-64
- Impeller - First Stage	- B145-70
- Impellers - Other Stages	- B145-70
- Impeller Nut	- B145-70
- Impeller Bowl Liner	- Ceramic
- Pump Shaft	- A276-67-410
- Drive Shaft	- A276-67-410
- Bearings	- Rubber
- Shaft Sleeves	- A276-67

2.5.2.7 Service water system piping materials:

- Most Class 3 lines are Carbon Steel ASME SA-106 GR B
- Connections to the spray headers are Stainless Steel ASM A312-304 for Class 3 and Brass ASTM B-43 for all others
- Seal Water lines are Stainless Steel ASTM SA-312 TP304
- All other lines are Carbon Steel ASTM A-53 GR B

2.5.2.8 Valve materials are typically Carbon Steel A/SA 216 WCB for 2-1/2 inch and larger valves and Carbon Steel A/SA 105 for 2 inches and smaller valves. The following valves are exceptions:

3SW-B5SA-1
3SW-B6SB-1
3SW-B8SA-1
3SW-B13SB-1
3SW-B14SB-1
3SW-B15SA-1

These valves are manufactured from SA351-CF3M stainless steel.

2.5.2 Traveling Screens and Screen Wash System (continued)

2.5.2.9 Water Chemistry of the Reservoirs is:

Constituents	Average Analysis
Total Volatile Solids	61 ppm
Total Suspended Solids	80 ppm
Total Dissolved Solids	137 ppm
Maximum Turbidity	500 ppm
M O Alkalinity (as $CaCO_3$)	37.8 ppm
Total Phosphate (as P)	2 ppm
Chlorides (as Cl)	15.1 ppm
Sulfates (as SO_4)	13.8 ppm
Nitrate (as N)	0.6 ppm
Sodium (as Na)	17.5 ppm
Calcium (as Ca)	8.5 ppm
Magnesium (as Mg)	3.5 ppm
Silica (as SiO_2)	19.6 ppm
Iron (as Fe)	1.7 ppm
pH	6.5-7.5

This water chemistry was used as the design basis for equipment and component specifications. However, for the latest water chemistry, see Appendix, Section 5.2.

2.5.3 Waste Processing Building Cooling Water System

2.5.3.1 Materials:

WPB Cooling Water Pumps have carbon steel casing, internals, and shafts.

WPB Cooling Water heat exchangers have carbon steel shell and 90-10 cooper nickel alloy tubes.

WPB Cooling Water surge tank is made of carbon steel.

The piping is made of carbon steel as per ASTM A-53, Grade B Specification. The valve bodies are typically made of carbon steel with stellate or stainless steel trim.

Exceptions to this are valves 3SW-B5SA-1, 3SW-B6SB-1, 3SW-B8SA-1, 3SW-B13SB-1, 3SW-B14SB-1, and 3SW-B15SA-1. The valve bodies of these valves are made from SA351-CF3M stainless steel.

2.5.3.2 Chemistry Requirements:

The WPB Cooling Water System is designed on the basis that the following water chemistry is maintained:

a.	Corrosion inhibitor	K_2CrO_4 or $K_2CR_2O_7$ 1000 ppm (CrO_4) for first week after filling system, 175-225 ppm (CrO_4) thereafter
b.	pH at 25 C	8.0 to 8.5
c.	Chloride ppm, max.	0.15

2.5.3 Waste Processing Building Cooling Water System (continued)

d.	Fluoride ppm, max.	0.15
e.	Makeup water	Demineralized water

2.5.3.3 Periodically, a sample of the WPB cooling water is taken from the WPB cooling water pump drains by the plant operator to ascertain that water chemistry specifications are met. Chemicals are then added to the cooling water surge tank and mixed by recirculation as necessary.

2.6 Failure

2.6.1 Service Water System

2.6.1.1 The piping and components of the Service Water System up to and returning from the isolation valves which separate the emergency service water header from the normal service water header are not designated as nuclear safety class or seismic Category I. The nonseismic Category I, nonsafety class, portion of the Service Water System is not considered available during accident and emergency conditions.

2.6.1.2 Protection of safety-related systems, structures, and components which includes the safety-related portions of the Service Water System from the effects of natural and accidental phenomena are discussed in Section 3 of the FSAR.

2.6.1.3 Each emergency service water pump with associated booster pump and valves is connected to a separate emergency bus. For the loss of off-site power condition, the Service Water System is designed to supply cooling water to only the required essential components. Under the conditions of a concurrent loss of coolant accident and loss of off-site power or main steam line break and loss of off-site power, any one of two pumps using the emergency power will be capable of supplying the required cooling capacity. In the worst case (LOCA coincident with a loss of off-site power), full service water system flow will be established approximately 30 seconds after a safety injection signal (SIS) is initiated. (The emergency service water pumps start a maximum of 22 seconds after an SIS signal. Time to establish flow may be longer based on 1SW-39 and 1SW-40 stroke times.)

2.6.1.4 The emergency diesel generators are capable of operating at fully loaded conditions with no cooling for a minimum of one minute and up to three minutes without adverse effects. Consequently, the performance of the diesel engines will not be affected by the time required to start the service water pumps and establish system flow.

2.6.1.5 Pump performance characteristics and associated discharge valve interlocks and permissives (refer to Section 2.2) were selected to minimize hydraulic transients.

2.6.2 Traveling Screens and Screen Wash System

2.6.2.1 The Emergency Service Water and Cooling Tower Makeup Intake Structure and Emergency Service Water Screening Structure are both designed to fully meet the requirements of General Design Criterion No. 4 including the dynamic effects of missiles occurring from equipment failures and from tornado-generated missiles. The Service Water System is designed to withstand the wind and missile loadings associated with the design tornado together with a loss of one pump motor due to an independent single failure without loss of capability for a safe cold shutdown.

2.6.2.2 Equipment in the Intake Structure is placed in individual bays and is separated by concrete walls. This arrangement will preclude damage to more than one redundant service water system train in the event of mechanical failure of a rotating piece of equipment.

2.6.2.3 The Screen Wash System motors and associated equipment are protected against tornado missile or other missile damage. The protective structures are designed to preclude the unlikely possibility of the pump motors flooding. The Emergency Service Water System screen wash equipment is protected against failure of nonseismic Category I equipment.

2.6.2.4 In the unlikely event of failure or blockage of the traveling screens or failure of the screen wash system in a single train, redundant, independent emergency service water pumping loops are provided each with its own traveling screen and screen wash pump.

2.6.3 Waste Processing Building Cooling Water System

2.6.3.1 The WPBCW System is nonnuclear safety class and nonseismic Category I. The system is not considered available during accident and emergency conditions and no credit is taken in the plant's safety evaluation.

2.6.3.2 Leakage into or out of the WPBCWS from any component being served is detected by an increase or decrease in surge tank water level. Leakage into the WPBCWS may also e detected by an increase in the system radiation level. A radiation detector is provided in WPB cooling water pump discharge header to close the surge tank vent on high radiation.

3.0 DESIGN MARGIN

3.1 The ESW and NSW system design margins are as follows:

3.1.1 Pumps	Parameter	Calc Value*	Design Value	Margin
a) N.S.W.P. 2 x 100%)	flow (gpm)	49,338	50,000	662
	head (ft)	184**	185	approx. 0
N.S.W.P. Motor	(hp)	2,716	3,000	284

b) Refer to Calcs SW-0078 and SW-0080 for information on currently available ESW System margin.

c) SW Booster Pump (2 x 100%)				
flow (gpm)		3,800	4,250	450
head (ft)	129**	130	approx. 0	
S.W.B.P. Motor(hp)		155	200	45

3.1.2 Valves	System Design Pressure/Temp (psig) °F	Valve Rating	Maximum Allowable Press. @ Design Temp	Margin (psi)
A) ESW	150 @ 140°F	150 lb	261 @ 140°F	111
	150 @ 140°F	600 lb	1500 @ 140°F	1350
	230 @ 140°F	600 lb	1500 @ 140°F	1270
	150 @ 140°F	1500 lb	3750 @ 140°F	600
	225 @ 225°F	1500 lb	3750 @ 225°F	3535

Emergency Service Water, Safety Class 3 valves designed to ASME B&PV Code, Section 3, Class 3.

Valves	System Design Pressure/Temp (psig) °F	Valve Rating	Maximum Allowable Press. @ Design Temp	Margin (psi)
B) NSW	150 @ 140°F	150 lb	270 @ 140°F	120
	150 @ 140°F	600 lb	1432 @ 140°F	1282
	230 @ 140°F	600 lb	1338 @ 140°F	1100
	150 @ 140°F	1500 lb	3573 @ 140°F	3423
	225 @ 225°F	1500 lb	3350 @ 225°F	3125

Normal Service Water valves designed to ANSI B16.5

*Calculated value used for specifying pumps. Maximum required flow is 50,240 gpm which is within pump tolerance based on actual performance tests. Flow margin is zero. TDH margin can also be assumed to be zero. These values are calculated assuming clean piping and associated components.

**Calculated head includes 10 percent margin.

3.0 DESIGN MARGIN (continued)

3.2 The traveling screens and Screen Wash System design margins are as follows:

3.2.1 Flow

	Actual/Required At 80 psig
ESW Screen Wash Pumps	270 gpm/176 gpm
Cooling Tower Makeup Screen Wash Pumps	1080 gpm/664 gpm
Fire Service Screen Wash Pumps	540 gpm/352 gpm

3.2.2 NPSH

	Available	Required
ESW Screen Wash Pumps	80-200 ft.	10 ft
Cooling Tower Makeup Screen Wash Pumps	60-140 ft.	20 ft.
Fire Service Screen Wash Pumps	46 ft. (min.)	10 ft.

3.2.3 Submergence of the fire service screen wash pumps ranges from 3-11.5 ft. Two-foot submergence is required.

3.2.4 Margin on system design pressure is at least 11 percent higher than the maximum operating pressure.

3.3 The Waste Processing Building Cooling Water System design margins are as follows:

a) Flow - 2850 gpm
b) TDH - 3 ft.
c) NPSH - 54 ft.

4.0 DOCUMENT REFERENCE LIST

4.1 Drawings

4.1.1 Flow Diagrams:

Drawing No. 2165-G-047 & 048 - Circulating and Service Water System
045 - Condensate and Air Evacuation System
052 - Sampling System
088 - Miscellaneous Systems
089, 089S01, 089S02 - Sampling System (Non-Nuclear)
105 - Radiation Monitoring and Hydrogen Analyzer Systems
133 - Diesel Generator System
308 - Cooling Tower Blowdown, Makeup and Intake Structure Screen Wash System
430 - Waste Processing Building Drainage System

4.1.1 Flow Diagrams (continued)

436 - Intake Structure Pump Seal Bearing Lubrication and Motor Cooling Water System
497 - HVAC Nonessential Chilled Water
498 - HVAC Essential Service Chilled Water - SA
499 - HVAC Essential Service Chilled Water - SB
517 - HVAC Airflow Diagram
562 - HVAC Airflow Diagram
876 - Cooling Water System for Waste Processing Building

4.1.2 Piping Drawings:

Drawing No. 2165-G-095 -	Service and Cooling Water Piping - Containment Building - Plan
096 -	Service and Cooling Water Piping - Containment Building - Partial Plan and Sections
106S01 & S02 -	Radiation Monitor System Piping - AB & Tank Building - Plans & Details
111S03 through S10 -	Miscellaneous 2" and Under Piping - Turbine Building
123 -	Component Cooling Water Piping Reactor Auxiliary Building Plan
125S01, S02, S03, S05 -	RAB Miscellaneous 2" and Under Nonseismic Piping
197S02 -	Fire Protection Piping System - RAB
201 -	Normal Service Water Intake Structure Piping
202 -	ESW Intake Structure Piping - Pump Seal, Bearing Lube & Cooling Water Systems
204 -	ESW Intake Structure Fan Cooler Piping
205 & 206 -	ESW & Cooling Tower Makeup Intake Structure Piping
209 -	ESW Intake Screening Structure Piping
210S02, 211, 212 - 215, 216, 217, 219, 245, 246	Yard Piping
247 -	Composite Piping RAB Shielded Pipe Tunnel
250 & 251 -	Composite Piping RAB Tank Area Plans/Sections
622 -	Secondary Waste Treatment Area Utility & Service Piping
997 -	Utility & Service Piping, Waste Processing Building Elev. 261'
996 -	Utility & Service Piping, Waste Processing Building Elev. 236'
993 -	Utility & Service Piping, Waste Processing Building Elev. 211' Sheet 3

4.1.2 Piping Drawings: (continued)

992 - Utility & Service Piping, Waste Processing Building Elev. 211' Sheet 2
953 - Waste Processing Bldg., Reverse Osmosis System Plan - Elev. 211'
935 - Waste Processing Building Piping, Waste Gas Compressor & Recombiner Area Elev. 211'

4.1.3 Electrical Drawings:

Power Distribution and Motor Data Sheets:

CAR-2166-B-041 - Sheets 12, 13, 45, 46, 126, 131, 182S01, 226S01 (Service Water System); 12, 176S01, 182S01, 226S01, 253S01, (Screen Wash System); 16, 16A, 209S01, 210S03, 235S01, 236S02, (WPB Cooling Water System); 648, 649, 652, 661, 669, 769.

CAR-2166-B047 Sheets 613, 614 - Lighting Panels

One Lines:

CAR-2166-G-029	Main & 6900 V - Auxiliary One-Line Wiring Diagram - Unit 1
CAR-2166-G-030	480 V Auxiliary One-Line Wiring Diagram - Unit 1
CAR-2166-G-037S01	General Service Auxiliary One line Wiring Diagram Bus 1-4A - Unit 1

4.1.4 Instrument Schematics & Logic Diagrams:

Drawing No. 2166-B-419 - Sheets 19.10, 19.11, 19.12, 19.13, 19.20, 19.30, 19.40, 19.50

Drawing No. 2166-G-425S01, 425S02
2166-B430 - Sheets 13.1, 13.2, 13.3, 20.1 thru 20.11, 21.2 thru 21.7, 21.12, 30.2 thru 30.5, 31.82A, 31.82G, 31.82H, 31.82I.

Control Wiring Diagrams

Drawing No. 2166-B-401 - Sheets 1897, 1899, 1900, 1901, 1904, 2181, 2182, 2183, 2185, 2186, 2188 thru 2192, 2197, 2198, 2199, 2201, 2202, 2207, 2208, 2211, 2212, 2213, 2215 thru 2218, 2220 thru 2224, 2227, 2228, 2229, 2231 thru 2235, 2237, 2241, 2242, 2245 thru 2264, 2267, 2268, 2272, 2273, 2280, 2282, 2284, 2286, 2287, 2290, 2584, 2585, 2598, 2599, 2601, 2605, 2612, 2617, 3361 thruh 3366, 3371 thru 3378.

4.2 Specifications

4.2.1 Equipment Specifications:

CAR-SH-AS-9	Traveling Water Screens
-AS-44	Traveling Water Screens
-CH-23	Normal Service Water System Concrete Pipe
-E-6A	6.9-kV Switchgear & 15-kV Bus Duct (Non-1E)
-E-6B	6.9 kV (Class 1E)
-E-9B	480-V Switchgear (Class 1E)
-E-10A	480-V Motor Control Centers (Non-1E)
-E-10B	480-V Motor Centers (Class 1E)
-E-12	Motor for Station Auxiliary Equipment up to 480 V and 250 Hp
-E-12A	Motors for Station Auxiliary Equipment 300 Hp and above
-E-13A	Motors for Station Auxiliary Equipment Rated 6.6 kV and 4 kV
-E-14A	15-kV Power Cables
-E-14B	Power and Control Cables
CAR-SH-E-22A	Lighting and Misc. Panels
-IN-01	Electronic Instrumentation
-IN-03	Orifices
-IN-04	Thermocouple Assemblies
-IN-05	Auxiliary Control Panel
-IN-07	Local Pressure Gages
-IN-08	Local Dial Thermometers
-IN-09	Temperature Switches
-IN-10	Pressure Switches
-IN-15	Cooling Tower & River Makeup Panel
-IN-16	W.P. Control Panel
-IN-18	Waste Process and Display Panel

4.2.1 Equipment Specifications: (continued)

-IN-23	Isolation Panels
-IN-26	Transfer Panels
-IN-27	Sequencer Panels
-IN-30	W.P. Analog Control System
-IN-33	Level Transmitters
-IN-35	Low Range Switches
-IN-38	Main Control Board
-M-11	Screen Wash Pumps, Safety Class 3 and NNS
-M-12	Misc. Shop Fabricated Tanks
-M-13	Class 3 Centrifugal Pumps
-M-18	Sump Pumps
-M-30	General Power Piping
-M-32A	2 -1/2-Inch and Larger CS&SS Valves
-M-33A	2 1/2-Inch and Larger CS&SS Valves
-M-34Y	2-Inch and Smaller CS&SS Valves
-M-36R	2-Inch and Smaller Carbon Steel, Stainless Steel Valves
CAR-SH-M-36Y	2-Inch and Smaller CS&SS Valves
-M-41	Diaphragm Valves
-M-44	Butterfly Valves
-M-47	Temporary Strainers
-M-59	Self-Cleaning Strainers (Nuclear)
-M-60	Self-Cleaning Strainers
-M-65	Cooling Tower
-M-66	Misc. Control Valves
-M-67H	ESW Pumps
-M-67P	NSW & Cooling Tower M/U Pumps
-M-70	Water Check Valves
-M-71	WPB Cooling Water Heat Exchangers
-M-72	WPB Cooling Water Pumps Non-nuclear Safety
-M-78	ESW Intake Structure Butterfly Valves

4.2.1 Equipment Specifications: (continued)

-M-79A	2 1/2-inch and Smaller Carbon Steel Valves (NNS)
-M-79V	2 1/2 and Larger Carbon Steel
-N-18	Secondary Waste Evaporators
-N-24	Volume Reduction System Reverse Osmosis Concentrates
-N-28	Reverse Osmosis System
-N-31	Evaporators
CPL-HNP1-M-029	Emergency Service Water Butterfly Valves

4.2.2 Design Specifications:

CAR-1364-481	SO1	Balance of Plant
CAR-1364-481	SO2	Containment
CAR-1364-481	SO3	Reactor Auxiliary Bldg.
CAR-1364-481	SO4	Fuel Handling Bldg. and Unloading Areas
CAR-1364-481	SO5	Waste Processing Bldg.
CAR-1364-481	SO6	Reactor Bldg. Internal Structures
CAR-1364-481	SO9	West Auxiliary Dam and Spillway
CAR-1364-481	SO11	Channels
CAR-1364-481	SO13	West Auxiliary Separating Dike
CAR-1364-481	SO19	Diesel Generator Building
CAR-1364-481	SO21	Tank Building
CAR-1364-481	SO22	Diesel Fuel Oil Storage/Tank Building
CAR-1364-481	SO23	Emergency Service & Water System Structures
CAR-6418-AS-02		Reactor Auxiliary Bldg. Steel Structures
CAR-6418-AS-04		Containment Bldg. Steel Structures
CAR-6418-AS-05		Fuel Handling Bldg. Steel Structures
CAR-6418-AS-06		Hydraulic Structures (Steel)
CAR-6418-AS-07		Waste Processing Bldg. Steel Structures

4.3 FSAR Sections

2.4.11.7	Heat Sink Dependability Requirements
6.2	Containment Cooling
9.2.1	Service Water System
9.2.10	Waste Processing Building Cooling Water System
9.5.1	Fire Protection System
11.2	Liquid Waste Processing System
11.3	Gaseous Waste Management System

4.4 Project Lists

CAR-1364-B-069	Valve and Specialty List
CAR-1364-B-070	Pipe Line Lists
CAR-2166-B-432	Instrument List (BOP)
CAR-2166-B-434	Instrument List (WPB)
CAR-2166-B-043	SO1 Cable Conduit List
CAR-2166-B-508	Setpoint Document

4.5.1.1 Service Water

A)

SW-2	Normal Service Water Pumps Discharge Strainer Calcs
SW-3	Cooling Tower Makeup Water Pump
SW-4	Cooling Tower Makeup Water System
SW-6	SWS, Cont. Fan Cooler Discharge Orifice. Sizing
SW-7-2	TDH Required for Emergency Service Water Pumps
SW-18	SW System - Answer to AEC Question on Amount of Leakage
SW-34	NSW Two-Pump Operation
SW-37	SW Booster Pump Sys Design Pressure
SW-38	ESW Pressure at Containment Fan Coolers
SW-39	ESW Pump Actuation Time Sequence
SW-40	ESW Supply Press. to Chilled Water
SW-41	NSW Pump TDH Calc
SW-42	NSW Reg's
SW-43	Service Water System Heat Load Calculation
SW-46	ESW/CCW HX & RAB HVAC Chiller Orifice Sizing
SW-47	Cooling Tower Makeup and Blowdown Crosstie
SW-48	CCW Heat Exchanger Performance With Reduced SW Flow
SW-49	EDG JW Performance With Reduced SW Flow
SW-51	HNP ESW System Hydraulic Model Validation
SW-75	CSIP Coolers Flowrate
SW-76	ESW Flows Following 1SW-270 Failure
SW-77	Analysis for the SW Temperature to the CSIPs Following Failure of 1SW-270 to Open
SW-78	Minimum ESW Flow rates
SW-79	NPSHA to ESW Booster Pumps
SW-80	ESWS Flow Requirements Based on Reservoir Level
SW-81	Historical Meteorological Data - Basis for UHS Evaluation
SW-82	Submergence Available to ESW Pump
SW-83	CCW and RHR Hx Overall Heat Transfer Coefficients
SW-84	LOCTIC Input Parameters
SW-85	UHS Analysis
SW-86	SW Pressure at CFCs
EQS-20	ESW System - Instrument Setpoints
PIPE-100	Minimum Wall Thickness for Service Water

B) Equipment Qualification Reference List

SW Booster Pump	ME-529	PO NY-435042
Motor	NQ-8902322	PO NY-435042
ESW Pump	ME-780	PO NY-435182
Motor	ME-779 & 492HA108-1	PO NY-435182
Cyclone Separator	01-900-823	PO NY-435182
Self-Cleaning Strainer	30-HDWS-80	PO NY-435037
Motor	B0003 & 13422	PO NY-435037

4.5.1.1 Service Water (continued)

Press Switch ESW Intake Structure	R3-580-6	PO NY-435037
Butterfly Valve	VER-0230	PO NY-435258
Motor	B0058	PO NY-435258

4.5.1.2 Traveling Screens and Screen Wash

SC-1	Screen Wash Pumps
SC-2	Screen Wash Pumps Max Operating - Pressure
SC-3	Screen Wash System Line Sizing - Reservoir Makeup
SC-4	Check of Screen Wash Pumps Sizing
SC-5	Screen Wash Pumps & Envirex Screens
SC-6	Auxiliary Reservoir Screen Wash Spray Heater Drill Hole
SC-7	ESW Screen Wash Pump 1A-SA NPSH & TDH Calculation

4.5.1.3 Waste Processing Building Cooling Water

WC-1	WPB CW Pump Head Flow & NPSH
WC-2	Sizing of WPB CW Surge Tank Relief Valve & Level Control Valve

4.5.1.4 Electrical Calculations

DAC-1	Load Study
E1-001.2	Service Water Booster Pump Motors
E2-001.3	Emergency Service Water Pump Motors
E2-001.9	Normal Service Water Pump Motors
E2.001.13	Cooing Tower Makeup Pump Motors
E2.001.15	WPB Cooling Tower Makeup Pump Motors

E1-006 480-V Feeder Ground Overcurrent Alarm
E2-006 Ground Overcurrent Relays, 6.9-kV Feeders

CPL-2166-S-301 - Low Voltage Relay Settings
CPL-2166-S-302 - Medium Voltage Relay Settings

4.5.2 EMDRAC List

Equipment/Vendor	Purchase Order
SW Booster Pumps	NY-435042
ESW Pumps	NY-435182 & ProjA0005647
NSW Pumps	NY-435183
ESW Self-Cleaning Strainers	NY-435037
NSW Self-Cleaning Strainers	NY-435124
NSW Pump Motor	NY-435031
Envirex	NY-435222
Envirex	NY-435223
Crane Deming	NY-435178
Sump Pumps	NY-435090
WPB Cooling Water Heat Exchangers	NY-435187
WPB Cooling Water Pumps	NY-435184
Diaphragm Valves	NY-435157
Misc. Safety & Relief Valves	NY-435089
Cooling Tower	NY-435071

4.5.3 DBD-200 - Electrical Cable, Cable Trays and Conduit, Cable Routing, Class I Underground Electrical, Conduit and Class I Electrical, Manholes.

4.5.4 DBD-202 - Plant Electrical System, Off Site Power System, Generator, Exciter and Isophase Bus Duct, Generator and Exciter Mechanical Support Systems.

4.5.5 Regulatory Guides

10 CFR 50 Appendix A
GDC-2, 5, 44, 45, and 46

4.5.6 Engineering Documents

1364-97477	ESWS Single Failure Analysis
ESR 94-00478	Response to 1994 SWOPI Question 3 [NPSHA to ESW pump and booster pumps]
ESR 95-00344	Nonconservatisms in Design Inputs to Cont Accident Anal
ESR 95-00376	Chiller Operability With Reduced SW Flow to the Condenser
ESR 95-00548	Operability Evaluation for EDG JW Cooler Based on Calc SW-0080
ESR 95-00726	Eval. of EDG JW Cooler performance with reduced SW flow
ESR 95-00731	Determine Maximum Outdoor Temperature [SW flow requirements to AH-86]
ESR 95-01025	ESW Butterfly Valve Upgrade
ESR 96-00025	ESW Pump Replacement
ESR 96-00525	AH-2 Low Service Water Flow Operability Evaluation
ESR 97-00008	Evaluate Water Hammer on the SW System
ESR 97-00125	GL-96-06 2-Phase Flow Evaluation

5.0 APPENDIX

5.1 Design Input Document

Not Applicable

5.2 BETZ Laboratories letter to CP&L dated 12/12/86

ATTACHMENT 2
Sheet 1 of 1
Record of Lead Review

Design UBD-128 **Revision** 007

The signature below of the Lead Reviewer records that:
- the review indicated below has been performed by the Lead Reviewer;
- appropriate reviews were performed and errors/deficiencies (for all reviews performed) have been resolved and these records are included in the design package;
- the review was performed in accordance with EGR-NGGC-0003.

☑ **Design Verification Review** ☐ **Engineering Review** ☐ **Owner Review**
- ☑ Design Review
- ☐ Alternate Calculation
- ☐ Qualification Testing

☐ **Special Engineering Review** _____

☐ YES ☑ N/A **Other Records are attached.**

GEORGE WHITE [signature] — MECHANICAL — FEB. 4, 1998
Lead Reviewer (print/sign) — **Discipline** — **Date**

Item No.	Deficiency	Resolution/Date
	NONE NOTED. [signature] 2/4/98	

FORM EGR-NGGC-0003-2-0

CAROLINA POWER & LIGHT COMPANY

SHEARON HARRIS NUCLEAR POWER PLANT

DESIGN BASIS DOCUMENT

COMPONENT COOLING WATER SYSTEM

DBD-131

RECEIVED
AUG 24 1998
HNP
DOCUMENT CONTROL

REVISION	DATE	PREPARED BY	INDEPENDENT REVIEW BY	APPROVED BY
3	7/23/93	Ed Williams	Debbie Doyle	W. A. Slover
4	4/24/96	Tom Scattergood	Mark Pope	Cheryl Brown
5	10/23/96	Mark Pope	Tom Scattergood	Cheryl Brown
6	6/19/97	Raymond Lebitz	Leslie Oakley	E.M. Northeim
7	8/04/98	Raymond Lebitz	Dave Henley	[illegible]
Reason for Change	Changed description of ESW Pump start in paragraph 2.1.9 to reflect plant design. Added paragraph 2.1.21.4 to clarify description of system alignment during recirculation phase of operation.			

SIGNATURES ON ORIGINAL

A/2

Table of Contents

Section		Page
1.0	FUNCTION	3
2.0	DESIGN BASES AND ASSUMPTIONS	
2.1	General System Requirements	3
2.2	Instrumentation and Control	7
2.3	Electrical	10
2.4	Structural	12
2.5	Materials and Chemistry	12
2.6	Failure	12
3.0	DESIGN MARGIN	13
4.0	DOCUMENT REFERENCE LIST	13
4.1	Drawings	13
4.2	Specifications	15
4.3	Final Safety Analysis Report (FSAR)	16
4.4	Project Lists	16
4.5	Miscellaneous	17
5.0	APPENDIX	19

Note:

There are certain criteria which have been added to this DBD that were not originated, reviewed or verified by Ebasco. These criteria were provided by CP&L via comments to the DBD. Ebasco has agreed to incorporate these criteria; however, CP&L has responsibility for the origination, review and verification of these criteria. Criteria provided by CP&L has been identified by an asterisk (*).

1.0 FUNCTION

The Component Cooling Water System is an intermediate cooling loop which removes heat from safety related and non-safety related components during all plant operating conditions. The CCW System is utilized to prevent the direct leakage of radioactivity from nuclear support systems in the plant to the environment, and to prevent the ingress of chlorides and other corrosives into components to which these chemicals could be harmful. The CCW System is used as part of the Emergency Core Cooling System to remove heat from water being recirculated from the Containment Building sump to the reactor, and provide cooling water to safeguards pumps as part of the ESF supporting system.

2.0 DESIGN BASES AND ASSUMPTIONS

2.1 General System Requirements

2.1.1 The CCW System provides cooling for redundant essential loops and a nonessential loop.

2.1.1.1 Each of the two essential loops consist of the following:

a. One RHR heat exchanger

b. One RHR pump oil cooler

2.1.1.2 The nonessential loop consists of the following:

a. One letdown heat exchanger (CVCS)

b. One seal water heat exchanger (CVCS)

c. Two spent fuel pool heat exchangers (SFPCCS)

d. One boron recycle evaporator package consisting of one distillate cooler, one evaporator condenser, and one vent condenser (BRS)

e. Three reactor coolant pump packages, each consisting of one upper bearing lube oil cooler, one lower bearing oil cooler, and one thermal barrier cooler (RCS)

f. One gross failed fuel detector cooler (GFFDS)

g. One excess letdown heat exchanger (CVCS)

h. One reactor coolant drain tank heat exchanger (WPS)

i. Six sample coolers (PSS)

2.1 General System Requirements (continued)

2.1.2 The system is designed to operate during all phases of plant operation and shutdown.

2.1.3 Three CCW Pumps are provided to allow for maintenance on one pump. Each pump provides 100 percent of the flow required by the accident analyses. One pump is usually running during normal operation, two pumps during reactor cooldown, and one or two pumps are required during shutdown, depending on the reactor heat decay and auxiliary heat loads.

2.1.4 The design of the CCW System is based on a maximum service water supply temperature of 95°F. This temperature places no limitations on normal plant operation and affects only the time required for plant cooldown.

2.1.5 The CCW System is capable of cooling the Reactor Coolant System from 350°F to 140°F within 17 hours with both trains operating (see Reference 4.5.11).

2.1.6 The system is designed to supply cooling water at a maximum temperature of 120°F (for approximately 4 hours) to the components being cooled when the Residual Heat Removal System is first placed in operation during plant shutdown. This is the maximum permissible temperature of the cooling water supply to the reactor coolant pumps. During normal plant operation, the system is required to supply cooling water at 105°F (max), at a given flow rate to each component that will remove the rated heat load. The flow rates are adjusted manually during system balancing, or are automatically regulated by temperature control valves.

2.1.7 The size of the CCW System components is based on removing the decay and sensible heat from the reactor, plus miscellaneous auxiliary loads, using the temperatures that would exist 20 hours following reactor shutdown. Shutdown from an extended period of operation is assumed to determine the design decay heat. Operation of both CCW trains is assumed during normal shutdown, and each train is designed to remove one half the design heat load.

2.1.8 The heat load on the CCW System from auxiliary system components independent of the RCS is 20 x 10^6 Btu/Hr.

2.1.9 The Service Water System is required to provide the design flow of approximately 8250 gpm through each operating CCW Heat Exchanger. If one CCW Heat Exchanger is not in use, the Service Water flow through it may be isolated. However, except during maintenance outages which are governed by Plant Limiting Conditions for Operation, the Service Water Pump must be available to start automatically in response to activation of a safety injection 'S' signal.

2.1 General System Requirements (continued)

2.1.10 Instrument Air is provided to control valves that limit flow of CCW through the Letdown and Excess Letdown Heat Exchangers, the Gross Failed Fuel Detector System, the Boron Recycle System (BRS) evaporator condenser, the make-up water control valve from the Demineralized Water System, and the sample panel isolation valves.

2.1.11 The Demineralized Water System is required to provide initial fill and make-up water to the CCW System.

2.1.12 The Reactor Make-up Water System provides emergency make-up water to the CCW System through a normally closed manual valve.

2.1.13 The design objective of the surge tank overflow is to ensure the maximum CCW pump discharge pressure does not exceed 110% of the design pressure assuming a water solid surge tank coincident with the maximum anticipated inleakage through a ruptured tube in one of the CCW system heat exchangers. The CCW Surge Tank overflow is designed not to release any potentially contaminated gases within the Control Room habitability area. The overflow line is sized to minimize the back pressure on the tank.

2.1.14 Inservice testing of the CCW pumps is required in accordance with ASME Section XI to confirm that each pump is capable of operation at its design head and flow.

2.1.15 Containment isolation valves may be subject to leak rate verification for Integrated Leak Rate and/or Local Leak Rate Testing programs.

2.1.16 The Surge Tank is provided with a baffle, or divider, that provides separation between the redundant CCW trains during the recirculation phase of a LOCA, when the cross connect valves between the two trains are closed.

2.1.17 Relief Valve Sizing

2.1.17.1 Thermal expansion over pressure protection is provided on all components that may be isolated. This is accomplished two ways: Thermal relief valves are used on some components on the downstream side of the heat exchanger and can relieve to drains or back to the system. A bypass arrangement consisting of a restrictor orifice, locked open valve and check valve is installed across the downstream (outlet) isolation valve on other components in the system. The bypass flow is intended to provide thermal over pressure protection and prevent the fluid in the heat exchanger from stagnating if that exchanger is isolated.

2.1 General System Requirements (continued)

2.1.17.2 The relief valve downstream of the Excess Letdown Heat Exchanger is sized to pass the liquid/steam mixture flow that would result from a tube rupture.

2.1.18 A separate motor operated valve is provided on the return line from the Reactor Coolant Pump thermal barriers. This valve closes if high flow rates are detected. A separate valve is used to satisfy Standard Review Plan guidelines on use of containment isolation valves for additional process control. Piping isolated by this valve is designed for full RCS pressure.

2.1.19 No insulation is required for the CCW piping.

2.1.20 Equipment Qualification

2.1.20.1 All piping and components constructed to the requirements of ASME B&PV Code Section III are qualified for operation after a Design Basis Earthquake.

2.1.20.2 All components are qualified for operation in the temperature, pressure, humidity and radiation environment in which they are located (see References 4.3 and 4.5.9).

2.1.20.3 All piping has been reviewed for stresses due to thermal expansion and contraction, and for compliance with maximum allowable nozzle loads specified for plant components.

2.1.21 Operational Requirements

2.1.21.1 During a plant shutdown (refueling) one or both CCW trains may be in operation, depending on Service Water supply temperature, amount of heat decay being generated and the number of auxiliary systems in service.

2.1.21.2 During normal operation, only one CCW train is normally required, since only minimal letdown cooling and plant auxiliary loads are in service. The second CCW Pump and Heat Exchanger are available and will automatically start on low CCW supply pressure.

2.1.21.3 During normal operation at least one CCW pump is supplying cooling water to safeguard pumps. The activation of a safety injection 'S' signal will automatically start a second pump thereby ensuring the continued operation of at least one CCW pump operating during the injection phase of safety injection. Before the initiation of the SIS recirculation phase, the second CCW pump is started and the four motor operated valves that cross-connect the two trains are closed by operator action from the control room.

2.1 General System Requirements (continued)

2.1.21.4 All four motor operated valves are initially closed to establish the design ccw flowrate to the RHR heat exchangers. During the recirculation phase, two of the four motor operated valves must remain closed in order to ensure train separation. One pair of valves can be opened to re-establish ccw flow to the non-essential loop in order to provide cooling to the spent fuel pools.

2.1.22 The primary regulatory requirements applicable to the CCW System are 10CFR 50 Appendix A, Criteria 34, 35, 36, 37, 44, 45, 46, 54 and 57.

2.2 Instrumentation and Control

2.2.1 Instrumentation and Control devices have been provided to ascertain that functions defined in Section 1.0 of this DBD are adequately performed.

2.2.2 Although either of the CCW trains provides sufficient cooling for mitigation of any accident, the operation of the second train and closure of the cross-connecting valves is required to satisfy the single failure criteria for components in the CCW system.

2.2.3 Automatic CCW System controls are provided for the following functions:

2.2.3.1 Low CCW Pump discharge pressure starts the standby CCW pump and the associated Service Water Pump.

2.2.3.2 High CCW return flow from the Reactor Coolant Pump Thermal Barrier Cooling Coils closes an isolation valve on the CCW return line.

2.2.3.3 Low Surge Tank level isolates the Gross Failed Fuel Detector.

2.2.3.4 CCW flow through the Letdown Heat Exchanger is automatically regulated to maintain a preset letdown water temperature.

2.2.3.5 Gamma-radiation detectors on the discharge of the CCW Pumps alarm on high system radiation.

2.2.4 The following indication is available in the Main Control Room:

a - CCW Heat Exchanger outlet temperature
b - CCW Heat Exchanger outlet pressure
c - CCW Heat Exchanger outlet flow
d - CCW flow to the RHR Heat Exchanger
e - CCW Surge Tank level (1 on each side)
f - CCW Containment Isolation Valve Position

2.2 Instrumentation and Control (continued)

2.2.5 The following alarms are annunciated in the Main Control Room:

a - High temperatures in the CCW Pump suction

b - High (gamma) radiation in the CCW Pump discharge

c - High/Low levels in the CCW Surge Tank (both sides)

d - High temperatures in the CCW Heat Exchanger outlet

e - Low pressure in the CCW Heat Exchanger outlet

f - High flow in the CCW Heat Exchanger outlet

g - High temperatures in the Reactor Coolant Pump outlet headers

h - High/Low flow in the Reactor Coolant Pump bearing cooler outlet headers

i - Low flow in the Reactor Coolant Pump thermal barrier CCW outlet

j - High/Low flow in the Reactor Drain Tank Heat Exchanger CCW outlet

k - High/Low flow in the Letdown Heat Exchanger CCW outlet

l - High/Low flow in the Excess Letdown Heat Exchanger CCW outlet

m - High/Low flow in the Spent Fuel Pit Heat Exchanger CCW outlet

n - High/Low flow in the Seal Water Return Heat Exchanger CCW outlet

o - High differential flow (i.e. flow mismatch) between the CCW flow to and from the Recycle Evaporator package

p - Low flow from the RHR Pump cooler CCW outlet

q - High/Low flow from the RHR Heat Exchanger CCW outlet

2.2 Instrumentation and Control (continued)

2.2.6 Local indication is provided for:

a - CCW Surge Tank level (each side)

b - CCW Pumps suction and discharge pressure

c - CCW Heat Exchanger CCW inlet temperature

d - CCW Heat Exchanger CCW outlet flow

e - Reactor Coolant Pump CCW outlet headers temperature (2)

f - Reactor Coolant Pumps lower bearing cooler CCW outlet flow (3)

g - Reactor Coolant Pump upper and lower bearing cooler CCW outlet total flow (3)

h - Reactor Coolant Pumps thermal barrier cooler CCW outlet flow (3)

i - Reactor Coolant Pumps thermal barrier cooler CCW outlet header flow (1)

j - Reactor Coolant Drain Tank Heat Exchanger CCW outlet temperature

k - Reactor Coolant Drain Tank Heat Exchanger CCW outlet flow

l - Letdown Heat Exchanger CCW outlet temperature

m - Letdown Heat Exchanger CCW outlet flow

n - Excess Letdown Heat Exchanger CCW outlet temperature

o - Excess Letdown Heat Exchanger CCW outlet flow

p - Seal Water Heat Exchanger CCW outlet temperature

q - Seal Water Heat Exchanger CCW outlet flow

r - Spent Fuel Pit Heat Exchanger CCW outlet temperature

s - Spent Fuel Pit Heat Exchanger CCW outlet flow

t - RHR Heat Exchanger CCW outlet temperature

u - RHR Heat Exchanger CCW outlet flow

v - RHR Pump Oil Cooler CCW outlet flow

w - Boron Recycle Evaporator Package CCW return temperature

x - Boron Recycle Evaporator Vent Condenser CCW outlet flow

y - Gross Failed Fuel Detector CCW outlet flow

2.2 Instrumentation and Control (continued)

2.2.7 The containment isolation valves for the Excess Letdown Heat Exchanger and Reactor Coolant Drain Tank Heat Exchanger CCW headers close on a phase A isolation (i.e., a "T" signal). The containment isolation valves for the Reactor Coolant Pump CCW headers close on a phase B isolation (i.e., a "P" signal).

2.2.8 The CCW Surge Tank is located at the highest elevation of the CCW System to facilitate initial filling and prevent vapor binding of CCW piping segments.

2.2.9 The motor operated valve provided on the return line from the Reactor Coolant Pump thermal barriers will close on high flow rate.

2.2.10 Operating status of the equipment listed below are inputted to the plant computer for historical data and trend analysis.

a - Component Cooling Pumps

b - Isolation Valves

c - Cooling Water Outlet Valve

2.3 Electrical

2.3.1 Electrical power for the (3) 800 Hp CCW Pumps, motor operated valves and all essential controls are powered by ESF redundant off-site power supplies, standby on-site diesel generator power supplies and DC power supplies.

2.3.2 To assure reliability, the component cooling pumps and motor operated valves are connected to separate redundant electrical power supplies and separate redundant control circuits. Each train of CCW equipment performing similar functions are electrically independent.

2.3.3 An on-site emergency power source is required to supply essential electrical equipment if a total loss of normal power should occur.

2.3.4 Electric power for the motor operated valves is provided by the ESF 480V emergency MCC's 1A21-SA, 1A31-SA, 1B31-SB, 1A35-SA, and 1B35-SB. These loads are considered continuous. The component cooling water system is part of the Emergency Core Cooling System which is required for safe shutdown of the plant.

2.3.5 Portions of the system not essential for operation of the system, such as the transfer pump, drain tank pump and some instrumentation, are powered from non-ESF power supplies. These nonessential loads are considered intermittent.

2.3 Electrical (continued)

2.3.6 DC power is supplied by safety related panels DP-1A-SA and DP-1B-SB. DC power is also supplied by non-safety related panel DC-1A.

2.3.7 Penetration heat loss calculation 22 shows that various conductor sizes within a single penetration are below the maximum allowable heat dissipation. This limits the nozzle concrete interface temperature to 120°F in accordance with IEEE standard 317-1983, drawings CAR 1364-4289, 4290 and 4291 and Electrical Penetration Schedule sheets S1223, S1227, S1230 and S1249.

2.3.8 Electrical penetration protection calculation 30 shows that without loss of mechanical integrity, the penetrations withstand the maximum short circuit current due to a fault. This is for a period of time sufficiently long enough to allow backup circuit protection to operate on failure of the primary protection device. Therefore primary and secondary (backup) fuses and/or breakers provide protection, interrupting a fault before the thermal capabilities of the penetration are exceeded.

2.3.9 Since two pumps may be required for reactor shutdown, three CCW pumps are provided to allow for maintenance on one pump. Pump 1A-SA is connected to 6.9 kV ESF Bus 1A-SA, Pump 1B-SB is connected to ESF Bus 1B-SB and Pump 1C-SAB is connectible to either Train "A" or Train "B".

2.3.10 In order for Pump 1C-SAB to replace either pump 1A-SA or 1B-SB and to maintain redundancy in electrical power supply and control, Pump 1C-SAB has a dual cubicle/single breaker arrangement. It can be powered and started from the same electrical division as the pump it replaces. Furthermore, provisions are made so that it cannot be connected to both redundant circuits at the same time, which would violate separation and single failure criteria. A mechanical interlock prevents placing the breaker for pump 1C-SAB in the connected position at the same time as either pump 1A-SA or 1B-SB. This assures that both are not started by an automatic starting signal which could overload the emergency power supply. An annunciator will alarm in the control room if this interlock is defeated and both the normal and Pump 1C-SAB breakers are racked in the same train. Before Pump 1C-SAB is started, the breaker designated for the dual cubicle arrangement must be moved to the corresponding cubicle in the emergency bus where the disabled pump is connected (see References 4.1.9 and the electrical calculations in Section 4.5.1).

2.3.11 Electrical power and control cables for the system are sized in accordance with SHNPP Unit 1 calculations and electrical design criteria 8, 9, 17, 18, 19, 20 and 21 (see Reference 4.5.10).

2.3 Electrical (continued)

2.3.12 Cable and raceway for the system is in accordance with SHNPP Unit 1 Electrical Design Criteria 3 and 4 (see Reference 4.5.10).

2.4 Structural

Not applicable to this DBD

2.5 Materials and Chemistry

2.5.1 All components for the CCW System are fabricated of carbon steel. Heat exchanger tube materials are stainless steel or 90-10 copper-nickel alloy, as dictated by the fluid on the tube side of the exchanger.

2.5.2 The CCW System is treated with a molybdate/nitrate/tolyltriazole (MNT) inhibitor for corrosion control.

2.5.3 Local sample points are provided downstream of the CCW Pumps and at the surge tank.

2.5.4 Water chemistry requirements are specified in the Westinghouse "Chemistry Criteria and Specifications for Westinghouse PWRs".

2.5.5 A Chemical Addition Tank is provided to allow pH and chromate adjustment. Chemicals added to the tank are swept into the surge tank standpipe by a line from the CCW Pump discharge.

2.5.6 Phosphoric acid and Sodium Hydroxide are used for pH adjustment.

2.5.7 Due to the chemical treatment of the CCW System, a CCW Drain Tank and CCW Hold-up Tank are provided to help limit the amount of water drained to the building sumps. If the CCW System becomes contaminated, these tanks also help retain the radiation within the plant. Transfer pumps are provided for each of these tanks.

2.6 Failure

2.6.1 The effect of a single active failure within the CCW System has been considered. The result of the analysis are tabulated on FSAR Table 9.2.2-4. In addition, the worst case leak scenario postulated is a leak in one train of the CCS that results in a loss of all component cooling water. For this scenario, no other single failures need to be postulated. This is acceptable since the CCWS is not essential in the short term following this event to establish safe reactor shutdown. In the longer term, system redundancy and isolation provisions will permit the operator to reestablish its operation so that long-term cold shutdown can be achieved. Therefore, SHNPP CCWS is designed to meet passive failure criteria and the Standard Review Plan Section 3.6.1 and 3.6.2 are applicable to its design and layout.

2.6 Failure (continued)

2.6.2 Failure of one CCW Heat Exchanger and/or one CCW train has no safety implications during reactor cooldown. The cooldown period will be extended due to the reduced capacity.

2.6.3 Failure of one CCW Heat Exchanger and/or one CCW train after shutdown has no safety implications. The RCS and operating CCW loop temperature will rise to a higher plateau, where the greater temperature differentials will compensate for the loss of the second train.

2.6.4 Failure of one CCW Heat Exchanger and/or one CCW train during normal operation reduces system redundancy and would require the shutdown of the reactor in accordance with Plant Limiting Conditions for Operation. However, only one train is required during normal operation, so the second train could be utilized while repairs are performed, and to cooldown the reactor, if required.

2.6.5 Failure of one CCW Heat Exchanger and/or one CCW train during the recirculation phase following a LOCA reduces system redundancy, however, the remaining CCW train provides 100% of the required capacity.

2.6.6 In the event of a failure of normal AC power, all ESF loads will be fed from both emergency diesel generators and Non-ESF loads can be aligned with emergency diesel generator 1A-SA or 1B-SB. During normal plant operation, operator discretion shall be utilized such that an overload condition will not occur.

2.6.7 Additional single failure effects analysis is provided in 1364-97525 (ESR 94-00057).

3.0 DESIGN MARGIN

Not applicable to systems within the Westinghouse NSSS scope of supply.

4.0 DOCUMENT REFERENCE LIST

4.1 Drawings

4.1.1 Flow Diagrams

CAR-2165-G-184	RAB Drainage Systems
CAR-2165-G-187	FHB Drainage Systems
CAR-2165-G-819	Component Cooling Water, Sheet 1
CAR-2165-G-820	Component Cooling Water, Sheet 2
CAR-2165-G-821	Component Cooling Water, Sheet 3
CAR-2165-G-822	Component Cooling Water, Sheet 4
CAR-2165-G-822S01	Component Cooling Water, Sheet 5

4.1.2 General Arrangements

CAR-2165-G-011	Containment Building Plan at El. 221' and 236'
CAR-2165-G-012	Containment Building Plan at El. 261' and 286'
CAR-2165-G-013	Containment Building Sections
CAR-2165-G-014	Containment Building Sections

4.1 Drawings (continued)

CAR-2165-G-015	RAB Plan at El. 190' and 216'
CAR-2165-G-016	RAB Plan at El. 236'
CAR-2165-G-017	RAB Plan at El. 261'
CAR-2165-G-018	RAB Plan at El. 286'
CAR-2165-G-019	RAB Plan at El. 305'
CAR-2165-G-020	RAB Sections Sheet 1
CAR-2165-G-021	RAB Sections Sheet 2

4.1.3 Piping Drawings

CAR-2165-G-120	Containment Building - Plan
CAR-2165-G-121	Containment Building - Partial Plans
CAR-2165-G-122	Containment Building - Sections & Details
CAR-2165-G-123	RAB Plan
CAR-2165-G-124	RAB Plan & Sections
CAR-2165-G-126	RAB Plan & Sections
CAR-2165-G-127	RAB Plan El. 236'
CAR-2165-G-255	FHB Plan El. 236' Sheet 2
CAR-2165-G-257	FHB Sections - Sheet 1
CAR-2165-G-260	FHB Sections - Sheet 4
CAR-2165-G-264	FHB Misc Plans & Sections

4.1.4 Power Distribution and Motor Data Sheets

CAR-2166-B-041	Sheets 45, 46, 172S03, 173S02, 175S01, 179S02, 181S02, 181S03, 194S03, 674, 678, 682.

4.1.5 One Lines

CAR-2165-G-030	480V Auxiliary One Line Wiring Diagram - Unit 1
CAR-2166-G-029	Main and 6900V One Line Diagram

4.1.6 Instrumentation Logic Diagrams

CAR-2166-B-430	Sheet 30.3

4.1.7 Control Wiring Diagrams

CAR-2166-B-401	Sheets 168, 292, 420, 421, 940 thru 944, 946 thru 963, 965 thru 975, 1471 and 1472.

4.1.8 Electrical Design Criteria

Criteria #	Title
3	Cable Tray Design and Installation
4	Conduit Design and Installation
8	Power Cable Ampacities
9	480V ACB, Starter and Cable Size for Major Load
17	480V Auxiliary System
18	Cable Data and Loop Length

4.1 Drawings (continued)

19	Special Cable Specification CAR-SH-E-15
20	Safety Related Bus Voltage Adequacy
21	208/120V Auxiliary System (1E)

4.1.9 Medium Voltage Relay Settings

CAR-2166-S-302	Sheets 19, 23 and 24

4.2 Specifications

CAR-SH-A-02	Nuclear Steam Supply System
CAR-SH-M-34R, 34Y	2" and Smaller, Carbon and Stainless Steel Valves
CAR-SH-M-36R, 36Y	2" and Smaller, Carbon and Stainless Steel Valves
CAR-SH-M-40	Miscellaneous Safety and Relief Valves
CAR-SH-M-41	Diaphragm Valves
CAR-SH-M-47	Temporary Strainers
CAR-SH-M-70	Water Check Valves
CAR-SH-M-73	Solenoid Valves (NS)
CAR-SH-M-12	Miscellaneous Pumps
CAR-SH-AS-12	Miscellaneous Shop-Fabricated Tanks
CAR-SH-E-06B	6.9kV Switchgear (Class 1E)
CAR-SH-E-10A	480V MCC (Non 1E)
CAR-SH-E-10B	480V MCC (Class 1E)
CAR-SH-E-12A	Motors for Station Auxiliary Service Furnished With Driven Equipment Up to 250 Hp
CAR-SH-E-13A	Motor for Station Auxiliary Service 6600 and 4000 V
CAR-SH-E-14A	15kV Power Cable (Non 1E)
CAR-SH-E-14B	Power and Control Cables
CAR-SH-E-14C	300V Instrumentation Cable (Class 1E)
CAR-SH-E-14D	Thermocouple Cable (Class 1E)
CAR-SH-E-15A	Special Cables (Anaconda) - Class 1E
CAR-SH-E-15B	Special Cables (Paige Electric) - Class 1E
CAR-SH-E-28	Containment Electrical Penetrations

4.2 Specifications (continued)

CAR-SH-IN-05	Auxiliary Control Panel
CAR-SH-IN-06	Local Panels and Racks
CAR-SH-IN-09	Temperature Switches
CAR-SH-IN-11	Rotameters and Flowswitches
CAR-SH-IN-12	Level Switches
CAR-SH-IN-13	Auxiliary Relay Panels
CAR-SH-IN-23	Isolation Panels
CAR-SH-IN-26	Transfer Panels
CAR-SH-IN-27	Sequencer Panels
CAR-SH-IN-38	Main Control Board (NS)

4.3 Final Safety Analysis Report (FSAR)

Section 3.11	"Environmental Design of Electrical and Mechanical Equipment"
Section 5.4.7	"Residual Heat Removal System"
Section 7.1.1.3	"ESF Supporting System"
Section 8.3.1.1.2.3	"On Site Power System Loads Supplied from Each Bus"
Section 8.3.1.1.2.4	"On Site Power System Manual and Automatic Interconnections Between Buses, Between Buses and Loads and Between Buses and Supplies"
Section 9.2.2	"Component Cooling Water"
Section 12.3	"Radiation Zone Maps"

4.4 Project Lists

CAR-1364-B-69	Valve List
CAR-1364-B-70	Piping Line List
CAR-3166-B-432	Instrument List
CAR-3166-B-508	Set Point Document
CAR-3166-B-043S01	Cable and Conduit List

4.5 Miscellaneous

4.5.1 Calculation List

Mechanical Calculations

Note: Ebasco Mechanical Calculations CC-1, CC-2, CC-3, CC-4, and CC-5 have been superseded by Westinghouse Proof-of-Design calculations.

CC-6	CCW Surge tank Room Maximum Flood Level
CC-7	CCW Heat Exchanger Torque Values
NSSS-038	RHR Heat Exchanger and Pump Cooler Cooling Water Outlet Temperature
SW-48	CCW Heat Exchanger Performance with Reduced Service Water Flow

Stress Analysis Calculations

Stress Calc No.	Corresponding Piping Iso. No.
SA-1147-1	1A-236-CC-39
SA-1230-1 thru 12	-1 thru -20
SA-1231	-28
SA-1232	-27
SA-1233	-30
SA-1234	-34 & -35
SA-1240	-25 & -26
SA-1241	-37
SA-1242	-22 & -23
SA-1243A thru C	-31 & -32
SA-1244	-36
SA-1245	-41
SA-1246	-38
SA-1247, 1248, & 1249	-40
SA-1250	-41
SA-1251 & 1252	-38
SA-1260	-23
SA-1261	-33
SA-1270	-29
SA-1271	-24

Electrical Calculations

E2-001.1	Overcurrent Protection for 6.9kV Motors: Component Cooling Water Pumps 1A-SA, 1B-SB and 1C-SAB
E2-006	Ground Overcurrent Relays, 6.9kV Feeders

4.5.2

Westinghouse Proof-of-Design calculations have been performed on the piping to each component to assure the proper flow rates are provided.

4.5 Miscellaneous (continued)

4.5.3 Vendor Manuals

a) CCW Pumps, VM-ISP

b) CCW Heat Exchanger, VM-MJB

c) CCW Drain Tank Pump, VM-IQW

d) CCW Hold-Up Tank Pump, VM-IQW

4.5.4 EMDRAC List

Primary system drawings are filed in:

S020507	CCW Pumps
S021000	CCW Heat Exchangers
S021500	CCW Surge Tank
S022000	Valves
S028500	Westinghouse Flow Diagrams
S032000	Process Instrument & Control Systems
S032500	Process Control System
S038600	Electrical Systems
435107	CCW Hold-Up and Drain Tanks
435181	Miscellaneous Centrifugal Pumps

b) EMDRAC Drawings

1364-002368	CCW Pumps
1364-002441	CCW Heat Exchanger
1364-002651	CCW Heat Exchanger Specs.
1364-002652	CCW Heat Exchanger Specs.
1364-002653	CCW Heat Exchanger Specs.
1364-011064	Drain Tank & Hold-Up Tank Pumps
1364-016352	Transfer Pump Performance Test Curve
1364-023814	Drain Tank Pump Performance Curve
1364-92105	CCW Pump Performance Curve
1364-96815	SD-CQL-291, Westinghouse SD

4.5.5 Letter CQL-6075, dated 11/19/80, which provides a list of Proof-of-Design calculations performed by Westinghouse

4.5.6 Westinghouse Reactor Fluid Systems Standard Design Manual

4.5.7 Westinghouse System Description, CQL-291, dated April, 1980 (Rev. 1)

4.5.8 Chemistry Criteria and Specifications for Westinghouse Pressurized Water Reactors

4.5.9 Mechanical Equipment Qualification Program Report

4.5.10 DBD #202 - Plant Electrical System, Off-site Power System, Generator, Exciter and Isophase Bus Duct, Generator and Exciter Mechanical Support Systems

4.5.11 Westinghouse letter FCQL-357, dated August 8, 1985 - FSAR Section 5.4 (RHR System)

4.5 Miscellaneous (continued)

4.5.12 Purchase Order 584756M-AA-Atlas Industrial Manufacturing Company Design Information for Reactor Coolant Drain Tank

4.5.13 Purchase Order 587731M-AA-Atlas Industrial Manufacturing Company Design Information for Excess Letdown Heat Exchangers

4.5.14 Westinghouse Letter CQL-90-563, dated October 2, 1990 - CCW System Post Accident Pressure Evaluation

4.5.15 Atlas Industrial Manufacturing Letter dated March 28, 1991 - Heat Exchanger Design Pressure Change Reactor Coolant Drain Tank

4.5.16 Letter from Ewell Morgan to Bill Slover dated July 20, 1993 - CCW System pH Control Practices, File # H-4080

5.0 APPENDIX

5.1 Design Input Documents

Not Applicable.

CAROLINA POWER & LIGHT COMPANY

SHEARON HARRIS NUCLEAR POWER PLANT

DESIGN BASIS DOCUMENT

FUEL HANDLING BUILDING AND WASTE PROCESSING BUILDING HVAC SYSTEM

DBD-135

NOTE: Effective as of 04/13/95, full responsibility for the maintenance of this document and for subsequent modifications made or required to be made to this document is assumed by Carolina Power & Light Company ("CP&L"). Ebasco Services Incorporated has no responsibility for maintenance and modifications after said date.

REVISION	DATE	PREPARED BY	INDEPENDENT REVIEW BY	APPROVED BY
0	04/08/87	J. K. Bacalakis	W. Bielawski	M. Barkat
1	06/19/90	D. K. Clark	L. G. Lee	M. Barkat
2	03/08/93	D. K. Clark	L. G. Lee	M. Barkat
3	04/13/95	E. M. McLean	M. A. McDaniel	M. Pugh
4	5/03/96	Ken Ramsey	Leslie Oakley	Cheryl Brown
5	12/03/97	M. A. McDaniel	W. E. Rascoe Jr	A. M. Worth
6	10/13/98	W. E. Rascoe, Jr	Don Knepper	Sean O'Connor
7	4/19/99	Leslie Oakley	W. E. Rascoe Jr	Sean O'Connor

RECEIVED
APR 22 1999
HNP
DOCUMENT CONTROL

G/1

TABLE OF CONTENTS

Section		Page
1.0	FUNCTION	3
2.0	DESIGN BASES AND ASSUMPTIONS	3
2.1	Systems Requirements	3
2.1.1	System-Specific Requirements	4
2.1.2	Design Conditions	7
2.1.3	Airflow Requirements	8
2.1.4	Design Loads	11
2.1.5	Environmental Conditions	12
2.1.6	Interface Requirements	13
2.1.7	Operational Requirements	13
2.1.8	Test Requirements	15
2.1.9	Regulatory Requirements	15
2.1.10	Safety and Health Requirements	16
2.1.11	Special Requirements	17
2.2	Instrumentation and Control	17
2.3	Electrical	33
2.4	Structural	42
2.5	Materials and Chemistry	42
2.6	Failure Effects	43
3.0	DESIGN MARGIN	44
4.0	DOCUMENT REFERENCE LIST	47
5.0	APPENDIX	65

1.0 FUNCTION

The Fuel Handling Building and Waste Processing Building HVAC Systems are designed to provide:

1.1 Heating, ventilation, and cooling to maintain the indoor design temperature range of the served areas of the Fuel Handling Building during the normal operation of the plant.

1.2 Isolation of the fuel handling areas in the Fuel Handling Building in the event of a fuel handling accident or upon any accidental release of radioactive material and maintenance of these areas at subatmospheric pressure by the Emergency Exhaust System in order to limit the potential off-site exposures to within acceptable limits of 10CFR100.

1.3 Cooling of the spent fuel pool pump room and other areas housing safety-related systems during normal and emergency conditions.

1.4 Ventilation and heating to the Waste Processing Building Areas, including a filtered exhaust system for the potentially contaminated areas, to reduce the off-site airborne radioactivity in accordance with the Code of Federal Regulations 10CFR, Part 20, GDC 60, during the normal operation of the plant.

1.5 Heating, ventilation, and air conditioning to the Waste Processing Building Control Room to maintain a suitable thermal environment for personnel comfort and for continuous, reliable operation of electrical equipment and controls.

1.6 Heating, ventilation, and air conditioning for the I&C Shop, personnel facilities, office, and laundry areas to provide personnel comfort and to support the continuous function of equipment and controls.

1.7 Heating, ventilation, air conditioning, and fume hood's exhaust for the laboratory areas.

1.8 Detection and control of the spread of smoke in the different areas of the FHB and WPB.

1.9 Plant operating personnel with sufficient data and operating parameters monitoring to enable the operators to evaluate systems' performance, operating difficulties, and malfunctions.

2.0 DESIGN BASES AND ASSUMPTIONS

2.1 Systems Requirements

1. The HVAC Systems serving the Fuel Handling Building include the Operating Floor Normal Supply and Exhaust Systems, Operating Floor Emergency Exhaust System, Below Operating Floor Normal Ventilation Systems, Spent Fuel Pool Pump Room Ventilation System, and FHB Switchgear Room Ventilation System.

2. The HVAC Systems serving the Waste Processing Building include the Waste Processing Areas Ventilation System, WPB Control Room HVAC System, Personnel Handling Facility HVAC System, Office and Laundry Areas HVAC System, Laboratory Areas HVAC System, and the Instrumentation and Controls Shop HVAC System.

2.1.1 System-Specific Requirements

2.1.1.1 The FHB operating floor normal supply and exhaust is designed to remove the thermal loads from the spent fuel pool areas by a combination of Once-Through Ventilation and Chilled Water Cooling System. The chilled water cooling, in addition to providing cooling, also controls the relative humidity in the areas to provide tolerable environmental conditions for operating personnel. The FHB operating floor thermal loads are comprised of the following:

a. Heat dissipated (sensible and latent) from the fuel pool areas and mechanical and electrical equipment and components.

b. Transmitted heat through the building structure due to temperature difference and solar heat.

c. Outside air heat admitted into the building by the Normal Supply System to satisfy ventilation and exhaust requirements.

The air distribution of the Cooling System is selected based on the requirements to direct the supply air from areas of lesser potential radioactivity to areas of progressively higher potential radioactivity to maintain the radiation levels in the spaces ALARA. This precludes any return of ventilation air to the air-handling units and limits any potential contamination in the Normal Ventilation Supply System. The Normal Supply and Exhaust Systems are provided with redundant Safety Class 3, Seismic Category I, isolation dampers to contain the airborne radioactive products in the event of accidental release of radioactive material caused by a fuel handling accident. The system with the exception of the isolation dampers and associated duct is not safety-related since it is not required to operate to support the safe shutdown of the plant or mitigate the consequences of the fuel handling accident.

2.1.1.2 The FHB Operating Floor Emergency Exhaust System maintains the FHB envelope at a negative pressure and filters all the exhaust air through prefilters, HEPA filters, and charcoal adsorbers to reduce the airborne radioactive material to within the acceptable limits of 10CFR100 in the event of an accidental radioactive release of a fuel handling accident. This safety-related system is dedicated to the safety function associated with fuel handling accident in the FHB; it is not required for safe shutdown of the plant. System is Safety Class 3, Seismic Category I, and provided with 100 percent redundancy.

2.1.1 System-Specific Requirements (continued)

2.1.1.3 The below Operating Floor Normal Ventilation Systems which include the North and South Normal Supply and Normal Exhaust Systems remove the thermal loads from the miscellaneous spaces in the Fuel Handling Building below the operating floor by Once-Through Ventilation System using outside air as the cooling media. The supply air is directed from areas of lesser potential radioactivity to areas of progressively higher radioactivity before it enters the exhaust system. Safety Class 3, Seismic Category I, isolation dampers are provided in the return ducts of the loading area to isolate the area from other areas of the Fuel Handling Building in the event of a fuel handling accident. These Normal Nonsafety Ventilation Systems are provided with 100 percent capacity standby fans at the supply and exhaust side to ensure their continuous, reliable operation.

2.1.1.4 The Spent Fuel Pool Pump Room Ventilation System removes the thermal loads from the Spent Fuel Pool Pumps and Heat Exchangers Area, MCC Room, and the H&V Emergency Filtration Area by recirculation of the supply air through the chilled water cooling coil to transfer the thermal loads to the Essential Services Chilled Water System. Two 100 percent capacity redundant Safety Class 3, Seismic Category I, air-handling units provided with emergency power from the diesel generators ensure the safety function of cooling the areas housing safety-related equipment in the event of a single active failure. System cooling capacity is determined based on the maximum anticipated cooling requirements during the normal and the emergency operating conditions.

2.1.1.5 The FHB Switchgear Room Ventilation System removes the thermal loads from the switchgear space by a once-through summer-winter ventilation system which is sized to maintain a design indoor temperature range compatible with the switchgear manufacturer's requirements. The thermal loads imposed on the system are comprised of the following:

- Heat dissipated from the switchgear
- Heat transmitted through the building structure due to temperature difference and solar heat
- Heat released from lighting

The winter minimum room design temperature is maintained by the operation of the local electric unit heaters.

2.1.1.6 The Waste Processing Areas Ventilation System removes the thermal loads from the Waste Processing Areas by a once-through ventilation system combined with evaporative cooling. Supplemental cooling is provided by local chilled water fan coolers.

The thermal loads are comprised of the following:

a. Heat dissipated from the Waste Processing Areas mechanical and electrical equipment and components.

b. Transmitted heat throughout the building structure due to temperature difference and solar heat.

2.1.1 System-Specific Requirements (continued)

Waste Processing Areas housing equipment, components, and piping containing radioactivity are provided with specific air distribution so that supply air is directed from areas of lesser potential radioactivity to areas of higher potential radioactivity before it is exhausted through HEPA/Charcoal Adsorber Filtration System. Air from areas with no potential contamination is recirculated through the supply system during cold seasons for energy savings.

2.1.1.7 The WPB Control Room HVAC System removes the thermal loads from the control room, computer room, cable vault, and relay room by transferring the thermal loads to the nonsafety-chilled water system.

The thermal loads are comprised of the following:

a. Heat dissipated into the spaces by electrical and electronic components and human occupants.

b. Transmitted heat through the rooms' structures due to temperature difference.

c. Outside air heat admitted into the building to satisfy the served area's ventilation and exhaust requirements.

HVAC equipment includes two 50 percent capacity air-handling units arranged in parallel to provide flexibility of operation by running only one air-handling unit during periods of light internal and outdoor heat loads.

The HVAC System is provided with smoke vent and purge mode operation to allow for smoke purging from the rooms housing electrical components and cables.

2.1.1.8 The WPB Personnel Handling Facility HVAC System removes the thermal loads by a 100 percent outdoor air HVAC System designed to satisfy the heating, ventilation, and cooling requirements using chilled water as the cooling medium. Full outside air without recirculation provides purging and precludes supply air contamination.

2.1.1.9 The WPB Office, I&C Shop, and Laundry Areas HVAC Systems remove the thermal loads from the served areas. An independent makeup air system provides the exhaust requirements for laundry dryers.

These systems are nonsafety-related and do not have specific requirements other than to maintain their respective served area's temperature within the design range.

The thermal loads are comprised of the following:

a. Heat dissipated into the spaces by electrical motors, components, washers, dryers, and human occupants.

b. Heat transmitted through building structure due to temperature differences and solar heat for the HVAC equipment room only.

2.1.1 System-Specific Requirements (continued)

c. Outdoor air heat admitted into the building and system to satisfy ventilation and exhaust air requirements.

2.1.1.10 The WPB Laboratory Areas HVAC System removes the thermal loads from the served areas by Once-through Ventilation and Air Conditioning System. In addition, the HVAC System provides a portion of the makeup air to the fume hood's exhaust system. Balance of the fume hood's makeup air is provided by dedicated makeup air system with provision for makeup air filtration and heating, thus providing energy savings during the cooling season. Exhaust air from the two radioactive service fume hoods is filtered through HEPA filters to prevent the release of contaminated air to the atmosphere. Perchloric hoods exhaust system is provided with washdown system and explosion-proof fans to prevent the explosion hazard due to the acid chemical reactions.

The hot laboratory and low-activity laboratory areas are maintained under a negative air pressure with respect to outside to prevent leakage of any potential contamination into the clean areas adjacent.

2.1.2 Design Conditions

2.1.2.1 The nonsafety-related FHB and WPB Ventilation Systems are not required for safe shutdown of the plant or for mitigation of design basis accident.

2.1.2.2 The safety-related FHB Emergency Exhaust System and the Spent Fuel Pool Pump Room Ventilation System and safety-related isolation dampers in the nonsafety FHB Systems are required to remain functional to mitigate the consequences of a fuel handling accident. They are not required for the safe shutdown of the plant.

2.1.2.3 The following design conditions apply to the FHB and WPB HVAC Systems:

Pressure

The fans and system's ductwork are designed to the maximum expected pressure that may be experienced during any mode of system operation.

Temperature

The Fuel Handling Building and Waste Processing Building HVAC Systems are designed for the following outdoor temperatures: summer 95 degrees F dry bulb and 79 degrees wet bulb (1 percent value); winter 16 degrees F dry bulb (99 percent value)

2.1.2 Design Conditions (continued)

The above outdoor design temperatures are based on the ASHRAE-1972 "Handbook of Fundamentals" for Raleigh-Durham Airport, North Carolina. The summer outdoor design temperatures are exceeded approximately 1 percent of 2928 hours or 30 hours during the months of June through September. The outdoor design temperature is below the design point approximately 1 percent of the 2160 hours or 22 hours for the winter months of December, January, and February.

The outdoor design temperature conditions for the relocated switchgear room on top of the Fuel Handling Building roof at El. 286 feet are an exception to the above. The design outdoor conditions are as follows:

Summer 104°F dry bulb (average)	113°F dry bulb (peak)
Winter 16°F dry bulb	40 to 100 percent relative humidity

The value of annual extreme summer temperatures is based on 60 years of records ending in 1960. The winter design temperature is an average of the normal and extreme winter design temperatures.

2.1.3 Airflow Requirements

2.1.3.1 FHB Operating Floor Normal Ventilation

The FHB Operating Floor Normal Ventilation System includes two subsystems each of which has two 25 percent capacity air-handling units and two 25 percent capacity centrifugal exhaust fans. Each subsystem serves the north and south part of the operating floor. Each subsystem airflow requirements are estimated based on the spaces calculated cooling load (sensible and latent) and the temperature difference between the room design temperature and supply air. The supply airflow remains constant, while the supply air temperature varies to satisfy the space cooling requirements. The exhaust air side system flow requirement is based on the supply air with adjustment for exhaust air density.

2.1.3.2 FHB Emergency Exhaust System

The Fuel Handling Building Emergency Exhaust System includes two 100 percent capacity redundant air cleaning units with centrifugal fans equipped with variable inlet vanes to control the airflow to satisfy the actual operating condition of maintaining negative pressure inside the FHB envelope. Each fan has adequate airflow capacity exceeding the calculated area leakage to rapidly draw down the envelope to the subatmospheric pressure.

2.1.3 Airflow Requirements (continued)

2.1.3.3 FHB Below Operating Floor Ventilation System

The Below Operating Floor FHB Normal Ventilation System includes two subsystems--one for the north end and the other for the south end. Each subsystem is equipped with two 100 percent capacity vane axial supply fans (one operating and one standby) and two 100 percent capacity centrifugal exhaust fans (one operating and one standby) to ensure continuous operation. Each subsystem's airflow requirement is based on the calculated cooling load in the spaces and the temperature difference between the space design temperature and the supply air temperature.

2.1.3.4 Spent Fuel Pool Pump Room Ventilation

The Spent Fuel Pool Pump Room Ventilation System includes two redundant 100 percent capacity safety-related subsystems. Each subsystem's air-handling unit airflow requirement is based on the calculated maximum design cooling load expected during normal or fuel handling accident operation and the temperature difference between the indoor design temperature and the supply air temperature.

2.1.3.5 The FHB Switchgear Room Ventilation System

The FHB Switchgear Room Ventilation System includes two pairs of the power roof ventilators, each pair of different capacity. The capacity of each pair is based on the cooling load and the outside air temperature. The small-capacity ventilators, each 100 percent, are based on the minimum ventilation requirements during the winter time when there is no heat release from the switchgear. The large-capacity ventilators, each 50 percent, are based on the maximum cooling air requirements during the summer's extreme outside air temperature of 105°F and the maximum internal heat release from the switchgear. The large-capacity ventilators are of 100 percent each when the outside air temperature is approximately 90°F or less.

2.1.3.6 WPB Areas Ventilation

The Waste Processing Building Area Ventilation Supply System includes two evaporative air cooler, each with two vane axial fans (one operating and one standby) arranged in parallel to provide 50 percent of the total supply airflow requirements. The system total airflow requirements are estimated based on the dry bulb temperature depression through the evaporative cooler and the served areas internal thermal loads. Based on the available evaporative efficiency of the evaporative cooler, a dry bulb temperature depression of 15.2°F is used in the calculation to determine the airflow to each individual space served by the system considering an average room temperature of 104°F. The total airflow of the system is the summation of all airflows of the individual spaces.

2.1.3.6 Airflow Requirements (continued)

The WPB Areas Ventilation Exhaust System includes two exhaust subsystems: one is a filter exhaust system consisting of four nonsafety air cleaning units. Only three of the four filtered exhaust units are run at one time. The non-running filtered exhaust serves as a back-up to the three running units. The filtered exhaust units also have one non-filtered standby fan. The other exhaust subsystem is non-filtered return/exhaust units. There are three of these return/exhaust susbsystem units consisting of two-100 percent centrifugal fans- one operating and one in stand-by. Each of the air cleaning units are able to exhaust 33 percent of the required airflow from the potentially contaminated areas. To prevent ex-filtration from these areas, the air cleaning units maintain a negative pressure (sub-atmospheric) in these areas.The local fan cooler's airflow requirements are estimated based on the served areas supplemental cooling requirements and the temperature difference between the space design temperature and the cooler supply air temperature.

2.1.3.7 WPB Control Room System

The airflow requirements of the WPB Control Room HVAC System are met by two 50 percent capacity air-handling units. The total airflow includes 50 percent outside makeup air to compensate for the air transferred to the corridor to be exhausted by the WPB Areas Filtered Exhaust System. The system's total design airflow is based on the calculated cooling load and the temperature difference between the space design temperature and the supply air temperature.

2.1.3.8 WPB Personnel Handling Facility System

The WPB Personnel Handling Facility HVAC System's airflow requirements are based on the calculated cooling load in the spaces and the temperature difference between the space design temperature and the supply air temperature. The exhaust air requirements are met by a 100 percent capacity exhaust fan discharging to the WPB vent stack.

2.1.3.9 WPB Office and Laundry Areas Systems

The WPB Office and Laundry Areas HVAC System's airflow requirements are provided by three subsystems. The airflow requirements to satisfy the cooling and heating loads are estimated based on the calculated internal heat gains and the temperature difference between the space design temperature and the supply air temperature. The dryer's makeup air is provided by dedicated system with an airflow based on the dryer's exhaust air requirements established by the manufacturer.

2.1.3.10 WPB Laboratory Areas System

The WPB Laboratory Areas HVAC System's cooling airflow requirements are estimated based on the areas internal heat gains and the temperature difference between the indoor design and supply air temperature. The airflow requirements for the laboratory fumed hoods are calculated based on the primary and secondary flow requirements for each hood. Fume hood exhausts are estimated based on the hood face velocity recommended by the manufacturer.

2.1.3.11 WPB I&C Shop Systems

The WPB Instruments and Controls Shop HVAC System's airflow requirements are estimated based on the calculated cooling load and the temperature difference between the space design temperature and the supply air temperature of the air conditioning unit.

2.1.4 Design Loads

2.1.4.1 Loads considered in the design of the Safety-Related HVAC System's components include seismic, internally generated missiles, static, dynamic, thermal, and vibration loads. The Nonsafety-Related HVAC System's components have been designed with consideration for static, dynamic, thermal, and vibration loads.

2.1.4.2 The Fuel Handling Building Safety-Related System has been designed to remain functional during operating basis and safe shutdown earthquakes. The safety equipment is designed to earthquake criteria developed for the Shearon Harris Plant site including horizontal and vertical maximum ground acceleration(g).

2.1.4.3 Ductwork of the safety-related systems of the Fuel Handling Building is designed to remain intact during an operating basis and safe shutdown earthquake. For further details, refer to Design Basis Document 003, "HVAC Ductwork."

2.1.4.4 The FHB safety-related air-handling unit's and air cleaning unit's fan housing is designed with sufficient material thickness to withstand equipment-generated missile penetration at the maximum operating speed of the fans.

2.1.4.5 The FHB fuel pool supply and exhaust nonsafety ducts within the vicinity of safety-related components and the fuel pool are seismically designed.

2.1.4.6 Air-handling unit and air cleaning unit fans are statically and dynamically balanced to the maximum allowable tolerance of 1 mil double amplitude for rotating shaft at design RPM. Fan operation is free of shaft whip and vibration.

2.1.4.7 Allowance for thermal expansion and contraction of the seismically supported ductwork has been considered for the FHB HVAC Systems by provision of flexible connectors or inherent flexibility in the ductwork configuration.

2.1.5. Environmental Conditions

2.1.5.1 Environmental conditions anticipated during normal and emergency operation for the systems equipment vary with the location of the equipment in the zones of the Fuel Handling Building and Waste Processing Building

2.1.5.2 The environmental envelope at which the equipment and components of the Fuel Handling Building HVAC Systems are qualified is as follows:

a. Normal Operating Environment--FHB Proper

Pressure	Atmospheric to 1/4 inch wg negative
Temperature	60°F to 104°F
Relative humidity	20-90 percent
Radiation dose	1×10^4 rads (integrated 40 years total)

b. Normal Operating Environment--FHB Switchgear Room

Pressure	Atmospheric
Temperature	60°F to 113°F
Relative humidity	100 percent

Post-Accident Environment--FHB Proper

Pressure	1/4 inch wg subatmospheric
Temperature	104°F
Relative humidity	100 percent
Radiation dose	1×10^3 rads (integrated 1-year accident)

2.1.5.3 The environmental envelope which the equipment and components of the Waste Processing Building Systems located in Zone A (FSAR Figure 3.11B-16) are qualified is as follows:

Normal Operating Environment

Pressure	Atmospheric to 1/4 inch wg negative
Temperature	60°F to 104°F
Relative humidity	20-90 percent
*Radiation dose	4.03×10^3 rads (integrated 40 years total)

Post-Accident Environment

Pressure	Atmospheric
Temperature	104°F
Relative humidity	100 percent
*Radiation dose	6.28×10^5 rads (integrated 10-year total)

*Radiation doses were taken from the FSAR Figure 3.11B-23 for Zone R6.

2.1.6 Interface Requirements

2.1.6.1 The Essential Services Chilled Water System provides chilled water as the cooling media to the cooling coils of the Spent Fuel Pool Pump Room Ventilation System air-handling units for removal of the cooling loads.

2.1.6.2 The Nonessential Services Chilled Water System provides chilled water as the cooling media to the cooling coils of the FHB Operating Floor Normal Supply System and all the water cooling coils in the WPB air-handling units for removal of the cooling loads.

2.1.6.3 The Plant Electrical System provides power to the motors and electrical heating coils of the FHB and WPB HVAC Systems. Safety-related components of the FHB safety systems required to mitigate the consequences of a fuel handling accident receive emergency power from their respective diesel generator.

2.1.6.4 The Service Water System provides the makeup water for the cooling media of the air washer section of the evaporative air coolers in the WPB Areas Supply System.

2.1.6.5 The Instrumentation & Control (I&C) System provides control power and instruments for local and remote control and monitoring of the various systems functions and parameters.

2.1.6.6 The Radiation Monitoring System monitors exhaust airflow in the WPB and RAB plant vent stacks to ensure that off-site dose limits are not exceeded.

2.1.6.7 The FHB Emergency Exhaust System and the WPB Areas Filtered Exhaust System air cleaning unit equipment drains are connected to the ??????? System.

2.1.7 Operational Requirements

2.1.7.1 The Fuel Handling Building HVAC Systems operational requirements vary with the mode of operation. Only the safety-related systems and isolation valves will remain functional in the event of a loss of off-site power.

2.1.7.2 During normal operation in the summer and the intermediate season when the outside air temperature range is 95°F down to approximately 30°F, the three out of four air-handling units and the associated exhaust fans are required to operate. These three Units, AH-56, AH-57, and AH-58 have available chilled water. The chilled water from the AH-59 was diverted to other systems as a result of overall cooling loads calculation revisions.

In order to maintain the minimum winter design temperature, all the electric heating coils in all four air-handling units are required to operate.

2.1.7 Operational Requirements (continued)

2.1.7.3 During normal operation of the plant, one supply and exhaust fan of each below operating floor FHB Normal Ventilation Subsystem is required to operate to satisfy the cooling demand and maintain the areas design temperature. One supply and exhaust fan of each subsystem is placed on standby. All the cooling requirements are satisfied by the outdoor air of the once-through subsystems.

2.1.7.4 The Spent Fuel Pool Pump Room Ventilation System is required for normal and fuel handling accident modes of plant operation. One train is required to operate while one is placed on standby.

2.1.7.5 The FHB Emergency Exhaust System is required to operate in the event of a fuel handling accident. The high radiation signal generated in the FHB will automatically start both trains of air cleaning units to draw down the FHB envelope to subatmospheric pressure and filter all potential airborne radioactive material through HEPA filters and charcoal adsorbers prior to release to the atmosphere. The operator, at his discretion, will place one train on standby when the subatmospheric pressure is established.

2.1.7.6 Interconnecting ducts between the two emergency air cleaning units were originally provided for decay heat cooling. However, calculation HNP-M/FHB-1002 determined that the actual temperature increase of the carbon in the shutdown unit is well below the minimum auto-ignition or desorption temperatures. The interconnecting duct was blanked off at each unit to maintain structural integrity while eliminating air flow. (Ref. ESR 97-00737)

2.1.7.7 The FHB Switchgear Room Ventilation System includes two pairs of the power roof ventilators: two small-capacity ventilators—one operating; one standby—are used during shutdown conditions or during the extremely low outside air temperature; two large-capacity ventilators—one operating; one standby—are used during an intermediate season and during the summertime. When the summer outside air temperature exceeds 90°F, the two large-capacity ventilators are required to operate.

2.1.7.8 The WPB HVAC Systems are required to operate during normal operation of the plant only and will automatically shutdown upon a loss of off-site power.

2.1.7.9 The operational requirements of the Laboratory Areas HVAC System include a separate AHU that supplies air to the office areas, low activity lab, hot lab, and other areas to remove the heat/cool load by the once-through system exhaust fans. The fume hood makeup air requirements are satisfied from three other continuous operating heating and ventilating units which include air-operated dampers that modulate the airflow recirculated to the unit to satisfy the demand for makeup air as required when more or less fume hoods are required to be used in both laboratories.

2.1.8 Test Requirements

2.1.8.1 During preoperational tests, the Fuel Handling Building and Waste Processing Building HVAC Systems are operated to demonstrate that each system functions as required and meets the test objectives and acceptance criteria.

2.1.8.2 Preoperational testing of the FHB Emergency Exhaust System and spent fuel pool pump room air-handling units is performed to demonstrate the integrated operation of the ESF Systems with and without the loss of off-site power upon receipt of the actuation signals.

2.1.8.3 The air cleaning units of the FHB Emergency Exhaust System and the WPB Filtered Exhaust System are tested as required in accordance with Regulatory Guides 1.52 and 1.140, respectively.

2.1.8.4 Surveillance requirements for the Fuel Handling Building Emergency Exhaust System are satisfied by demonstrating that the system is operable for the conditions described in the plant Technical Specifications.

2.1.8.5 In-Service Inspection of the Spent Fuel Pool Pump Room Ventilation System air-handling units chilled water cooling coils is based on "Inspection Program B" and a schedule for Quality B components. It is conducted in accordance with Section XI of the ASME Boiler and Pressure Vessel Code for Class 2 and 3 Components.

2.1.9 Regulatory Requirements

2.1.9.1 The FHB Emergency Exhaust System is designed to maintain the potentially contaminated envelope of the FHB negative pressure and provide particulate filtration and radioiodine adsorption to reduce the quantities of radioactive materials in the gaseous effluent released to the atmosphere during a fuel handling accident. (NRC Regulatory Guide 1.52, Rev. 2; ANSI N-509-1980, 10CFR100.)

2.1.9.2 The WPB Areas Filtered Exhaust System air cleaning units are designed as secondary system atmosphere cleanup units that provide particulate filtration and radioiodine adsorption to reduce the quantities of radioactive materials in the gaseous effluents released from the Waste Processing Building during normal operation. (NRC Regulatory Guide 1.140 Rev. 1; 10CFR50 Appendix A, GDC 60; 10CFR20; ANSI N509-1980.)

2.1.9.3 The Fuel Handling Building Safety-related HVAC System and isolation dampers are designed to withstand the effects of natural phenomena, including earthquakes and tornadoes. They are classified as safety Class 3 and meet Seismic Category I requirements (10CFR50 Appendix A GDC 2; NRC Regulatory Guide 1.26 Rev. 3, 1.29 Rev. 3).

2.1.9.4 The Fuel Handling Building Safety-related HVAC Systems and isolation dampers are designed to include 100 percent capacity redundancy of components to ensure that at least one of the subsystems is available in the event of a single

2.1.9 Regulatory Requirements (continued)

active failure and that the affected isolation damper fails in its safe position (10CFR50 Appendix A Introduction to General Design Criteria).

2.1.9.5 The WPB Normal and the FHB Emergency air cleaning units are designed for ease of maintenance and replacement of filters and charcoal adsorbent. The method of replacement is designed to minimize potential radiation exposure for personnel. (ANSI N509-1976)

2.1.9.6 The electrical components of the safety-related HVAC Systems receive power from separate Class 1E power sources of their respective safety train which are connected to the respective Diesel Generators (IEEE-308-1974; NRC Regulatory Guide 1.32 Rev. 2).

2.1.10 Safety and Health Requirements

2.1.10.1 The WPB Areas Ventilation System provides the safety features engineered into the Waste Processing Building to control the airborne radioactivity from potentially radioactive areas and limit the release of airborne fission products to protect the health and safety of the public during normal operation.

2.1.10.2 During emergency conditions, the FHB Emergency Exhaust System provides the safety function to draw down and maintain the spaces above the operating floor at 1/8-inch water gauge negative pressure to prevent spread of airborne fission products. The potentially radioactive air is filtered through HEPA filters and charcoal adsorber to limit the release of radioactive material and to protect the health and safety of the public.

2.1.10.3 All air released to the atmosphere by the WPB Ventilation Systems is monitored at the WPB vent stacks and all air released to the atmosphere by the FHB Ventilation Systems is monitored at the RAB vent stack for airborne radioactivity to provide protection for the health and safety of the public per 10CFR20, 10CFR50 Appendix A, GDC-64 and RG 1.21, Rev. 1.

2.1.10.4 The belt-driven fans are provided with belt guards to meet the requirements of OSHA Part 29CFR1910.219.

2.1.10.5 All electrical motors and electric heating coils of the FHB and WPB HVAC Systems are grounded in accordance with the National Electric Code.

2.1.10.6 The air cleaning units of the WPB Areas and FHB Emergency Exhaust Systems are designed and fabricated to include provision for locking of access doors to control unauthorized personnel access, preferably a padlock, as provided in Section 4.5.7 of ERDA 76-21.

2.1.11 Special Requirements

2.1.11.1 Each air cleaning unit charcoal adsorber is provided with a temperature detection system to annunciate an alarm in the Control Room HVAC panel and the local HVAC panel on pre-high and high charcoal temperature due to buildup of radioactive iodine. For the WPB units, the WPB Control Room Operator can stop the airflow through the affected filter train to extinguish a fire through oxygen starvation. In the event that charcoal temperature continues to rise and reach ignition level, the heat from the fire will actuate a multicycle sprinkler system actuated by automatic thermal detection both located above the filter housing and will prevent the fire from affecting other systems and equipment adjacent to this filter housing.

For the FHB safety-related units, the Main Control Room Operator shuts down the affected unit. Automatic multicycle sprinkler systems are provided above these units also.

2.1.11.2 The arrangement of the FHB and WPB HVAC Systems air-handling units and air cleaning units provide adequate separation to permit access, inspection, and in-place testing of the components. The air cleaning units are served by special handling equipment for unloading and loading of the adsorbers with charcoal to avoid contamination and radiation exposure to personnel.

2.1.11.3 The air cleaning units and ductwork of the FHB Emergency Exhaust System are designed as special construction to meet the requirements of ANSI N509-1976 standard. The systems equipment access doors are leaktight. The access doors are used during inspection, filter replacement, and maintenance.

2.2 Instrumentation and Control

2.2.1 Fuel Handling Building HVAC System

2.2.1.1 Fuel Handling Building Operating Floor Air Conditioning System

2.2.1.1.1 This system is designed to operate during normal operating conditions only, to provide ventilation for spent fuel pool areas, and to maintain an ambient temperature within high and low limits. The supply fans, as well as the exhaust fans, can be started manually from Main Control Room. Also, to minimize operator action, the system is designed such that upon starting the exhaust fan, the corresponding inlet and outlet dampers open, the respective supply fan starts, its corresponding inlet and outlet dampers open, and the respective electric heating and reheating coils in the supply unit are activated.

2.2.1.1.2 Each medium efficiency filter bank in the supply units is provided with a local differential pressure indicator which informs the operator when the filter is clogged and is due for replacement.

2.2.1.1 Fuel Handling Building Operating Floor Air Conditioning System (continued)

2.2.1.1.3 In order to maintain the low temperature limit, each electric heating coil is modulated by a temperature controller in accordance with the temperature in the supply air duct.

2.2.1.1.4 Low temperature in the supply duct downstream of the electric heating coil is alarmed in the Main Control Room to alert the operator of a heater failure. Under such conditions, the respective supply fan is tripped.

2.2.1.1.5 The area temperature is maintained at the low design limit by modulating the electric reheating coil through a temperature controller which receives inputs from a local area thermocouple.

2.2.1.1.6 In order to maintain the room ambient humidity and temperature at the high design limit, the cooling coil is activated according to area temperature or air humidity in the duct. On a rise in temperature or relative humidity above the setpoint, the chilled water valve opens to allow chilled water through the coil.

2.2.1.1.7 The operator can assess the performance of the chilled water cooling coil by monitoring return water temperature as well as the chilled water flow.

2.2.1.1.8 The operator is alerted of a failure in the cooling coil operation by high temperature and high humidity alarms in the Main Control Room.

2.2.1.1.9 To evaluate fan's performance, a flow switch is provided on each discharge header to provide low-flow alarm in the Main Control Room.

2.2.1.1.10 As a protection against fire, smoke detectors are installed in the system ducts in accordance with NFPA 90A. They provide input to the Fire Detection System which, in case of fire, will stop the fans and therefore isolate the system, and alarm locally and in the Main Control Room.

2.2.1.1.11 Radiation monitors are provided in the exhaust air ducts. Upon a high radiation signal, the system is automatically isolated by closing the isolation dampers and by shutting off the fans.

2.2.1.1.12 Following a fuel handling accident, the system is designed to be isolated. The safety-related isolation dampers located on both supply and exhaust ducts can be manually actuated from the Main Control Room upon receipt of an accident isolation signal. Also, the exhaust air-handling units can be stopped from the Main Control Room.

2.2.1.2 FHB Normal Ventilation System for Areas Below Operating Floor

2.2.1.2.1 The system is designed to provide ventilation for areas below operating floor for the cooling of the mechanical and electrical equipment. The supply and exhaust fans can be manually started from the Main Control Room. To minimize the operator action, the system is interlocked such that upon starting the exhaust fan, the outside air damper and the corresponding inlet and outlet dampers open. The respective supply fan will also start and its corresponding inlet and outlet dampers will open. The electric heating coil is permitted to be energized upon heating demand.

2.2.1.2.2 The electric coil is modulated by a temperature controller to maintain the temperature in the area at the minimum design temperature setpoint.

2.2.1.2.3 The medium efficiency filter located in the supply unit is provided with a local differential pressure indicator to inform the operator when the filter is clogged and due for replacement.

2.2.1.2.4 To ensure sufficient operating reliability, each of the supply and exhaust systems is provided with two fans arranged in parallel (one operating; one standby). Common header flow is measured. Since only one fan is in operation, the control circuit is designed such that if operating fan trips due to low flow or electrical fault, the standby fan starts automatically.

2.2.1.2.5 To evaluate the fans performance, a flow switch is installed on each common header to provide a low-flow alarm in the Main Control Room.

2.2.1.2.6 As a protection against fire, smoke detectors are installed in the supply and exhaust ducts in accordance with NFPA 90A. They provide input to the Fire Detection System which, in case of a fire, will stop the fans and isolate the system, and alarm locally and in the Main Control Room.

2.2.1.2.7 The system is designed to be isolated in case of a fuel handling accident. Therefore, upon high radiation signal the isolation dampers located in the branch ductwork in the Loading Area of the FHB are automatically actuated to close. They also can be operated from the Main Control Room.

2.2.1.2.8 The isolation valves are automatically actuated by the radiation signal from the operating floor area and therefore, on high radiation, the system will be isolated.

2.2.1.3 FHB Emergency Exhaust System for the Operating Floor

2.2.1.3.1 The FHB Emergency Exhaust System is designed to mitigate the consequences of the fuel handling accident by removing the airborne radioactivity from the FHB exhaust air prior to releasing to the atmosphere. In order to meet the single failure criteria, each of the two fan and filter subsystems is 100 percent capacity. Each unit is started manually from the Main Control Room or automatically upon receipt of a high radiation signal.

2.2.1.3 FHB Emergency Exhaust System for the Operating Floor (continued)

2.2.1.3.2 Each filter train consists of various filter units. Pressure differential instrumentation, in accordance with Regulatory Guide 1.52, is provided across filtration unit sections for local and Control Room indication. Control Room alarm is annunciated on high differential pressure across the prefilter, pre-HEPA filter, and overall filtration unit. The alarm will alert operator when the filter is becoming loaded to ensure filter loading does not exceed the technical specification limit for a combined pressure drop across the pre-HEPA filter, charcoal adsorber and post-HEPA filter. Pressure differential across the pre-HEPA filter section and across the overall filtration unit is indicated locally and in the Control Room and is recorded in the Control Room.

2.2.1.3.3 The temperature of the air entering the air cleaning unit is indicated and recorded in the Main Control Room.

2.2.1.3.4 The electric heating coil on each train is activated by a temperature controller such that the air temperature upstream the charcoal adsorber is maintained above a low limit to ensure that the relative humidity is at or below 70 percent. To evaluate the heating coil performance, a temperature indicator is provided in the Main Control Room to indicate the air temperature downstream the heating coil. For the operator information and action, a relative humidity sensor is provided upstream of the charcoal adsorber section with a high relative humidity alarm in the Main Control Room.

2.2.1.3.5 A Fire Detection Control System is provided for the charcoal adsorber section following requirements of RG 1.52. The temperature of air leaving the adsorber is monitored and alarmed in the Main Control Room. On temperature rising above a prehigh or high level, an alarm on the HVAC detection panel and in the Main Control Room is activated.

2.2.1.3.6 Interconnecting ducts between the two emergency air cleaning units were originally provided for decay heat cooling. However, calculation HNP-M/FHB-1002 determined that the actual temperature increase of the carbon in the shutdown unit is well below the minimum auto-ignition or desorption temperatures. The interconnecting duct was blanked off at each unit to maintain structural integrity while eliminating air flow. (Ref. ESR 97-00737)

2.2.1.3.7 The system is designed to maintain the potential contaminated areas of the Fuel Handling Building at a negative pressure to limit the post-accident radiological release from the areas. Therefore, each exhaust fan is provided with a variable inlet vane (VIV) damper. FHB envelope is maintained at a negative pressure by controlling this damper by differential pressure transmitters which measure the differential pressure between the FHB envelope and the outside atmosphere.

2.2.1.3 FHB Emergency Exhaust System for the Operating Floor (continued)

2.2.1.3.8 Fan discharge flow is monitored and recorded in the Main Control Room and low-flow alarm is provided to alert the operator of a fan failure.

2.2.1.3.9 Radiation monitors are provided in the exhaust air ducts. Upon a high radiation signal, the system is automatically isolated by closing the isolation dampers and by shutting off the fans.

2.2.1.4 Spent Fuel Pool Pump Room Ventilation System

2.2.1.4.1 The system is designed to maintain the area temperature at or below the design limit for the protection of the equipment and motors. Each unit can be started manually from Main Control Room.

2.2.1.4.2 To ensure the operation of the system in case of loss of off-site power, the fans are interlocked with their respective diesel generator.

2.2.1.4.3 The medium efficiency filter bank is provided with a local differential pressure indicator which informs the operator when the filter is clogged and due for replacement.

2.2.1.4.4 The chilled water three-way valve is modulated with respect to the highest area temperature to ensure that the high temperature limit is not exceeded. A failure in the actuation of the three-way valve or in the cooler operation is annunciated in the Control Room by a high temperature alarm. Also, Main Control Room temperature indicators are provided.

2.2.1.4.5 The operator is alerted of a fan failure by a low discharge flow alarm in the Main Control Room.

2.2.1.4.6 The operator can access the performance of the cooling coil by monitoring return water temperature as well as the chilled water flow.

2.2.1.5 North H&V Room Heating and Ventilating System

2.2.1.5.1 The system is designed to maintain the temperature in the North H&V rooms within design limits. The low limit is maintained by a self-contained heater with a built-in thermostat. The high limit is maintained by ventilation through the fan. The fan can be started manually from Main Control Room switches or automatically upon receipt of a high temperature signal from an area thermostat.

2.2.1.5.2 To minimize the operator action, the system is interlocked such that when the fan starts, the outside air intake damper and the discharge damper open automatically.

2.2.1.6 Clothing Change Area Ventilation System

2.2.1.6.1 The system is designed to ventilate the clothing change area during normal conditions. The fan provided for this area has a manual actuation from a local control switch. This will permit the personnel in the clothing change area to start the system whenever it is necessary.

2.2.1.7 Cask Decontamination Area and Decontamination Enclosure Ventilation System

2.2.1.7.1 The system is designed to provide ventilation to the Decontamination Area or the decontamination enclosure, as required, during normal conditions. The exhaust fan is connected to the normal exhaust system of the FHB and connected to the normal exhaust system of the FHB, and therefore it cannot be started unless at least one of the North FHB Operating Floor Normal Exhaust System fans is in operation.

2.2.1.7.2 In order to select which of the two areas has to be ventilated, according to where decontamination is in progress, a local control switch is provided to actuate the isolation dampers.

2.2.1.7.3 The exhaust fan can be started from a local control switch. To minimize the operator action, the system is designed such that upon starting the exhaust fan, the discharge damper and the corresponding dampers to the selected area shall open.

2.2.1.7.4 The operator is alerted of a fan failure by a low discharge flow alarm in the Main Control Room.

2.2.1.7.5 The fan is protected from operating at runout capacity by an interlock from a flow switch. On low flow, when fan is in operation, an interlock will automatically stop the fan.

2.2.1.8 FHB Switchgear Ventilation System

NA–Local Control only. See CWD's 2166-B-401, Shts. 2928, 2929, and 2930

2.2.2 Waste Processing Building

2.2.2.1 Waste Processing Areas Ventilation System

2.2.2.1.1 Supply System

2.2.2.1.1.1 The system is designed to provide normal ventilation and to maintain an indoor temperature suitable for plant personnel and continuous operation of systems and equipment. The supply air temperature is maintained with high and low temperature limits. Depending on the outdoor temperature, the intake air will be warmed or cooled in order to meet the design temperature requirements. Temperature switches receiving inputs from sensing thermocouples located on the supply duct and in the room will actuate the evaporative cooler and respectively the heating coil to maintain the temperature of the supply air and in the room within design limits.

2.2.2.1.1.2 The system is designed to operate as a once-through type during summer operation and with an economizer during winter operation recirculating air to the supply system. A thermocouple located on the outside air intake provides input to a temperature switch which positions the outside air intake damper to a minimum flow and opens the return dampers as the temperature drops below the design limit.

2.2.2.1.1.3 The system is freeze-protected against a heater failure. Temperature instrumentation located downstream the heater will trip the supply fan upon a heater failure when sensed temperature drops below setpoint. The operator is alerted by a low temperature alarm in the Waste Processing Control Room.

2.2.2.1.1.4 The medium efficiency filter located in the supply unit is provided with a local pressure differential indicator. The operator is informed when the filter is clogged and element replacement is necessary.

2.2.2.1.1.5 The Evaporative Air Cooler is provided with a level switch which is interlocked with its recirculation pumps on a start permissive/trip. The level switch actuates an alarm in the Control Room to alert the operator of lack of makeup water.

2.2.2.1.1.6 Each supply fan discharge flow is measured and monitored in the Waste Processing Control Room for the operator to determine the system operating efficiency. Also, a low-flow condition will start the standby fan and actuate an alarm in the Waste Processing Control Room to alert the operator of any fan or damper failure.

2.2.2.1.1.7 To minimize the operator action, the system is interlocked such that upon starting the supply fan, the corresponding inlet and outlet dampers will open.

2.2.2.1 Waste Processing Areas Ventilation System (continued)

2.2.2.1.1.8 The contaminated spaces of the WPB are maintained under slightly negative pressure to prevent the outleakage of contaminated air. Differential pressure transmitters for each zone will modulate the pneumatic damper and reduce the supply air volume until the negative pressure is achieved. The operator can monitor if the negative pressure is maintained through a Control Room differential pressure indicator.

2.2.2.1.1.9 The operator can monitor the supply air to the contaminated areas and the total flow via Waste Processing Control Room indicators.

2.2.2.1.1.10 As a protection against fire, smoke detectors are provided in the supply duct branches to both contaminated and noncontaminated areas in accordance with NFPA 90A. They provide input to the Fire Detection System.

2.2.2.1.2 Filtered Exhaust System

2.2.2.1.2.1 The exhaust system is designed to continuously exhaust air from contaminated spaces of the WPB area through the filter system and discharge to the building vent stack. All the filters—medium efficiency filter and HEPA filter—are provided in accordance with Reg. Guide 1.140, with differential pressure local indicator and local and Waste Processing Control Room high alarms to inform the operator when the filters are clogged and elements need replacement. Also, the overall differential pressure across the entire filter train is monitored and high alarmed in the Waste Processing Control Room.

2.2.2.1.2.2 To minimize the operator action, the system is designed such that upon starting any exhaust fan from a Control Room switch, the two corresponding inlet dampers will automatically open.

2.2.2.1.2.3 A moisture element is provided before the charcoal adsorber which provides a local indication and a high moisture alarm in the Waste Processing Control Room to alert the operator. The unit exhaust fan is provided with variable inlet vanes to keep the flow constant. A flow element provided in the discharge duct provides signal to the inlet vane positioner to maintain a constant flow. Exhaust flow can be adjusted by actuating the VIV damper through a remote selector switch.

2.2.2.1.2.4 A Fire Detection Control System is provided for the charcoal adsorber section following requirements of Reg. Guide 1.140. The temperature of air leaving the charcoal adsorber is monitored. On temperature rising above a prehigh or high level, an alarm on the detection panel and in the Waste Processing Control Room is annunciated. Under this mentioned condition, the fan will be tripped, the dampers will be closed, and the system will be isolated.

2.2.2.1 Waste Processing Areas Ventilation System (continued)

2.2.2.1.2.5 Fan's discharge flow is monitored locally and in the Control Room and a low-flow alarm is provided in the Control Room to alert the operator of fan failure. To prevent spurious alarms, the low-flow alarm is delayed by a time lag. On low flow, the fan will be automatically tripped. The operator will manually start the standby fan.

2.2.2.1.2.6 The Filtered Exhaust System is not required to operate during safe shutdown or accident conditions. Upon a loss of power, the system will be shut down.

2.2.2.1.3 Return/Exhaust Systems From Noncontaminated Areas

2.2.2.1.3.1 To ensure the system reliability, each return/exhaust system from noncontaminated areas consists of two fans arranged in parallel (one operating—one standby). An airflow monitor is provided in the common intake of each pair of fans and the common discharge of the chiller room exhaust fans and switchgear room exhaust fans. Fan failure or loss of airflow will be annunciated in the WPB Control Room to alert the operator. The corresponding standby fan will start automatically upon failure of the operating fan.

2.2.2.1.3.2 To minimize the operator action, the system is interlocked such that the inlet and discharge dampers will open when the corresponding fan is operating.

2.2.2.1.3.3 The system is controlled to operate on the return mode during winter. Therefore, the mixing dampers are interlocked to open or close according to the outside air temperature when the corresponding fan is started.

2.2.2.1.3.4 The Return/Exhaust System is not safety-related. It is not required to operate during accident conditions. Upon a loss of power, the system will be shut down.

2.2.2.1.4 Local Fan Coolers

2.2.2.1.4.1 The system is provided for supplementary cooling. With the exception of AH-75, each fan can be started manually from a Waste Processing Control Room switch or automatically from a room thermostat. AH-75 (local fan cooler for WPB Switchgear room #1), can only be started from a Waste Processing Control Room switch. Also, on rise of room temperature above its setpoint, the thermostat opens the two-position chilled water valve allowing full flow of water through the coil.

2.2.2.1.4.2 The operator is alerted of any malfunction in the system's operation by a high temperature alarm in the Waste Processing Control Room.

2.2.2.1.4.3 The unit medium efficiency filter is provided with a local differential pressure indicator to alert the operator when the filter is clogged due for replacement.

2.2.2.1.4.4 The operator can assess the performance of the chilled cooling coil by monitoring the return water temperature as well as the chilled water flow.

2.2.2.1.4 Local Fan Coolers (continued)

2.2.2.1.4.5 The operator is alerted of a fan failure by a low discharge flow alarm in the Waste Processing Control Room.

2.2.2.2 WPB Control Room HVAC System

2.2.2.2.1 The system is designed to provide personnel comfort and suitable environment for equipment and controls continuous operation by maintaining the room temperature within designed high and low limits. Each of the two 50 percent capacity units arranged in parallel is provided with electric heating coil, chilled water cooling coil, and electric reheat coil which are all modulated to maintain the design temperature.

2.2.2.2.2 A temperature controller receiving inputs from a thermocouple located in the duct downstream of the heater modulates the heating coil to ensure that the air temperature doesn't go below design limit. The operator is alerted of a heater failure by a low temperature alarm in the WPB Control Room. Also, to protect the system against a heater failure, the low temperature signal will trip the fan.

2.2.2.2.3 In order to maintain the indoor design temperature, a thermostat located in the space shall modulate both the chilled water control valve and the electric reheat coil in sequence. A humidity controller, located in the return air duct, overrides the space thermostat and opens the chilled water valve to provide cooling whenever the relative humidity rises above its setpoint.

2.2.2.2.4 The operator can evaluate the chilled water cooling coil performance by monitored return water temperature as well as the chilled water flow.

2.2.2.2.5 The unit medium efficiency filter is provided with a local differential pressure indicator to inform the operator when the filter is clogged and due for replacement.

2.2.2.2.6 During normal operation, the system is designed to operate on a recirculation mode with only partial air from outside. To minimize the operator action, the system is interlocked such that upon starting the fan from a WPB Control Room switch, the outside air intake damper and the return damper shall open and the power circuits to the electric heating coil and electric reheat coil shall be activated.

2.2.2.2.7 Outside air intake flow is measured, indicated in the Control Room, and added to the flow totalizer for all the contaminated areas in the Waste Processing Building.

2.2.2.2.8 The operator is alerted of fan failure or low-flow condition by a common header discharge low-flow alarm in the WPB Control Room. A WPB Control Room indicator is also provided.

2.2.2.2.9 As a protection against fire, smoke detectors are installed in the supply and return ducts according to NFPA 90A. They provide input to the Fire Detection System; and in the case of fire or smoke, the air-handling units will be tripped.

2.2.2.2 WPB Control Room HVAC System (continued)

2.2.2.2.10 The smoke purge fans can be manually started from WPB Control Room switches. To minimize the operator action, the smoke purge fans have interlocks such that upon starting, the corresponding inlet and outlet dampers will open automatically. Also, when starting the smoke purge fan, the outside air intake damper opens 100 percent, the return damper closes, and the diverting damper opens to create the once-through pattern for smoke operation to exhaust smoke from relay room, Control Room, computer room, and cable vault room.

2.2.2.2.11 DELETED

2.2.2.3 WPB Personnel Handling Facility HVAC System

2.2.2.3.1 The system is designed to provide personnel comfort and suitable environment for equipment and controls operation. The supply air temperature is maintained within high and low temperature design limits by automatic actuation of the electric heating coil, cooling coil, and electric reheat coils.

2.2.2.3.2 To minimize the operator action, the system is designed such that upon starting the supply fan manually from a WPB Control Room switch, the outside air intake damper will open automatically, power circuits to the electric heating coil, the cooling coil valve, and the six electric reheat coils are activated and the exhaust fan starts. The exhaust fan is provided with an overriding control switch on the control board for normal actuation.

2.2.2.3.3 The medium efficiency filter located on the supply air unit is provided with a local differential pressure indicator to inform the operator when the filter is clogged and due for replacement.

2.2.2.3.4 The electric heating coil is modulated according to the temperature of the air downstream. The operator is alerted of a heater failure by a low temperature alarm in the WPB Control Room. Also, the system is freeze-protected against a heater failure by a fan trip interlock on low temperature. An overriding switch is provided in the WPB Control Room to start the fan in smoke conditions and therefore to ensure a smoke exhaust even when the temperature is low.

2.2.2.3.5 The cooling coil chilled water valve is modulated according to the requirements of supply air temperature and the area temperature in the six zones served by this air conditioning system.

2.2.2.3.6 The operator can assess the performance of the chilled water cooling coil performance by monitoring return water temperature as well as the flow through the coil.

2.2.2.3.7 The electric reheat coils are modulated and controlled by the respective temperature controllers (wall-mounted thermostat).

2.2.2.3 WPB Personnel Handling Facility HVAC System (continued)

2.2.2.3.8 Discharge airflow of both supply and exhaust fans is locally monitored. A low-flow alarm is provided in the WPB Control Room to alert the operator of a fan failure. To prevent spurious alarms, the alarm is delayed by a time lag.. A fan trip is also alarmed in the WPB Control Room.

2.2.2.3.9 As a protection against fire, smoke detectors are installed in the supply and exhaust ducts following requirements of NFPA 90A. They provide input to the Fire Detection System. In case of a smoke or fire, the fans will be tripped and the system will be isolated,; fire will be alarmed locally and in the WPB Control Room.

2.2.2.3.10 DELETED

2.2.2.4 WPB Office and Laundry Areas HVAC System

2.2.2.4.1 Laundry Dryers Ventilation System

2.2.2.4.1.1 The system is provided to supply makeup air for the exhaust air of the dryers in the laundry areas. The system is designed such that upon starting any of the exhaust fans from local control switches, the corresponding supply fans start automatically, the inlet dampers on each branch open, and the power circuits for the respective electric heating coil are activated.

2.2.2.4.1.2 The medium efficiency filter located on the he outside air intake duct common for all the makeup air fans is provided with a differential pressure indicator which inform the operator when the filter is clogged and due for replacement.

2.2.2.4.1.3 The electric heating coil is modulated by a temperature controller which receives inputs from a thermocouple located downstream of the coil to maintain the supply air temperature at the setpoint.

2.2.2.4.1.4 Common discharge header airflow from all the dryers is measured by flow instrumentation and recorded in the WPB Control Room. This will permit the operator to assess system's performance. Also, low-flow condition of fan failure is alarmed in the WPB Control Room.

2.2.2.4.2 Laundry Facility Air Conditioning System

2.2.2.4.2.1 To minimize the operator action, the system is interlocked such that upon starting the supply fan from a WPB Control Room switch, the outside air intake damper shall open; the power circuits to the electric heating coil, the cooling valve, and the electric reheat coil are activated; and the exhaust fan starts.

2.2.2.4.2.2 The supply unit medium efficiency filter is provided with a differential pressure indicator to inform the operator when the filter is clogged and due for replacement.

2.2.2.4 WPB Office and Laundry Areas HVAC System (continued)

2.2.2.4.2.3 The electric heating coil is modulated according to the temperature of air in the supply duct. A heater failure is announced by a low temperature alarm in the WPB Control Room. Also, the system is protected against a heater failure by an automatic trip of the supply fan on low supply air temperature.

2.2.2.4.2.4 The cooling coil chilled water three-way valve and the reheat coil are modulated to maintain the room design temperature by controllers which receive inputs from a thermocouple located in the hot laundry room.

2.2.2.4.2.5 The operator can assess the performance of the chilled water cooling coil by monitoring chilled water return temperature as well as the flow through the coil.

2.2.2.4.2.6 The operator is alerted of low-flow condition or fan failure for both supply and exhaust fans by low discharge flow alarms in the WPB Control Room.

2.2.2.4.2.7 As a protection against fire, smoke detectors are installed in the supply and exhaust ducts following requirements of NFPA 90A to alarm fire locally and in the WPB Control Room. In a smoke or fire condition, the operator can start the system from a special control switch in the WPB Control Room for smoke purge operation.

2.2.2.4.2.8 The ultrasonic tank area can be ventilated from the hot laundry room by manually actuating the position of the diverting dampers from a WPB Control Room switch.

2.2.2.4.2.9 The system is not required to operate during accident or safe shutdown conditions. Upon a loss of off-site power, the system will be shut down.

2.2.2.4.3 Office Areas Air Conditioning System

2.2.2.4.3.1 To minimize the operator action, the system is interlocked such that upon starting the supply fan manually from a WPB Control Room switch, the return air fan starts automatically; the power circuits of the electric heating coil and the zone heating coils are activated; the solenoid from the chilled water three-way valve from the cooling coil is energized; and the outside air intake damper and return damper are energized to be modulated.

2.2.2.4.3.2 The system is designed to operate on a maximum recirculation mode during winter conditions when outdoor temperature drops below a design limit or during summer condition when temperature rises above design limit. The outside air intake damper and the return air damper are modulated according to the outside air temperature, the supply duct air temperature, and the Technical Work Room temperature.

2.2.2.4.3.3 The supply unit medium efficiency filter is provided with a differential pressure indicator to inform the operator when the filter is clogged and due for replacement.

2.2.2.4 WPB Office and Laundry Areas HVAC System (continued)

2.2.2.4.3.4 The electric heating coil is modulated according to the temperature of the air in the supply duct. A heater failure is announced by a low temperature alarm in the WPB Control Room. Also, the system is protected against a heater failure by an automatic trip of the supply fan on low supply air temperature.

2.2.2.4.3.5 The chilled water three-way valve for the cooling coil is modulated by an adjustable temperature sensor located downstream of the cooling coil. To prevent a high humidity, a moisture element located in the Technical Work Room shall override the air-handling unit temperature controller and open the chilled water valve to provide cooling whenever the relative humidity rises above its setpoint.

2.2.2.4.3.6 The operator can assess the performance of the cooling coil by monitoring return water temperature as well as flow through the coil.

2.2.2.4.3.7 Each electric reheat coil is modulated and controlled by a wall-mounted thermostat in order to maintain the design temperature in the corresponding area.

2.2.2.4.3.8 Discharge flow from the supply and return air fans is monitored. Low flow or fan failure is alarmed in the WPB Control Room.

2.2.2.4.3.9 As a protection against fire, smoke detectors are installed in the supply and return ducts. In the event of fire or smoke, the operator receives an alarm from the Fire Detection System; and from a WPB Control Room switch, he can initiate the smoke exhaust mode.

2.2.2.4.3.10 DELETED

2.2.2.5 WPB Laboratory Areas HVAC System

2.2.2.5.1 The system is designed to provide personnel comfort and suitable environment for the equipment and controls. The supply air temperature is maintained within high and low temperature designed limits by an automatic actuation of the electric heating coil, cooling coil, and electric reheat coils according to the temperature requirements.

2.2.2.5.2 To minimize the operator action, the system is designed such that upon starting the supply fan manually from a WPB Control Room switch, the outside air intake damper will open automatically; power circuits to the electric heating coil; the cooling coil valve and the electric reheat coils are activated; and the exhaust fans starts. The exhaust fans are provided with overriding control switches on the control board for normal actuation. Also, when the exhaust fan starts, the discharge damper opens.

2.2.2.5 WPB Laboratory Areas HVAC System (continued)

2.2.2.5.3 The supply unit medium efficiency filter is provided with a local differential pressure indicator to inform the operator when the filter is clogged and due for replacement.

2.2.2.5.4 The electric heating coil is modulated according to the temperature of the air downstream. The operator is alerted of a heater failure by a low temperature alarm in the WPB Control Room. Also, the system is freeze protected against a heater failure by a trip interlock on low temperature. An overriding switch is provided in the WPB Control Room to start the fan in smoke condition to ensure a smoke exhaust even when the temperature is low.

2.2.2.5.5 The cooling coil chilled water valve is modulated according the requirements of supply air temperature and the area temperature in the zones served by this air conditioning system.

2.2.2.5.6 The operator can assess the performance of the chilled water cooling coil by monitoring return water temperature as well as the flow through the coil.

2.2.2.5.7 The electric reheat coil is modulated and controlled by a temperature controller (wall-mounted thermostat).

2.2.2.5.8 Discharge airflow of supply and exhaust fans is locally monitored. A low-flow alarm is provided in the WPB Control Room to alert the operator of fan failure. A fan trip is alarmed in the WPB Control Room.

2.2.2.5.9 As a protection against fire, smoke detectors are installed in the supply and exhaust ducts following requirements of NFPA 90A. They provide input to the Fire Detection System. In case of smoke or fire, the fans will be tripped and the system will be isolated.

2.2.2.5.10 Humidification is provided in the supply air. The operator is alerted of a low humidity condition by a low humidity alarm in the WPB Control Room.

2.2.2.5.11 The laboratory areas are maintained under a slightly negative pressure. Differential pressure instrumentation is provided between each room and outside which modulates the exhaust dampers and the VIV of the exhaust fan to maintain the design differential pressure. The operator is alerted of any failure in the automatic actuation by low differential pressure alarms and indicators in the WPB Control Room.

2.2.2.5.12 DELETED

2.2.2.5 WPB Laboratory Areas HVAC System (continued)

2.2.2.5.13 The Fume Hoods Makeup Air Supply System is designed to supply outside air and maintain the air temperature above design temperature limit. To minimize the operator action, the system is interlocked such that upon starting the supply fan from the outside air intake damper, the return damper and the electric heating coil are energized.

2.2.2.5.14 All the filters in the system are provided with differential pressure indicators to inform the operator when each filter is clogged and due for replacement.

2.2.2.5.15 The electric heating coil is modulated according to the temperature in the supply duct. The operator is alerted of a heater failure by a low temperature alarm in the WPB Control Room. Also, on low temperature, the WPB supply fan is tripped.

2.2.2.5.16 Supply fan discharge flow is measured. A low-flow condition or a fan failure is alarmed in the WPB Control Room.

2.2.2.5.17 The WPB Laboratory Areas HVAC System is not required to operate during an accident condition. Upon a loss of power, the system will be shut down.

2.2.2.6 WPB I&C Shop HVAC System

2.2.2.6.1 To minimize the operator action, the system is interlocked such that upon starting the supply fan from a WPB Control Room switch, the outside air intake damper shall open; the power circuits to the electric heating coil; the cooling coil valve and the electric reheat coil are activated; and the exhaust fan starts.

2.2.2.6.2 The supply unit medium efficiency filter is provided with a differential pressure indicator to inform the operator when the filter is clogged and due for replacement.

2.2.2.6.3 The electric heating coil is modulated according to the temperature of air in the supply duct. A heater failure is announced by a low temperature alarm in the WPB Control Room. Also, the system is protected against a heater failure by an automatic trip of the supply fan on low supply air temperature.

2.2.2.6.4 Both the cooling coil chilled water three-way valve and the reheat coil are modulated to maintain the room design temperature by a controller which receives inputs from a thermocouple located in the I&C Shop room.

2.2.2.6.5 The operator can assess the performance of the chilled water cooling coil by monitoring chilled water return temperature as well as the flow through the coil.

2.2.2.6.6 The operator is alerted of low-flow condition or fan failure by low discharge flow alarms in the WPB Control Room.

2.2.2.6 WPB I&C Shop HVAC System (continued)

2.2.2.6.7 As a protection against fire, smoke detectors are installed in the supply and exhaust ducts following requirements of NFPA-90A in a smoke or fire condition, the operator can start the system from a special control switch in the WPB Control Room and initiate the smoke exhaust mode of operation.

2.2.2.7 WPB Vent Stacks

2.2.2.7.1 The Waste Processing Building vent stacks are monitored for radiation release per 10CFR20, 10CFR50 App. A, GDC-64 and R.G 1.21.

2.3 Electrical

2.3.1 Power for the FHB HVAC Systems is both from ESF and Non-ESF load centers. Waste Processing Building HVAC is powered from the Non-ESF load centers.

2.3.2 Power Requirements

2.3.2.1 The ESF and Non-ESF loads for the FHB HVAC Systems are tabulated as follows by power source:

480-V MCC	Location	PD&MD Sheet	Description	Load	DAC-1 Status
1-4A11	FHB El. 236'0"	203 S01	Fan AH-59 (1-4X-NNS)	40 HP	C
			Fan AH-57 (1-4X-NNS)	40 HP	C
			Heater EHC-92 (1-4X-NNS) for AH-57	65 kW	C
			Heater EHC-96 (1-4X-NNS) for AH-59	65 kW	C
			Fan E-25 (1-4X-NNS)	40 HP	C
			Fan AH-22 (1-4A-NNS)	100 HP	C
1-4B12	FHB El. 286'0"	204 S01	EUH-66 (1-4X) Disc Switch	50 kW	I
			PV-25 (1-4X-NNS)	5 HP	I
			PV-23 (1-4X-NNS)	3/4 HP	C
			EUH-65 (1-4X) Disc Switch	50 kW	I
			PV-24 (1-4X-NNS)	3/4 HP	Standby
			PV-26 (1-4X-NNS)	5 HP	I
1-4A24	FHB El. 236'0"	205 S01	AC Unit Fan AH-77 (1-4X)	5 HP	C
1-4A23	FHB El. 261'0"	209 S01	EHC-104 (1-4X) for AH-55 (1-4X)	49 kW	C
			EHC-118 (1-4X) for AH-55 (1-4X)	26 kW	C
			Fan for AH-55 1(4X)	5 HP	C
			MOV 7WC-B1-1-4)	0.13 HP	C
		209 S02	EHC-77 (1-4X) for AH-42 (1-4X)	10 kW	C
			EHC-97 (1-4X) for AH-83 (1-4X)	80 kW	C
1-4A1021	FHB El. 261'0"	227 S02	HVAC Cond Pump 1-4X-NNS	5 HP	I
			Fan AH-21 (1-4A-NNS)	100 HP	C/R
1-4A1022	FHB El. 261'0"	228 S01	Fan E-23 (1-4X-NNS)	40 HP	C
1-4B11	FHB El. 236'0"	231 S01/S02	Fan AH-58 (1-4X-NNS)	40 HP	C
			EHC-90 (1-4X-NNS) for AH-56	65 kW	C
			Fan AH-21 (1-4B-NNS)	100 HP	C/R
			EHC-94 (1-4X-NNS) for AH-58	65 kW	C
			Fan E-26 (1-4X-NNS)	40 HP	C
			Fan AH-56 (1-4X-NNS)	40 HP	C
			Fan E-24 (1-4X-NNS)	50 HP	C

*C = Continuous, I - Intermittent, C/R = Continuous/Redundant

480-V MCC	Location	PD&MD Sheet	Description	Load	DAC-1 Status
1-4B24	FHB El. 236'0"	232 S02	AH Unit AH-74	7.5 HP	C
1-4B23	FHB El. 261'0"	235 S01	AH-40 (1-4X-NNS)	30 HP	C
		235 S02	EHC-98 (1-4X-NNS) for AH-40 (1-4X-NNS)	80 kW	C
1-4B1021	FHB El. 261'0"	254 S01	EUH-31 (1-4X-NNS) Disc Switch	15 kW	C
			Fan E-84 (1-4X-NNS) for AH-56	7.5 HP	C
1-4B1022	FHB El. 261'0"	255 S02	Fan AH-22 (1-4X-NNS)	100 HP	C/R
			EHC-109 (1-4X-NNS) for AH-22	10 kW	C
			Fan E-15 (1-4X-NNS)	1.5 HP	C
1&4A33-SA	FHB El. 261'0"	177 S01	MOV 3FV-B2-SA-1-4	0.7 HP	I
			EHC-17 (1-4X-SA)	40 kW	C/R/E
			Fan E-12 (1-4X-SA)	30 HP	C/R/E
			Fan AH-17 (1-4A-SA)	20 HP	C/R/E
1&4B33-SB	FHB El. 261'0"	183 S01	EHC-18 (1-4X-SB)	40 kW	C/R/E
			Fan E-13 (1-4X-SB))	20 HP	C/R/E
			Fan AH-17 (1-4B-SB)	20 HP	C/R/E
			MOV 3FV-B4-SB-1-4	0.7 HP	I
			AH-29 (1X-SB)	2 HP	I
480-V SWGR	**Location**	**PD&MD**	**Description**	**Load**	**Status***
1-4A1	FHB	85	Fan-E-14 (1-4A-NNS)	125 HP	C/R
			Fan-E-11 (1-4A-NNS)	125 HP	C/R
			EHC-91 (1-4X-NNS) for AH-57	375 kW	C
			EHC-95 (1-4X-NNS) for AH-59	375 kW	C
1-4B1	FHB	90	Fan E-14 (1-4B-NNS)	125 HP	C/R
			EUH-29Z (1X-NNS) for AH-147	200 kW	C/R
			EHC-15 (1-4X-NNS)	805 kW	C
1-4A102	FHB	68	EHC-13 (1-4X-NNS) for AH-21	805.29 kW	C
1-4B102	FHB	69	Fan E-11 (1-4B-NNS)	125 HP	C/R
			EHC-89 (1-4X-NNS) for AH-56	375 kW	C
			EHC-15 (1-4X-NNS) for AH-58	375 kW	C

*C = Continuous, I - Intermittent, C/R = Continuous/Redundant
C/R/E = Continuous Redundant in Emergency Mode only

2.3.2.2 The non-ESF loads for the WPB are tabulated as follows by power source:

480-V MCC	Location	PD&MD Sheet	Description	Load	DAC-1 Status*
1-4A25	WPB El. 291'0"	206 S01	Fan ES-4 (1-4X-NNS)	20 HP	I
			EHC-83 (1-4X-NNS) for S-56	42 kW	C
			Fan S-53 (1-4X-NNS)	5 HP	C
			Fan S-54 (1-4X-NNS)	5 HP	C
			EHC-84 (1-4X-NNS) for S-57	42 kW	C
			EHC-85 (1-4X-NNS) for S-57	42 kW	C
			Fan S-55 (1-4X-NNS)	5 HP	C
			EHC-81 (1-4X-NNS) for AH-54	42 kW	C
1-4A21	WPB El. 291'0"	207 S01	Fan E-51 (1-4X-NNS)	10 HP	C
			Fan E-82 (1-4X-NNS)	5 HP	C
			EHC-80 (1-4X-NNS) for S-53	42 kW	C
			WC-3 Refrig Transfer Pump	3 HP	C/S
			MOV 75W-B306-14	0.13 HP	I
			WC-3 Oil Pump Motor	2 HP	C
			Pump P-11 (1-4A-NNS) (EAC-5)	1 HP	C/S
			Pump P-12 (1-4A-NNS) (EAC-6)	1 HP	C/S
			Fan R-7 (1-4A-NNS)	40 HP	C/R
		207 S02	EHC-82 (1-4X) for S-55	42 kW	C
			Fan S-56 (1-4X)	5 HP	C
			Fan S-57 (1-4X)	5 HP	C
			Fan S-58 (1-4X)	5 HP	C
1-4A32	WPB El. 236'0"	211 S02	Fan AH-72 (1-4X)	15 HP	I
1-4A33	WPB El. 276'0"	212 S01/S02	Fan AH-83 (1-4X-NNS)	30 HP	C
			Fan EB-4 (1-4X-NNS)	7.5 HP	I
			Fan EB-5 (1-4X-NNS)	7.5 HP	I
			EHC-75 (1-4X) for AH-42 (1-4X)	30 kW	C
			EHC-76 (1-4X) for AH-42 (1-4X)	31 kW	C
			Fan EB-6 (1-4X-NNS)	7.5 HP	I
			EHC-103 (1-4X) for AH-41 (1-4X)	48 kW	C
			EHC-79 (1-4X) for AH-43 (1-4X)	40 kW	C
			EHC-78 (1-4X) for AH-42 (1-4X)	25 kW	C

480-V MCC	Location	PD&MD Sheet	Description	Load	DAC-1 Status*
1-4A34	WPB El. 281'0"	213 S01/S02	EHC-88 (1-4X) for AH-68 (1-4X)	72 kW	C
			Fan AH-68 (1-4X)	7.5 HP	C
			Fan AH-41 (1-4X)	15 HP	C
			Fan AH-42 (1-4X)	40 HP	C
			Fan R-6 (1-4X)	20 HP	C
			Fan AH-43 (1-4X)	25 HP	C
			Fan AH-44 (1-4X)	25 HP	C
			Fan E-59 (1-4X)	30 HP	I
			Fan R-8 (1-4A)	60 HP	I
1-4B21	WPB El. 211'0"	233 S02	AH Unit AH-70 (1-4X)	15 HP	C
1-4B22	WPB El. 291'0"	234 S01/S02/ S03	Fan E-52 (1-4X-NNS)	10 HP	C
			Fan E-59 (1-4B-NNS)	30 HP	C/R
			Fan E-62 (1-4X-NNS)	2 HP	I
			Fan E-63 (1-4X-NNS)	2 HP	I
			AHU-79 (1-4X-NNS)	5 HP	C
			AHU-80 (1-4X-NNS)	5 HP	C
			Fan R-7 (1-4B-NNS)	40 HP	C/R
			Pump P-12 (1-4B-NNS) for EAC-6	1 HP	C/S
			Pump P-11 (1-4B-NNS) for EAC-5	1 HP	C/S
			Fan E-65 (1-4X)	5 HP	I
			Fan E-64 (1-4X)	5 HP	I
			Fan E-87 (1-4X-NNS)	3 HP	C
			Fan AH-66 (1-4X-NNS)	7.5 HP	C
			Fan AH-67 (1-4X-NNS)	7.5 HP	C
			Fan R-8 (1-4B-NNS)	60 HP	C/R
			EHC-86 (1-4X) for AH-66 (1-4X)	85 kW	C
			EHC-87 (1-4X) for AH-67 (1-4X)	68 kW	C
			Fan E-66 (1-4X)	5 HP	I
			Fan E-67 (1-4X)	2 HP	I
			Fan E-69 (1-4X)	5 HP	I
			Fan E-70 (1-4X)	5 HP	I
			Fan E-71 (1-4X)	2 HP	I
			Fan E-72 (1-4X)	2 HP	I

480-V MCC	Location	PD&MD Sheet	Description	Load	DAC-1 Status*
			Fan E-73 (1-4X)	5 HP	I
			Fan E-74 (1-4X)	5 HP	I
			Fan E-75 (1-4X)	7.5 HP	I
			Fan E-76 (1-4X)	40 HP	C
			WC-4 Refrig. Trans Pump	3 HP	C
			WC-4 Oil Pump Motor	2 HP	C
1-4B31	WPB El. 211'0"	236 S02	Fan AH-71 (1-4X)	15 HP	C
1-4B32	WPB El. 236'0"	237 S02	Fan AH-73 (1-4X)	15 HP	I

*C = Continuous, I - Intermittent, C/R = Continuous/Redundant
C/S = Continuous (Summer load only)

480-V MCC	Location	PD&MD Sheet	Description	Load	DAC-1 Status*
1-4B33	WPB El. 276'0"	238 S01/S02	EHC-50 for AH-44	29 kW	C
			EHC-53 (1-4X)	38.2 kW	C
			EHC-52 for AH-44	17 kW	C
			EHC-54 (1-4X)	40 kW	C
			Fan EB-1 (1-4X-NNS)	7.5 HP	I
			Fan EB-2 (1-4X-NNS)	7.5 HP	I
			EHC-70 (1-4X) for AH-43 (1-4X)	23 kW	C
			Fan EB-3 (1-4X-NNS)	7.5 HP	I
			EHC-69 (1-4X) for AH-43 (1-4X)	14 kW	C
			EHC-46 (1-4X) for AH-44 (1-4X)	15 kW	C
			EHC-71 (1-4X) for AH-43 (1-4X)	14 kW	C
			EHC-48 (1-4X) for AH-44 (1-4X)	15 kW	C
			EHC-49 (1-4X) for AH-44 (1-4X)	20 kW	C
			EHC-51 (1-4X) for AH-44 (1-4X)	17 kW	C
1-4B34	WPB EL. 291'0"	239 S01/S02	Fan ES-5 (1-4X-NNS)	20 HP	I
			Fan E-77 (1-4X)	3 HP	C
			Fan AH-75 (1-4X-NNS))	5 HP	C
			MOV 75W-B310-1-4	0.7 HP	I
			MOV 75W-B317-1-4	0.7 HP	I

*C = Continuous, I - Intermittent

480-V Bus Switchgear	Location	PD&MD Sheet	Description	Load	DAC-1 Status*
1-4A103	WPB	70	Fan S-61 (1-4A)	150 HP	C/R
			Fan S-62 (1-4A)	150 HP	C/R
			Fan E-45 (1-4X)	150 HP	C
			Fan E-46 (1-4X)	150 HP	C
			EHC-40 for S-61	700 kW	C
			Pump P-9	150 HP	C/R
			EHC-58 for AH-42	378 kW	C
			EHC-59 for AH-43	196.2 kW	C
			EHC-56 for AH-83	196.2 kW	C
1-4B103	WPB	71	Hot Water Heater (1-4X-NNS) (VRS) (E6)	240 kW	C
			Fan E-49 (1-4X)	150 HP	C
			Fan E-47 (1-4X)	150 HP	C
			Fan E-62 (1-4B)	150 HP	C/R
			Fan E-61 (1-4B)	150 HP	C/R
			EHC-41 for S-62	700 kW	C
			Pump P-9 (1-4B-NNS)	150 HP	C/R
			C-1 Blower (1-4B)	100 HP	C
			EHC-57 (1-4X) for AH-41	154 kW	C
			EHC-60 (1-4X) for AH-44	216 kW	C
			EHC-55 (1-4X) for AH-40	196 kW	C
1-4B2	WPB	91	Fan E-83 (1-4X-NNS)	100 HP	C/R
6.9-kV Switchgear	**Location**	**PD&MD Sheet**	**Description**	**Load**	**DAC-1 Status***
1-4A	WPB	16 16A	Chiller WC-3 (1-4X-NNS)** Chiller WC-4 (1-4X-NNS)**	925 HP 925 HP	C C

*C = Continuous, C/R = Continuous/Redundant

**Serves both FHB and WPB

2.3 Electrical (continued)

2.3.3 Non-ESF 208/120-V power is provided by the following power panels fed from their respective MCCs listed in 2.3.2:

2.3.3.1 Waste Processing Building:

PP-1-4A21-1 PP-1-4A31-1

PP-1-4A22-1 PP-1-4B31-1

PP-1-4A25-1 PP-1-4B32-1

PP-1-4A32-2

PP-1-4A33-1

PP-1-4A23-2

2.3.3.2 Fuel Handling Building:

PP-1-4A111 PP-1-4B10212

PP-1-4A10221

PP-1-4B111

2.3.3.3 120/208-volt ESF power and 125-V DC power for the FHB HVAC Systems is provided by the following panels fed from their respective MCCs:

PP-1&4A33-SA

PP-1&4B33-SB

DP-1A-SA

DP-1A-2

DP-1B-SB

PP-1-A311-SA

PP-1-B311-SB

2.3.4 Electrical power and control cables for the subject HVAC Systems are sized in accordance with SHNPP Unit 1 Electrical Design Criteria Nos. 8, 9, 17, 18, 19, 20, and 21 and calculations in accordance with DBD-202.

2.3.5 The cable and raceway system for the RAB HVAC System is in accordance with SHNPP Unit 1 Electrical Design Criteria Nos. 3 and 4 (see DBD-200).

2.3.6 In the event of a failure of normal AC power, all ESF loads will be fed from the emergency diesel generators 1A-SA and 1B-SB. Non-ESF loads can be aligned with A or B train power in the event of a failure of one train. During normal plant operation, operator discretion should be utilized such that an overload condition will not exist on these load centers.

2.4 Structural

2.4.1 The Fuel Building housing the HVAC System is a Seismic Category I structure. The structural design basis requirements are described in Design Specification CAR-1364.481S04.

2.4.2 The Waste Processing Building housing the HVAC System is a Seismic Category I structure. The structural design basis requirements are described in Design Specification CAR-1364.481S05.

2.4.3 The HVAC equipment is supported on reinforced concrete foundations that are designed in accordance with ACI Code 318-71.

The foundations for FHB equipment are detailed on Drawings CAR-2167-G-2016, -2017, -2037, -2146, -2180, -2181, -2182, -2183, -2184, and -2185.

The foundations for WPB equipment are detailed on Drawings CAR-2167-G-2423, -2424, -2463, -2464, and -2467.

2.4.4 The equipment foundations are designed in accordance with the loads furnished by the equipment manufacturer. See design calculation Books FH-544 and W-612.

2.4.5 The 28-day design compressive strength of concrete is 4000 psi in accordance with CAR-SH-CH-6.

2.4.6 The reinforcing steel is ASTM A-615 Grade 60 in accordance with CAR-SH-CH-7A.

2.4.7 The anchor bolts conform to ASTM A-307 Grade B, ASTM A-325 or ASTM A-193 Grade B-7 with nuts conforming to ASTM A-194-2H.

2.5 Material and Chemistry

2.5.1 The evaporative air coolers of the WPB Supply System are fabricated of double-wall insulated casing constructed in sections with exterior frame of 6061.T1 aluminum angles. The inside wall is minimum 20 gage thick Type 304 stainless steel and the exterior is 18 gage thick embossed aluminum. The air washer section has cellulosic fiberboard fill, and the reservoir tank is fabricated from 10 gage Type 304 stainless steel.

2.5.2 The air-handling unit casings are double-wall insulated construction with outer shell of 14 gage minimum galvanized steel and inner wall of 20 gage Type 304 stainless steel. They have a 10 gage galvanized steel floor and 0 Type 304 stainless steel drain pan.

2.5.3 The FHB Emergency Exhaust System air cleaning unit and ductwork are designed as special construction to meet the requirements of ANSI N509-1976 standard for minimum leakage. The equipment access doors which are used during inspection filter replacement and maintenance are leaktight construction.

2.5 Material and Chemistry (continued)

2.5.4 The safety-related air-handling unit cooling coils are designed and fabricated in accordance with the ASME Boiler and Pressure Vessel Code Section III. Each coil consists of Type 304 stainless steel water box and coil tracks, 90 percent copper, and 10 percent nickel tubes with copper fins. The use of corrosion-resistant materials enhance the life of the equipment, which is compatible with the environment in which it operates and the cooling water flowing through its heat exchanger.

2.5.5 The chilled water chemistry requirements are covered in the Essential and Nonessential Services Chilled Water System's DBD-132. The service water chemistry requirements associated with the WPB Ventilation System air washers makeup water are covered under Normal and Emergency Service Water DBD-128.

2.5.6 Fume hood exhaust fans and ductwork are fabricated from stainless steel to resist corrosion and chemical reactions caused by the different types of the exhaust fumes.

2.5.7 Dryer booster fans are provided with stainless steel rotor to resist corrosion caused by vapor condensation.

2.6 Failure Effects

2.6.1 The safety-related systems, which include the FHB air-handling units and the FHB Emergency Exhaust Systems, are designed with suitable redundant features to ensure the systems will remain functional in the event of a single active component failure to provide their function during design basis events.

2.6.2 In the event of a loss of off-site power, at least one of the redundant trains of the safety-related systems receives power from its respective diesel generator to perform its safety functions, assuming a single active failure.

2.6.3 In the event of a failure of the Nonsafety Instrument Air System, air-operated isolation dampers of the FHB areas fail in the closed position for the FHB Emergency Exhaust System to perform its safety function during the fuel handling accident. The portion of the system which must isolate the areas following a design basis accident are designed as Safety Class 3 and Seismic Category I.

2.6.4 Nonsafety-related systems supporting normal operation of the plant are provided with suitable standby to ensure of the continuous operation of the plant.

2.6.5 Nonsafety System equipment and components whose structural failure can affect safety-related systems are seismically supported in accordance with Seismic Category I requirements.

3.0 DESIGN MARGIN

3.1 Waste Processing Building (WB)

3.1.1 WPB General Ventilation System

The cooling safety margins for various groups of spaces served by the evaporative air coolers in conjunction with the local cooling units were determined in the Calculation 9-WPB-9, Tab "K." These margins are listed below as DTs between the design temperature of 104°F and the calculated average exhaust temperature for the following exhaust subsystems:

a)	Average exhaust temperature of spaces 100.6°F exhausted by the air cooling Units E-45, E-46, E-47, and E-49.	100.6°F	DT = (-) 3.4°F
b)	Average exhaust temperature of spaces exhausted by the Fan E-8.	99.2°F	DT = (-) 4.8°F
c)	Average exhaust temperature of spaces exhausted by the Fan E-7.	96.6°F	DT = (-) 7.4°F
d)	Average exhaust temperature of spaces exhausted by the Fan E-59.	104.0°F	DT = 0

The heating coil capacity of each evaporative air cooler has a design margin of approximately 12 percent. In addition, the heat losses through walls, floors, and ceiling were conservatively estimated with a 10 percent design margin.

Safety margins for the cooling capacities of the following local coolers were determined after revisions of the cooling loads calculations:

AH-70 and AH-71	No safety margin
AH-72 and AH-73	No safety margin
AH-74	50 percent
AH-75	25 percent
AH-79 and AH-80	15 percent
AH-77	No safety margin

3.1.2 WPB Control Room HVAC System

A 15 percent cumulative safety margin is included in actual cooling capacity.

The heating load calculations which determine the capacity of the heating coil include a safety margin of 10 percent. The actual design margin is higher since no credit was taken for the internal heat generated in the area.

3.1.3 WPB Personnel Handling Facility HVAC System

Based on the latest revised calculation (9-WPB-3, R1), a 50 percent cumulative safety margin is available in actual cooling capacity. This margin consists of a 30 percent excess in the air-handling unit capacity and a 20 percent excess in the chilled water flow. (330 gpm actual versus 276 gpm required)

The heating load calculations for the heating coil are based on a safety margin of 10 percent.

3.1.4 WPB Office and Laundry HVAC System

A 15 percent cumulative safety margin is included in the actual cooling capacity for the WPB Laundry Areas and Office Area Air Conditioning Systems. The heating load calculations for electric duct heating coils for the WPB laundry areas and office areas include design margin of 10 percent.

3.1.5 WPB Laboratory Area HVAC System

The electric duct heating coils capacity include a design margin over 10 percent. The fume hood exhaust flow rates are based on manufacturer's recommendations. The minimum face velocities of 100 fpm to 150 fpm are used which are based on guides published by American Industrial Hygiene Association and the American Conference of Governmental Industrial Hygienists. Face velocity of 150 fpm is for high toxicity usage, such as perchloric acids; and a face velocity of 100 fpm is for normal laboratory usage. A 10 percent design margin is provided in the capacity of the steam generator and humidifier.

3.1.6 WPB Instrument and Control Shop HVAC System

The heating and cooling load calculations for the WPB Instrument and Control Shop HVAC System include a 10 percent design margin.

3.1.7 The WPB Exhaust System Air Cleaning Units

Units capacity is adequate to exhaust the supplied outside air admitted to the building pressure below the atmospheric level to prevent exfiltration of contaminated air. Exhaust air total flow rate can be increased above the design value by 8 percent without exceeding the maximum power limitation of the air cleaning units.

3.2 Fuel Handling Building (FHB)

3.2.1 FHB Operating Floor Air Conditioning System

A 10 percent design margin is provided in the heating and cooling load calculations of FHB Operating Floor Air Conditioning System. The heating capacity of the electric reheat coil does not include any safety margin. The heating capacity of the electric preheat coil includes a margin of approximately 80 percent.

3.2.2 Normal Ventilation System for Areas Below Operating Floor

A 10 percent design margin is provided in the heating and cooling load calculations for the Normal Ventilation System for areas below operating floor.

The heating coil capacity of the air-handling unit includes a design margin of approximately 5 percent.

3.2.3 Emergency Exhaust System for the Operating Floor

The capacity of the Emergency Exhaust System is based on calculated leakage rate through walls, floor, ceiling, and doors. The system design flow rate is adequate to maintain the isolated areas at a negative pressure of 1/4- (per PDC 5027 inst. List) inch water during the postulated accident.

3.2.4 Spent Fuel Pool Pump Room Ventilation System

A 15 percent design margin is provided in cooling load calculations for the Spent Fuel Pool Pump Room Ventilation System

3.2.5 North H&V Room Ventilation System

The heating and cooling load calculations for the North H&V Room Ventilation System were provided with a 30 and 10 percent design margin, respectively.

3.2.6 Clothing Change Area Ventilation System

The design airflow rate for the clothing change area is based on conservative numbers of air change per hour instead of cooling load calculations. 20 air changes/hr was used for the ventilation system.

3.2.7 Cask Decontamination Area and Enclosure Ventilation System

The airflow rate for the Cask Decontamination Area and Contamination Enclosure Ventilation System is based on approximately 50 air changes per hour.

3.2.8 FHB--Switchgear Superstructure Ventilation System

The heating and cooling load calculations for the FHB Switchgear Superstructure Ventilation System were provided with a 10 percent design margin.

4.0 DOCUMENT REFERENCE LIST

4.1 Subordinate Documents

4.1.1 Drawings

a) Flow Diagram

CAR-2168-G-533S02	HVAC - Air Flow Diagram Waste Processing Building, Sheet 1 Unit 1
CAR-2168-G-533S03	HVAC - Air Flow Diagram Waste Processing Building, Sheet 2 Unit 1
CAR-2168-G-533S04	HVAC - Air Flow Diagram Waste Processing Building, Sheet 3 Unit 1
CAR-2168-G-533S05	HVAC - Air Flow Diagram Waste Processing Building, Sheet 4 Unit 1
CAR-2168-G-533S06	HVAC - Air Flow Diagram Waste Processing Building, Sheet 5 Unit 1
CAR-2168-G-533S07	HVAC - Air Flow Diagram Waste Processing Building, Sheet 6 Unit 1
*CAR-2168 G533	HVAC Air Flow Diagram - Fuel Handling Building, Unit 1 *Includes FHB - Switchgear Room Ventilation System per FCR-HV-1607

b) Physical Layout

CAR-2168-G494S01	HVAC - WPB Equipment Rooms El. 291 Sheet 1
CAR-2168-G494S02	HVAC - WPB Equipment Rooms El. 291 Sheet 2
CAR-2168-G494S03	HVAC WPB El. 291 Sheet 3
CAR-2168-G494S04	HVAC WPB Equipment Room Section & Part Plans El. 291 Sheet 4
CAR-2168-G494S05	WPB Equipment Room Section El. 291 Sheet 6
CAR-2168-G494S06	WPB Equipment Room Section and Part Plan El. 291 Sheet 6
CAR-2168-G495S01	HVAC - WPB El. 211 Sheet 1
CAR-2168-G495S02	HVAC - WPB El. 236
CAR-2168-S-9703S01	HVAC - WPB El. 236
CAR-2168-S-9703S02	HVAC - WPB El. 236
CAR-2168-S-9703S03	HVAC - WPB El. 236
CAR-2169-S-9703S04	HVAC - WPB El. 236

4.1.1 Drawings (continued)

CAR-2168-S-9703S05	HVAC - WPB El. 236
CAR-2168-S-9703S06	HVAC - WPB El. 236
CAR-2168-S-9703S07	HVAC - WPB El. 236
CAR-2168-G495S03	HVAC - WPB El. 261 Sheet 1
CAR-2168-G495S04	HVAC - WPB El. 276 Sheet 1
CAR-2168-G495S05	HVAC - WPB Control Room Part Plan Section El. 236 Sheet 2
CAR-2168-G495S06	HVAC - WPB El. 276 Sheet 2
CAR-2168-G495S07	HVAC - WPB El. 211 Sheet 2
CAR-2168-G495S08	HVAC - WPB El. 211 Sheet 3
CAR-2168-G495S09	HVAC - WPB El. 261 Sheet 2
CAR-2168-G495S010	HVAC - WPB El. 261 Sheet 3
CAR-2166-G495S011	HVAC - WPB Control Room Equipment Room Part Plan & Section El. 261 Sheet 4
CAR-2168-G516S01	HVAC - Waste Treatment Area El. 216 and 236
CAR-2168-G516S02	HVAC - Waste Treatment Area El. 261
CAR-2168-G500	HVAC Fuel Handling Building El. 216 and 236, Unit 1
CAR-2168-0501	HVAC Fuel Handling Building El. 286 Sheet 1, Unit 1
CAR-2168-G501S02	HVAC Fuel Handling Building El. 286 Sheet 2, Unit 1
CAR-2168-G502S01	HVAC Fuel Handling Building Equipment Room El. 261 Sheet 1, Unit 1
CAR-2168-G502S02	HVAC Fuel Handling Building Equipment Room Section & Part Plans El. 261 Sheet 2, Unit 1
CAR-2168-GS02S03	HVAC Fuel Handling Building Equipment Room El. 324, Unit 1
CAR-2168-G502S04	HVAC Fuel Handling Building Equipment Room El. 324, Unit 1
CAR-2168-G502S05	HVAC Fuel Handling Building Equipment Room Sections El. 324
CAR-2168-G849	HVAC Fuel Handling Building Duct Seismic Supports El. 236, Unit 1

4.1.1 Drawings (continued)

CAR-2168-0850	HVAC Fuel Handling Building Duct Seismic Supports El. 261 Sheet 1, Unit 1
CAR-2168-G851	HVAC Fuel Handling Building Duct Seismic Supports El. 261 Sheet 2, Unit 1
CAR-2168-G852	HVAC Fuel Handling Building Duct Seismic Supports El. 286, Unit 1
CAR-2168-G854	HVAC Waste Processing Building Duct Seismic Supports El. 236
CAR-2168-G874	HVAC Fuel Handling Building Duct Seismic Supports El. 305 and 324
CAR-2168-G149S01	FHB & RAB H&V Vent Stack, Sheet 1
CAR-2168-G149S02	FHB & RAB H&V Vent Stack, Sheet 2
CAR-2168-G149S03	FHB & RAB H&V Vent Stack, Sheet 3
CAR-2168-G1A1S06	WPB HVAC Vent Stack
Civil Drawings	
CAR-2167-G2423	WPB Fl. Slab 291 Equipment Fdn. M&R Sh. 1
CAR-2167-G2424	WPB Fl. Slab 291 Equipment Fdn. M&R Sh. 2
CAR-2167-G2463	WPB Fl. Slab 236 Equipment Fdn. M&R Sh. 2
CAR-2167-G2464	WPB Fl. Slab 261 Equipment Fdn. M&R Sh. 1
CAR-2167-G2467	WPB Fl. Slab 236 Equipment Fdn. M&R Sh. 3
CAR-2167-G2016	FHB Equipment Fdn. El. 216 M&R Sh. 1
CAR-2167-G2017	FHB Equipment Fdn. El. 216 M&R Sh. 2
CAR-2167-G2037	FHB Equipment Fdn. El. 305 M&R
CAR-2167-G2146	FHB Equipment Fdn. El. 286 M&R
CAR-2167-G-2180	FHB Equipment Fdn. El. 236 M&R Sh. 1
CAR-2167-G-2181	FHB Equipment Fdn. El. 236 M&R Sh. 2
CAR-2167-G-2182	FHB Equipment Fdn. El. 236 M&R Sh. 3
CAR-2167-G-2183	FHB Equipment Fdn. El. 261 M&R Sh. 1
CAR-2168-G-854	HVAC - WPB Duct Seismic Supports El. 236'

4.1.1 Drawings (continued)

CAR-2168-G-874	HVAC - FHB Duct Seismic Supports El. 324'
CAR-2167-G-2184	FHB Equipment Fdn. El. 261 M&R Sh. 2
CAR-2167-G-2185	FHB Equipment Fdn. El. 261 M&R Sh. 3

c) Instrument Schematics and Logic Diagrams

1) Waste Processing Areas Ventilation

CAR-2166-B419

Sheets 35.00, 35.10 to 35.26, 36, 36.10 to 36.25, 36.30 to 36.32, 37, 37.10 to 37.14, 38, 38.10 to 38.14

2) WPB Control Room HVAC System

CAR-2166-B419

Sheets 30, 30.10, 30.10A, 30.10B, 30.11 to 30.15, and 30.20 to 30.24

3) WPB personnel Handling Facility HVAC System

CAR-2166-B 419

Sheets 32, 32.10 to 32.15

4) WPB Office and Laundry Areas HVAC System

CAR-2166-B419

Sheets 31, 31.10 to 31.14, 31.20 to 31.24 and 31.30 to 31.38

5) WPB Laboratory Area HVAC System

CAR-2166-B419

Sheets 33, 33.10 to 33.17, 33.20 to 33.27 and 33.30 to 33.37

6) WPB Instrumentation and Control Shop HVAC System
CAR-2166-B419

Sheet 34 and 34.10 to 34.13

7) FHB Normal Supply and Exhaust Systems

CAR-21.66-B-430

Sheets 31.52A to 31.52E, 31.53A to 31.53C, 31.54A to 31.54E 31.55A to 31.55E, 31.56A to 31.56H, 31.57A to 31.57C, 31.58A to 31.58E, 31.59A to 31.59C,

4.1.1 Drawings (continued)

8) FHB Emergency Exhaust System

CAR-2166-B-430

Sheets 31.60A, 31.60B, 31.60D to 31.60H, 31.61A, 31.61B, 31.61D to 31.61H.

9) FHB Spent Fuel Pool Pump Room Ventilation System

CAR-2166-B-430

Sheets 31.62 to 31.62D and 31.63 to 31.63D.

10) FHB North H&V Room and Decon. Storage Pit Ventilation Systems

CAR-2166-B-430

Sheets 31.220 to 31.222

11) FHB Cask Decon. Area Ventilation System

CAR-2166-B-430

Sheets 31.239 to 31.239B.

12) FHB - Switchgear Superstructure Ventilation System

2166-B-401 Shts. 2928, 2929, 2930

d) Control Wiring Diagrams

1) Waste Processing Building Ventilation Systems

CAR-2166-B-401

Sheets 4776 to 4820 and 4967 to 4988, 4821 to 4830 and 4746 to 4749, 4768, 4769, 4887 to 4896, 4831 to 4861, 4864 to 4869 and 4871 to 4887, 4900 to 4911, 4914 to 4943, 4945, 4947 to 4949, 4951 to 4953, 4955 and 4956, 4960 to 4964

4753 to 4767, 4991 to 4994, 4487, 9363, 9387, 4460, 4450, 3362, 2527, 2784.

2) Fuel Handling Building Ventilation Systems

CAR-2168-B-401

Sheets 2841 to 2844, 2846 to 2853, 2855 to 2867 2869 to 2904, 2913 to 2923, 2925 to 2927, 2931 to 2939

3) FHB - Switchgear Room Ventilation System

CAR-2168-B-401

2928, 2929, 2930, 2940

4.1.1 Drawings (continued)

e) Electrical Drawings

1)	CAR-2166-G-029	Main and 6900-V Auxiliary One-Line Wiring Diagram
2)	CAR-2166-G-030	480-V Auxiliary One-Line Diagram
3)	CAR-2166-G-042S01	250-V DC, 125-V DC & 120-V Uninterruptible AC One-Line Diagram
4)	CAR-2166-G-037S01	General Services Auxiliary One-Line
5)	CAR-2166-B-041	Power Distribution and Motor Data Sheets

- Waste Processing Building Ventilation Systems

  Sheets, 70, 71, 91, 92,
  206S01, 207S01, 207S02, 209S02, 211S02, 212S01, 212S02, 213S01, 213S02, 228S01, 234S01, 234S02, 234S03, 235S02, 236S02, 238S01, 238S02, 239S01, 239S02

  605, 617, 618, 619, 620, 622, 624, 635, 638

- Fuel Handling Building Ventilation Systems

  Sheets, 68, 69, 85, 90,

  177S01, 183S01, 203S01, 204S01, 205S01, 209S0I, 227S02, 231S01, 231S02, 232S01, 232S02, 235S01, 254S01, 255S02

  613, 615, 630, 633, 650, 651, 653, 655, 674, 678

4.1.2 Specifications

a) Equipment Specifications

CAR-SH-BE-07	HVAC - Air-handling Units - Non-nuclear Safety-Related
CAR-SH-BE-08	HVAC Air-handling Units - Nuclear Safety Equipment Class 3 and Seismic Category I
CAR-SH-BE-13	HVAC - Centrifugal Fans Safety Class 3 and Seismic Category I and Non-Nuclear Safety Equipment
CAR-SH-BE-16	HVAC - Evaporative Air Coolers Non-Nuclear Safety Equipment
CAR-SH-BE-22	Electric Heating Coils Nuclear and Non-Nuclear Safety Equipment
CAR-SH-BE-23	Electric Unit Heaters Non-Nuclear Safety Equipment

4.1.2 Specifications (continued)

CAR-SH-BE-24	Louvers Non-Nuclear Safety-Related
CAR-SH-BE-25	HVAC - Dampers - Nuclear Safety and Non-Nuclear Safety Equipment
CAR-SE-BE-31	HVAC - Air Cleaning Units - Nuclear Safety and Non-Nuclear Safety Equipment
CAR-SH-BE-32	HVAC - Smoke Exhaust Pans - Non-Nuclear Safety Equipment
CAR-SH-BE-35	HVAC Butterfly Valves - Nuclear Safety and Non-Nuclear Safety-Related
CAR-SH-N-09	Laboratory Furniture Non-Nuclear Safety-Related
CAR-SH-N-44	Sampling Fume Hoods Non-Nuclear Safety-Related

b) Miscellaneous HVAC Specifications

CAR-SH-BE-04A	HVAC Ductwork
CAR-SH-BE-04B	HVAC Ductwork Insulation
CAR-SH-BE-04C	Miscellaneous HVAC Equipment
CAR-SH-BE-28	HVAC - In-Place Test of Air Cleaning Units Nuclear Safety and Non-Nuclear Safety Equipment
CAR-SH-BE-28A	HVAC - In-Place Filter Testing Nuclear Safety and Non-Nuclear Safety Equipment

c) Civil Specification

CAR-SH-AS-7	Structural Steel
CAR-SH-CH-6	Concrete
CAR-SH-CH-7A	Reinforcing Steel
CAR-1364.481S04	Fuel Handling Building
CAR-1364.481S05	Waste Process Building

d) Electrical Specifications

CAR-SH-E-6A	6.9-kV Switchgear - Non-1E
CAR-SH-E-9A	480-V Switchgear - Non-1E
CAR-SH-E-9B	480-V Switchgear - Class 1E
CAR-SH-E-10A	480-V MCC (Non-1E)
CAR-SH-E-10B	480-V MCC (1E)

4.1.2 Specifications (continued)

CAR-SH-E-11	Emergency Diesel Generator
CAR-SH-E-12	Motors for Station Auxiliary Equipment (up to 250 Hp)
CAR-SH-E-12A	Motors for Station Auxiliary Equipment (300 Hp above and 460 V)
CAR-SH-E-13B	Motors for Station Auxiliary Equipment 6900 V
CAR-SH-E-14B	Power and Control Cable
CAR-SH-E-14D	Thermocouple and Special Cables
CAR-SH-E-15	Special Cables
CAR-SH-E-17B	125-V DC Panels (1E)
CAR-SH-E-22A	120-V PP (Non-1E)
CAR-SH-E-24	Electric Process Heating Freeze Protection and Temperature Maintenance Systems

e) I&C Specification

CAR-SH-IN-37	HVAC Miscellaneous Instrumentation

4.1.3 Final Safety Analysis Report (FSAR)

Section 1.8	Conformance to NRC Regulatory Guides
Section 3.2	Classification of Structures, Components, and Systems
Section 3.8.4	Other Seismic Category I Structures
Appendix 3.11B	Environmental Parameters Zone Maps
Section 7.3.1	Engineered Safety Fractures Actuation Description
Section 7.3.2	Analysis
Section 7.5.1	Safety-Related Display Instrumentation Description
Section 7.6.2	Analysis
Section 8.3	On-site Power Systems
Section 8.3.2	DC Power System
Section 9.4.3	Auxiliary and Radwaste Area Ventilation Systems
Section 9.4.3.1.3	Waste Processing Areas Ventilation System (Design Bases)

4.1.3 Final Safety Analysis Report (FSAR) (continued)

Section 9.4.3.1.4	WPB Control Room HVAC Systems (Design Bases)
Section 9.4.3.1.5	WPB personnel Handling Facility HVAC System (Design Bases)
Section 9.4.3.1.6	WPB Office and Laundry Areas HVAC System (Design Bases)
Section 9.4.3.1.7	WPB Laboratory Areas HVAC System (Design Bases)
Section 9.4.3.1.8	WPB Instrumentation and Control Shop HVAC System (Design Bases)
Section 9.4.3.2.3	System Description - Waste Processing Areas Ventilation System
Section 9.4.3.2.4	System Description - WPB Control Room HVAC System
Section 9.4.3.2.5	System Description - WPB Personnel Handling Facility HVAC System
Section 9.4.3.2.6	System Description - WPB Office and Laundry Areas HVAC System
Section 9.4.3.2.7	System Description - WPB Laboratory Areas HVAC System
Section 9.4.3.2.8	System Description - WPB I&C Shop HVAC System
Section 9.4.3.4	Inspection and Testing Requirements
FSAR Table 9.4.3-2	Design Data for Waste Processing Areas Ventilation System
FSAR Table 9.4.3-3	Design Data for WPB Control Room HVAC System
FSAR Table 9.4.3-4	Design Data for WPB Personnel Handling Facility HVAC System
FSAR Table 9.4.3-5	Design Data for WPB Office and Laundry Areas HVAC System
FSAR Table 9.4.3-6	Design Data for WPB Laboratory Areas HVAC System
FSAR Table 9.4.3-7	Design Data for WPB Instrument and Control Shop
FSAR Figure 9.4.3-4	HVAC - Air Flow Diagram - Waste Processing Building
FSAR Figure 9.4.3-5	HVAC - Air Flow Diagram - Waste Processing Building
FSAR Figure 9.4.3-6	HVAC - Air Flow Diagram - *Waste* Processing Building

4.1.3 Final Safety Analysis Report (FSAR) (continued)

FSAR Figure 9.4.3-7	HVAC - Air Flow Diagram - Waste Processing Building
FSAR Figure 9.4.3-8	HVAC - Air Flow Diagram - Waste Processing Building
Section 9.4.2	Spent Fuel Pool Area Ventilation System
Section 9.5.1	Fire Protection System
Section 12.1	Ensuring that Occupational Radiation Exposures are as Low as Reasonably Achievable (ALARA)
Section 12.3	Radiation Protection Design Features
Section 12.5	Health Physics Program
Section 15.7.4	Design Basis Fuel Handling Accidents
Section 6.5.1.1.1	Design Bases - FHB Emergency Exhaust System
Section 6.5.1.2.1	System Design - FHB Emergency Exhaust System
Section 6.5.1.3.1	Design Evaluation - FHB Emergency Exhaust System
Section 6.5.1.4.1	Test and Inspection
Section 6.5.1.5	Instrumentation Requirements for the RAS and FHB Emergency Exhaust Systems
Section 6.5.1.6	Materials for ESP Filter Systems
FSAR Figure 9.4.2-1	HVAC - Airflow Diagram, Fuel Handling Building

4.2 Information Documents

4.2.1 Calculations

a) HVAC Cooling/Heating Load Calculations

HVAC Calc. No. 9-WPB-1	Control Room HVAC System Elev. 236' & 244'-6" served by AH-40, AH-83, ES-4, & ES-5
HVAC Calc. No. 9-WPB-2	Laundry Facility HVAC System Elev. 261' & 291' served by AH-41, E-51, AH-65, S-53, 54, 55, 56, 57 & 58, EB-1, 2, 3, 4, 5, and 6
HVAC Calc. No. 9-WPB-3	Personnel Handling Facility HVAC System Elev. 261' served by AH-42 & E-76

4.2.1 Calculations (continued)

HVAC Calc. No. 9-WPB-4	Laboratory Area HVAC System - Elev. 276' served by AH-43, AH-66, AH-67, AH-68, E-52, and E-77
HVAC Calc. No. 9-WPB-5	Office Areas HVAC System Elev. 261' & 276' served by AH-44 R-6
HVAC Calc. No. 9-WPB-6	I&C Shop HVAC System - Elev. 261' served by AH-55
HVAC Calc. No. 9-WPB-7A	Design Criteria, U-Factors, Space Area & Volume Calculations for Spaces on Elevs. 211', 236', 261', 276' & 291' served by EAC-5 & EAC-6
HVAC Calc. No. 9-WPB-7B	Cooling Load Calculations for Spaces at Elev. 211' (Col. 1-5) served by RAC-5 & RAC-6
HVAC Calc. No. 9-WPB-7C	Cooling Load Calculations for Spaces at Elev. 211' (Col. 5-12) and Pipe Tunnel at Elev. 228' & 255' served by EAC-5 & RAC-6 with supplemental cooling from AH-70 & 71
HVAC Calc. No. 9-WPB-7D	Cooling Load Calculations for Spaces at Elev. 236' (Col. 1-5) and Pipe Tunnel at Elev. 255' served by EAC-5 & EAC-6
HVAC Calc. No. 9-WPB-7E	Cooling Load Calculations for Spaces at Elev. 236' (Col. 5-12) served by EAC-5 & EAC-6
HVAC Calc. No. 9-WPB-7F	Cooling Load Calculations for Various Spaces at Elev. 261', 276' and 291' served by EAC-5 & EAC-6
HVAC Calc. No. 9-WPB-7G	Cooling Load Calculations for Spaces at Secondary Waste Treatment Area on Elev. 216', 236', & 261' served by EAC-5 & EAC-6
HVAC Calc. No. 9-WPB-7H	Cooling Load Summaries for Spaces served by EAC-5 & EAC-6 at Elev. 211', 236', 261', 276', & 291'of WPB; Elev. 216', 236', & 261' of Waste Treatment Area; Heating Load Calculations for Elevation above 261'; Equipment Selections for EAC-5, EAC-6, EHC-40, EHC-41, R-7, R-8, & E-59

4.2.1 Calculations (continued)

HVAC Calc. No. 9-WPB-7I	Equipment Selections and Sizing for WPB Exhaust Systems E-45, E-46, E-47, E-49,& E-83
HVAC Calc. No. 9-WPB-7J	Volume Reduction System on Elev. 276' & 291' served by EAC-5 & EAC-6 & AH-91
HVAC Calc. No. 9-WPB-8	Cooling Loads and Sizing of Local Coolers for Supplementary Cooling of AH-70 & 71-WPB Elev. 211'; AH-72 & 73-WPB Elev. 236'; AH-75-WPB Switchgear Rm. 1, Elev. 276'; AH-79 & 80-WPB Chiller Rm, Elev. 291'; AH-77-WTA Elev. 216'; AH-74-WTA Elev. 2361
HVAC Calc No. 9-WPB-9	Cooling Load Summaries based on latest revised piping load for spaces at Elevs. 211', 236', & 261' of WPB and spaces at 216', 236', and 261' of Waste Treatment Areas served by EAC-5 & EAC-6.
HVAC Calc. No. 9-WPB-PO	Original piping loads for Elevs. 211', 236', 276', 286', 291' of WPB and Elev. 216', 236', & 261' of WTA
HVAC Calc. No. 9-WPB-P1	Revised piping heat loss for Elev. 211'of WPB
HVAC Calc. No. 9-WPB-P2	Revised piping heat loss for Elev. 236', 245', & 247' of WPB
HVAC Calc. No. 9-WPB-P3	Revised piping heat loss for Elev. 261', 276', & 291' of WPB
HVAC Calc. No. 9-WPB-P4	Revised piping heat loss for Elev. 216', 236', & 261' of WTA
HVAC Calc. No. 9-WTA	Containment Fan Cooler Starter (1B22-SB for AH-1), WTA Area, Elev. 236' served by AH-29

4.2.1 Calculations (continued)

HVAC Calc. No. 9-FHB-1	Normal Ventilation System Elev. 216' & 236' served by AH-21 & E-14 (south) and AH-22 & E-11 (north); North H&V Room Elev. 261' served by E-15 & EUH-31; Clothes Change Area served by E-43; Decontamination Enclosure Purge System served by E-84
HVAC Calc. No. 9-FHB-2	Fuel Pools & Operating Floor Elev. 286' Ventilation System served by AH-56, AH-57, AH-58, AH-59, E-23, E-24, E-25, & E-26; Cooling Load for Decontamination Enclosure Purge System served by E-84
HVAC Calc. No. 9-FHB-3	Spent Fuel Pool Cooling Pumps & Heat Exchanger Area, Elev. 236'; Emergency Exhaust & MCC Area Elev. 261' served by AH-17
HVAC Calc. No. 9-FHB-4	FHB-Switchgear Superstructure Ventilation System, FHB Roof served by PV-23, 24, 25, and 26
HVAC Calc. No. 9-FHB-PO	Original Piping Heat Losses
HVAC Calc. No. 9-FEB-P1	Revised Piping Heat Losses
HVAC Calc. No. 9-SAC-2A	Fuel Handling Building Emergency Exhaust System, E-12 and E-13
HVAC Calc. No. 9-CHAR	Charcoal Absorber Residence Time Verification
HVAC Calc. No. 9-NSCH	Nonessential Services Chilled Water System Equipment Sizing for Chillers W-3 and W-4, Chilled Water Pumps P-9, Expansion Tank & Chemical Addition Tank
HVAC Calc. No. 9-ESCH-1	Equipment Sizing Chillers W-2, Chilled Water Pumps P-4, Condenser Water Pumps P-7, Expansion Tank Chemical Addition Tank
HVAC Calc. No. 9-AT	Duct Silencers & Acoustical Duct Lining for Fn System Nos. S-61, R-8, S-62, R-7, S-3, AH-21
HVAC Calc. No. 9-STC	RAB Stack Temperature Calculation

4.2.1 Calculations (continued)

b) HVAC System Pressure Loss Calculations

CALCULATION NO.	HVAC SYSTEM NO.
0017-HVAC	AH-17
0019-HVAC	AH-21
0021-HVAC	AH-22
0029-HVAC	AH-29
0037-HVAC	AH-40
0098-HVAC	AH-41
0086-HVAC	AH-42
0097-HVAC	AH-43
0084-HVAC	AR-44
0038-HVAC	AH-55
0039-HVAC	AH-56, AH-57
0040-HVAC	AH-58, AH-59
0102-HVAC	AH-66
0101-HVAC	AH-67
0099-HVAC	AH-68
0044-HVAC	AH-70
0045-HVAC	AH-71
0046-HVAC	AH-72
0047-HVAC	AH-73
0048-HVAC	AH-74
0103-HVAC	AH-75
0094-HVAC	AH-77
0049-HVAC	AH-79, AH-80
0037-HVAC	AH-83
0082-HVAC	S-53, S-54, S-55, S-56, S-57, S-58
0057-HVAC	S-61, S-62
0020-HVAC	E-11
0063-HVAC	E-12, E-13
0007-HVAC	E-14
0096-HVAC	B-15
0067-HVAC	E-23, 3-24
0068-HVAC	E-25, E-26
0100-HVAC	E-43
0070-HVAC	E-45, E-46, E-47, E-49
0087-HVAC	E-51
0088-HVAC	E-52
0090-HVAC	Z-59
0179-HVAC	E-62
0180-HVAC	B-63
0181-HVAC	E-64
0182-HVAC	Z-65
0183-HVAC	E-66
0184-HVAC	E-67
0185-HVAC	E-69
0186-HVAC	E-70
0187-HVAC	E-71
0188-HVAC	E-72
0189-HVAC	E-73
0190-HVAC	E-74
0191-HVAC	E-75
0072-HVAC	E-76
0091-HVAC	B-77
0093-HVAC	E-82
0104-HVAC	9-83
0116-HVAC	E-84

4.2.1 Calculations (continued)

0192-HVAC	E-87
0107-HVAC	ES-4 ES-5
0085-HVAC	R-6
0089-HVAC	R-7
0092-HVAC	R-8
0151-HVAC	EH-1
0152-HVAC	EH-2
0153-HVAC	EH-4
0154-HVAC	EH-6
0155-HVAC	EH-7
0156-HVAC	EH-8
0157-HVAC	EH-9
0175-HVAC	PV-23
0176-HVAC	PV-24
0177-HVAC	PV-25
0178-HVAC	PV-26
0129-HVAC	EB-1 THRU EB-6

c) Equivalent Fan Static Pressure & Fan Capacity Verification

CALCULATION No.

9FP-BE-04C	Misc. HVAC Equipment (inc. Smoke Exhaust Fans, Centrifugal Fans, Power Roof Ventilators, Propeller Fans, AC-Units, Air-Cooled Split System)
9FP-BE-07	Air-Handling Units (NNS) with Chilled Water Coils
9FP-BE-08	Air-Handling Units (ESF) Ducted: AH-9, 10, 12, 13, 15, 16, 17, 85, 86
9PP-BE-08D	Air-handling units (ESP) Nonducted: AH-5, 6, 7, 8, 11, 19, 20, 23, 24, 25, 26, 28, 29, 92, & 93
9FP-BE-13	Centrifugal Fans (NNS & ESP)
9FP-BE-16	Evaporative Air Coolers
9PP-BE-17	Axial Flow Fans
9PP-BE-31	Air Cleaning Units (NNS & ESF)
9FP-BE-32	Smoke Exhaust Fans
9FP-N-44	Sampling Fume Hoods Exhaust Fans
9PP-N-09	Laboratory Fume Hoods Exhaust Fans

d) Civil Calculations

9-FHB-3S	Reaction Forces - "B" Sheets for HVAC System Nos. AK-17, AH-21, AH-22, AH-56, AH-57, AH-58, AH-59, E-11, E-12, E-13, B-14, E-23, E-24, E-25, & E-26
9-WPB-1S	Reaction Forces - "B" Sheets for HVAC System Nos. E-45, E-46, E-47, & E-49

4.2.1 Calculations (continued)

FH-544	FHB - Misc. Calculations
W-612	WPB - Equipment Foundation Design

e) Electrical Calculations

DAC-1	Auxiliary System Load Study
53-MIS	Electrical Miscellaneous Heat Loss Calculation

4.2.2 Vendor, Purchase Order Number, Instruction Manual, and Fan Performance Data/Curve

Air-Handling Units-NSR	Bahnson Co.; P.O. NY-435105; AH-17 & 29 Fan Performance Data/Curve; see VM-PSL Vol. 1
Air-Handling Units-NNS	Bahnson Co.; P.O. NY-435155; AR-21, 22, 40, 41, 42, 43, 44, 55, 56, 57, 58, 59, 66, 67, 68, 70, 71, 72, 73, 74, 75, 77, 79, 80, 83, 91 (cooling coil only) Fan Performance Data/Curve; see VM-PSL Vol. 3
Evaporative Air Coolers-NNS	Bahnson Co.; P.O. NY-435151; S-61 & 62 Fan Performance Data/Curve; see VH-MXM
Centrifugal Fans-NSR & NNS	Barry Blower Co.; P.O. NY-435160; E-11, 14, 23, 24, 25, 26, 51, 52, 59, 76, 77, 82, 83, 84; S-53, 54, 55, 56, 57, 58; R-6, 7, 8, Fan Performance Data/Curve; See VM-BJD
Smoke Exhaust Fans-NNS	Barry Blower Co.; P.O. NY-435230; ES-4, 5; EB-1, 2, 3, 4, 5, 6, Fan Performance Data/Curve; see VM-BJD
Air Cleaning Units-NSR & NNS	CTI Nuclear Inc.; P.O. NY-435162; E-12, 13, and E-45, 46, 47, 49 Fan Performance Data/Curve; see Drawing Nos. 1364-49246 and 1364-49247, respectively
Sample Panel Exhaust Fans-NNS	Kewaunee-Milton Roy; P.O. NY-435252, EH-1, 2, 4, 6, 7, 8, 9 Fan Performance Data/Curve; see VM-PC
Laboratory Fume Hood Exhaust Fans-NNS	NY Blower; P.O. H-63659; E-62, 63, 64, 65, 66, 67, 69, 70, 71, 72, 73, 74, 75, 87, Fan Performance Data/Curves; see VM-500
Power Roof Ventilators-NNS	Penn Ventilator Co.;Po H-46841; PV-23, 24, 25, 26 Fan Performance Data/Curve; see VM-NRB

4.2.2 Vendor, Purchase Order Number, Instruction Manual, and Fan Performance Data/Curve (continued)

Propeller Fans-NNS	Penn Ventilator Co.; P.O. s. H-46841 & H-68427; E-43 & E-15 Fan Performance Data/Curve; see. VM-NRB
Electric Heating Coils-NSR & NNS	Brasch Mfg. Co.; P.O. NY-435152; VM-PUX
Electric Unit Heaters-NNS	Brasch Mfg. Co.; P.O. NY-435146; VM-PUX
Louvers-NNS	The Airolite Co.; P.O. NY-435169
Dampers-NSR & NNS	Ruskin Mfg. Co.; P.O. s. NY-435205 & NY-435206
Humidification System-NNS	Hydrosteam Ind. P.O. H-59889. Steam Generator SG-4, VM-RWZ; Armstrong Mach. Works, P.O. H-59891, Humidifier H-4, VM-SPQ
Water Chillers-NSR & NNS	York-Borg Warner; P.O. NY-435147
HVAC Butterfly Valves - NSR & NNS	BIF-Basis in Flow; P.O. NY-435211 435212

(NSR-Nuclear Safety-Related; NNS-Nonnuclear Safety-Related; VM-Vendor Manual No.)

4.2.3 Project Lists

CAR-1364-B-070	Piping Line List
CAR-1364-B-069	Valve and Specialties List
CAR-2166-B-432	BOP Instrument List
CAR-2166-B-434	WPB Instrument List
CAR-2166-B-508	Setpoint Document
CAR-2166-B-043	Cable and Conduit List

4.2.4 *Miscellaneous

*Only those references which are not listed under:

2.1.9 Regulatory Requirements, and

2.1.10 Safety and Health Requirements

a) DBD's List

DBD-003	HVAC Ductwork
DBD-132	Essential & Nonessential Services Chilled Water Systems
DBD-128	Normal and Emergency Service Water Systems

4.2.4 *Miscellaneous (continued)

DBD-200	Cable and Raceway Systems
DBD-202	Plant Electrical Systems

b) Electrical Design Criteria

Criteria No.	Title
#3	Cable Tray Systems - Design and Installation
#4	Conduit System Design and Installation
#8	Power Cable Ampacities
#9	Tabulation of 480-V ACB/Starter/Cable Sizes for Major Loads
#17	480-V Auxiliary System
#18	Electrical Cables Data - Permissible Control Circuit Loop Lengths - Application/B-M No./Max O.D./Weight
#19	Special Cables - Specification CAR-SH-E-15
#20	Adequacy of Safety-Related Bus Voltage
#21	208/120-Volt Class 1E Auxiliary System

c) Technical Specification

Section 3/4.9.12 Fuel Handling Building Emergency Exhaust System

d) Technical Publications and Codes

ERDA 76-21	Energy Research and Development Administration
	Design, Construction, and Testing of High-Efficiency Air Cleaning Systems for Nuclear Application
	Outdoor Air Temperature for Raleigh-Durham Airport, North Carolina, ASHRAE 1972 "Handbook of Fundamentals"
NFPA-90-A	National Fire Protection Association Standards for the Installation of Air Conditioning and Ventilation Systems

4.2.4 *Miscellaneous (continued)

e) CP&L Requirements

Based on the recommendation of the equipment manufacturers and CP&L Operation personnel, the following spaces in the WPB-Laboratory Areas HVAC System shall be maintained under the environmental conditions as listed below: (Per attachment to CP&L Letter CE-1482, dated February 3, 1984)

5.0 APPENDIX

There are no Design Input Sheets, attachments, or special exhibits as appendices for this DBD.