February 22, 2000

NOTE TO: NRC Document Control Desk
Mail Stop 0-5-D-24

FROM: Beverly Michael, Licensing Assistant, Operator Licensing and Human Performance Branch, Division of Reactor Safety, Region II

SUBJECT: OPERATOR LICENSING EXAMINATIONS ADMINISTERED AT THE NORTH ANNA POWER STATION, DOCKET NO. 50-338/99-301 AND 50-339/99-301

On April 8, 1999, Operator Licensing Examinations were administered at the referenced facility. Attached, you will find the following information for processing through NUDOCS including the NRC PDR:

Item #1 - a) Facility submitted outline and initial exam submittal, designated for distribution under RIDS Code A070.

Item #2 - Examination Report with the as given written examination attached, designated for distribution under RIDS Code IE42.

Attachments: As stated

U.S. Nuclear Regulatory Commission
North Anna Power Station
Written Examination

Applicant Information

Name:	**Region: II**
Date:	**North Anna Power Station - Units 1 & 2**
License Level: RO	**Reactor Type: Westinghouse**
Start Time:	**Finish Time:**

Instructions:

Use the answer sheets provided to document your answers. Staple this cover sheet on top of the answer sheets. The passing grade requires a final grade of at least 80.00 percent. Examination papers will be collected four hours after the examination starts.

Applicant Certification

All work done on this examination is my own. I have neither given nor received aid.

_____
Applicant's Signature

Results

Examination Value	_____ Points
Applicant's Score	_____ Points
Applicant's Grade	_____ Percent

DISTRIBUTION CODE
A070

RO Answer Key

[a] [b] [c] [d] 1. _____

[a] [b] [c] [d] 2. _____

[a] [b] [c] [d] 3. _____

[a] [b] [c] [d] 4. _____

[a] [b] [c] [d] 5. _____

[a] [b] [c] [d] 6. _____

[a] [b] [c] [d] 7. _____

[a] [b] [c] [d] 8. _____

[a] [b] [c] [d] 9. _____

[a] [b] [c] [d] 10. _____

[a] [b] [c] [d] 11. _____

[a] [b] [c] [d] 12. _____

[a] [b] [c] [d] 13. _____

[a] [b] [c] [d] 14. _____

[a] [b] [c] [d] 15. _____

[a] [b] [c] [d] 16. _____

[a] [b] [c] [d] 17. _____

[a] [b] [c] [d] 18. _____

[a] [b] [c] [d] 19. _____

[a] [b] [c] [d] 20. _____

[a] [b] [c] [d] 21. _____

[a] [b] [c] [d] 22. _____

[a] [b] [c] [d] 23. _____

[a] [b] [c] [d] 24. _____

[a] [b] [c] [d] 25. _____

[a] [b] [c] [d] 26. _____

[a] [b] [c] [d] 27. _____

[a] [b] [c] [d] 28. _____

[a] [b] [c] [d] 29. _____

[a] [b] [c] [d] 30. _____

[a] [b] [c] [d] 31. _____

[a] [b] [c] [d] 32. _____

[a] [b] [c] [d] 33. _____

[a] [b] [c] [d] 34. _____

[a] [b] [c] [d] 35. _____

[a] [b] [c] [d] 36. _____

[a] [b] [c] [d] 37. _____

[a] [b] [c] [d] 38. _____

[a] [b] [c] [d] 39. _____

[a] [b] [c] [d] 40. _____

[a] [b] [c] [d] 41. _____

[a] [b] [c] [d] 42. _____

[a] [b] [c] [d] 43. _____

[a] [b] [c] [d] 44. _____

[a] [b] [c] [d] 45. _____

[a] [b] [c] [d] 46. _____

[a] [b] [c] [d] 47. _____

[a] [b] [c] [d] 48. _____

[a] [b] [c] [d] 49. _____

[a] [b] [c] [d] 50. _____

RO Answer Key

[a] [b] [c] [d] 51. _____

[a] [b] [c] [d] 52. _____

[a] [b] [c] [d] 53. _____

[a] [b] [c] [d] 54. _____

[a] [b] [c] [d] 55. _____

[a] [b] [c] [d] 56. _____

[a] [b] [c] [d] 57. _____

[a] [b] [c] [d] 58. _____

[a] [b] [c] [d] 59. _____

[a] [b] [c] [d] 60. _____

[a] [b] [c] [d] 61. _____

[a] [b] [c] [d] 62. _____

[a] [b] [c] [d] 63. _____

[a] [b] [c] [d] 64. _____

[a] [b] [c] [d] 65. _____

[a] [b] [c] [d] 66. _____

[a] [b] [c] [d] 67. _____

[a] [b] [c] [d] 68. _____

[a] [b] [c] [d] 69. _____

[a] [b] [c] [d] 70. _____

[a] [b] [c] [d] 71. _____

[a] [b] [c] [d] 72. _____

[a] [b] [c] [d] 73. _____

[a] [b] [c] [d] 74. _____

[a] [b] [c] [d] 75. _____

[a] [b] [c] [d] 76. _____

[a] [b] [c] [d] 77. _____

[a] [b] [c] [d] 78. _____

[a] [b] [c] [d] 79. _____

[a] [b] [c] [d] 80. _____

[a] [b] [c] [d] 81. _____

[a] [b] [c] [d] 82. _____

[a] [b] [c] [d] 83. _____

[a] [b] [c] [d] 84. _____

[a] [b] [c] [d] 85. _____

[a] [b] [c] [d] 86. _____

[a] [b] [c] [d] 87. _____

[a] [b] [c] [d] 88. _____

[a] [b] [c] [d] 89. _____

[a] [b] [c] [d] 90. _____

[a] [b] [c] [d] 91. _____

[a] [b] [c] [d] 92. _____

[a] [b] [c] [d] 93. _____

[a] [b] [c] [d] 94. _____

[a] [b] [c] [d] 95. _____

[a] [b] [c] [d] 96. _____

[a] [b] [c] [d] 97. _____

[a] [b] [c] [d] 98. _____

[a] [b] [c] [d] 99. _____

[a] [b] [c] [d] 100. _____

1.
During troubleshooting on the rod control system at 100% power, a power cabinet 2BD non-urgent alarm was received. The Unit Supervisor directs the ALARM RESET push-button to be depressed, in accordance with a SNSOC approved test procedure. The Operator at the Controls mistakenly depresses the STARTUP RESET push-buttons. Which ONE of the following automatic responses is expected?

a) The reactor trip breakers will open.

b) All control rod bank low and low-low annunciators will illuminate.

c) Group B and D group step counters reset to zero steps, A and C group step counters remain at the all rods out position.

d) All IRPIs reset to zero and all rod bottom lights illuminate (actual rod position does not change).

2.
Which ONE of the following would initiate an automatic unit 2 reactor trip?

a) An overcurrent trip of the unit 2 "B" RCP with reactor power at 25% power.

b) An underfrequency condition of 49 hertz on the unit 2 "B" and "C" station service busses with unit 2 stable at 2% power.

c) With reactor power at 45%, the Reactor Operator manually secures the unit 2 "A" RCP due to high shaft vibrations.

d) The unit 2 Reactor Operator accidentally opens breaker 25A1, "A" SS alternate feeder from "A" RSST, with unit 2 at 12% power during a unit startup.

3.
Unit 1 was operating at 100% power when a loss of instrument air occurred. The crew tripped the reactor and performed 1-E-0, "Reactor Trip or Safety Injection," and 1-ES-0.1, "Reactor Trip Response."

The following conditions exist:

- All RCPs secured due to loss of component cooling water.
- Containment instrument air pressure is 0 psig.
- CRDM fans 1-HV-F-37A, E, and F are running.
- The Superintendent of Operations has approved a natural circulation cooldown.

Which ONE of the following is correct concerning the crew's subsequent procedure usage?

a) Proceed to 1-OP-3.2, "Unit Shutdown From Mode 3 to Mode 4."

b) Proceed directly to 1-ES-0.2B, Natural Circulation Cooldown without CRDM Fans."

c) Proceed to 1-ES-0.2A, "Natural Circulation Cooldown with CRDM Fans," and perform to completion.

d) Proceed to 1-ES-0.2A, "Natural Circulation Cooldown with CRDM Fans," then transition to 1-ES-0.2B, "Natural Circulation Cooldown without CRDM Fans" when directed.

4.
With a saturated mixed bed ion exchanger in service, 1-CC-TCV-106, CC return from NRHX, drifts 30% in the closed direction. Letdown temperature stabilizes at 126°F. Which ONE of the following plant responses is expected?

a) Rods step out slowly.

b) Rods step in slowly.

c) 1-CH-PCV-1145 (letdown pressure control valve) throttles open to maintain letdown pressure.

d) 1-CH-TCV-1143 (letdown IX temperature divert valve) automatically diverts letdown flow around the ion exchangers.

5.
The following conditions exist:

- Unit 1 is at 100% power.
- 1-CC-TV-116B ("B" RCP thermal barrier return) and its manual isolation valve, 1-CC-151, are closed to isolate a small thermal barrier leak on the "B" RCP.

Which ONE of the following events would allow unit 1 to continue operating for the longest period of time?

a) 1-CH-MOV-1381 (RCP seal return) closes and will not reopen; leakoff is maintained by the RV.

b) 1-CH-HCV-1186 (RCP seal injection flow) closes and will not reopen.

c) 1-CC-TV-106A (RCP "A" motor cooler CC supply) closes and will not reopen.

d) "C" RCP seal leakoff flow increases offscale high (both recorders) and the "RCP Seal Leak Hi Flow" alarm is lit.

6.
The following conditions exist on unit 1:

- Ten minutes ago a steam dump valve failed partially open at 2% power.
- The operating team has corrected the problem.
- Reactor power reached a maximum of 5.7% power range indication, currently stable at 2%.
- RCS pressure reduced to a minimum of 2175 psig and is recovering.
- RCS temperature reduced to a minimum of 543°F and is recovering.

Which ONE of the following identifies the **Tech Spec LCO** that has been exceeded?

a) TS-3.2.5, DNB parameters.

b) TS-2.1, Safety limits.

c) TS-3.1.1.5, Minimum Temperature for Criticality.

d) TS-3.4.9.1, RCS Pressure/Temperature limits (heatup/cooldown curves).

7.
During 50% steady state reactor power operation, "A" steam generator PORV fails full open. Which ONE of the following describes the operation of the control rods in response to this event?

a) Control rods would move out.

b) Control rods would not move and power would not change.

c) Control rods would not move, power would increase.

d) The rods would trip into the core due to high steam line flow SI/Rx trip.

8.
Unit 1 was at 100% power when major steam line breaks occurred on "B" and "C" S/Gs. The following conditions exist:

- "B" and "C" S/Gs were isolated IAW 1-E-2
- "B" and "C" S/Gs W/R levels are now 0%
- Hot leg temperatures are increasing

After terminating safety injection IAW 1-FR-P.1, the crew is directed to control feed flow and dump steam to stabilize hot leg temperatures.

Which ONE of the following identifies the basis for performing these actions?

a) Prevent loss of RCS subcooling.

b) Prevent RCS repressurization.

c) Prevent exceeding PRZR cooldown limits.

d) Prevent tube failures in "B" and "C" S/Gs.

9.
Which ONE of the following indications on condenser pressure recorders 1-CN-PR-101A and 101B, would require a reactor trip?

a) 5.5 inches Hg abs. with turbine power at 100%.

b) 4 inches Hg abs. with turbine power at 35%.

c) 4 inches Hg abs. with turbine power at 20%.

d) 3.5 inches Hg abs. with turbine power at 15%.

10.
The following conditions exist:

- Unit 1 is at 30% power.
- 2-IA-C-1 is tagged for PMs.
- A total loss of the switchyard occurs.
- Both unit 1 EDGs fail to reenergize the emergency busses and the crew implements 1-ECA-0.0.
- The crew is directed to "**MANUALLY** dump steam at maximum rate using S/G PORVs."

Which ONE of the following is correct concerning the **INITIAL** crew response?

a) Direct a watchstander to open the S/G PORVs using the handwheels.

b) Fail open the S/G PORVs using the keyswitches in the cable vault.

c) Open the S/G PORVs using the controllers on the benchboard.

d) Direct a watchstander to fail the IA to the S/G PORVs.

11.
With unit 1 at 100% power, 1-CH-LT-1112 (VCT level) fails low due to loss of power. Which ONE of the following is the expected plant response for this transient?

a) VCT HI/LO LEVEL alarm will actuate.

b) Automatic VCT makeup actuates.

c) 1-CH-LCV-1115A diverts letdown flow to the gas stripper.

d) Charging pump suction MOVs swap from the VCT to the RWST.

12.
A fire has been confirmed in the unit 1 Emergency Switchgear Room.

Which ONE of the following actions should be taken to extinguish the fire?

a) Locally actuate the halon bottles located in the fan room on the unit 1 end of the control room.

b) Actuate the halon pull station in the unit 1 Turbine Building basement (at the entrance to the unit 2 ESGR).

c) Rotate the key switch on the halon control panel in the unit 1 Turbine Building basement near the elevator.

d) Depress the HALON EMERGENCY SWGR ROOM ACTUATE pushbutton on the Fire Protection panel near the unit 1 control room door.

13.
During a fire in the main control room, swapover for the unit 2 station service busses failed. All unit 2 station service busses are deenergized. All emergency busses are energized by off-site power. Which ONE of the following identifies the heater capacity available at the unit 2 auxiliary shutdown panel? Assume each available heater group is providing the minimum capacity required by Tech Specs.

a) 125 KW

b) 250 KW

c) 270 KW

d) 540 KW

14.
With unit 1 at 100% power, multiple main steam line breaks occurred inside containment. Reactor trip, SI and CDA all actuated automatically. Phase B containment isolation failed to occur.

Which ONE of the following explains why the crew is directed to manually close the phase B valves?

a. Reduce the possibility of a release path from containment.

b. Reduce the heat loading on component cooling water.

c. Isolate cooling water to the RCPs, which were stopped due to loss of subcooling.

d. Isolate instrument air to prevent spurious repositioning of valves in containment.

15.
During 50% reactor power operation, which ONE of the following events would place the unit closer to a departure from nucleate boiling (DNB) condition?

a) Control group pressurizer heaters fail to maximum gating.

b) Selected 1st stage impulse pressure fails low.

c) Median/Hi select Tave fails low.

d) PRZR pressure control channel 1-RC-PT-1445 fails low.

16.
The operating team entered 1-FR-C.1. All attempts to establish high head flow were unsuccessful. Core exit thermocouples are 820°F and increasing slowly.

Which ONE of the following methods is required to respond to the core cooling challenge?

a) Enter the Severe Accident Mitigation Guidelines.

b) Open available PRZR PORVs to lower RCS pressure to the SI accumulator and LHSI injection pressures.

c) Open the PRZR and reactor head vent SOVs to vent the hard bubble and allow natural circulation to progress.

d) Depressurize all intact steam generators to 120 psig to allow RCS depressurization to the SI accumulator and LHSI injection pressures.

17.
Following a reactor trip and safety injection, indications of extensive failed fuel exist. Which ONE of the following criteria would require the operating crew to begin using conservative setpoints due to the potential unreliability of installed instrumentation?

a) RCS specific activity is 150/Ē microcuries/gm

b) Recirc spray sump level is two feet.

c) RCS subcooling indicates 20°F on ICCM.

d) Containment high range monitors indicate 1.3E+5 R/hr.

18.
With unit 1 operating at 100% power, the median Tave output fails to 578°F. If "D" bank started at 212 steps, which ONE of the following approximates how many ***seconds*** would elapse to reach the all rods out position on "D" bank indications? (Assume rod motion does not affect RCS temperature or reactor power).

a) 11.9

b) 13.7

c) 97.5

d) 112.5

19.
During recovery of a dropped rod, an urgent failure alarm is received immediately after initiating rod motion on the dropped rod. Which ONE of the following identifies the cause of this alarm?

a) Logic signals between slave and master cycler not properly coordinated.

b) Power to both the stationary and moveable coils is zero at the same time.

c) Disagreement between individual rod position indicators and group step counters.

d) The lift coils of the remaining rods in the affected bank are deenergized.

20.
During 100% power operation the RO acknowledges annunciator B-G6, "PRZ Hi Level - BU Htrs On." RCS pressure is 2203 psig and decreasing slowly. VCT level trend is decreasing slowly.

Which ONE of the following diagnoses this off normal trend?

a) Pressurizer heaters have failed to minimum output.

b) Pressurizer level detector reference leg has separated from the pressurizer.

c) 1-CH-FCV-1122, CHG FLOW CONT, failed open.

d) 1-CH-HCV-1200A, LETDOWN ORIFICE ISOL, failed closed.

21.
The attached graph gives typical RCS pressure response following a small break LOCA. Which ONE of the following identifies the cause of stable RCS pressure from time 25 minutes to 75 minutes?

a) SI flow has matched break flow.

b) All charging pumps have reached their low-pressure auto-start setpoint.

c) RCP trip criteria was met and the change in slope is indicative of static RCS pressure.

d) RCS level has decreased out of the pressurizer and surge leg. This pressure is indicative of reactor vessel head pressure.

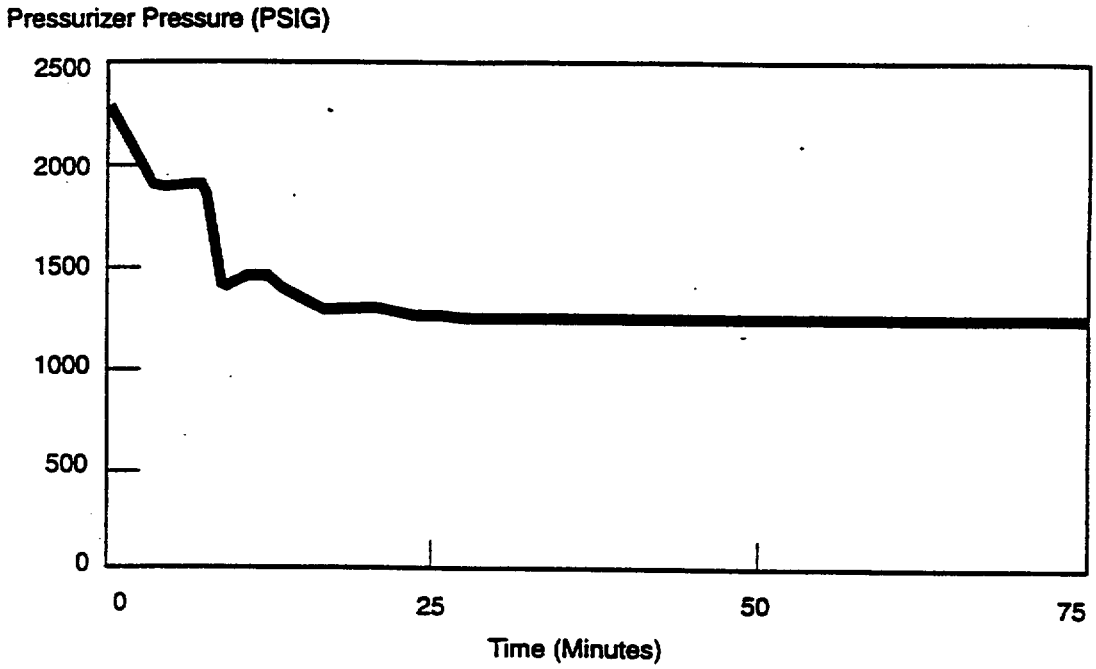

Graphics No: MT129A

22.
During a large break LOCA, a safety injection signal initiates an automatic trip of the unit's main feed pumps. Which ONE of the following identifies the purpose of this trip?

a) Ensures the differential pressure across the S/G tubesheet does not exceed the design limit.

b) Prevents S/G overfill and excessive RCS cooldown following a main steam line break accident, but does not provide any substantial benefits following a LBLOCA.

c) Minimizes the thermal stresses on S/G tubes associated with rapid RCS depressurization by minimizing the feed water injection

d) Allows the RSSTs to maintain a constant voltage profile during the accident due to additional loads on the emergency busses.

23.
The following unit 2 conditions exist:

- The unit has sustained a small break LOCA.
- The team is in 2-E-1, LOSS OF REACTOR OR SECONDARY COOLANT.
- Pressurizer pressure is stable at 1405 psig.
- Pressurizer level is off-scale low.
- RCS subcooling is 29°F.
- Containment pressure is 13 psia.

Which ONE of the following identifies the procedure which will provide long term guidance to stabilize the plant given the above RCS conditions?

a) 2-ES-1.1, SI TERMINATION.

b) 2-ES-1.2, POST LOCA COOLDOWN AND DEPRESSURIZATION.

c) 2-ES-0.2A, NATURAL CIRCULATION COOLDOWN (WITH CRDM FANS).

d) 2-ES-0.3, NATURAL CIRCULATION COOLDOWN WITH STEAM VOID IN VESSEL (WITH RVLIS).

24.
A large-break LOCA has occurred on unit 2 and transfer of the SI system to cold leg recirc mode is in progress. Which ONE of the following identifies valves that are expected to cycle **AUTOMATICALLY** during the transfer?

a) 1-SI-MOV-1885 A/B/C/D (LHSI recirculation isolation valves).

b) 1-CH-MOV-1370 (RCP seal injection).

c) 1-CH-MOV-1115 B/D (HHSI suction from the RWST).

d) 1-SI-MOV-1890C/D (LHSI cold leg injection valves).

25.
The operating team is responding to a unit 1 "A" main steam line break inside containment.
The following conditions presently exist:

- The operating team is currently performing 1-E-1, LOSS OF REACTOR OR SECONDARY COOLANT.
- "A" SG is dry with pressure <100 psig.
- "B" SG narrow range level is 20% and increasing.
- "C" SG narrow range level is 5% and increasing.
- Pressurizer level is 15% and increasing.
- Containment pressure is 18 psia and decreasing
- RCS subcooling is stable at 120°F.
- RCS pressure is 2150 psig and stable.

Which ONE of the following conditions will complete the transition criteria from 1-E-1 to 1-ES-1.1, SI TERMINATION?

a) "C" SG level increases to 14%.

b) "B" SG level increases to 25%.

c) RCS pressure increases to 2215 psig.

d) Pressurizer level increases to 22%.

26.
A Hi-Hi alarm was initiated by 1-GW-RM-101, process vent gaseous radiation monitor.

Which ONE of the following **AUTOMATIC** action(s) must be verified?

a) 1-GW-TV-106, equipment vents, closed.

b) 1-GW-FCV-101, waste gas decay tanks discharge, closed.

c) 1-GW-TV-113, liquid waste tank vents, closed.

d) 1-GW-TV-114, boron recovery tank vents, closed.

27.
The following conditions exist while RHR is in service on unit 1:

- Hot leg temperature is 232°F.
- RCS pressure is 310 psig and decreasing rapidly.
- Containment sump level is increasing.
- Containment pressure is 9.8 psia and increasing slowly.
- Pressurizer level is 19% and decreasing.
- Charging flow is at maximum.

Which ONE of the following describes the reason that safety injection control switches are NOT manually actuated in response to these conditions?

a) Avoid unnecessary actuation of containment phase A isolation.

b) SSPS fuses are pulled with the plant in this condition.

c) Avoid unnecessary start of emergency diesel generators.

d) Prevent RCS overpressurization.

Deleted ABS 5/12/99

28.
Which ONE of the following indication(s) in conjunction with power range nuclear instruments provides **ALLOWABLE** assurance that a reactor trip has occurred?

a) Annunciator D-A4 "Turbine Tripped Reactor Trip" backlit red.

b) Reactor trip breakers and bypass breakers indicating lights illuminated green.

c) All individual rod position indicators at 0 steps with rod bottom lights NOT lit.

d) Annunciator E-D4 "AMSAC Initiated" illuminated white.

29.
During 70% power operation intermediate range nuclear instrument N-36 fails low. Which ONE of the following actions is **REQUIRED** in response to this event?

a) Enter an "Info Action" and submit a work request.

b) Reduce power to less than 10%.

c) Perform E-0, REACTOR TRIP OR SAFETY INJECTION, due to an automatic reactor trip.

d) Remove the instrument power fuses.

30.
The following plant conditions exist on unit 1:

- 35% power, ramp to full power in progress.
- Annunciator K-G6, "N-16 RAD DET," actuates.
- "B" S/G N-16 monitor indicates 55 gpd and increasing.
- MS header N-16 monitor indicates 65 gpd and increasing.
- The N-16 monitor readings were stable until 10 minutes ago.
- Air ejector R/M is unchanged since last logs.
- Charging flow rate has not changed.

Which ONE of the following is correct concerning the crew's response to these indications?

a) N-16 monitors cannot be used to confirm S/G leakage below 50% power; perform 1-AR-K-G6 and 1-AP-5 and monitor redundant indications.

b) Tube leakage in "B" S/G exceeds the reactor trip criteria in 1-AP-24, trip the reactor and perform 1-E-0, "Reactor Trip or Safety Injection."

c) Tube leakage in "B" S/G is "confirmed" by MS header N-16 and "B" S/G N-16 readings, perform 1-AR-K-G6, 1-AP-5 and 1-AP-24.

d) Tube leakage in "B" S/G exceeds the TS-3.4.6.3 limits, initiate a unit shutdown using 1-OP-2.2, "Unit Power Operation From Mode 1 to Mode 2."

31.
The following conditions exist on unit 1:

- 75% power.
- "B" MFW pump has just been placed in PULL-TO-LOCK for tagout (seal leak repairs) and an operator is in the 307' switchgear racking out the breakers.
- "C" MFW pump trips due to loss of lube oil pressure
- MFW suction pressure is 340 psig

Which ONE of the following is correct concerning the crew's response to this event?

a) Immediately start "B" MFW pump.

b) Start an additional condensate pump.

c) Trip the reactor and turbine and go to 1-E-0, "Reactor Trip or Safety Injection."

d) Reduce power to less than 55% at 5%/minute using 1-AP-2.2, "Fast Load Reduction."

32.
Unit 1 is at 300°F with a stable 30°F/hr heatup in progress for the last 4 hours. The following conditions also exist:

- Feedwater to all S/Gs is secured.
- For the last 30 minutes "A" S/G narrow range level has increased from 35% to 55%.
- Prior to this, "A" S/G narrow range level was stable at 35%.
- "B" and "C" S/Gs have been steady at 35% throughout the heatup.

Which ONE of the following events would produce the indicated parameters?

a) Small steam break on "A" S/G.

b) Tube leak on "A" S/G.

c) Feed line break on "B" and "C" S/Gs.

d) Variable leg leak on "A" S/G.

33.
The following conditions exist on unit 1:

- The crew is responding to a loss of heat sink.
- "B" and "C" S/G wide range levels are 20%.
- "A" S/G wide range level is 10%.
- Containment pressure is 18 psia.
- Containment radiation is normal.

Which ONE of the following lists the proper order of priority of cooling restoration directed by 1-FR-H.1, RESPONSE TO LOSS OF SECONDARY HEAT SINK?

a) AFW, MFW, Condensate, bleed and feed, Fire Protection/Service Water.

b) MFW, AFW, Condensate, bleed and feed, Fire Protection/Service Water.

c) Bleed and feed, Fire Protection/Service Water, AFW, MFW, Condensate.

d) AFW, MFW, Condensate, Fire Protection/Service Water, bleed and feed.

34.
During a steam generator tube leak event, Health Physics determines that secondary coolant activity and unit 1 Turbine Building sump activity is $2X10^{-5}$ microcuries/ml . Which ONE of the following provides the required course of action per 1-AP-24, Steam Generator Tube Leak?

a) Leave the water in the Turbine Building sump to allow radioactive decay.

b) Turn the sump pumps off and hang blue tags on the control switches.

c) Use condensate to dilute the sump to acceptable release values.

d) Pump the Turbine Building sump to the demin sump.

35.
The following conditions exist on unit 1:

- Core onload is in progress.
- Annunciator E-C6, "Spent Fuel Pit Lo Level," comes in.
- Containment sump pumping frequency begins to increase.
- Manipulator crane R/M high and high-high alarms come in.

Which ONE of the following immediate operator actions is required?

a) Secure containment purge to isolate possible release paths.

b) Return any fuel assemblies in the cavity to the reactor vessel.

c) Place the fuel in a safe location and then evacuate the containment.

d) Mobilize the containment closure team to set refueling containment integrity.

36.
The following conditions exist on unit 1:

- 100% power operation
- PRZR LEVEL CHANNEL DEFEAT switch is in the 461/460 position
- PRZR level channel II fails low.

Which ONE of the following identifies the unit response with no operator action?

a) Charging pump suction swaps to the RWST.

b) Charging flow decreases to minimum (appx. 25 gpm).

c) Pressurizer B/U heaters all turn on.

d) PZR HI LEVEL alarm eventually actuates.

37. (Reference provided)
The following events occurred on unit 2:

- Unit 2 was at 100% power when a SI/CDA occurred due to a large break LOCA.
- Four minutes following the CDA signal the "B" RSST locked out.
- The corresponding EDG auto started and loaded on the emergency bus as required.
- Assume it is now 18 seconds after the EDG loaded on the emergency bus.
- All the loads listed below currently are NOT running.

Which ONE of the following loads has **NOT sequenced properly** onto the emergency bus affected by the "B" RSST lockout?

a) "A" quench spray pump.

b) "B" service water pump.

c) "A" motor driven AFW pump.

d) "B" quench spray pump.

38.
Assuming that the unit 1 service air compressor (1-SA-C-1) is tagged out, which ONE of the following identifies the automatic system response to a trip of the unit 2 service air compressor (2-SA-C-1)?

a) 2-IA-TV-211, Turbine Building IA dryer bypass valve, opens to supply air to both units instrument air systems.

b) The standby instrument air compressor will start and all instrument air loads will be supplied by the two instrument air compressors.

c) The standby instrument air compressor will start but instrument air pressure will continue to decrease without service air backup, requiring a reactor trip.

d) The standby instrument air compressor will start and load continuously; the running compressor will load and unload to supply all instrument air loads.

39.
Unit 1 is operating at 100% power with rod control in MANUAL due to hunting. The RO observes that inward rod motion exists.

Which ONE of the following identifies the required response to this transient?

a) Verify a proper temperature mismatch exists for the given rod speed.

b) Place rods in AUTOMATIC and verify rod motion stopped.

c) Trip unit 1 reactor and perform 1-E-0, "Reactor Trip or Safety Injection."

d) Place rods in AUTOMATIC, then back to MANUAL and verify rod motion stopped.

40.
The following conditions exist on Unit 2:

- A large steam line break has occurred inside containment.
- The team is performing 2-E-0, REACTOR TRIP OR SAFETY INJECTION.
- "B" SG pressure is 100 psig and decreasing slowly.
- RCS pressure is 1725 psig and slowly recovering.
- RCS temperature is 501°F and decreasing slowly.
- Containment pressure peaked at 32 psia and is now 22 psia.
- Total safety injection flow is 420 gpm.

Which ONE of the following identifies the desired status of the reactor coolant pumps?

a) Leave running to ensure even mixing of the injected RWST water.

b) Secure due to the status of RCS subcooling.

c) Secure due to the status of RCP motor cooling.

d) Leave running because RCS conditions are not conducive for natural circulation flow.

41.
Assume a typical reactor startup is in progress. 1/M plot data is as follows:

- At 98 steps on "C" bank, source range counts were 800 cps (N-31 reading highest).
- At 143 steps on "C" bank, N-31 indicated 1300 cps.
- At 188 steps on "C" bank, N-31 indicated 2500 cps.

Using the attached 1/M plot, which ONE of the following gives the current projected "D" bank critical rod height?

a) 102 steps.

b) 108 steps.

c) 156 steps.

d) >228 steps.

ATTACHMENT 4

(Page 1 of 1)

1/M PLOT

Criticality is projected to occur at the point that an extrapolated line drawn between the last two 1/M points crosses the 0.0 axis.

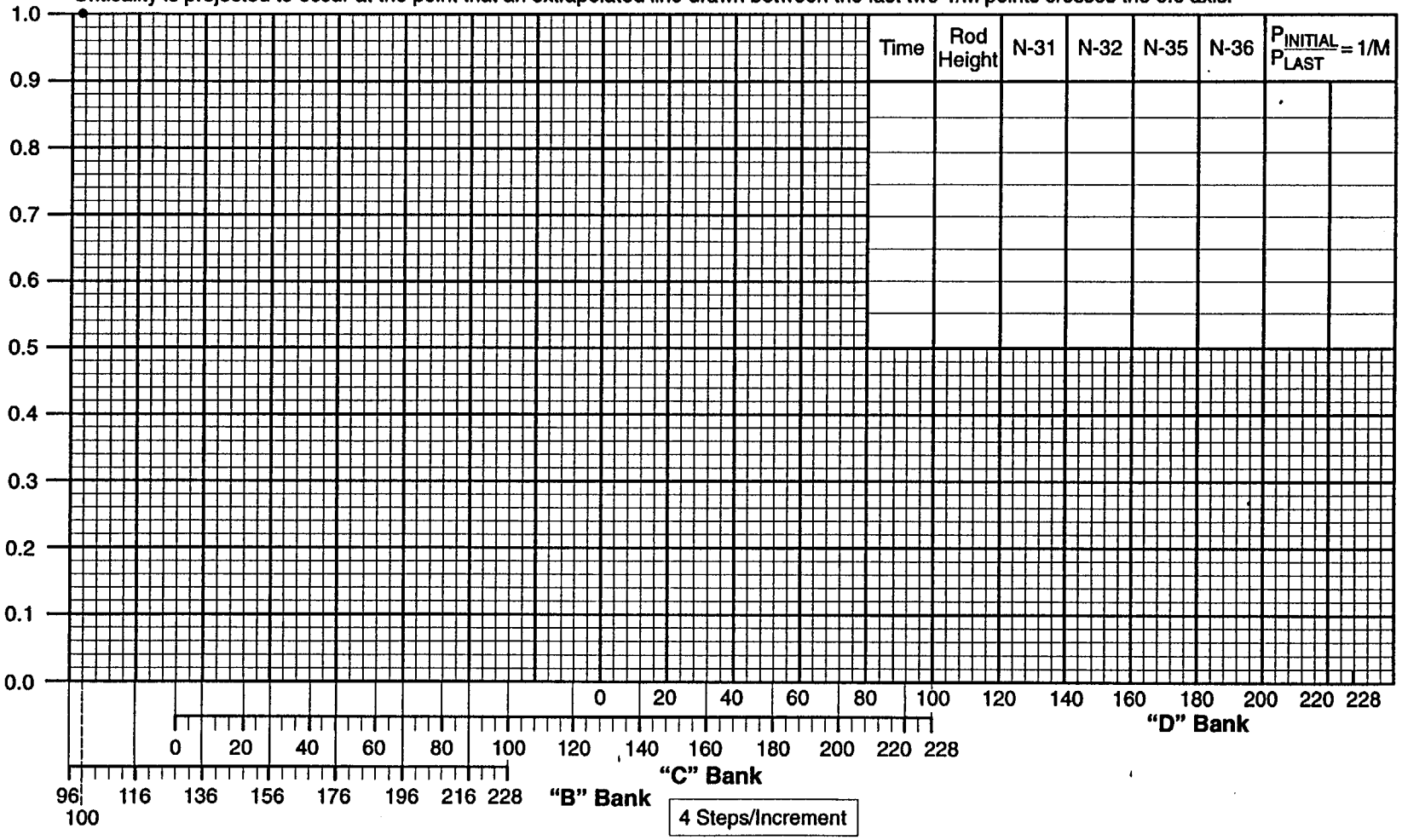

Time	Rod Height	N-31	N-32	N-35	N-36	$\frac{P_{INITIAL}}{P_{LAST}} = 1/M$	

Graphics No: BP531C

42.
Which ONE of the following is **NOT** a function provided by the Chemical and Volume Control System?

a) Purify spent fuel pit water.

b) Makeup to spent fuel pit.

c) RCS solid plant pressure control.

d) RCS inventory control during mid-loop operations.

43.
Which ONE of the following conditions would result in automatic initiation of main steamline isolation?

a) Containment pressure protection channel I fails high with channel II failed and in TEST.

b) Containment pressure protection channel II fails high with channel III failed and in TEST.

c) Containment pressure protection channel I fails high with channel III failed and in TEST.

d) Loss of power to the "A" and "B" train ESF slave relay cabinets.

44.
Using the attached in-core flux map for reference, which ONE of the following identifies the cause of the large perturbation at point "A"?

a) Region of high fuel enrichment.

b) Region of low fuel enrichment.

c) Region of partial core boiling.

d) Grid strap location.

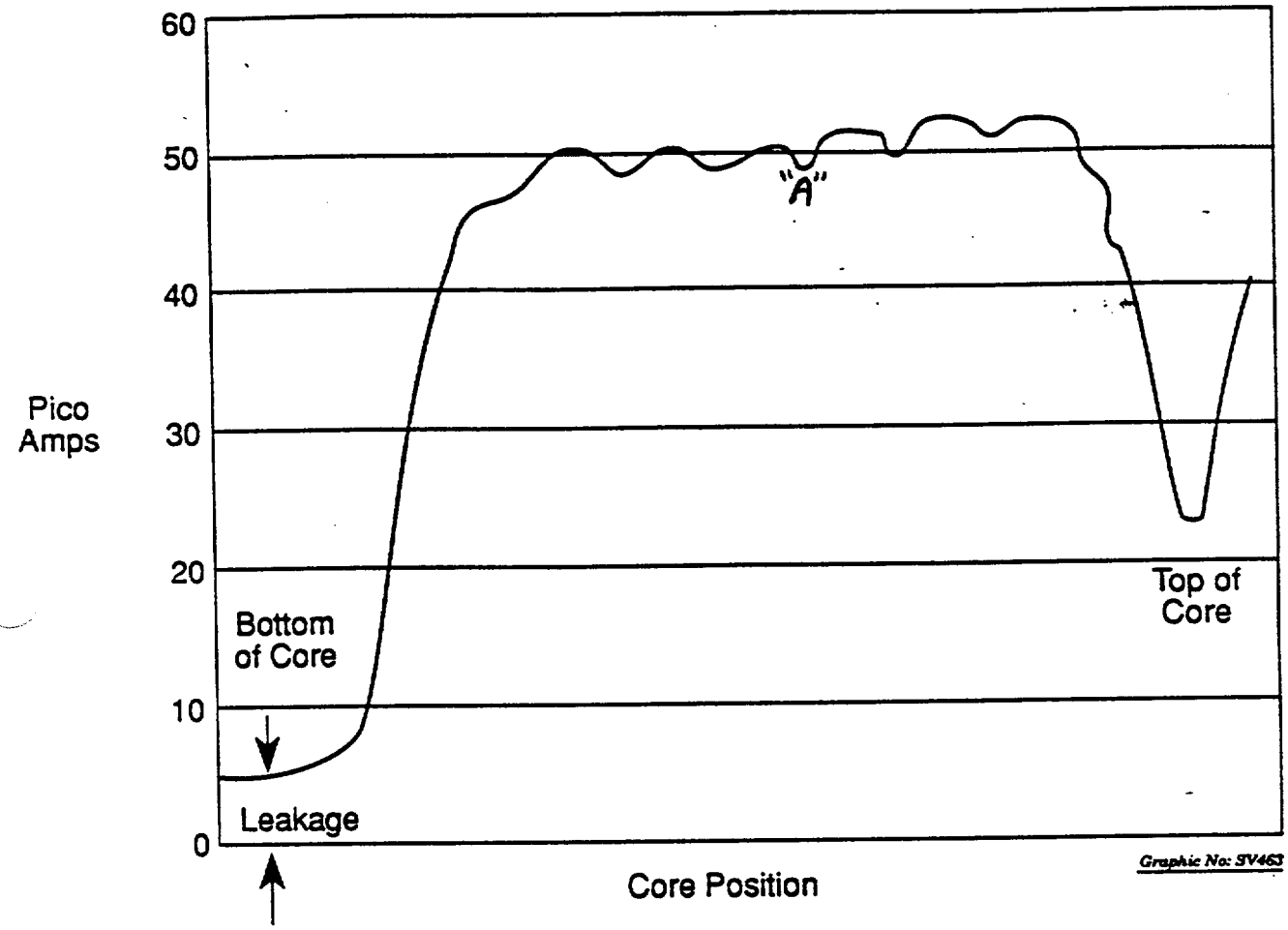

GAMMA RESPONSE TRACE

45.
With the unit at 100% power, a control rod is suspected of partially dropping into the core. Currently the control rod indicates approximately 40 steps by individual rod position indication. This control rod is located adjacent to power range nuclear instrument N-44. Which ONE of the following selections is correct concerning diagnosis of the mispositioned rod?

a) The N-44 benchboard meter reads higher than the other three due to lower localized temperatures in the RCS.

b) All power range nuclear instruments will read slightly lower than pre-event values due to negative reactivity insertion.

c) NEGATIVE RATE TRIP bistable status light on N-44 illuminated due to high localized power reduction.

d) N-44 delta flux indicates more positive due to flux shift to a higher enriched region of the core.

46.
Which ONE of the following is correct concerning the power supply arrangement to the containment air recirc fans?

a) "A" – 1A 480V bus; "B" – 1B 480V bus; "C" 1C 480V bus.

b) "A" – 1H1 480V bus; "B" 1J1 480V bus; "C" – 1H 480V bus.

c) "A" – 1A 480V bus; "B" – 1B 480V bus; "C" either 1A or 1B 480V bus.

d) "A" – 1H1 480V bus; "B" – 1J1 480V bus; "C" – either 1H or 1J 480V bus.

47.
The following conditions exist on unit 1:

- 100% power operation.
- Maintenance has been completed on "B" condensate pump.
- All tags on "B" condensate pump have been cleared and the MOP is completed.
- The crew is preparing to place "B" condensate pump in service per 1-OP-30.1.
- "B" condensate pump is still in PULL-TO-LOCK.
- "A" condensate pump trips and annunciator F-B6, "Main Fd Pps Suct Hdr Lo Press," illuminates.

Which ONE of the following is correct concerning the crew's response to this event?

a) Start "B" condensate pump.

b) Trip the reactor and perform the immediate operator actions of 1-E-0.

c) Enter 1-AP-2.2 and reduce turbine load until feedwater pump suction pressure is adequate.

d) Reduce turbine load until feedwater pump suction pressure is adequate.

48.
During 20% power operation, selected first stage impulse pressure transmitter 1-MS-PT-446 fails low. Which ONE of the following identifies the effect on the steam generator level control system?

a) Steam generator levels decrease to 33%.

b) Steam generator levels increase to 44%.

c) Steam generator levels remain at 44%.

d) Steam generator levels remain at 33%.

49.
Which ONE of the following identifies the purpose of isolating AFW to a faulted S/G?

a) Minimize thermal stresses on the S/G tubes.

b) Minimize RCS cooldown.

c) Prevent underfeeding the intact S/Gs.

d) Minimize AFW pump runout.

50. (Reference provided)
Following a unit 1 reactor trip from 100% power, the following conditions exist:

- 1-FW-P-2 started and tripped on overspeed
- Main FW pumps are aligned as they were prior to the trip
- Total AFW flow to "B" and "C" S/Gs is 400 gpm
- "A" S/G wide-range level is decreasing
- All S/Gs are off-scale low on narrow-range indicators

Which ONE of the following is correct concerning restoration of Main FW in accordance with 1-ES-0.1, "Reactor Trip Response?"

a) Main FW flow to "A" S/G must not be established until step 14.

b) Main FW flow to "A" S/G should be established at step 3.c using the FRV B/P.

c) Main FW flow to "A" S/G should be established at step 1.d (RNO) using the FRV B/P.

d) Main FW flow to "A" S/G may be established only after a motor-driven AFW pump is aligned to feed "A" S/G.

51.
Which ONE of the following tanks **CANNOT** be aligned to pump **DIRECTLY** to the high-level liquid waste tanks?

a) Contaminated drain tanks.

b) Fluid waste treatment tank.

c) Low level liquid waste tanks.

d) Primary drains transfer tank.

52.
During performance of unit 1 core off-load, the following conditions exist:

- Fuel Building ventilation is in configuration "B"
- 1-RMS-RM-153, Fuel pit bridge high and high-high alarms come in.
- 1-RMS-RM-152, New fuel storage area high and high-high alarms come in.

Which ONE of the following response(s) is expected?

a) No automatic actions occur; after two minutes the crew should manually dump MCR bottled air and ensure MCR ventilation isolation.

b) No automatic actions occur; after two minutes the crew should place the Fuel Building exhaust through the Auxiliary Building iodine filters.

c) Following a two minute time delay, Fuel Building exhaust automatically swaps to discharge through the Auxiliary Building iodine filters.

d) Following a two minute time delay, MCR bottled air dumps, MCR supply and exhaust dampers close, and MCR emergency vent fans start.

53.
With the unit stable at 345°F, which ONE of the following failures would initiate an "ICCM Trouble Train A" alarm?

a) "C" loop wide range pressure transmitter 1-RC-PT-1402 fails low.

b) "A" loop wide range pressure transmitter 1-RC-PT-1403 fails high.

c) "A" loop wide range Th fails as is.

d) "C" loop wide range Th fails high.

54.
The following conditions exist with unit 2 at 100% power:

- The crew entered 1-AP-16 and is evaluating unit conditions using step 2 (RNO).
- Pressurizer level is 49% and decreasing.
- VCT level is 25% and decreasing with makeup in progress.
- Letdown flow is 0 gpm.
- Charging flow is at maximum with one charging pump running.
- Annunciators E-F8, Valve Pit Sump Hi/Hi-Hi Level, A-C1, Sfgds Area Sump Hi/Hi-Hi Level, and A-C4, Area Ambient Air Temp High are all illuminated.
- Containment and Auxiliary Building sump levels are normal.

Upon transition from E-0, REACTOR TRIP OR SAFETY INJECTION, which ONE of the following procedural flowpaths is the team expected to use to mitigate this event?

a) ES-0.1, REACTOR TRIP RESPONSE to OPs for cooldown.

b) E-1, LOSS OF REACTOR OR SECONDARY COOLANT to ECA-1.1, LOSS OF EMERGENCY COOLANT RECIRCULATION.

c) ECA-1.2, LOCA OUTSIDE CONTAINMENT, to E-1, LOSS OF REACTOR OR SECONDARY COOLANT.

d) E-1, LOSS OF REACTOR OR SECONDARY COOLANT, to ES-1.2, POST-LOCA COOLDOWN AND DEPRESSURIZATION.

55.
Which ONE of the following identifies the basis for securing the low head safety injection pumps if RCS pressure is greater than 225 psig following a safety injection?

a) Prevent pump overheating.

b) Reduce emergency diesel generator loading.

c) Prevent heating RWST water above Tech Spec limits.

d) Reduce discharge of RWST water to safeguards sump.

56.
Unit 1 is at 100% power with the following conditions:

- PZR pressure protection channel I failed low on the previous shift and was placed in trip.
- PZR pressure protection channel II, fails high.

Which ONE of the following describes the plant response to these conditions?

a) High pressure reactor trip.

b) PZR PORV 1-RC-PCV-1456 opens.

c) Channel II OTDT activates.

d) PZR PORV automatic opening is blocked.

57.
Which ONE of the following identifies a potential cause of a reduction in pressurizer heater capability?

a) Loss of MCC 1J1-1.

b) SI/CDA load shed actuation.

c) 1-CH-LCV-1460A **OR** 1460B, letdown isolation, closed.

d) PZR level protection channel I, fails low with PZR Level Channel Defeat switch in the 459/460 position.

58.
The following conditions exist on unit 1:

- Stable at 30% power.
- P-250 plant computer has failed and attempts to bootstrap were unsuccessful.
- Applicable steps of 1-AP-42 were performed and the unit 1 PCS is aligned for augmented surveillance.

Which ONE of the following will generate a "CMPTR ALARM PR TILT ROD DEV/SEQ" annunciator?

a) QPTR exceeds 1.02.

b) QPTR exceeds 1.09.

c) "C" bank step counters indicate 129 and "D" bank step counters indicate 1.

d) "D" bank rod F-10 IRPI indicates 130 steps with "D" bank step counters at 155 steps.

59.
Unit 1 is at 100% power when annunciator B-E1, Rx Ves Flge Leakoff Hi Temp, actuates. Which ONE of the following indications would you use to confirm that reactor vessel flange leakage has increased?

a) Increasing PRT level.

b) Increasing containment sump level.

c) Increasing PDTT pumping rate.

d) Increasing VCT level.

60.
Aside from providing flow to the quench spray rings, which ONE of the following identifies a function of the quench spray pumps?

a) Cool the ORS pump recirculation flow to aid NPSH.

b) Provide water to the IRS pump suction.

c) Provide flow to one half of each recirculation spray ring.

d) During outages, provide rapid RWST temperature reduction.

61.
Which ONE of the following components MUST be in service during refueling operations to allow containment purge to remain in operation?

a) At least one containment air recirculation fan.

b) Manipulator crane radiation monitor AND containment area radiation monitor.

c) Manipulator crane radiation monitor OR containment area radiation monitor.

d) At least one containment purge supply fan.

62.
Which ONE of the following design features prevents a loss of spent fuel pool level if a SFP cooling system leak develops?

a) Suction weir and cooling pump discharge check valves both located 20 feet above the fuel.

b) Suction weir located 20 feet above the fuel and cooling pump low suction pressure trip/lockout.

c) Return line siphon breaker and cooling pump discharge check valves both located 20 feet above the fuel.

d) Suction weir and return line siphon breaker both located 20 feet above the fuel.

63.
Given the following conditions:

- A small-break LOCA occurred
- RCPs were tripped as required by EOPs
- RCS pressure is 1650 psig
- Wide-range Tcs are 508°F and slowly decreasing
- Wide-range Ths are 525°F and slowly decreasing
- CETCs are 535°F and stable
- S/G narrow-range levels are approximately 15%
- S/G pressures are 715 psig and slowly decreasing
- Containment radiation peaked at 120,000 R/hr and is now 30,000 R/hr
- Containment pressure peaked at 22 psia and is now 15 psia

In accordance with 1-ES-1.2, Post-LOCA Cooldown and Depressurization, the requirements for natural circulation:

a) are not met, since CETCs are not decreasing.

b) are not met, since there is inadequate subcooling.

c) are not met, since S/G parameters are not satisfied.

d) are met.

64.
During 100% power operation, channel III first stage pressure transmitter (1-MS-PT-446) fails low. Which ONE of the following describes how the steam dump system will operate?

a) The dumps are armed.

b) The steam dump system will be unaffected during a load reject.

c) The steam dumps will modulate closed properly following a unit trip.

d) The dumps will fully open until closed by P-12.

65.
The following conditions exist on unit 1:

- Unit is at 100% power.
- Air ejector radiation monitor 1-RM-SV-121 indication spiked, actuating the high and high-high alarms.
- 1-RM-SV-121 indicating meter has returned to normal.
- No other indications of primary to secondary leakage exist.

Which ONE of the following is correct concerning the air ejector discharge flow path alignment?

a) When the operator manually resets the high-high alarm, the air ejector discharge will automatically realign to the vent stack.

b) When the operator manually resets the high alarm, the air ejector discharge will automatically realign to the vent stack.

c) The high alarm will automatically reset when the indication returns to normal, and the air ejector discharge will automatically realign to the vent stack.

d) The high-high alarm will automatically reset when the indication returns to normal, and the air ejector discharge will automatically realign to the vent stack.

66. (Reference provided)
The following conditions exist:

- Both units are at 100% power with no equipment out of service (except as stated below).
- Unit 1 service water pumps are running.
- Unit 2 "B" charging pump is tagged for seal maintenance.
- "B" RSST feeder breaker spuriously trips (no electrical fault exists).

The SRO directs you to perform the 0-AP-10 attachment to configure EDG loads to prevent overloading. Which ONE of the following describes the required pump manipulations?

a) Start 2-SW-P-1B, stop 1-SW-P-1A (optional).

b) Start 2-SW-P-1A, stop 1-SW-P-1B (optional), place 2-CH-P-1A in PULL-TO-LOCK.

c) Start 2-SW-P-1A, stop 1-SW-P-1B (optional), start 2-CH-P-1A.

d) Start 2-SW-P-1B, stop 1-SW-P-1A (optional), stop 2-CH-P-1A and return to AUTO.

67.
During performance of 2-ES-0.1, the Reactor Operator notes AFW pump 2-FW-P-3A has the following parameters indicated:

- 49 amps on the benchboard meter.
- Red, green and amber lights above the 2-FW-P-3A control switch are NOT lit.
- The breaker indicating light bulbs are verified NOT burned out.
- 2-FW-HCV-200C was reduced to zero demand IAW 2-ES-0.1.
- No unexpected annunciators are lit.

Which ONE of the following identifies the cause of the control switch lights being extinguished?

a) Loss of 2-III DC bus.

b) Breaker closing power is lost.

c) Breaker tripping power is lost.

d) LOCAL-REMOTE switch for 2-FW-P-3A in LOCAL.

68.
A periodic test of 1H EDG is in progress with the diesel in parallel with offsite power. During the test, an earthquake initiates a loss of the switchyard and lockout of all RSSTs, followed a minute later by a large-break LOCA.

Which ONE of the following is correct concerning how QS and AFW pumps will be loaded on 1H emergency bus?

a) "A" QS pump starts after 15-second time delay on CDA; "A" AFW pump starts after 25 second time delay on loss of 2/2 RSSTs.

b) "A" QS pump starts after 15-second time delay on CDA; "A" AFW pump starts after 20-second time delay on SI.

c) "A" QS pump starts with no time delay on CDA; "A" AFW pump starts with no time delay on loss of 2/2 RSSTs.

d) "A" QS pump starts with no time delay on CDA; "A" AFW pump starts after 20-second time delay on SI.

69.
A 20 foot length of piping filled with radioactive fluid has a dose rate of 8 REM/hr at 6 feet.
Which ONE of the following approximates the dose rate at 4 feet?

a) 18 REM/hr

b) 16 REM/hr

c) 14 REM/hr

d) 12 REM/hr

70.
The following conditions exist on unit 1:

- Unit is at 100% power.
- Annunciators D-F8/D-G8, Cond Tube Clean Pit Hi /Hi-Hi Level alarms actuate.
- The Turbine Building operator reports flooding in the basement.
- Annunciator D-G7, Turb Bldg Flood Alarm Trouble actuates.

Which ONE of the following is correct concerning the plant response to these conditions?

a) Turbine flooding signal will trip all CW pumps; turbine trips due to loss of condenser vacuum.

b) Turbine flooding signal will trip the turbine directly and also trips all CW pumps.

c) Turbine flooding signal only actuates the alarm; operator action is required to trip CW pumps and turbine.

d) Turbine flooding signal will trip the reactor directly and also trips all CW pumps.

71.
The following conditions exist:

- 1-SA-C-1 was running in HAND.
- 2-SA-C-1 was started in HAND to allow placing 1-SA-C-1 in standby.
- The Operator at the Controls depressed the 1-SA-C-1 AUTO button, then depressed the OFF button associated with the HAND button.
- Service air pressure is unchanged at 115 psig.

Which ONE of the following is correct concerning the resulting operation of 1-SA-C-1?

a) Compressor will unload approximately 20 minutes after the OFF button is depressed and will run indefinitely.

b) Compressor will unload immediately and stop approximately 20 minutes after the OFF button is depressed.

c) Compressor will unload and stop immediately after the OFF button is depressed.

d) Compressor will unload immediately after the OFF button is depressed and will run indefinitely.

72.
Which ONE of the following conditions would initiate a start of diesel-driven fire pump, 1-FP-P-2?

a) 1-FP-P-2 control switch placed in TEST.

b) Fire main pressure drops to 85 psig with 1-FP-P-2 control switch in AUTO.

c) The lube oil conditioner deluge valve opens during testing with the deluge manually isolated.

d) Breaker 25H8, 4160V-480V transformer feeder, opens with 1-FP-P-2 control switch in AUTO.

73.
During solid plant conditions with RHR in service, containment instrument air is lost due to inadvertent closing of 1-IA TV-102A. Which ONE of the following identifies the RCS response?

a) Pressure increases, temperature decreases.

b) Pressure increases, temperature increases.

c) Pressure decreases, temperature decreases.

d) Pressure decreases, temperature increases.

74.
Following a reactor trip from 100% power , RCS median Tave is 567°F.
Which ONE of the following describes the position of the steam dump valves?

a) All dumps tripped open.

b) Banks 1 and 2 valves tripped open; bank 3 valves 50% open; bank 4 valves closed.

c) Banks 1, 2 and 3 valves tripped open; bank 4 valves 50% open.

d) Banks 1, 2 and 3 valves tripped open; bank 4 valves closed.

75.
During 100% power operation, all cooling water to the containment air recirculation fans is lost. As a result, the ACTUAL partial pressure will eventually _____, and the INDICATED partial pressure will _____.

a) decrease; decrease

b) decrease; increase

c) increase; increase

d) increase; decrease

76.
During 100% power operation on unit 2, the "B" containment air recirculation fan trips. Local investigations reveal the autotrip indicator (white button) extended on the fan's power supply breaker.

Which ONE of the following actions is required to remedy the situation?

a) Rotate the control switch to PULL-TO-LOCK to reset the 86 device; one restart attempt from the MCR is allowed.

b) Have the operator locally reset the breaker (with SRO concurrence), restart the fan locally at the breaker.

c) Have the operator locally reset the breaker (with SRO concurrence), restart the fan from the MCR; one restart attempt from the MCR is allowed.

d) The Electricians MUST investigate prior to restart.

77.
The following conditions exist:

- At 1400, PT-446, first stage impulse pressure channel III, failed low.
- At 1410:30, all three main feed regulating valves failed closed.
- At 1411, the Reactor Operator manually tripped the reactor.
- Current time is 1414, steam generator levels are 34% wide range level.

Which ONE of the following AMSAC system indicators is consistent with given unit conditions?

a) Annunciator E-D4, AMSAC INITIATED, lit.

b) Annunciator A-F8, AMSAC ARMED, lit.

c) Annunciator A-F5, AMSAC TRBL, lit.

d) Permissive status light P-H7, AMSAC OPERATIONAL BYPASS, lit.

78.
The following plant conditions exist:

- RCS heatup is in progress following a forced maintenance outage
- RCS pressure is 300 psig.
- RCS temperature is 220°F.
- PZR level begins to decrease rapidly.
- Containment sump level is noted to be increasing.
- The Reactor Operator increases charging flow and isolates letdown.
- PZR level is stabilized at 30% (remained on scale throughout the event).
- Charging flow is 200 gpm.

Which ONE of the following procedures will guide the crew's actions from this point?

a) AP-16, Increasing Primary Plant Leakage.

b) AP-17, Shutdown LOCA.

c) AP-11, Loss of RHR.

d) E-0, Reactor Trip or Safety Injection.

79.
Which ONE of the following identifies an **OFF-NORMAL** parameter concerning reactor coolant pump operation at 100% power?

a) "B" RCP seal injection flow indicates 7.7 gpm.

b) "B" RCP thermal barrier CC return flow indicates 42 gpm.

c) #1 seal D/P indicates 180 psid.

d) #1 seal leakoff flow indicates 3.4 gpm.

80.
Which ONE of the following personnel monitoring devices detects both beta and gamma to determine whole body exposure?

a) Digital alarming dosimeter.

b) Self-reading pocket dosimeter.

c) Thermo-luminescent dosimeter.

d) RO2 monitor with the detector window closed.

81.
A large-break LOCA occurred on unit 1 and all automatic actions have occurred.

Which ONE of the following identifies the status of the recirc spray heat exchanger service water supply valves (1-SW-MOV-103A/B/C/D)?

a) Fully open, indicate full open.

b) Fully open, indicate mid-position.

c) Open to throttled position, indicate full open.

d) Open to throttled position, indicate mid-position.

82.
The following plant conditions exist:

- Plant S/U and ramp in power in progress
- Power level is currently 5%
- At this time, compensating voltage fails high on Nuclear Instrument N-35, Intermediate Range detector.

Which ONE of the following will occur?

a) Automatic reactor trip.

b) Slight decrease on N-35 IR amps.

c) Slight increase on N-35 IR amps.

d) No observable effect on N-35 IR amps.

83.
During 100% power operation, PRT in-leakage is identified as increased. Which ONE of the following identifies a possible source?

a) Reactor vessel head vent valve leakage.

b) RCP seal return relief valve leakage.

c) RCS loop stop valve stem leakoff.

d) RCP #2 seal leakoff.

84.
The following conditions exist on unit 1:

- Unit is at 98% power during a ramp to full power.
- Turbine load control is in IMP-IN.
- The red VALVE POS LIMIT light is lit.
- Turbine first stage impulse pressure channel 1-MS-PT-132 fails low.

Which ONE of the following is correct concerning the plant's response to this failure?

a) Governor valves #4 and #1 will open to increase turbine load.

b) Governor valves will remain stationary.

c) Governor valves #2 and #3 will open to increase turbine load.

d) Throttle valves #4 and #1 will open to increase turbine load.

85.
Following a transition from 1-E-0 to 1-E-1 the STA reports the following:

- An orange path on core cooling
- A red path on containment
- An orange path on subcriticality
- A red path on integrity

Which ONE of the following identifies the procedure that is required to be implemented?

a) 1-FR-C.2

b) 1-FR-Z.1

c) 1-FR-S.1

d) 1-FR-P.1

86.
Which ONE of the following items is NOT required to be performed by the relieving Control Room Operator prior to assuming the watch?

a) Verify control board recorders rotating and inking properly.

b) Review the shift orders.

c) Review the instrument out of service log.

d) Check if the "RWST Below Norm" alarm is clear.

87.
Which ONE of the following identifies the purpose of ensuring RCS pressure is less than 2335 psig during performance of FR-S.1, RESPONSE TO NUCLEAR POWER GENERATION/ATWS?

a) Prevents immediate RCS bleed and feed to restore adequate heat sink.

b) Ensure adequate boration delivery to the core.

c) Prevents unacceptable reactivity void coefficients.

d) Ensures that the RCS remains below all Tech Spec safety limit thresholds.

88.
Health Physics has requested you to start the iodine removal fans (1-HV-F-3A/B). With the control switch placed in the A-B position, which ONE of the following is correct concerning the operation of the fans?

a) The A and B fans will both run continuously.

b) The A fan will be running and the B fan will be in auto-standby.

c) The A and B fans will run alternately as determined by run time with one fan in the lead and the other in backup.

d) The A and B fans will run alternately as determined by filter D/P with one fan in the lead and the other in backup.

89.
The following conditions exist on unit 1:

- A reactor startup is in progress.
- Control bank "C" is at 76 steps.
- Source range counts have stabilized after the second doubling.
- The latest 1/M plot indicates criticality is projected at 110 steps on "C" bank.

Which ONE of the following actions is required of the control room team?

a) Suspend the 1/M plot and pull rods to criticality.

b) Insert all control banks to zero steps and review the ECP calculation.

c) Borate ≥ 10 gpm and insert all control banks to zero steps.

d) Insert all control banks and rack out the MG set supply breakers.

Deleted ASB 5/12/99

90.
Which ONE of the following is correct concerning the plant/crew response to removing a first point feedwater heater from service with the unit at 100% power?

a) Reactor power will increase; the crew will have to reduce power to maintain within limits.

b) Reactor power will decrease; the crew will have to raise power to maintain 100%.

c) RCS temperature will increase; the crew will have to reduce temperature to maintain within limits.

d) RCS temperature will decrease; the crew will allow temperature to remain below program until the FW heater is returned to service.

91.
Which ONE of the following is correct concerning methods for limiting the probability of AFW pump runout?

a) A restricting orifice is installed in each pump's discharge piping.

b) A restricting orifice is installed downstream of 1-FW-MOV-100D, AFW to "A" S/G.

c) A throttled manual valve is located on the discharge of each AFW pump.

d) AFW flow is throttled to the minimum required as soon as possible following auto-start of AFW.

92.
Following declaration of a Site Area Emergency, the on-shift fire team members will initially do which ONE of the following?

a) Report to the OSC and respond as directed by the OSC director.

b) Report to the MCR and respond as directed by the Station Emergency Manager.

c) Report to the TSC and respond as directed by the Station Emergency Manager.

d) Report to the LEOF and respond as directed by the Recovery Manager.

93.
During a steam break on unit 1, the Operator at the Controls is unable to close the "A" MSTV using the safeguards panel pushbuttons. He immediately attempts the "FIRE EMERG CLOSE" control switch on the benchboard, but this also fails.

Which ONE of the following identifies another location at which closure can be attempted?

a) Unit 1 auxiliary shutdown panel.

b) Unit 1 appendix-R isolation panel.

c) Unit 2 appendix-R isolation panel.

d) Key switch panel in U-1 cable vault.

94.
During a large break LOCA, CDA fails to actuate automatically OR manually.

Which ONE of the following actions is performed to ensure the **DESIGN FUNCTION** of the containment depressurization actuation is met?

a) Secure all three reactor coolant pumps.

b) Start and align the quench spray pumps.

c) Secure all three containment air recirculation fans.

d) Secure the "A" containment instrument air compressor.

95.
Which ONE of the following identifies how a loss of 48VDC from SSPS affects the operation of the associated reactor trip breaker?

a) The shunt coil will deenergize.

b) The shunt coil will energize.

c) The UV coil will deenergize.

d) The UV coil will energize.

96.
Which ONE of the following identifies a difference between unit 1 and unit 2?

a) Unit 1 train "B" emergency loads are normally powered from "A" RSST; unit 2 train "A" emergency loads are normally powered from "B" RSST.

b) Common radiation monitors are powered from unit 1 train "B" (1J1-1) or unit 2 train "A" (2H1-1).

c) Unit 1 all rods out is currently 225 steps; unit 2 is currently 227 steps.

d) The turbine-driven AFW pump exhaust radiation monitor for unit 1 is located **outside** the pumphouse; for unit 2, it is located **inside** the pumphouse.

97.
During a declared "GENERAL EMERGENCY" you volunteer to perform an action to minimize equipment damage. During the pre-job brief, you are informed you will exceed your normal exposure limits.

Which ONE of the following individuals can approve use of emergency exposure limits?

a) Radiological Assessment Director.

b) Radiological Assessment Coordinator.

c) Emergency Operations Director.

d) Station Emergency Manager.

98.
Both units are at 100% power with no equipment out of service (except as noted below).

Which ONE of the following events would initiate an automatic start of the SBO diesel?

a) With "B" RSST out of service, a loss of 34.5 KV bus #4 occurs.

b) With "C" RSST out of service, a loss of 34.5 KV bus #3 occurs.

c) With "A" RSST out of service, a loss of 34.5 KV bus #3 occurs.

d) Spurious trip of breaker 15F1, "F" transfer bus supply.

99.
Which set of procedure's immediate actions are required to be performed in order?

a) FR-S.1, ECA-0.0

b) ECA-0.0, E-0

c) E-0, FR-S.1

d) ECA-0.0, E-0, FR-S.1

100. (Reference provided)
The following conditions exist on unit 1:

- Unit is in mode 5.
- "B" RHR pump is in service and "A" RHR pump is available.
- Both RHR heat exchangers are in service with 500 gpm CC flow through each H/X.
- The instrument air supply pipe to 1-CC-TV-103B, RHR CC return, is accidentally broken off.

Which ONE of the following is correct concerning the response to these conditions?

a) RHR pump seal cooling is lost to **BOTH** RHR pumps; flow can be restored by closing 1-CC-MOV-100B.

b) RHR pump seal cooling is lost to "B" RHR pump **ONLY**; flow can be restored by closing 1-CC-MOV-100B.

c) RHR pump seal cooling is lost to **BOTH** RHR pumps; flow cannot be restored unless 1-CC-TV-103B is opened.

d) RHR pump seal cooling is lost to "B" RHR pump **ONLY**; flow cannot be restored unless 1-CC-TV-103B is opened.

TABLE 4.8-1

LIST OF LOAD SEQUENCING TIMERS AND DESIGN SETPOINTS
"H" BUS

TIMER IDENTIFICATION	SET POINT (SECONDS)	INITIATING SIGNAL[1]	TOLERANCE (SECONDS)
2FWEA01-62	20	SI	±1.00
2FWEA01-62A	25	LOP	±1.25
2SWEA03-62	10	LOP	±0.50
2RSOA01-62B	35	LOP	±1.75
2RSOA01-62A	210	CDA	±21.0
2CCPA01-62Y	15	LOP	±0.75
2CCPA01-62X	20	LOP	±1.00
2RSIA01-62A	20	LOP	±1.00
2RSIA01-62	195	CDA	±9.75
2QSSA01-62A	15	LOP	±0.75
2HVRA03-62	30	LOP	±1.50
2HVRA04-62	10	LOP	±0.50
2HVRB04-62	10	LOP	±0.50
2HVRC04-62	10	LOP	±0.50
2ENSH06-62A	15	LOP	±0.75
2SWSA35-62A2A	15	SI	±1.50
2SWSA35-62B2A	15	SI	±1.50

TABLE 4.8-1 (Continued)

LIST OF LOAD SEQUENCING TIMERS AND DESIGN SETPOINTS
"J" BUS

TIMER IDENTIFICATION	SET POINT (SECONDS)	INITIATING[1] SIGNAL	TOLERANCE (SECONDS)
2FWEB01-62	20	SI	±1.00
2FWEB01-62A	25	LOP	±1.25
2SWEB03-62	10	LOP	±0.50
2RSOB01-62B	35	LOP	±1.75
2RSOB01-62A	210	CDA	±21.0
2CCPB01-62Y	15	LOP	±0.75
2CCPB01-62X	20	LOP	±1.00
2RSIB01-62A	20	LOP	±1.00
2RSIB01-62	195	CDA	±9.75
2QSSB01-62A	15	LOP	±0.75
2HVRB03-62	30	LOP	±1.50
2HVRD04-62	10	LOP	±0.50
2HVRE04-62	10	LOP	±0.50
2HVRF04-62	10	LOP	±0.50
2ENSJ06-62A	15	LOP	±0.75
2SWSB35-62A2B	15	SI	±1.50
2SWSB35-62B2B	15	SI	±1.50

(1) SI - Safety Injection
LOP - Loss of Offsite Power
CDA - Containment Depressurization Actuation

VIRGINIA POWER
NORTH ANNA POWER STATION
EMERGENCY PROCEDURE

NUMBER	PROCEDURE TITLE	REVISION
1-ES-0.1	REACTOR TRIP RESPONSE (WITH THREE ATTACHMENTS)	18
		PAGE 1 of 17

PURPOSE

To provide instructions to stabilize and control the plant following a Reactor Trip without a Safety Injection.

ENTRY CONDITIONS

This procedure is entered from:

- 1-E-0. REACTOR TRIP OR SAFETY INJECTION.

LEVEL 3 CONTROLLED COPY

RECOMMENDED APPROVAL: RECOMMENDED APPROVAL - ON FILE	DATE	EFFECTIVE DATE 4-29-98
APPROVAL: APPROVAL - ON FILE	DATE	

CONTINUOUS ACTION PAGE FOR 1-ES-0.1

1. ADVERSE CONTAINMENT CRITERIA
   IF either of the following conditions exist, THEN use setpoints in brackets:
   - 20 psia Containment pressure, OR
   - Containment radiation has reached or exceeded 10^5 R/hr (70% on High Range Recorder).

2. SI ACTUATION CRITERIA
   IF either condition listed below occurs OR an SI Actuation occurs, THEN manually initiate both trains of SI AND GO TO 1-E-0, REACTOR TRIP OR SAFETY INJECTION, STEP 1:
   - RCS subcooling based on Core Exit TCs - LESS THAN 25°F [75°F], OR
   - PRZR level - CANNOT BE MAINTAINED GREATER THAN 11% [40%].

3. ECST LEVEL CRITERIA
   WHEN the ECST level decreases to 40%, THEN initiate 1-AP-22.5, LOSS OF EMERGENCY CONDENSATE STORAGE TANK 1-CN-TK-1.

4. RCS TEMPERATURE CRITERIA
   WHEN RCS temperature is less than 547°F AND decreasing, THEN do the following:

   a) Stop dumping steam.

   b) Adjust total AFW flow to 400 gpm (340 gpm with RCPs OFF) until at least one SG narrow range level is greater than 11%.

   c) IF cooldown continues, THEN close the following:
      - MSTVs
      - MSTV Bypass Valves
      - SG Blowdown Trip Valves

5. PRZR SPRAY ISOLATION CRITERIA
   WHEN an RCP is stopped, THEN isolate PRZR spray from the stopped RCP.

STEP	ACTION/EXPECTED RESPONSE	RESPONSE NOT OBTAINED

* *

CAUTION: An Operator should be sent to locally close and lock 1-CH-217, PG to Blender Isolation Valve.

* *

NOTE: If AFW flow is less than 400 gpm (340 gpm with RCPs off) because of Operator action, then AFW flow may not need to be adjusted in Step 1c.

1.__ VERIFY TOTAL FEED FLOW TO SGs:

a) Verify AFW - IN SERVICE	a) Control feed flow to maintain narrow range levels between 20% and 33%. GO TO Step 2.
b) Verify Main Feed Reg Bypass Valves - CLOSED	b) Manually close valves.
c) Adjust total AFW flow to 400 gpm (340 gpm with RCPs OFF)	
d) Verify all SG wide range levels are increasing	d) IF any SG wide range level is not increasing, THEN increase feed flow to the affected SG.

CONTINUOUS ACTION PAGE FOR 1-ES-0.1

1. ADVERSE CONTAINMENT CRITERIA
   IF either of the following conditions exist, THEN use setpoints in brackets:
   - 20 psia Containment pressure, OR
   - Containment radiation has reached or exceeded 10^5 R/hr (70% on High Range Recorder).

2. SI ACTUATION CRITERIA
   IF either condition listed below occurs OR an SI Actuation occurs, THEN manually initiate both trains of SI AND GO TO 1-E-0, REACTOR TRIP OR SAFETY INJECTION, STEP 1:
   - RCS subcooling based on Core Exit TCs - LESS THAN 25°F [75°F], OR
   - PRZR level - CANNOT BE MAINTAINED GREATER THAN 11% [40%].

3. ECST LEVEL CRITERIA
   WHEN the ECST level decreases to 40%, THEN initiate 1-AP-22.5, LOSS OF EMERGENCY CONDENSATE STORAGE TANK 1-CN-TK-1.

4. RCS TEMPERATURE CRITERIA
   WHEN RCS temperature is less than 547°F AND decreasing, THEN do the following:

   a) Stop dumping steam.

   b) Adjust total AFW flow to 400 gpm (340 gpm with RCPs OFF) until at least one SG narrow range level is greater than 11%.

   c) IF cooldown continues, THEN close the following:
      - MSTVs
      - MSTV Bypass Valves
      - SG Blowdown Trip Valves

5. PRZR SPRAY ISOLATION CRITERIA
   WHEN an RCP is stopped, THEN isolate PRZR spray from the stopped RCP.

STEP	ACTION/EXPECTED RESPONSE	RESPONSE NOT OBTAINED
* 2.__	CHECK RCS AVERAGE TEMPERATURE: • STABLE AT 547°F OR • TRENDING TO 547°F	IF temperature is less than 547°F AND decreasing, THEN: a) Stop dumping steam. b) Adjust total AFW flow to 400 gpm (340 gpm with RCPs OFF) until at least one SG narrow range level is greater than 11%. c) IF cooldown continues, THEN close the following: • MSTVs • MSTV Bypass Valves • SG Blowdown Trip Valves IF temperature is greater than 547°F AND increasing, THEN: a) Do the following: • Dump steam to the Condenser OR • Dump steam using SG PORVs OR • Dump steam using Decay Heat Release Valve: 1) Locally open 1-MS-20, Decay Heat Release Valve Upstream Isolation Valve. 2) Manually open 1-MS-HCV-104, Decay Heat Release Valve. b) Control feed flow to maintain narrow range levels between 20% and 33%.

CONTINUOUS ACTION PAGE FOR 1-ES-0.1

1. ADVERSE CONTAINMENT CRITERIA
   IF either of the following conditions exist, THEN use setpoints in brackets:
   - 20 psia Containment pressure, OR
   - Containment radiation has reached or exceeded 10^5 R/hr (70% on High Range Recorder).

2. SI ACTUATION CRITERIA
   IF either condition listed below occurs OR an SI Actuation occurs, THEN manually initiate both trains of SI AND GO TO 1-E-0, REACTOR TRIP OR SAFETY INJECTION, STEP 1:
   - RCS subcooling based on Core Exit TCs - LESS THAN 25°F [75°F], OR
   - PRZR level - CANNOT BE MAINTAINED GREATER THAN 11% [40%].

3. ECST LEVEL CRITERIA
   WHEN the ECST level decreases to 40%, THEN initiate 1-AP-22.5, LOSS OF EMERGENCY CONDENSATE STORAGE TANK 1-CN-TK-1.

4. RCS TEMPERATURE CRITERIA
   WHEN RCS temperature is less than 547°F AND decreasing, THEN do the following:

   a) Stop dumping steam.

   b) Adjust total AFW flow to 400 gpm (340 gpm with RCPs OFF) until at least one SG narrow range level is greater than 11%.

   c) IF cooldown continues, THEN close the following:
      - MSTVs
      - MSTV Bypass Valves
      - SG Blowdown Trip Valves

5. PRZR SPRAY ISOLATION CRITERIA
   WHEN an RCP is stopped, THEN isolate PRZR spray from the stopped RCP.

STEP	ACTION/EXPECTED RESPONSE	RESPONSE NOT OBTAINED

NOTE:
- When AFW is in service, then AFW is the preferred source of feed to SGs.
- If AFW is in service, then feed flow on Main Feed Bypass Valves should not be established until Step 14.
- If an SG HI-HI Level has occurred, then Main Feed Reg Bypass Valves will not reopen until the HI-HI level has cleared and FW Bypass Isolation has been reset.

3.__	CHECK FEEDWATER STATUS:	
	a) Check RCS average temperature - LESS THAN 554°F	a) WHEN temperature is less than 554°F, THEN do Steps 3b and 3c. Continue with Step 4.
	b) Verify Main Feed Reg Valves - CLOSED	b) Manually close valves.
	c) Verify total feed flow to SGs: • Total AFW flow - GREATER THAN OR EQUAL TO 400 GPM (340 GPM WITH RCPs OFF) OR • Main Feedwater flow to at least one SG - GREATER THAN 0.7×10^6 LBM/HR	c) Establish feed flow to the SGs as necessary: • AFW OR • Main Feedwater on bypass.
4.__	VERIFY ADEQUATE HP TURBINE GLAND STEAM PRESSURE ON 1-MS-PI-131	Throttle 1-MS-MOV-106, GLAND STEAM DUMP BYPASS VALVE.

CONTINUOUS ACTION PAGE FOR 1-ES-0.1

1. ADVERSE CONTAINMENT CRITERIA
   IF either of the following conditions exist, THEN use setpoints in brackets:
   - 20 psia Containment pressure, OR
   - Containment radiation has reached or exceeded 10^5 R/hr (70% on High Range Recorder).

2. SI ACTUATION CRITERIA
   IF either condition listed below occurs OR an SI Actuation occurs, THEN manually initiate both trains of SI AND GO TO 1-E-0, REACTOR TRIP OR SAFETY INJECTION, STEP 1:
   - RCS subcooling based on Core Exit TCs - LESS THAN 25°F [75°F], OR
   - PRZR level - CANNOT BE MAINTAINED GREATER THAN 11% [40%].

3. ECST LEVEL CRITERIA
   WHEN the ECST level decreases to 40%, THEN initiate 1-AP-22.5, LOSS OF EMERGENCY CONDENSATE STORAGE TANK 1-CN-TK-1.

4. RCS TEMPERATURE CRITERIA
   WHEN RCS temperature is less than 547°F AND decreasing, THEN do the following:

   a) Stop dumping steam.

   b) Adjust total AFW flow to 400 gpm (340 gpm with RCPs OFF) until at least one SG narrow range level is greater than 11%.

   c) IF cooldown continues, THEN close the following:
      - MSTVs
      - MSTV Bypass Valves
      - SG Blowdown Trip Valves

5. PRZR SPRAY ISOLATION CRITERIA
   WHEN an RCP is stopped, THEN isolate PRZR spray from the stopped RCP.

STEP	ACTION/EXPECTED RESPONSE	RESPONSE NOT OBTAINED
5.__	ALIGNED MSR VENTS TO MAIN CONDENSER: a) Open MSR Vent To Condenser Valves: • 1-SV-TV-101A • 1-SV-TV-101B • 1-SV-TV-101C • 1-SV-TV-101D b) Close MSR Vent To 1st Pt Htr Valves: • 1-SV-TV-100A • 1-SV-TV-100B • 1-SV-TV-100C • 1-SV-TV-100D	
6.__	CHECK PRZR LEVEL CONTROL: a) Level - GREATER THAN 15%	a) Do the following: 1) Verify letdown isolation. IF letdown is NOT isolated, THEN manually isolate. 2) Verify PRZR Heaters are off. IF PRZR Heaters are NOT off, THEN put heaters in PTL.

(STEP 6 CONTINUED ON NEXT PAGE)

CONTINUOUS ACTION PAGE FOR 1-ES-0.1

1. ADVERSE CONTAINMENT CRITERIA
   IF either of the following conditions exist, THEN use setpoints in brackets:
   - 20 psia Containment pressure, OR
   - Containment radiation has reached or exceeded 10^5 R/hr (70% on High Range Recorder).

2. SI ACTUATION CRITERIA
   IF either condition listed below occurs OR an SI Actuation occurs, THEN manually initiate both trains of SI AND GO TO 1-E-0, REACTOR TRIP OR SAFETY INJECTION, STEP 1:
   - RCS subcooling based on Core Exit TCs - LESS THAN 25°F [75°F], OR
   - PRZR level - CANNOT BE MAINTAINED GREATER THAN 11% [40%].

3. ECST LEVEL CRITERIA
   WHEN the ECST level decreases to 40%, THEN initiate 1-AP-22.5, LOSS OF EMERGENCY CONDENSATE STORAGE TANK 1-CN-TK-1.

4. RCS TEMPERATURE CRITERIA
   WHEN RCS temperature is less than 547°F AND decreasing, THEN do the following:

   a) Stop dumping steam.

   b) Adjust total AFW flow to 400 gpm (340 gpm with RCPs OFF) until at least one SG narrow range level is greater than 11%.

   c) IF cooldown continues, THEN close the following:
      - MSTVs
      - MSTV Bypass Valves
      - SG Blowdown Trip Valves

5. PRZR SPRAY ISOLATION CRITERIA
   WHEN an RCP is stopped, THEN isolate PRZR spray from the stopped RCP.

STEP	ACTION/EXPECTED RESPONSE	RESPONSE NOT OBTAINED
6.	CHECK PRZR LEVEL CONTROL (Continued):	
	b) Verify charging - IN SERVICE	b) Establish charging: 1) Put controller for 1-CH-FCV-1122 in MANUAL and close 1-CH-FCV-1122. 2) Close 1-CH-HCV-1311, Auxiliary Spray Valve. 3) Open Normal Charging Line Isolation Valves: • 1-CH-MOV-1289A • 1-CH-MOV-1289B • 1-CH-HCV-1310 4) Open 1-CH-FCV-1122 to establish greater than 25 gpm flow. 5) Adjust charging to restore PRZR level to greater than 15%.

(STEP 6 CONTINUED ON NEXT PAGE)

CONTINUOUS ACTION PAGE FOR 1-ES-0.1

1. ADVERSE CONTAINMENT CRITERIA
   IF either of the following conditions exist, THEN use setpoints in brackets:
   - 20 psia Containment pressure, OR
   - Containment radiation has reached or exceeded 10^5 R/hr (70% on High Range Recorder).

2. SI ACTUATION CRITERIA
   IF either condition listed below occurs OR an SI Actuation occurs, THEN manually initiate both trains of SI AND GO TO 1-E-0, REACTOR TRIP OR SAFETY INJECTION, STEP 1:
   - RCS subcooling based on Core Exit TCs - LESS THAN 25°F [75°F], OR
   - PRZR level - CANNOT BE MAINTAINED GREATER THAN 11% [40%].

3. ECST LEVEL CRITERIA
   WHEN the ECST level decreases to 40%, THEN initiate 1-AP-22.5, LOSS OF EMERGENCY CONDENSATE STORAGE TANK 1-CN-TK-1.

4. RCS TEMPERATURE CRITERIA
   WHEN RCS temperature is less than 547°F AND decreasing, THEN do the following:

   a) Stop dumping steam.

   b) Adjust total AFW flow to 400 gpm (340 gpm with RCPs OFF) until at least one SG narrow range level is greater than 11%.

   c) IF cooldown continues, THEN close the following:
      - MSTVs
      - MSTV Bypass Valves
      - SG Blowdown Trip Valves

5. PRZR SPRAY ISOLATION CRITERIA
   WHEN an RCP is stopped, THEN isolate PRZR spray from the stopped RCP.

STEP	ACTION/EXPECTED RESPONSE	RESPONSE NOT OBTAINED
6.	CHECK PRZR LEVEL CONTROL (Continued):	
	c) Verify letdown - IN SERVICE	c) <u>WHEN</u> PRZR level is greater than 15%, <u>THEN</u> manually put letdown in service: 1) Verify CC System in service. <u>IF</u> CC System is <u>NOT</u> in service, <u>THEN</u> GO TO Step 6d. 2) Put 1-CH-PCV-1145 in MANUAL and open to 100%. 3) Open the following Letdown Isolation Valves: • 1-CH-TV-1204A • 1-CH-TV-1204B • 1-CH-LCV-1460A • 1-CH-LCV-1460B 4) Open one of the following Letdown Orifice Isolation Valves: • 1-CH-HCV-1200A <u>OR</u> • 1-CH-HCV-1200B <u>OR</u> • 1-CH-HCV-1200C 5) Adjust 1-CH-PCV-1145 to establish 300 psig letdown pressure and put in AUTO. 6) Put additional Orifice Valves in service as required.

(STEP 6 CONTINUED ON NEXT PAGE)

CONTINUOUS ACTION PAGE FOR 1-ES-0.1

1. ADVERSE CONTAINMENT CRITERIA
   IF either of the following conditions exist, THEN use setpoints in brackets:
   - 20 psia Containment pressure, OR
   - Containment radiation has reached or exceeded 10^5 R/hr (70% on High Range Recorder).

2. SI ACTUATION CRITERIA
   IF either condition listed below occurs OR an SI Actuation occurs, THEN manually initiate both trains of SI AND GO TO 1-E-0, REACTOR TRIP OR SAFETY INJECTION, STEP 1:
   - RCS subcooling based on Core Exit TCs - LESS THAN 25°F [75°F], OR
   - PRZR level - CANNOT BE MAINTAINED GREATER THAN 11% [40%].

3. ECST LEVEL CRITERIA
   WHEN the ECST level decreases to 40%, THEN initiate 1-AP-22.5, LOSS OF EMERGENCY CONDENSATE STORAGE TANK 1-CN-TK-1.

4. RCS TEMPERATURE CRITERIA
   WHEN RCS temperature is less than 547°F AND decreasing, THEN do the following:

   a) Stop dumping steam.

   b) Adjust total AFW flow to 400 gpm (340 gpm with RCPs OFF) until at least one SG narrow range level is greater than 11%.

   c) IF cooldown continues, THEN close the following:

      - MSTVs
      - MSTV Bypass Valves
      - SG Blowdown Trip Valves

5. PRZR SPRAY ISOLATION CRITERIA
   WHEN an RCP is stopped, THEN isolate PRZR spray from the stopped RCP.

STEP	ACTION/EXPECTED RESPONSE	RESPONSE NOT OBTAINED
6.	CHECK PRZR LEVEL CONTROL (Continued):	
		7) Energize PRZR Heaters to maintain PRZR pressure at 2235 psig.
	d) PRZR level - BETWEEN 20% AND 29%	d) Control charging and letdown to maintain level between 20% and 29%.
7.__	CHECK PRZR PRESSURE CONTROL:	
	a) Pressure - GREATER THAN 1780 PSIG	a) Verify SI Actuation. IF SI is NOT actuated, THEN manually actuate both trains of SI. GO TO 1-E-0, REACTOR TRIP OR SAFETY INJECTION, STEP 1.

(STEP 7 CONTINUED ON NEXT PAGE)

CONTINUOUS ACTION PAGE FOR 1-ES-0.1

1. ADVERSE CONTAINMENT CRITERIA
   IF either of the following conditions exist, THEN use setpoints in brackets:
   - 20 psia Containment pressure, OR
   - Containment radiation has reached or exceeded 10^5 R/hr (70% on High Range Recorder).

2. SI ACTUATION CRITERIA
   IF either condition listed below occurs OR an SI Actuation occurs, THEN manually initiate both trains of SI AND GO TO 1-E-0, REACTOR TRIP OR SAFETY INJECTION, STEP 1:
   - RCS subcooling based on Core Exit TCs - LESS THAN 25°F [75°F], OR
   - PRZR level - CANNOT BE MAINTAINED GREATER THAN 11% [40%].

3. ECST LEVEL CRITERIA
   WHEN the ECST level decreases to 40%, THEN initiate 1-AP-22.5, LOSS OF EMERGENCY CONDENSATE STORAGE TANK 1-CN-TK-1.

4. RCS TEMPERATURE CRITERIA
   WHEN RCS temperature is less than 547°F AND decreasing, THEN do the following:

   a) Stop dumping steam.

   b) Adjust total AFW flow to 400 gpm (340 gpm with RCPs OFF) until at least one SG narrow range level is greater than 11%.

   c) IF cooldown continues, THEN close the following:

      - MSTVs
      - MSTV Bypass Valves
      - SG Blowdown Trip Valves

5. PRZR SPRAY ISOLATION CRITERIA
   WHEN an RCP is stopped, THEN isolate PRZR spray from the stopped RCP.

STEP	ACTION/EXPECTED RESPONSE	RESPONSE NOT OBTAINED
7.	CHECK PRZR PRESSURE CONTROL (Continued):	
	b) Pressure - STABLE AT OR TRENDING TO 2235 PSIG	b) IF pressure is less than 2235 psig and decreasing, THEN: 1) Verify PRZR PORVs are closed. IF NOT, THEN manually close. IF any valve cannot be closed, THEN manually close its Block Valve. 2) Verify PRZR Spray Valves are closed. IF NOT, THEN manually close. IF any valve cannot be closed, THEN stop RCP supplying failed Spray Valve: • 1-RC-P-1A (1-RC-PCV-1455A) • 1-RC-P-1C (1-RC-PCV-1455B) 3) Verify PRZR Heaters are on. IF NOT, THEN manually energize heaters.

(STEP 7 CONTINUED ON NEXT PAGE)

CONTINUOUS ACTION PAGE FOR 1-ES-0.1

1. ADVERSE CONTAINMENT CRITERIA
   IF either of the following conditions exist, THEN use setpoints in brackets:
   - 20 psia Containment pressure, OR
   - Containment radiation has reached or exceeded 10^5 R/hr (70% on High Range Recorder).

2. SI ACTUATION CRITERIA
   IF either condition listed below occurs OR an SI Actuation occurs, THEN manually initiate both trains of SI AND GO TO 1-E-0, REACTOR TRIP OR SAFETY INJECTION, STEP 1:
   - RCS subcooling based on Core Exit TCs - LESS THAN 25°F [75°F], OR
   - PRZR level - CANNOT BE MAINTAINED GREATER THAN 11% [40%].

3. ECST LEVEL CRITERIA
   WHEN the ECST level decreases to 40%, THEN initiate 1-AP-22.5, LOSS OF EMERGENCY CONDENSATE STORAGE TANK 1-CN-TK-1.

4. RCS TEMPERATURE CRITERIA
   WHEN RCS temperature is less than 547°F AND decreasing, THEN do the following:

   a) Stop dumping steam.

   b) Adjust total AFW flow to 400 gpm (340 gpm with RCPs OFF) until at least one SG narrow range level is greater than 11%.

   c) IF cooldown continues, THEN close the following:

      - MSTVs
      - MSTV Bypass Valves
      - SG Blowdown Trip Valves

5. PRZR SPRAY ISOLATION CRITERIA
   WHEN an RCP is stopped, THEN isolate PRZR spray from the stopped RCP.

STEP	ACTION/EXPECTED RESPONSE	RESPONSE NOT OBTAINED
7.	CHECK PRZR PRESSURE CONTROL (Continued):	IF pressure is greater than 2235 psig and increasing, THEN: 1) Verify PRZR Heaters are off. IF NOT, THEN put heaters in PTL. 2) Control pressure using normal PRZR spray. IF normal PRZR spray is NOT available AND letdown is in service, THEN use Auxiliary Spray. IF normal PRZR spray is NOT available AND letdown is NOT in service, THEN use one PRZR PORV.

CONTINUOUS ACTION PAGE FOR 1-ES-0.1

1. ADVERSE CONTAINMENT CRITERIA
   IF either of the following conditions exist, THEN use setpoints in brackets:
   - 20 psia Containment pressure, OR
   - Containment radiation has reached or exceeded 10^5 R/hr (70% on High Range Recorder).

2. SI ACTUATION CRITERIA
   IF either condition listed below occurs OR an SI Actuation occurs, THEN manually initiate both trains of SI AND GO TO 1-E-0, REACTOR TRIP OR SAFETY INJECTION, STEP 1:
   - RCS subcooling based on Core Exit TCs - LESS THAN 25°F [75°F], OR
   - PRZR level - CANNOT BE MAINTAINED GREATER THAN 11% [40%].

3. ECST LEVEL CRITERIA
   WHEN the ECST level decreases to 40%, THEN initiate 1-AP-22.5, LOSS OF EMERGENCY CONDENSATE STORAGE TANK 1-CN-TK-1.

4. RCS TEMPERATURE CRITERIA
   WHEN RCS temperature is less than 547°F AND decreasing, THEN do the following:

   a) Stop dumping steam.

   b) Adjust total AFW flow to 400 gpm (340 gpm with RCPs OFF) until at least one SG narrow range level is greater than 11%.

   c) IF cooldown continues, THEN close the following:
      - MSTVs
      - MSTV Bypass Valves
      - SG Blowdown Trip Valves

5. PRZR SPRAY ISOLATION CRITERIA
   WHEN an RCP is stopped, THEN isolate PRZR spray from the stopped RCP.

STEP	ACTION/EXPECTED RESPONSE	RESPONSE NOT OBTAINED
8.	VERIFY ALL IRPIs - 10 STEPS OR LESS	IF TWO or more IRPIs indicate greater than 10 STEPS, THEN emergency borate as follows: a) Place the in-service Boric Acid Transfer Pump in FAST. b) Open 1-CH-MOV-1350, Emergency Borate Valve. c) Verify Emergency Boration flow: • Emergency Boration Flow - 35 GPM OR GREATER • On-service Boric Acid Tank Level - DECREASING d) IF Emergency Boration flow NOT verified, THEN locally open 1-CH-MOV-1350 and verify flow. e) IF Emergency Boration flow STILL not verified, THEN Open 1-CH-FCV-1113A and locally open 1-CH-241, Manual Emergency Borate Valve. f) Record the following: • Time Emergency Boration started: _____ • Initial on-service BAST level: _____ g) Initiate Attachment 2, EMERGENCY BORATION FOR CONTROL RODS NOT FULLY INSERTED, to determine when emergency boration can be secured. h) Have the Shift Supervisor refer to Tech Spec 4.1.1.1.1.a.

CONTINUOUS ACTION PAGE FOR 1-ES-0.1

1. ADVERSE CONTAINMENT CRITERIA
   IF either of the following conditions exist, THEN use setpoints in brackets:
   - 20 psia Containment pressure, OR
   - Containment radiation has reached or exceeded 10^5 R/hr (70% on High Range Recorder).

2. SI ACTUATION CRITERIA
   IF either condition listed below occurs OR an SI Actuation occurs, THEN manually initiate both trains of SI AND GO TO 1-E-0, REACTOR TRIP OR SAFETY INJECTION, STEP 1:
   - RCS subcooling based on Core Exit TCs - LESS THAN 25°F [75°F], OR
   - PRZR level - CANNOT BE MAINTAINED GREATER THAN 11% [40%].

3. ECST LEVEL CRITERIA
   WHEN the ECST level decreases to 40%, THEN initiate 1-AP-22.5, LOSS OF EMERGENCY CONDENSATE STORAGE TANK 1-CN-TK-1.

4. RCS TEMPERATURE CRITERIA
   WHEN RCS temperature is less than 547°F AND decreasing, THEN do the following:

   a) Stop dumping steam.

   b) Adjust total AFW flow to 400 gpm (340 gpm with RCPs OFF) until at least one SG narrow range level is greater than 11%.

   c) IF cooldown continues, THEN close the following:
      - MSTVs
      - MSTV Bypass Valves
      - SG Blowdown Trip Valves

5. PRZR SPRAY ISOLATION CRITERIA
   WHEN an RCP is stopped, THEN isolate PRZR spray from the stopped RCP.

STEP	ACTION/EXPECTED RESPONSE	RESPONSE NOT OBTAINED

NOTE:
- Total feed flow may be reduced as desired when narrow range level in at least one SG is greater than 11%.
- Adequate feed flow to cause an increase in SG wide range level should be maintained to any SG that is less than 11% narrow range level.

9.__ CHECK SG LEVELS:

a) Narrow range level in at least one SG - GREATER THAN 11%	a) Maintain total AFW flow greater than or equal to 400 gpm (340 gpm with RCPs off) until narrow range level is greater than 11% in at least one SG.
b) Control feed flow to maintain all SG narrow range levels between 20% and 33%	b) IF narrow range level in any SG continues to increase, THEN stop feed to that SG.

NOTE: Upon restoration of AC Emergency Busses, the following equipment may be manually loaded as required: CRDM Fans, Containment Air Recirc Fans, and PRZR Heaters.

10.__ VERIFY ALL AC BUSSES - ENERGIZED BY OFFSITE POWER	Initiate 0-AP-10, LOSS OF ELECTRICAL POWER, to restore offsite power.

CONTINUOUS ACTION PAGE FOR 1-ES-0.1

1. ADVERSE CONTAINMENT CRITERIA
   IF either of the following conditions exist, THEN use setpoints in brackets:
   - 20 psia Containment pressure, OR
   - Containment radiation has reached or exceeded 10^5 R/hr (70% on High Range Recorder).

2. SI ACTUATION CRITERIA
   IF either condition listed below occurs OR an SI Actuation occurs, THEN manually initiate both trains of SI AND GO TO 1-E-0, REACTOR TRIP OR SAFETY INJECTION, STEP 1:
   - RCS subcooling based on Core Exit TCs - LESS THAN 25°F [75°F], OR
   - PRZR level - CANNOT BE MAINTAINED GREATER THAN 11% [40%].

3. ECST LEVEL CRITERIA
   WHEN the ECST level decreases to 40%, THEN initiate 1-AP-22.5, LOSS OF EMERGENCY CONDENSATE STORAGE TANK 1-CN-TK-1.

4. RCS TEMPERATURE CRITERIA
   WHEN RCS temperature is less than 547°F AND decreasing, THEN do the following:

   a) Stop dumping steam.

   b) Adjust total AFW flow to 400 gpm (340 gpm with RCPs OFF) until at least one SG narrow range level is greater than 11%.

   c) IF cooldown continues, THEN close the following:
      - MSTVs
      - MSTV Bypass Valves
      - SG Blowdown Trip Valves

5. PRZR SPRAY ISOLATION CRITERIA
   WHEN an RCP is stopped, THEN isolate PRZR spray from the stopped RCP.

STEP	ACTION/EXPECTED RESPONSE	RESPONSE NOT OBTAINED
11.__	TRANSFER CONDENSER STEAM DUMP TO STEAM PRESSURE MODE:	
	a) Verify Condenser Steam Dumps are available	a) Use SG PORVs. GO TO Step 12.
	b) Place Condenser Steam Dumps in Steam Pressure mode: 1) Put both Steam Dump Interlock switches to OFF/RESET 2) Put Steam Dump Controller to MANUAL 3) Put Mode Selector switch to STEAM PRESS 4) Verify or reduce Steam Dump demand to zero 5) Return Steam Dump Controller to AUTO 6) Verify Steam Dump demand - ZERO 7) Put both Interlock switches to ON	
	NOTE: RCPs should be run in the following order of priority to provide PRZR spray: C. A.	
12.__	CHECK RCP STATUS - AT LEAST ONE RUNNING	Try to start one RCP using 1-OP-5.2, REACTOR COOLANT PUMP STARTUP AND SHUTDOWN. IF an RCP cannot be started, THEN initiate Attachment 1 to monitor natural circulation.

CONTINUOUS ACTION PAGE FOR 1-ES-0.1

1. ADVERSE CONTAINMENT CRITERIA
   IF either of the following conditions exist, THEN use setpoints in brackets:
   - 20 psia Containment pressure, OR
   - Containment radiation has reached or exceeded 10^5 R/hr (70% on High Range Recorder).

2. SI ACTUATION CRITERIA
   IF either condition listed below occurs OR an SI Actuation occurs, THEN manually initiate both trains of SI AND GO TO 1-E-0, REACTOR TRIP OR SAFETY INJECTION, STEP 1:
   - RCS subcooling based on Core Exit TCs - LESS THAN 25°F [75°F], OR
   - PRZR level - CANNOT BE MAINTAINED GREATER THAN 11% [40%].

3. ECST LEVEL CRITERIA
   WHEN the ECST level decreases to 40%, THEN initiate 1-AP-22.5, LOSS OF EMERGENCY CONDENSATE STORAGE TANK 1-CN-TK-1.

4. RCS TEMPERATURE CRITERIA
   WHEN RCS temperature is less than 547°F AND decreasing, THEN do the following:

   a) Stop dumping steam.

   b) Adjust total AFW flow to 400 gpm (340 gpm with RCPs OFF) until at least one SG narrow range level is greater than 11%.

   c) IF cooldown continues, THEN close the following:

      - MSTVs
      - MSTV Bypass Valves
      - SG Blowdown Trip Valves

5. PRZR SPRAY ISOLATION CRITERIA
   WHEN an RCP is stopped, THEN isolate PRZR spray from the stopped RCP.

STEP	ACTION/EXPECTED RESPONSE	RESPONSE NOT OBTAINED
13.__	CHECK IF SOURCE RANGE DETECTORS SHOULD BE ENERGIZED:	
	a) Verify both of the following: • Intermediate Range flux - BELOW $5x10^{-11}$ AMPS ON N-35 AND N-36 • P-6 - NOT LIT: • Annunciator Panel "L" F-1 • Annunciator Panel "L" F-2	a) <u>WHEN</u> both conditions are satisfied <u>OR</u> 20 minutes have elapsed since Reactor Trip, <u>THEN</u> do Steps 13b, 13c and 13d. Continue with Step 14.
	b) Verify both Source Range Detectors - ENERGIZED: • N-31 • N-32	b) Manually energize BOTH Source Range Detectors using the Source Range Block and Reset switches.
	c) Transfer recorder NR-45 to S1 and S2 (N-31 and N-32)	
	d) Energize the Scaler-Timer using the power toggle switch	

CONTINUOUS ACTION PAGE FOR 1-ES-0.1

1. ADVERSE CONTAINMENT CRITERIA
   IF either of the following conditions exist, THEN use setpoints in brackets:
   - 20 psia Containment pressure, OR
   - Containment radiation has reached or exceeded 10^5 R/hr (70% on High Range Recorder).

2. SI ACTUATION CRITERIA
   IF either condition listed below occurs OR an SI Actuation occurs, THEN manually initiate both trains of SI AND GO TO 1-E-0, REACTOR TRIP OR SAFETY INJECTION, STEP 1:
   - RCS subcooling based on Core Exit TCs - LESS THAN 25°F [75°F], OR
   - PRZR level - CANNOT BE MAINTAINED GREATER THAN 11% [40%].

3. ECST LEVEL CRITERIA
   WHEN the ECST level decreases to 40%, THEN initiate 1-AP-22.5, LOSS OF EMERGENCY CONDENSATE STORAGE TANK 1-CN-TK-1.

4. RCS TEMPERATURE CRITERIA
   WHEN RCS temperature is less than 547°F AND decreasing, THEN do the following:

   a) Stop dumping steam.

   b) Adjust total AFW flow to 400 gpm (340 gpm with RCPs OFF) until at least one SG narrow range level is greater than 11%.

   c) IF cooldown continues, THEN close the following:

      - MSTVs
      - MSTV Bypass Valves
      - SG Blowdown Trip Valves

5. PRZR SPRAY ISOLATION CRITERIA
   WHEN an RCP is stopped, THEN isolate PRZR spray from the stopped RCP.

STEP	ACTION/EXPECTED RESPONSE	RESPONSE NOT OBTAINED
14.__	STOP AFW PUMPs:	
	a) Verify all SG narrow range levels - GREATER THAN 20%	a) <u>WHEN</u> all SG narrow range levels are greater than 20%, <u>THEN</u> perform Steps 14b through 14i. Continue with Step 15.
	b) Verify the following systems - IN SERVICE: • Condensate • Feedwater	b) <u>WHEN</u> Condensate <u>AND</u> Feedwater Systems are restored, <u>THEN</u> perform Steps 14c through 14i. Continue with Step 15.
	c) Verify all SG narrow range levels - LESS THAN 75%	c) <u>WHEN</u> all SG narrow range levels are less than 75%, <u>THEN</u> perform Steps 14d through 14i. Continue with Step 15.
	d) Ensure both train's FW Bypass Valve Isolation - RESET	
	e) Establish feed flow using Main Feed Bypass Valves	
	f) Control feed flow to maintain all SG narrow range levels between 20% and 33%	
	g) Reset AMSAC	
	h) Stop AFW Pumps and place in AUTO: • 1-FW-P-2 • 1-FW-P-3A • 1-FW-P-3B	
	i) Open AFW supply valves: • 1-FW-MOV-100D • 1-FW-MOV-100B • 1-FW-HCV-100C	

CONTINUOUS ACTION PAGE FOR 1-ES-0.1

1. ADVERSE CONTAINMENT CRITERIA
   IF either of the following conditions exist, THEN use setpoints in brackets:
   - 20 psia Containment pressure, OR
   - Containment radiation has reached or exceeded 10^5 R/hr (70% on High Range Recorder).

2. SI ACTUATION CRITERIA
   IF either condition listed below occurs OR an SI Actuation occurs, THEN manually initiate both trains of SI AND GO TO 1-E-0, REACTOR TRIP OR SAFETY INJECTION, STEP 1:
   - RCS subcooling based on Core Exit TCs - LESS THAN 25°F [75°F], OR
   - PRZR level - CANNOT BE MAINTAINED GREATER THAN 11% [40%].

3. ECST LEVEL CRITERIA
   WHEN the ECST level decreases to 40%, THEN initiate 1-AP-22.5, LOSS OF EMERGENCY CONDENSATE STORAGE TANK 1-CN-TK-1.

4. RCS TEMPERATURE CRITERIA
   WHEN RCS temperature is less than 547°F AND decreasing, THEN do the following:

   a) Stop dumping steam.

   b) Adjust total AFW flow to 400 gpm (340 gpm with RCPs OFF) until at least one SG narrow range level is greater than 11%.

   c) IF cooldown continues, THEN close the following:
      - MSTVs
      - MSTV Bypass Valves
      - SG Blowdown Trip Valves

5. PRZR SPRAY ISOLATION CRITERIA
   WHEN an RCP is stopped, THEN isolate PRZR spray from the stopped RCP.

STEP	ACTION/EXPECTED RESPONSE	RESPONSE NOT OBTAINED

15.__ INITIATE 1-OP-7.11, SHUTDOWN OF UNNECESSARY PLANT EQUIPMENT FOLLOWING ENTRY INTO EOPs

16.__ MAINTAIN PLANT CONDITIONS - STABLE:

- PRZR pressure - APPROXIMATELY 2235 PSIG
- PRZR level - BETWEEN 20% AND 29%
- Maintain SG narrow range level - BETWEEN 20% AND 33%
- RCS average temperature:
  - STABLE AT 547°F

    OR

  - TRENDING TO 547°F

17.__ IDENTIFY AND CLASSIFY CAUSE OF REACTOR TRIP:

- First Out indication
- Computer Post-trip Review
- Sequence of Events Recorder
- Initiate Reactor Trip and Shutdown Report

CONTINUOUS ACTION PAGE FOR 1-ES-0.1

1. ADVERSE CONTAINMENT CRITERIA
   IF either of the following conditions exist, THEN use setpoints in brackets:
   - 20 psia Containment pressure, OR
   - Containment radiation has reached or exceeded 10^5 R/hr (70% on High Range Recorder).

2. SI ACTUATION CRITERIA
   IF either condition listed below occurs OR an SI Actuation occurs, THEN manually initiate both trains of SI AND GO TO 1-E-0, REACTOR TRIP OR SAFETY INJECTION, STEP 1:
   - RCS subcooling based on Core Exit TCs - LESS THAN 25°F [75°F], OR
   - PRZR level - CANNOT BE MAINTAINED GREATER THAN 11% [40%].

3. ECST LEVEL CRITERIA
   WHEN the ECST level decreases to 40%, THEN initiate 1-AP-22.5, LOSS OF EMERGENCY CONDENSATE STORAGE TANK 1-CN-TK-1.

4. RCS TEMPERATURE CRITERIA
   WHEN RCS temperature is less than 547°F AND decreasing, THEN do the following:

   a) Stop dumping steam.

   b) Adjust total AFW flow to 400 gpm (340 gpm with RCPs OFF) until at least one SG narrow range level is greater than 11%.

   c) IF cooldown continues, THEN close the following:
      - MSTVs
      - MSTV Bypass Valves
      - SG Blowdown Trip Valves

5. PRZR SPRAY ISOLATION CRITERIA
   WHEN an RCP is stopped, THEN isolate PRZR spray from the stopped RCP.

STEP	ACTION/EXPECTED RESPONSE	RESPONSE NOT OBTAINED
18	**DETERMINE IF A NATURAL CIRCULATION COOLDOWN IS REQUIRED:** a) All conditions exist: • No RCPs - AVAILABLE • Cooldown is desired • Supt. Operations or SRO-on call approval b) GO TO 1-ES-0.2A, NATURAL CIRCULATION COOLDOWN WITH CRDM FANS, STEP 1	a) GO TO appropriate procedure: • 1-OP-1.5, UNIT STARTUP FROM MODE 3 TO MODE 2 OR • 1-OP-3.2, UNIT SHUTDOWN FROM MODE 3 TO MODE 4

- END -

CONTINUOUS ACTION PAGE FOR 1-ES-0.1

1. ADVERSE CONTAINMENT CRITERIA
   IF either of the following conditions exist, THEN use setpoints in brackets:
   - 20 psia Containment pressure, OR
   - Containment radiation has reached or exceeded 10^5 R/hr (70% on High Range Recorder).

2. SI ACTUATION CRITERIA
   IF either condition listed below occurs OR an SI Actuation occurs, THEN manually initiate both trains of SI AND GO TO 1-E-0, REACTOR TRIP OR SAFETY INJECTION, STEP 1:
   - RCS subcooling based on Core Exit TCs - LESS THAN 25°F [75°F], OR
   - PRZR level - CANNOT BE MAINTAINED GREATER THAN 11% [40%].

3. ECST LEVEL CRITERIA
   WHEN the ECST level decreases to 40%, THEN initiate 1-AP-22.5, LOSS OF EMERGENCY CONDENSATE STORAGE TANK 1-CN-TK-1.

4. RCS TEMPERATURE CRITERIA
   WHEN RCS temperature is less than 547°F AND decreasing, THEN do the following:

   a) Stop dumping steam.

   b) Adjust total AFW flow to 400 gpm (340 gpm with RCPs OFF) until at least one SG narrow range level is greater than 11%.

   c) IF cooldown continues, THEN close the following:

      - MSTVs
      - MSTV Bypass Valves
      - SG Blowdown Trip Valves

5. PRZR SPRAY ISOLATION CRITERIA
   WHEN an RCP is stopped, THEN isolate PRZR spray from the stopped RCP.

NOTE: The following conditions support or indicate natural circulation flow.

1. __ VERIFY NATURAL CIRCULATION FLOW

   Increase dumping steam.

   - RCS subcooling based on Core Exit TCs - GREATER THAN 25°F
   - SG pressures - STABLE OR DECREASING
   - RCS Hot Leg temperatures - STABLE OR DECREASING
   - Core Exit TCs - STABLE OR DECREASING
   - RCS Cold Leg temperatures - AT SATURATION TEMPERATURE FOR SG PRESSURE

2. __ CONTINUE TO MONITOR NATURAL CIRCULATION FLOW UNTIL FORCED CIRCULATION IS ESTABLISHED

CONTINUOUS ACTION PAGE FOR 1-ES-0.1

1. ADVERSE CONTAINMENT CRITERIA
   IF either of the following conditions exist, THEN use setpoints in brackets:
   - 20 psia Containment pressure, OR
   - Containment radiation has reached or exceeded 10^5 R/hr (70% on High Range Recorder).

2. SI ACTUATION CRITERIA
   IF either condition listed below occurs OR an SI Actuation occurs, THEN manually initiate both trains of SI AND GO TO 1-E-0, REACTOR TRIP OR SAFETY INJECTION, STEP 1:
   - RCS subcooling based on Core Exit TCs - LESS THAN 25°F [75°F], OR
   - PRZR level - CANNOT BE MAINTAINED GREATER THAN 11% [40%].

3. ECST LEVEL CRITERIA
   WHEN the ECST level decreases to 40%, THEN initiate 1-AP-22.5, LOSS OF EMERGENCY CONDENSATE STORAGE TANK 1-CN-TK-1.

4. RCS TEMPERATURE CRITERIA
   WHEN RCS temperature is less than 547°F AND decreasing, THEN do the following:

   a) Stop dumping steam.

   b) Adjust total AFW flow to 400 gpm (340 gpm with RCPs OFF) until at least one SG narrow range level is greater than 11%.

   c) IF cooldown continues, THEN close the following:
      - MSTVs
      - MSTV Bypass Valves
      - SG Blowdown Trip Valves

5. PRZR SPRAY ISOLATION CRITERIA
   WHEN an RCP is stopped, THEN isolate PRZR spray from the stopped RCP.

NOTE: If 1-CH-241 is used as the flow path, then the boration amount should be verified by the change in BAST level or by a 1-PT-10 series procedure.

1.___Determine conditions to stop Emergency Boration:

a) Determine total Equivalent Stuck Rods using the following table:

Actual IRPI Indication	Record IRPI IDs for IRPIs indicating NOT fully inserted	Convert Actual IRPI to Equivalent Stuck Rods (EQSR):	Record Equivalent Stuck Rod Subtotals:
Any Rod >20 steps	_____	1 rod = 1 EQSR	_____
Rods indicating 11-20 (inclusive) steps withdrawn	_____	1-5 rods = 1 EQSR 6-9 rods = 2 EQSR 10-16 rods = 3 EQSR 17-32 rods = 4 EQSR 33 or more = 5 EQSR	_____
		Total Equivalent Stuck Rods:	_____

b) IF ONLY ONE Total Equivalent Stuck Rod was recorded in Step 1a table, THEN GO TO Attachment 2, EMERGENCY BORATION FOR CONTROL RODS NOT FULLY INSERTED, Step 2 to stop Emergency Boration.

c) IF TWO or more Total Equivalent Stuck Rods were recorded in Step 1a table, THEN monitor for one of the following conditions to stop Emergency Boration:

- 25 minutes for each Equivalent Stuck Rod has elapsed.

OR

- 15% BAST Level for each Equivalent Stuck Rod has been inserted.

OR

- Adequate shutdown margin has been verified using a 1-PT-10 series procedure.

CONTINUOUS ACTION PAGE FOR 1-ES-0.1

1. ADVERSE CONTAINMENT CRITERIA
   IF either of the following conditions exist, THEN use setpoints in brackets:
   - 20 psia Containment pressure, OR
   - Containment radiation has reached or exceeded 10^5 R/hr (70% on High Range Recorder).

2. SI ACTUATION CRITERIA
   IF either condition listed below occurs OR an SI Actuation occurs, THEN manually initiate both trains of SI AND GO TO 1-E-0, REACTOR TRIP OR SAFETY INJECTION, STEP 1:
   - RCS subcooling based on Core Exit TCs - LESS THAN 25°F [75°F], OR
   - PRZR level - CANNOT BE MAINTAINED GREATER THAN 11% [40%].

3. ECST LEVEL CRITERIA
   WHEN the ECST level decreases to 40%, THEN initiate 1-AP-22.5, LOSS OF EMERGENCY CONDENSATE STORAGE TANK 1-CN-TK-1.

4. RCS TEMPERATURE CRITERIA
   WHEN RCS temperature is less than 547°F AND decreasing, THEN do the following:

   a) Stop dumping steam.

   b) Adjust total AFW flow to 400 gpm (340 gpm with RCPs OFF) until at least one SG narrow range level is greater than 11%.

   c) IF cooldown continues, THEN close the following:

      - MSTVs
      - MSTV Bypass Valves
      - SG Blowdown Trip Valves

5. PRZR SPRAY ISOLATION CRITERIA
   WHEN an RCP is stopped, THEN isolate PRZR spray from the stopped RCP.

2.___ WHEN Emergency Boration is no longer required, THEN stop Emergency Boration as follows:

a) Place Boric Acid Transfer Pump in AUTO.

b) Close valves that were opened:

- ___ 1-CH-MOV-1350
- ___ 1-CH-FCV-1113A
- ___ 1-CH-241

c) Record the following:

- Time Emergency Boration stopped: _____
- Final on-service BAST level: _____

3.___Return to procedure and step in effect.

- END -

CONTINUOUS ACTION PAGE FOR 1-ES-0.1

1. ADVERSE CONTAINMENT CRITERIA
   IF either of the following conditions exist, THEN use setpoints in brackets:
   - 20 psia Containment pressure, OR
   - Containment radiation has reached or exceeded 10^5 R/hr (70% on High Range Recorder).

2. SI ACTUATION CRITERIA
   IF either condition listed below occurs OR an SI Actuation occurs, THEN manually initiate both trains of SI AND GO TO 1-E-0, REACTOR TRIP OR SAFETY INJECTION, STEP 1:
   - RCS subcooling based on Core Exit TCs - LESS THAN 25°F [75°F], OR
   - PRZR level - CANNOT BE MAINTAINED GREATER THAN 11% [40%].

3. ECST LEVEL CRITERIA
   WHEN the ECST level decreases to 40%, THEN initiate 1-AP-22.5, LOSS OF EMERGENCY CONDENSATE STORAGE TANK 1-CN-TK-1.

4. RCS TEMPERATURE CRITERIA
   WHEN RCS temperature is less than 547°F AND decreasing, THEN do the following:

   a) Stop dumping steam.

   b) Adjust total AFW flow to 400 gpm (340 gpm with RCPs OFF) until at least one SG narrow range level is greater than 11%.

   c) IF cooldown continues, THEN close the following:
      - MSTVs
      - MSTV Bypass Valves
      - SG Blowdown Trip Valves

5. PRZR SPRAY ISOLATION CRITERIA
   WHEN an RCP is stopped, THEN isolate PRZR spray from the stopped RCP.

Continuous Action Page Steps are listed on the back of this page.

CONTINUOUS ACTION PAGE FOR 1-ES-0.1

1. ADVERSE CONTAINMENT CRITERIA
   IF either of the following conditions exist, THEN use setpoints in brackets:
   - 20 psia Containment pressure, OR
   - Containment radiation has reached or exceeded 10^5 R/hr (70% on High Range Recorder).

2. SI ACTUATION CRITERIA
   IF either condition listed below occurs OR an SI Actuation occurs, THEN manually initiate both trains of SI AND GO TO 1-E-0, REACTOR TRIP OR SAFETY INJECTION, STEP 1:
   - RCS subcooling based on Core Exit TCs - LESS THAN 25°F [75°F], OR
   - PRZR level - CANNOT BE MAINTAINED GREATER THAN 11% [40%].

3. ECST LEVEL CRITERIA
   WHEN the ECST level decreases to 40%, THEN initiate 1-AP-22.5, LOSS OF EMERGENCY CONDENSATE STORAGE TANK 1-CN-TK-1.

4. RCS TEMPERATURE CRITERIA
   WHEN RCS temperature is less than 547°F AND decreasing, THEN do the following:

   a) Stop dumping steam.

   b) Adjust total AFW flow to 400 gpm (340 gpm with RCPs OFF) until at least one SG narrow range level is greater than 11%.

   c) IF cooldown continues, THEN close the following:

      - MSTVs
      - MSTV Bypass Valves
      - SG Blowdown Trip Valves

5. PRZR SPRAY ISOLATION CRITERIA
   WHEN an RCP is stopped, THEN isolate PRZR spray from the stopped RCP.

Continuous Action Page Steps are listed on the back of this page.

CONTINUOUS ACTION PAGE FOR 1-ES-0.1

1. ADVERSE CONTAINMENT CRITERIA
   IF either of the following conditions exist, THEN use setpoints in brackets:
   - 20 psia Containment pressure, OR
   - Containment radiation has reached or exceeded 10^5 R/hr (70% on High Range Recorder).

2. SI ACTUATION CRITERIA
   IF either condition listed below occurs OR an SI Actuation occurs, THEN manually initiate both trains of SI AND GO TO 1-E-0, REACTOR TRIP OR SAFETY INJECTION, STEP 1:
   - RCS subcooling based on Core Exit TCs - LESS THAN 25°F [75°F], OR
   - PRZR level - CANNOT BE MAINTAINED GREATER THAN 11% [40%].

3. ECST LEVEL CRITERIA
   WHEN the ECST level decreases to 40%, THEN initiate 1-AP-22.5, LOSS OF EMERGENCY CONDENSATE STORAGE TANK 1-CN-TK-1.

4. RCS TEMPERATURE CRITERIA
   WHEN RCS temperature is less than 547°F AND decreasing, THEN do the following:

   a) Stop dumping steam.

   b) Adjust total AFW flow to 400 gpm (340 gpm with RCPs OFF) until at least one SG narrow range level is greater than 11%.

   c) IF cooldown continues, THEN close the following:

      - MSTVs
      - MSTV Bypass Valves
      - SG Blowdown Trip Valves

5. PRZR SPRAY ISOLATION CRITERIA
   WHEN an RCP is stopped, THEN isolate PRZR spray from the stopped RCP.

Continuous Action Page Steps are listed on the back of this page.

CONTINUOUS ACTION PAGE FOR 1-ES-0.1

1. ADVERSE CONTAINMENT CRITERIA
   IF either of the following conditions exist, THEN use setpoints in brackets:
   - 20 psia Containment pressure, OR
   - Containment radiation has reached or exceeded 10^5 R/hr (70% on High Range Recorder).

2. SI ACTUATION CRITERIA
   IF either condition listed below occurs OR an SI Actuation occurs, THEN manually initiate both trains of SI AND GO TO 1-E-0, REACTOR TRIP OR SAFETY INJECTION, STEP 1:
   - RCS subcooling based on Core Exit TCs - LESS THAN 25°F [75°F], OR
   - PRZR level - CANNOT BE MAINTAINED GREATER THAN 11% [40%].

3. ECST LEVEL CRITERIA
   WHEN the ECST level decreases to 40%, THEN initiate 1-AP-22.5, LOSS OF EMERGENCY CONDENSATE STORAGE TANK 1-CN-TK-1.

4. RCS TEMPERATURE CRITERIA
   WHEN RCS temperature is less than 547°F AND decreasing, THEN do the following:

   a) Stop dumping steam.

   b) Adjust total AFW flow to 400 gpm (340 gpm with RCPs OFF) until at least one SG narrow range level is greater than 11%.

   c) IF cooldown continues, THEN close the following:

      - MSTVs
      - MSTV Bypass Valves
      - SG Blowdown Trip Valves

5. PRZR SPRAY ISOLATION CRITERIA
   WHEN an RCP is stopped, THEN isolate PRZR spray from the stopped RCP.

NOTE: Monitor EDG load parameters closely during any pump operations.

1. IF 2H EDG is the sole source of power to 2H Emergency Bus, THEN do the following to limit the amount of instantaneous loading that could occur in the event of an SI/CDA:

__ a) Start 2-SW-P-1A.

__ b) IF 1-SW-P-1B is running on the same SW Header as 2-SW-P-1A AND 1J EDG is NOT the sole source of power to the 1J Emergency bus, THEN 1-SW-P-1B may be placed in AUTO-AFTER-STOP.

NOTE: 2-CH-P-1C, C Charging Pump, has no automatic start features. If both 2-CH-P-1A and 2-CH-P-1B are running, then 2-CH-P-1C will receive an auto trip.

c) Align Charging Pumps as follows:

__ 1) IF 2-CH-P-1C is running on the 2H bus, THEN place 2-CH-P-1A in Pull-To-Lock.

__ 2) IF 2-CH-P-1C is NOT running on the 2H bus AND 2-CH-P-1A is available, THEN start 2-CH-P-1A.

__ 3) IF 2-CH-P-1B is running, AND 2J EDG is NOT the sole source of power to the 2J Emergency Bus, THEN 2-CH-P-1B may be placed in AUTO-AFTER-STOP.

(STEP 1 CONTINUED ON NEXT PAGE)

1. IF 2H EDG is the sole source of power to 2H Emergency Bus, THEN do the following (Continued):

NOTE: The basis for the EDG load limit is 1500 Kw of loads will start on a CDA. The EDG is rated for 3000 Kw. The EDG cannot initially be loaded >1500 Kw, with the exception of loads that will trip on a CDA signal.

__ d) 2H EDG loading prior to any accident must be limited to 1500 Kw plus the load values of any loads which trip upon an accident signal as listed below. Determine 2H EDG load limit as follows:

(x) - Total of KW ratings of all RUNNING equipment from the table below.

_____ + 1500 Kw = _____
(x) EDG Load Limit

NOTE: IF 2-HV-F-1C is running on 2H emergency Bus, THEN include the Kw rating in the calculation. 2-FW-P-3A is included because the pump is assumed to start during an accident condition.

LOAD	KW
2-CC-P-1A	311
2-HV-F-37A	29
2-HV-F-37B	29
2-HV-F-37C	29
2-HV-F-1A	155
2-HV-F-1C	155
2-FW-P-3A	284

__ e) IF existing EDG load is greater than the limit calculated in substep 1d above, THEN reduce EDG load to less than or equal to the calculated limit.

2. IF 2J EDG is the sole source of power to 2J Emergency Bus, THEN do the following to limit the amount of instantaneous loading that could occur in the event of an SI/CDA:

__ a) Start 2-SW-P-1B.

__ b) IF 1-SW-P-1A is running on the same SW Header as 2-SW-P-1B AND 1H EDG is NOT the sole source of power to the 1H Emergency bus, THEN 1-SW-P-1A may be placed in AUTO-AFTER-STOP.

c) Align Charging Pumps as follows:

__ 1) IF 2-CH-P-1C is running on the 2J bus, THEN place 2-CH-P-1B in Pull-To-Lock.

__ 2) IF 2-CH-P-1C is NOT running on the 2J bus AND 2-CH-P-1B is available, THEN start 2-CH-P-1B.

__ 3) IF 2-CH-P-1A is running, AND 2H EDG is NOT the sole source of power to the 2H Emergency Bus, THEN 2-CH-P-1A may be placed in AUTO-AFTER-STOP.

NOTE: The basis for the EDG load limit is 1500 Kw of loads will start on a CDA. The EDG is rated for 3000 Kw. The EDG cannot initially be loaded >1500 Kw, with the exception of loads that will trip on a CDA signal.

__ d) 2J EDG loading prior to any accident must be limited to 1500 Kw plus the load values of any loads which trip upon an accident signal as listed below. Determine 2J EDG load limit as follows:

(x) - Total of KW ratings of all RUNNING equipment from the table below.

_____ + 1500 Kw = _____
(x) EDG Load Limit

NOTE: IF 2-HV-F-1C is running on 2J Emergency Bus, THEN include the Kw rating in the calculation. 2-FW-P-3B is included because the pump is assumed to start during an accident condition.

LOAD	KW
2-CC-P-1B	311
2-HV-F-37D	29
2-HV-F-37E	29
2-HV-F-37F	29
2-HV-F-1B	155
2-HV-F-1C	155
2-FW-P-3B	284

__ e) IF existing EDG load is greater than the limit calculated in substep 2d above, THEN reduce EDG load to less than or equal to the calculated limit.

3. WHEN Offsite power is restored to the Unit 2 Emergency Busses, THEN restore the Service Water and Charging systems to normal as follows:

   __ a) Restore Service Water Pump alignment as directed by the Shift Supervisor using 0-OP-49.4, SHIFTING SERVICE WATER COMPONENTS (PUMPS AND SPRAYS). Ensure all operable SW Pumps not running are in AUTO.

   __ b) Restore Charging Pump alignment as directed by the Shift Supervisor using 2-OP-8.1, CHEMICAL AND VOLUME CONTROL SYSTEM. Ensure all operable Charging Pumps not running are in Auto-After-Stop.

NOTE: Monitor EDG load parameters closely during any pump operations.

1. IF 1H EDG is the sole source of power to 1H Emergency Bus, THEN do the following to limit the amount of instantaneous loading that could occur in the the event of an SI/CDA:

__ a) Start 1-SW-P-1A.

__ b) IF 2-SW-P-1B is running on the same SW Header as 1-SW-P-1A AND 2J EDG is NOT the sole source of power to the 2J Emergency bus, THEN 2-SW-P-1B may be placed in AUTO-AFTER-STOP.

NOTE: 1-CH-P-1C, C Charging Pump, has no automatic start features. If both 1-CH-P-1A and 1-CH-P-1B are running, then 1-CH-P-1C will receive an auto trip.

c) Align Charging Pumps as follows:

__ 1) IF 1-CH-P-1C is running on the 1H bus, THEN place 1-CH-P-1A in Pull-To-Lock.

__ 2) IF 1-CH-P-1C is NOT running on the 1H bus AND 1-CH-P-1A is available, THEN start 1-CH-P-1A.

__ 3) IF 1-CH-P-1B is running, AND 1J EDG is NOT the sole source of power to the 1J Emergency Bus, THEN 1-CH-P-1B may be placed in AUTO-AFTER-STOP.

(STEP 1 CONTINUED ON NEXT PAGE)

1. IF 1H EDG is the sole source of power to 1H Emergency Bus, THEN do the following (Continued):

NOTE: The basis for the EDG load limit is 1500 Kw of loads will start on a CDA. The EDG is rated for 3000 Kw. The EDG cannot initially be loaded >1500 Kw, with the exception of loads that will trip on a CDA signal.

__ d) 1H EDG loading prior to any accident must be limited to 1500 Kw plus the load values of any loads which trip upon an accident signal as listed below. Determine 1H EDG load limit as follows:

(x) - Total of KW ratings of all RUNNING equipment from the table below.

_____ + 1500 Kw = _____
(x) EDG Load Limit

NOTE: IF 1-HV-F-1C is running on 1H Emergency Bus, THEN include the Kw rating in the calculation. 1-FW-P-3A is included because the pump is assumed to start during an accident condition.

LOAD	KW
1-CC-P-1A	311
1-HV-F-37A	29
1-HV-F-37B	29
1-HV-F-37C	29
1-HV-F-1A	155
1-HV-F-1C	155
1-FW-P-3A	284

__ e) IF existing EDG load is greater than the limit calculated in substep 1d above, THEN reduce EDG load to less than or equal to the calculated limit.

2. IF 1J EDG is the sole source of power to 1J Emergency Bus, THEN do the following to limit the amount of instantaneous loading that could occur in the the event of an SI/CDA:

__ a) Start 1-SW-P-1B.

__ b) IF 2-SW-P-1A is running on the same SW Header as 1-SW-P-1B AND 2H EDG is NOT the sole source of power to the 2H Emergency bus, THEN 2-SW-P-1A may be placed in AUTO-AFTER-STOP.

c) Align Charging Pumps as follows:

__ 1) IF 1-CH-P-1C is running on the 1J bus, THEN place 1-CH-P-1B in Pull-to-Lock.

__ 2) IF 1-CH-P-1C is NOT running on the 1J bus AND 1-CH-P-1B is available, THEN start 1-CH-P-1B.

__ 3) IF 1-CH-P-1A is running, AND 1H EDG is NOT the sole source of power to the 1H Emergency Bus, THEN 1-CH-P-1A may be placed in AUTO-AFTER-STOP.

NOTE: The basis for the EDG load limit is 1500 Kw of loads will start on a CDA. The EDG is rated for 3000 Kw. The EDG cannot initially be loaded >1500 Kw, with the exception of loads that will trip on a CDA signal.

__ d) 1J EDG loading prior to any accident must be limited to 1500 Kw plus the load values of any loads which trip upon an accident signal as listed below. Determine 1J EDG load limit as follows:

(x) - Total of Kw ratings of all RUNNING equipment from the table below.

_____ + 1500 Kw = _____
(x) EDG Load Limit

NOTE: IF 1-HV-F-1C is running on 1J Emergency Bus, THEN include the Kw rating in the calculation. 1-FW-P-3B is included because the pump is assumed to start during an accident condition.

LOAD	KW
1-CC-P-1B	311
1-HV-F-37D	29
1-HV-F-37E	29
1-HV-F-37F	29
1-HV-F-1B	155
1-HV-F-1C	155
1-FW-P-3B	284

__ e) IF existing EDG load is greater than the limit calculated in substep 2d above, THEN reduce EDG load to less than or equal to the calculated limit.

3. WHEN Offsite Power is restored to the Unit 1 Emergency Busses, THEN restore the Service Water and Charging systems to normal as follows:

__ a) Restore Service Water Pump alignment as directed by the Shift Supervisor using 0-OP-49.4, SHIFTING SERVICE WATER COMPONENTS (PUMPS AND SPRAYS). Ensure all operable SW Pumps not running are in AUTO.

__ b) Restore Charging Pump alignment as directed by the Shift Supervisor using 1-OP-8.1, CHEMICAL AND VOLUME CONTROL SYSTEM. Ensure all operable Charging Pumps not running are in AUTO-AFTER-STOP.

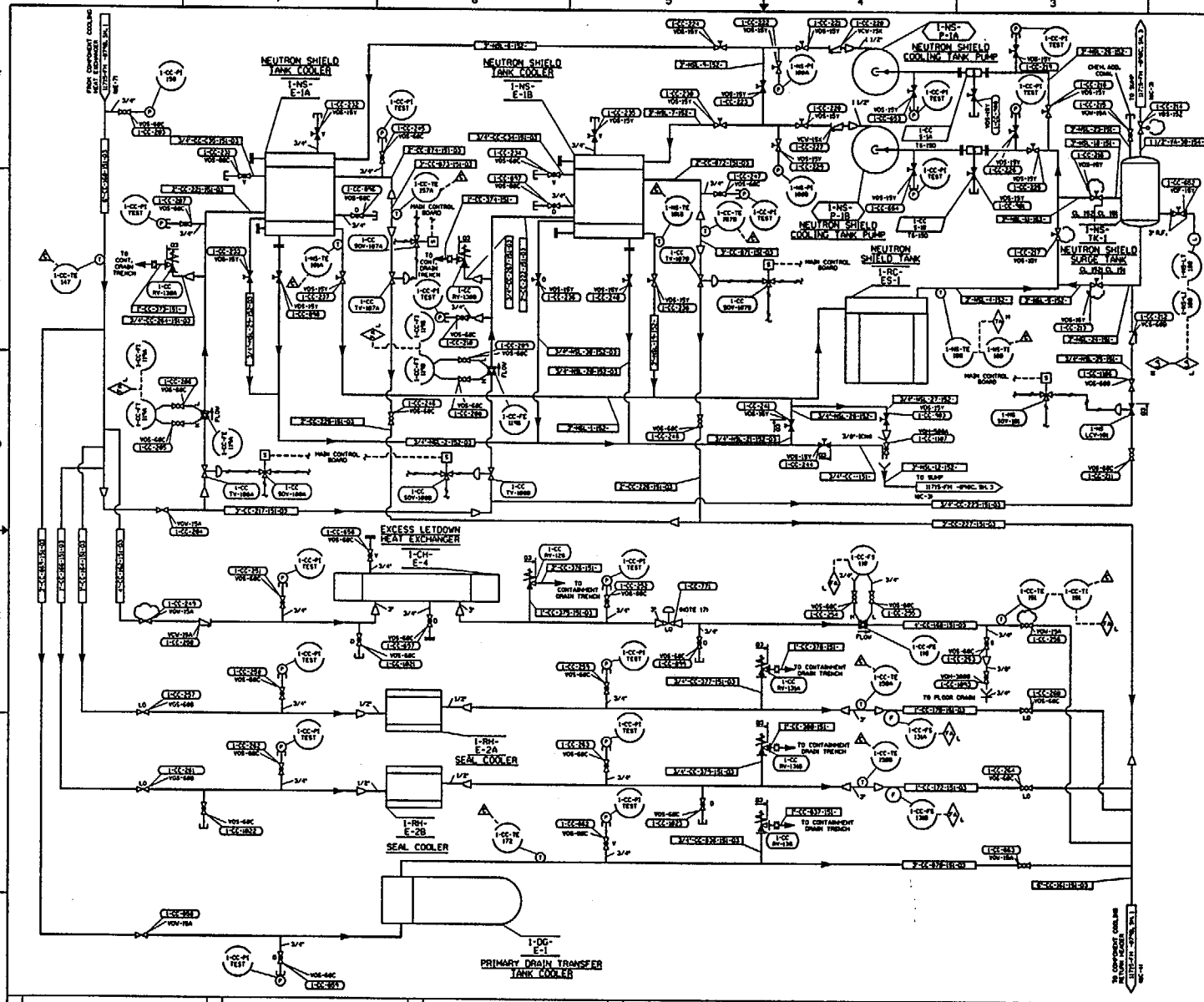

NOTES

1. FOR NOTES, SEE SHEET 1 OF THIS DRAWING.

THIS CAD DRAWING SHEETS 1,2,3,4 & 5 OF 5 SUPERSEDES THE MANUAL FLOW AND VALVE OPERATING NUMBERS DIAGRAMS 11715-FM-0236 REV-17 AND 11715-FM-0798 REV-17 RESPECTIVELY.

REFERENCE DRAWINGS

NUMBER	TITLE
01. FOR ADDITIONAL REFERENCE DRAWINGS, SEE SHEET 1 OF THIS DRAWING.	
02. 11715-FM-0798C	FLOW/VOH DIAGRAM/UNIT 1 & DRAIN SYSTEM
03. 11715-FM-0798A	FLOW/VOH DIAGRAM/COMPONENT COOLING WATER SYSTEM

BYPRODUCT DRAWINGS

1. 11715-CSM-0798, SHLS	ISI CLASSIFICATION BOUNDARY DRAWING
2. DELETED	
3. 11715-SPM-0798, SHLS	ISI SYSTEM PRESSURE TESTING DRAWING

BYPRODUCT NOTES

REVISION DESCRIPTION

REVISED PER DUR 93-827
THIS DRAWING SUPERSEDES REV 23

VIRGINIA POWER
NORTH CAROLINA POWER

NUCLEAR ENGINEERING SERVICES
RICHMOND, VIRGINIA

FLOW/VALVE OPERATING NUMBERS DIAGRAM
COMPONENT COOLING WATER SYSTEM
NORTH ANNA POWER STATION UNIT 1
VIRGINIA POWER

DSGN	DSGN SUPV	CAD NO. /usr/dgn/N1071S9DGN001	
DRWN HES/COL	DISPL ENGR	DRAWING NO. 11715-FM -0798	REV. 24
CHKD WEV	LEAD ENGR		
DATE 11/21/86	SCALE NONE	UNLESS OTHERWISE NOTED	SH 5 OF 5

(LANDH)
18-SEP-1997 08:37
/usr/dgn/N1071S9DGN001

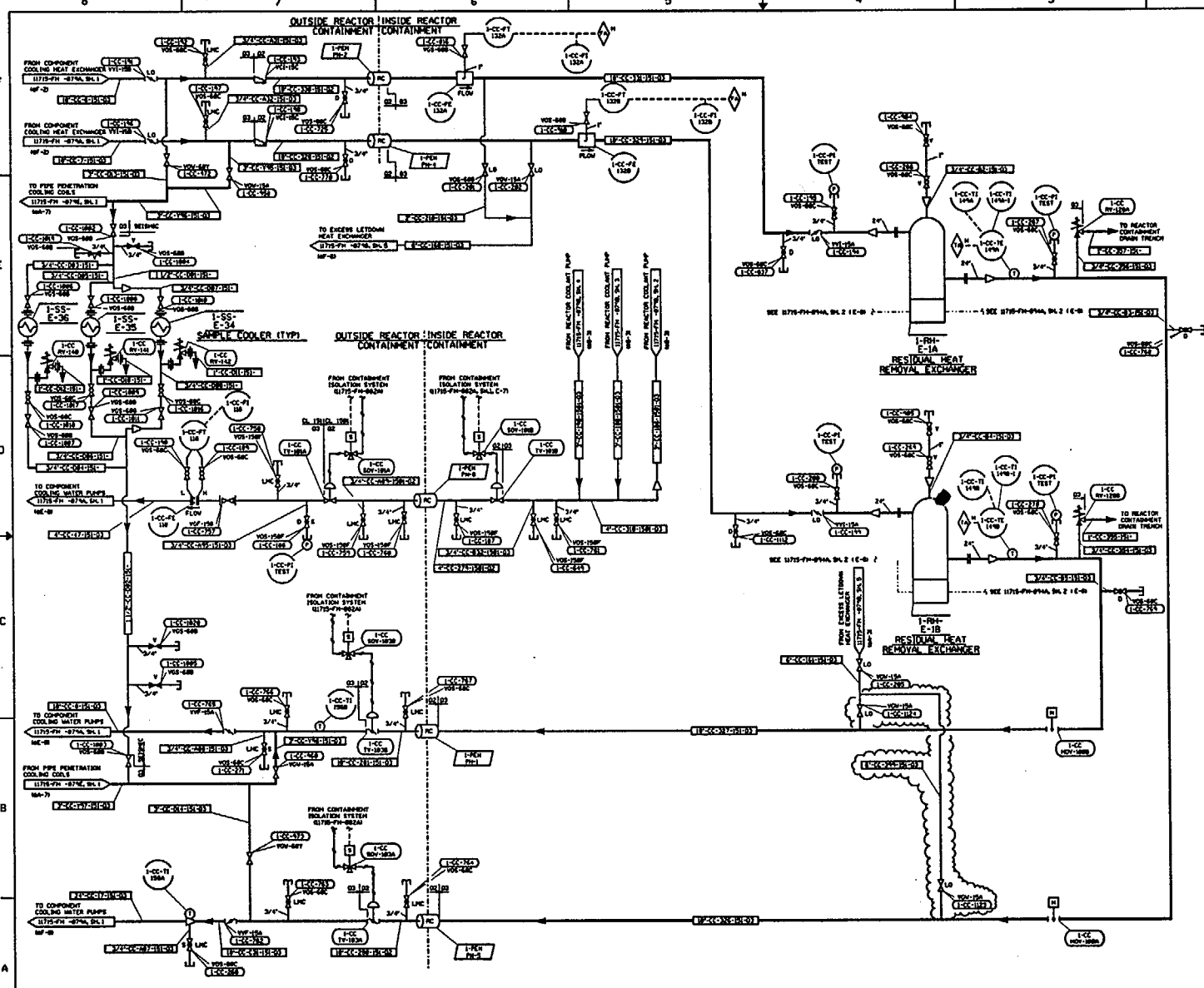

NOTES

1. FOR NOTES, SEE SHEET 1 OF 11715-FH-0794.

THIS CAD DRAWING SHEETS 1,2,3,4 & 5 OF 5 SUPERSEDES THE MANUAL FLOW AND VALVE OPERATING NUMBERS DIAGRAMS, 11715-FH-0238 REV-17 AND 11715-FH-0798 REV-17 RESPECTIVELY.

REFERENCE DRAWINGS

NUMBER	TITLE
01. FOR ADDITIONAL REFERENCE DRAWINGS, SEE SHEET 1 OF 11715-FH-0794.	
02. 11715-FH-0794	FLOW/VOM DIAGRAM,COMPONENT COOLING WATER SYSTEM
03. 11715-FH-0798	FLOW/VOM DIAGRAM,SERVICE WATER SYSTEM
04. 11715-FH-0862A	FLOW/VOM DIAGRAM,COMPRESSED AIR SYSTEM
05. 11715-FH-0944A	FLOW/VOM DIAGRAM,RESIDUAL HEAT REMOVAL SYSTEM

BYPRODUCT DRAWINGS

1. 11715-CBM-0798, SH. 1 — 2SS CLASSIFICATION BOUNDARY DRAWING
2. DELETED
3. 11715-SPH-0798, SH. 1 — 2SS SYSTEM PRESSURE TESTING DRAWING

BYPRODUCT NOTES

REVISION DESCRIPTION

REVISED PER DCP 98-187
THIS DRAWING SUPERSEDES REV 24 ORIGINAL

VIRGINIA POWER
NORTH CAROLINA POWER
NUCLEAR ENGINEERING SERVICES
RICHMOND, VIRGINIA

FLOW/VALVE OPERATING NUMBERS DIAGRAM
COMPONENT COOLING WATER SYSTEM
NORTH ANNA POWER STATION UNIT 1
VIRGINIA POWER

DRAWN		DRAW SUPV	CAD NO. C:\user\dgn\11715FH0798.dgn
DRAWN JEF/CMG		DISPL ENGR	DRAWING NO. 11715-FH -0798 — REV. 38
CHKD MEV		LEAD ENGR	
DATE 11/7/94		SCALE NONE	UNLESS OTHERWISE NOTED — SH 1 OF 5

[BROOKS2]
24-SEP-1998 14:01
C:\user\dgn\11715FH0798.dgn

Facility:													Date of Exam:	Exam Level:
Tier	Group	K/A Category Points											Point Total
		K 1	K 2	K 3	K 4	K 5	K 6	A 1	A 2	A 3	A 4	G	
1. Emergency & Abnormal Plant Evolutions	1	1	3	2				5	5			0	16
	2	1	3	4				3	5			1	17
	3	0	0	0				0	3			0	3
	Tier Totals	2	6	6				8	13			1	36
2. Plant Systems	1	4	1	2	3	1	3	0	5	1	1	2	23
	2	3	0	4	1	3	1	2	4	1	1	0	20
	3	0	0	1	2	0	0	1	1	0	2	1	8
	Tier Totals	7	1	7	6	4	4	3	10	2	4	3	51

3. Generic Knowledge and Abilities	Cat 1	Cat 2	Cat 3	Cat 4	13
	4	2	2	5	

Note:
- Attempt to distribute topics among all K/A categories; select at least one topic from every K/A category within each tier.
- Actual point totals must match those specified in the table.
- Select topics from many systems; avoid selecting more than two or three K/A topics from a given system unless they relate to plant-specific priorities.
- Systems/evolutions within each group are identified on the associated outline.
- The shaded areas are not applicable to the category/tier.

DISTRIBUTION CODE
A070

Emergency and Abnormal Plant Evolutions – Tier 1/Group 1

E/APE # / Name / Safety Function	K 1	K 2	K 3	A 1	A 2	G	K/A Topic(s)	Imp.	Points
000005 Inoperable/Stuck Control Rod / I		.02					Breakers, relays, disconnects, and MCR switches	2.5	1
000015/17 RCP Malfunction / IV				.16			Low power reactor trip block status lights	3.2	1
BW/E09; CE/A13; W/E09&E10 Natural Circ./ IV					.1		Facility conditions and selection of appropriate E/AP procedure	3.1	1
000024 Emergency Boration / I	.02						Relationship between boron addition and reactor power	3.6	1
000026 Loss of Component Cooling Water/ VIII					.06		Length of time until component damage following loss of CC	2.8	1
000027 Pressurizer Pressure Control System Malfunction / III					.04		Tech Spec limits for RCS pressure	3.7	1
000040 (BW/E05; CE/E05; W/E12) Steam Line Rupture – Excessive Heat Transfer / IV				.18			Operate/monitor control rod position indications WRT MSLB	4.2	1
CE/A11; W/E08 RCS Overcooling – PTS / IV				.3			Desired operating results during abnormal/emergency situation	3.6	1
000051 Loss of Condenser Vacuum / IV					.02		Conditions requiring reactor and/or turbine trip	3.9	1
000055 Station Blackout / VI					.01		Existing valve position on a loss of instrument air system	3.4	1
000057 Loss of Vital AC Elec. Inst. Bus / VI				.04			Operate/monitor RWST & VCT valves WRT Vital Bus loss	3.5	1
000062 Loss of Nuclear Service Water / IV									
000067 Plant Fire On-site / IX				.08			Fire fighting equipment used on each class of fire	3.4	1
000068 (BW/A06) Control Room Evac. / VIII		.01					MCR evacuation as related to Aux Shutdown Panel layout	3.9	1
000069 (W/E14) Loss of CTMT Integrity / V			.01				Guidance contained in EOP for loss of CTMT integrity	3.8	1
000074 (W/E06&E07) Inad. Core Cooling / IV		.01					WRT safety systems/components (inst./signals/interlocks/etc.)	3.6	1
BW/E03 Inadequate Subcooling Margin / IV									
000076 High Reactor Coolant Activity / IX			.06				Actions contained in EOP for high RCS activity	3.2	1
BW/A02&A03 Loss of NNI-X/Y / VII									
K/A Category Totals:	1	3	2	5	5	0	Group Point Total:		16

Emergency and Abnormal Plant Evolutions – Tier 1/Group 2

E/APE # / Name / Safety Function	K 1	K 2	K 3	A 1	A 2	G	K/A Topic(s)	Imp.	Points
000001 Continuous Rod Withdrawal / I		.08					Control rod withdrawal WRT IRPI display lights/indications	3.1	1
000003 Dropped Control Rod / I		.05					WRT control rod drive power supply and logic circuits	2.5	1
000007 (BW/E02&E10; CE/E02) Reactor Trip – Stabilization – Recovery / I									
BW/A01 Plant Runback / I									
BW/A04 Turbine Trip / IV									
000008 Pressurizer Vapor Space Accident / III					.10		WRT high pressure injection valves and controllers	3.6	1
000009 Small Break LOCA / III				.10			Operate/monitor SPDS WRT SBLOCA	3.8	1
000011 Large Break LOCA / III			.02				Reasons for feedwater isolation during LBLOCA	3.5	1
W/E04 LOCA Outside Containment / III									
BW/E08; W/E03 LOCA Cooldown/Depress./IV				.3			Desired operating results during abnormal/emergency situations	3.7	1
W/E11 Loss of Emergency Coolant Recirc. / IV	.3						WRT annunciators/conditions indicating signals/remedial actions	3.6	1
W/E02 SI Termination / III					.1		WRT facility conditions and procedure selecting	3.3	1
000022 Loss of Reactor Coolant Makeup / II									
000025 Loss of RHR System / IV		.03					WRT service water or closed cooling water pumps	2.7	1
000029 Anticipated Transient w/o Scram / I					.07		Reactor trip breaker indicating lights	4.2	1
000032 Loss of Source Range NI / VII									
000033 Loss of Intermediate Range NI / VII					.09		Conditions which allow bypass of an IRNI level trip switch	3.4	1
000037 Steam Generator Tube Leak / III			.05				Actions contained in procedure for RM/inventory balances/SG tube	3.7	1
000038 Steam Generator Tube Rupture / III					.07		Plant conditions from survey of MCR indications	4.4	1
000054 (CE/E06) Loss of Main Feedwater / IV			.04				Actions contained in EOP for loss of main feedwater	4.4	1
BW/E04; W/E05 Inadequate Heat Transfer – Loss of Secondary Heat Sink / IV				.1			Operate/monitor components and functions of control & safety systems including instrumentation, signals, interlocks, failure modes	4.1	1
000058 Loss of DC Power / VI									
000059 Accidental Liquid RadWaste Rel. / IX			.04				Actions contained in EOP for accidental liquid waste release	3.8	1
000060 Accidental Gaseous Radwaste Rel./ IX									
000061 ARM System Alarms / VII						.1	Criteria which requires notification of plant personnel	2.5	1
W/E16 High Containment Radiation / IX									
CE/E09 Functional Recovery									
K/A Category Totals:	1	3	4	3	5	1	Group Point Total:		17

PWR RO Examination Outline
Emergency and Abnormal Plant Evolutions – Tier 1/Group 3

E/APE # / Name / Safety Function	K 1	K 2	K 3	A 1	A 2	G	K/A Topic(s)	Imp.	Points
000028 Pressurizer Level Malfunction / II					.09		PRZR level malf. WRT charging and letdown flow capacity	2.9	1
000036 (BW/A08) Fuel Handling Accident / VIII									
000056 Loss of Off-site Power / VI					.47		Determine proper operation of EDG load sequencer	3.8	1
000065 Loss of Instrument Air / VIII					.01		Cause and effect of low pressure instrument air alarm	2.9	1
BW/E13&E14 EOP Rules and Enclosures									
BW/A05 Emergency Diesel Actuation / VI									
BW/A07 Flooding / VIII									
CE/A16 Excess RCS Leakage / II									
W/E13 Steam Generator Over-pressure / IV									
W/E15 Containment Flooding / V									
K/A Category Totals:	0	0	0	0	3	0	Group Point Total:		3

Emergency and Abnormal Plant Evolutions – Tier 2/Group 1

System # / Name	K 1	K 2	K 3	K 4	K 5	K 6	A 1	A 2	A 3	A 4	G	K/A Topic(s)	Imp.	Points
001 Control Rod Drive						.03					.14	Reactor trip breakers including controls Immediate actions from memory	3.7 4.0	2
003 Reactor Coolant Pump				.04		.04						Adequate cooling of RCP motors and seals CTMT isolation affecting RCP operation	2.8 2.8	2
004 Chemical and Volume Control								.01		.03	.4	CVCS effect on high pressure 1/m plot system purpose and/or function	3.8 2.7 3.1	3
013 Engineered Safety Features Actuation			.03			.01						ESF malfunction effect on CTMT Sensor detector malfunction effect on ESF	4.3 2.7	2
015 Nuclear Instrumentation					.09			.04				In-core detector operation Control rod/xenon/boron effects on NIS	2.5 3.3	2
017 In-core Temperature Monitor				.01								Input to subcooling monitors	3.4	1
022 Containment Cooling		.01						.01				CTMT cooling fan power supplies Fan overcurrent impact & procedures to correct	3.0 2.5	2
025 Ice Condenser														
056 Condensate								.04				Loss of condensate pump impact on condensate system use procedures to correct problem	2.6	1
059 Main Feedwater	.04		.04									SGWLC impact on MFW system MFW failure and impact on the RCS system	3.4 3.6	2
061 Auxiliary/Emergency Feedwater	.04			.04				.01				AFW impact on RCS Prevention of AFW pump runout Startup of MFW during AFW operations	3.9 3.1 2.5	3
068 Liquid Radwaste	.07											Sources of liquid waste	2.7	1
071 Waste Gas Disposal	.06											Relationship between WG and RM system	3.1	1
072 Area Radiation Monitoring									.01			Changes in ventilation alignment	2.9	1
K/A Category Totals:	4	1	2	3	1	3	0	5	1	1	2	Group Point Total:		23

PWR RO Examination Outline
Emergency and Abnormal Plant Evolutions – Tier 2/Group 2

System # / Name	K 1	K 2	K 3	K 4	K 5	K 6	A 1	A 2	A 3	A 4	G	K/A Topic(s)	Imp.	Points
002 Reactor Coolant								.01				LOCA impact on RCS/use of procedure	4.3	1
006 Emergency Core Cooling					.08							Pumps in parallel WRT ECCS	2.9	1
010 Pressurizer Pressure Control						.01						Pressure detection malf. Impact on PRZR PCS	2.7	1
011 Pressurizer Level Control								.05				Loss of PRZR heaters WRT pressure	3.3	1
012 Reactor Protection					.01							DNB implications WRT RPS	3.3	1
014 Rod Position Indication			.02									RPIS malfunction impact WRT plant computer	2.5	1
016 Non-nuclear Instrumentation			.01									NNIS malfunction impact on RCS system	3.4	1
026 Containment Spray							.03					WRT predict/monitor CTMT sump level	3.5	1
029 Containment Purge	.05											WRT CTMT cleanup/recirc system	2.9	1
033 Spent Fuel Pool Cooling							.01					Predict impact on controls on SFP level	2.7	1
035 Steam Generator			.01									SG malfunction impact on RCS	4.4	1
039 Main and Reheat Steam	.06											Relationship between MS and steam dumps	3.1	1
055 Condenser Air Removal	.06											WRT process rad monitor system	2.6	1
062 AC Electrical Distribution								.11				Aligning standby equipment with correct emergency power supply	3.7	1
063 DC Electrical Distribution										.01		Major breakers and control power fuses	2.8	1
064 Emergency Diesel Generator								.16				LOOP during EDG full load testing	3.3	1
073 Process Radiation Monitoring					.02							Radiation changes WRT distance	2.5	1
075 Circulating Water			.07									CW loss impacts on ESFAS	3.4	1
079 Station Air				.01								Service air cross connect with instrument air	2.9	1
086 Fire Protection									.01			Starting mechanisms of FP pumps	2.9	1
K/A Category Totals:	3	0	4	1	3	1	2	4	1	1	0	Group Point Total:		20

PWR RO Examination Outline
Emergency and Abnormal Plant Evolutions – Tier 2/Group 3

System # / Name	K 1	K 2	K 3	K 4	K 5	K 6	A 1	A 2	A 3	A 4	G	K/A Topic(s)	Imp.	Points
005 Residual Heat Removal			.01									Loss/malfunction RHR impact on RCS	3.9	1
007 Pressurizer Relief/Quench Tank							.03					Monitoring quench tank temperature	2.6	1
008 Component Cooling Water								.05				Loss of instrument air on CC	3.3	1
027 Containment Iodine Removal										.01		Monitor.operate CIRS from MCR	3.3	1
028 Hydrogen Recombiner and Purge Control														
034 Fuel Handling Equipment														
041 Steam Dump/Turbine Bypass Control				.18								SDS design/interlocks which provide turbine trip	3.4	1
045 Main Turbine Generator				.39								Load limiters/runbacks	2.8	1
076 Service Water										.04		Operate/monitor emergency heat loads in MCR	3.5	1
078 Instrument Air														
103 Containment											.10	Ability to apply system limits and precautions	3.4	1
K/A Category Totals:	0	0	1	2	0	0	1	1	0	2	1	Group Point Total:		8

Facility:		Date of Exam:		Exam Level:
Category	**K/A #**	**Topic**	**Imp.**	**Points**
Conduct of Operations	2.1.3	Knowledge of shift turnover practices	3.0	1
	2.1.7	Evaluate/make operational judgements	3.7	1
	2.1.28	Knowledge of the purpose & function of system/component.	3.2	1
	2.1.30	Ability to locate/operate components/indications local	3.9	1
	2.1.			
	2.1.			
	Total			4
Equipment Control	2.2.1	Perform pre-startup procedures	3.7	1
	2.2.3	Differences between units	3.1	1
	2.2.			
	2.2.			
	2.2.			
	2.2.			
	Total			2
Radiation Control	2.3.4	Radiation exposure limits / contamination control	2.5	1
	2.3.5	Knowledge of use and function of personnel monitoring equipment	2.3	1 *
	2.3.			
	2.3.			
	2.3.			
	2.3.			
	Total			2
Emergency Procedures and Plan	2.4.9	Low power/SD implications in accident/strategies	3.3	1
	2.4.21	CSFSTs	3.7	1
	2.4.29	E-Plan	2.6	1
	2.4.46	Alarms consistent with plant conditions	3.5	1
	2.4.49	Actions requiring immediate actions	4.0	1
	2.4.			
	Total			5
Tier 1 Target Point Total (RO/SRO)				13/17

* *The only KA topic in catalog which references 10 CFR 55.41 Item 11*

U.S. Nuclear Regulatory Commission
North Anna Power Station
Written Examination

Applicant Information

Name:	**Region: II**
Date:	**North Anna Power Station - Units 1 & 2**
License Level: RO	**Reactor Type: Westinghouse**
Start Time:	**Finish Time:**

Instructions:

Use the answer sheets provided to document your answers. Staple this cover sheet on top of the answer sheets. The passing grade requires a final grade of at least 80.00 percent. Examination papers will be collected four hours after the examination starts.

Applicant Certification

All work done on this examination is my own. I have neither given nor received aid.

_____

Applicant's Signature

Results

Examination Value	_____ Points
Applicant's Score	_____ Points
Applicant's Grade	_____ Percent

DISTRIBUTION CODE
A070

1.
During troubleshooting on the rod control system at 100% power, a power cabinet 2BD non-urgent alarm was received. The Unit Supervisor directs the ALARM RESET push-button to be depressed, in accordance with a SNSOC approved test procedure. The Operator at the Controls mistakenly depresses the STARTUP RESET push-buttons. Which ONE of the following automatic responses is expected?

a) The reactor trip breakers will open.

b) All control rod bank low and low-low annunciators will illuminate.

c) Group B and D group step counters reset to zero steps, A and C group step counters remain at the all rods out position.

d) All IRPIs reset to zero and all rod bottom lights illuminate (actual rod position does not change).

KA: APE005.AK2.02 10CFR: 41.7/45.7

Level: Knowledge

Origin: NEW Applicability: BOTH

Reference: NCRODP-65-LP-3 Objective 10178

Correct Answer: b)

Plausible answers:

a) Based on simulator runs, the push-button causes many actions and alarms. Based on the number of deviating conditions which exist, reactor trip breakers opening is a plausible final outcome.

c) Since the internal alarm reset would clear the power cabinet 2BD non-urgent alarm, the misconception that the startup reset would only be applicable to the power cabinet 2BD cabinet is plausible.

d) The I is often mistaken for individual rod position indication interface instead of the correct internal alarm reset.

1. IRPI Drift - Upon a confirmed IRPI drift assistance from the I&C Techs is obtained. The Techs coordinate with the operating crew and perform their procedure

2. IRPI Failure - Upon a sudden failure of an IRPI indication, the CRO and SRO of that Unit check for the indication a malfunctioning rod by checks learned and referenced in the following abnormal procedures, such as a determining no reactivity anomaly, and no T_{avg}/T_{ref} deviation.

   - AP-1.1, Continuous Uncontrolled Rod Motion
   - AP-1.2, Dropped Rod
   - AP-1.3, Control Rod Out of Alignment

   After it is determined that the problem is isolated to the IRPI, then notify the I&C Techs. They will coordinate with the operating crew and perform their procedure

E. Startup Reset Pushbuttons - should ONLY be used when unit is shut down

1. If reset at power the following conditions would exist:

   a. ROD BANK LO/LO-LO LIMIT annunciators would alarm - since the rod position signal to the recorders goes to ZERO.

   b. RPI ROD BOT ROD DROP annunciator is disabled for control banks B, C, and D - since the P/A converter signal to the rod bottom bypass bistable indicates less than 35 steps.

   c. CMPTR ALARM PR TILT ROD DEV/SEQ annunciator will alarm since all the IRPIs will indicate greater than 10, 12, and 24 steps

2.
Which ONE of the following would initiate an automatic unit 2 reactor trip?

a) An overcurrent trip of the unit 2 "B" RCP with reactor power at 25% power.

b) An underfrequency condition of 49 hertz on the unit 2 "B" and "C" station service busses with unit 2 stable at 2% power.

c) With reactor power at 45%, the Reactor Operator manually secures the unit 2 "A" RCP due to high shaft vibrations.

d) The unit 2 Reactor Operator accidentally opens breaker 25A1, "A" SS alternate feeder from "A" RSST, with unit 2 at 12% power during a unit startup.

K/A: APE015/017.AA1.16 10CFR: 41.7/45.5/45.6

Level: Comprehension

Origin: NEW Applicability: BOTH

References: NCRODP-77A-LP-1 Objective 8964

Correct Answer: c)

Plausible distractors:

a) A common misconception is only a fault (not manual action) condition will initiate an automatic trip.

b) All three reactor coolant pumps would trip due to UF. However, low flow trips are at power trips and blocked less than 10%.

d) The 2A station service bus is powered from "A" RSST via breaker 25A1 until generator load is sufficiently high to transfer to the SST. RCP bus UV/UF requires 2/3 busses, but low flow on a single loop will cause a Rx trip above 30%.

2

13. Loss of flow reactor trip

    a. number of channels - 3 flow channels/loop and 1 device/RCP breaker

    b. channels to trip - 2/3 flows or 1/1 devices on 1/3 loops above P-8; 2/3 flows or 1/1 devices on 2/3 loops above P-7 and below P-8

    c. Setpoint: 90% or RCP breaker open

    d. TS bases: provide core protection to prevent DNB in event of one or more reactor coolant pumps is lost

    e. 1 loop trip blocked below P-8, 2 loop trip blocked below P-7

    f. No credit taken in safety analysis

14. Steam generator water level low/low reactor trip

    a. number of channels - 3/SG

    b. channels to trip - 2/3 on 1/3 SGs

    c. Setpoint: 18%

    d. TS bases: protection of core by preventing operation with steam generator level below minimum volume for heat removal capacity and allows for starting delays of auxiliary feedwater pumps and still maintain heat removal capability.

    e. Blocked (for that loop) when **both** loop stop valves shut

3.
Unit 1 was operating at 100% power when a loss of instrument air occurred. The crew tripped the reactor and performed 1-E-0, "Reactor Trip or Safety Injection," and 1-ES-0.1, "Reactor Trip Response."

The following conditions exist:
- All RCPs secured due to loss of component cooling water
- Containment instrument air pressure is 0 psig
- CRDM fans 1-HV-F-37A, E, and F are running
- The Superintendent of Operations has approved a natural circulation cooldown

Which ONE of the following is correct concerning the crew's subsequent procedure usage?

a) Proceed to 1-OP-3.2, "Unit Shutdown From Mode 3 to Mode 4."

b) Proceed directly to 1-ES-0.2B, Natural Circulation Cooldown without CRDM Fans."

c) Proceed to 1-ES-0.2A, "Natural Circulation Cooldown with CRDM Fans," and perform to completion.

d) Proceed to 1-ES-0.2A, "Natural Circulation Cooldown with CRDM Fans," then transition to 1-ES-0.2B, "Natural Circulation Cooldown without CRDM Fans" when directed.

K/A: EPEE09.EA2.1 10CFR: 43.5/45.13

Level: Comprehension

Origin: NEW Applicability: BOTH

References: NCRODP-92-LP-2 Objective 12492

Correct answer: d. Cooldown will be performed IAW 1-ES-0.2B due to no CRDM fans running (dampers closed due to no IA), but 1-ES-0.2A steps 1 – 5 are performed first to borate RCS and check CRDM fan status.

Plausible distractors:

a) One option for exiting ES-0.1 is to go to OP-3.2 to commence unit shutdown/cooldown.
b) Ultimately, ES-0.2B will be used to perform the cooldown.
c) Three CRDM fans are running; operator could forget that IA is required to maintain discharge dampers open.

depressurization is accomplished using normal plant operating procedures.

ES-0.2B NATURAL CIRCULATION COOLDOWN WITHOUT CRDM FANS

Distribute a copy of the procedure to each trainee.

Most of ES-0.2B is redundant to ES-0.2A. The focus will be on major differences between the two procedures.

BA. ES-0.2B Overview

1. Purpose of ES-0.2B is to provide guidance for operations personnel to perform a natural circulation RCS cooldown and depressurization with less than three CRDM fans in service.

2. ES-0.2B is applicable if the unit is initially in modes 1, 2, or 3.

3. Prerequisites for entry into ES-0.2B - ES-0.2B is entered from ES-0.2A "Natural Circulation Cooldown With CRDM Cooling Fans," ES-0.3, "Natural Circulation Cooldown With Steam Void in Vessel (with RVLIS)", ES-0.4, "Natural Circulation Cooldown with Steam Void in Vessel (without RVLIS)". However, in ALL cases the first five steps of ES-0.2A must have been completed. This will ensure that adequate shutdown margin has been established, the blender is set up to maintain adequate RCS boron concentration, and attempts to start CRDM fans have been made.

4. Transitions out of ES-0.2B:
   - If forced RCS flow is restored during ES-0.2B then go to the

4.
With a saturated mixed bed ion exchanger in service, 1-CC-TCV-106, CC return from NRHX, drifts 30% in the closed direction. Letdown temperature stabilizes at 126°F. Which ONE of the following plant responses is expected?

a) Rods step out slowly.

b) Rods step in slowly.

c) 1-CH-PCV-1145 (letdown pressure control valve) throttles open to maintain letdown pressure.

d) 1-CH-TCV-1143 (letdown IX temperature divert valve) automatically diverts letdown flow around the ion exchangers.

K/A: APE024.AK1.02 10CFR: 41.7/45.7

Level: Analysis, letdown response and application to IX theory, then subsequent application to reactor theory is required.

Origin: NEW Applicability: BOTH

References: NCRODP-41-LP-1 Objective 328

Correct Answer: a)

Plausible distractors:

b) If determination of temperature increase causes higher affinity for boron, this answer is plausible.

c) 1-CH-PCV-1145 throttles open to maintain pressure if temperature increases in a solid system.

d) The Chemical and Volume Control System ion exchanger bypass function occurs automatically at 136°F.

4

1. Located in IX alley in the Auxiliary Building

2. Mixed bed demineralizers

   a. LiOH resin $[Li]^+$ is cation $[OH]^-$ is anion

   b. Max design flow: 120 gpm

   c. Provides general purification of letdown.

      (1) Removes corrosion and wear products.

   d. Two demineralizers (normal lineup has only one in service at a time).

   e. The amount of boron held on the anion resin beads is dependent upon the temperature of the resin. As the temperature changes, the amount of boron that can be held on the beads changes, such that:

      (1) when temperature decreases, the anion beads are capable of holding more boron and will remove it from the fluid passing through the bed and in effect, a dilution takes place

      (2) when temperature increases, the anion beads cannot hold as much boron and it is rejected into the fluid passing through the bed and a boration takes place

      This effect has been experienced here at North Anna and during a similar event that occurred in June 1996 at the Sizewell B station.

   f. Industry Events

5.
The following conditions exist:

- Unit 1 is at 100% power.
- 1-CC-TV-116B ("B" RCP thermal barrier return) and its manual isolation valve, 1-CC-151, are closed to isolate a small thermal barrier leak on the "B" RCP.

Which ONE of the following events would allow unit 1 to continue operating for the longest period of time?

a) 1-CH-MOV-1381 (RCP seal return) closes and will not reopen; leakoff is maintained by the RV.

b) 1-CH-HCV-1186 (RCP seal injection flow) closes and will not reopen.

c) 1-CC-TV-106A (RCP "A" motor cooler CC supply) closes and will not reopen.

d) "C" RCP seal leakoff flow increases offscale high (both recorders) and the "RCP Seal Leak Hi Flow" alarm is lit.

K/A: APE026.AA2.06 10CFR: 43.5/45.13

Level: Comprehension, consequences of events and ability to recognize failure interrelations required.

Origin: NEW Applicability: BOTH

References: 1-AP-15, 33.1, 33.2 Objective 11101

Correct Answer: a)

Plausible distractors:

b) Requires an immediate trip due to a loss of all seal cooling to the "B" RCP.

c) Requires an eventual reactor trip due to loss of cooling to the "A" RCP motor and oil coolers.

d) Requires an immediate trip due to high leakoff flow and probable failure of the "C" RCP #1 seal.

STEP	ACTION/EXPECTED RESPONSE	RESPONSE NOT OBTAINED
*10.__	MONITOR RCP TEMPERATURES: • Motor bearing temperature - LESS THAN 195°F • Pump radial bearing temperature - LESS THAN 225°F • Stator winding temperature - LESS THAN 300°F	Do the following while continuing with this procedure: a) GO TO 1-E-0, REACTOR TRIP OR SAFETY INJECTION. b) WHEN Reactor is tripped, THEN stop affected RCPs.
11.__	ISOLATE LETDOWN BY CLOSING THE FOLLOWING VALVES: a) Letdown Orifice Isolation Valves: • 1-CH-HCV-1200A • 1-CH-HCV-1200B • 1-CH-HCV-1200C b) Letdown Isolation Valves: • 1-CH-LCV-1460A • 1-CH-LCV-1460B	Close 1-CH-LCV-1460A by placing control switch in ISO.
12.__	CHECK EXCESS LETDOWN - SECURED	Secure Excess Letdown using 1-OP-8.5, OPERATION OF EXCESS LETDOWN.
13.__	CLOSE 1-CH-FCV-1122, CHARGING FLOW CONTROL VALVE	Close 1-CH-MOV-1289A, Normal Charging Line Isolation Valve.
14.__	CLOSE 1-CH-MOV-1380, SEAL WATER RETURN ISOLATION VALVE	Close 1-CH-MOV-1381, Seal Water Return Isolation Valve.

STEP	ACTION/EXPECTED RESPONSE	RESPONSE NOT OBTAINED

* *

CAUTION:
- If at any time during this procedure an RCP Trip is required, then the affected RCP must be stopped and the No. 1 Seal Leakoff valve closed within 5 minutes. No. 1 Seal Leakoff is isolated after the RCP stops to avoid forcing debris into the No. 2 seal while the pump is rotating.
- An RCP that has been stopped because of a seal malfunction should not be restarted until the malfunction has been evaluated and corrected.

* *

1.	CHECK IF TRIP FOR RCP NO. 1 SEAL HIGH FLOW REQUIRED: • Affected RCP No. 1 Seal DP - LESS THAN 200 PSID OR • BOTH of the following conditions exist: • Affected RCP No. 1 Seal leakoff flow - 5.9 GPM OR GREATER AND • Annunciator Panel C-G7, RCP 1A-B-C SEAL LEAK HI FLOW - LIT	GO TO Step 3.

5

NUMBER	PROCEDURE TITLE	REVISION
1-AP-33.2	LOSS OF RCP SEAL COOLING (WITH TWO ATTACHMENTS)	7
		PAGE 1 of 5

PURPOSE

To provide instructions for recovering from a loss of RCP seal cooling.

INFORMATION ONLY

ENTRY CONDITIONS

This procedure is entered by transition from another plant procedure or when a loss of RCP seal cooling occurs to one or more RCPs as indicated by:

1. Loss of seal injection flow as indicated by:

   - Seal injection flow reading zero on 1-CH-FI-1124, 1127, and/or 1130, or
   - Annunciator Panel "C" G-6, RCP 1A-B-C LABYTH SEAL LO FLOW, LIT.

AND

2. Loss of Thermal Barrier Component Cooling flow as indicated by:

   - Component Cooling flow reading zero on 1-CC-FI-116A, 116B, and/or 116C, or
   - Annunciator Panel "C" C-4, RCP 1A-B-C THERM BARR CC HI/LO FLOW, LIT.

RECOMMENDED APPROVAL:	DATE	EFFECTIVE DATE
RECOMMENDED APPROVAL - ON FILE		07-08-98
APPROVAL: APPROVAL - ON FILE	DATE	

STEP	ACTION/EXPECTED RESPONSE	RESPONSE NOT OBTAINED

* *

CAUTION: To prevent potential damage from water hammer, seal cooling should be re-established in a controlled manner.

* *

1.__	VERIFY AFFECTED RCPs - STOPPED	Do the following: a) GO TO 1-E-0, REACTOR TRIP OR SAFETY INJECTION, while continuing with this procedure. b) Stop affected RCPs.
2.__	VERIFY RCP SEAL COOLING - ISOLATED:	
	a) 1-CH-MOV-1381, SEAL WATER RETURN OUTSIDE MOV - CLOSED	a) Close 1-CH-MOV-1381. IF 1-CH-MOV-1381 cannot be closed, THEN close 1-CH-MOV-1380. IF neither 1-CH-MOV-1381 or 1-CH-MOV-1380 can be closed electrically, THEN locally close 1-CH-MOV-1381.
	b) Affected RCP Seal Injection Isolation Valves - CLOSED: • 1-CH-318, 1A RCP Seal Injection Header Inlet Isol Valve • 1-CH-314, 1B RCP Seal Injection Header Inlet Isol Valve • 1-CH-310, 1C RCP Seal Injection Header Inlet Isol Valve	b) Locally close valve(s).

STEP	ACTION/EXPECTED RESPONSE	RESPONSE NOT OBTAINED
2.__	STOP AFFECTED RCP AS FOLLOWS:	
	a) GO TO 1-E-0, REACTOR TRIP OR SAFETY INJECTION, while continuing with this procedure	
	b) <u>WHEN</u> the Reactor is tripped, <u>THEN</u> stop the affected RCP	
	c) Verify loop flow indicates affected RCP is stopped	c) <u>WHEN</u> the RCP indicates stopped, <u>THEN</u> proceed with Step 2d.
	d) Close affected RCP No. 1 Seal Leakoff valve: • 1-CH-HCV-1303A for 1-RC-P-1A • 1-CH-HCV-1303B for 1-RC-P-1B • 1-CH-HCV-1303C for 1-RC-P-1C	
	e) GO TO Step 9	

6.
The following conditions exist on unit 1:

- Ten minutes ago a steam dump valve failed partially open at 2% power.
- The operating team has corrected the problem.
- Reactor power reached a maximum of 5.7% power range indication, currently stable at 2%.
- RCS pressure reduced to a minimum of 2175 psig and is recovering.
- RCS temperature reduced to a minimum of 543°F and is recovering.

Which ONE of the following identifies the **Tech Spec LCO** that has been exceeded?

a) TS-3.2.5, DNB parameters.

b) TS-2.1, Safety limits.

c) TS-3.1.1.5, Minimum Temperature for Criticality.

d) TS-3.4.9.1, RCS Pressure/Temperature limits (heatup/cooldown curves).

K/A: APE027.AA2.04 10CFR: 43.5/45.13

Level: Knowledge, a working knowledge and memorization of key RCS parameter thresholds is required.

Origin: NEW Applicability: BOTH

References: Technical Specifications Objective 9134

Correct Answer: a)

Plausible distractors:

b) A working knowledge of TS figure 2.1-1 is required to discount this as a plausible answer. At low power levels the pressure would need to be low and the temperature extremely high.

c) The lo-lo Tave (P12 intlk) setpoint is 543°F.

d) A working knowledge of the RCS cooldown limits curve is required to discount this as a plausible answer.

2.0 SAFETY LIMITS AND LIMITING SAFETY SYSTEM SETTINGS

21 SAFETY LIMITS

REACTOR CORE

2.1.1 The combination of THERMAL POWER, pressurizer pressure, and the highest operating loop coolant temperature (T_{avg}) shall not exceed the limits shown in Figures 2.1-1* for 3 loop operation and 2.1-2 and 2.1-3 for 2 loop operation.

APPLICABILITY: MODES 1 and 2.

ACTION:

Whenever the point defined by the combination of the highest operating loop average temperature and THERMAL POWER has exceeded the appropriate pressurizer pressure line, be in HOT STANDBY within 1 hour.

REACTOR COOLANT SYSTEM PRESSURE

2.1.2 The Reactor Coolant System pressure shall not exceed 2735 psig.

APPLICABILITY: MODES 1, 2, 3, 4 and 5.

ACTION:

MODES 1 and 2

Whenever the Reactor Coolant System pressure has exceeded 2735 psig, be in HOT STANDBY with the Reactor Coolant System pressure within its limit within 1 hour.

MODES 3, 4 and 5

Whenever the Reactor Coolant System pressure has exceeded 2735 psig, reduce the Reactor Coolant System pressure to within its limit within 5 minutes.

---

* For the period of operation until steam generator replacement, the combination of THERMAL POWER, pressurizer pressure, and the highest operating loop coolant temperature (T_{avg}) shall not exceed the limits shown in Figure 2.1-1a.

6

Nominal T_{avg} = 586.8°F

Nominal RCS flow = 289200 GPM

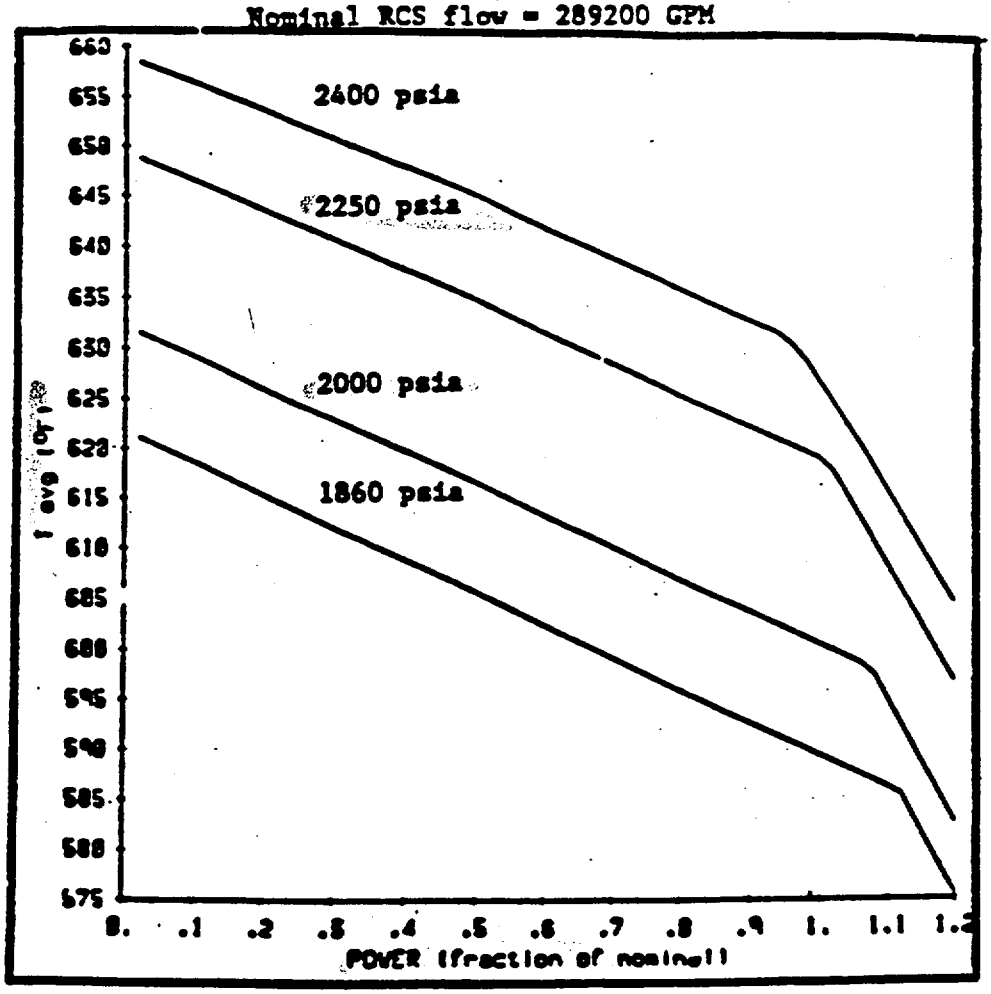

Figure 2.1-1 REACTOR CORE SAFETY LIMITS FOR THREE LOOP OPERATION

REACTIVITY CONTROL SYSTEMS

MINIMUM TEMPERATURE FOR CRITICALITY

LIMITING CONDITION FOR OPERATION

3.1.1.5 The Reactor Coolant System lowest operating loop temperature, T_{avg}, shall be $\geq$ 541°F.

APPLICABILITY: MODES 1 and 2#.

ACTION:

With a Reactor Coolant System operating loop temperature, T_{avg}, < 541°F, restore T_{avg} to within its limit within 15 minutes or be in HOT STANDBY within the next 15 minutes.

SURVEILLANCE REQUIREMENTS

4.1.1.5 The Reactor Coolant System temperature, T_{avg}, shall be determined to be $\geq$ 541°F:

a. Within 15 minutes prior to achieving reactor criticality, and

b. At least once per 30 minutes when the reactor is critical and the Reactor Coolant System T_{avg} is less than 547°F, with the $T_{avg} - T_{ref}$ Deviation Alarm not reset.

#With $K_{eff} \geq 1.0$.

DNB PARAMETERS

LIMITING CONDITION FOR OPERATION

3.2.5 The following DNB related parameters shall be maintained within the limits shown on Table 3.2-1:

a. Reactor Coolant System T_{avg}

b. Pressurizer Pressure

c. Reactor Coolant System Total Flow Rate

APPLICABILITY: MODE 1

ACTION:

With any of the above parameters exceeding its limit, restore the parameter to within its limit within 2 hours or reduce THERMAL POWER to less than 5% of RATED THERMAL POWER within the next 4 hours.

SURVEILLANCE REQUIREMENTS

4.2.5.1 Each of the parameters of Table 3.2-1 shall be verified to be within their limits at least once per 12 hours.

4.2.5.2 The Reactor Coolant System total flow rate shall be determined to be within its limit by measurement at least once per 18 months.

TABLE 3.2-1

DNB PARAMETERS

PARAMETER	LIMITS		
	3 Loops in Operation	2 Loops in Operation ** & Loop Stop Valves Open	2 Loops in Operation ** & Isolated Loop Stop Valves Closed
Reactor Coolant System T_{avg}	≤ 591°F		
Pressurizer Pressure	≥ 2205 psig *		
Reactor Coolant System Total Flow Rate	≥ 295,000 gpm		

* Limit not applicable during either a THERMAL POWER ramp increase in excess of 5% RATED THERMAL POWER per minute or a THERMAL POWER step increase in excess of 10% RATED THERMAL POWER.

** Values dependent on NRC approval of ECCS evaluation for these conditions.

6

REACTOR COOLANT SYSTEM

3/4.4.9 PRESSURE/TEMPERATURE LIMITS

REACTOR COOLANT SYSTEM

LIMITING CONDITION FOR OPERATION

3.4.9.1 The Reactor Coolant System (except the pressurizer) temperature and pressure shall be limited in accordance with the limit lines shown in Figures 3.4-2 and 3.4-3 during heatup, cooldown, and inservice leak and hydrostatic testing with:

a. A maximum heatup of 60°F in any one hour period.

b. A maximum cooldown of 100°F in any one hour period.

c. A maximum temperature change of less than or equal to 10°F in any one hour period during inservice hydrostatic and leak testing operations above the heatup and cooldown limit curves.

APPLICABILITY: At all times.

ACTION:

With any of the above limits exceeded, restore the temperature and/or pressure to within the limit within 30 minutes; perform an engineering evaluation to determine the effects of the out-of-limit condition on the structural integrity of the Reactor Coolant System; determine that the Reactor Coolant System remains acceptable for continued operations or be in at least HOT STANDBY within the next 6 hours and reduce the RCS Tavg and pressure to less than 200°F and 500 psig, respectively, within the following 30 hours.

SURVEILLANCE REQUIREMENTS

4.4.9.1.1 The Reactor Coolant System temperature and pressure shall be determined to be within the limits at least once per 30 minutes during system heatup, cooldown and inservice leak and hydrostatic testing operations.

4.4.9.1.2 The reactor vessel material irradiation surveillance specimens shall be removed and examined, to determine changes in material properties, at the intervals required by 10 CFR 50, Appendix H. The results of these examinations shall be used to update Figures 3.4-2 and 3.4-3.

6

Figure 3.4-3 — **North Anna Unit 1**
Reactor Coolant System Cooldown Limitations

Material Property Basis
Limiting Material: Circumferential Weld Seam
Limiting ART at 30.7 EFPY: 1/4-T, 162.9 F
3/4-T, 139.9 F

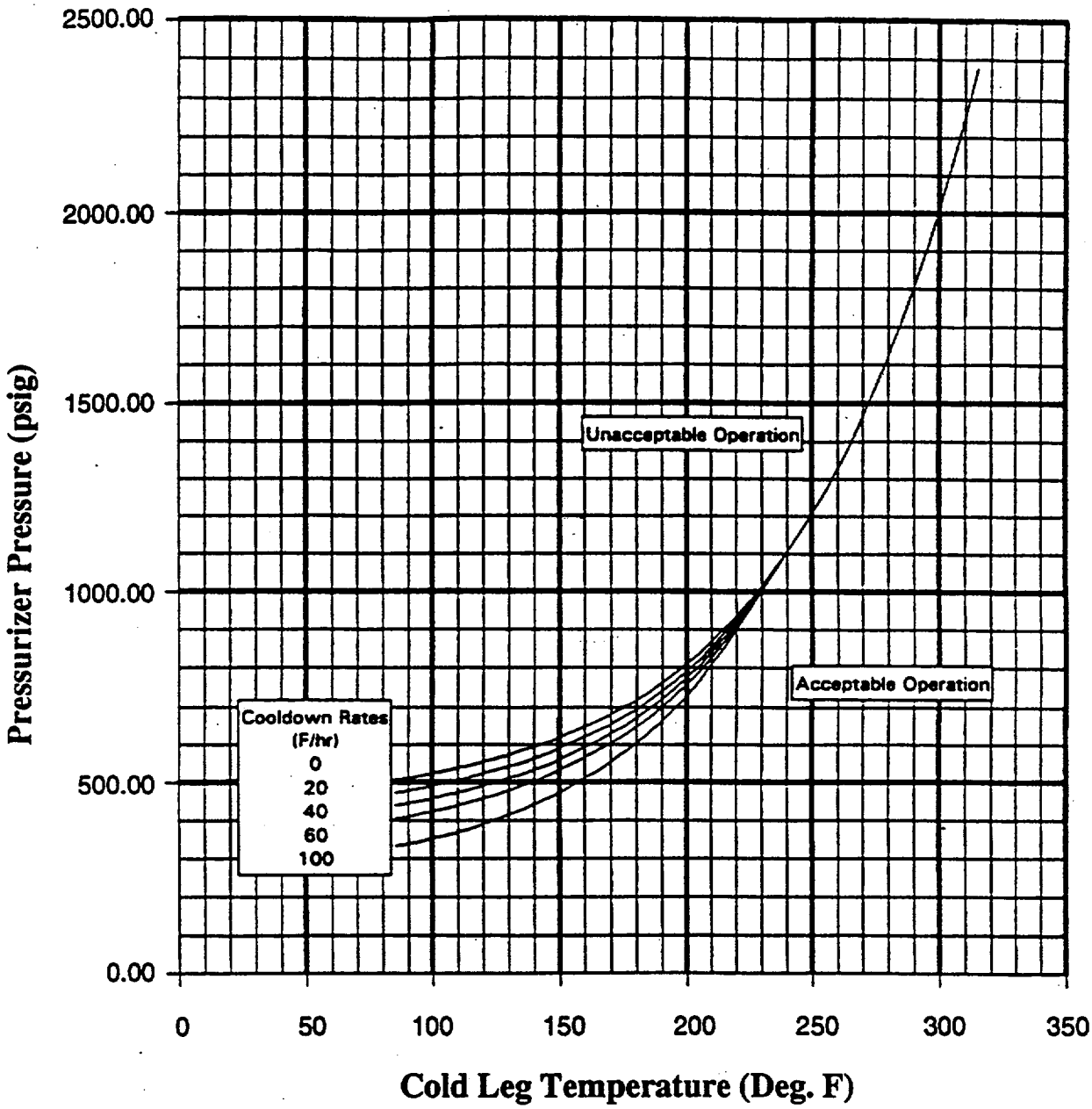

North Anna Unit 1 Reactor Coolant System Cooldown Limitations (Cooldown Rates up to 100 F/hr) Applicable for the First 30.7 EFPY (Without Margins for Instrumentation Errors)

7.
During 50% steady state reactor power operation, "A" steam generator PORV fails full open. Which ONE of the following describes the operation of the control rods in response to this event?

a) Control rods would move out.

b) Control rods would not move and power would not change.

c) Control rods would not move, power would increase.

d) The rods would trip into the core due to high steam line flow SI/Rx trip.

K/A: APE040.AA1.18 10CFR: 41.7/45.5/45.6

Level: Comprehension.

Origin: NEW Applicability: BOTH

References: NCRODP-65-LP-2 Objective 12007

Correct Answer: a)

Plausible distractors:

b) Control rods are in manual at power levels less than 15%.

c) Misconception of temperature/power are common below the point of adding heat.

d) A high steam flow will not occur since this takes 2/3 steam lines with high flow.

1. Rod Control System Purpose

The purpose of the Rod Control System is to CONTROL total CORE REACTIVITY in conjunction with the soluble boron concentration control of the CVCS. Together, the two reactivity control systems ensure the minimum required shutdown margin is maintained and core safety limits are not exceeded.

a. The reactivity of the reactor core is controlled by the Rod Control system and the Chemical and Volume Control System (CVCS). The Rod Control System compensates for changes in reactivity due to short term effects, while the CVCS compensates for LONG TERM effects.

(1) The control rods provide for relatively fast reactivity control, such as those resulting from fuel and moderator (water) temperature changes. These temperature changes are normally a result of changes in steam demand.

(a) When the Rod Control System is operated in automatic, T_{avg} will be maintained within 1.5°F (3.5°F when instrument error is considered) of T_{ref} by the automatic rod control unit.

(b) The automatic rod control unit is designed to control the reactor between 15 and 100 percent power, without reactor trip, steam dump, or pressurizer relief valve actuation, during the following design transients:

1) 10% step change in load, or

2) 5% per minute ramp load change.*{NLO OBJ 6504}*

Ask the trainees for the other NSS design criteria.

Answer: 50% load reject (40% is taken up by the steam dumps).

8.
Unit 1 was at 100% power when major steam line breaks occurred on "B" and "C" S/Gs. The following conditions exist:

- "B" and "C" S/Gs were isolated IAW 1-E-2
- "B" and "C" S/Gs W/R levels are now 0%
- Hot leg temperatures are increasing

After terminating safety injection IAW 1-FR-P.1, the crew is directed to control feed flow and dump steam to stabilize hot leg temperatures.

Which ONE of the following identifies the basis for performing these actions?

a) Prevent loss of RCS subcooling.

b) Prevent RCS repressurization.

c) Prevent exceeding PRZR cooldown limits.

d) Prevent tube failures in "B" and "C" S/Gs.

K/A: EPEE08.EA1.3 10CFR: 41.7/45.5/45.6

Level: Comprehension

Origin: NEW Applicability: BOTH

References: NCRODP-95-LP-12 Objective 12656

Correct Answer: b)

Plausible distractors:

a) A heatup will initiate a decrease in subcooling margin, initial plant cooldown needs to be assessed to discount this answer since a steam break alone cannot pose a sufficient loss of subcooling to necessitate reinitiation of SI.

c) PRZR could refill, but exceeding cooldown limit would not be a concern.

d) SG tube differential temperatures is a major concern in other type accidents (isolable FW/steam break, loss of heat sink).

17. STEP 16

a. Stabilizing RCS temperature makes it easier to control PRZR level and pressure while the plant is being realigned to normal condition and the next course of action is being decided.

b. If a secondary break had occurred earlier, the RCS could heat up (depending upon decay heat level and AFW flow rates) after the S/G dries out if no additional operator action is taken. Any heatup will result in an increase in PRZR level which will repressurize the RCS. Stabilizing RCS temperature by controlling feed flow and steam dump, will prevent this repressurization. [12656]

c. If RCS hot let temperatures are decreasing, the operator is instructed to verify that the actions of Step 2 have been performed before continuing with subsequent procedure steps. The actions in Step 2 try to terminate any cooldown in progress in order to alleviate any existing thermal stresses.

18. STEP 17

a. The injection of the cold SI accumulator water into the RCS should be avoided due to the additional thermal stresses it could cause. Since SI termination criteria are satisfied at this time, this is an indication that the accumulators are no longer required and they can be isolated.

19. STEP 18 (CONTINUOUS ACTION)

a. RCS depressurization can be performed concurrently with accumulator venting, provided RCS pressure is controlled to

9.
Which ONE of the following indications on condenser pressure recorders 1-CN-PR-101A and 101B, would require a reactor trip?

a) 5.5 inches Hg abs. with turbine power at 100%.

b) 4 inches Hg abs. with turbine power at 35%.

c) 4 inches Hg abs. with turbine power at 20%.

d) 3.5 inches Hg abs. with turbine power at 15%.

K/A: APE051.A2.02 10CFR: 43.5/45.13

Level: Knowledge of procedural thresholds is required.

Origin: NEW Applicability: BOTH

References: 1-AP-14 Objective 9877

Correct Answer: c)

Plausible distractors:

a) Pressure **greater than** 5.5 inches requires manual trip.

b) Above 30% power the setpoints change towards a lesser required vacuum; at 4 inches, lose C-9.

d) Pressure **greater than** 3.5 inches requires manual trip.

9

STEP	ACTION/EXPECTED RESPONSE	RESPONSE NOT OBTAINED
1.__	CHECK TURBINE LOAD CONTROL:	
	a) Verify Turbine valve position - OFF VALVE POSITION LIMITER	a) Take Turbine off Valve Position Limiter.
	b) Verify Turbine Load Control in IMP-IN.	b) Place Turbine Load Control in IMP-IN by depressing the IMP-IN pushbutton.
2.__	MANUALLY LOWER MAIN TURBINE LOAD UNTIL CONDENSER VACUUM - STABLE	
* 3.__	MONITOR CONDENSER PRESSURE - 3.5 INCHES HG ABS OR LESS	IF Reactor power is less than 30%, THEN GO TO 1-E-0, REACTOR TRIP OR SAFETY INJECTION while continuing with this procedure. IF Reactor power is 30% or greater AND Condenser pressure is greater than 5.5 inches, THEN GO TO 1-E-0, REACTOR TRIP OR SAFETY INJECTION while continuing with this procedure.
4.__	VERIFY 1-AS-MOV-100, CONDENSER VACUUM BREAKER - CLOSED	Manually close 1-AS-MOV-100, Condenser Vacuum Breaker.

10.
The following conditions exist:

- Unit 1 is at 30% power.
- 2-IA-C-1 is tagged for PMs.
- A total loss of the switchyard occurs.
- Both unit 1 EDGs fail to reenergize the emergency busses and the crew implements 1-ECA-0.0.
- The crew is directed to "Manually dump steam at maximum rate using S/G PORVs."

Which ONE of the following is correct concerning the initial crew response?

a) Direct a watchstander to open the S/G PORVs using the handwheels.

b) Fail open the S/G PORVs using the keyswitches in the cable vault.

c) Attempt to open S/G PORVs using controllers on benchboard.

d) Direct a watchstander to fail the IA to the S/G PORVs.

K/A: EPE055.EA2.01 10CFR: 43.5/45.13

Level: Comprehension.

Origin: NEW Applicability: BOTH

References: 1-ECA-0.0 Objective 11973

Correct Answer: c)

Plausible distractors:

a) This would be the response if the attempt to open the valves from the benchboard failed.

b) Keyswitches in the cable vault are provided for the S/G PORVs, but to fail them closed, not open.

d) The MS supply TVs to the turbine-driven AFW pump are fail open on loss of IA; this is directed by procedure and is an identified task.

NOTE: The following valves in Containment will close on loss of air.

1-CC-TV-106A, B, & C	CC to RCP A, B, & C
1-CC-TV-116A, B, & C	CC from Thermal Barrier A, B, & C
1-NS-LCV-101	CC makeup to NS System
1-CC-TV-102B, D, & F	CC from RCP A, B & C
1-CC-TV-101B	CC from Thermal Barriers
1-CC-TV-105A, B, & C	Chilled CC/SW from Air Recirc Coolers A, B, & C
1-SS-TV-108A, B, & C	Hot Leg Sample
1-SS-TV-109B & C	Cold Leg Sample
1-SS-TV-111A, B, & C	S/G Surface Sample
1-DA-TV-100B	Sump Pump Discharge
1-DG-TV-100B	PDTT Pump Discharge
1-VG-TV-100B	PDTT Vent
1-CV-TV-100	Hogger Suction
1-RC-HCV-1556A, B, & C	Loop Fill
1-RC-HCV-1557A, B, & C	Loop Drain
1-RC-HCV-1519B	PG to PRT
1-RC-HCV-1550	N_2 to PRT
1-RC-TV-1549	PRT Vent
1-RC-TV-1523	PRT Drain
1-RC-PCV-1455A & B	PRZR Spray
1-RC-PCV-1455C	PORV
1-RC-PCV-1456	PORV
1-RC-TV-1522A, B, & C	PG to RCP Seal Head Tank A, B, & C
1-RH-FCV-1605	RH Hx Bypass
1-CH-LCV-1460A & B	Letdown Isolation
1-CH-HCV-1311	Auxiliary Spray
1-CH-HCV-1200A, B, & C	Letdown Orifices
1-CH-HCV-1142	RH to Letdown
1-CH-HCV-1201	Excess Letdown Hx Inlet
1-CH-HCV-1137	Excess Letdown Hx Outlet
1-CH-HCV-1307	RCP Seal Bypass
1-SI-PCV-1846	N_2 Regulator
1-SI-HCV-1898	N_2 to PRT
1-SI-HCV-1853A, B, & C	N_2 to Accumulator A, B, & C
1-SI-HCV-100	N_2 to Accumulator A, B, & C
1-CH-TV-1204A	Letdown Isolation
1-RM-TV-100C	Sample to Containment Gas & Part Monitor 1-RM-RMS-159 and 1-RM-RMS-160

NOTE: The following valves in Containment will close on loss of air.

1-SI-HCV-1851A, B, & C	Makeup to Accumulator A, B, & C
1-SI-HCV-1850A & B	Accumulator Test A
1-SI-HCV-1850C & D	Accumulator Test B
1-SI-HCV-1850E & F	Accumulator Test C
1-SI-HCV-1852A, B, & C	Accumulator Drains A, B, & C
1-SI-TV-1842	Accumulator Test Isolations
1-BD-TV-100B & G	Steam Generator "A" Blowdown
1-BD-TV-100D & H	Steam Generator "B" Blowdown
1-BD-TV-100F & J	Steam Generator "C" Blowdown
1-HV-AOD-157A, B, & C	Containment Air Recirc Fan Dampers
1-HV-AOD-154A, B, C, D, E, & F	CRDM Fan Dampers

NOTE: The following valves in Containment will open on loss of air.

1-CC-TV-108A & B	NS TK HX CC Inlet
1-CC-TV-107A & B	NS TK HX CC Outlet
1-RC-HCV-1544	Vessel Flange Leakoff
1-RH-HCV-1758	RH Hx Outlet
1-CH-HCV-1310	Charging to Loop "B"
1-CH-HCV-1303A, B, & C	RCP Seal Leakoff A, B, & C
1-CH-HCV-1389	Excess Letdown 3-Way Valve Fails to VCT (Seal Water Return)

NOTE: The following valves in the AFPH will open on loss of air and depletion of the seismic air flasks.

1-FW-HCV-100A	AFW HCV Header to A SG
1-FW-HCV-100B	AFW HCV Header to B SG
1-FW-HCV-100C	AFW HCV Header to C SG
1-FW-PCV-159A	AFW Pumps to MOV Hdr Pressure Control Valve
1-FW-PCV-159B	AFW Pumps to HCV Hdr Pressure Control Valve

NOTE: The following valves in the Mechanical Equipment Room will close on loss of air.

1-FW-FCV-1478	A Main Feed Reg Valve
1-FW-FCV-1479	A Main Feed Reg Bypass Valve
1-FW-FCV-1488	B Main Feed Reg Valve
1-FW-FCV-1489	B Main Feed Reg Bypass Valve
1-FW-FCV-1498	C Main Feed Reg Valve
1-FW-FCV-1499	C Main Feed Reg Bypass Valve

NOTE: The following valves in the Auxiliary Building will close on loss of air.

1-CH-FCV-1113B	Boric Acid Blender to VCT Flow Control Valve
1-CH-FCV-1114A	PG to Blender Flow Control Valve
1-CH-FCV-1114B	Boric Acid Blender to VCT Inlet Hdr Flow Cont Vv

NOTE: The following valves in the Auxiliary Building will close on loss of air and depletion of the seismic air flask.

1-RM-TV-100A	Sample to Containment Gas & Part Monitor 1-RM-RMS-159 and 1-RM-RMS-160
1-RM-TV-100B	Sample to Containment Gas & Part Monitor 1-RM-RMS-159 and 1-RM-RMS-160
1-RM-TV-100D	Sample to Containment Gas & Part Monitor 1-RM-RMS-159 and 1-RM-RMS-160

NOTE: The following valves in the Auxiliary Building will open on loss of air.

1-CH-FCV-1122	Charging Flow Control Valve
1-CH-FCV-1113A	BA to Blender Flow Control Valve

NOTE: The following valves in the MSVH will open on loss of air.

1-MS-TV-111A	Turbine-Driven AFW Pump Steam Supply Valve
1-MS-TV-111B	Turbine-Driven AFW Pump Steam Supply Valve

NOTE: The following valves in the MSVH will close on loss of air.

1-MS-TV-101A	A Main Steam Trip Valve
1-MS-TV-101B	B Main Steam Trip Valve
1-MS-TV-101C	C Main Steam Trip Valve
1-MS-TV-113A	A MSTV Bypass Valve
1-MS-TV-113B	B MSTV Bypass Valve
1-MS-TV-113C	C MSTV Bypass Valve

NOTE: The following valves in the MSVH will close on loss of air and depletion of the seismic air flasks.

1-MS-PCV-101A	A SG Power Operated Relief Valve
1-MS-PCV-101B	B SG Power Operated Relief Valve
1-MS-PCV-101C	C SG Power Operated Relief Valve

11.
With unit 1 at 100% power, 1-CH-LT-1112 (VCT level) fails low due to loss of power. Which ONE of the following is the expected plant response for this transient?

a) VCT HI/LO LEVEL alarm will actuate.

b) Automatic VCT makeup actuates.

c) 1-CH-LCV-1115A diverts letdown flow to the gas stripper.

d) Charging pump suction MOVs swap from the VCT to the RWST.

K/A: APE057.A1.04 10CFR: 41.7/45.5/45.6

Level: Comprehension, recognition of how a loss of power will affect the VCT system is required.

Origin: NEW Applicability: BOTH

References: NCRODP-41-LP-1 Objective 237

Correct Answer: a)

Plausible distractors:

b) The makeup function comes from 1-CH-LT-1115.

c) This occurs on a high level, not a low level.

d) 2/2 transmitters are required for swapover, not 1/2

11

[237] Describe the response of the volume control tank level control subsystem to each of the following level instrumentation failures.

- 1-CH-LT-1112 fails high

  VCT high level alarm. LCV-1115A diverts to the Boron Recovery System. VCT level decreases until auto make-up commences. Level should then increase as auto make-up flow exceeds the divert flow rate. Charging pump suction will not swap to the RWST if a subsequent VCT low level occurs.

- 1-CH-LT-1112 fails low

  VCT low level alarm

- 1-CH-LT-1115 fails high

  VCT high level alarm. Full divert of LCV-1115A to Boron Recovery System. VCT level will decrease and auto make-up will not occur. Auto swap over to RWST will not occur at 5%. Charging pump suction will be lost as VCT empties.

- 1-CH-LT-1115 fails low

  VCT low level alarm. Auto make-up will commence and will not stop in auto. Actual VCT level as sensed on LT-1112 will increase and LCV-1115A will modulate open as level increases as sensed on LT-1112. The VCT will fill up relieve on high pressure to the HLLWT's.

---

2. Recall IC for 100% power.
3. Fail 1-CH-LT-1112 to 100% and discuss the system's response.
4. Fail 1-CH-LT-1112 to zero and discuss the system's response.
5. Fail 1-CH-LT-1115 to 100% and discuss the system's response.
6. Fail 1-CH-LT-1115 to zero and discuss the system's response.

---

[507] Describe the response of the Chemical and Volume Control System to each of the following conditions.

- Undervoltage on the respective power supply bus

  B and C_{ALT} charging pump will "ride the bus" on an undervoltage condition on the J bus.

  C_{NORM} will "ride the bus" on an undervoltage condition on H bus ASSUMING that the A charging pump trips on UV/DV within 1 second of the UV/DV.

12.
A fire has been confirmed in the unit 1 Emergency Switchgear Room.

Which ONE of the following actions should be taken to extinguish the fire?

a) Locally actuate the halon bottles located in the fan room on the unit 1 end of the control room.

b) Actuate the halon pull station in the unit 1 Turbine Building basement (at the entrance to the unit 2 ESGR).

c) Rotate the key switch on the halon control panel in the unit 1 Turbine Building basement near the elevator.

d) Depress the HALON EMERGENCY SWGR ROOM ACTUATE pushbutton on the Fire Protection panel near the unit 1 control room door.

K/A: APE067.AA1.08 10CFR: 41.7/45.5/45.6

Level: Knowledge

Origin: NEW Applicability: BOTH

References: 1-AR-34 Objective 6639

Correct Answer: d)

Plausible distractors:

a) Misconception concerning the area served by the halon bottles in the unit 1 control room fan room.

b) Misconception concerning the actuation accomplished by the pull station in the unit 1 Turbine Bldg. basement

c) The panel is used for addressing halon system alarms or for aborting a halon dump.

12

NORTH ANNA POWER STATION
UNIT #1

F 04

ZONE 1 LOOP ALARM

1.0 Other Indications:

1.1 Local buzzer sounding.
1.2 Remote alarm #1 sounding.
1.3 General Trouble LED on.
1.4 Alarm LED on.

2.0 Probable Cause:

2.1 Fire detected by zone 1 loop.

3.0 Operator Action:

3.1 Silence alarm.
3.2 Reset panel.
3.3 Investigate cause of alarm.
3.4 IF actual fire, THEN go to 0-FCA-0, Fire Protection-Operations Response.

NOTE: There is a 60 second time delay before the bottles will actually dump following initiation from the Control Room or Pull Station, but strobe lights and horns will actuate immediately. There are no lights, horns, or warning if actuated from the local manual release on the bottles without an electrical initiation signal from the control room or pull station.

3.5 IF an Emergency Switchgear Halon dump is required, THEN do the following:

a. Dump Halon by doing at least one of the following:

- Pull down window of Local Pull Station, THEN push button 1-FP-PB-01 (by Unit 2 Aux Shutdown Panel).
- At 1-EI-CB-97, Fire Protection Panel in Control Room, depress "HALON" "EMERGENCY" "SWGR. ROOM" ACTUATE pushbutton.
- Remove pin from one of the following bottles MANUAL/PNEUMATIC ACTUATORS AND pull lever down:
  - 1-FP-CYL-8A, 1-FP-514
  - 1-FP-CYL-8B, 1-FP-515

13.
During a fire in the main control room, swapover for the unit 2 station service busses failed. All unit 2 station service busses are deenergized. All emergency busses are energized by off-site power. Which ONE of the following identifies the heater capacity available at the unit 2 auxiliary shutdown panel? Assume each available heater group is providing the minimum capacity required by Tech Specs.

a) 125 KW

b) 250 KW

c) 270 KW

d) 540 KW

K/A: APE068.K2.01 10CFR: 41.7/45.7

Level: Knowledge

Origin: NEW Applicability: BOTH

References: TS-3.4.4, NCRODP-74-LP-1 Objective 8851

Correct Answer: b)

Plausible distractors:

a) The Tech Spec minimum capacity is 125 KW

c) The design capacity for one backup group of heaters is 270 KW

d) The design capacity for two backup groups of heaters is 540 KW

REACTOR COOLANT SYSTEM

PRESSURIZER

LIMITING CONDITION FOR OPERATION

3.4.4 The pressurizer shall be OPERABLE with at least 125 kw of pressurizer heaters and a water volume of less than or equal to 1240 cubic feet.

APPLICABILITY: MODES 1, 2, and 3.

ACTION:

a. With the pressurizer inoperable due to an inoperable emergency power supply for the pressurizer heaters either restore the inoperable emergency power supply within 72 hours or be in at least HOT STANDBY within the next 6 hours and in HOT SHUTDOWN within the following 6 hours. 2E

b. With the pressurizer otherwise inoperable, be in at least HOT STANDBY with the reactor trip breakers open within 6 hours and in HOT SHUTDOWN within the following 6 hours.

SURVEILLANCE REQUIREMENTS

4.4.4.1 The pressurizer water volume shall be determined to be within its limit at least once per 12 hours. 2E

h. Each group of backup heaters was designed to provide 270 kW.

(1) As installed they provide 269 kW with some variance between heater banks.

(2) These heaters are normally de-energized (if in auto), but are turned on when pressure decreases well below the desired setpoint pressure.

(3) The control signal for these heaters is provided by the pressure control subsystem.

i. The Pzr level control subsystem de-energizes all the heaters if pressurizer level reaches 15 percent, where the heaters would become uncovered.

j. The heaters are normally controlled from the MCB:

(1) **under emergency conditions two of the backup groups (1,4)**, which receive power from the emergency buses, can be controlled from the Auxiliary Shutdown Panel.

k. Total power consumed by all pressurizer heaters can be displayed by the P-250 Computer.

l. Control Group (Proportional heaters)

14.
With unit 1 at 100% power, multiple main steam line breaks occurred inside containment. Reactor trip, SI and CDA all actuated automatically. Phase B containment isolation failed to occur.

Which ONE of the following explains why the crew is directed to manually close the phase B valves?

a. Reduce the possibility of a release path from containment.

b. Reduce the heat loading on component cooling water.

c. Isolate cooling water to the RCPs, which were stopped due to loss of subcooling.

d. Isolate instrument air to prevent spurious repositioning of valves in containment.

K/A: APE069.K3.01 10CFR: 41.5/41.10/45.6/45.13

Level: Knowledge

Origin: NEW Applicability: BOTH

References: NCRODP-92-LP-2 Objective 5753

Correct Answer: a)

Plausible distractors:

b) CDA isolates cooling water to the CCW heat exchangers.

c) RCPs are secured to preclude overheating of seals and motors in anticipation of loss of cooling water.

d) Instrument Air is isolated to preclude a release path.

L. Check if CDA is required.

1. If containment pressure exceeds the setpoint CDA is initiated to mitigate the containment pressure transient and to actuate a phase-B containment isolation to close additional potential release paths from the containment.

2. Since component cooling water is lost to RCPs, they are secured to prevent overheating.

3. If containment pressure has exceeded, then decreased below the setpoint, the decrease may be due to spray actuation or passive heat sink, therefore CDA should still be initiated.

M. Phase-B isolation verification attachment

1. Phase-B isolation trip valves are checked closed.

2. Quench spray pumps are started and aligned.

3. Service water is isolated to CC heat exchangers and aligned to RSHXs.

4. Recirculation spray pumps are verified to be running.

   a. If the time delay has not been satisfied, then wait; do not start the RS pumps early.

5. Instrument air compressor 1-IA-C-2A is manually stopped to ensure the 1H bus is not overloaded.

6. Safeguards panel operations are repeated for the J-train, except for

15.
During 50% reactor power operation, which ONE of the following events would place the unit closer to a departure from nucleate boiling (DNB) condition?

a) Control group pressurizer heaters fail to maximum gating.

b) Selected 1st stage impulse pressure fails low.

c) Median/Hi select Tave fails low.

d) PRZR pressure control channel 1-RC-PT-1445 fails low.

K/A: SYS012.K5.01 10CFR: 41.5

Level: Comprehension

Origin: NEW Applicability: Both

References: NCRODP-90H.3-LP-2 Objective 13961

Correct Answer: c)

Plausible Distractors:

a. Pressure increases, farther from DNB.

b. Rods step in at maximum rate, lowering temperature, farther from DNB.

d. Fails low, no affect on PORV, DNB margin is unaffected.

C. Parameters Affecting CHF and DNBR

There are many parameters which affect either the value of the CHF or DNBR.

1. Operator - Controlled parameters

The most important plant parameters which a reactor operator can observe on his/her instrumentation or affect by his/her actions are:

-Reactor power
-Coolant flow rate
-RCS temperature
-RCS pressure

Consider how changes in each of these parameters, separately, affect CHF and DNBR.

a. Reactor power

An increase in reactor power results in increased actual local heat flux, and brings the local conditions closer to DNB. Also, an increase in reactor power normally applies an increase in T_H. As T_H increases, the minimum CHF decreases.

Have trainees: Compare RCS flow limits (DNB Technical Specification 2.3.5, Unit 1 and 2). Unit 2 Technical Specification change 152 allows lower flow limits due to S/G tube plugging.

b. Coolant flow rate

CHF increases with increasing coolant flow rate because the higher velocity is more effective in sweeping away steam bubbles from the cladding. Greater coolant flow also reduces the coolant enthalpy rise which increases DNBR.

c. RCS temperature

If the RCS pressure is held constant, a decrease in coolant temperature will result in increased subcooling. Since steam bubbles will form less easily and quench more rapidly in highly subcooled water than in water near the boiling point, the removal of steam bubbles from the clad surface is improved. Therefore, the CHF will increase as subcooling increases.

d. RCS pressure

If RCS temperature is held constant and pressure increases, then the subcooling increases, and therefore the CHF increases.

e. Technical Specifications

Technical Specification 3.2.5 places limits on DNB related parameters.

16.
The operating team entered 1-FR-C.1. All attempts to establish high head flow were unsuccessful. Core exit thermocouples are 820°F and increasing slowly.

Which ONE of the following methods is required to respond to the core cooling challenge?

a) Enter the Severe Accident Mitigation Guidelines.

b) Open available PRZR PORVs to lower RCS pressure to the SI accumulator and LHSI injection pressures.

c) Open the PRZR and reactor head vent SOVs to vent the hard bubble and allow natural circulation to progress.

d) Depressurize all intact steam generators to 120 psig to allow RCS depressurization to the SI accumulator and LHSI injection pressures.

K/A: EPEE06.K2.01 10CFR: 41.7/45.7

Level: Knowledge.

Origin: NEW Applicability: BOTH

References:NCRODP-95-LP-4 Objective 11671

Correct Answer: d)

Plausible distractors:

a) Although the situation is critical, it does not meet the 1200°F transition criteria.

b) Meets the intent to lower pressure but action initiates a loss of RCS inventory to accomplish.

c) Meets the intent to lower pressure but action initiates a loss of RCS inventory to accomplish.

19. STEP 11

a. The rapid secondary depressurization has been shown to be the most effective way to reduce RCS pressure. RCS pressure must be reduced in order for the SI accumulators and low-head SI pumps to inject.

b. The operator should stop the secondary depressurization at a SG pressure of 120 psig and when the RCS hot leg temperatures fall below 355°F.

(1) Depressurization is stopped when SG pressures decrease to 120 psig to prevent accumulator nitrogen injection into the RCS.

(a) Nitrogen could collect in the RCS high points and produce either a "hard" PZR bubble or cause gas binding and reduce heat transfer in the SG tubes. [11671]

c. If not successful the operator is directed to Step 19 to provide temporary cooling.

20. STEPS 12 & 13

a. SI accumulators are isolated to prevent nitrogen injection into the RCS when the RCS hot leg temperature criterion is satisfied (two RTDs are used to ensure that one RTD is not giving an erroneous reading).

17.
Following a reactor trip and safety injection, indications of extensive failed fuel exist. Which ONE of the following criteria would require the operating crew to begin using conservative setpoints due to the potential unreliability of installed instrumentation?

a) RCS specific activity is 150/Ē microcuries/gm

b) Recirc spray sump level is two feet.

c) RCS subcooling indicates 20°F on ICCM.

d) Containment high range monitors indicate 1.3E+5 R/hr.

K/A: APE076.K3.06 10CFR: 41.5/41.10/45.6/45.13

Level: Knowledge, recognizing the implications of accident indications is required to implement proper procedural setpoints

Origin: NEW Applicability: BOTH

References: NCRODP-92-LP-2 Objective 12450

Correct Answer: d)

Plausible distractors:

a) This exceeds the T.S. threshold which requires cooldown of the RCS to less than 500 degrees.

b) This exceeds the minimum sump level to start RS pumps.

c) This is the value which requires RCP trip following SBLOCA.

B. Adverse Containment Criteria

1. The purpose of the criteria is to ensure that instrument errors associated with adverse containment conditions are considered in addition to the normal instrument uncertainties used in the ERGs.

2. Adverse containment criteria are denoted within the procedure by the numbers located within brackets. Example: [25%]

3. Adverse containment criteria are required to be used if:

   a. containment pressure is >20 psia - this addresses potential concerns to instrumentation caused by high pressure and temperature.

   b. 10^{5} R/hr - addresses radiation damage.

4. Adverse containment criteria discontinuation:

   a. Pressure - Condition is not permanent. If pressure decreases below 20 psia adverse conditions do <u>not</u> exist.

   b. Radiation - once condition is met it <u>is</u> permanent since radiation damage is cumulative.

   c. Inform the unit supervisor/procedure reader when conditions are met to enter/exit adverse containment criteria. [STA can assist in monitoring for adverse containment conditions since they will be monitoring these parameters a part of the CSF's.]

C. Reactor Coolant Pump Trip Criteria

18.
With unit 1 operating at 100% power, the median Tave output fails to 578°F. If "D" bank started at 212 steps, which ONE of the following approximates how many ***seconds*** would elapse to reach the all rods out position on "D" bank indications? (Assume rod motion does not affect RCS temperature or reactor power).

a) 11.9

b) 13.7

c) 97.5

d) 112.5

K/A: APE001.AK2.08 10CFR: 41.7/45.7

Level: Analysis.

Origin: NEW Applicability: BOTH

References: NCRODP-65-LP-2 Objective 12007

Correct Answer: d) [Program Tave = 580.8°F; Delta-T = 580.8 – 578 = 2.8°F; Change in rod height = all rods out – current rod height = 227 – 212 = 15 steps; Rod speed = 8 steps/minute (from graph); Elapsed time = Change in rod height/Rod speed = 15 steps/8 steps per minute = 112.5 seconds.]

Plausible distractors:

a) Using Tave program of 582.8 (previous value), rods will move at 65.6 steps/min.; dividing 65.6 into the difference between a previous all rods out position of 225 and the initial rod height of 212 yields the incorrect answer.

b) Using Tave program of 582.8 (previous value), rods will move at 65.6 steps/min.; dividing 65.6 into the difference between the current all rods out value of 227 and the initial rod height of 212 yields the incorrect answer.

c) Using current Tave program of 580.8, rods will move at 8 steps/ min.; dividing this into the difference between an all rods out of 225 and the initial rod height of 212 yields the incorrect answer.

(a) When the reactor is operated with a constant average temperature, the volume of water in the RCS remains relatively constant. Therefore, a relatively small pressurizer can be used with this type of control program. Additionally, since the average moderator temperature does not change with power, the moderator temperature coefficient will not contribute to the total power coefficient. Thus, the need for control reactivity is reduced. An inherent disadvantage with a constant T_{avg} program is the large fluctuation in steam generator pressure that results from changing T_c. Steam generator pressure is a maximum at 0 percent power and a minimum at 100 percent power.

(b) A constant cold leg temperature program would allow a constant secondary system pressure but result in large variations in RCS average temperature and in RCS water volume. Thus, a larger pressurizer would be required. Also, T_H would greatly increase with power. A greater RCS pressure would be required to maintain RCS subcooling.

(4) <u>North Anna Power Station has chosen a compromise between the two temperature control programs.</u>

(a) The average primary temperature is varied from 547°F at 0 percent power to 580.8°F at 100 percent power.

(b) The resultant variance in T_c causes steam generator pressure to vary from approximately 1005 psig at 0 percent power to approximately 800 psig at 100

2. The error signals generated by the power mismatch circuit and the temperature comparison circuits are combined in a summing network to produce a total error signal.

   a. This total error signal is used in the rod control program to control rod speed and direction.

      NOTE - $T_{avg} > T_{ref}$ results in control rod insertion. $T_{avg} < T_{ref}$ results in control rod withdrawal.

      (1) When T_{avg} varies from T_{ref} by more than 1.5°F (increasing), the rod control program sends a signal to the Rod Control system logic cabinet to begin rod motion.
      Once rod motion has begun, the T_{ave}-T_{ref} difference must be reduced to 1.0°F before the program signal goes to zero, and rod motion stops (lockup/reset).

         NOTE - With the difference between T_{ave} and T_{ref} less than 1.5°F (increasing) or less than 1.0°F (decreasing), actual rod speed is zero. However, the indicated rod speed on the benchboard meter is never less than eight steps/minute.

      (2) The speed of the control rods is a function of the difference between T_{avg} and T_{ref}.

         (a) When the difference is greater than either 1.5°F (increasing) or 1.0°F decreasing), but less than 3°F (increasing or decreasing), the rod speed is fixed at eight steps per minute (spm).

(b) Between 3°F and 5°F difference (increasing or decreasing), the rod speed linearly increases from eight spm to 72 spm.

(c) The rod speed is fixed at 72 spm above a difference of 5°F.

1) A T_{avg}/T_{ref} DEVIATION alarm (window 1B-A7) will actuate when median-select T_{avg} differs from T_{ref} by more than ± 5°F. The alarm requires immediate attention above 15% power and could be indicative of:

a) continuous rod motion,

b) large change in steam demand,

c) steam generator level control problem,

d) channel test, or failure.

b. A 3°F deadband is provided in the rod control program to prevent continuous stepping of the control rods.

c. A 0.5°F lockup region is included in the program to prevent bistable chattering, when the error signal is near the end of the deadband. *{NLO OBJ 6512}*

3. The command signals for automatic and manual rod control must pass through reactor protection system interlocks before withdrawal of the control

Note: Normally the failure of a single $\Delta T/T_{avg}$ RTD will not cause a response in the Rod Control System due to the operation of the Median-Select Circuit. The following failures describe an event in which the output of the median-select circuit fails.

- When T_{avg} fails low a large temperature error is sensed between T_{avg} and T_{ref}.
- This temperature error will be sent to the summer of error signals.
- Since impulse pressure and N-44 are still matched, the temperature error will be initially sent to the rods and rods will begin to withdraw at maximum speed.
- As rods withdraw ACTUAL T_{avg} increases until the first reactor protection setpoint is reached, or the rods are fully withdrawn.

- When T_{avg} fails high a large temperature error is sensed between T_{avg} and T_{ref}.
- This temperature error will be sent to the summer of error signals.
- Since impulse pressure and N-44 are still matched, the temperature error will be initially sent to the rods and rods will begin to drive in at maximum speed.
- As rods are inserted, ACTUAL T_{avg} decreases.
- Rods continue to insert until the first reactor protection setpoint is reached.

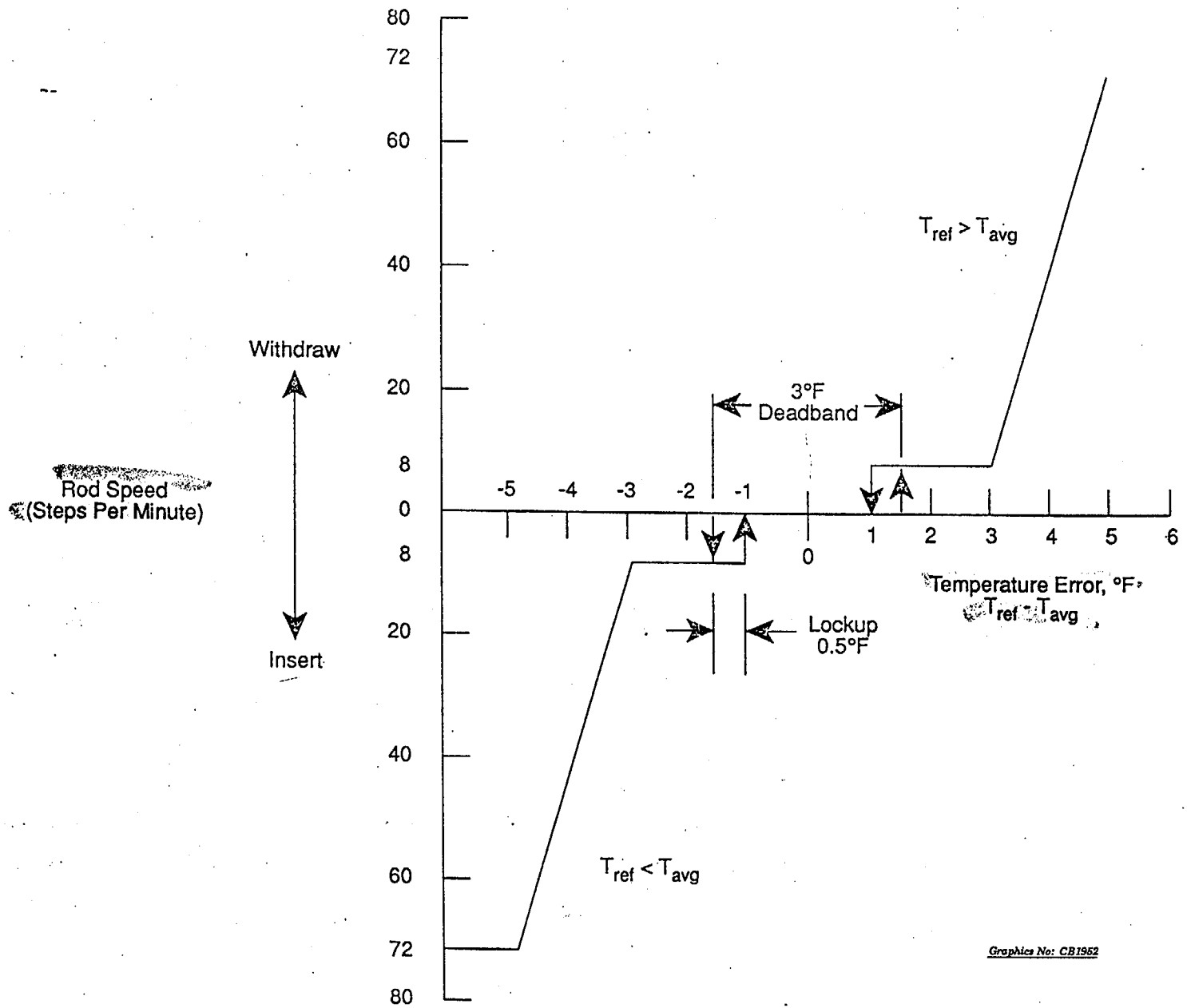

CB1952
CB1952A

FIGURE 65-9
ROD CONTROL PROGRAM
08-30-91

UNIT 1 CONTROL ROD FULLY WITHDRAWN POSITION AND SETPOINT VALUES FOR C-11, CONTROL BANK D WITHDRAWAL LIMIT

Comparator Card TC-409K (C8-535)

Date	Fully Withdrawn Position (Steps)	Trip Setpoint (VDC)	Acceptable Range	Reset Setpoint (VDC)	Acceptable Range	Initials (Engr)
1-27-93	228	9.913	9.863 to 9.963	9.813	9.763 to 9.863	APM
3-12-93	225	9.783	9.733 to 9.833	9.683	9.633 to 9.733	APM
2-20-96	225	9.763	9.713 to 9.813	9.663	9.613 to 9.713	RBM
9-29-98	227	9.850	9.800 to 9.900	9.750	9.700 to 9.800	SAS
			to		to	
			to		to	
			to		to	
			to		to	
			to		to	
			to		to	
			to		to	
			to		to	
			to		to	
			to		to	
			to		to	
			to		to	
			to		to	
			to		to	
			to		to	
			to		to	
			to		to	
			to		to	
			to		to	
			to		to	
			to		to	

19.
During recovery of a dropped rod, an urgent failure alarm is received immediately after initiating rod motion on the dropped rod. Which ONE of the following identifies the cause of this alarm?

a) Logic signals between slave and master cycler not properly coordinated.

b) Power to both the stationary and moveable coils is zero at the same time.

c) Disagreement between individual rod position indicators and group step counters.

d) The lift coils of the remaining rods in the affected bank are deenergized.

K/A: APE003.K2.05 10CFR: 41.7/45.7

Level: Knowledge, memory recognition of procedural note is required.

Origin: NEW Applicability: BOTH

References: 1-AP-1.2 Objective 6518

Correct Answer: d)

Plausible distractors:

a. This describes one cause of a logic cabinet urgent failure.

b. This describes one cause of a power cabinet urgent failure.

c. This will generate a "Computer Alarm/PR Tilt/Rod Dev/Seq" alarm.

* *

CAUTION: Exceeding the maximum withdrawal rate calculated on Attachment 3 could cause fuel damage.

* *

NOTE: When the affected rod is withdrawn, then Annunciator Panel "A" D-1, ROD CONTROL URGENT FAILURE, will annunciate, indicating that the affected bank lift coils are de-energized.

9. __ Manually withdraw the affected Control Rod by placing Rod Control lever in OUT:

   a) Verify the OUT direction lamp is LIT.

   b) Verify the affected Group Step Counter indicates outward motion.

10. __ Maintain Tave within 1.5°F of Tref by adjusting Turbine load or Steam Dumps as necessary.

NOTE: Steps 11 and 12 of this attachment are performed to ensure proper Group 1-Group 2 sequencing.

11. IF the dropped rod is in Group 1 of the affected bank, THEN do the following:

   __ a) Withdraw the Control Rod until it reaches a value of one step greater than the value recorded in Step 3 of this attachment.

   __ b) Drive the Control Rod in one step to the value recorded in Step 3 of this attachment.

12. __ IF the dropped rod is in Group 2 of the affected bank, THEN withdraw the Control Rod until the affected Group Step Counter reaches the value recorded in Step 3 of this attachment.

13. __ Record affected Group Step Counter Steps: _____ STEPS

14. __ Verify all rods in the affected bank are at the same height and that Rod Bottom light is NOT LIT. IF either condition is NOT satisfied, THEN notify the Reactor Engineer before continuing with this procedure.

20.
During 100% power operation the RO acknowledges annunciator B-G6, "PRZ Hi Level - BU Htrs On." RCS pressure is 2203 psig and decreasing slowly. VCT level trend is decreasing slowly.

Which ONE of the following diagnoses this off normal trend?

a) Pressurizer heaters have failed to minimum output.

b) Pressurizer level detector reference leg has separated from the pressurizer.

c) 1-CH-FCV-1122, CHG FLOW CONT, failed open.

d) 1-CH-HCV-1200A, LETDOWN ORIFICE ISOL, failed closed.

K/A: APE008.AA2.10 10CFR: 43.5/45.13

Level: Analysis, requires assembling the given information to solve the initiation of the event.

Origin: NEW Applicability: BOTH

References: 1-AR-B-G6, NCRODP-90J-LP-2 Objective 11996

Correct Answer: b)

Plausible distractors:

a) Heater failure would potentially swell the Pressurizer (would actually be countered by auto charging flow), and an increase in pressure.

c) Charging flow would explain an increase in PRZR level and decrease in VCT level, it would not cause a loss of pressure.

d) A letdown HCV failing closed would cause a short term level increase until charging flow control backed down charging flow to counter the increase. But would not explain the RCS pressure response.

E. The plant uses basically four different types of level elements:

DP Cells
Float Type
Displacer Type
Bubbler Type

Use H/T-2.7, Level Elements (Δ/P)

1. ΔP Cell elements used for measuring level uses the principal that the pressure exerted by the fluid, on the bottom of tank will be proportional to the fluid head.

   a. Factors to convert pressure to level:

      Density of the fluid
      Pressure on the top of the fluid

      The ΔP developed depends upon the mass between ΔP taps for static fluids.

      Discuss the inputs to the high and low side of the ΔP cell. The reason for different tap locations. The reason for reference leg.

      Flow ΔPs can cause erroneous level indications. S/G wide range level is inaccurate at high feed flow rates due to the flow ΔP. This is why narrow range level is used for protection and control.

PRZ HI LEVEL - BU HTRS ON

5% above program level

1.0 Probable Cause
- 1.1 Slow response of PZR level control system
- 1.2 Step change in Tavg or Tref
- 1.3 Loss of letdown flow
- 1.4 Failure of level channel 459 or 461

2.0 Operator Action
- 2.1 IF required, THEN take manual control of level control system
- 2.2 Control or minimize transients
- 2.3 Monitor RCS pressure due to all backup heaters being energized
- 2.4 IF required and available, THEN restore letdown
- 2.5 IF level channel has failed, THEN GO TO 1-AP-3, Loss of Vital Instrumentation

3.0 References
- 3.1 11715-FM-93B
- 3.2 W System Description
- 3.3 PLS Document
- 3.4 Unit 1 Loop Book, page RC-68

4.0 Actuation
- 4.1 Pressurizer level comparator 1-RC-LC-1459D

21.
The attached graph gives typical RCS pressure response following a small break LOCA. Which ONE of the following identifies the cause of stable RCS pressure from time 25 minutes to 75 minutes?

a) SI flow has matched break flow.

b) All charging pumps have reached their low-pressure auto-start setpoint.

c) RCP trip criteria was met and the change in slope is indicative of static RCS pressure.

d) RCS level has decreased out of the pressurizer and surge leg. This pressure is indicative of reactor vessel head pressure.

K/A: EPE009.EA1.10 10CFR: 41.7/45.5/45.6

Level: Analysis, Requires using knowledge to evaluate and predict the shape of the curves.

Origin: NEW Applicability: BOTH

References: NCRODP-106-LP-1 Objective 13962

Correct Answer: a)

Plausible distractors:

b) Charging pumps auto-start at 1120 psig; they would have already started on SI signal.

c) RCP start/stop evolutions routinely cause RCS pressure perturbations based on the condition of the unit. The operators have seen this and need to be able to correlate these perturbations to an accident condition and identify the responses are not commensurate.

d) Conventional pressurizer theory explains how pressure is maintained in the RCS. This answer requires the operator to analyze RCS pressure response with a dry pressurizer and realize pressure will continue to decrease even when level drops out of the pressurizer.

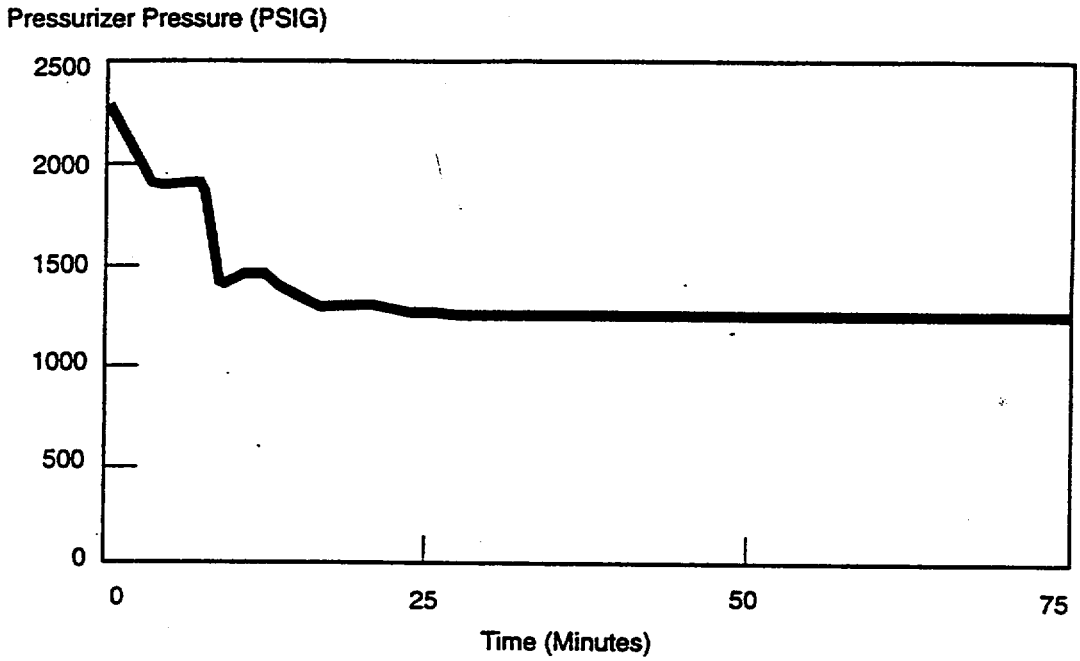

Graphics No: MT129A

G. Condition III events.

1. Small-break loss of reactor coolant accident.

a. For breaks greater than 3/8-inch diameter, normal charging cannot maintain PRZR level and pressure. The RCS will depressurize and an automatic reactor trip and SI will occur.

b. Potential causes.

(1) Small pipe rupture, crack in a large pipe, weld crack, etc.

c. Protection afforded.

(1) Reactor trip on low PRZR pressure, SI on low-low PRZR pressure, containment isolation, AFW auto-start.

Review the 10CFR50.46 acceptance criteria for the ECCS with trainees: 1) peak fuel clad temperature <2200°F; 2) fuel clad/water reaction doesn't exceed 1% of the total cladding in the reactor; 3) localized cladding oxidation <17%; 4) core remains amenable to cooling; 5) long-term core cooling provided.

---

(2) Tech Spec requirements for operability of RPS, ESF, ECCS, and other safety-related systems, and for RCS structural integrity.

(3) Abnormal and Emergency Operating Procedures provide guidance to the control room team to mitigate the consequences of the accident.

d. Sequence of events.

(1) Assumptions.

(a) Reactor power initially 102%, 7% of S/G tubes plugged.

(b) Break occurs in the cold leg between RCP discharge and vessel inlet; loss of offsite power occurs; single-train ESF failure; SI flow and accumulator injection occurs both in the intact loops AND the broken loop.

(2) Sequence (3/8" diameter to 1 ft^2 break).

(a) Three stages of the SBLOCA transient.

1) Gradual blowdown, decrease in water level is checked by inventory replenishment from SI.

2) Core recovery.

3) Long-term recirculation.

(b) Depressurization of the RCS causes coolant to flow from the PRZR to the RCS, resulting in PRZR level and pressure decreasing; reactor trip and SI will occur when the respective setpoints are reached.

---

*Ask the trainees how break flow and SI flow are affected by RCS pressure decrease, and why equilibrium is reached.

---

1) As RCS pressure decreases, break flow decreases and makeup flow increases; eventually pressure will stabilize when equilibrium between break flow and makeup flow is reached.

Ask the trainees what would happen if maximum SI flow is available and the break size is small.

---

2) If all ESF systems function (no single train failure), and the break size is small, RCS will repressurize, system void fraction will decrease and the PRZR refills.

(c) The 6" break results in more rapid depressurization and accumulator injection, which results in core recovery sooner than for the smaller break cases. Also, higher SI/accumulator flow rates limit core uncovery to the top two feet of the core, and the larger break size results in more energy removal from the core.

e. Affects and consequences.

(1) The 3" break is most limiting, with peak clad temperature reaching 1704°F. Maximum local cladding oxidation is 2%, and total clad-water reaction is less than 1%.

(a) RCS depressurization is sufficiently slow to allow

22.
During a large break LOCA, a safety injection signal initiates an automatic trip of the unit's main feed pumps. Which ONE of the following identifies the purpose of this trip?

a) Ensures the differential pressure across the S/G tubesheet does not exceed the design limit.

b) Prevents S/G overfill and excessive RCS cooldown following a main steam line break accident, but does not provide any substantial benefits following a LBLOCA.

c) Minimizes the thermal stresses on S/G tubes associated with rapid RCS depressurization by minimizing the feed water injection

d) Allows the RSSTs to maintain a constant voltage profile during the accident due to additional loads on the emergency busses.

K/A: EPE011.EK3.02 10CFR: 41.5/41.10/45.6/45.13

Level: Knowledge

Origin: NEW Applicability: BOTH

References:NCRODP-92-LP-2 Objective 12457

Correct Answer: b)

Plausible distractors:

a) Differential pressure from secondary to primary would be at a maximum during a LBLOCA, but is not the reason for FW isolation.

c) SG tube thermal stresses are a major concern during several accidents, however are not the basis for FW isolation.

d) This is a concern but is covered with the load shed system.

Power.

4. Check if SI actuated - Determine if SI is actuated or required by plant conditions. If SI is not required, go to ES-0.1, STEP 1, Reactor Trip Response. If setpoints listed in RNO column have not been exceeded but the SI actuation criteria on the CAP are met, then initiate SI and continue in E-0.

5. Manually initiate both trains of SI - manual initiation to follow-up automatic action.

6. Verify both emergency diesel generators are running - EDGs are ready to provide emergency power if required.

7. Verify SI pumps running - Verifies all SI pumps required to run are running. Two charging pumps and two low head SI pumps. Provides makeup inventory for core cooling.

I. Establishing a Stable Secondary Heat Sink

1. Verify main feedwater isolation - Verifying MFW isolation equipment actuated properly prevents SG overfill and excessive RCS cooldown. (especially during MSLB)

2. Standby MFPs in pull to lock - prevents an auto-start when SI is reset.

3. AFW pumps running - ensure AFW pumps start as required for makeup to secondary heat sink for decay heat removal.

J. Phase-A Isolation Verification - The non-essential containment penetrations are isolated to prevent potential release of radioactive material from containment.

23.
The following unit 2 conditions exist:

- The unit has sustained a small break LOCA.
- The team is in 2-E-1, LOSS OF REACTOR OR SECONDARY COOLANT.
- Pressurizer pressure is stable at 1405 psig.
- Pressurizer level is off-scale low.
- RCS subcooling is 29°F.
- Containment pressure is 13 psia.

Which ONE of the following identifies the procedure which will provide long term guidance to stabilize the plant given the above RCS conditions?

a) 2-ES-1.1, SI TERMINATION.

b) 2-ES-1.2, POST LOCA COOLDOWN AND DEPRESSURIZATION.

c) 2-ES-0.2A, NATURAL CIRCULATION COOLDOWN (WITH CRDM FANS).

d) 2-ES-0.3, NATURAL CIRCULATION COOLDOWN WITH STEAM VOID IN VESSEL (WITH RVLIS).

K/A: EPEE03.A1.3. 10CFR: 43.5/45.13

Level: Comprehension, a knowledge of SI termination criteria, and ability to recognize the appropriate recovery procedure is required.

Origin: NEW Applicability: BOTH

References: 1-E-1 Objective 13683

Correct Answer: b)

Plausible distractors:

a) Misconception concerning SI termination criteria.

c) & d) With varying degrees of severity c) is more plausible than d) since it states there is a steam void. These procedure cannot be entered from E-1. Both these procedures assume SI is not in service.

STEP	ACTION/EXPECTED RESPONSE	RESPONSE NOT OBTAINED
* 6.	__CHECK IF SI CAN BE TERMINATED:	
	a) RCS subcooling based on Core Exit TCs - GREATER THAN 25°F [75°F]	a) GO TO Step 7.
	b) Secondary heat sink: • Total AFW flow to intact SGs - GREATER THAN 340 GPM OR • Narrow range level in at least one intact SG - GREATER THAN 11% [22%]	b) GO TO Step 7.
	c) RCS pressure - STABLE OR INCREASING	c) GO TO Step 7.
	d) PRZR level - GREATER THAN 21% [40%]	d) Do the following: • Try to stabilize RCS pressure with normal PRZR spray. • GO TO Step 7.
	e) GO TO 1-ES-1.1, SI TERMINATION, STEP 1	
7.	__RESET BOTH TRAINS OF CDA USING THE SPRAY ACTUATION RESET SWITCHES	

STEP	ACTION/EXPECTED RESPONSE	RESPONSE NOT OBTAINED

NOTE:
- This procedure should be continued while hydrogen sample is obtained in Step 19.
- Adverse hydrogen concentration value applies only for high containment pressure, not for high containment radiation.
- There is a delay time of 5 minutes before the Containment Hydrogen Analyzer will provide an accurate reading.

19. __	CHECK CONTAINMENT HYDROGEN CONCENTRATION:	
	a) Verify Hydrogen Analyzer - IN SERVICE	a) Put Hydrogen Analyzer in service using 1-OP-63.2, CONTAINMENT HYDROGEN ANALYZER.
	b) Hydrogen concentration - LESS THAN 4% [1.6%]	b) Consult TSC or Plant Staff for additional recovery actions. GO TO Step 20.
	c) Hydrogen concentration - LESS THAN 0.3%	c) IF hydrogen concentration is less than 4% [1.6%], THEN put Hydrogen Recombiner in service using 1-OP-63.1, POST ACCIDENT THERMAL HYDROGEN RECOMBINER.
20 __	CHECK IF RCS COOLDOWN AND DEPRESSURIZATION IS REQUIRED:	
	a) RCS pressure - GREATER THAN 225 PSIG [450 PSIG]	a) IF total Low-Head SI Pump flow is greater than 650 gpm, THEN GO TO Step 21.
	b) GO TO 1-ES-1.2, POST-LOCA COOLDOWN AND DEPRESSURIZATION, STEP 1	

24.
A large-break LOCA has occurred on unit 2 and transfer of the SI system to cold leg recirc mode is in progress. Which ONE of the following identifies valves that are expected to be automatically cycling during the transfer?

a) 1-SI-MOV-1885 A/B/C/D (LHSI recirculation isolation valves).

b) 1-CH-MOV-1370 (RCP seal injection).

c) 1-CH-MOV-1115 B/D (HHSI suction from the RWST).

d) 1-SI-MOV-1890C/D (LHSI cold leg injection valves).

K/A: EPEE11.K1.3 10CFR: 41.8/41.10/45.3

Level: Knowledge

Origin: NEW Applicability: BOTH

References: 1-ES-1.3 Objective 3411

Correct Answer: a)

Plausible Distractors:

b) This valve requires manual manipulation during transfer to cold leg recirc mode.

c) These valves require manual manipulation during transfer to cold leg recirc mode.

d) These valves require manipulation during transfer from hot leg recirculation to cold leg recirc mode.

STEP	ACTION/EXPECTED RESPONSE	RESPONSE NOT OBTAINED
4.	__CHECK CHARGING PUMP STATUS - TWO CHARGING PUMPS RUNNING	Manually start pumps.
5.	__VERIFY LOW-HEAD SI PUMPS - RUNNING	Manually start pumps.

* *

CAUTION: To prevent pump damage, any pumps taking suction from the RWST must be stopped before reaching 3% RWST level.

* *

6.	__ALIGN SI SYSTEM FOR COLD LEG RECIRCULATION: a) Close 1-CH-MOV-1370 b) Verify Charging Pump Recirc Isolation Valves - CLOSED • 1-CH-MOV-1275A • 1-CH-MOV-1275B • 1-CH-MOV-1275C c) Verify Low-Head SI Pump Discharge Valves to Charging Pumps - OPEN: • 1-SI-MOV-1863A • 1-SI-MOV-1863B d) Verify Low-Head SI Pump Recirc Valves - CLOSED: • 1-SI-MOV-1885A • 1-SI-MOV-1885C • 1-SI-MOV-1885B • 1-SI-MOV-1885D	Manually align valves as necessary. IF at least one flow path from the Containment Sump to the RCS cannot be established OR maintained, THEN GO TO 1-ECA-1.1, LOSS OF EMERGENCY COOLANT RECIRCULATION, STEP 1.

(STEP 6 CONTINUED ON NEXT PAGE)

STEP	ACTION/EXPECTED RESPONSE	RESPONSE NOT OBTAINED
6.	ALIGN SI SYSTEM FOR COLD LEG RECIRCULATION (Continued): e) Verify Low-Head SI Pump Suction From Containment Sump - OPEN: • 1-SI-MOV-1860A • 1-SI-MOV-1860B f) Verify Low-Head SI Pump Suction From RWST - FULLY CLOSED: • 1-SI-MOV-1862A • 1-SI-MOV-1862B g) Close Charging Pump Suction From RWST Isolation Valves: • 1-CH-MOV-1115B • 1-CH-MOV-1115D h) Verify continued flow of Charging Pumps - INDICATED: • 1-SI-FI-1943 • 1-SI-FI-1943-1	
7.	__CHECK VCT LEVEL - GREATER THAN 12%	Do the following: a) Increase VCT level to greater than 12%. b) Close Charging Pump Suction From RWST Isolation Valves: • 1-CH-MOV-1115B • 1-CH-MOV-1115D <u>IF</u> VCT level cannot be increased to greater than 12%, <u>THEN</u> locally unlock and close 1-SI-46, RWST to Suction of Charging Pumps and Hydro Test Pump (located in the Auxiliary Building Basement near Unit 1 Penetration Area entrance).

24

STEP	ACTION/EXPECTED RESPONSE	RESPONSE NOT OBTAINED
1.	__ALIGN LOW-HEAD SI PUMPS FOR COLD LEG RECIRCULATION: a) Close the Low-Head SI Pump Hot Leg Injection Valves: • 1-SI-MOV-1890A • 1-SI-MOV-1890B b) Open the following valves: 1) Low-Head SI Pump Discharge Valves: • 1-SI-MOV-1864A • 1-SI-MOV-1864B 2) Low-Head SI Pump Cold Leg Injection Valves: • 1-SI-MOV-1890C • 1-SI-MOV-1890D	

25.
The operating team is responding to a unit 1 "A" main steam line break inside containment.
The following conditions presently exist:

- The operating team is currently performing 1-E-1, LOSS OF REACTOR OR SECONDARY COOLANT.
- "A" SG is dry with pressure <100 psig.
- "B" SG narrow range level is 20% and increasing.
- "C" SG narrow range level is 5% and increasing.
- Pressurizer level is 15% and increasing.
- Containment pressure is 18 psia and decreasing
- RCS subcooling is stable at 120°F.
- RCS pressure is 2150 psig and stable.

Which ONE of the following conditions will complete the transition criteria from 1-E-1 to 1-ES-1.1, SI TERMINATION?

a) "C" SG level increases to 14%.

b) "B" SG level increases to 25%.

c) RCS pressure increases to 2215 psig.

d) Pressurizer level increases to 22%.

K/A: EPEE02.A2.1 10CFR: 41.7/45.5/45.6

Level: Comprehension, an assessment of unit conditions is required to determine a knowledge of SI termination criteria.

Origin: NEW Applicability: BOTH

References: E-1 Objective 13683

Correct Answer: d)

Plausible Distractors:

a) Knowledge of minimum heat sink requirements is required (1/3 SG >11%, non-adverse containment); still less than the 22% required for adverse containment.
b) Determination of adverse containment is required to discount this answer, The containment pressure is above the SI setpoint, but below the threshold for adverse containment.
c) RCS pressure >2205 is a tech spec requirement, but is only involved in SI termination per the subcooling impact.

STEP	ACTION/EXPECTED RESPONSE	RESPONSE NOT OBTAINED
* 6.	__CHECK IF SI CAN BE TERMINATED:	
	a) RCS subcooling based on Core Exit TCs - GREATER THAN 25°F [75°F]	a) GO TO Step 7.
	b) Secondary heat sink: • Total AFW flow to intact SGs - GREATER THAN 340 GPM OR • Narrow range level in at least one intact SG - GREATER THAN 11% [22%]	b) GO TO Step 7.
	c) RCS pressure - STABLE OR INCREASING	c) GO TO Step 7.
	d) PRZR level - GREATER THAN 21% [40%]	d) Do the following: • Try to stabilize RCS pressure with normal PRZR spray. • GO TO Step 7.
	e) GO TO 1-ES-1.1, SI TERMINATION, STEP 1	
7.	__RESET BOTH TRAINS OF CDA USING THE SPRAY ACTUATION RESET SWITCHES	

26.
A Hi-Hi alarm was initiated by 1-GW-RM-101, process vent gaseous radiation monitor. Which ONE of the following **AUTOMATIC** action(s) must be verified?

a) 1-GW-TV-106, equipment vents, closed.

b) 1-GW-FCV-101, waste gas decay tanks discharge, closed.

c) 1-GW-TV-113, liquid waste tank vents, closed.

d) 1-GW-TV-114, boron recovery tank vents, closed.

K/A: SYS071.K1.06 10CFR: 41.2 - 41.9

Level: Knowledge

Origin: NEW Applicability: Both

References: 0-AP-5.1 Objective 10705

Correct Answer: b)

Plausible Distractors:

a),c),d) All are manual actions which are required to be taken in response to the alarm.

NOTE:
- The only way to determine if a particulate effluent release has exceeded Tech Spec limits is with grab sample analysis results.
- The analysis should be completed immediately due to time limits for event classification in EPIP-1.01, EMERGENCY MANAGER CONTROLLING PROCEDURE.

1. ___ Notify Health Physics to obtain and analyze a gaseous and particulate sample from the Process Vent.

2. IF a Hi-Hi alarm is actuated, THEN verify the following:

___ • 1-GW-TV-102A - CLOSED

___ • 1-GW-TV-102B - CLOSED

___ • 1-GW-FCV-101 - CLOSED

___ • 1-CV-P-3A, Unit 1 Containment Vacuum Pump A - STOPPED

___ • 1-CV-P-3B, Unit 1 Containment Vacuum Pump B - STOPPED

___ • 2-CV-P-3A, Unit 2 Containment Vacuum Pump A - STOPPED

___ • 2-CV-P-3B, Unit 2 Containment Vacuum Pump B - STOPPED

3. IF the abnormality of the Radiation Monitor was caused by an obvious malfunction, THEN do the following:

___ a) Inform the HP Shift Supervisor of the date and time the monitor was declared inoperable.

___ b) Submit a Work Request for the inoperable monitor.

___ c) RETURN TO 0-AP-5.1, COMMON UNIT RADIATION MONITORING SYSTEM, Step in effect.

4. Ensure the following trip valves are closed to stop potential radioactive sources to the Process Vent System:

___ • 1-GW-TV-106, Equipments Vents

___ • 1-GW-TV-113, Liquid Waste Tank Vents

___ • 1-GW-TV-114, Boron Recovery Tank Vents

27.
The following conditions exist while RHR is in service on unit 1:

- Hot leg temperature is 232°F.
- RCS pressure is 310 psig and decreasing rapidly.
- Containment sump level is increasing.
- Containment pressure is 9.8 psia and increasing slowly.
- Pressurizer level is 19% and decreasing.
- Charging flow is at maximum.

Which ONE of the following describes the reason that safety injection control switches are NOT manually actuated in response to these conditions?

a) Avoid unnecessary actuation of containment phase A isolation.

b) SSPS fuses are pulled with the plant in this condition.

c) Avoid unnecessary start of emergency diesel generators.

d) Prevent RCS overpressurization.

K/A: APE025.K2.03 10CFR: 41.7/45.7

Level: Comprehension, ability to evaluate the implications of a safety injection signal to RHR operation is required.

Origin:NEW Applicability: BOTH

References: NCRODP-88.6-LP-7 Objective: 12530

Correct Answer: d)

Plausible Distractors:

a) Phase A **would** actuate, AP-17 directs manual actuation of phase A isolation.

b) SSPS fuses **are** pulled during unit shutdown, but not until RCS temperature is less than 200°F.

c) EDGs **would** start, but are not required unless bus undervoltage exists.

27

Manually Initiate Safety Injection Flow

Immediately after entering the shutdown LOCA guideline, the operator will verify that charging flow is being injected at the maximum rate. If adequate pressurizer level and RCS subcooling can be restored quickly with normal charging only, the shutdown LOCA procedural guidance is not required and a transition to the appropriate plant procedure should be made. If adequate pressurizer level and RCS subcooling cannot be restored, a LOCA is in progress and other mitigating actions are required.

If, after verifying maximum charging flow and letdown isolation, indicated pressurizer level or RCS subcooling cannot be maintained, then flow from only one high pressure pump is established. Starting more than one pump at this time could result in excess injection and may lead to a repressurization of the RCS causing pressurized thermal shock concerns. If the break is larger and the flow from one pump is not sufficient, more pumps will be started later.

Next, actions are taken to make certain adequate ECCS capability will be available if required later. Any locked out ECCS equipment will be restored to operable status. The operator will also monitor the level in the Refueling Water Storage Tank so that the SI system can be realigned to the recirculation mode when required. If the flow from the one high pressure SI pump which was manually started has not been sufficient since RCS subcooling and pressurizer level have not been restored, a second high pressure SI pump is started to provide additional SI flow.

A check is made to verify the adequacy of the SI flow in maintaining core cooling. A reactor vessel level indication above the top of the core and core exit temperature stable or decreasing indicate adequate core cooling. If either of these indications does not exist, additional SI flow is required and the operator is directed to start additional SI pumps.

28.
Which ONE of the following indication(s) in conjunction with power range nuclear instruments provides assurance that a reactor trip has occurred?

a) Annunciator D-A4 "Turbine Tripped Reactor Trip" backlit red.

b) Reactor trip breakers and bypass breakers indicating lights illuminated green.

c) All individual rod position indicators at 0 steps with rod bottom lights NOT lit.

d) Annunciator E-D4 "AMSAC Initiated" illuminated white.

K/A: EPE029.A2.07 10CFR: 43.5/45.13

Level: Comprehension

Origin: NEW Applicability: BOTH

References: NCRODP-92-LP-2 Objective 12456

Correct Answer: b)

Plausible Distractors:

a) This first-out annunciator would be a precursor for a trip, but would not be used to **verify** a trip had occurred. However, first-out annunciators are used to verify that a safety injection occurred.

c) While these indicators are used as a redundant indicator and are listed in E-0, they are not one of the indicators used to verify reactor trip, since loss of semi-vital bus results in all IRPIs indicating zero and rod bottom lights NOT lit.

d) AMSAC was installed as an independent trip mechanism. It is not used to verify a normal trip.

(c) stop all RCPs

(d) ensure QS pumps running

(e) ensure QS pump discharge valves open

(f) initiate attachment for phase-B isolation verification

H. Westinghouse Owner's Group (WOG) background Basis

1. Verify reactor trip - Verified to ensure that the only heat being added to the RCS is decay heat and pump heat. The safeguards system designs assumes only decay heat and pump heat are present. If the reactor will not trip then go to FR-S.1, Response to Nuclear Power Generation/ATWS. This is a transition requiring FR's to be monitored. Power range nuclear instruments decreasing to less than 5% and all reactor trip/bypass breakers open are positive indications that a trip occurred. IRPIs could indicate zero due to loss of power (semi-vital bus).

2. Verify turbine trip - The turbine is tripped to prevent an uncontrolled cooldown of the RCS. Includes closing MSR reheat valves.

3. Verify both AC emergency busses are energized - Ensures adequate power sources to operate safeguards equipment. At least one train of safeguards equipment is required to deal with emergency conditions. If at least one train is not available, the operator should try to quickly restore one train by starting a diesel and load it on the emergency bus from the Control Room. If power cannot be restored by this action go to ECA-0.0, Loss of All AC Power.

4. Check if SI actuated - Determine if SI is actuated or required by plant conditions. If SI is not required, go to ES-0.1, STEP 1, Reactor Trip Response. If setpoints listed in RNO column have not been exceeded but the SI actuation criteria on the CAP are met, then initiate SI and continue in

29.
During 70% power operation intermediate range nuclear instrument N-36 fails low. Which ONE of the following actions is required in response to this event?

a) Enter an "Info Action" and submit a work request.

b) Reduce power to less than 10%.

c) Perform E-0, REACTOR TRIP OR SAFETY INJECTION, due to an automatic reactor trip.

d) Remove both the instrument and control power fuses.

K/A: APE033.A2.09 10CFR: 43.5/45.13

Level: Comprehension, evaluation of power level and impact of IRNI on integrated unit operation required.

Origin: NEW Applicability: BOTH

References: 1-AP-4.2 Objective 11980

Correct Answer: a)

Plausible Distractors:

b) If power during failure is less than 10%, power escalation is not permitted. The requirement to reduce to less than 10% does not exist.

c) If coincidences misinterpreted may think IR going <5E-11 amps will cause RX trip due to SR re-energization (actually high volts block due to P-10).

d) Power range detector instruments require instrument power fuses removed.

LEVEL 3
CONTROLLED WORKING COPY

2

NUMBER	PROCEDURE TITLE	REVISION
1-AP-4.2	MALFUNCTION OF NUCLEAR INSTRUMENTATION (INTERMEDIATE RANGE) (WITH TWO ATTACHMENTS)	5
		PAGE 1 of 9

PURPOSE

To provide the instructions to follow in the event of a malfunction in the intermediate range instrumentation channels.

ENTRY CONDITIONS

This procedure is entered as directed by the Nuclear Instrument Annunciator Response or when any of the following conditions exist:

- Erratic indication on intermediate range instruments N-35 and/or N-36, or
- Erroneous indication on intermediate range instruments N-35 and/or N-36, or
- Loss of indication on N-35 and/or N-36, or
- Invalid trip signals, or
- Invalid rod stop.

RECOMMENDED APPROVAL:	DATE	EFFECTIVE DATE
RECOMMENDED APPROVAL - ON FILE		
APPROVAL:	DATE	1-7-99
APPROVAL - ON FILE		

STEP	ACTION/EXPECTED RESPONSE	RESPONSE NOT OBTAINED
[1]__	STOP POWER INCREASE	
2.__	VERIFY REACTOR POWER - LESS THAN 10 PERCENT	No Intermediate Range detectors are required to be operable by Tech Spec 3.3.1.1. GO TO Step 10.
3.__	VERIFY BOTH INTERMEDIATE RANGE DETECTORS - FAILED	Refer to Technical Specification 3.3.1.1 for required actions. GO TO Step 17
4.__	REFER TO TECHNICAL SPECIFICATION 3.0.3 FOR REQUIRED ACTIONS	
5.__	CHECK REACTOR - CRITICAL	GO TO Step 8.

NOTE: P-6 is lost with both intermediate range instruments failed low. At 10% power, the source range instruments will automatically re-energize if the actions of Step 6 are not performed.

6.__ PERFORM A REACTOR SHUTDOWN AS FOLLOWS:

a) Place failed channels of Intermediate Range instrumentation in the following positions:

- N-35 Operation Selector Switch in 1 x 10^{-9} position
- N-36 Operation Selector Switch in 1 x 10^{-9} position

(STEP 6 CONTINUED ON NEXT PAGE)

STEP	ACTION/EXPECTED RESPONSE	RESPONSE NOT OBTAINED
6.	PERFORM A REACTOR SHUTDOWN AS FOLLOWS (Continued):	
	b) Place failed channels of Intermediate Range instrumentation in the following positions: • N-35 Level Trip Switch in BYPASS position • N-36 Level Trip Switch in BYPASS position	
	c) Ensure at least one Intermediate Range channel selected in Step 6a indicates between the following amp values: • 8.3×10^{-10} AND • 1.2×10^{-9}	c) Install jumpers in back side of BOTH Source Range channel cabinets: • N-31 Jumper between terminals 1 and 2 on terminal board 123 in 1-EI-CB-36A. • N-32 Jumper between terminals 1 and 2 on terminal board 223 in 1-EI-CB-36B.
	d) Verify both channels (N-31 and N-32) source range instrument power fuses - INSTALLED	d) Install instrument power fuses in source range: • Channel N-31 • Channel N-32
	e) Verify reactor power less than or equal to 5%	e) Reduce reactor power to 5%
	f) Manually trip Reactor	
	g) GO TO 1-E-0, REACTOR TRIP OR SAFETY INJECTION, while continuing with this procedure	
	h) Record time of Reactor trip: _____	

2

STEP	ACTION/EXPECTED RESPONSE	RESPONSE NOT OBTAINED

NOTE: When the installed jumpers on Source Range Channels are removed, then the Source Range High Voltage will automatically energize if both intermediate Range Channels are less than 5 X 10^{-11} amps.

7.__ ENERGIZE SOURCE RANGE HIGH VOLTAGE 15 MINUTES AFTER THE TIME RECORDED IN STEP 6 AS FOLLOWS:

- Return the Intermediate Range test switches in Step 6a to NORMAL

OR

- Remove the jumpers installed in Step 6c RNO

OR

- If BOTH IR NIs are failed high, remove the control power fuses

8.__ CONTINUE REACTOR SHUTDOWN AND COOLDOWN TO MODE SPECIFIED IN TECHNICAL SPECIFICATONS 3.0.3 AND 3.3.1.1

9.__ GO TO STEP 28

10.__ DETERMINE IF REACTOR SHUTDOWN IS REQUIRED OR IN PROGRESS — GO TO Step 15.

STEP	ACTION/EXPECTED RESPONSE	RESPONSE NOT OBTAINED

NOTE:
- P-6 is lost with both intermediate range instruments failed low. At 10% power, the source range instruments will automatically re-energize if the actions of Step 11 are not performed.
- IF the Intermediate Range High Flux reactor trip signal is NOT bypassed, THEN below 10% power when the IR Hi Flux Trip is reinstated, an undesired high flux trip will be initiated.
- The Instrument Dept may have already placed the switches on the failed channel(s) in the required positions.

11.__ PERFORM A REACTOR SHUTDOWN AS FOLLOWS:

a) Initiate power reduction to 5% power using 1-OP-2.2, UNIT POWER OPERATION MODE 1 TO MODE 2

b) At 15% power, ensure failed channel(s) of Intermediate Range instrumentation are placed in the following positions:

- N-35 Operation Selector Switch in 1 x 10^{-9} position
- N-36 Operation Selector Switch in 1 x 10^{-9} position

c) At 15% power, ensure failed channel(s) of Intermediate Range instrumentation are placed in the following positions:

- N-35 Level Trip Switch in BYPASS position
- N-36 Level Trip Switch in BYPASS position

(STEP 11 CONTINUED ON NEXT PAGE)

STEP	ACTION/EXPECTED RESPONSE	RESPONSE NOT OBTAINED
11.	PERFORM A REACTOR SHUTDOWN AS FOLLOWS (Continued):	
	d) Ensure at least one Intermediate Range channel selected in Step 11b indicates between the following amp values: • 8.3×10^{-10} AND • 1.2×10^{-9}	d) Install jumpers in back side of BOTH Source Range channel cabinets: • N-31 Jumper between terminals 1 and 2 on terminal board 123 in 1-EI-CB-36A. • N-32 Jumper between terminals 1 and 2 on terminal board 223 in 1-EI-CB-36B.
	e) Verify at least one of the following - LIT: • Annunciator Panel "L" F-1 • Annunciator Panel "L" F-2	
	f) Verify Annunciator Panel "A" B-1 - NOT LIT.	
	g) Verify Annunciator Panel "A" A-2 - LIT.	
	h) Verify both channels (N-31 and N-32) source range instrument power fuses - INSTALLED	h) Install instrument power fuses in source range: • Channel N-31 • Channel N-32
	i) Verify Reactor power - AT 5%	i) Reduce reactor power to 5%
	j) Verify BOTH Intermediate Range Channels - FAILED	j) GO TO Step 21
	k) Manually trip Reactor	
	l) GO TO 1-E-0, REACTOR TRIP OR SAFETY INJECTION, while continuing with this procedure	
	m) Record time of Reactor trip: _____	

STEP	ACTION/EXPECTED RESPONSE	RESPONSE NOT OBTAINED

NOTE: When the installed jumpers on Source Range Channels are removed, then the Source Range High Voltage will automatically energize if both intermediate Range Channels are less than 5 X 10^{-11} amps.

12.__ ENERGIZE SOURCE RANGE HIGH VOLTAGE 15 MINUTES AFTER THE TIME RECORDED IN STEP 11 AS FOLLOWS:

- Return the Intermediate Range test switches in Step 11b to NORMAL

OR

- Remove the jumpers installed in Step 11d RNO

OR

- If BOTH IR NIs are failed high, remove the control power fuses

13.__ CONTINUE COOLDOWN TO MODE SPECIFIED IN TECHNICAL SPECIFICATONS 3.0.3 AND 3.3.1.1

14.__ GO TO STEP 28

15.__ ENTER INFO ACTION STATEMENTS:

- Prior to reducing power to less than P-10, initiate 1-AP-4.2, Malfunction of Nuclear Instrumentation (Intermediate Range) at Step 11.
- Tech Spec 3.3.1.1 applies below P-10
- Tech Spec 3.0.3 applies below P-10 if BOTH IR NIs are inoperable

29

STEP	ACTION/EXPECTED RESPONSE	RESPONSE NOT OBTAINED
16.__	GO TO STEP 28	
17.__	ENTER ACTION STATEMENT OF TECH SPEC 3.3.1.1	
18.__	CHECK REACTOR POWER - BELOW P-6 (1×10^{-10} AMPS)	GO TO Step 20.
19.__	GO TO STEP 27	
20.__	CHECK REACTOR POWER - ABOVE P-6 (1×10^{-10} AMPS) BUT LESS THAN 5%	Maintain reactor power below P-10 until the IR NI is repaired. GO TO Step 28
21.__	MAINTAIN POWER LESS THAN 5%	
22.__	DETERMINE IF REACTOR SHUTDOWN - REQUIRED	GO TO Step 28.
23.__	INITIATE REACTOR SHUTDOWN USING 1-OP-3.1, UNIT SHUTDOWN FROM MODE 2 TO MODE 3	
24.__	VERIFY REACTOR POWER - AT 5×10^{-11} AMPS	
25.__	ENERGIZE SOURCE RANGE HIGH VOLTAGE MANUALLY BY PLACING BOTH TRAINS OF SOURCE RANGE BLOCK AND RESET TO "RESET"	
26.__	GO TO STEP 28	

STEP	ACTION/EXPECTED RESPONSE	RESPONSE NOT OBTAINED
27.__	MAINTAIN POWER LESS THAN P-6 (1×10^{-10} AMPS)	
	NOTE: IF a failed low Intermediate Range Channel is NOT blocked AND the other Intermediate Range Channel is failed OR fails low, with P-10 present(less than 10 percent Power OR following a Reactor Trip), THEN the Source Ranges will energize and possibly be damaged.	
28.__	VERIFY BOTH INTERMEDIATE RANGE DETECTORS - OPERABLE	Consult with the Instrument Department AND determine if the failed Intermediate Range channel(s) should be blocked to prevent Source Range energization. IF the failed Intermediate Range channel(s) are desired to be blocked, THEN perform Attachment 2, FAILED INTERMEDIATE RANGE CHANNEL BLOCK.
29.__	SUBMIT WORK REQUEST(S) AND DEVIATION REPORT(S)	
30.__	RETURN TO PROCEDURE AND STEP IN EFFECT	

- END -

- Precautions, Limitations, and Setpoints Document
- Westinghouse Opeating Instruction A-4, Nuclear Instrumentation Malfunction
- Westinghouse NIS Tech Manual
- Westinghouse SSP Tech Manual
- Tech Spec 3.0.3, Limiting Conditions for Operation and Surveillance Requirments
- Tech Spec 3.3.1.1, Reactor Trip System Instrumentation
- Tech Spec 3.9.2, Refueling Instrumentation
- 1-OP-2.2, UNIT POWER OPERATION MODE 1 TO MODE 2
- 1-OP-3.1, UNIT SHUTDOWN FROM MODE 2 TO MODE 3
- DCP 97-803, Intermediate Range NI High Flux Trip Setpoint Change
- Tech Spec Amendment 206 / 187 for Intermediate Range NI High Flux Trip

The following EOP is referenced in this procedure:

1-E-0, REACTOR TRIP OR SAFETY INJECTION

STEP	ACTION/EXPECTED RESPONSE	RESPONSE NOT OBTAINED
1.	ENSURE AT LEAST ONE FAILED CHANNEL IS PLACED INTO TRIP:	
	a) Place the desired failed channel(s) of Intermediate Range instrumentation in the following positions: • N-35 Operation Selector Switch in 1 x 10^{-9} position • N-36 Operation Selector Switch in 1 x 10^{-9} position	
	b) Place the same failed channel(s) of Intermediate Range instrumentation in the following positions: • N-35 Level Trip Switch in BYPASS position • N-36 Level Trip Switch in BYPASS position	
	c) Ensure at least one Intermediate Range channel selected in Step 1a indicates between the following amp values: • 8.3 x 10^{-10} AND • 1.2 x 10^{-9}	c) Install jumpers in back side of BOTH Source Range channel cabinets: • N-31 Jumper between terminals 1 and 2 on terminal board 123 in 1-EI-CB-36A. • N-32 Jumper between terminals 1 and 2 on terminal board 223 in 1-EI-CB-36B.
	d) Verify BOTH channels (N-31 and N-32) Source Range instrument power fuses - INSTALLED	d) Install instrument power fuses in Source Range: • Channel N-31 • Channel N-32

STEP	ACTION/EXPECTED RESPONSE	RESPONSE NOT OBTAINED
	NOTE: When the installed jumpers on Source Range Channels are removed, then the Source Range High Voltage will automatically energize if both intermediate Range Channels are less than 5 X 10^{-11} amps.	
* 2.	__CHECK IF REACTOR HAS TRIPPED	IF a Reactor Trip occurs, THEN energize Source Range high voltage 15 minutes after the Reactor Trip as follows: • Return the Intermediate Range test switches in Step 1a to NORMAL OR • Remove the jumpers installed in Step 1c RNO OR • If BOTH IR NIs are failed high, remove the control power fuses
3.	__RETURN TO STEP IN EFFECT WHILE CONTINUING WITH THIS ATTACHMENT	

29

STEP	ACTION/EXPECTED RESPONSE	RESPONSE NOT OBTAINED
4.	__CHECK INTERMEDIATE RANGE INSTRUMENTATION REPAIRED	Ensure the Instrument Department has completed the following: • Returned the Intermediate Range test switches in Step 1a to NORMAL OR • Removed the jumpers installed in Step 1c RNO OR • IF BOTH IR NIs were failed high, THEN control power fuses have been installed

- END -

30.
The following plant conditions exist on unit 1:

- 35% power, ramp to full power in progress.
- Annunciator K-G6, "N-16 RAD DET," actuates.
- "B" S/G N-16 monitor indicates 55 gpd and increasing.
- MS header N-16 monitor indicates 65 gpd and increasing.
- The N-16 monitor readings have been stable until 10 minutes ago.
- Air ejector R/M is unchanged since last logs.
- Charging flow rate has not changed.

Which ONE of the following is correct concerning the crew's response to these indications?

a) N-16 monitors cannot be used to confirm S/G leakage below 50% power; perform 1-AR-K-G6 and 1-AP-5 and monitor redundant indications.

b) Tube leakage in "B" S/G exceeds the reactor trip criteria in 1-AP-24, trip the reactor and perform 1-E-0, "Reactor Trip or Safety Injection."

c) Tube leakage in "B" S/G is "confirmed" by MS header N-16 and "B" S/G N-16 readings, perform 1-AR-K-G6, 1-AP-5 and 1-AP-24.

d) Tube leakage in "B" S/G exceeds the TS-3.4.6.3 limits, initiate a unit shutdown using 1-OP-2.2, "Unit Power Operation From Mode 1 to Mode 2."

K/A: APE037.K3.05 10CFR: 41.5,41.10/45.6/45.13

Level: Comprehension

Origin: NEW Applicability: BOTH

References: 1-AR-K-G6, 1-AP-5, 1-AP-24, TS-3.4.6.3 Objective 11404

Correct Answer: c)

Plausible Distractors:

a) N-16 monitors are not as accurate below 50% power, but can be used to trend and confirm S/G leakage.

b) A step increase (within 30 minutes) occurred, but was not of sufficient magnitude to require a reactor trip.

d) Unit shutdown is required, but because administrative limits have been exceeded.

REACTOR COOLANT SYSTEM

PRIMARY TO SECONDARY LEAKAGE

LIMITING CONDITION FOR OPERATION

3.4.6.3 Primary to secondary leakage shall be limited to:

a. Total leakage from all steam generators of 300 gpd,

b. Leakage from an individual steam generator of 100 gpd,

c. Total leakage increase of 60 gpd between surveillance intervals, and

d. An increasing trend based on the latest surveillance that indicates 100 gpd would not be exceeded on an individual steam generator within 90 minutes.

APPLICABILITY: MODE 1 above 50% power.*

ACTION:

a. If the total leakage limit from all steam generators or the leakage limit from any individual steam generator is exceeded, be in HOT STANDBY within the next 6 hours and cold shutdown within the following 30 hours.

b. If the increase in total leakage from all steam generators exceeds 60 gpd between surveillance intervals, reduce power below 50% rated thermal power within 90 minutes.

c. If an increasing trend indicates that the limit of 100 gpd per steam generator is going to be exceeded within 90 minutes, reduce power to below 50% rated thermal power within 90 minutes, be in HOT STANDBY within the next 6 hours and cold shutdown within the following 30 hours.

*Once the limiting condition for operation has been exceeded, the corresponding action must be followed to completion.

SURVEILLANCE REQUIREMENTS

4.4.6.3 Primary to secondary leakage shall be demonstrated to be within each of the above limits by:

a. Primary to secondary leakage will be recorded and trended at least once during each 4 hour interval (e.g., 00:00-04:00, 04:00-08:00, 08:00-12:00, 12:00-16:00, 16:00-20:00, 20:00-24:00) from each OPERABLE N-16 continuous readout and alarm radiation monitoring system and the condenser air ejector exhaust continuous readout and alarm radiation monitor.

STEP	ACTION/EXPECTED RESPONSE	RESPONSE NOT OBTAINED

NOTE: If Confirmed leakage exceeds 50 gpd in any SG or 150 gpd total, then power should be reduced to less than 50% within 90 minutes and below Mode 1 within 2 hours of when the excessive leakage was FIRST detected. The Unit should be placed in HOT STANDBY within the next 6 hours and COLD SHUTDOWN within the following 30 hours.

1.__ CHECK IF REACTOR TRIP IS REQUIRED AS INDICATED BY EITHER OF THE FOLLOWING:

- Step increase of Confirmed Leakage - GREATER THAN 100 GPD ON ANY SG WITHIN 30 MINUTES

OR

- Significant primary-to-secondary leakage as indicated by both of the following:

  a) Any valid Secondary System Radiation Monitor - INDICATING HIGH RADIATION

  b) Any of the following:

  - Steady-state charging flow - NOTICEABLY GREATER THAN NORMAL
  - Increased VCT makeup frequency
  - Unexpected SG level increase
  - Unexpected feedwater flow decrease

Do the following:

a) Notify Chemistry and Health Physics for samples.

b) IF power reduction is NOT required at this time, THEN determine RCS leak rate by performing one of the following:

- 1-PT-52.2, REACTOR COOLANT SYSTEM LEAK RATE (HAND CALCULATION)

OR

- 1-PT-52.2A, REACTOR COOLANT SYSTEM LEAK RATE (COMPUTER CALCULATION)

c) IF secondary coolant activity is greater than 10^{-5} uci/ml, THEN do the following:

1) Put the Unit 1 and Common Sump Pumps to OFF.

2) Put Special Order blue tags on Sump Pump control switches to sample and analyze before discharging.

d) Determine if Auxiliary Steam should be transferred to Unit 2 or Auxiliary Boilers.

e) RETURN TO procedure and step in effect.

NOTE: This section is provided as additional guidance in evaluating "confirmed leakage" indicators. Indicators are discussed from "Best indication" to "worst indication."

N-16 Monitors: N-16 Monitors on the individual Steam lines are the best indication, and track very well during transients. These monitors are not sensitive to RCS Activity or Air Ejector flowrates. However, they have a tendency to indicate slightly conservative at low powers (less than 50%).

SG Blowdown samples: These are not particularly accurate during power transients, and tend to indicate low for low leakrates (less than 10 gpd). They are sensitive to changes in RCS Activity and to changes in Blowdown flowrate, but not to Air Ejector flowrate.

Air Ejector grab samples: These are not accurate during power transients. They are sensitive to changes in RCS Activity and changes in Air Ejector flowrates.

N-16 Monitor on the Main Steam header: This monitor trends changes in leakrates well, but can be very conservative at low powers (less than 50%). It is sensitive to which SG is leaking (due to different lengths of MS piping from the respective SG to the monitor), and to mixing within the header. This monitor is not affected by changes in RCS Activity or Air Ejector flowrates.

Air Ejector Radiation Monitor: This monitor is an excellent trending tool, but is very sensitive to changes in RCS Activity and to Air Ejector flowrates. This is a poor monitor during power transients. The absolute values for leakrates are suspect below 80% power.

NRC Radiation Monitor on MS lines: These can be used for trending purposes, but are sensitive to changes in RCS Activity and power level. These monitors tend to only indicate large leakrates.

SG Blowdown Radiation Monitors: These are the poorest indication for leakrate. They are affected by RCS Activity and crud buildup within the Radiation Monitor.

N-16
RAD DET

INDIVIDUAL SG:
ALERT 10 gpd > baseline
HI 50 gpd > baseline
HI-HI 100 gpd (fixed)
HEADER:
ALERT 10 gpd > baseline
HI 50 gpd > baseline
HI-HI 100 gpd (fixed)

1.0 Probable Cause
- 1.1 Increasing primary to secondary leakage
- 1.2 Instrument malfunction

2.0 Operator Action

ACTION/EXPECTED RESPONSE	RESPONSE NOT OBTAINED
2.1 CHECK THE FOLLOWING RAD MONITORS AND IDENTIFY RAD MONITOR CAUSING ALARM: · 1-MS-RI-190, "A" MS Line · 1-MS-RI-191, "B" MS Line · 1-MS-RI-192, "C" MS Line · 1-MS-RI-193, MS HDR a. Alarm LED - LIT b. Operate LED - NOT LIT c. System Failure light - NOT LIT	Submit Work Request for failed annunciator.
2.2 GO TO 1-AP-5, UNIT 1 RADIATION MONITORING SYSTEM	

3.0 References
- 3.1 DCP 87-27-3
- 3.2 Tech Spec 3.4.6.3
- 3.3 Vendor Manual - Sentry Equipment Corporation
- 3.4 1-AP-5, Unit 1 Radiation Monitoring System

4.0 Actuation
- 4.1 Relays KA-2, KA-3, KA-4

30

1. __ Notify the STA to evaluate the Steam Generator leak rate trend data.

2. __ Notify the HP Shift Supervisor of the abnormal status of the monitor reading.

3. __ Notify the Superintendent of Operations or the Operations Manager On Call.

NOTE: The display should read STA OP within about 10 minutes, indicating that the N-16 Radiation Monitor has successfully completed a background count.

4. IF the abnormality of the Radiation Monitor is suspected to be a malfunction, THEN do the following:

__ a) Press the STAT button.

__ b) IF the display reads STA OP within 10 minutes, THEN GO TO Step 5 of this attachment. IF NOT, THEN do the following:

__ 1) Inform the HP Shift Supervisor of the date and time that the monitor was declared inoperable.

__ 2) Submit Work Request.

__ 3) IF the Unit is in Mode 1 at any power level, THEN perform applicable Actions of Tech Spec 3.4.6.4. IF none of the Primary-to-Secondary Leakage Detection Systems allowed for in the Action Statement are available, THEN do the following:

__ • Terminate any power increase.

__ • Reduce power to less than 50% within 90 minutes and below Mode 1 within 2 hours of determining no available Primary-to-Secondary Leakage Detection System. Bring the Unit to HOT STANDBY within the next 6 hours and to COLD SHUTDOWN within the following 30 hours.

__ 4) Enter the inoperable monitor in the Action Statement Status Log.

__ 5) RETURN TO procedure and step in effect.

30

5. __ Closely monitor radiation indication on the trend recorder and displays to determine if leakage is increasing.

NOTE: Because of inherent inaccuracies in the primary-to-secondary leakage indications at low power levels, the capabilities of the primary-to-secondary leakage detection instrumentation should be considered when determining the existence of leakage. Further guidance is given in Attachment 12, PRIMARY TO SECONDARY LEAKRATE INDICATION GUIDANCE.

6. Review the following and take required actions for confirmed leakage:

__ a) IF a step change in confirmed leakage of greater than 100 gpd in an individual SG occurs within 30 minutes, THEN GO TO 1-E-0, REACTOR TRIP OR SAFETY INJECTION.

b) IF confirmed leakage exceeds OR will apparently exceed one of the following limits:

- 50 gpd in an individual SG,

  OR

- 150 gpd total,

THEN do the following:

__ 1) Terminate any power increase.

__ 2) Reduce power to less than 50% within 90 minutes and below Mode 1 within 2 hours of detecting the excessive leakage. Bring the Unit to HOT STANDBY within the next 6 hours and to COLD SHUTDOWN within the following 30 hours.

7. __ IF confirmed Primary to Secondary leakage is suspected, THEN initiate 1-AP-24, STEAM GENERATOR TUBE LEAK.

8. __ RETURN TO procedure and step in effect.

31.
The following conditions exist on unit 1:

- 75% power.
- "B" MFW pump has just been placed in PULL-TO-LOCK for tagout (seal leak repairs) and an operator is in the 307' switchgear racking out the breakers.
- "C" MFW pump trips due to loss of lube oil pressure
- MFW suction pressure is 340 psig

Which ONE of the following is correct concerning the crew's response to this event?

a) Immediately start "B" MFW pump.

b) Start an additional condensate pump.

c) Trip the reactor and turbine and go to 1-E-0, "Reactor Trip or Safety Injection."

d) Reduce power to less than 55% at 5%/minute using 1-AP-2.2, "Fast Load Reduction."

K/A: APE054.K3.04 10CFR: 41.5, 41.10

Level: Comprehension

Origin: New Applicability: Both

References: 1-AP-31 Objective 14561

Correct Answer: c)

Plausible Distractors:

a. If the "B" FW pump were considered available, this would be correct. However, the "B" FW pump should NOT be removed from PULL-TO-LOCK if breakers are being racked.

b. If suction pressure were less than 300 psig, this would be correct.

d. Previously, operating crews were allowed to attempt to reduce power on a loss of MFW. 55% is the threshold requiring 2 MFW pumps running during power ascension per 1-OP-2.1.

STEP	ACTION/EXPECTED RESPONSE	RESPONSE NOT OBTAINED
[1]	__CHECK MFW PUMP STATUS:	
	a) Reactor Power - GREATER THAN 70%	a) IF at least one MFW Pump is running, THEN GO TO Step 2. IF NO MFW Pumps are running, THEN trip Reactor and Turbine and GO TO 1-E-0, REACTOR TRIP OR SAFETY INJECTION.
	b) Two MFW Pumps - RUNNING	b) IF a second MFW Pump cannot be immediately started, THEN trip Reactor and Turbine and GO TO 1-E-0, REACTOR TRIP OR SAFETY INJECTION.
[2]	__CHECK MFW SUCTION PRESSURE - AT LEAST 300 PSIG	Start an additional Condensate Pump.

32.
Unit 1 is at 300°F with a stable 30°F/hr heatup in progress for the last 4 hours. The following conditions also exist:

- Feedwater to all S/Gs is secured.
- For the last 30 minutes "A" S/G narrow range level has increased from 35% to 55%.
- Prior to this, "A" S/G narrow range level was stable at 35%.
- "B" and "C" S/Gs have been steady at 35% throughout the heatup.
- The only annunciators received during the last hour are related to the "A" S/G level increase.

Which ONE of the following events would produce the indicated parameters?

a) Small steam break on "A" S/G.

b) Tube leak on "A" S/G.

c) Feed line break on "B" and "C" S/Gs.

d) Variable leg leak on "A" S/G.

K/A: EPE038.A2.07 10CFR: 43.5/45.13

Level: Comprehension

Origin: NEW Applicability: BOTH

References: 1-AP-24.1 Objective 13964

Correct Answer: b)

Plausible Distractors:

a) While initiation of steaming causes a swell condition over a 30-minute period level would decrease and not increase.

c) The key is the event started 30 minutes ago, and levels had been stable prior to that point.

d) A variable leg leak causes level to be lower than actual, and there are three independent variable legs.

32

NUMBER	PROCEDURE TITLE	REVISION
1-AP-24.1	SHUTDOWN STEAM GENERATOR TUBE LEAK (WITH FOUR ATTACHMENTS)	16
		PAGE 1 of 12

PURPOSE

To provide instructions to follow in the event of a Steam Generator Tube Leak when Unit 1 is in Mode 4 or 5.

INFORMATION ONLY

ENTRY CONDITIONS

This procedure is entered when Unit 1 is in Mode 4 or 5 and an SG Tube Leak is indicated by any of the following conditions:

- 1-SV-RM-121, Condenser Air Ejector Radiation Monitor, indicates increasing activity or is in alarm, or
- SG Blowdown Radiation Monitors indicate increasing activity or are in alarm, or
- SG Blowdown samples indicate increasing activity, or
- Main Steamline Radiation Monitor indicates increasing activity, or
- Unexpected increase in SG level.

RECOMMENDED APPROVAL:	DATE	EFFECTIVE DATE
RECOMMENDED APPROVAL - ON FILE		03-27-98
APPROVAL:	DATE	
APPROVAL - ON FILE		

33.
The following conditions exist on unit 1:

- The crew is responding to a loss of heat sink
- "B" and "C" S/G wide range levels are 20%
- "A" S/G wide range level is 10%
- Containment pressure is 18 psia
- Containment radiation is normal

Which ONE of the following lists the proper order of priority of cooling restoration directed by 1-FR-H.1, RESPONSE TO LOSS OF SECONDARY HEAT SINK?

a) AFW, MFW, Condensate, bleed and feed, Fire Protection/Service Water.

b) MFW, AFW, Condensate, bleed and feed, Fire Protection/Service Water.

c) Bleed and feed, Fire Protection/Service Water, AFW, MFW, Condensate.

d) AFW, MFW, Condensate, Fire Protection/Service Water, bleed and feed.

K/A: EPEE05.A1.1 10CFR: 41.7

Level: Comprehension

Origin: NEW Applicability: Both

References:.1-FR-H.1 Objective 11304

Correct Answer: a)

Plausible Distractors:

b. Assumption made that U-1 AFW is degraded and not prioritized above MFW which may be immediately available.

c. If two S/G levels were less than 12% wide range or if containment radiation was greater than 20 psia, this would be the correct answer.

d. Previous revisions of FR-H.1 allowed aligning FP/SW prior to bleed and feed.

STEP	ACTION/EXPECTED RESPONSE	RESPONSE NOT OBTAINED

* *

CAUTION: If wide range SG level in any two SGs is less than 12% [25%] because of a loss of secondary heat sink, then Steps 21 through 30 should be performed immediately for RCS bleed and feed.

* *

NOTE: The 1-AP-22 series procedures may be useful during attempts to restore AFW flow.

2. TRY TO ESTABLISH AFW FLOW TO AT LEAST ONE SG:

a) Check SG Blowdown and Sample Isolation: • SG Blowdown Isolation Valves - CLOSED • SG Sample Isolation Valves - CLOSED	a) Manually close valves.
b) Review Control Room indications to determine cause of AFW failure: • ECST level • AFW Pump power supply • AFW valve alignment	
c) Try to restore AFW flow	c) IF Motor-Driven AFW Pumps cannot be started because of loss of control power, THEN try to start at least one pump as follows, while continuing with this procedure: • From the Auxiliary Shutdown Panel • Using 0-MOP-26.11, 4160-VOLT BREAKER LOCAL MANUAL OPERATION
d) Check total flow to SGs - GREATER THAN 340 GPM	d) Send an Operator to locally restore or realign AFW. GO TO Step 3.
e) RETURN TO procedure and step in effect	

STEP	ACTION/EXPECTED RESPONSE	RESPONSE NOT OBTAINED
3.	__STOP ALL RCPs	
4.	__TRY TO ESTABLISH MAIN FEED FLOW TO AT LEAST ONE SG:	
	a) Verify Condensate source - AVAILABLE: • Condensate Pump • Hotwell level indicated	a) GO TO Step 20.
	b) Verify at least one Condensate Pump - RUNNING	b) Start at least one Condensate Pump using 1-OP-30.1, OPERATION OF CONDENSATE SYSTEM. IF one pump cannot be started because of loss of control power, THEN initiate 0-MOP-26.11, 4160-VOLT BREAKER LOCAL MANUAL OPERATION. IF one pump cannot be started, THEN GO TO Step 20.
	c) Verify at least one Main Feed Pump - RUNNING	c) Do the following: 1) IF necessary, THEN reset both trains of SI. 2) Start one Main Feed Pump using 1-OP-31.1, MAIN FEEDWATER SYSTEM. IF one pump cannot be started because of loss of control power, THEN initiate 0-MOP-26.11, 4160-VOLT BREAKER LOCAL MANUAL OPERATION. IF one pump cannot be started, THEN GO TO Step 6.

(STEP 4 CONTINUED ON NEXT PAGE)

STEP	ACTION/EXPECTED RESPONSE	RESPONSE NOT OBTAINED
5.	__CHECK SG LEVELS:	
	a) Narrow range level in at least one SG - GREATER THAN 11% [22%]	a) Verify adequate feed flow, as indicated by Core Exit TCs decreasing and SG wide range levels increasing. IF adequate feed flow to at least one SG is verified, THEN maintain flow to restore narrow range level to greater than 11% [22%]. IF adequate feed flow is NOT verified, THEN GO TO Step 6.
	b) RETURN TO procedure and step in effect	
6.	__VERIFY AT LEAST ONE CONDENSATE PUMP - RUNNING	Start at least one Condensate Pump using 1-OP-30.1, OPERATION OF CONDENSATE SYSTEM. IF one pump cannot be started because of loss of control power, THEN initiate 0-MOP-26.11, 4160-VOLT BREAKER LOCAL MANUAL OPERATION. IF one pump cannot be started, THEN GO TO Step 20.

STEP	ACTION/EXPECTED RESPONSE	RESPONSE NOT OBTAINED
7.	ESTABLISH LINE-UP FOR FEED FLOW FROM CONDENSATE SYSTEM:	
	a) Verify at least one Main Feed Pump Discharge MOV is open: • 1-FW-MOV-150A, 1-FW-P-1A Disch • 1-FW-MOV-150B, 1-FW-P-1B Disch • 1-FW-MOV-150C, 1-FW-P-1C Disch	a) De-energize and locally open at least one Main Feed Pump Discharge MOV while continuing with this procedure (MCCs located in TB Mezz East): • 1-FW-MOV-150A - 1-EP-BKR-1B1-3-F2 • 1-FW-MOV-150B - 1-EP-BKR-1A1-2-A3 • 1-FW-MOV-150C - 1-EP-BKR-1B1-3-F3
	b) Fully open at least one Main Feed Reg Bypass Valve	b) IF valve will not open, THEN do the following: 1) Place both Wet Layup keyswitches in SG WET LAYUP. 2) Push both FW Bypass Valve Reset buttons. 3) Fully open at least one Main Feed Reg Bypass Valve. 4) IF valve(s) open, THEN GO TO Step 8. 5) IF valve(s) will NOT open, THEN GO TO Step 7d.
	c) GO TO Step 8	

(STEP 7 CONTINUED ON NEXT PAGE)

STEP	ACTION/EXPECTED RESPONSE	RESPONSE NOT OBTAINED
8.	__DEPRESSURIZE RCS TO ALLOW BLOCKING OF LOW PRZR PRESSURE SI:	
	a) Place all PRZR Heaters in PTL	
	b) Depressurize RCS to less than 1950 psig:	
	1) Verify a steam bubble exists in the PRZR: • RCS pressure - LESS THAN 2335 PSIG • RCS pressure - UNDER OPERATOR CONTROL • PRZR PORVs - CLOSED	1) Use one PRZR PORV. GO TO Step 9.
	2) Verify Normal Charging - IN SERVICE	2) Place Normal Charging in service. IF a Charging Pump cannot be started because of loss of control power, THEN try to start one pump as follows, while continuing with this procedure: • From the Auxiliary Shutdown Panel • Using 0-MOP-26.11, 4160-VOLT BREAKER LOCAL MANUAL OPERATION IF Normal Charging cannot be placed in service, THEN use one PRZR PORV AND GO TO Step 9.

(STEP 8 CONTINUED ON NEXT PAGE)

STEP	ACTION/EXPECTED RESPONSE	RESPONSE NOT OBTAINED
	NOTE: • To prevent an undesired Main Steamline Isolation, each Main Steamline flow should be kept less than 10^6 LBM/HR. • All intact SG pressures should be maintained within 100 psi of each other to prevent SG Differential Pressure SI and Feedwater isolation.	
14.	__INITIATE DEPRESSURIZATION OF ALL SGS TO BETWEEN 610 PSIG AND 120 PSIG BY DUMPING STEAM TO CONDENSER AT MAXIMUM RATE:	
	a) Verify Condenser Steam Dumps - AVAILABLE	a) Manually or locally depressurize SGs using: • SG PORVs OR • Decay Heat Release Valve using Attachment 6, USING DECAY HEAT RELEASE VALVE FOR COOLDOWN. IF depressurization is initiated, THEN GO TO Step 15. IF unable to depressurize SGs, THEN GO TO Step 20.
	b) Transfer Condenser Steam Dump to Steam Pressure Mode: 1) Put both Steam Dump Interlock switches to OFF/RESET 2) Put Steam Dump controller to MANUAL 3) Put Mode Selector switch to STEAM PRESS 4) Verify or reduce Steam Dump demand to zero 5) Put both Interlock switches to ON	
	c) Raise Steam Dump Controller demand to dump steam	

STEP	ACTION/EXPECTED RESPONSE	RESPONSE NOT OBTAINED
20.	__CHECK SG WIDE RANGE LEVEL IN ANY TWO SGs - LESS THAN 12% [25%]	RETURN TO Step 1.

* *

CAUTION: Steps 21 through 30 should be performed quickly in order to establish RCS heat removal by RCS bleed and feed.

* *

21. __STOP ALL RCPs

22. __PLACE ALL PRZR HEATERS IN PTL

23. __CHECK SI - ACTUATED

- Two Charging Pumps - RUNNING

AND

- Cold Leg SI flow - INDICATED:
  - 1-SI-FI-1943
  - 1-SI-FI-1943-1
  - 1-SI-FI-1961 (NQ)
  - 1-SI-FI-1962 (NQ)
  - 1-SI-FI-1963 (NQ)

Perform ONE of the following:

a) IF SI was previously actuated AND has been terminated, THEN do the following:

1) Manually initiate both trains of Phase A Isolation.

2) GO TO Step 24.

b) IF SI was NOT previously actuated, THEN manually actuate both trains of SI.

STEP	ACTION/EXPECTED RESPONSE	RESPONSE NOT OBTAINED
30.	VERIFY ADEQUATE RCS BLEED PATH BY VERIFYING THE FOLLOWING VALVES - OPEN: • 1-RC-MOV-1536, PRZR PORV BLOCK VALVE • 1-RC-MOV-1535, PRZR PORV BLOCK VALVE • 1-RC-PCV-1456, PRZR PORV • 1-RC-PCV-1455C, PRZR PORV	Do the following: a) Open the following Reactor Vent Valves: • 1-RC-SOV-101A-2 • 1-RC-SOV-101B-2 • 1-RC-SOV-101A-1 • 1-RC-SOV-101B-1 b) Open the following PRZR Vent Valves: • 1-RC-SOV-102A-2 • 1-RC-SOV-102B-2 • 1-RC-SOV-102A-1 • 1-RC-SOV-102B-1 c) Align one of the following low-pressure water sources to feed SGs using Attachment 3, ALIGNING ALTERNATE SOURCES TO AFW SUCTION HEADER: • Fire Protection System OR • Service Water System d) WHEN low-pressure water source flow path is aligned, THEN do the following: 1) Depressurize at least one SG to atmospheric pressure using SG PORV to inject low-pressure water source. 2) Initiate Attachment 2 to isolate SI Accumulators as SG pressure approaches 120 psig. Continue with Step 31.

34.
During a steam generator tube leak event, Health Physics determines that secondary coolant activity and unit 1 Turbine Building sump activity is $2X10^{-5}$ microcuries/ml . Which ONE of the following provides the required course of action per 1-AP-24, Steam Generator Tube Leak?

a) Leave the water in the Turbine Building sump to allow radioactive decay.

b) Turn the sump pumps off and hang blue tags on the control switches.

c) Use condensate to dilute the sump to acceptable release values.

d) Pump the Turbine Building sump to the demin sump.

K/A: APE059.K3.04 10CFR: 41.5, 41.10

Level: Knowledge

Origin: NEW Applicability: Both

References: 1-AP-24 Objective 7200

Correct Answer: b)

Plausible Distractors:

a. Many tanks in the station are allowed to provide holdup. In this case holdup is not an option since overflow and contamination of the turbine building floor will result.

c. This is not done since the contamination will settle here.

d. While this may be a logical large volume storage location, it is not referenced as a possible storage location.

STEP	ACTION/EXPECTED RESPONSE	RESPONSE NOT OBTAINED

NOTE: If Confirmed leakage exceeds 50 gpd in any SG or 150 gpd total, then power should be reduced to less than 50% within 90 minutes and below Mode 1 within 2 hours of when the excessive leakage was FIRST detected. The Unit should be placed in HOT STANDBY within the next 6 hours and COLD SHUTDOWN within the following 30 hours.

1.__ CHECK IF REACTOR TRIP IS REQUIRED AS INDICATED BY EITHER OF THE FOLLOWING:

- Step increase of Confirmed Leakage - GREATER THAN 100 GPD ON ANY SG WITHIN 30 MINUTES

OR

- Significant primary-to-secondary leakage as indicated by both of the following:

  a) Any valid Secondary System Radiation Monitor - INDICATING HIGH RADIATION

  b) Any of the following:

  - Steady-state charging flow - NOTICEABLY GREATER THAN NORMAL
  - Increased VCT makeup frequency
  - Unexpected SG level increase
  - Unexpected feedwater flow decrease

Do the following:

a) Notify Chemistry and Health Physics for samples.

b) IF power reduction is NOT required at this time, THEN determine RCS leak rate by performing one of the following:

- 1-PT-52.2, REACTOR COOLANT SYSTEM LEAK RATE (HAND CALCULATION)

OR

- 1-PT-52.2A, REACTOR COOLANT SYSTEM LEAK RATE (COMPUTER CALCULATION)

c) IF secondary coolant activity is greater than 10^{-5} uci/ml, THEN do the following:

1) Put the Unit 1 and Common Sump Pumps to OFF.

2) Put Special Order blue tags on Sump Pump control switches to sample and analyze before discharging.

d) Determine if Auxiliary Steam should be transferred to Unit 2 or Auxiliary Boilers.

e) RETURN TO procedure and step in effect.

35.
The following conditions exist on unit 1:

- Core onload is in progress
- Annunciator E-C6, "Spent Fuel Pit Lo Level," comes in
- Containment sump pumping frequency begins to increase
- Manipulator crane R/M high/hi-hi alarms come in

Which ONE of the following immediate operator actions is required?

a) Secure containment purge to isolate possible release paths.

b) Return any fuel assemblies in the cavity to the reactor vessel.

c) Place the fuel in a safe location and then evacuate the containment.

d) Mobilize the containment closure team to set refueling containment integrity.

K/A: APE061.G.1 (GEN 2.1.14) 10CFR: 43.5

Level: Comprehension

Origin: NEW Applicability: BOTH

References: 1-AP-52 Objective 12524

Correct Answer: b)

Plausible Distractors:

a) This is an automatic action that occurs to isolate containment, but it is not designated as an immediate action.

c) These actions would be correct for a fuel failure during handling and were previously designated as immediate actions.

d) This action is required for loss of RHR.

STEP	ACTION/EXPECTED RESPONSE	RESPONSE NOT OBTAINED
	NOTE: If electrical power is unavailable to the Manipulator Crane, then manual operation may be required.	
[1]	__RETURN ANY FUEL ASSEMBLIES IN THE CAVITY TO THE REACTOR VESSEL	Put assembly into upender and lower the frame.
[2]	__RETURN ANY FUEL ASSEMBLIES IN THE FUEL BUILDING TRANSFER CANAL TO THE SFP	
3.	__VERIFY LOWER INTERNALS IN ONE OF THE FOLLOWING CONDITIONS: • Installed in Reactor Vessel OR • Removed from Reactor Vessel AND adequately shielded	Return the lower internals to the Reactor Vessel.

* * * *

STEP	ACTION/EXPECTED RESPONSE	RESPONSE NOT OBTAINED

NOTE: If electrical power is unavailable to the Manipulator Crane, then manual operation may be required.

previously IOA's

1. __PLACE THE FAILED FUEL ASSEMBLY IN A SAFE LOCATION

2. __EVACUATE AFFECTED AREA

3. __CHECK ACCIDENT - IN FUEL BUILDING

Initiate ATTACHMENT 2 to close door in personnel airlock for affected Containment.

4. __NOTIFY CONTROL ROOM

5. __NOTIFY HEALTH PHYSICS DEPARTMENT

36.
The following conditions exist on unit 1:

- 100% power operation
- PRZR LEVEL CHANNEL DEFEAT switch is in the 461/460 position
- PRZR level channel II fails low.

Which ONE of the following identifies the unit response with no operator action?

a) Charging pump suction swaps to the RWST.

b) Charging flow decreases to minimum (appx. 25 gpm).

c) Pressurizer B/U heaters all turn on.

d) PZR HI LEVEL alarm eventually actuates.

K/A: APE028.A2.09 10CFR: 43.5

Level: Comprehension

Origin: NEW Applicability: Both

References: NCRODP-74-LP-2 Objective 10656

Correct Answer: b)

Plausible Distractors:

a. VCT level will initially decrease, however, the blender will maintain VCT level above the swapover setpoint.

c. Actual PRZR level will increase, so the other channel would normally turn on all B/U heaters at 5% above program. However, the failed channel sends a low level heater cutout to protect the heaters.

d. Although actual PRZR level would increase, the alarm can't be actuated because it is fed by the channel that is failed low.

4. Fail the pressurizer level channel feeding LC-460 high and discuss system response with the trainees.

. Annunciator B-G8, PRZ HI LEVEL (69.5%) alarms

5. Fail the pressurizer level channel feeding LC-460 low and discuss system response with the trainees.

. When LC-460 fails low letdown isolates (closes 1460B and HCV-1200A, B, and C at 15% pzr level)
. Annunciator B-G7, PZR LO LEV HTRS OFF - LETDWN ISOL alarms.
. Pressurizer level slowly increases due to letdown isolation.
. Charging flow is reduced to minimum due to increasing PZR level.
. Pressurizer level increases until a high level trip occurs.[10656]

37. (Reference provided)
The following events occurred on unit 2:

- Unit 2 was at 100% power when a SI/CDA occurred due to a large break LOCA.
- Four minutes following the CDA signal the "B" RSST locked out.
- The corresponding EDG auto started and loaded on the emergency bus as required.
- Assume it is now 18 seconds after the EDG loaded on the emergency bus.
- All the loads listed below currently are NOT running.

Which ONE of the following loads has **NOT sequenced properly** onto the emergency bus affected by the "B" RSST lockout?

a) "A" quench spray pump.

b) "B" inside recirc spray pump

c) "A" motor driven AFW pump.

d) "B" quench spray pump.

K/A: APE056.A2.47 10CFR: 43.2

Level: Comprehension Origin: NEW

Applicability: Both

References: TS Table 4.8-1 Objective 5531

Correct Answer: a)

Plausible Distractors:

b. Inside recirc spray pump starts 195 seconds after a CDA; pump would trip on UV and restart 20 seconds after the UV cleared.

c. AFW pump starts 20 seconds after a SI; pump would trip on UV and restart 25 seconds after the UV cleared.

d. Sequence time is 15 seconds after UV, however the "B" quench spray pump is powered from "J" bus.

TABLE 4.8-1

LIST OF LOAD SEQUENCING TIMERS AND DESIGN SETPOINTS
"H" BUS

TIMER IDENTIFICATION	SET POINT (SECONDS)	INITIATING SIGNAL[1]	TOLERANCE (SECONDS)
2FWEA01-62	20	SI	±1.00
2FWEA01-62A	25	LOP	±1.25
2SWEA03-62	10	LOP	±0.50
2RSOA01-62B	35	LOP	±1.75
2RSOA01-62A	210	CDA	±21.0
2CCPA01-62Y	15	LOP	±0.75
2CCPA01-62X	20	LOP	±1.00
2RSIA01-62A	20	LOP	±1.00
2RSIA01-62	195	CDA	±9.75
2QSSA01-62A	15	LOP	±0.75
2HVRA03-62	30	LOP	±1.50
2HVRA04-62	10	LOP	±0.50
2HVRB04-62	10	LOP	±0.50
2HVRC04-62	10	LOP	±0.50
2ENSH06-62A	15	LOP	±0.75
2SWSA35-62A2A	15	SI	±1.50
2SWSA35-62B2A	15	SI	±1.50

37

TABLE 4.8-1 (Continued)

LIST OF LOAD SEQUENCING TIMERS AND DESIGN SETPOINTS
"J" BUS

TIMER IDENTIFICATION	SET POINT (SECONDS)	INITIATING[1] SIGNAL	TOLERANCE (SECONDS)
2FWEB01-62	20	SI	±1.00
2FWEB01-62A	25	LOP	±1.25
2SWEB03-62	10	LOP	±0.50
2RSOB01-62B	35	LOP	±1.75
2RSOB01-62A	210	CDA	±21.0
2CCPB01-62Y	15	LOP	±0.75
2CCPB01-62X	20	LOP	±1.00
2RSIB01-62A	20	LOP	±1.00
2RSIB01-62	195	CDA	±9.75
2QSSB01-62A	15	LOP	±0.75
2HVRB03-62	30	LOP	±1.50
2HVRD04-62	10	LOP	±0.50
2HVRE04-62	10	LOP	±0.50
2HVRF04-62	10	LOP	±0.50
2ENSJ06-62A	15	LOP	±0.75
2SWSB35-62A2B	15	SI	±1.50
2SWSB35-62B2B	15	SI	±1.50

(1) SI - Safety Injection
LOP - Loss of Offsite Power
CDA - Containment Depressurization Actuation

38.
Assuming that the unit 1 service air compressor (1-SA-C-1) is tagged out, which ONE of the following identifies the automatic system response to a trip of the unit 2 service air compressor (2-SA-C-1)?

a) 2-IA-TV-211, Turbine Building IA dryer bypass valve, opens to supply air to both units instrument air systems.

b) The standby instrument air compressor will start and all instrument air loads will be supplied by the two instrument air compressors.

c) The standby instrument air compressor will start but instrument air pressure will continue to decrease without service air backup, requiring a reactor trip.

d) The standby instrument air compressor will start and load continuously; the running compressor will load and unload to supply all instrument air loads.

K/A: APE065.A2.01 10CFR: 43.5

Level: Comprehension

Origin: NEW Applicability: BOTH

References: NCRODP-17-LP-1 Objective 11973

Correct Answer: b)

Plausible Distractors:

a) The bypass valve opens but will NOT supply instrument air without a service air compressor running.

c) This was true prior to extensive instrument air system upgrades.

d) The standby compressor does start, but will load intermittently; IA pressure stabilizes at a lower value than prior to the event.

2. The purpose of the Service Air System is to:

   a. Provide pressurized air for the operation of pneumatically operated tools and other auxiliary equipment throughout the plant.

   b. Provide backup supply of air to instrument air.

3. The purpose of the Containment Instrument Air System is to supply the compressed air requirements of the components inside of containment with clean, dry air.

U. The normal design pressure for the instrument air system is approximately 110 psig as per the UFSAR. The Instrument Air System is normally backed up by the Service Air System (which is normally supplying a portion of the Instrument air loads). [4267]

V. Flow path for the IA compressors to their respective loads: [4269]

1. Two instrument air compressors (located on the second floor of the auxiliary building) flow, to it's instrument air receiver then through air drying towers 1 or 2-IA-D-1 to instrument air headers (normally only one of two instrument air compressors will run at one time)

2. Flow path for service air compressors to the Instrument Air Subsystem

   From the service air receiver 2-IA-TK-2 located in the unit 2 turbine building basement, service air flows two instrument air dryer 2-IA-D-7, 2-IA-D-7 then flows through a check valve to the turbine building instrument air system (where unit three was supposed to tie in) located by the south west stairs in the basement of unit 2.

3. Flow path for service air receivers to the Instrument Air Subsystem

   Service air receivers(in aux bld) through a PCV (Failed open with no air line attached) to the instrument air receivers.

4. Flow path for service air compressors to the turbine building service air supply lines

   Service air compressors to service air receiver 2-SA-TK-2 then to SA receivers in the auxiliary building then to service air loads.

5. Flow path from the containment IA compressors to the containment IA loads.

   From the containment instrument air compressors to their associated air receiver, then after cooler, then pre-filter then air dryer and then post filter then to the containment IA loads.

W. Instrument air compressor: [4270]

1. Instrument Air Compressors 1/2-IC-C-1 [Atlas-Copco]

   a. General

      (1) [Screw type, positive displacement, two stage, oil free]

      (2) [135 psig, 440 SCFM]

      (3) [Screws are synchronized by timing gears and do not touch]

X. Instrument Air Compressor Control [4271]

1. Each position of the instrument air compressor control switch in the control room operates as follows:

   a. Control switch to hand

      (1) Compressor will start
      (2) Loads at 103 psig decreasing
      (3) Unloads at 109 psig increasing
      (4) Compressor will not shut off it will stay running unloaded indefinatly

   b. Control switch to auto

      (1) Compressor will start
      (2) Loads at 98 psig
      (3) Unloads at 106 psig
      (4) If compressor runs unloaded for 20 minutes in auto it will trip
      (5) Compressor auto starts at 98 psig decreasing

   c. Control switch to off

      a. Compressor stops after an unloading delay of 4 sec

2. The compressor LOSS OF POWER RESET switch position affects compressor operability for a momentary loss of power as follows:

   a. (Assuming switch in hand or auto in control room) If reset switch is in on after a loss of power compressor will auto start. If switch is in off

5. The Turbine Building dryer 2-IA-D-7's bypass valve 2-IA-TV-211 trips open at 90 psig

6. Pressure is physically sensed for control of Turbine Building dryer 2-IA-D-7's bypass valve 2-IA-TV-211 on the 2-IA-D-7 supply to turbine building instrument air header, downstream of common discharge check valve.

7. The power supply for the instrument air dryers (1/2-IA-D-1 and 2-IA-D-7) is from station service.

8. To determine instrument air dryer 2-IA-D-7's bypass valve 2-IA-TV-211 position control box is mounted on support beam by 2-IA-D-7. This has an open indicating light and bypass reset switch.The position indicating light is energized when signal sent to open 2-IA-TV-211 (therefore indicating light is demand position and not actual position)

EE. The seismically qualified air receivers are installed to ensure that all safety related, air operated valves that may be operated during accident conditions will have air available from air storage bottles. The following are seismically qualified air receivers: [4268]

1. 5 in MSVH (3 for porvs and two for terry turbine)
2. 5 in AFPH (3 for HCVS and two for PCVS 159a,b)
3. 3 on the fourth floor aux bld (blow off dampers 1 on A stack and 2 for B stack
4. 2 sets for each units safeguards exhaust dampers

FF. Service Air Compressors [4229]

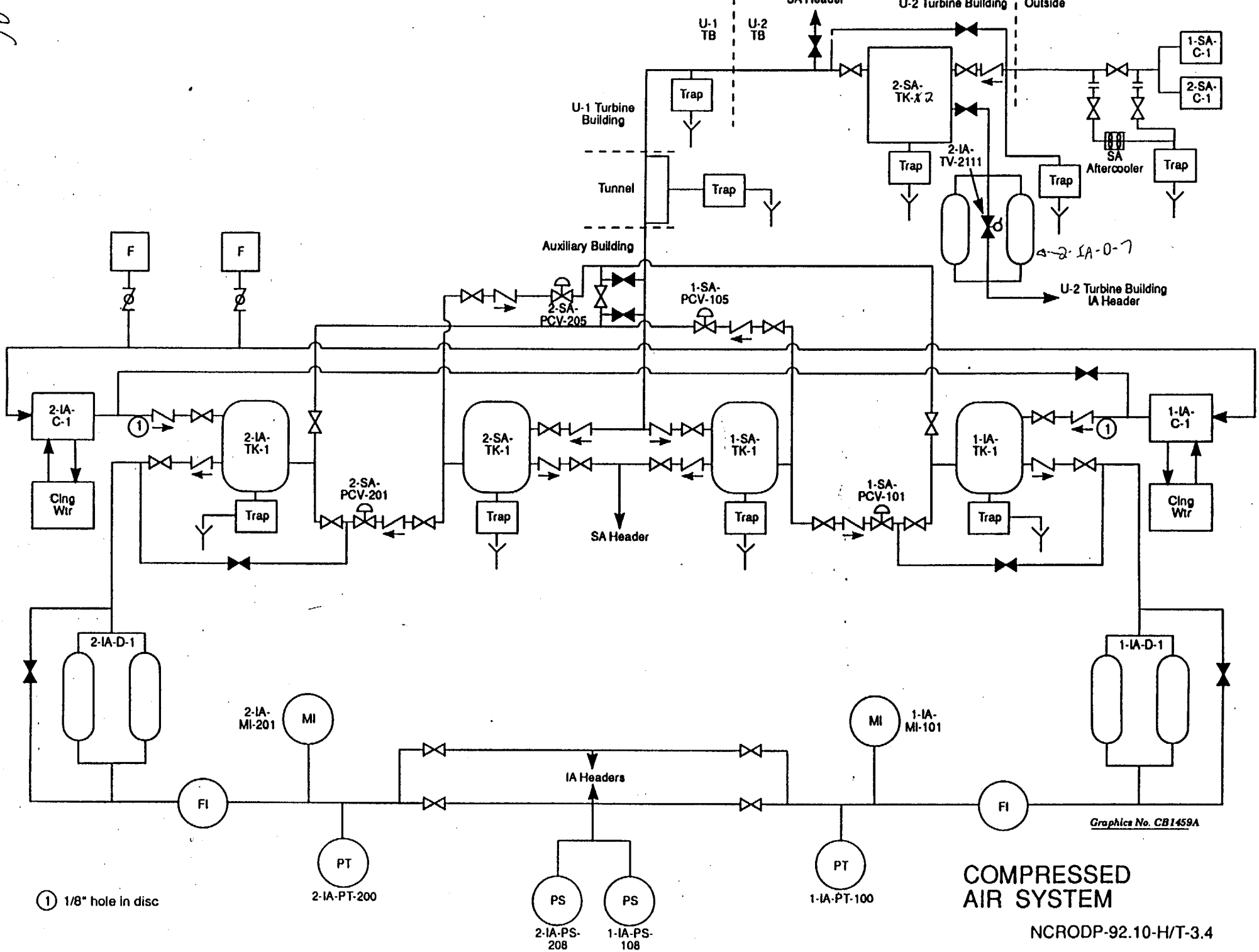
SA Header
U-2 Turbine Building
Outside
U-1 TB
U-2 TB
U-1 Turbine Building
Tunnel
Auxiliary Building
Trap
2-SA-TK-2
1-SA-C-1
2-SA-C-1
2-IA-TV-2111
SA Aftercooler
2-IA-D-7
U-2 Turbine Building IA Header
F
2-SA-PCV-205
1-SA-PCV-105
2-IA-C-1
2-IA-TK-1
2-SA-TK-1
1-SA-TK-1
1-IA-TK-1
1-IA-C-1
Clng Wtr
2-SA-PCV-201
1-SA-PCV-101
SA Header
2-IA-D-1
1-IA-D-1
2-IA-MI-201
MI
1-IA-MI-101
IA Headers
FI
PT
2-IA-PT-200
PS
2-IA-PS-208
1-IA-PS-108
1-IA-PT-100
Graphics No. CB1459A
1 1/8" hole in disc
COMPRESSED AIR SYSTEM
NCRODP-92.10-H/T-3.4

39.
Unit 1 is operating at 100% power with all systems in AUTOMATIC except rod control. The rods were placed in MANUAL due to hunting. The RO suddenly hears the sound of rods stepping, and observes that inward rod motion exists.

Which ONE of the following identifies the required response to this transient?

a) Verify a proper temperature mismatch exists for the given rod speed.

b) Place rods in automatic and verify rod motion stopped.

c) Trip unit 1 reactor and perform 1-E-0, "Reactor Trip or Safety Injection."

d) Ramp the turbine back to match reactor power.

K/A: SYS001.G.14 (GEN2.4.49) 10CFR: 41.10/43.2/45.6

Level: Knowledge

Origin: NEW Applicability: BOTH

References: AP-1.1 Objective 11022

Correct Answer: c)

Plausible distractors:

a) If rod motion existed with rods in auto this would be a correct action.

b) While it may make sense to determine if a different switch position may correct the problem, it is in direct violation of an immediate action step.

d) An integrated plant response to attempt to stabilize temperature, but not directed by the controlling procedure.

STEP	ACTION/EXPECTED RESPONSE	RESPONSE NOT OBTAINED
[1]	__PUT CONTROL ROD BANK SELECTOR SWITCH TO MANUAL	
[2]	__VERIFY ROD MOTION - STOPPED	GO TO 1-E-0, REACTOR TRIP OR SAFETY INJECTION.
3.	__VERIFY SHUTDOWN MARGIN:	
	a) Control Rods - ABOVE LO-LO INSERTION LIMIT	a) Immediately initiate and continue boration at ≥10 gpm of 12,950 ppm boric acid solution or equivalent until the required shutdown margin is restored, in accordance with Tech Spec 3.1.1.1. <u>WHEN</u> the Unit is in Mode 1 or Mode 2 with Keff greater than or equal to 1.0, <u>THEN</u> shutdown margin is restored when the control rods are above the LO-LO insertion limit.
	b) Control Rods - ABOVE INSERTION LIMIT OF STATION CURVE 1-SC-1.7 OR CORE OPERATING LIMITS REPORT (LO-LO Insertion Limit)	b) Restore Control Rods to above the Insertion Limits of Technical Specification 3.1.3.6 within two hours by: • Manually withdrawing Control Rods <u>OR</u> • Manually reducing Turbine load using 1-OP-2.2, Unit Power Operation from Mode 1 to Mode 2.

40.
The following conditions exist on Unit 2:

- A large steam line break has occurred inside containment.
- The team is performing 2-E-0, REACTOR TRIP OR SAFETY INJECTION.
- "B" SG pressure is 100 psig and decreasing slowly.
- RCS pressure is 1725 psig and slowly recovering.
- RCS temperature is 501°F and decreasing slowly.
- Containment pressure peaked at 32 psia and is now 22 psia.
- Total safety injection flow is 420 gpm.

Which ONE of the following identifies the desired status of the reactor coolant pumps?

a) Leave running to ensure even mixing of the injected RWST water.

b) Secure due to the status of RCS subcooling.

c) Secure due to the status of RCP motor cooling.

d) Leave running because RCS conditions are not conducive for natural circulation flow.

K/A: SYS003.K6.04 10CFR: 41.7/45.5

Level: Comprehension.

Origin: NEW Applicability: BOTH

References: E-0 CAP item #6 Objective 12451

Correct Answer: c)

Plausible distractors:

a) There are a number of industry events concerning boron mixing and PTS concerns, in this case, a higher priority concern is present.

b) Subcooling is greater than the required 65°F adverse containment setpoint.

d) The conditions are not conducive, butthe loss of motor cooling is a higher priority concern.

CONTINUOUS ACTION PAGE FOR 1-E-0

1. ADVERSE CONTAINMENT CRITERIA
   IF either of the following conditions exist, THEN use setpoints in brackets:
   - 20 psia Containment pressure, OR
   - Containment radiation has reached or exceeded 10^5 R/hr (70% on High Range Recorder).

2. RCP TRIP CRITERIA
   IF both conditions listed below exist, THEN trip all RCPs:
   - Charging Pumps - AT LEAST ONE RUNNING AND FLOWING TO RCS, AND
   - RCS subcooling based on Core Exit TCs - LESS THAN 20°F [65°F].

3. CHARGING PUMP RECIRC PATH CRITERIA
   - IF RCS pressure decreases to less than 1275 psig [1475 psig] AND RCPs tripped, THEN close Charging Pump Recirc Valves.
   - IF RCS pressure increases to 2000 psig, THEN open Charging Pump Recirc Valves.

4. SI ACTUATION CRITERIA
   IF either condition listed below occurs, THEN manually initiate both trains of SI AND GO TO 1-E-0, REACTOR TRIP OR SAFETY INJECTION, STEP 1:
   - RCS subcooling based on Core Exit TCs - LESS THAN 25°F [75°F], OR
   - PRZR level - CANNOT BE MAINTAINED GREATER THAN 11% [40%].

5. ECST LEVEL CRITERIA
   WHEN the ECST level decreases to 40%, THEN initiate 1-AP-22.5, LOSS OF EMERGENCY CONDENSATE STORAGE TANK 1-CN-TK-1.

6. CDA ACTUATION CRITERIA
   IF Containment pressure exceeds 28 psia on 1-LM-PR-110B, THEN do the following:

   a) Manually actuate both trains of CDA.

   b) Ensure CC Pumps STOPPED.

   c) Stop all RCPs.

   d) Ensure QS Pumps RUNNING.

   e) Ensure QS Pump Discharge MOVs OPEN.

   f) Initiate Attachment 2.

F. ECST Level Criteria

1. If emergency condensate storage tank level drops below 40% then initiate 1-AP-22.5, "Loss of ECST."

2. Reminds operator of limited supply of water and alternate supply will be required.

G. CDA Actuation Criteria

1. CDA is actuated if containment pressure exceeds 28 psia.

2. Required actions:
   (a) manually actuate both trains of CDA (2 of 2 switches-simultaneously)
   (b) ensure CC pumps stopped
   (c) stop all RCPs (required due to loss of motor cooling)
   (d) ensure QS pumps running
   (e) ensure QS pump discharge valves open
   (f) initiate attachment for phase-B isolation verification

H. Westinghouse Owner's Group (WOG) background Basis

1. Verify reactor trip - Verified to ensure that the only heat being added to the RCS is decay heat and pump heat. The safeguards system designs assumes only decay heat and pump heat are present. If the reactor will not trip then go to FR-S.1, Response to Nuclear Power Generation/ATWS. This is a transition requiring FR's to be monitored. If only one RTB opened and some rods were stuck out, but all other parameters indicate a trip did occur, then the intent is satisfied and transitioning to FR-S.1 is

41. (Reference provided)
Assume a typical reactor startup is in progress. 1/M plot data is as follows:

- At 98 steps on "C" bank, source range counts were 800 cps (N-31 reading highest).
- At 143 steps on "C" bank, N-31 indicated 1300 cps.
- At 188 steps on "C" bank, N-31 indicated 2500 cps.

Using the attached 1/M plot, which ONE of the following gives the current projected "D" bank critical rod height?

a) 102 steps.

b) 108 steps.

c) 156 steps.

d) >228 steps.

K/A: SYS004.A4.03

10CFR: 41.7/45.5 to 45.8

Level: Analysis.

Origin: NEW

Applicability: BOTH

References: 1-OP-1.5, attach. 4

Objective 10383

Correct Answer: b)

Plausible distractors: See attached.

ATTACHMENT 4

(Page 1 of 1)

1/M PLOT

Criticality is projected to occur at the point that an extrapolated line drawn between the last two 1/M points crosses the 0.0 axis.

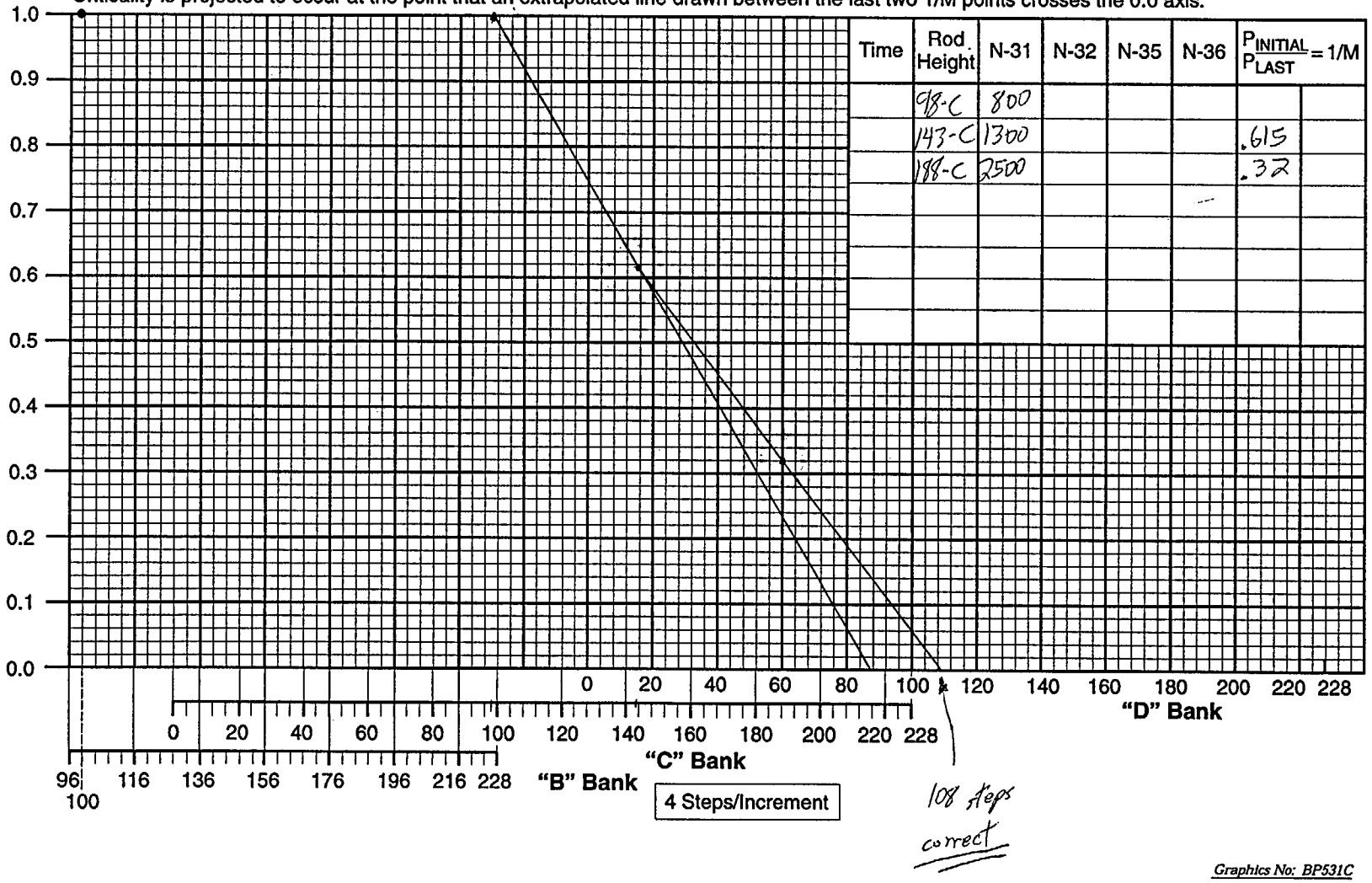

Time	Rod Height	N-31	N-32	N-35	N-36	$\frac{P_{INITIAL}}{P_{LAST}} = 1/M$	
	98-C	800					
	143-C	1300				.615	
	188-C	2500				.32	

Graphics No: BP531C

41

distractor

ATTACHMENT 4

(Page 1 of 1)

1/M PLOT

Criticality is projected to occur at the point that an extrapolated line drawn between the last two 1/M points crosses the 0.0 axis.

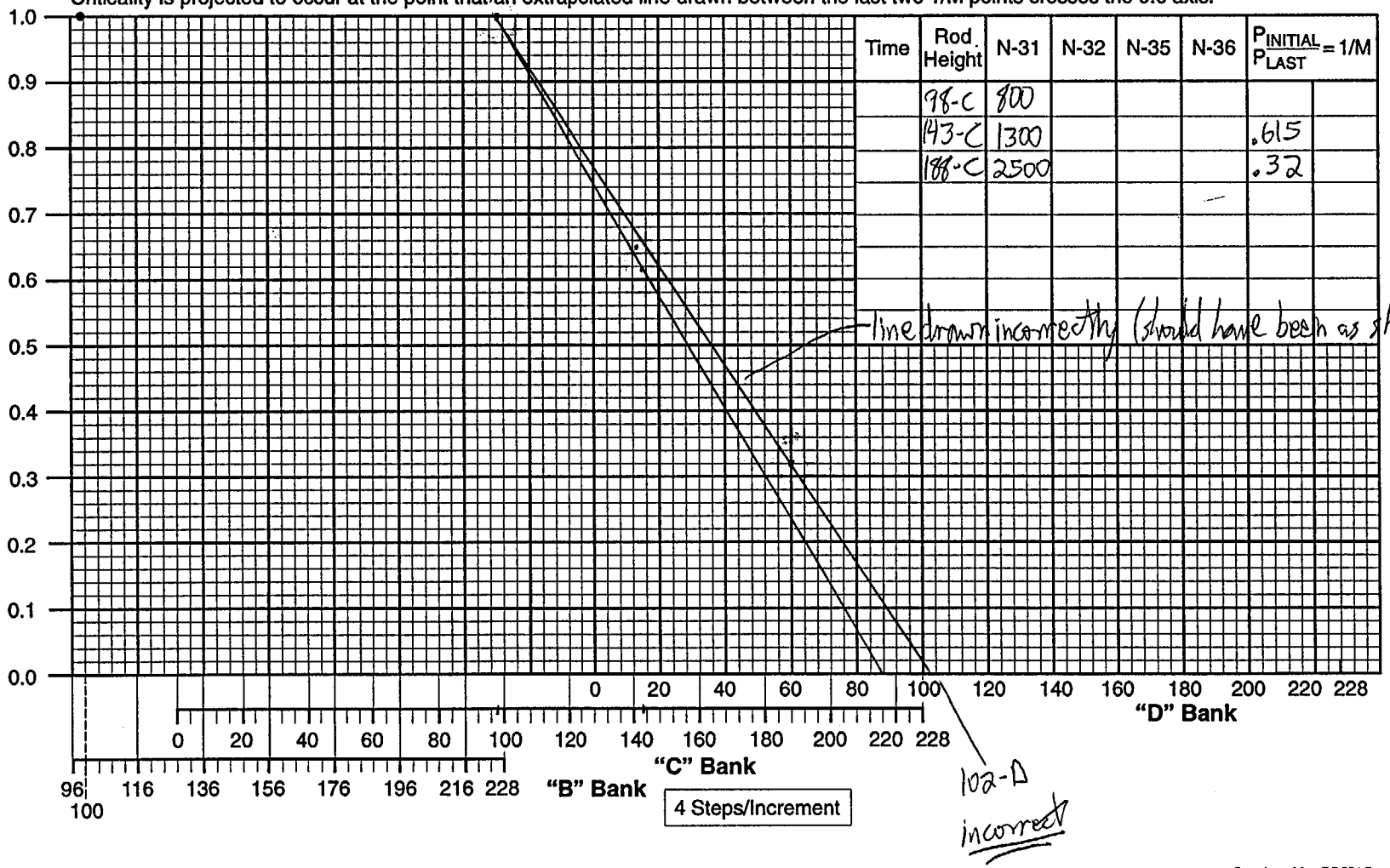

Time	Rod Height	N-31	N-32	N-35	N-36	$\frac{P_{INITIAL}}{P_{LAST}} = 1/M$	
	98-C	800					
	143-C	1300				.615	
	188-C	2500				.32	

line drawn incorrectly (should have been as shown on key)

Graphics No: BP531C

4

41

distractor

ATTACHMENT 4
(Page 1 of 1)
1/M PLOT

Criticality is projected to occur at the point that an extrapolated line drawn between the last two 1/M points crosses the 0.0 axis.

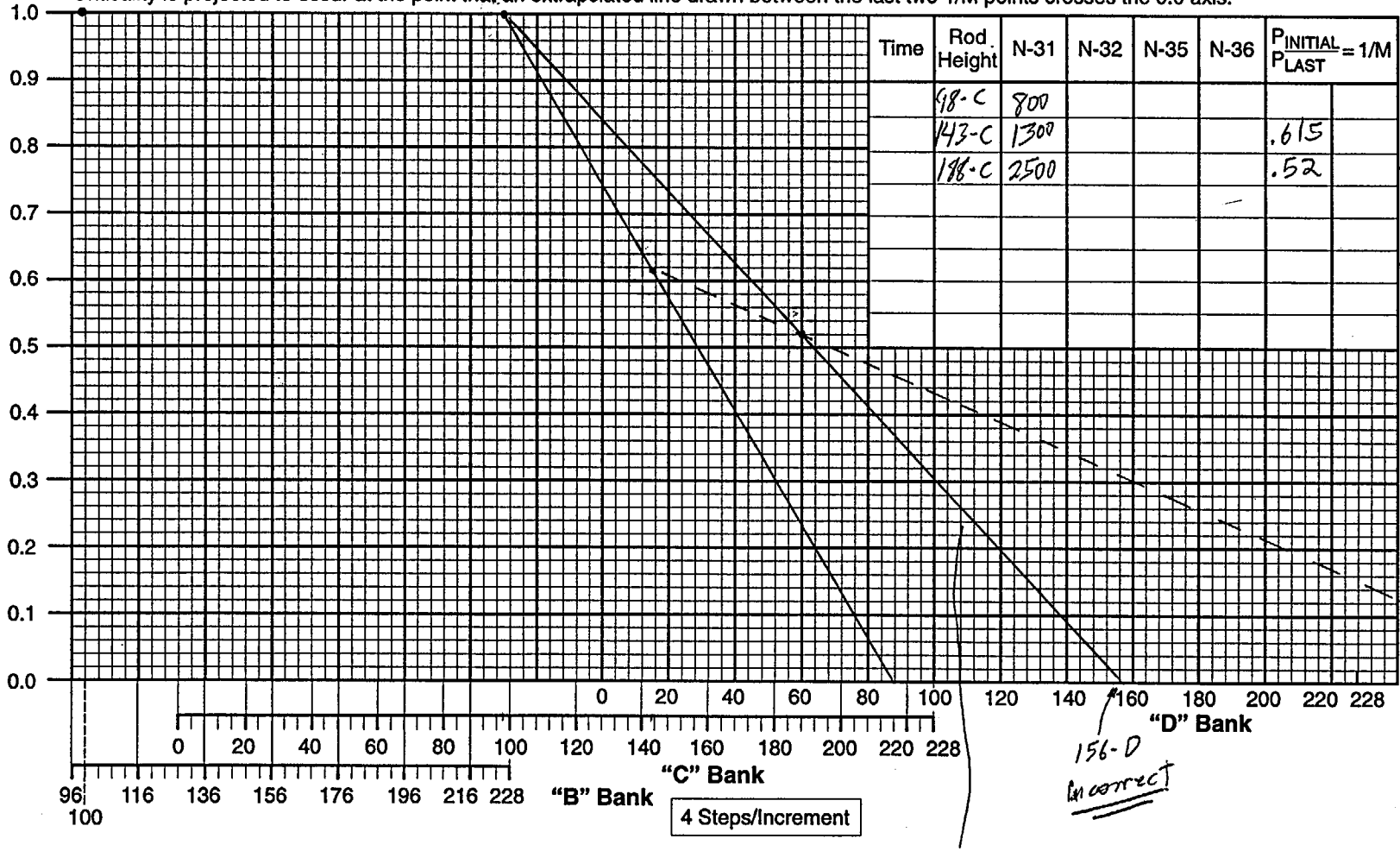

Time	Rod Height	N-31	N-32	N-35	N-36	$\frac{P_{INITIAL}}{P_{LAST}} = 1/M$	
	98-C	800					
	143-C	1300				.615	
	188-C	2500				.52	

incorrectly divided $\frac{1300}{2500}$ vs the correct $\frac{800}{2500}$

156-D incorrect

line drawn incorrectly (should have been shown in dashes)

Graphics No: BP531C

41

distractor

ATTACHMENT 4
(Page 1 of 1)
1/M PLOT

Criticality is projected to occur at the point that an extrapolated line drawn between the last two 1/M points crosses the 0.0 axis.

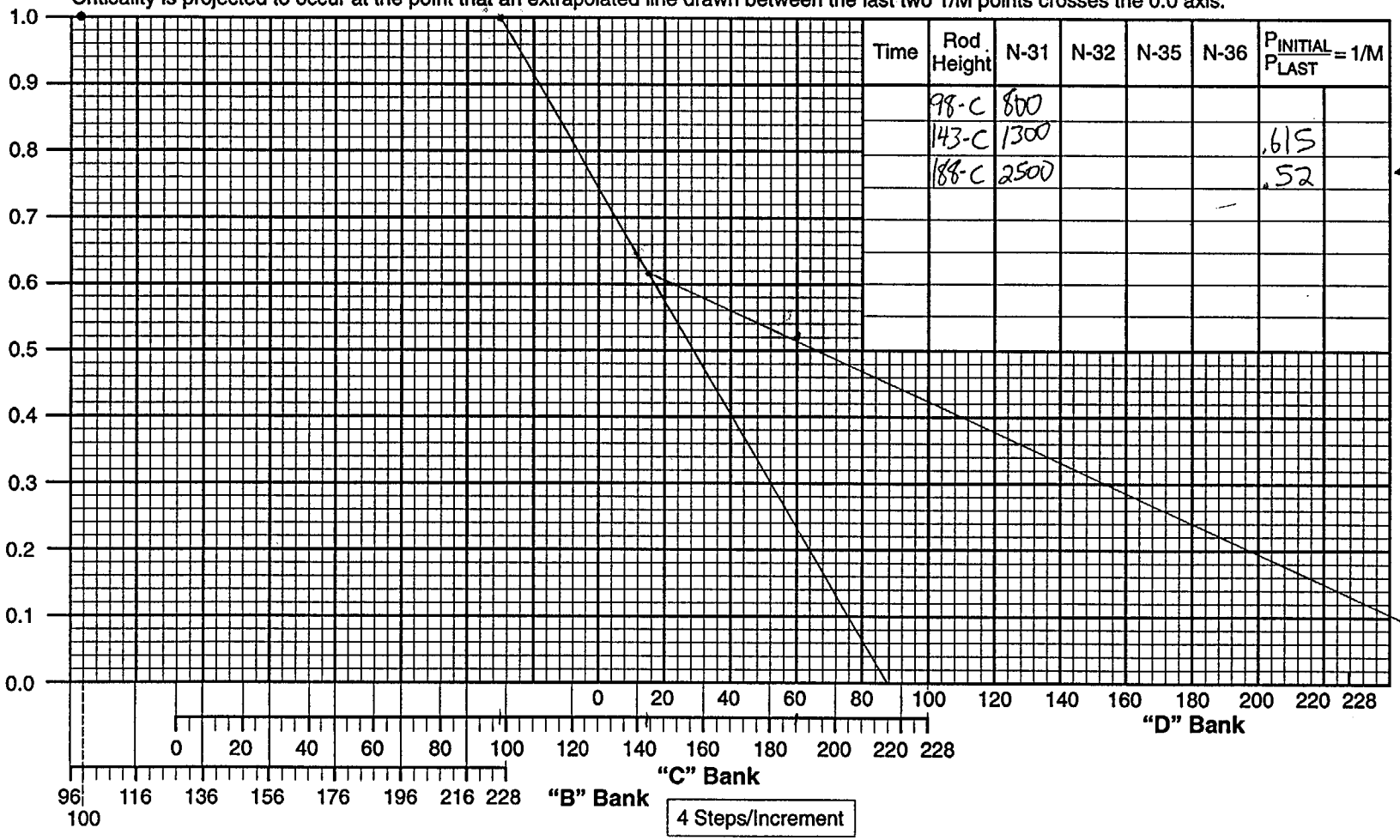

Time	Rod Height	N-31	N-32	N-35	N-36	$P_{INITIAL}/P_{LAST}$ = 1/M	
	98-C	800					
	143-C	1300				.615	
	188-C	2500				.52	

incorrectly divided
$\frac{1300}{2500}$
vs.
the correct
$\frac{800}{2500}$

→ 228-D
incorrect

Graphics No: BP531C

ATTACHMENT 4

(Page 1 of 1)

1/M PLOT

Criticality is projected to occur at the point that an extrapolated line drawn between the last two 1/M points crosses the 0.0 axis.

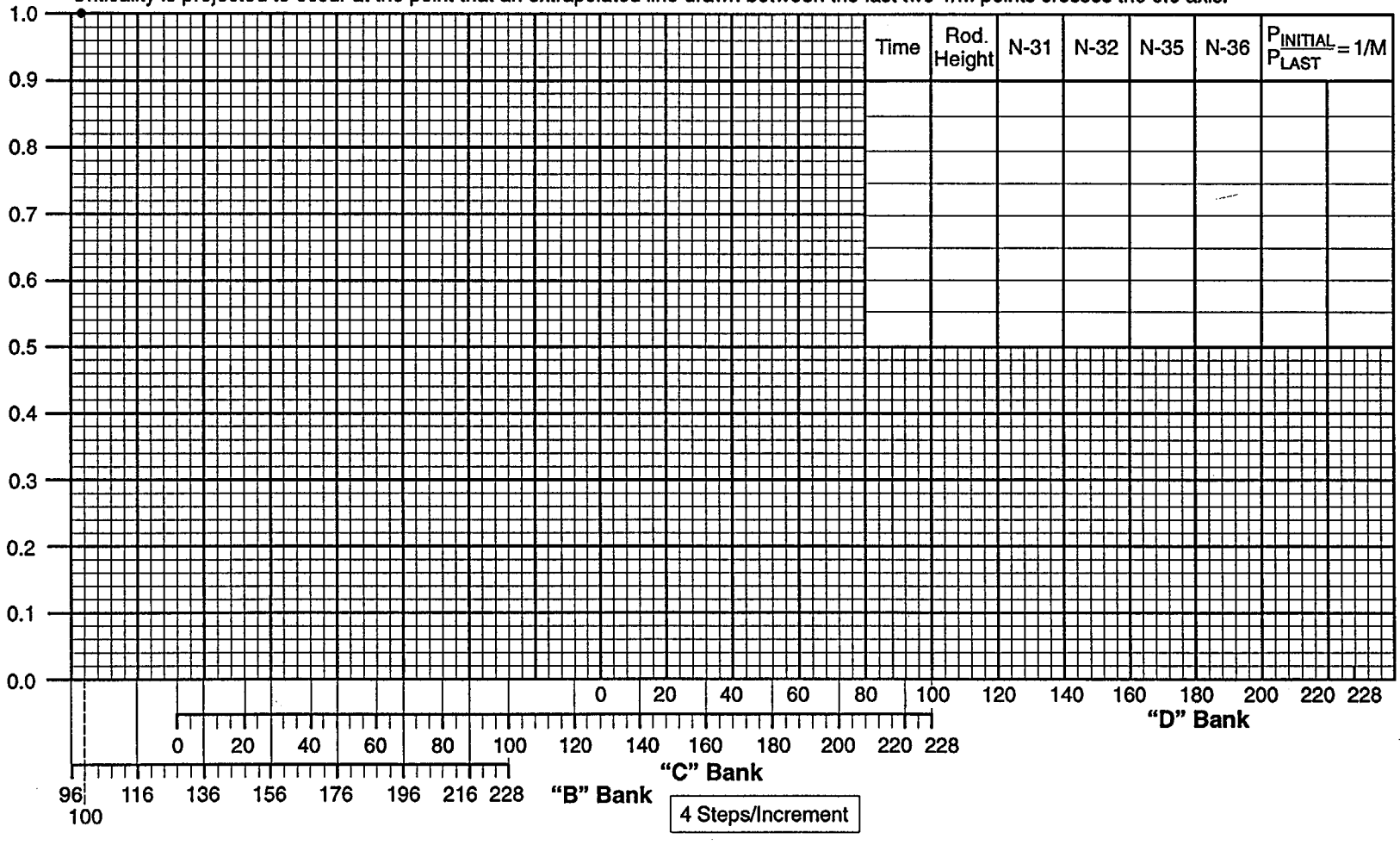

Time	Rod. Height	N-31	N-32	N-35	N-36	$\frac{P_{INITIAL}}{P_{LAST}} = 1/M$	

Graphics No: BP531C

42.
Which ONE of the following is **NOT** a function provided by the Chemical and Volume Control System?

a) Purify spent fuel pit water.

b) Makeup to spent fuel pit.

c) RCS solid plant pressure control.

d) RCS inventory control during mid-loop operations.

K/A: SYS004.G.4 (GEN2.1.27) 10CFR: 41.7

Level: Knowledge, an ability to recall system interaction is required.

Origin: NEW Applicability: BOTH

References: NCRODP-41-LP-1 Objective

Correct Answer: a)

Plausible distractors:

b) SFP makeup can be provided using other means besides CVCS.

c) Normal pressure control is via the pressurizer pressure control system. A knowledge of pressure control during solid plant conditions, specifically the use of 1-CH-PCV-1145 is required.

d) Due to charging pumps being secured, a knowledge of VCT float is required to discount this answer.

A. Purposes of CVCS

1. Provide make-up to the RCS due to normal system losses

2. Purify RCS coolant

3. Supply filtered seal water to the RCPs

4. Provide a means of adding chemicals to the RCS

5. Provide a means of changing the RCS boron concentration as a chemical shim

6. Provide oxygen control

7. Provides for continuous recirculation of boric acid through the boron injection tank (BIT)

8. Provides make-up to the spent fuel pit and RWST

9. Provides for emergency boration of the RCS

10. RCS solid plant pressure control using letdown pressure control valve CH-PCV-1145

11. RCS inventory control during mid-loop operations (VCT float)

12. When called upon the system becomes part of the ECCS to inject concentrated boric acid into the RCS and make-up water to keep the core covered

B. Design Features of Letdown Portion of the CVCS from RCS to Containment Penetration

1. Overview

a. CVCS system is the operators interface with the RCS.

b. Basic arrangement is as follows:

(1) Letdown from the RCS (From A loop Tc)

43.
Which ONE of the following conditions would result in automatic initiation of main steamline isolation?

a) Containment pressure protection channel I fails high with channel II failed and in TEST.

b) Containment pressure protection channel II fails high with channel III failed and in TEST.

c) Containment pressure protection channel I fails high with channel III failed and in TEST.

d) Loss of power to the "A" and "B" train ESF slave relay cabinets.

K/A: SYS013.K6.01 10CFR: 41.7/45.5 to 45.8

Level: Knowledge.

Origin: NEW Applicability: BOTH

References: NA-DW-5655D33 Sh.8 Objective 4065

Correct Answer: b)

Plausible distractors:

a),c) While the logic for steamline isolation is 2/3, the system uses channels II, III, and IV. Channel I is used for CDA actuation only.

d) Loss of power to the input side (instruments, bistables, etc) would cause an actuation, but loss of power to the slave relays actually prevents an actuation.

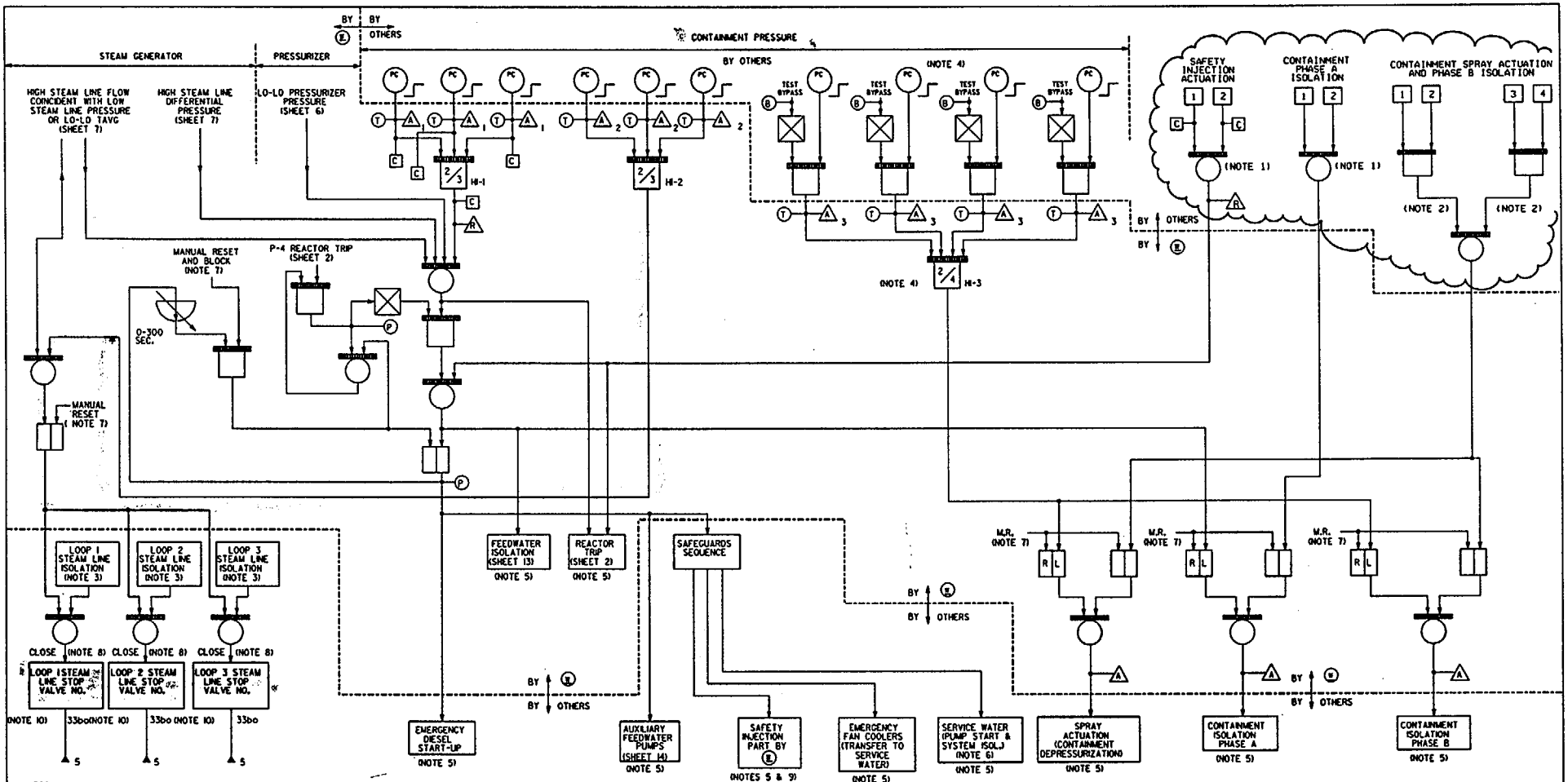

NOTES:

1. TWO MOMENTARY CONTROLS; OPERATING EITHER CONTROL WILL ACTIVATE.
2. TWO MOMENTARY CONTROLS; ACTUATION IS EFFECTED ONLY IF BOTH CONTROLS ARE OPERATED SIMULTANEOUSLY.
3. ONE MOMENTARY CONTROL PER LOOP ON THE CONTROL BOARD.
4. CONTAINMENT PRESSURE BISTABLES FOR SPRAY ACTUATION ARE "ENERGIZE TO ACTUATE", (OTHER BISTABLES ARE "DE-ENERGIZE TO ACTUATE").
5. COMPONENTS ARE ALL INDIVIDUALLY SEALED IN (LATCHED), SO THAT LOSS OF THE ACTUATION SIGNAL WILL NOT CAUSE THESE COMPONENTS TO RETURN TO THE CONDITION HELD PRIOR TO THE ADVENT OF THE ACTUATION SIGNAL.
6. SERVICE WATER SYSTEM ISOLATION IS USED ONLY IF REQUIRED.
7. THE REDUNDANT MANUAL RESET CONSISTS OF TWO MOMENTARY CONTROLS ON THE CONTROL BOARD, ONE FOR EACH TRAIN.
8. ALSO CLOSES THE BYPASS VALVE IN PARALLEL WITH THE ASSOCIATED STEAM LINE STOP VALVE.
9. NUCLEAR STEAM SUPPLY SYSTEM SEQUENCE REQUIREMENTS SPECIFIED BY
10. LIGHTS SHOULD BE PROVIDED IN THE CONTROL ROOM FOR EACH STEAMLINE STOP VALVE TO INDICATE WHEN THE VALVE IS FULLY CLOSED OR FULLY OPEN.

REV	DESCRIPTION	DRWN	CHKD	SUPL	DATE	REV	DESCRIPTION	DRWN	CHKD	SUPL	DATE	REV	DESCRIPTION	DRWN	CHKD	SUPL	DATE
2	REVISED PER DWR 94-176 THIS DWG SUPERSEDES REV 1 ORIGINAL	CMF				1	REVISED PER DC 93-124 THIS DWG SUPERSEDES REV 0 ORIGINAL	CML	LBR	PAP	10-7 93	0	ORIGINAL ISSUE	LL	JJG	JAR	8-15 86

HIGHEST EQUIPMENT CLASSIFICATION ON THIS DWG IS SAFETY RELATED

NUCLEAR STEAM SUPPLY SYSTEM
FUNCTIONAL DIAGRAMS
SAFEGUARD ACTUATION SIGNALS
UNITS 1& 2

VIRGINIA POWER
NORTH ANNA POWER STATION

DRAWING NUMBER: NA-DW-5655D33 SH 8 OF 16 REVISION 2

PRIOR TO USING FOR DESIGN WORK CHECK DMIS FOR WORK PENDING

7-OCT-1997 15:52

44.
Using the attached in-core flux map for reference, which ONE of the following identifies the cause of the large perturbation at point "A"?

a) Region of high fuel enrichment.

b) Region of low fuel enrichment.

c) Region of partial core boiling.

d) Grid strap location.

K/A: SYS015.K5.09 10CFR: 41.5/45.7

Level: Comprehension

Origin: NEW Applicability: BOTH

References:

Correct Answer: d)

Plausible distractors:

a) The perturbation goes in the wrong direction.

b) With the absence of grid straps this would be a logical choice for the cause. In this case the magnitude and existence of other perturbations leads to only one viable cause.

c) The perturbation goes in the wrong direction.

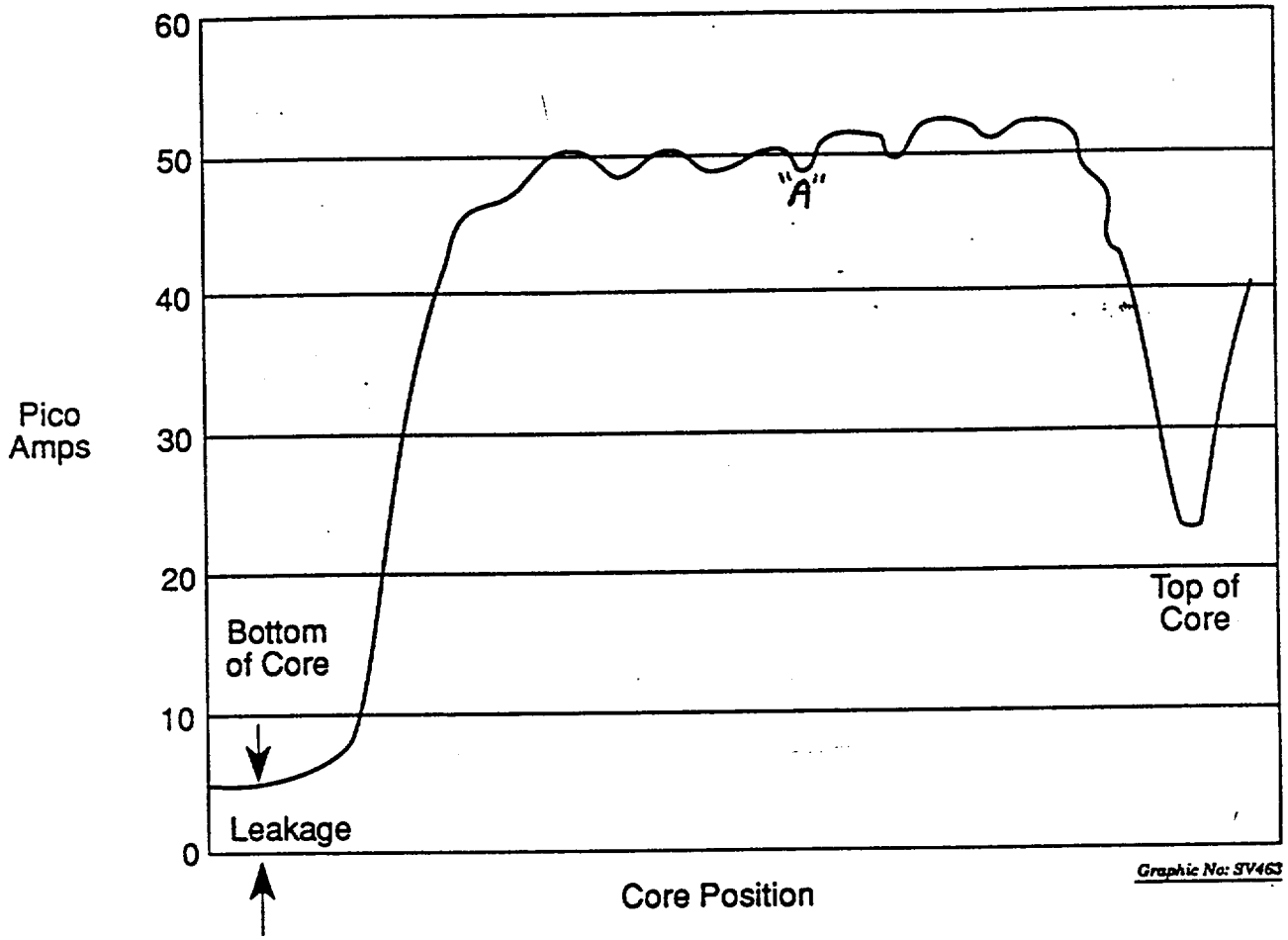

GAMMA RESPONSE TRACE

(1) During detector insertion operations, the drive runs at high speed until the bottom core limit is reached, at which time the detector stops. The SCAN pushbutton is pressed which causes the detector to scan slow speed to the top core limit.

(2) When the detector is at the top core limit, the withdrawal button is pressed. The detector is withdrawn from the core to the bottom core limit at slow speed. The drive will operate in fast speed when the detector is withdrawn from the bottom core limit back through the five path.

(3) The in-core detector trace will record the neutron flux in a drawing that will show a mirror image. This mirror image is due to the fact that the recorder will trace on both insertion and withdrawal. The drawing will start at the bottom of the core, proceed upward during the insertion phase, record the flux level along the length of the assembly, and pause at the top of the core. The withdrawal phase of the recording will proceed until the detector reaches the bottom of the core.

Point out on transparency the following points of interest:

- difference in trace level for inner and outer assemblies
- flux depression spots for grid strap absorption
- flux depression spots for rodded assembly absorption
- flux depression spots for fuel assembly bottom support plate

45.
With the unit at 100% power, a control rod is suspected of partially dropping into the core. Currently the control rod indicates approximately 40 steps by individual rod position indication. This control rod is located adjacent to power range nuclear instrument N-44. Which ONE of the following selections is correct concerning diagnosis of the mispositioned rod?

a) The N-44 benchboard meter reads higher than the other three.

b) All power range nuclear instruments will read slightly lower than pre-event values.

c) NEGATIVE RATE TRIP bistable status light on N-44 illuminated.

d) N-44 delta flux indicates more positive.

K/A: SYS015A2.04 10CFR: 41.5/43.5/45.3/45.5

Level: Comprehension.

Origin: NEW Applicability: BOTH

References: NCRODP-91-LP-1 Objective 11029

Correct Answer: c)

Plausible distractors:

a) Power would be depressed in this region of the core. However, if the trainee determined the flux around the stuck rod needed to be overcome, it is plausible that N-44 would read higher.

b) Overall power will not decrease, it will be distributed. Because power is lost in this region it could be misconceived overall core power must increase to overcome.

d) Local flux would be driven to the bottom, however since power is distributed , it is plausible that overall flux will shift to the top.

E. Each of the following plant parameters change in response to a dropped (or severely misaligned LOW) control rod that does not cause a reactor trip while the unit is at power:

1. Indicated reactor power will decrease by varying amounts as indicated by the PRNIS due to rod shadowing and the relationship between the dropped rod and detector location. A noticeable tilt/imbalance may be indicated due to the proximity of the dropped rod to the detectors.

2. Actual reactor power should remain constant if steam demand does not change unless the corresponding decrease in T_{avg} causes steam pressure to decrease low enough to reduce steam demand. (This should not be the case with minimal SG tube plugging, adequate initial SG pressure and "room" for the governor valves to open in response to the decrease in steam pressure.)

3. Reactor Coolant System ΔT will remain constant if actual power does not change. If power does decrease (for the reasons noted above), ΔT will correspondingly decrease.

4. T_{avg} will decrease to provide positive reactivity (in response to the negative reactivity inserted by the dropped rod) to maintain the reactor critical.

5. Pressurizer level will decrease in response to the reduced T_{avg} due to "shrinkage" of the RCS as well as the decrease in the programmed pressurizer level that corresponds to the reduced T_{avg}.

6. Pressurizer pressure will decrease in response to the reduced T_{avg} until the heaters can restore the system to normal operating pressure.

7. Axial flux will shift upward due to the greater amount of positive reactivity inserted in the top of the core due to the T_{avg} decrease (greater fractional change in density at the top of the core than at the bottom of the core).

F. It is important to use all indications to verify that a rod has actually dropped when a single indication occurs which suggests that a rod may have dropped. No single indication should be relied upon without verification from multiple indications:

1. Rod bottom light/Individual rod position indication
2. Decrease in T_{avg}
3. Rapid decrease in reactor power
4. Rapid decrease in pressurizer pressure and level
5. Associated annunciators:

   a. RPI ROD BOT ROD DROP
   b. CMPTR ALARM PR TILT ROD DEV/SEQ
   c. NIS PR CHNL AVE FLUX DEVIATION
   d. NIS PR UP/LWR DET DEV-DEF <50%
   e. NIS PR HI FLUX RATE CH I-II-III-IV

G. High-level Action Steps

1. Verify that only one control rod has dropped.

   a. Multiple dropped control rods should cause a reactor trip due to negative flux. If this does not occur, a reactor trip is initiated to place the unit in a safe condition.

2. Place the control rod bank selector switch in MANUAL.

   a. This step is performed to prevent outward control rod movement in

46.
Which ONE of the following is correct concerning the power supply arrangement to the containment air recirc fans?

a) "A" – 1A 480V bus; "B" – 1B 480V bus; "C" 1C 480V bus.

b) "A" – 1H1 480V bus; "B" 1J1 480V bus; "C" – 1H 480V bus.

c) "A" – 1A 480V bus; "B" – 1B 480V bus; "C" either 1A or 1B 480V bus.

d) "A" – 1H1 480V bus; "B" – 1J1 480V bus; "C" – either 1H or 1J 480V bus.

K/A: SYS022.K2.01 10CFR: 41.7

Level: Knowledge, a memorization of power supplies is required.

Origin: Vision #3363 Applicability: BOTH

References: NCRODP-47-LP-1 Objective 4478

Correct Answer: d.

Plausible distractors:

a) Most ventilation equipment is powered from station service.

b) "C" fan is **normally** powered from 1H 480V bus.

c) Most ventilation equipment is powered from station service; "C" fan power supply is selectable.

WWW. The containment recirculation air fans draw air across the recirculation air coolers the air is then drawn through the fan and then discharged through the discharge damper to the ring duct. [4477]

Display H/T-1.1: Containment Ventilation Subsystem. Trace flow path of the system as needed.

XXX. Information as it applies to the containment air recirculation units. [4478]

1. Power supply for each fan

   Fan 1A is powered from 1H1 emergency bus

   Fan 1B is powered from 1J1 emergency bus

   Fan 1C is powered from 1H or 1J emergency bus.

2. Position to which a fan's discharge damper fails on a loss of instrument air

   Fails closed on a loss of instrument air.

3. Interlock conditions required to start a fan

   No undervoltage/Degraded voltage signal, for the past 30 seconds (30 sec TD for A, and B fan only)

   No CDA signal exists

VISION #3363

46

1. 1.00 Pts.

Which one of the following responses correctly lists the power supplies to containment air recirculation fans "A," "B," and "C," respectively?

A. "A" -- 1H emergency bus; "B" -- 1J emergency bus; "C" -- either 1H or 1J emergency bus

B. "A" -- 1A station service bus; "B" -- 1B station service bus; "C" -- either 1A or 1B station service bus

C. "A" -- 1H emergency bus; "B" -- 1J emergency bus; "C" -- 1H emergency bus

D. "A" -- 1A station service bus; "B" -- 1B station service bus; "C" -- 1C station service bus

Answer: A.

47.
The following conditions exist on unit 1:

- 100% power operation
- Maintenance has been completed on "B" condensate pump
- All tags on "B" condensate pump have been cleared and the MOP is completed
- The crew is preparing to place "B" condensate pump in service per 1-OP-30.1
- "B" condensate pump is still in PULL-TO-LOCK
- "A" condensate pump trips and annunciator F-B6, "Main Fd Pps Suct Hdr Lo Press," illuminates

Which ONE of the following is correct concerning the crew's response to this event?

a) Start "B" condensate pump.

b) Trip the reactor and perform the immediate operator actions of 1-E-0.

c) Enter 1-AP-2.2 and reduce turbine load until feedwater pump suction pressure is adequate.

d) Start "B" condensate pump and reduce turbine load until feedwater pump suction pressure is adequate.

K/A: SYS056.A2.04 10CFR: 41.5/43.5/45.3/45.13

Level: Comprehension.

Origin: NEW Applicability: BOTH

References: 1-AP-31 Objective 14561

Correct Answer: a)

Plausible distractors:

b) Tripping the reactor is required if two FW pumps can't be started, condensate pump requirements are based on FW pump suction pressure.

c) Reducing turbine load **does** increase FW pump suction pressure, and using AP-2.2 would be a logical choice to perform the actions rapidly.

d) Starting the "B" condensate **is** required; reducing turbine load would increase FW pump suction pressure, but would not be necessary if "B" condensate pump can be started.

STEP	ACTION/EXPECTED RESPONSE	RESPONSE NOT OBTAINED
[1]	__CHECK MFW PUMP STATUS:	
	a) Reactor Power - GREATER THAN 70%	a) IF at least one MFW Pump is running, THEN GO TO Step 2. IF NO MFW Pumps are running, THEN trip Reactor and Turbine and GO TO 1-E-0, REACTOR TRIP OR SAFETY INJECTION.
	b) Two MFW Pumps - RUNNING	b) IF a second MFW Pump cannot be immediately started, THEN trip Reactor and Turbine and GO TO 1-E-0, REACTOR TRIP OR SAFETY INJECTION.
[2]	__CHECK MFW SUCTION PRESSURE - AT LEAST 300 PSIG (see 1-AR-F-B6)	Start an additional Condensate Pump.

STEP	ACTION/EXPECTED RESPONSE	RESPONSE NOT OBTAINED

* *

CAUTION: • Turbine ramp rates must be limited to 5%/minute or less.

• Control rods should be maintained above insertion limits.

* *

NOTE: Ramp rates close to 5%/minute may cause the Steam Dumps to arm.

3. __	EVALUATE REDUCING TURBINE LOAD TO LESS THAN 55% POWER:	
	a) Verify ONLY ONE MFW Pump - RUNNING	a) GO TO Step 4.
	b) Check Reactor Power level - GREATER THAN 55%	b) GO TO Step 4.
	c) Check Turbine load control:	
	1) Verify Turbine valve position - OFF VALVE POSITION LIMITER	1) Take Turbine off Valve Position Limiter.
	2) Verify Turbine Load Control in IMP-IN.	2) Place Turbine Load Control in IMP-IN by depressing the IMP-IN pushbutton.
	d) Reduce Turbine load to 50-55% using OPERATOR AUTO or TURBINE MANUAL	
	e) Insert Control Rods in AUTO or MANUAL as required to maintain Tavg within 5°F of Tref	
	f) Borate as required to maintain final Control Rod position above insertion limits	
	g) Energize additional PRZR Heaters as required to maintain PRZR Pressure above 2205 psig	
	h) Monitor Steam Dumps for proper operation	

STEP	ACTION/EXPECTED RESPONSE	RESPONSE NOT OBTAINED
* 4.	__STABILIZE SG LEVELS:	
	a) Verify steam flow - LESS THAN AVAILABLE FEED FLOW	a) Reduce Turbine load.
	b) Verify SG levels - AT OR TRENDING TO PROGRAM LEVEL	b) Place associated valves in MANUAL and control SG levels: • Main Feed Reg Valves • Main Feed Reg Bypass Valves
* 5.	__VERIFY ACCEPTABLE MFW PUMP PERFORMANCE:	
	a) Verify MFW Motor amps - LESS THAN 550 AMPS ON EACH MOTOR	a) Reduce Turbine load.
	b) Verify Annunciator Panel F-B5, MAIN FD PPS LO DIFF PRESS - NOT LIT	b) Reduce Turbine load.
6.	__MAINTAIN STABLE PLANT CONDITIONS	
7.	__CHECK IF ISOTOPIC ANALYSIS OF RCS IS REQUIRED:	
	a) Check Reactor Power - HAS DECREASED MORE THAN 15% IN ONE HOUR	a) GO TO Step 8.
	b) Have Chemistry perform isotopic analysis of RCS for iodine within 2 to 6 hours	

NUMBER	PROCEDURE TITLE	REVISION
1-AP-31	LOSS OF MAIN FEEDWATER	1
		PAGE 5 of 5

STEP	ACTION/EXPECTED RESPONSE	RESPONSE NOT OBTAINED
8.	__MAKE NOTIFICATIONS: • STA • Operations Manager On Call • System Operator • Other notifications as required by VPAP-2802, NOTIFICATIONS AND REPORTS	
9.	__INVESTIGATE REASON FOR LOSS OF FEEDWATER: a) Have Operator locally check the following as required: • MFW Pump that auto-started • MFW Pump that tripped • Breakers for tripped MFW Pump • Condensate Pump that was started b) Verify non-isolated Main Feedwater Pump Recirc Valves - NOT FAILED • 1-FW-FCV-150A • 1-FW-FCV-150B • 1-FW-FCV-150C c) Check for unexplained increase in FW Heater level d) Walk down Condensate and Feedwater systems as required	b) Locally isolate failed FCV(s) by closing the following as applicable: • 1-FW-292 (1-FW-FCV-150A) • 1-FW-293 (1-FW-FCV-150B) • 1-FW-294 (1-FW-FCV-150C)
10.	__INITIATE ANY REQUIRED WORK REQUESTS	
11.	__RETURN TO PROCEDURE AND STEP IN EFFECT	

- END -

MAIN FD PPS SUCT HDR LO PRESS

NOTE: 280 psig
This is the MFW pump trip setpoint after the following time delay
A MFP - 40 sec
B MFP - 55 sec
C MFP - 70 sec

1.0 Probable Cause

- 1.1 Loss of HP or LP Heater Drain Pump
- 1.2 Feed Train transient
- 1.3 Failure of Main Condensate Pump

2.0 Operator Action

- 2.1 Verify auto-start of standby Main Condensate Pump.
- 2.2 Check operation of Main Condensate Pumps:
  - * Amperage
  - * Discharge pressure
  - * Suction strainer differential pressure
- 2.3 Check operation of HP and LP Heater Drain Pumps.
- 2.4 Verify proper operation of Steam Generator Level Control System and feedwater FCVs.
- 2.5 Verify operation of 1-CN-FCV-107 (Condensate Recirc Valve) and 1-CN-LCV-108 (Condenser HLD valve).

3.0 References

- 3.1 Instrument Test Loops (CN page 41)
- 3.2 DCP 88-16-3

4.0 Actuations

- 4.1 1-CN-PSL-150A-3
- 4.2 1-CN-PSL-150B-3
- 4.3 1-CN-PSL-150C-3

48.
During 20% power operation, selected first stage impulse pressure transmitter 1-MS-PT-446 fails low. Which ONE of the following identifies the effect on the steam generator level control system?

a) Steam generator levels decrease to 33%.

b) Steam generator levels increase to 44%.

c) Steam generator levels remain at 44%.

d) Steam generator levels remain at 33%.

K/A: SYS059.K1.04 10CFR: 41.2 - 41.9

Level: Comprehension.

Origin: NEW Applicability: Both

References: NCRODP-26C-LP-1 Objective 8821

Correct Answer: a.

Plausible Distractors:

b,c,d Given the low power level, the program level setpoint may be confused.

Display H/T-1.13 or H/T-1.15, SGWLC, and discuss the failures noted below, one loss at a time. Assume: "Loss means fails low", discuss short-term immediate response, and then discuss the "what-ifs" such as needed operator intervention for each example.

Learning Activity (time permitting H/T-1.16): Consider dividing class into four break out groups with each group taking two of the eight items noted, discussing it, and then a spokes person presenting a broadened discussion to the re-assembled class. This would be to help them get their heads really into the material instead of just taking notes.

1. Loss of steam pressure compensation - Volume flow rate of steam is not converted to mass flow rate of steam, without the density compensation steam flow rate would be artificially low, therefore **STEAM FLOW < FEED FLOW, MFRV** would throttle in the shut direction.

2. Loss of steam flow input - **FEED FLOW < STEAM FLOW, MFRV** would throttle in the shut direction.

3. Loss of feed flow input - **STEAM FLOW < FEED FLOW, MFRV** would throttle in the open direction.

4. Loss of first stage pressure input - **PROGRAM LEVEL < ACTUAL LEVEL, MFRV** would throttle in the closed direction, the level reduction would be to the minimum setpoint of 33%.

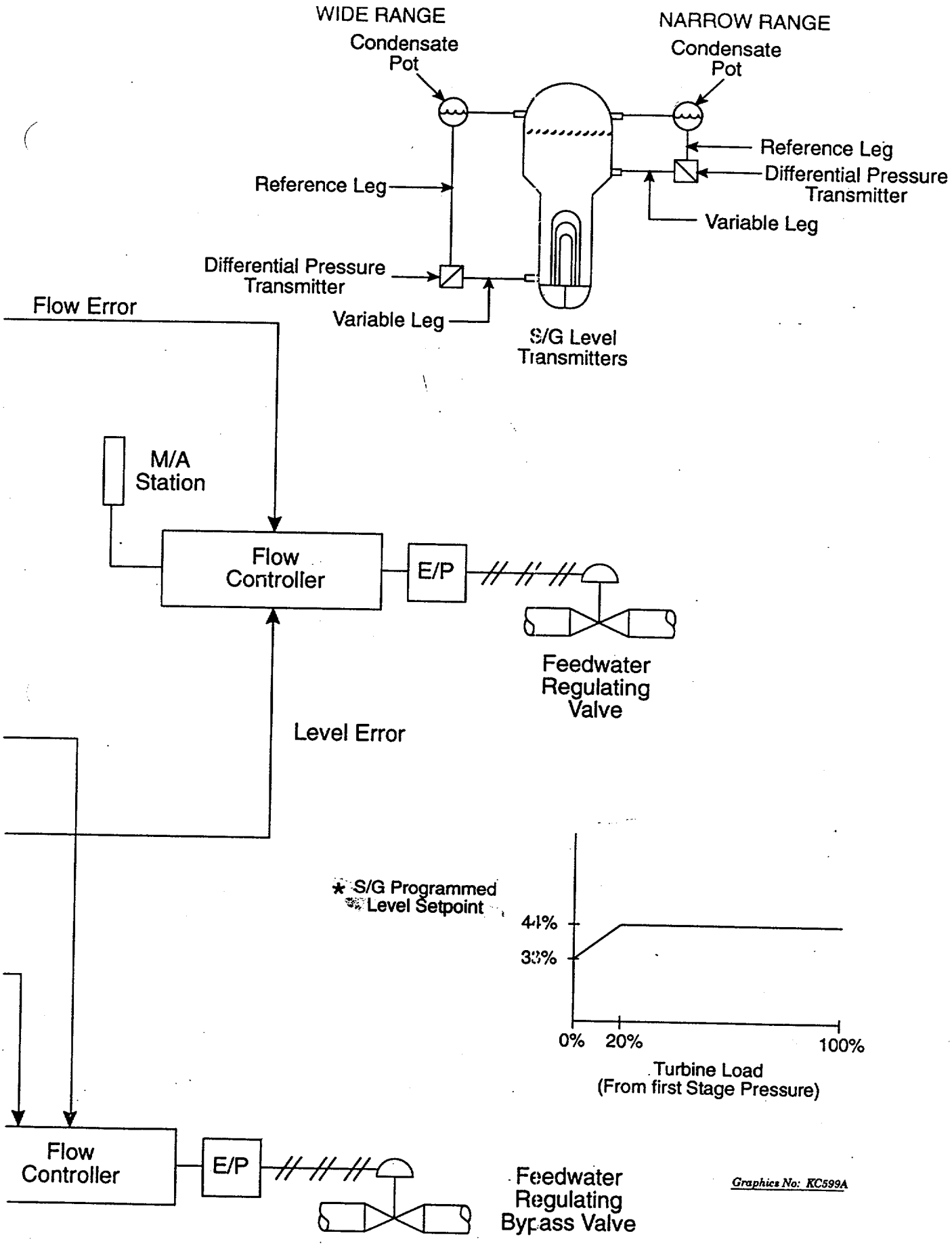

FIGURE 26-9-NA
STEAM GENERATOR LEVEL CONTROL SUBSYSTEM BLOCK DIAGRAM
11-27-92

49.
Which ONE of the following identifies the purpose of isolating AFW to a faulted S/G?

a) Minimize thermal stresses on the S/G tubes.

b) Minimize RCS cooldown.

c) Prevent underfeeding the intact S/Gs.

d) Minimize AFW pump runout.

K/A: SYS061.K1.04 10CFR: 41.2 to 41.9/45.7 to 45.8

Level: Knowledge

Origin: NEW Applicability: BOTH

References: NCRODP-92-LP-4 Objective 13705

Correct Answer: b)

Plausible distractors:

a) S/G tube thermal stresses are a major concern in many accidents. In this case isolating AFW potentially exacerbates the thermal stresses across the tubes if feed flow must be reinitiated to the faulted S/G after dryout occurs.

c) This would be true of MFW which shares a common supply header; AFW has dedicated flowpaths (one pump to one S/G).

d) Reducing flow through a pump does minimize the chance for pump runout; AFW pumps have design features in the piping to prevent runout.

STEP 3

An uncontrolled SG pressure decrease (following MSTV closure and FW isolation) or a completely depressurized SG indicates an unisolable failure of the secondary pressure boundary. If it is not identified through here, than various locations in the RNO column are checked.[13705]

STEP 4 (NOTE)

An Admin Key may be required to locally close AFW isolation valves.

STEP 4

Faulted SG feedwater isolation maximizes the cooldown capability of the non-faulted loops following a feed-line break, and minimizes RCS cooldown and mass and energy release following a steam line break. Isolation of steam paths from the faulted SG also minimizes the RCS cooldown and mass and energy release to containment. In addition, isolation of these paths could isolate the break. Remembering the earlier caution, any faulted SG should remain isolated during subsequent recovery actions unless needed for RCS cooldown.[13705]

MFW Reg Valve closure indicated by limit position lights not by controller demand. If cooldown continues than locally isolate the MFW Reg and bypass valves.

STEP 5

When ECST level decreases below 40%, inadequate suction pressure may result in AFW pump trip. AP 22.5, "Loss of Emergency Condensate Storage Tank 1-CN-TK-1" is addressed if inadequate level exists.

50. (Reference provided)
Following a unit 1 reactor trip from 100% power, the following conditions exist:

- 1-FW-P-2 started and tripped on overspeed
- Main FW pumps are aligned as they were prior to the trip
- Total AFW flow to "B" and "C" S/Gs is 400 gpm
- "A" S/G wide-range level is decreasing
- All S/Gs are off-scale low on narrow-range indicators

Which ONE of the following is correct concerning restoration of Main FW in accordance with 1-ES-0.1, "Reactor Trip Response?"

a) Main FW flow to "A" S/G must not be established until step 14.

b) Main FW flow to "A" S/G should be established at step 3.c using the FRV B/P.

c) Main FW flow to "A" S/G should be established at step 1.d (RNO) using the FRV B/P.

d) Main FW flow to "A" S/G may be established only after a motor-driven AFW pump is aligned to feed "A" S/G.

K/A: SYS061.A2.01 10CFR: 41.5, 43.5

Level: Comprehension

Origin: NEW Applicability: Both

References: 1-ES-0.1 Objective 12478

Correct Answer: c)

Plausible Distractors:

a. Step 3 note states that MFW B/P valves shouldn't be used if AFW is in service; interpretation of the note is the issue; AFW is not in service to "A" S/G.

b. Step 3.c (RNO) does address establishing Main FW flow on the B/P, but only if heat sink is not verified.

d. Since step 14 requires all S/Gs to be above 20% N/R level, misinterpretation of the step 3 notes could lead to belief that MFW cannot be used until all S/Gs are aligned to receive AFW flow.

AF. ES-0.1 Overview

1. Purpose of ES-0.1 is to provide necessary instructions to stabilize and control the plant following a reactor trip without safety injection.

2. ES-0.1 is applicable if the unit was initially in modes 1 or 2.

3. Entry into ES-0.1 is from step 4 of 1-E-0.

4. Major Action Categories:

   a. Ensure primary system stabilizes at no-load conditions.

   b. Ensure the secondary system stabilizes at no-load conditions.

   c. Ensure necessary components have power available.

   d. Maintain/establish forced circulation of RCS.

   e. Maintain plant in a stable condition.

AG. Verify total feed flow to steam generators

1. Basis - verification of proper feedwater alignment following a reactor trip ensures the secondary heat sink is intact and no uncontrolled cooldown occurs from excessive SG feed flow.

2. Auxiliary feedwater flow is adjusted to 400 gpm with RCPs running (340 gpm without RCPs) to restore S/G levels without excessive cooldown.

   a. 340 gpm will remove design basis decay heat.

b. 400 gpm is for added RCP heat. Other guidelines specify 340 gpm regardless of RCP status, since SI flow will remove RCP heat in other ERG procedures. ES-0.1 has no SI flow.

3. All steam generator wide range levels are verified to be increasing for two reasons.

   a. Ensures sufficient AFW flow is provided to remove decay heat and restore S/G levels to adequate.

   b. Ensure symmetric cooling of the RCS - if all feedwater flow were to be directed to a single steam generator with no RCPs running, this would eventually cause a steam line differential pressure SI.

4. NOTE: If AFW flow is available to two steam generators, but not to the third S/G, then it is acceptable to establish feed flow on the main feed reg. valve bypass valve to achieve an increasing wide range level in that steam generator.

AH. Check RCS average temperature

1. Actions are designed to regulate RCS Tavg to the no-load temperature of 547°F. The trend of the RCS Tavg value indicates the amount of heatup or cooldown occurring and the types of actions required to control Tavg.

2. Any heat input to the RCS will tend to increase Tavg.

   a. A high number of RCPs running, the more heat input.

   b. The longer and higher the recent power level, the more decay heat is

STEP	ACTION/EXPECTED RESPONSE	RESPONSE NOT OBTAINED

* *

CAUTION: An Operator should be sent to locally close and lock 1-CH-217, PG to Blender Isolation Valve.

* *

NOTE: If AFW flow is less than 400 gpm (340 gpm with RCPs off) because of Operator action, then AFW flow may not need to be adjusted in Step 1c.

1.__ VERIFY TOTAL FEED FLOW TO SGs:

a) Verify AFW - IN SERVICE	a) Control feed flow to maintain narrow range levels between 20% and 33%. GO TO Step 2.
b) Verify Main Feed Reg Bypass Valves - CLOSED	b) Manually close valves.
c) Adjust total AFW flow to 400 gpm (340 gpm with RCPs OFF)	
d) Verify all SG wide range levels are increasing	d) IF any SG wide range level is not increasing, THEN increase feed flow to the affected SG.

STEP	ACTION/EXPECTED RESPONSE	RESPONSE NOT OBTAINED
* 2.__	CHECK RCS AVERAGE TEMPERATURE: • STABLE AT 547°F OR • TRENDING TO 547°F	IF temperature is less than 547°F AND decreasing, THEN: a) Stop dumping steam. b) Adjust total AFW flow to 400 gpm (340 gpm with RCPs OFF) until at least one SG narrow range level is greater than 11%. c) IF cooldown continues, THEN close the following: • MSTVs • MSTV Bypass Valves • SG Blowdown Trip Valves IF temperature is greater than 547°F AND increasing, THEN: a) Do the following: • Dump steam to the Condenser OR • Dump steam using SG PORVs OR • Dump steam using Decay Heat Release Valve: 1) Locally open 1-MS-20, Decay Heat Release Valve Upstream Isolation Valve. 2) Manually open 1-MS-HCV-104, Decay Heat Release Valve. b) Control feed flow to maintain narrow range levels between 20% and 33%.

STEP	ACTION/EXPECTED RESPONSE	RESPONSE NOT OBTAINED

NOTE:
- When AFW is in service, then AFW is the preferred source of feed to SGs.
- If AFW is in service, then feed flow on Main Feed Bypass Valves should not be established until Step 14.
- If an SG HI-HI Level has occurred, then Main Feed Reg Bypass Valves will not reopen until the HI-HI level has cleared and FW Bypass Isolation has been reset.

3.__	CHECK FEEDWATER STATUS:	
	a) Check RCS average temperature - LESS THAN 554°F	a) WHEN temperature is less than 554°F, THEN do Steps 3b and 3c. Continue with Step 4.
	b) Verify Main Feed Reg Valves - CLOSED	b) Manually close valves.
	c) Verify total feed flow to SGs: • Total AFW flow - GREATER THAN OR EQUAL TO 400 GPM (340 GPM WITH RCPs OFF) OR • Main Feedwater flow to at least one SG - GREATER THAN 0.7×10^6 LBM/HR	c) Establish feed flow to the SGs as necessary: • AFW OR • Main Feedwater on bypass.
4.__	VERIFY ADEQUATE HP TURBINE GLAND STEAM PRESSURE ON 1-MS-PI-131	Throttle 1-MS-MOV-106, GLAND STEAM DUMP BYPASS VALVE.

STEP	ACTION/EXPECTED RESPONSE	RESPONSE NOT OBTAINED

NOTE:
- Total feed flow may be reduced as desired when narrow range level in at least one SG is greater than 11%.
- Adequate feed flow to cause an increase in SG wide range level should be maintained to any SG that is less than 11% narrow range level.

9.__ CHECK SG LEVELS:

a) Narrow range level in at least one SG - GREATER THAN 11%	a) Maintain total AFW flow greater than or equal to 400 gpm (340 gpm with RCPs off) until narrow range level is greater than 11% in at least one SG.
b) Control feed flow to maintain all SG narrow range levels between 20% and 33%	b) IF narrow range level in any SG continues to increase, THEN stop feed to that SG.

NOTE: Upon restoration of AC Emergency Busses, the following equipment may be manually loaded as required: CRDM Fans, Containment Air Recirc Fans, and PRZR Heaters.

10.__ VERIFY ALL AC BUSSES - ENERGIZED BY OFFSITE POWER	Initiate 0-AP-10, LOSS OF ELECTRICAL POWER, to restore offsite power.

STEP	ACTION/EXPECTED RESPONSE	RESPONSE NOT OBTAINED
14.	STOP AFW PUMPs:	
	a) Verify all SG narrow range levels - GREATER THAN 20%	a) <u>WHEN</u> all SG narrow range levels are greater than 20%, <u>THEN</u> perform Steps 14b through 14i. Continue with Step 15.
	b) Verify the following systems - IN SERVICE: • Condensate • Feedwater	b) <u>WHEN</u> Condensate <u>AND</u> Feedwater Systems are restored, <u>THEN</u> perform Steps 14c through 14i. Continue with Step 15.
	c) Verify all SG narrow range levels - LESS THAN 75%	c) <u>WHEN</u> all SG narrow range levels are less than 75%, <u>THEN</u> perform Steps 14d through 14i. Continue with Step 15.
	d) Ensure both train's FW Bypass Valve Isolation - RESET	
	e) Establish feed flow using Main Feed Bypass Valves	
	f) Control feed flow to maintain all SG narrow range levels between 20% and 33%	
	g) Reset AMSAC	
	h) Stop AFW Pumps and place in AUTO: • 1-FW-P-2 • 1-FW-P-3A • 1-FW-P-3B	
	i) Open AFW supply valves: • 1-FW-MOV-100D • 1-FW-MOV-100B • 1-FW-HCV-100C	

51.
Which ONE of the following tanks **CANNOT** be aligned to pump **DIRECTLY** to the high-level liquid waste tanks?

a) Contaminated drain tanks.

b) Fluid waste treatment tank.

c) Low level liquid waste tanks.

d) Primary drains transfer tank.

K/A: SYS068.K1.07 10CFR: 41.2 - 41.9

Level: Knowledge

Origin: NEW Applicability: Both

References: NCRODP-43-LP-1 Objective 5016

Correct Answer: d)

Plausible Distractors:

a) CDTs are normally pumped to the clarifier, bypassing high-level waste processing.

b) The FWTT is only required to be pumped to HLLW very infrequently.

c) LLWTs normally remain in continuous discharge mode and are only required to be pumped to HLLW very infrequently.

4. The laboratory drain sump pump provides the motive force to discharge the contents in the laboratory drain tank to the high level liquid waste tank.

5. The laboratory drain sump pumps (1-DB-P-4) discharge is directed to the high level liquid waste tank.

6. The lab drain pump will automatically start in AUTO with a high level in the lab drain tank and will automatically shut down when tank level is low, additionally the pump will trip on motor overload.

II. Contaminated drains tanks. [5031]

1. The two contaminated drains tanks 7A and 7B are located in the northwest corner of the Auxiliary Building, on the basement level. Each is a cylindrical, stainless steel tank, with a capacity of 1300 gallons. The operating capacity of each tank, between the high and low level alarm points, is 635 gallons. (83% and 8%)

   - Normal/TKA/TKB selector switch similar to the high level tanks

2. These tanks receive the potentially contaminated drain water from the station laundry, the PDA showers, and the cold laboratory, and auxiliary boiler blowdown. The water in these tanks is sampled and, if radioactivity is detected, the tanks are pumped to the high level waste drain tanks for processing through Duratek. The radioactivity levels are usually low enough to permit pumping the water directly to the clarifier.

3. The tanks are vented to the atmosphere. They are cross-connected near the top for overflow into the remaining tank if one is overfilled. If this cannot handle an overfill condition the tanks will then overflow via their individual

11. When in the "continuous discharge" mode of operation the LLLWT are sample on a weekly basis to determine if the tanks can stay in the continuous discharge mode.

    In the continuous discharge mode for the LLLWT the pump suction and discharge cross ties are open and the discharge line up and fill line up is set, the operator in the MCR can now start either pump to discharge a low level tank.

12. If a LLLWT tank is not in a continuous discharge mode then it must be removed from service prior to sampling and discharging. Tank fill lineup is secured to prevent any further addition of radioactive material while the tank is recirculated and sampled.

    To discharge the contents of a low level waste drain tank to the clarifier, the fill lineup is first swapped to the opposite tank. The tank to be discharged is then recirculated and sampled. After Health Physics approval is obtained, the low level drain tank pump discharge valve is opened, and the recirc. orifice bypass is closed to increase the flow rate to the clarifier. When the transfer is completed, the pump is stopped, and the valve lineup is returned to normal.

13. The LLLWT tank must be recirculated for two tank volumes prior to sampling, this ensures a representative sample of the contents of the tank.

14. If the activity sampled prior to release of a low level tank indicates a high micro curie content then the tank would be transferred to a high-level drain tank for reprocessing through the duratek system prior to release.

LL. <u>Low level drain tank pumps.</u> [5039, 5040, 5041, 5042]

GGG. Fluid Waste Treatment Tank [5087]

1. The fluid waste treating tank (1-DC-TK-2) serves as a collection tank for the potentially contaminated liquid waste generated during operations in the Decontamination Building.

2. The fluid waste treating tank has a capacity of 6,000 gallons and is constructed of stainless steel type 316.

3. Normally the fluid waste treating tank collects waste from the following areas and components:

   a. Decontamination building floor sumps and trenches (gravity drain)
   b. Ultrasonic cleaning tanks (gravity drain)
   c. Mechanically agitated cleaning tank (gravity drain)
   d. Decontamination building sump (pumped to the tank)

4. The fluid waste treatment tank overflows to the Decontamination Building trench. Normally, the tank is aligned to pump to the high level liquid waste tanks.

5. There is a high and low level alarm for the fluid waste treatment tank to alert the operators to an abnormal tank level, additionally there is a level indicator on the liquid waste panel in the MCR.

Operating and Abnormal Procedures

1. The Liquid Waste System is a waste disposal system designed to receive, process, and discharge potentially radioactive liquids from a variety of sources. The system design considers potential personnel exposure and ensures that radioactive releases to the environment are as low as

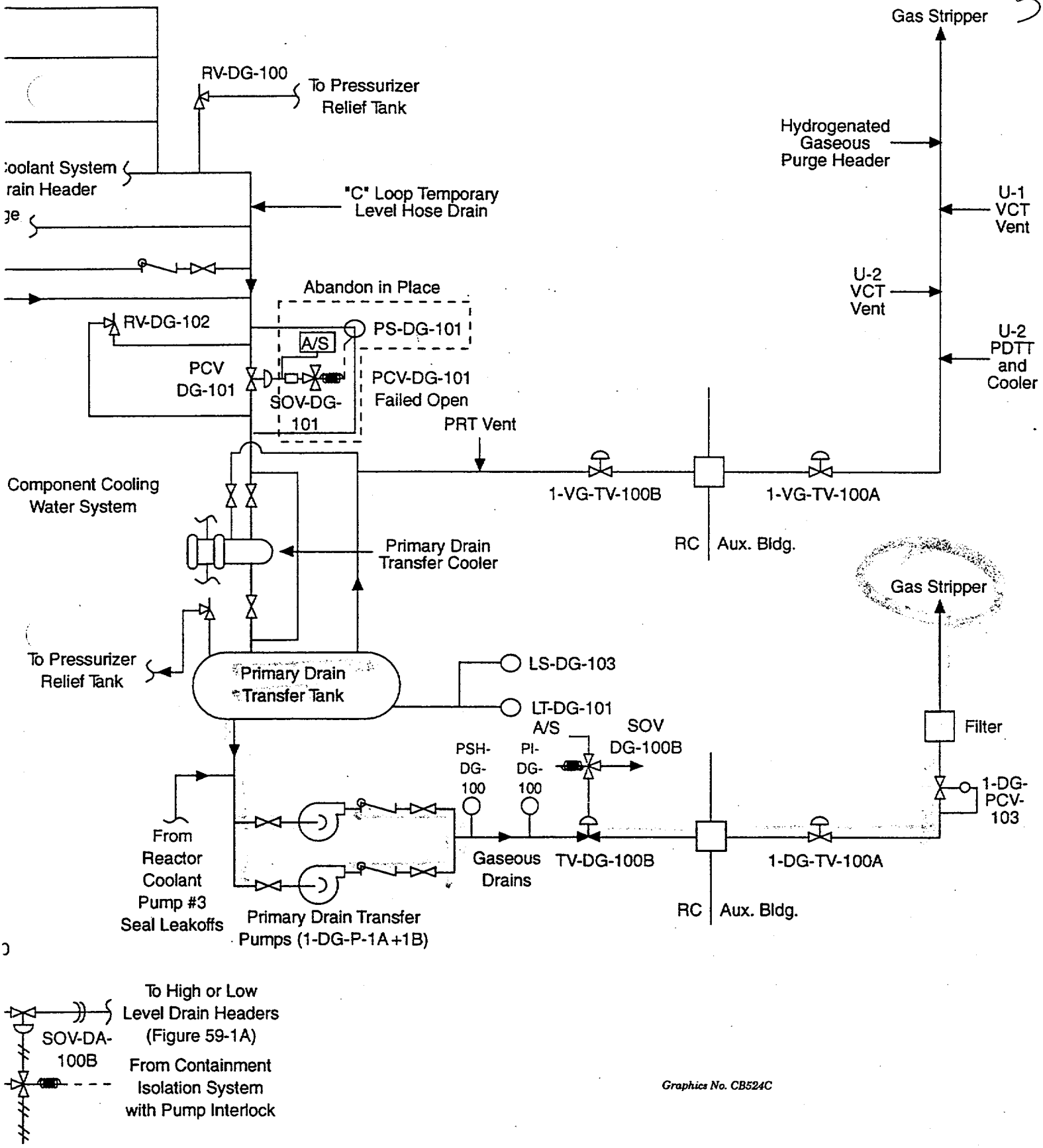

FIGURE 59-3-NA
PRIMARY VENTS AND DRAINS SYSTEM
PIPING DIAGRAM
(VA, DA, DG, AND VG SUBSYSTEMS)
10-24-97

52.
During performance of unit 1 core off-load, the following conditions exist:

- Fuel Building ventilation is in configuration "B"
- 1-RMS-RM-153, Fuel pit bridge hi and hi-hi alarms come in
- 1-RMS-RM-152, New fuel storage area hi and hi-hi alarms come in

Which ONE of the following response(s) is expected?

a) No automatic actions occur, but the crew should manually dump MCR bottled air and ensure MCR ventilation isolation.

b) No automatic actions occur, but the crew should place the Fuel Building exhaust through the Auxiliary Building iodine filters.

c) Following a 2-minute time delay, Fuel Building exhaust automatically swaps to discharge through the Auxiliary Building iodine filters.

d) Following a 2-minute time delay, MCR bottled air dumps, MCR supply and exhaust dampers close, and MCR emergency vent fans start.

K/A: SYS072.A3.01 10CFR: 41.7

Level: Knowledge

Origin: NEW Applicability: Both

References: NCRODP-46-LP-1 Objective 10705

Correct Answer: d)

Plausible Distractors:

a. If Fuel Building ventilation were in configuration "D" the automatic MCR bottled air dump would be disabled.

b. The crew would be required to align Fuel Building exhaust through the iodine filters for these conditions.

c. There is a 2-minute time delay, but it is associated with the MCR ventilation isolation; the Safeguards Building exhaust will automatically align to iodine filters following a CDA.

sensitivity to temp and humidity changes). Also very rugged compared to other detectors.

3. Detectors are shielded from background radiation normally by lead shields (normally called pigs)

G. Automatic actions. [10705]

1. New fuel storage area (RMS-152) and fuel pool bridge area (RMS-153)

   On a HI-HI alarm performs the following if the FUEL BUILDING RADIATION INTERLOCK KEY switch is in ENABLE:

   After a 2 minute time delay will automatically dump the MCR bottled air, Closes the MCR dampers, and starts the MCR emergency ventilation fans. (High alarm must be in after the 2 minutes for the action to take place)

2. Clarifier effluent (RM-LW-111)

   On Hi-Hi alarm performs the following:

   a. Shuts PCV-LW-115

   b. Closes clarifier influent valve, 1-LW-FCV-100

   c. This causes the S/G blowdown pumps to trip.

3. Condenser air ejector (RM-SV-121)

   a. Hi-Hi rad alarm - automatically diverts effluent from the vent stack to the containment atmosphere.

1. IF the abnormality of the Radiation Monitor was caused by an obvious malfunction, THEN do the following:

   N/A a) Inform the HP Shift Supervisor of the date and time the monitor was declared inoperable.

   b) Submit a Work Request.

   c) Perform applicable Actions of Tech Spec 3.3.3.1.

   d) Enter the inoperable monitor in the Action Statement Status Log.

   e) RETURN TO 0-AP-5.1, COMMON UNIT RADIATION MONITORING SYSTEM, Step in effect.

2. IF fuel handling activities OR heavy load movements are NOT in progress in the Fuel Building, THEN do the following:

   N/A a) Evacuate all personnel from the Fuel Building AND the 4th floor of the Auxiliary Building.

   b) Notify Health Physics to survey the affected area of the Fuel Building for gamma AND neutron radiation.

   c) Determine cause for increasing radiation:

      - IF Spent Fuel Pool level decreasing, THEN initiate 0-AP-27, MALFUNCTION OF SPENT FUEL PIT SYSTEM.

      - Movements of radioactive materials in the vicinity of the Radiation Monitors

3. IF fuel handling activities OR heavy load movements are in progress in the Fuel Building, THEN do the following:

   ___ a) Contact personnel handling Fuel or heavy Loads in the Fuel Building to determine the source of activity.

   ___ b) Verify the Fuel Building Radiation Automatic Interlock key switch is in ENABLE.

   ___ c) Place Fuel Building Exhaust fans through charcoal filters using Attachment 2.

   ___ d) Notify Health Physics to survey the affected area of the Fuel Building for gamma AND neutron radiation.

4. ___ IF the Fuel Building Radiation Automatic Interlock key switch is in ENABLE AND Hi-Hi and Hi Radiation signals are present, THEN verify the following actions have occurred following the 2-minute time delay. IF the actions have NOT occurred, THEN ensure the following component alignment:

   a) Do the following while observing the Control Room Bottled Air PIs (behind the Unit 1 Post Accident Monitoring Panel):

      1) IF pressure is NOT indicated on 1-HV-PI-1311, THEN place the following CONTROL RM BOTTLED AIR SYS PANEL control switches in OPEN:

      ___ • 1-HV-SOV-1300A - PANEL 1A, 1-EI-CB-156A
      ___ • 1-HV-SOV-1300B - PANEL 1B, 1-EI-CB-156B
      ___ • 1-HV-SOV-1300C - PANEL 2A, 2-EI-CB-156A
      ___ • 1-HV-SOV-1300D - PANEL 2B, 2-EI-CB-156B

      2) IF pressure is NOT indicated on 2-HV-PI-2311, THEN place the following CONTROL RM BOTTLED AIR SYS PANEL control switches in OPEN:

      ___ • 2-HV-SOV-2300A - PANEL 1A, 1-EI-CB-156A
      ___ • 2-HV-SOV-2300B - PANEL 1B, 1-EI-CB-156B
      ___ • 2-HV-SOV-2300C - PANEL 2A, 2-EI-CB-156A
      ___ • 2-HV-SOV-2300D - PANEL 2B, 2-EI-CB-156B

b) At Unit 1 Ventilation Panel:

__ 1) 1-HV-F-15, Control Room Exhaust Fan - STOPPED

__ 2) 1-HV-F-41, Control Room Emergency Ventilation Fan - RUNNING IN THE RECIRC MODE

__ 3) 1-HV-AOD-160-1 - CLOSED

__ 4) 1-HV-AOD-161-1 - CLOSED

c) At Unit 2 Ventilation Panel:

__ 1) 1-HV-AOD-160-2 - CLOSED

__ 2) 1-HV-AOD-161-2 - CLOSED

__ 3) 2-HV-F-41, Control Room Emergency Ventilation Fan - RUNNING IN THE RECIRC MODE

__ d) At the Unit 2 Auxiliary Shutdown Panel, 2-HV-F-42, Control Room Emergency Ventilation Fan - RUNNING IN THE RECIRC MODE.

__ e) At the Unit 1 Auxiliary Shutdown Panel, 1-HV-F-42, Control Room Emergency Ventilation Fan - RUNNING IN THE RECIRC MODE.

5. __ IF any Control Room Emergency Ventilation Fan is operating in the Pressurization mode (Turbine Building supply), THEN realign the fan to the recirc mode using 0-OP-21.7, MAIN CONTROL ROOM AND RELAY ROOM EMERGENCY VENTILATION OPERATION.

6. __ IF required, THEN initiate 0-AP-30, FUEL FAILURE DURING HANDLING.

7. __ IF required, THEN initiate 0-AP-27, MALFUNCTION OF SPENT FUEL PIT SYSTEM.

8. __ RETURN TO 0-AP-5.1, COMMON UNIT RADIATION MONITORING SYSTEM, Step in effect.

53.
With the unit stable at 345°F, which ONE of the following failures would initiate an "ICCM Trouble Train A" alarm?

a) "C" loop wide range pressure transmitter 1-RC-PT-1402 fails low.

b) "A" loop wide range pressure transmitter 1-RC-PT-1403 fails high.

c) "A" loop wide range Th fails as is.

d) "C" loop wide range Th fails high.

K/A: SYS017.K4.01 10CFR: 41.7

Level: Knowledge

Origin: NEW Applicability: Both

References: 1-AR-B-A1, 1-OP-5.6 Objective 7724

Correct Answer: a)

Plausible Distractors:

b. "A" loop wide-range pressure inputs to ICCM, but to train "B", not train "A."

c. "A" loop wide-range temperature inputs to train "A" ICCM; failing as is would not cause an alarm.

d. "C" loop wide-range temperature inputs to ICCM, but to train "B", not train "A."

ICCM SYSTEM
TROUBLE
TRAIN A

1.0 Probable Cause
- 1.1 Malfunction in the Train A ICCM-86 System Cabinet.
  - 1.1.1 Loss of power.
  - 1.1.2 Deadman error (processor halted).
  - 1.1.3 Hydraulic isolator alarm.
  - 1.1.4 System diagnostic error.
- 1.2 Any input is out of range, disabled, OR has a malfunction.
- 1.3 Testing in progress.

2.0 Operator Action

NOTE: This alarm is expected whenever RCS temperature is < 300°F since the RVLIS level transmitters may be out of range. A Work Request should not be submitted for this condition.

- 2.1 Refer to 1-OP-5.6, section 3 for diagnostic checks.
  - 2.1.1 If Required, THEN Submit WR for ICCM malfunction.
  - 2.1.2 Refer to T.S. 3.3.3.6.
- 2.2 IF Required, THEN Submit WR to repair (or disconnect) any input that is out of range, disabled, or malfunctioning.
- 2.3 IF test is in progress at the microprocessor or process racks, THEN verify normal indications and alarm cleared at the completion of testing.

3.0 References
- 3.1 ICCM-86 Design Specification (408A36).
- 3.2 Inadequate Core Cooling Monitor-86 Tech Manual.
- 3.3 11715-FE-10BAM.
- 3.4 DC-85-07-1, FC-55.
- 3.5 EWR 92-114
- 3.6 Memo from D. H. Smith to J. R. Hayes, dated 12-28-92, "RVLIS Indications Offscale High at Low Temperatures"

4.0 Actuation
- 4.1 ICCM Form C output relay (train A).

ATTACHMENT 1

(Page 1 of 2)

RVLIS INPUT AND OUTPUT DATA POINTS

Analog Inputs		
Description	**Train A**	**Train B**
Upper Range Level Transmitter	LT-1310 ("C" Loop)	LT-1320 ("A" Loop)
Full Range Level Transmitter	LT-1311 ("C" Loop)	LT-1321 ("A" Loop)
Dynamic Range Level Transmitter	LT-1312 ("C" Loop)	LT-1322 ("A" Loop)
Capillary RTD T1	TE-1313	TE-1323
Capillary RTD T2	TE-1314	TE-1324
Capillary RTD T3	TE-1315	TE-1325
Capillary RTD T4	TE-1316	N/A
Capillary RTD T5	TE-1317	TE-1327
Capillary RTD T6	TE-1318	TE-1328

Validyne Inputs		
RCS WR Pressure Transmitter	PT-1402 ("C" Loop)	PT-1403 ("A" Loop)
RCS WR Hot RTD	TE-1413 ("A" T_h)	TE-1433 ("C" T_h)

Calculated Inputs		
Upper Range Level	UR LEVEL	UR LEVEL
Full Range Level	FR LEVEL	FR LEVEL
Dynamic Head	D/P	D/P
Expected Upper Range	NORM UR	NORM UR
Expected Full Range	NORM FR	NORM FR
Expected Dynamic Head	NORM D/P	NORM D/P

54.
The following conditions exist with unit 2 at 100% power:

- The crew entered 1-AP-16 and is evaluating unit conditions using step 2 (RNO).
- Pressurizer level is 49% and decreasing.
- VCT level is 25% and decreasing with makeup in progress.
- Letdown flow is 0 gpm.
- Charging flow is at maximum with one charging pump running.
- Annunciators E-F8, Valve Pit Sump Hi/Hi-Hi Level, A-C1, Sfgds Area Sump Hi/Hi-Hi Level, and A-C4, Area Ambient Air Temp High are all illuminated.
- Containment and Auxiliary Building sump levels are normal.

Upon transition from E-0, REACTOR TRIP OR SAFETY INJECTION, which ONE of the following procedural flowpaths is the team expected to use to mitigate this event?

a) ES-0.1, REACTOR TRIP RESPONSE to OPs for cooldown.

b) E-1, LOSS OF REACTOR OR SECONDARY COOLANT to ECA-1.1, LOSS OF EMERGENCY COOLANT RECIRCULATION.

c) ECA-1.2, LOCA OUTSIDE CONTAINMENT, to E-1, LOSS OF REACTOR OR SECONDARY COOLANT.

d) E-1, LOSS OF REACTOR OR SECONDARY COOLANT, to ES-1.2, POST-LOCA COOLDOWN AND DEPRESSURIZATION.

K/A: SYS002.A2.01 10CFR: 41.5, 43.5

Level: Comprehension

Origin: NEW Applicability: Both

References: AP-16, E-0, ECA-1.2 Objective 11400

Correct Answer: c)

Plausible Distractors:

a. Previous problems with crews starting a second charging pump and maintaining RCS inventory without having to SI; not the desired philosophy.

b. Conditions not given for direct transition to E-1 and isolation of the leak outside CTMT not provided.

d. Correct for a LOCA inside containment, if conditions for direct transition given.

REACTOR COOLANT SYSTEM LEAKAGE

A. **1-AP-16, "Increasing Primary Plant Leakage"**

1. 1-AP-16 provides guidance for the operator during increasing primary plant leakage.

2. This procedure is applicable in modes 1, 2, and 3.
   For modes 4, 5 , and 6 (vessel head installed) go to 1-AP-17, "Shutdown LOCA."

3. Entry conditions are as follows:
   Increasing primary plant leakage as indicated by any of the following.
   a. Increasing charging flow or more frequent VCT makeups.
   b. Decreasing PRZR level due to leakage.
   c. Increasing PRT pressure, temperature, or level not due to normal operations.
   d. Increasing Containment pressure, temperature, or dewpoint not due to normal operations.
   e. Unexplained increase in RCP thermal barrier CC flow or temperature.
   f. Increasing Reactor Vessel Flange Leakoff temperature.
   g. More frequent PDTT pumping or containment sump pump operation.
   h. Increasing area radiation or radiation in systems interfacing with RCS.
   i. Leak rate PT results increasing.

B. High Level Action Steps

1. Verify that pressurizer level and Reactor Coolant System subcooling are under the control of the operator.

This step is performed to allow the operator to take anticipatory actions (i.e., isolate letdown, increase charging (not to include starting an additional charging pump), and enter 1-E-0 if needed). A loss of control over PRZR level and RCS subcooling indicates a larger leak than the normal control systems can respond to or that the control systems are not responding appropriately.

2. Place excess letdown in service if letdown is isolated, charging is minimized, and pressurizer level continues to increase.

   This step is performed because seal injection is greater than seal return and with letdown isolated the flow into the RCS is greater than the flow out of the RCS, therefore PRZR level will increase, to offset this increasing PRZR level the excess letdown system is placed in service and thereby preventing PRZR level from increasing out of the normal operating range and eventually increasing to the high PRZR level reactor trip setpoint.

3. Identify and isolate the source of leakage.

   This step is performed to systematically investigate potential sources of leakage. And when the leakage source is identified to isolate the leakage.

C. 1-AP-16, "Increasing Primary Plant Leakage" requires monitoring of valve leakoff temperatures. This is performed to determine if a packing in a primary valve is leaking. This will allow maintenance to determine which valve is leaking and allow the operators to take action (i.e., back seat the valve).

STEP	ACTION/EXPECTED RESPONSE	RESPONSE NOT OBTAINED

NOTE:
- If RHR is lost, then 1-AP-11, LOSS OF RHR, should be performed.
- If Refueling Cavity level decreases in an uncontrolled manner, then 1-AP-52, LOSS OF REFUELING CAVITY LEVEL DURING REFUELING, should be performed.

1.__ NOTIFY UNIT SUPERVISOR

* 2.__ VERIFY THE FOLLOWING PARAMETERS - UNDER CONTROL OF OPERATOR:

- PRZR level
- RCS subcooling based on Core Exit TCs
- VCT level

IF Unit is in Mode 4, 5, or 6 with the Reactor Head installed, THEN GO TO 1-AP-17, SHUTDOWN LOCA, STEP 1.

IF Unit is in Mode 1, 2, or 3 and PRZR level is decreasing, THEN do the following:

a) Isolate Letdown by closing the following valves:

1) Letdown Orifice Isolation Valves:

- 1-CH-HCV-1200A
- 1-CH-HCV-1200B
- 1-CH-HCV-1200C

2) Letdown Isolation Valves:

- 1-CH-LCV-1460A
- 1-CH-LCV-1460B

b) IF PRZR level cannot be maintained in AUTO level control, THEN place 1-CH-FCV-1122 controller in Manual and adjust Charging flow to control PRZR level.

c) Start a makeup to the VCT from the blender.

(STEP 2 CONTINUED ON NEXT PAGE)

STEP	ACTION/EXPECTED RESPONSE	RESPONSE NOT OBTAINED
* 2.	VERIFY THE FOLLOWING PARAMETERS - UNDER CONTROL OF OPERATOR (Continued):	
		IF PRZR level OR VCT level cannot be maintained with Letdown isolated and one Charging Pump at maximum charging flow, THEN do the following: a) IF PRZR level cannot be maintained, THEN GO TO 1-E-0, REACTOR TRIP OR SAFETY INJECTION, while continuing with this procedure. b) Shift Charging Pump Suction to RWST as follows: 1) Open Charging Pump suction from RWST MOVs: • 1-CH-MOV-1115B • 1-CH-MOV-1115D 2) Close Charging Pump suction from VCT MOVs: • 1-CH-MOV-1115C • 1-CH-MOV-1115E

CONTINUOUS ACTION PAGE FOR 1-E-0

1. ADVERSE CONTAINMENT CRITERIA
   IF either of the following conditions exist, THEN use setpoints in brackets:
   - 20 psia Containment pressure, OR
   - Containment radiation has reached or exceeded 10^5 R/hr (70% on High Range Recorder).

2. RCP TRIP CRITERIA
   IF both conditions listed below exist, THEN trip all RCPs:
   - Charging Pumps - AT LEAST ONE RUNNING AND FLOWING TO RCS, AND
   - RCS subcooling based on Core Exit TCs - LESS THAN 20°F [65°F].

3. CHARGING PUMP RECIRC PATH CRITERIA
   - IF RCS pressure decreases to less than 1275 psig [1475 psig] AND RCPs tripped, THEN close Charging Pump Recirc Valves.
   - IF RCS pressure increases to 2000 psig, THEN open Charging Pump Recirc Valves.

4. SI ACTUATION CRITERIA
   IF either condition listed below occurs, THEN manually initiate both trains of SI AND GO TO 1-E-0, REACTOR TRIP OR SAFETY INJECTION, STEP 1:
   - RCS subcooling based on Core Exit TCs - LESS THAN 25°F [75°F], OR
   - PRZR level - CANNOT BE MAINTAINED GREATER THAN 11% [40%].

5. ECST LEVEL CRITERIA
   WHEN the ECST level decreases to 40%, THEN initiate 1-AP-22.5, LOSS OF EMERGENCY CONDENSATE STORAGE TANK 1-CN-TK-1.

6. CDA ACTUATION CRITERIA
   IF Containment pressure exceeds 28 psia on 1-LM-PR-110B, THEN do the following:

   a) Manually actuate both trains of CDA.

   b) Ensure CC Pumps STOPPED.

   c) Stop all RCPs.

   d) Ensure QS Pumps RUNNING.

   e) Ensure QS Pump Discharge MOVs OPEN.

   f) Initiate Attachment 2.

STEP	ACTION/EXPECTED RESPONSE	RESPONSE NOT OBTAINED
27	CHECK FOR OUTSIDE CONTAINMENT INVENTORY LOSS: a) Safeguard Area Sump level annunciators - NOT LIT: • Annunciator Panel "E" F-8 • Annunciator Panel "A" C-1 b) Safeguards radiation (Vent Stack B) - NORMAL c) Auxiliary Building Sump level - NORMAL: • 1-DA-LI-111A • 1-DA-LI-111B d) Auxiliary Building radiation - NORMAL: • 1-RM-RM-154 • 1-VG-RM-103 • 1-VG-RM-104	Determine cause of abnormal conditions. IF cause is a loss of RCS inventory outside Containment, THEN GO TO 1-ECA-1.2, LOCA OUTSIDE CONTAINMENT, STEP 1.

VIRGINIA POWER
NORTH ANNA POWER STATION
EMERGENCY CONTINGENCY ACTION

54

NUMBER	PROCEDURE TITLE	REVISION
1-ECA-1.2	LOCA OUTSIDE CONTAINMENT (WITH NO ATTACHMENTS)	3 PAGE 1 of 3

PURPOSE

To provide instructions to identify and isolate a LOCA outside Containment.

LEVEL 3
CONTROLLED WORKING COPY

ENTRY CONDITIONS

This procedure is entered from:

- 1-E-0, REACTOR TRIP OR SAFETY INJECTION, or
- 1-E-1, LOSS OF REACTOR OR SECONDARY COOLANT.

RECOMMENDED APPROVAL:	DATE 9/20/96	EFFECTIVE DATE 9/26/96
APPROVAL:	DATE 9-20-96	

STEP	ACTION/EXPECTED RESPONSE	RESPONSE NOT OBTAINED
1.	__VERIFY PROPER VALVE ALIGNMENT:	
	a) Low-Head SI Pumps Hot Leg Injection Valves - CLOSED: • 1-SI-MOV-1890A • 1-SI-MOV-1890B	a) Manually close valves. IF valves cannot be closed, THEN locally close valves.
	b) SI Accumulator Sample Isolation Valves - CLOSED: • 1-SI-HCV-1850B • 1-SI-HCV-1850D • 1-SI-HCV-1850F • 1-SI-HCV-1850A • 1-SI-HCV-1850C • 1-SI-HCV-1850E	b) Manually close valves. IF valves cannot be closed, THEN close the following Containment Isolation Trip Valves: • 1-SI-TV-1842 • 1-SI-TV-1859

STEP	ACTION/EXPECTED RESPONSE	RESPONSE NOT OBTAINED
2	**ISOLATE COLD LEG INJECTION PIPING:**	
	a) Close the following valves: 1) Low-Head SI Pump Discharge Valves: • 1-SI-MOV-1864A • 1-SI-MOV-1864B 2) Low-Head SI Pump Cold Leg Injection Valves: • 1-SI-MOV-1890C • 1-SI-MOV-1890D	
	b) Check RCS pressure - INCREASING	b) Do the following: 1) Open the following valves: a. Low-Head SI Pump Discharge Valves: • 1-SI-MOV-1864A • 1-SI-MOV-1864B b. Low-Head SI Pump Cold Leg Injection Valves: • 1-SI-MOV-1890C • 1-SI-MOV-1890D 2) GO TO 1-ECA-1.1, LOSS OF EMERGENCY COOLANT RECIRCULATION, STEP 1.
	c) GO TO 1-E-1, LOSS OF REACTOR OR SECONDARY COOLANT, STEP 1	

- END -

55.
Which ONE of the following identifies the basis for securing the low head safety injection pumps if RCS pressure is greater than 225 psig following a safety injection?

a) Prevent pump overheating.

b) Reduce emergency diesel generator loading.

c) Prevent heating RWST water above Tech Spec limits.

d) Reduce discharge of RWST water to safeguards sump.

K/A: SYS006.K5.08 10CFR: 41.5

Level: Knowledge

Origin: NEW Applicability: Both

References: NCRODP-92-LP-2 Objective 12472

Correct Answer: a)

Plausible Distractors:

b) Emergency diesel generator loading has been a concern, and steps have been added to the EOPs to secure equipment for that reason.

c) Operation of LHSI pumps on recirc does tend to increase RWST temperature, but it is not a concern following a safety injection

d) Relief valves on the discharge of the LHSI pumps have a history of lifting after starting the pumps for periodic testing, but this is not the basis for shutdown of the pumps following a safety injection.

2. Evaluating the cause of any abnormal PRT conditions may assist in the determining the flow path of water from the RCS to the PRT.

   a. PZR PORV

   b. PZR safety valve

   c. Letdown relief valve

   d. Seal return relief valve

   e. Excess letdown relief valve

   f. RHR relief valve

AB. Check if low-head safety injection pumps should be stopped

1. For certain LOCAs RCS pressure will stabilize at some pressure above LHSI or even accumulator pressure. The LHSI pumps should be stopped at RCS pressures above their shutoff head to prevent potential damage due to heat up while running on recirc. The stronger pump will tend to reduce the recirc flowrate of the weaker pump, which could eventually be damaged due to insufficient recirc flow.

2. If RCS pressure decreases to <225 psig restart LHSI pumps to provide adequate core cooling. If conditions subsequently degrade the LHSI pumps will not auto start since SI is blocked.

AC. If at the end of E-0, a transition to an appropriate recovery procedure has not been identified then remain in E-0 until either a transition is made or SI can be terminated. Return to the point in E-0 after verification of automatic actions is

56.
Unit 1 is at 100% power with the following conditions:

- PZR pressure protection channel I failed low on the previous shift and was placed in trip.
- PZR pressure protection channel II, fails high.

Which ONE of the following describes the plant response to these conditions?

a) High pressure reactor trip.

b) PZR PORV 1-RC-PCV-1456 opens.

c) Channel II OTDT activates.

d) PZR PORV automatic opening is blocked.

K/A: SYS010.K6.01 10CFR: 41.7

Level: Knowledge

Origin: NEW Applicability: Both

References: NA-DW-108D014, 5655D33, NCRODP-74-LP-1 Objective 8836

Correct Answer: a)

Plausible Distractors:

b. Comes from the pressure control channel not pressure protection.

c. Correct if channel had failed low.

d. PZR PORV automatic opening is blocked below 2000 psig; this would occur if channel II were placed in trip after failing high.

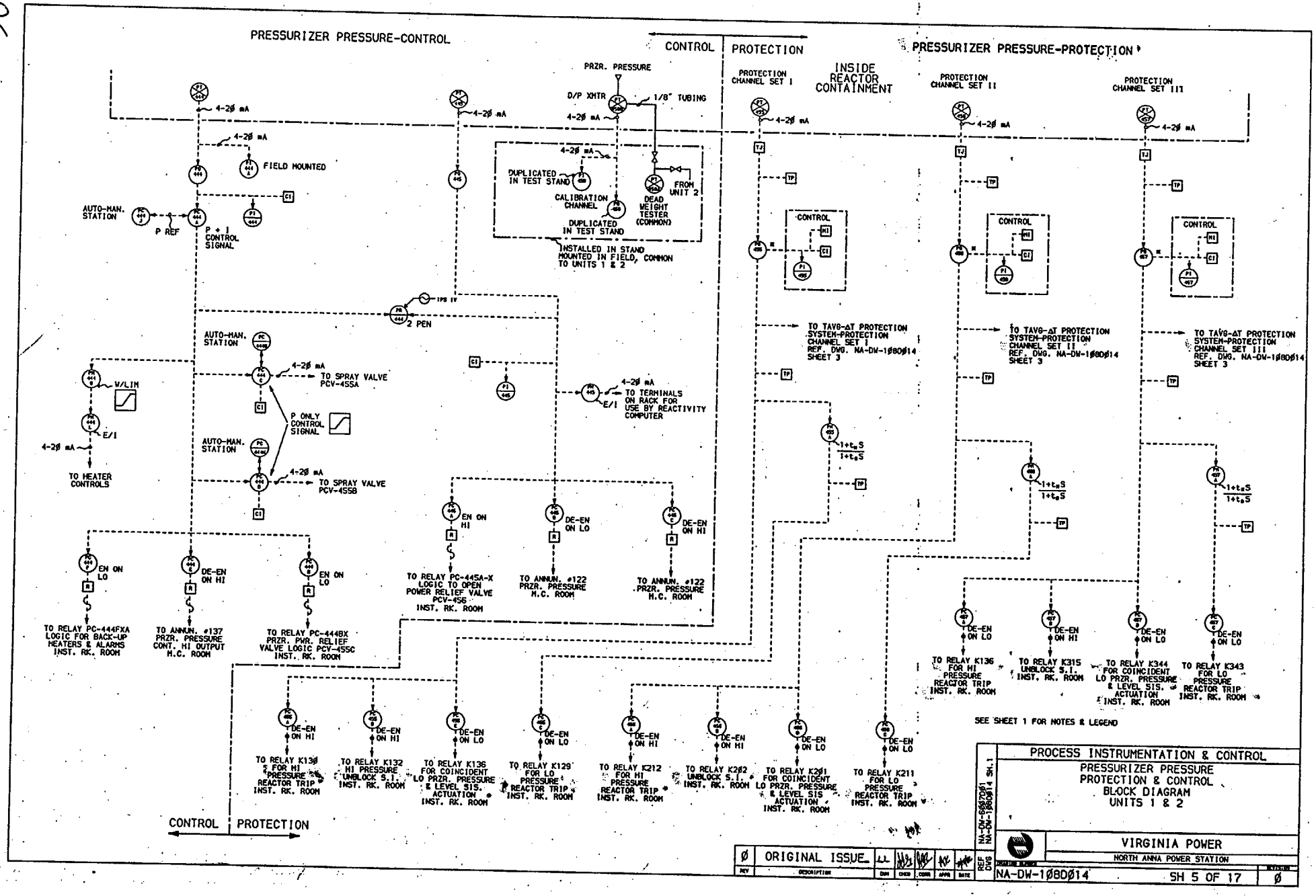
PRESSURIZER PRESSURE-CONTROL
CONTROL
PROTECTION
PRESSURIZER PRESSURE-PROTECTION
INSIDE REACTOR CONTAINMENT
PROTECTION CHANNEL SET I
PROTECTION CHANNEL SET II
PROTECTION CHANNEL SET III
PRZR. PRESSURE
D/P XMTR
1/8" TUBING
4-20 mA
FIELD MOUNTED
AUTO-MAN. STATION
P REF
P + I CONTROL SIGNAL
DUPLICATED IN TEST STAND
CALIBRATION CHANNEL
DEAD WEIGHT TESTER (COMMON)
FROM UNIT 2
INSTALLED IN STAND MOUNTED IN FIELD, COMMON TO UNITS 1 & 2
2 PEN
W/LIN
E/I
TO HEATER CONTROLS
TO SPRAY VALVE PCV-455A
P ONLY CONTROL SIGNAL
TO SPRAY VALVE PCV-455B
TO TERMINALS ON RACK FOR USE BY REACTIVITY COMPUTER
CONTROL
TO TAVG-ΔT PROTECTION SYSTEM-PROTECTION CHANNEL SET I REF. DWG. NA-DW-1080014 SHEET 3
TO TAVG-ΔT PROTECTION SYSTEM-PROTECTION CHANNEL SET II REF. DWG. NA-DW-1080014 SHEET 3
TO TAVG-ΔT PROTECTION SYSTEM-PROTECTION CHANNEL SET III REF. DWG. NA-DW-1080014 SHEET 3
EN ON LO
DE-EN ON HI
EN ON HI
DE-EN ON LO
TO RELAY PC-444FXA LOGIC FOR BACK-UP HEATERS & ALARMS INST. RK. ROOM
TO ANNUN. #137 PRZR. PRESSURE CONT. HI OUTPUT H.C. ROOM
TO RELAY PC-444BX PRZR. PWR. RELIEF VALVE LOGIC PCV-455C INST. RK. ROOM
TO RELAY PC-445A-X LOGIC TO OPEN POWER RELIEF VALVE PCV-456 INST. RK. ROOM
TO ANNUN. #122 PRZR. PRESSURE H.C. ROOM
TO ANNUN. #122 PRZR. PRESSURE H.C. ROOM
TO RELAY K136 FOR HI PRESSURE REACTOR TRIP INST. RK. ROOM
TO RELAY K315 UNBLOCK S.I. INST. RK. ROOM
TO RELAY K344 FOR COINCIDENT LO PRZR. PRESSURE & LEVEL SIS. ACTUATION INST. RK. ROOM
TO RELAY K343 FOR LO PRESSURE REACTOR TRIP INST. RK. ROOM
TO RELAY K130 FOR HI PRESSURE REACTOR TRIP INST. RK. ROOM
TO RELAY K132 HI PRESSURE UNBLOCK S.I. INST. RK. ROOM
TO RELAY K136 FOR COINCIDENT LO PRZR. PRESSURE & LEVEL SIS. ACTUATION INST. RK. ROOM
TO RELAY K129 FOR LO PRESSURE REACTOR TRIP INST. RK. ROOM
TO RELAY K212 FOR HI PRESSURE REACTOR TRIP INST. RK. ROOM
TO RELAY K262 UNBLOCK S.I. INST. RK. ROOM
TO RELAY K261 FOR COINCIDENT LO PRZR. PRESSURE & LEVEL SIS ACTUATION INST. RK. ROOM
TO RELAY K211 FOR LO PRESSURE REACTOR TRIP INST. RK. ROOM
SEE SHEET 1 FOR NOTES & LEGEND
CONTROL
PROTECTION
Ø
ORIGINAL ISSUE
REV
DESCRIPTION
DWN
CHKD
CORR
APPR
DATE
REF DWG
NA-DW-6067061
NA-DW-1080014 SH. 1
PROCESS INSTRUMENTATION & CONTROL
PRESSURIZER PRESSURE PROTECTION & CONTROL BLOCK DIAGRAM UNITS 1 & 2
VIRGINIA POWER
NORTH ANNA POWER STATION
DRAWING NUMBER
NA-DW-1080014
SH 5 OF 17
REVISION
Ø

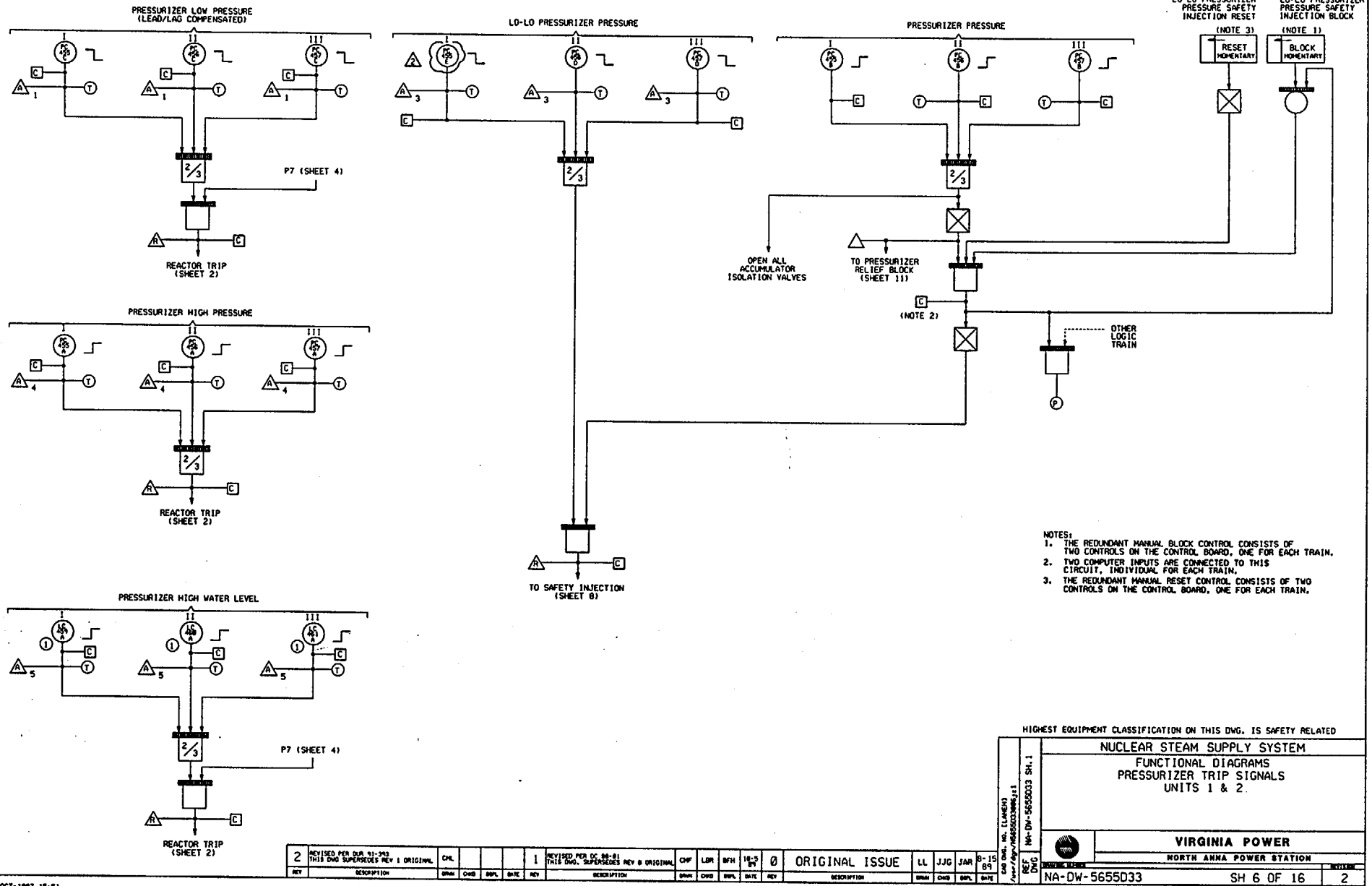

NOTES:
1. THE REDUNDANT MANUAL BLOCK CONTROL CONSISTS OF TWO CONTROLS ON THE CONTROL BOARD, ONE FOR EACH TRAIN.
2. TWO COMPUTER INPUTS ARE CONNECTED TO THIS CIRCUIT, INDIVIDUAL FOR EACH TRAIN.
3. THE REDUNDANT MANUAL RESET CONTROL CONSISTS OF TWO CONTROLS ON THE CONTROL BOARD, ONE FOR EACH TRAIN.

REV	DESCRIPTION	DRAWN	CHKD	DSPL	DATE
2	REVISED PER DCR 91-343 THIS DWG SUPERSEDES REV 1 ORIGINAL	CHL			
1	REVISED PER DC 88-81 THIS DWG. SUPERSEDES REV 0 ORIGINAL	CHF	LDR	BFH	10-5 89
0	ORIGINAL ISSUE	LL	JJG	JAR	8-15 89

CAD DWG. NO. (LANDM) /user/dgn/NA5655033SH6;1

REF DWG NA-DW-5655033 SH. 1

HIGHEST EQUIPMENT CLASSIFICATION ON THIS DWG. IS SAFETY RELATED

NUCLEAR STEAM SUPPLY SYSTEM
FUNCTIONAL DIAGRAMS
PRESSURIZER TRIP SIGNALS
UNITS 1 & 2

VIRGINIA POWER
NORTH ANNA POWER STATION

DRAWING NUMBER: NA-DW-5655033 SH 6 OF 16 REVISION 2

PC-HD1

PRIOR TO USING FOR DESIGN WORK CHECK DMIS FOR WORK PENDING

7-OCT-1997 15:51

E. Pressurizer Protection System

The protection system receives inputs from the three protection channels (PT-455, 456, and 457) provides protection to the RCS for DNB and over pressurization conditions.

1. The following are protection logic for the pressurizer:

   a. Pressurizer High Pressure Trip

      (1) 2360 PSIG (2/3 channels)

   b. Pressurizer Low Pressure Trip

      (1) 1870 PSIG and P-7 (2/3 channels) (rate sensitive)

   c. Pressurizer Low-Low Pressure Safety Injection

      (1) 1780 PSIG and not blocked (2/3 channels)

   d. P-11 - < 2000 PSIG on 2/3 channels

      (1) Blocks PORVs from opening in Automatic (Does NOT affect PORVs in NDT mode.)

      (2) Allows manual blocking of the Pressurizer Low-Low Pressure Safety Injection.

      (3) Allows closing of accumulator discharge MOVs.

   e. Pressure input to the OTΔT Setpoints.

57.
Which ONE of the following identifies a potential cause of a reduction in pressurizer heater capability?

a) Loss of MCC 1J1-1.

b) SI/CDA load shed actuation.

c) 1-CH-LCV-1460A **OR** 1460B, letdown isolation, closed.

d) PZR level protection channel I, fails low with PZR Level Channel Defeat switch in the 459/460 position.

K/A: SYS011.A2.05 10CFR: 41.5, 43.5

Level: Comprehension

Origin: NEW Applicability: Both

References: NCRODP-74-LP-2, NA-DW-108D014 Objective 10656

Correct Answer: d)

Plausible Distractors:

a. Group 1 heaters' power supply is bus 1J1, but directly from the bus, not from an MCC.

b. Load shed strips many loads, pressurizer heaters is not one of them.

c. 1-CH-LCV-1460A/B auto close from low PZR level, which also causes heaters to trip off; valve position alone does not correlate to reduced heater capacity.

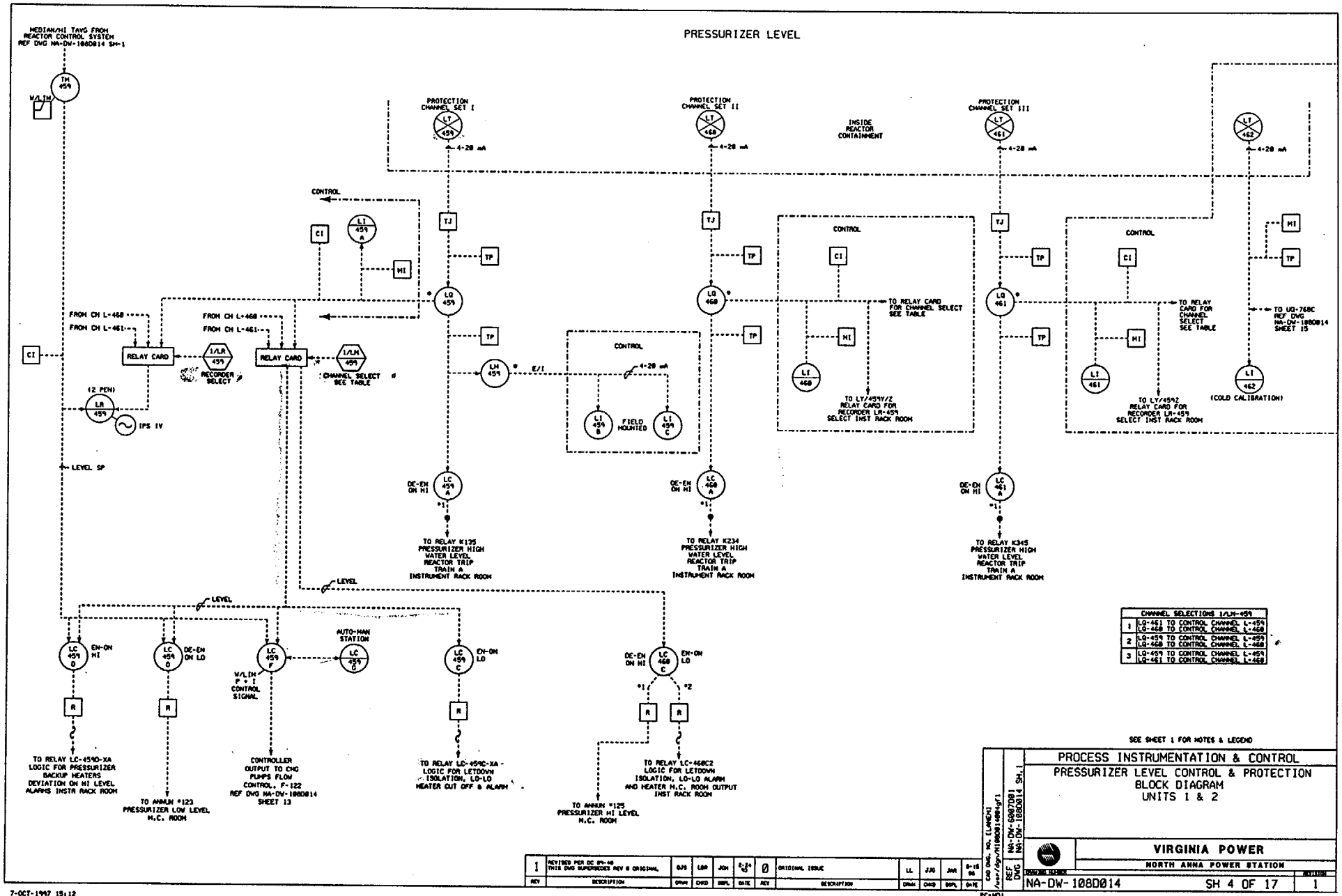
PRESSURIZER LEVEL
MEDIAN/HI TAVG FROM REACTOR CONTROL SYSTEM REF DWG NA-DW-108D014 SH-1
TM 459
W/LIM
PROTECTION CHANNEL SET I
LT 459
PROTECTION CHANNEL SET II
LT 460
PROTECTION CHANNEL SET III
LT 461
LT 462
4-20 mA
INSIDE REACTOR CONTAINMENT
CONTROL
CI
LI 459 A
HI
TJ
TP
LQ 459
LQ 460
LQ 461
FROM CH L-460
FROM CH L-461
RELAY CARD
1/LR 459
RECORDER SELECT
1/LM 459
CHANNEL SELECT SEE TABLE
LM 459
E/I
(2 PEN)
LR 459
IPS IV
LEVEL SP
TO RELAY CARD FOR CHANNEL SELECT SEE TABLE
LI 460
TO LY/459Y/Z RELAY CARD FOR RECORDER LR-459 SELECT INST RACK ROOM
LI 461
TO LY/459Z RELAY CARD FOR RECORDER LR-459 SELECT INST RACK ROOM
TO UQ-768C REF DWG NA-DW-108D014 SHEET 15
LI 462
(COLD CALIBRATION)
LI 459 B
FIELD MOUNTED
LI 459 C
LC 459 A
LC 460 A
LC 461 A
DE-EN ON HI
*1
TO RELAY K135 PRESSURIZER HIGH WATER LEVEL REACTOR TRIP TRAIN A INSTRUMENT RACK ROOM
TO RELAY K234 PRESSURIZER HIGH WATER LEVEL REACTOR TRIP TRAIN A INSTRUMENT RACK ROOM
TO RELAY K345 PRESSURIZER HIGH WATER LEVEL REACTOR TRIP TRAIN A INSTRUMENT RACK ROOM
LEVEL
LC 459 D
EN-ON HI
LC 459 D
DE-EN ON LO
LC 459 F
W/LIM F + I CONTROL SIGNAL
AUTO-MAN STATION
LC 459 G
LC 459 C
EN-ON LO
LC 460 C
DE-EN ON HI
EN-ON LO
*2
R
TO RELAY LC-459D-XA LOGIC FOR PRESSURIZER BACKUP HEATERS DEVIATION ON HI LEVEL ALARMS INSTR RACK ROOM
TO ANNUN *123 PRESSURIZER LOW LEVEL M.C. ROOM
CONTROLLER OUTPUT TO CHG PUMPS FLOW CONTROL, F-122 REF DWG NA-DW-108D014 SHEET 13
TO RELAY LC-459C-XA - LOGIC FOR LETDOWN ISOLATION, LO-LO HEATER CUT OFF & ALARM
TO ANNUN *125 PRESSURIZER HI LEVEL M.C. ROOM
TO RELAY LC-460C2 LOGIC FOR LETDOWN ISOLATION, LO-LO ALARM AND HEATER M.C. ROOM OUTPUT INST RACK ROOM
CHANNEL SELECTIONS 1/LM-459
1 LQ-461 TO CONTROL CHANNEL L-459
LQ-460 TO CONTROL CHANNEL L-460
2 LQ-459 TO CONTROL CHANNEL L-459
LQ-460 TO CONTROL CHANNEL L-460
3 LQ-459 TO CONTROL CHANNEL L-459
LQ-461 TO CONTROL CHANNEL L-460
SEE SHEET 1 FOR NOTES & LEGEND
PROCESS INSTRUMENTATION & CONTROL
PRESSURIZER LEVEL CONTROL & PROTECTION
BLOCK DIAGRAM
UNITS 1 & 2
VIRGINIA POWER
NORTH ANNA POWER STATION
DRAWING NUMBER
NA-DW-108D014
SH 4 OF 17
REVISION
1
REF DWG NA-DW-608T081 NA-DW-108D014 SH. 1
CAD DWG. NO. (LINECH)
/user/dgn/N108D014dgn1
1 REVISED PER DC 89-48 THIS DWG SUPERSEDES REV 0 ORIGINAL GJS LBR JOH 0-28-93
0 ORIGINAL ISSUE LL JJG JAH 8-15-88
REV DESCRIPTION DRWN CHKD DSPL DATE
PC-HO1
7-OCT-1997 15:12
PRIOR TO USING FOR DESIGN WORK CHECK DMIS FOR WORK PENDING

D. Pressurizer Level Control

1. Normally pressurizer level is automatically maintained on "program"

a. Median Select/Hi Tavg in the level control system generates the program level. The program 28.4% at 547°F and 64.5% at 580.8°F. In between these two points the program level will be linear.

(1) PZR program level is supplied to Pen 1 of Level recorder LR-1459 (LR-2459).

(2) Below a T_{avg} = 547°F, the programmed setpoint remains at 28.4%, if T_{avg} exceeds 580.8°F, the programmed setpoint remains at 64.5%. Assuming an initial power of 50%, if median-select T_{avg} were to fail high (low), then charging flow would automatically increase (decrease), until pressurizer level was at the high (low) program level, then charging flow would return to the previous value, and level would stabilize there.[10654]

2. Within the level control system, the output from the three level channels are routed through the PRESSURIZER LEVEL CHANNEL DEFEAT HANDSWITCH, located on benchboard 1-1. The defeat switch controls the transmitter outputs to LC-459 and 460 as follows:

SWITCH POSITION	(1)	(2)	(3)
CH. FEEDING LC-459	461	459	459
CH. FEEDING LC-460	460	460	461

NOTE: LT 459 can only input to LC 459
LT 460 can only input to LC 460

LT 461 can be selected for either LC 459 or LC 460

3. Outputs from LC-459

   a. Input to the backup pressurizer heaters logic (turns on heaters at 5% above program level)

      (1) Annunciator B-G6, PZR HIGH LEVEL - BU HTRS ON

   b. PZR LOW LEVEL annunciator, B-F8 (5% below program)

   c. Input to the charging flow control valve FCV-1122 control circuit,

   d. Input to the CVCS letdown isolation valve logic circuit (closes 1460A and HCV-1200A, B, and C at 15% pzr level)

      (1) Annunciator B-G7, PZR LO LEV HTRS OFF - LETDWN ISOL

   e. Input to the pressurizer heater cutoff circuit at 15% pzr level

4. Outputs from LC-460

   a. Input to the CVCS letdown isolation valve logic circuit (closes 1460B and HCV-1200A, B, and C at 15% pzr level)

      (1) Annunciator B-G7, PZR LO LEV HTRS OFF - LETDWN ISOL

   b. Input to the pressurizer heater cutoff circuit at 15% pzr level

   c. Annunciator B-G8, PRZ HI LEVEL (69.5%)

MINIMUM CHARGING FLOW is limited to prevent flashing downstream of letdown orifices. Approach to either point gives an alarm. (Hi flow 125 GPM, lo flow 25 GPM)

Use the following example with class:
Power is raised from 50% to 60%.
The output from LC 459F indicates the level is lower than setpoint- i.e., flow signal from level output is asking for more flow. When the flow signal from LC 459F is compared to the flow signal from FQ 112A the result is a flow error. Output from FC 1122A to FCV 1122 results in FCV 1122 opening giving more charging flow. Even though the level error may be still present the flow error between LC 459F and FQ 1122 is gone. Therefore, FCV 1122 does not continue to open to restore pressurizer level. (Without the flow feedback the P + I level controller would cause FCV 1122 to continue to open until the pressurizer level was restored. Most likely Prz level would over shoot the setpoint and then eventually level out).

(a) FC-1122 also has an auto/manual Control Station (LC-1459). In addition, it also has a manual half station and transfer switch for controlling charging at the auxiliary shutdown panel.

8. Letdown isolation and Lo-Lo heater cutoff will occur when either LC-1459C or LC-1460C sense the level decreasing to 15%. This also results in "PRESSURIZER LOW LEVEL HEATERS OFF-LETDOWN ISOLATION" (1B-G7)

9. A high Level alarm will be generated by LC-1460 at 69.5% level. The Annunciator will read "PRESSURIZER HIGH LEVEL."

BUS/MCC MARK NO.: 1-EP -480 -1J1 DESCRIPTION: 1-EE-SS-4

LOCATION: ROD DRIVE ROOM UNIT 1 REFERENCE: 11715-FE-1AF

POWER SUPPLY: 1-EP-4160-1J 15J8

BREAKER NO.	MARK NUMBER	DESCRIPTION
14J1-1	- - -	BUS FEEDER FROM 15J8
14J1-2	1-RS -P -1B	INSIDE RECIRC SPRAY PUMP
14J1-3		FUTURE
14J1-4	1-QS -P -1B	QUENCH SPRAY PUMP
14J1-5	1-HV -F -1B	CONTAINMENT AIR RECIRC FAN
14J1-6	1-EP -CB -10A	PZR HEATER B/U PNL #1
14J1-7		FUTURE

58.
The following conditions exist on unit 1:

- Stable at 30% power.
- P-250 plant computer has failed and attempts to bootstrap were unsuccessful.
- Applicable steps of 1-AP-42 were performed and the unit 1 PCS is aligned for augmented surveillance.

Which ONE of the following will generate a "CMPTR ALARM PR TILT ROD DEV/SEQ" annunciator?

a) QPTR exceeds 1.02.

b) QPTR exceeds 1.09.

c) "C" bank step counters indicate 129 and "D" bank step counters indicate 1.

d) "D" bank rod F-10 IRPI indicates 130 steps with "D" bank step counters at 155 steps.

K/A: SYS014.K3.02 10CFR: 41.7

Level: Comprehension

Origin: NEW Applicability: Both

References: 1-AR-A-D4 Objective 12007

Correct Answer: d)

Plausible Distractors:

a. QPTR inputs to this annunciator and the Tech Spec limit is 1.02; however, the QPTR portion of the alarm is disabled when the PCS is selected.

b. QPTR inputs to this annunciator and Tech Specs allows the normal limit of 1.02 to be exceeded (up to 1.09) during dropped rod recovery; however, the QPTR portion of the alarm is disabled when the PCS is selected.

c. Improper bank overlap sequence will cause the alarm; the condition stated represents proper bank overlap.

CMPTR ALARM
PR TILT
ROD DEV/SEQ

NOTE: The input to this annunciator is dependent upon which computer system has been selected on the Unit 1 PCS. WHEN this annunciator is selected to the Unit 1 PCS, THEN the Power Tilt portion of this annunciator is defeated.

1.0 Probable Cause

1.1 QPTR Problems

1.2 Dropped Rod or individual rodlet

1.3 Rod position error signal or indication fault as indicated by any of the following alarms:

NOTE: This annunciator has multiple reflash capabilities.

a. Movement of any Control Bank with the Shutdown Banks less than fully withdrawn.

b. Any improper control rod overlap sequence or control rod bank positions NOT 128 steps apart for partially withdrawn banks.

c. Any Rod Position indicating >10 steps deviation from group.

d. Any Rod Position indicating >12 steps deviation from group.

e. Any Rod Position indicating >24 steps deviation from group, below 50% Power.

f. >12 steps deviation for ≥30 minutes total accumulated time in the previous 24 hour period, below 50% Power.

g. >12 steps deviation for ≥60 minutes total accumulated time in the previous 24 hour period, below 50% Power.

NOTE: The Unit 1 P-250 and Unit 1 PCS upper bank position limit value can cause the Unit 1 P-250 and Unit 1 PCS to sense that Control Rod banks are NOT 128 steps apart when a bank is overstepped past the fully withdrawn position. When the Bank is driven IN to correct the overstep, the Unit 1 P-250 and Unit 1 PCS sense the inward step and generate an alarm condition because of the perception of a Bank overlap error.

h. Overstepping the Control or Shutdown Banks past the fully withdrawn position, then subsequently stepping the Bank IN to correct.

1.4 Rod Position Indication System in TEST.

1.5 IRPI drift caused by changes in Containment temperature or ventilation.

1.6 IRPI drift caused by changes in Reactor Coolant System Temperature.

2.0 Operator Action

2.1 IF IRPI drift as described in steps 1.5 or 1.6 is NOT the cause of the Annunciator, THEN place Control Rod Mode Selector Switch in MANUAL.

2.2 Determine if rod(s) misposition is causing the alarm by monitoring the following:

- IRPIs
- Unit 1 P-250 printouts
- Unit 1 PCS alarm messages
- Power Range NIs
- Tavg
- Delta Flux indicators

2.3 IF a shutdown is required AND a Flux Map is NOT performed to determine actual rod position, THEN declare the Rod INOPERABLE AND increase the Shutdown Margin by an amount at least equal to the withdrawn Rod Worth of the rod. (Tech Spec 3.1.1.1)

2.4 IF alarm is caused by a mispositioned rod, THEN GO TO the applicable procedure:
- 1-AP-1.2, Dropped Rod
- 1-AP-1.3, Control Rod Out of Alignment

2.5 IF alarm is caused by erroneous IRPI indication, THEN do the following:
a. IF in Mode 2 AND increasing power, THEN stop power increase.
b. Refer to Tech Spec 3.1.3.2 or 3.1.3.3.
c. Submit WR to have Instrument Department adjust the IRPI as required.

2.6 IF alarm is caused by overstepping the Control or Shutdown Banks, THEN do the following:
a. Return the Bank to normal position.
b. Update the Unit 1 P-250 demand position for the Bank using 1-AP-42, Loss of Prodac-250 Computer.
c. Update the Unit 1 PCS demand position for the Bank using the Rod Bank Update Screen.

NOTE: This annunciator will not alarm on power tilt when selected to the Unit 1 PCS.

NOTE: This is NOT the QPTR Tech Spec Monitor, see Windows A-C7 and A-C8.

2.7 IF alarm is caused by abnormal power tilt AND it is desired to determine QPTR, THEN perform 1-PT-23, Quadrant Power Tilt Ratio Determination.

2.8 IF all indications are normal, THEN declare the affected Computer Rod Monitoring Program inoperable AND apply Tech Spec 3.1.3.2.

2.9 WHEN the abnormal condition(s) have been corrected, THEN do the following:
a. Ensure the Rod Control Mode Selector Switch is returned to AUTO.
b. Verify that the Unit 1 P-250 prints ROD DEVIATION RETURN message and the Unit 1 PCS displays message ROD MONITORING RETURNED TO NORMAL.
c. IF the Unit 1 P-250 does NOT print the ROD DEVIATION RETURN message AND the Unit 1 PCS does NOT display message ROD MONITORING RETURNED TO NORMAL, THEN verify operability of both control rod position monitoring programs by performing 1-PT-20.5, Unit 1 P-250 Rod Deviation Monitor Functional Test, and 1-PT-20.3, Unit 1 PCS Rod Deviation Monitor Functional Test.

3.0 References
3.1 11715-ESK-10A, 10AAK
3.2 Westinghouse Tech manual P250 computer 52N series
3.3 Westinghouse drawing 4753A03
3.4 1-OP-57.1, Incore Movable Detector System
3.5 1-AP-1.3, Control Rod Out Of Alignment
3.6 1-AP-1.2, Dropped Rod
3.7 Tech Spec 3.1.1.1
3.8 Tech Spec 3.1.3.1, 4.1.3.1.1
3.9 Tech Spec 3.1.3.2
3.10 Tech Spec 3.1.3.3
3.11 Tech Spec 3.2.4, 4.2.4.1.b
3.12 CTS 02-95-2127-003, TS Review
3.13 DCP 96-005, P-250 Upgrade
3.14 1-PT-20.5, Unit 1 P-250 Rod Deviation Monitor Functional Test
3.15 1-PT-20.3, Unit 1 PCS Rod Deviation Monitor Functional Test
3.16 1-AP-42, Loss of Prodac-250 Computer

4.0 Actuation
4.1 Computer cab, 0-03 strip 8 (computer rod supervisor program)
4.2 QPTR P-250 Points
a) Upper Radial Flux Tilts (U1261 - U1264)
b) Lower Radial Flux Tilts (U1265 - U1268)
c) Radial Flux Tilts (U1155 - U1158)

59.
Unit 1 is at 100% power when annunciator B-E1, Rx Ves Flge Leakoff Hi Temp, actuates. Which ONE of the following indications would you use to confirm that reactor vessel flange leakage has increased?

a) Increasing PRT level.

b) Increasing containment sump level.

c) Increasing PDTT pumping rate.

d) Decreasing full range indication on RVLIS.

K/A: SYS016.K3.01 10CFR: 41.7/45.6

LEVEL: Knowledge.

Origin: NEW Applicability: BOTH

References: 1-AR-B-E1 Objective 3630

Correct Answer: c)

Plausible distractors:

a) Many items in CTMT relieve or divert to the PRT, this is not one of them.

b) Containment sump is a sink for many leakages. Head leakoff goes to the PDTT.

d) While the RVLIS system taps off the Rx head, it will not indicate the small amount of leakage past the vessel head seals.

RX VES FLGE LEAKOFF HI TEMP

Ambient + 20°F
Refer to Unit 1
Reactor Data Book
for Setpoints

1.0 Probable Cause
- 1.1 Leak in reactor head seal ring
- 1.2 Relief valve leaking or lifting sending steam and/or hot water to PDTT.
- 1.3 High valve packing leakoff flow to PDTT

2.0 Operator Action
- 2.1 Verify Hi Temp on 1-RC-TI-1401 and monitor level in the PDTT for excessive leakage.
- 2.2 Check valve leakoff temperatures in containment for possible source of high temperature.
- 2.3 IF valve leakoff temperatures are normal, THEN align Outer Head seal leakoff as follows:
  - 2.3.1 Close 1-RC-33, Reactor Vessel Flg Inner Seal Isolation Valve.
  - 2.3.2 Open 1-RC-32, Reactor Vessel Flg Outer Seal isolation Valve.
- 2.4 IF the High Temp alarm did not clear, THEN close 1-RC-HCV-1544, Reactor Vessel Flange Leakoff Hand Control Valve. IF the high temperature alarm now clears, THEN refer to 1-AP-16, Increasing Primary Plant Leakage.
- 2.5 IF RCS leakage is suspected, THEN refer to Tech Spec 3.4.6.2 and if desired, perform 1-PT-52.2 or 1-PT-52.2A, Reactor Coolant System Leakrate

3.0 References
- 3.1 11715-ESK-10B
- 3.2 11715-ESK-10AAH
- 3.3 Unit 1 Loop Book, page RC-60
- 3.4 11715-FM-93A
- 3.5 Unit 1 Reactor Data Book
- 3.6 Tech Spec 3.4.6.2
- 3.7 1-PT-52.2, 1-PT-52.2A, Reactor Coolant System Leakrate

4.0 Actuation
- 4.1 1-RC-TC-1401

60.
Aside from providing flow to the quench spray rings, which ONE of the following identifies a function of the quench spray pumps?

a) Cool the ORS pump recirculation flow to aid NPSH.

b) Provide water to the IRS pump suction.

c) Provide flow to one half of each recirculation spray ring.

d) During outages, provide rapid RWST temperature reduction.

K/A: SYS026.A1.03 10CFR: 41.5

Level: Knowledge

Origin: NEW Applicability: Both

References: NCRODP-53-LP-1 Objective 5951

Correct Answer: b)

Plausible Distractors:

a. Cooled by the SW flow through the RSHX

c. Each QS header supplies 1 spray ring. There are two QS spray rings, both supplied by QS. The RS spray rings are supplied solely by RS.

d. During post outages cooldown of the RWST is a threshold for 350°F mode change; and maximization of tank cooldown is required. The RWST recirculation pumps perform this function.

Presentation

A. Purpose/function

1. The Quench Spray (QS) System is automatically initiated 2/4 containment pressure indicators exceed 27.75 psig or if the operator manually initiates containment spray. The applicable ESF relays are ENERGIZED in order to actuate quench spray.

2. The primary purpose of the QS System is to minimize the amount of fission products released to the public.

3. There are **three** major functions of the QS System

   a. to depressurize containment during a LOCA or a main steamline break inside containment

   b. to remove radioactive iodine from the containment atmosphere

   c. to supply cool water to IRS pump suction for NPSH

4. The QS System consists of two redundant subsystems, each capable of performing the functions of the QS System.

   a. Each QS subsystem pumps water from the Refueling Water Storage Tank (RWST) to spray headers located in the dome of the containment.

   b. The QS System depressurizes containment by spraying a fine mist of cold water into the containment atmosphere. The energy from the containment atmosphere is transferred to the cold water droplets,

(4) The suctions of the IRS pumps are located in 5.5 feet deep wells in the containment sump.

(5) In addition, to the water collected in the containment sump, 150 gpm (4" line with orifice) from each QS header is provided to each IRS pump suction. The QS water is relatively cool and increases the available NPSH of the IRS pumps.

(6) A ring header distributes the cooling water to four symmetrically arranged outlets that extend down to the inlet of the sump.

(a) These outlets are designed to ensure that the velocity of the injected water is slightly higher than the flow velocities of water entering the sump. In addition, each outlet has a 45-degree bend so that injection water is directed into the sump with a downward velocity component approximately equal to the local velocities in the sump.

(b) The 45-degree bend also reduces the horizontal velocity component of flow.

1) Each outlet pipe is oriented such that the flow is split by a cruciform.

2) The local velocities on the floor in the vicinity of the pump are low enough that air will not be drawn from the cold water injection piping and carried into the sump after the cold water flow

61.
Which ONE of the following components MUST be in service during refueling operations to allow containment purge to remain in operation?

a) At least one containment air recirculation fan.

b) At least one iodine removal fan.

c) Manipulator crane radiation monitor OR containment area radiation monitor.

d) At least one containment purge supply fan.

K/A: SYS029.K1.05 10CFR: 41.2 - 41.9

Level: Knowledge.

Origin: NEW Applicability: BOTH

References: 1-OP-21.2 Objective 9047

Correct Answer: a)

Plausible Distractors:

b. Iodine fans may be started and run for some time prior to opening CTMT, but are not allowed to be running when purge is in service.

c. Need 1-RM-162 AND 1-RM-159/160 to have CTMT purge in service (Auto actions for CTMT isolation come off these monitors).

d. Designed for but not commonly used due to overpressure potential. Normal alignment is exhaust fan(s) running and drawing fresh air into CTMT through open purge supply MOVs. No required link exists between these fans and purge system operation.

VIRGINIA POWER **NORTH ANNA POWER STATION**	PROCEDURE NO: 1-OP-21.2	
	UNIT NO: 1	REVISION NO: 19
PROCEDURE TYPE: OPERATING	EFFECTIVE DATE:	EXPIRATION DATE: N/A

PROCEDURE TITLE:

CONTAINMENT PURGE

REVISION SUMMARY:

- **NON-UPGRADED PROCEDURE**

- Incorporated E-PAR {P1} changes Initial Conditions step 2.2 to include defueled to allow the placing of containment purge in service.

- Incorporated OP 98-0193, which moved first note from step 4.1.16 prior to step 4.1.13. Changed note to read "≥" (greater than or equal to) vise ">" (greater than) due to verbatim compliance concerns. Added additional wording to step 4.1.13 to N/A which fan not started.

- Added step 4.1.7 to secure 1-HV-F-3A, 3B in accordance with OP 97-0276.

ELECTRONIC DISTRIBUTION — APPROVAL ON FILE

REFERENCES:

1. Flow Diagram 11715-FB-6A-10
2. UFSAR
3. Tech Specs:
   T.S. 1.8
   T.S. 3.6.1.1
   T.S. 3.6.1.4
   T.S. 3.6.3.1
   T.S. 3.6.5.1
   T.S. 3.3.3.1
   T.S. 3.9.9
4. CTS 02-91-2805-003, SER 1-91, Spent Fuel Pool Overflow Events
5. CTS Item 02-94-2220-001, Surry Enforcement Conference - 9/30/94, Charcoal Filter Degradation
6. Engineering Transmittal ET SE-96-0035, included with Rev 18
7. ICP-RMS-1-RM-159, RMS-159 Containment Particulate Radiation Monitor Calibration
8. Safety Evaluation 96 SE-OT-28, included with Rev 18

1.0 Purpose

1.1 Provide the detailed operating instructions for placing the Containment Purge System in and removing it from service.

1.1.1 Placing Purge System in operation.

1.1.2 Removing Purge System from Service

2.0 Initial Conditions

2.1 A known atmospheric condition exists in the containment as sampled by Health Physics.

2.2 Reactor is shutdown, in either mode 5 or 6 or defueled.

2.3 IF in Mode 6, THEN following Radiation Monitors are OPERABLE:

1-RM-RMS-159

1-RM-RMS-160

1-RM-RMS-162

2.4 IF in Mode 6, THEN at least one Containment Air Recirc Fan is in operation to provide representative sample for 1-RM-RMS-159 and 1-RM-RMS-160.

3.0 Precautions and Limitations

3.1 The reactor containment shall not be purged while the reactor coolant system temperature is > 200°F and containment is subatmospheric.

3.2 All automatic containment isolation valves in that unit shall be operable or at least one valve in each line shall be closed except in those systems which must be operated during refueling.

3.3 When it is desired to establish atmospheric conditions in the containment, do NOT under any circumstances open 1-HV-MOV-100B, CONT PURGE SUPPLY VALVE (outside valve) while vacuum is being broken, to prevent the possible collapse of purge system duct work.

3.4 Purges shall go through filter unless written authorization from Health Physics states otherwise.

3.5 Ventilation changes made when the fuel transfer tube is open may cause a pressure differential between Containment and the Fuel Building and result in level changes in the Spent Fuel Pit or Reactor Cavity. **(Reference 4)**

3.6 Due to possible Charcoal Filter degradation, the Auxiliary Building Iodine Filters MUST NOT be placed in service during or following painting, fire, welding, or chemical release in any ventilation zone communicating with the inlet to any Auxiliary Building Iodine Filters which will be operated. IF the Auxiliary Building Iodine Filters MUST be placed in service under these conditions, such as to mitigate radiological events, THEN the surveillance requirements of Tech Spec 4.7.8.1.b must be satisfied. **(Reference 5)**

3.7 At least one Containment Air Recirc Fan must be in operation to provide a representative sample for 1-RM-RMS-159 and 1-RM-RMS-160.

3.8 Sample flow for 1-RM-RMS-159 and 1-RM-RMS-160 must be between 8 cfm and 12 cfm to be considered operable to satisfy T.S. 3.9.9. **(References 6 and 8)**

61

Initials

4.0 Procedure

4.1 Placing Purge System in Operation.

_____ 4.1.1 ALL Initial Conditions are noted AND satisfied.

_____ 4.1.2 Precautions and Limitations are noted.

NOTE: The reactor containment shall not be purged while the reactor coolant system temperature is > 200°F AND containment is sub-atmospheric.

NOTE: All automatic containment isolation valves in the unit shall be operable OR at least one valve in each line shall be closed except in those systems which must be operated during refueling.

_____ 4.1.3 IF H. P. form has NOT been initiated, THEN initiate H. P. form for "Reactor Containment Release Permit".

NOTE: 1-PT-61.3.2 MUST be completed PRIOR to breaking containment vacuum by movement of any of the Purge and Exhaust Valves, IF Reactor is to be refueled or maintenance outage is to be commenced. The Type "C" Engineer may be contacted for further guidance.

_____ 4.1.4 Perform 1-PT-61.3.2, IF required.

_____ 4.1.5 Open 1-HV-MOV-100A, CONT PURGE SUPPLY VALVE (inside valve)

NOTE: When it is desired to establish atmospheric conditions in the containment, do NOT under any circumstances open 1-HV-MOV-100B, CONT PURGE SUPPLY VALVE (outside valve)while vacuum is being broken, to prevent the possible collapse of purge system duct work.

_____ 4.1.6 IF Containment is NOT at atmospheric pressure, THEN do the following:

_____ 4.1.6.1 Open 1-HV-MOV-102, CONT PURGE RELIEF VALVE to raise the containment pressure to atmospheric.

_____ 4.1.6.2 WHEN containment AND atmospheric pressure are equalized as indicated on PI-LM-100A, B, C or D, THEN close 1-HV-MOV-102, CONT PURGE RELIEF VALVE.

4.1.7 Ensure the following Containment Iodine Filter Fans, switches are in the OFF position:

_____ • 1-HV-F-3A

_____ • 1-HV-F-3B

4.1.8 IF Mode 6 entry is anticipated, THEN do the following:

(References 6 and 8)

_____ 4.1.8.1 Notify the I&C Department to perform the section of ICP-RMS-1-RM-159, RMS-159 Containment Particulate Radiation Monitor Calibration, for Rotameter Calibration for Entry into Mode 6 Operation.

_____ 4.1.8.2 Enter in the Action Statement Log to verify that 1-RM-RMS-159 and 1-RM-RMS-160 are operable with a sample flow rate of between 8 cfm and 12 cfm prior to entering Mode 6.

NOTE: HP Release Form must be obtained prior to proceeding with this OP.

NOTE: Purge shall go through filters unless written authorization from Health Physics states otherwise.

_____ 4.1.9 Align containment purge through the iodine filters or to bypass the filter as per 1-OP-21.5.

_____ 4.1.10 Open 1-HV-MOV-100B, CONT PURGE SUPPLY VALVE (outside valve).

_____ 4.1.11 Open 1-HV-MOV-100C, CONT PURGE EXH VALVE (inside valve).

4.1.12 Open applicable Purge Exhaust valve:

_____ IF max allowable release rate is less than 11,000 CFM, THEN open 1-MOV-HV-101, CONT PURGE EXH BYPASS VALVE.

_____ IF max allowable release rate is greater than or equal to 11,000 CFM, THEN open 1-HV-MOV-100D, CONT PURGE EXH VALVE (outside valve)

NOTE: An additional supply and exhaust fan may be used for additional ventilation if allowable release rate ≥ 22,000 CFM.

4.1.13 Start one OR both containment purge exhaust fans. Mark any fan not startedN/A:

_____ 1-HV-F-5A

_____ 1-HV-F-5B

_____ 4.1.14 Note flow increase on FR-HV-1212B.

_____ 4.1.15 IF flow > allowable, THEN throttle closed on 1-MOV-HV-101, CONT PURGE EXH BYPASS VALVE as required.

4.1.16 IF required, THEN start one containment supply fan.

_____ 1-HV-F-4A

_____ 1-HV-F-4B

NOTE: The following parameters initiate automatic functions which affect the purge and exhaust system.

1. High radiation levels in containment (RMS-159 & 160 and RMS-162) will close the containment purge system butterfly valves.

2. Air temperature leaving the steam heating coils at < 35°F will trip the supply fans.

3. Purge Supply Fans 1-HV-F-4A AND 4B will trip IF MOV-HV-100A OR MOV-HV-100B are NOT FULL OPEN. Purge Exhaust Fans 1-HV-F-5A AND 5B will trip IF MOV-HV-100C is NOT FULL OPEN OR MOV-HV-100D is NOT FULL OPEN AND MOV-HV-101 is FULL CLOSED.

NOTE: Steam Heating is required IF Containment temperature is less than 65°.

_____ 4.1.17 IF directed by Health Physics, remove containment purge flow from the iodine filter as per 1-OP-21.5.

Completed: _____ Date: _____

62.
Which ONE of the following design features prevents a loss of spent fuel pool level if a SFP cooling system leak develops?

a) Suction weir and cooling pump discharge check valves both located 20 feet above the fuel.

b) Suction weir located 20 feet above the fuel and cooling pump low suction pressure trip/lockout.

c) Return line siphon breaker and cooling pump discharge check valves both located 20 feet above the fuel.

d) Suction weir and return line siphon breaker both located 20 feet above the fuel.

K/A: SYS033.A1.01 10CFR: 41.5

Level: Knowledge

Origin: NEW Applicability: Both

References: NCRODP-49-LP-1 Objective 3753

Correct Answer: d.

Plausible Distractors:

a. Pump discharge check valves are located in the basement (below level of the fuel), providing no loss of SFP level protection.

b. Other pumps have low suction pressure trip/lockout; no such feature exists for the SFP pumps exist to prevent pump down.

c. (see "a").

alarm (window 1E-C7) at 290 feet, 4 inches (+6 inches) and level switch LS-FC-101 that actuates a SFP WATER LEVEL LOW (window 1E-C6) alarm at 289 feet, 4 inches (-6 inches).

4. Technical specification 3.9.11 requires at least 23 feet of water above the spent fuel assemblies in the SFP. This restriction ensures that sufficient water depth is available to remove 99 percent of the assumed 10 percent iodine gap activity released from the rupture of an irradiated fuel assembly. The minimum water depth is consistent with the assumptions of the accident analysis.

F. Transfer canal and cask area gates. [3751]

1. The normal source of pressure to the spent fuel pit gate seals is from the Service Air System, through an individual pressure regulator for each gate seal.

2. If the normal source of pressure to the gate seals is lost, then the fuel building service air piping can be isolated from the rest of the Service Air System, and then pressurized with nitrogen from a high pressure nitrogen bottle/regulator unit located in the fuel building basement.

G. SFP component purposes [3753]

1. Suction weir.,

In the SFP on the east wall is a suction weir. The weir is basically a stainless steel box, open on the top, that surrounds the penetrations by the SFP cooling pump suction lines in the pit wall. The purpose of the weir is to prevent the pumps from pumping down the SFP to a level below the top of the weir wall.

2. SFP cooling pumps.

   a. The SFP cooling pumps 1A and 1B provide the motive force for spent fuel cooling. The are centrifugal pumps with mechanical seals. Each pump has a capacity of 2750 gpm, powered from a 480 VAC motor control center (MCC 1H1-2S and 2H1-2S, respectively). The pumps take suction on the SFP weir through penetrations at an elevation of 286 feet, 2 inches in the east SFP walls and discharge to the SFP coolers. The suction piping is 10 inches outer diameter and can be cross-connected so that either pump can take suction on the other's supply line.

   b. Pump 1A (1B) takes suction on the SFP through SFP outlet valve 1-FC-1 (15) and suction valve 1-FC-5 (18). A cross-connect valve 1-FC-2 enables either outlet line to supply either pump suction. Pressure indicators are provided on both the pump suction line and discharge line. On the discharge side of the pump there is a check valve 1-FC-8 (21) and the pump discharge valve 1-FC-9 (22). Downstream of the pumps discharge valves is a cross-connect valve 1-FC-10 that enables either pump discharge to go to either cooler. From the pump discharge valve, the flow goes to the cooler inlet valve 1-FC-11 (23).

3. The return line to the SFP from the coolers has a 3/4-inch threaded plug that is removed when the SFP Cooling Subsystem is in operation. The resultant 3/4-inch hole acts as a siphon breaker, so that the SFP water does not inadvertently drain out by siphon effect. The plug is replaced only during a hydro test.

H. SFP cooling pump 1A is operated by a STOP/START control switch on vertical

63.
Given the following conditions:

- A small-break LOCA occurred
- RCPs were tripped as required by EOPs
- RCS pressure is 1650 psig
- Wide-range Tcs are 508°F and slowly decreasing
- Wide-range Ths are 525°F and slowly decreasing
- CETCs are 535°F and stable
- S/G narrow-range levels are approximately 15%
- S/G pressures are 715 psig and slowly decreasing
- Containment radiation peaked at 120,000 R/hr and is now 30,000 R/hr
- Containment pressure peaked at 22 psia and is now 15 psia

In accordance with 1-ES-1.2, Post-LOCA Cooldown and Depressurization, the requirements for natural circulation:

a) are not met, since CETCs are not decreasing.

b) are not met, since there is inadequate subcooling.

c) are not met, since S/G parameters are not satisfied.

d) are met.

K/A: SYS035.K3.01 10CFR: 41.7

Level: Analysis

Origin: NAPS 8/98 NRC (revised: incl. Adv. CTMT) Applicability: Both

References: 1-ES-1.2, steam tables Objective 13435

Correct Answer: d)

Plausible Distractors:

a. CETCs are one of the parameters which must be checked; they are not required to be decreasing..

b. If operator does not extrapolate, but uses Tsat for 1650 psia instead of 1665 psia, this would be correct.

c. When verifying heat sink, EOPs require 22% (CTMT adverse rqt.); when verifying natural circ, S/G level is not a concern.

CONTINUOUS ACTION PAGE FOR 1-ES-1.2

1. ADVERSE CONTAINMENT CRITERIA
   IF either of the following conditions exist, THEN use setpoints in brackets:
   - 20 psia Containment pressure, OR
   - Containment radiation has reached or exceeded 10^5 R/hr (70% on High Range Recorder).

2. RCP TRIP CRITERIA
   IF both conditions listed below exist, THEN trip all RCPs:
   - Charging Pumps - AT LEAST ONE RUNNING AND FLOWING TO RCS, AND
   - RCS subcooling based on Core Exit TCs - LESS THAN 20°F [65°F].

3. CHARGING PUMP RECIRC PATH CRITERIA
   - IF RCS pressure decreases to less than 1275 psig [1475 psig] AND RCPs tripped, THEN close Charging Pump Recirc Valves.
   - IF RCS pressure increases to 2000 psig, THEN open Charging Pump Recirc Valves.

4. SI REINITIATION CRITERIA
   IF either condition listed below occurs, THEN manually start Charging Pumps and align BIT:
   - RCS subcooling based on Core Exit TCs - LESS THAN 25°F [75°F], OR
   - PRZR level - CANNOT BE MAINTAINED GREATER THAN 21% [40%].

5. ECST LEVEL CRITERIA
   WHEN the ECST level decreases to 40%, THEN initiate 1-AP-22.5, LOSS OF EMERGENCY CONDENSATE STORAGE TANK 1-CN-TK-1.

6. SECONDARY INTEGRITY CRITERIA
   IF either of the following conditions exist AND the affected SG has NOT been isolated, THEN GO TO 1-E-2, FAULTED STEAM GENERATOR ISOLATION, STEP 1:
   - Any SG pressure is decreasing in an uncontrolled manner, OR
   - Any SG has completely depressurized.

7. 1-E-3 TRANSITION CRITERIA
   IF either of the following conditions exist, THEN manually start Charging Pumps, align BIT, and GO TO 1-E-3, STEAM GENERATOR TUBE RUPTURE, STEP 1:
   - Any SG level is increasing in an uncontrolled manner, OR
   - Any SG has abnormal radiation.

8. COLD LEG RECIRCULATION TRANSFER CRITERIA
   IF RWST level decreases to less than 23%, THEN GO TO 1-ES-1.3, TRANSFER TO COLD LEG RECIRCULATION, STEP 1.

9. QS TERMINATION CRITERIA
   IF either condition listed below occurs, THEN reset CDA, terminate QS, and isolate the Chemical Addition Tank using Attachment 4:
   - Containment pressure - LESS THAN 12 PSIA, OR
   - RWST level - LESS THAN 3% AND QS Pump amps - FLUCTUATING

10. CASING COOLING TANK LEVEL
    WHEN the Casing Cooling Tank level decreases to 4%, THEN close 1-RS-MOV-100A and 1-RS-MOV-100B and stop both Casing Cooling Pumps.

NOTE: The following conditions support or indicate natural circulation flow.

1. __ VERIFY NATURAL CIRCULATION FLOW — Increase dumping steam.

   - RCS subcooling based on Core Exit TCs - GREATER THAN 25°F [75°F]
   - SG pressures - STABLE OR DECREASING
   - RCS Hot Leg temperatures - STABLE OR DECREASING
   - Core Exit TCs - STABLE OR DECREASING
   - RCS Cold Leg temperatures - AT SATURATION TEMPERATURE FOR SG PRESSURE

2. __ CONTINUE TO MONITOR NATURAL CIRCULATION FLOW UNTIL FORCED CIRCULATION IS ESTABLISHED

Table 2: Saturated Steam: Pressure Table

Abs Press. Lb/Sq In. p	Temp Fahr t	Specific Volume Sat. Liquid v_f	Evap v_{fg}	Sat. Vapor v_g	Enthalpy Sat. Liquid h_f	Evap h_{fg}	Sat. Vapor h_g	Entropy Sat. Liquid s_f	Evap s_{fg}	Sat. Vapor s_g	Abs Press. Lb/Sq In. p
0.08865	32.018	0.016022	3302.4	3302.4	0.0003	1075.5	1075.5	0.0000	2.1872	2.1872	0.08865
0.25	59.323	0.016032	1235.5	1235.5	27.382	1060.1	1087.4	0.0542	2.0425	2.0967	0.25
0.50	79.586	0.016071	641.5	641.5	47.623	1048.6	1096.3	0.0925	1.9446	2.0370	0.50
1.0	101.74	0.016136	333.59	333.60	69.73	1036.1	1105.8	0.1326	1.8455	1.9781	1.0
5.0	162.24	0.016407	73.515	73.532	130.20	1000.9	1131.1	0.2349	1.6094	1.8443	5.0
10.0	193.21	0.016592	38.404	38.420	161.26	982.1	1143.3	0.2836	1.5043	1.7879	10.0
14.696	212.00	0.016719	26.782	26.799	180.17	970.3	1150.5	0.3121	1.4447	1.7568	14.696
15.0	213.03	0 016726	26.274	26.290	181.21	969.7	1150.9	0.3137	1.4415	1.7552	15.0
20.0	227.96	0.016834	20.070	20.087	196.27	960.1	1156.3	0.3358	1.3962	1.7320	20.0
30.0	250.34	0.017009	13.7266	13.7436	218.9	945.2	1164.1	0.3682	1.3313	1.6995	30.0
40.0	267.25	0.017151	10.4794	10.4965	236.1	933.6	1169.8	0.3921	1.2844	1.6765	40.0
50.0	281.02	0.017274	8.4967	8.5140	250.2	923.9	1174.1	0.4112	1.2474	1.6586	50.0
60.0	292.71	0.017383	7.1562	7.1736	262.2	915.4	1177.6	0.4273	1.2167	1.6440	60.0
70.0	302.93	0.017482	6.1875	6.2050	272.7	907 8	1180.6	0.4411	1.1905	1.6316	70.0
80.0	312.04	0.017573	5.4536	5.4711	282.1	900.9	1183.1	0.4534	1.1675	1.6208	80.0
90.0	320.28	0.017659	4.8779	4.8953	290.7	894.6	1185.3	0.4643	1.1470	1.6113	90.0
100.0	327.82	0.017740	4.4133	4.4310	298.5	888.6	1187.2	0.4743	1.1284	1.6027	100.0
110.0	334.79	0.01782	4.0306	4.0484	305.8	883.1	1188.9	0.4834	1.1115	1.5950	110.0
120.0	341.27	0.01789	3.7097	3.7275	312.6	877.8	1190.4	0.4919	1.0960	1.5879	120.0
130.0	347.33	0.01796	3.4364	3.4544	319.0	872.8	1191.7	0.4998	1.0815	1.5813	130.0
140.0	353.04	0.01803	3.2010	3.2190	325.0	868.0	1193.0	0.5071	1.0681	1.5752	140.0
150.0	358.43	0.01809	2.9958	3.0139	330.6	863.4	1194.1	0.5141	1.0554	1.5695	150.0
160.0	363.55	0.01815	2.8155	2.8336	336.1	859.0	1195.1	0.5206	1.0435	1.5641	160.0
170.0	368.42	0.01821	2.6556	2.6738	341.2	854.8	1196.0	0.5269	1.0322	1.5591	170.0
180.0	373.08	0.01827	2.5129	2.5312	346.2	850.7	1196.9	0.5328	1.0215	1.5543	180.0
190.0	377.53	0.01833	2.3847	2.4030	350.9	846.7	1197.6	0.5384	1.0113	1.5498	190.0
200.0	381.80	0.01839	2.2689	2.2873	355.5	842.8	1198.3	0.5438	1.0016	1.5454	200.0
210.0	385.91	0.01844	2.16373	2.18217	359.9	839.1	1199.0	0.5490	0.9923	1.5413	210.0
220.0	389.88	0.01850	2.06779	2.08629	364.2	835.4	1199.6	0.5540	0.9834	1.5374	220.0
230.0	393.70	0.01855	1.97991	1.99846	368.3	831.8	1200.1	0.5588	0.9748	1.5336	230.0
240.0	397.39	0.01860	1.89909	1.91769	372.3	828.4	1200.6	0.5634	0.9665	1.5299	240.0
250.0	400.97	0.01865	1.82452	1.84317	376.1	825.0	1201.1	0.5679	0.9585	1.5264	250.0
260.0	404.44	0.01870	1.75548	1.77418	379.9	821.6	1201.5	0.5722	0.9508	1.5230	260.0
270.0	407.80	0.01875	1.69137	1.71013	383.6	818.3	1201.9	0.5764	0.9433	1.5197	270.0
280.0	411.07	0.01880	1.63169	1.65049	387.1	815.1	1202.3	0.5805	0.9361	1.5166	280.0
290.0	414.25	0.01885	1.57597	1.59482	390.6	812.0	1202.6	0.5844	0.9291	1.5135	290.0
300.0	417.35	0.01889	1.52384	1.54274	394.0	808.9	1202.9	0.5882	0.9223	1.5105	300.0
350.0	431.73	0.01912	1.30642	1.32554	409.8	794.2	1204.0	0.6059	0.8909	1.4968	350.0
400.0	444.60	0.01934	1.14162	1.16095	424.2	780.4	1204.6	0.6217	0.8630	1.4847	400.0
450.0	456.28	0.01954	1.01224	1.03179	437.3	767.5	1204.8	0.6360	0.8378	1.4738	450.0
500.0	467.01	0.01975	0.90787	0.92762	449.5	755.1	1204.7	0.6490	0.8148	1.4639	500.0
550.0	476.94	0.01994	0.82183	0.84177	460.9	743.3	1204.3	0.6611	0.7936	1.4547	550.0
600.0	486.20	0.02013	0.74962	0.76975	471.7	732.0	1203.7	0.6723	0.7738	1.4461	600.0
650.0	494.89	0.02032	0.68811	0.70843	481.9	720.9	1202.8	0.6828	0.7552	1.4381	650.0
700.0	503.08	0.02050	0.63505	0.65556	491.6	710.2	1201.8	0.6928	0.7377	1.4304	700.0
750.0	510.84	0.02069	0.58880	0.60949	500.9	699.8	1200.7	0.7022	0.7210	1.4232	750.0
800.0	518.21	0.02087	0.54809	0.56896	509.8	689.6	1199.4	0.7111	0.7051	1.4163	800.0
850.0	525.24	0.02105	0.51197	0.53302	518.4	679.5	1198.0	0.7197	0.6899	1.4096	850.0
900.0	531.95	0.02123	0.47968	0.50091	526.7	669.7	1196.4	0.7279	0.6753	1.4032	900.0
950.0	538.39	0.02141	0.45064	0.47205	534.7	660.0	1194.7	0.7358	0.6612	1.3970	950.0
1000.0	544.58	0.02159	0.42436	0.44596	542.6	650.4	1192.9	0.7434	0.6476	1.3910	1000.0
1050.0	550.53	0.02177	0.40047	0.42224	550.1	640.9	1191.0	0.7507	0.6344	1.3851	1050.0
1100.0	556.28	0.02195	0.37863	0.40058	557.5	631.5	1189.1	0.7578	0.6216	1.3794	1100.0
1150.0	561.82	0.02214	0.35859	0.38073	564.8	622.2	1187.0	0.7647	0.6091	1.3738	1150.0
1200.0	567.19	0.02232	0.34013	0.36245	571.9	613.0	1184.8	0.7714	0.5969	1.3683	1200.0
1250.0	572.38	0.02250	0.32306	0.34556	578.8	603.8	1182.6	0.7780	0.5850	1.3630	1250.0
1300.0	577.42	0.02269	0.30722	0.32991	585.6	594.6	1180.2	0.7843	0.5733	1.3577	1300.0
1350.0	582.32	0.02288	0.29250	0.31537	592.3	585.4	1177.8	0.7906	0.5620	1.3525	1350.0
1400.0	587.07	0.02307	0.27871	0.30178	598.8	576.5	1175.3	0.7966	0.5507	1.3474	1400.0
1450.0	591.70	0.02327	0.26584	0.28911	605.3	567.4	1172.8	0.8026	0.5397	1.3423	1450.0
1500.0	596.20	0.02346	0.25372	0.27719	611.7	558.4	1170.1	0.8085	0.5288	1.3373	1500.0
1550.0	600.59	0.02366	0.24235	0.26601	618.0	549.4	1167.4	0.8142	0.5182	1.3324	1550.0
1600.0	604.87	0.02387	0.23159	0.25545	624.2	540.3	1164.5	0.8199	0.5076	1.3274	1600.0
1650.0	609.05	0.02407	0.22143	0.24551	630.4	531.3	1161.6	0.8254	0.4971	1.3225	1650.0
1700.0	613.13	0.02428	0.21178	0.23607	636.5	522.2	1158.6	0.8309	0.4867	1.3176	1700.0
1750.0	617.12	0.02450	0.20263	0.22713	642.5	513.1	1155.6	0.8363	0.4765	1.3128	1750.0
1800.0	621.02	0.02472	0.19390	0.21861	648.5	503.8	1152.3	0.8417	0.4662	1.3079	1800.0
1850.0	624.83	0.02495	0.18558	0.21052	654.5	494.6	1149.0	0.8470	0.4561	1.3030	1850.0
1900.0	628.56	0.02517	0.17761	0.20278	660.4	485.2	1145.6	0.8522	0.4459	1.2981	1900.0
1950.0	632.22	0.02541	0.16999	0.19540	666.3	475.8	1142.0	0.8574	0.4358	1.2931	1950.0
2000.0	635.80	0.02565	0.16266	0.18831	672.1	466.2	1138.3	0.8625	0.4256	1.2881	2000.0
2100.0	642.76	0.02615	0.14885	0.17501	683.8	446.7	1130.5	0.8727	0.4053	1.2780	2100.0
2200.0	649.45	0.02669	0.13603	0.16272	695.5	426.7	1122.2	0.8828	0.3848	1.2676	2200.0
2300.0	655.89	0.02727	0.12406	0.15133	707.2	406.0	1113.2	0.8929	0.3640	1.2569	2300.0
2400.0	662.11	0.02790	0.11287	0.14076	719.0	384.8	1103.7	0.9031	0.3430	1.2460	2400.0
2500.0	668.11	0.02859	0.10209	0.13068	731.7	361.6	1093.3	0.9139	0.3206	1.2345	2500.0
2600.0	673.91	0.02938	0.09172	0.12110	744.5	337.6	1082.0	0.9247	0.2977	1.2225	2600.0
2700.0	679.53	0.03029	0.08165	0.11194	757.3	312.3	1069.7	0.9356	0.2741	1.2097	2700.0
2800.0	684.96	0.03134	0.07171	0.10305	770.7	285.1	1055.8	0.9468	0.2491	1.1958	2800.0
2900.0	690.22	0.03262	0.06158	0.09420	785.1	254.7	1039.8	0.9588	0.2215	1.1803	2900.0
3000.0	695.33	0.03428	0.05073	0.08500	801.8	218.4	1020.3	0.9728	0.1891	1.1619	3000.0
3100.0	700.28	0.03681	0.03771	0.07452	824.0	169.3	993.3	0.9914	0.1460	1.1373	3100.0
3200.0	705.08	0.04472	0.01191	0.05663	875.5	56.1	931.6	1.0351	0.0482	1.0832	3200.0
3208.2*	705.47	0.05078	0.00000	0.05078	906.0	0.0	906.0	1.0612	0.0000	1.0612	3208.2*

*Critical pressure

T_{sat} @ 1665 psia: 613.13 − 609.05 = 4.08; 4.08 × .3 = 1.224; 609.05 + 1.22 = 610.27

75°F subc. = 610.27 − 75.00 = 535.27

64.
During 100% power operation, channel III first stage pressure transmitter (1-MS-PT-446) fails low. Which ONE of the following describes the effects on the steam dump system?

a) The dumps are armed.

b) The steam dump system will be unaffected during a load reject.

c) The steam dumps will modulate closed properly following a unit trip.

d) The dumps will fully open until closed by P-13.

K/A: SYS039.K1.06 10CFR: 41.2 - 41.9

Level: Comprehension.

Origin: NEW Applicability: Both

References: NCRODP-23B-LP-1 Objective 10248

Correct Answer: c)

Plausible Distractors:

a. Correct if channel IV failed low (1-MS-PT-447).

b. Steam dumps would open fully on a load reject signal and not operate as designed.

d. If there were an arming signal present, this would be true.

c. SOV 3 is energize to bypass positioner so it will fail to the bypass mode and allow air through top to SOV 1 and 2 upon a loss of power.

3. PT-446, Turbine First Stage Pressure (Demand)

a. Effects steam dumps when in load reject mode of T_{avg} control mode.

b. Fails low; large demand signal generated but dumps stay closed unless arming signal present.

c. Fails high; no demand signal will develop.

4. PT-447, Turbine First Stage Pressure (Arm)

a. Effects arming circuit only.

b. Fails low; steam dumps arm on C-7.

c. Fails high; lose arming capability on load reject. [10248]

5. PT-464, Steam Pressure

a. Effects steam pressure mode of control circuit only.

b. Fails high - If dumps in steam pressure mode and controller in auto the dumps will open.

c. Fails low - In steam pressure mode and controller in auto, demand signal is lost. [10240]

EVENT 3: First stage pressure channel failures

Have trainees refer to their Steam Dump Control Circuit diagram handouts and, referring to flip chart, discuss first stage pressure channel failures as follows:

Review the effects of PT-446 failure on:

- the arming circuit [no effect]
- the turbine trip controller [no effect]
- the load reject controller [fails high: lose steam dump capability on load reject; fails low: T_{ref} goes to 547°F, if median T_{ave} is > 551°F, steam dump demand will exist. Steam dumps will not open unless they are armed **and** in the T_{ave} mode.]

Review the effects of PT-447 failure on:

- the turbine trip controller [no effect]
- the load reject controller [no effect]
- the arming circuit [fails high: lose arming capability on load reject; fails low: if failure occurs at a high enough rate, permissive C-7 will pick up and arm the steam dumps. Steam dumps will not open unless a demand exists.]

Place the simulator in run and verify PT-447 selected for rod control, SGWLC and C-5. Run the first malfunction (PT-446 fails low), then freeze the simulator. Observe the steam dump demand indicator and **lack of** arming signal. Also, note that status light M-E4, STM DUMP TRIP OPEN ACTIVATION, is lit. Finally, point out that T_{ref} for rod control was not affected, and that PT-446 **is** selected for most scenario initial conditions. Stress that T_{ref} to rod control is not the same as T_{ref} to steam dumps.

Recall IC #103 (100% power) and run the next malfunction (PT-447 fails low), then freeze the simulator. Observe the indications of steam dumps armed and lack of a demand signal. Place the simulator in run. Place the mode selector switch in RESET, noting permissive status light P-E4 is extinguished. Freeze the simulator and recall IC #104 (100% power).

Ask the trainees: After PT-447 fails low and C-7 is reset, what is the status of the steam dumps? [Answer: The turbine trip controller is available in Tave mode, but the load reject controller is not available.]

Place the simulator in run and run another PT-446 failure (low). Discuss with the crew the plant response to PT-447 failing low with PT-446 still failed. Run the next malfunction (PT-447 fails low) and observe the plant response. Freeze the simulator and recall IC #105 (100% power).

65.
The following conditions exist on unit 1:

- Unit is at 100% power.
- Air ejector radiation monitor 1-RM-SV-121 indication spiked, actuating the high and high-high alarms.
- 1-RM-SV-121 indicating meter has returned to normal.
- No other indications of primary to secondary leakage exist.

Which ONE of the following is correct concerning the air ejector discharge flow path alignment?

a) When the operator resets the high-high alarm, the air ejector discharge will automatically realign to the vent stack.

b) When the operator resets the high and high-high alarms, the air ejector discharge will automatically realign to the vent stack.

c) The high-high alarm will clear when the indication returns to normal, and the air ejector discharge will automatically realign to the vent stack.

d) The high and high-high alarms will clear when the indication returns to normal, and the air ejector discharge will automatically realign to the vent stack.

K/A: SYS055.K1.06 10CFR: 41.2 - 41.9

Level: Comprehension

Origin: NEW Applicability: Both

References: NCRODP-46-LP-1 Objective 5296

Correct Answer: a)

Plausible Distractors:

b. The high-high alarm must be cleared manually; the high alarm clears when the indication resturns to normal; also, the high alarm has nothing to do with the automatic actions (although the fuel building monitor does require both the high and high-high alarms to cause automatic actions).

c. The **high** alarm will clear when the indication returns to normal.

d. The **high** alarm will clear when the indication returns to normal.

3. Condenser air ejector (RM-SV-121)

   a. Hi-Hi rad alarm - automatically diverts effluent from the vent stack to the containment atmosphere.

      (1) After Hi-Hi rad condition and alarm clears, effluent will automatically realign to the vent stack.

   b. A Hi-Hi rad alarm with an φA signal:

      (1) Isolates aux steam to the air ejectors. (1-AS-FCV-100A and 100B)

      (2) All air ejector discharge valves close 1-SV-TV-102-1, 103 and 102-2

4. Process vent (RM-GW-101 and 102)

   a. Hi-Hi alarm signal automatically performs the following:

      (1) Closes FCV-GW-101, flow control valve from the waste gas decay tanks.

      (2) Closes the containment vacuum pump discharge trip valves.

      (3) This in turn trips the vacuum pumps.

5. Containment gaseous and particulate (RM-RMS-159 and 160) and manipulator crane area (RMS-162).

   Hi-Hi alarm signal automatically performs the following:

66. (Reference provided)
The following conditions exist:

- Both units are at 100% power with no equipment out of service (except as stated below).
- Unit 1 service water pumps are running.
- Unit 2 "B" charging pump is tagged for seal maintenance.
- "B" RSST feeder breaker spuriously trips (no electrical fault exists).

The SRO directs you to perform the 0-AP-10 attachment to configure EDG loads to prevent overloading. Which ONE of the following describes the required pump manipulations?

a) Start 2-SW-P-1B, stop 1-SW-P-1A (optional).

b) Start 2-SW-P-1A, stop 1-SW-P-1B (optional), place 2-CH-P-1A in PULL-TO-LOCK.

c) Start 2-SW-P-1A, stop 1-SW-P-1B (optional), start 2-CH-P-1A.

d) Start 2-SW-P-1B, stop 1-SW-P-1A (optional), stop 2-CH-P-1A and return to AUTO.

K/A: SYS062.A2.11 10CFR: 41.5, 43.5

Level: Comprehension

Origin: NEW Applicability: Both

References: 0-AP-10 Objective 11548

Correct Answer: c)

Plausible Distractors:

a. Misconceptions about emergency bus normal power supplies and charging pump alignment (recent change to charging pump auto-start scheme).

b. Misconception about charging pump alignment (recent change to charging pump auto-start scheme).

d. Misconceptions about emergency bus normal power supplies and charging pump alignment (recent change to charging pump auto-start scheme).

3.0 INITIAL CONDITIONS

3.1 IF Unit 2 is in Mode 1, 2, 3, or Mode 4 with all T_Cs > 270°F, THEN 2-CH-P-1C (ALT) is in service.

3.2 IF Unit 2 is in Mode 4 with any $T_C \leq 270°F$, Mode 5, or Mode 6, THEN 2-CH-P-1B is NOT the operable pump.

3.3 Review the equipment status to verify station configuration supports the performance of this procedure.

4.0 PRECAUTIONS AND LIMITATIONS

4.1 Comply with the following guidelines when marking steps N/A:

- IF the conditional requirements of a step do not require the action to be performed, THEN mark the step N/A.
- IF any other step is marked N/A, THEN have the Shift Supervisor (or designee) approve the N/A and justify the N/A on the Procedure Cover Sheet.

4.2 DCP 95-227, Charging Pump Interlock Logic Modification, resulted in the following changes:

- WHEN Unit 2 is in Mode 1-4, THEN 2-CH-P-1C is NOT considered operable unless it is in service.
- Removal of the "A" or "B" Charging Pump breaker control or trip fuses will no longer cause a letdown isolation.

Init Verif

5.0 INSTRUCTIONS

5.1 Initial Preparation for 2-CH-P-1B Maintenance

_____ 5.1.1 Verify Initial Conditions are satisfied.

_____ 5.1.2 Review Precautions and Limitations.

_____ 5.1.3 IF it is desired to defeat Panel B-C8, CH PP 1B GEARBOX COOLER INLET LO FLOW, THEN obtain a key (located in the Administrative Key Locker) to the door to 2-EI-CB-21, Hathaway Cabinet.

5.1.4 IF RHR is in service, THEN do the following: **(Reference 2.4.2)**

_____ a. Have STA complete 2-GOP-13.0, Alternate Core Cooling Method Assessment.

_____ SS b. Verify adequate alternate core cooling is available.

_____ 5.1.5 IF ALL RCS T_cs are > 270° F, THEN verify 2-CH-P-1C (ALT) is in service.

_____ 5.1.6 IF ANY RCS T_c is ≤ 270° F, THEN verify 2-CH-P-1B is NOT the operable Charging Pump. IF required, THEN swap Charging Pumps using 2-OP-8.1, Chemical and Volume Control System.

Completed: _____ Date: _____

(Charging Pump)	"A" 15H6	C_{NORM} 15H7	B 15J6	C_{ALT} 15J7
AUTO STARTS	*PT-1121 <1120 psig *SI (TRAIN A) *UV/DV ON "J" 4160V *15H7,15J6,15J7 ALL OPEN	NONE	*PT-1121 <1120 psig *SI (TRAIN B) *UV/DV ON "H" 4160V *15H7,15H6,15J7 ALL OPEN	NONE
START PERMIS-SIVES	NO GROUND/ PHASE OC	*NO GROUND/PHASE OC *15J7 NOT CLOSED *NO 86 LO (SEE TRIPS)	NO GROUND/ PHASE OC	*NO GROUND/PHASE OC *15H7 NOT CLOSED *NO 86 LO (SEE TRIPS)
TRIPS	GROUND/ PHASE OC	*GROUND/PHASE OC *UV ON 'H' BUS WITH 15H6 CLOSED (IN CONN) *15H6 & 15J6 BOTH CLOSED (IN CONN) *15J7 RACKED IN	GROUND/ PHASE OC	*GROUND/PHASE OC *UV ON 'J' BUS WITH 15J6 CLOSED (IN CONN) *15J6 & 15H6 BOTH CLOSED (IN CONN) *15H7 RACKED IN

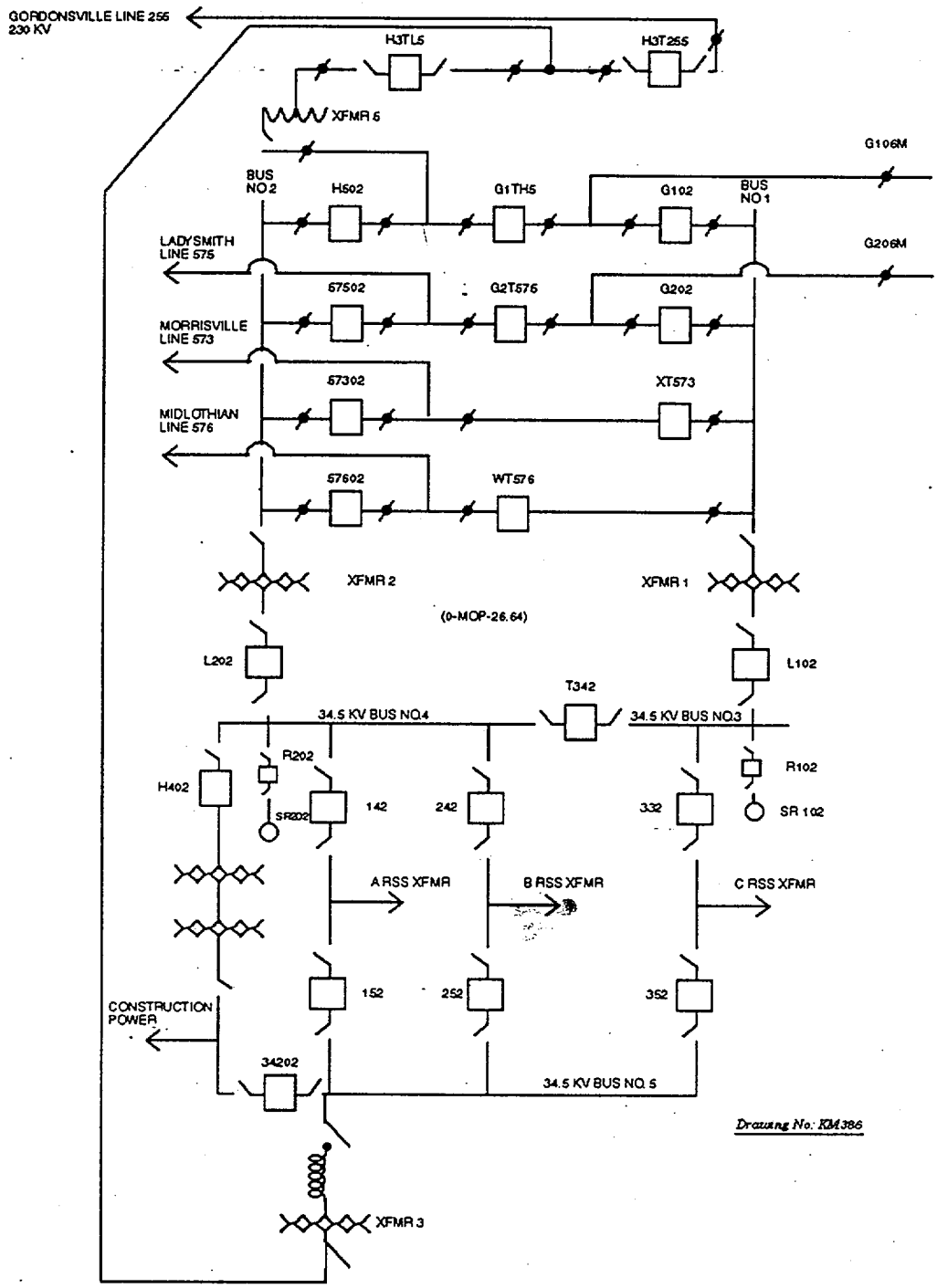
GORDONSVILLE LINE 255
230 KV
H3TL5
H3T255
XFMR 5
G106M
BUS NO 2
H502
G1TH5
G102
BUS NO 1
LADYSMITH LINE 575
G206M
57502
G2T576
G202
MORRISVILLE LINE 573
57302
XT573
MIDLOTHIAN LINE 576
57602
WT576
XFMR 2
XFMR 1
(0-MOP-26.64)
L202
L102
T342
34.5 KV BUS NO.4
34.5 KV BUS NO.3
R202
R102
H402
SR202
142
242
332
SR 102
A RSS XFMR
B RSS XFMR
C RSS XFMR
152
252
352
CONSTRUCTION POWER
34202
34.5 KV BUS NO. 5
Drawing No: KM386
XFMR 3

SWITCHYARD

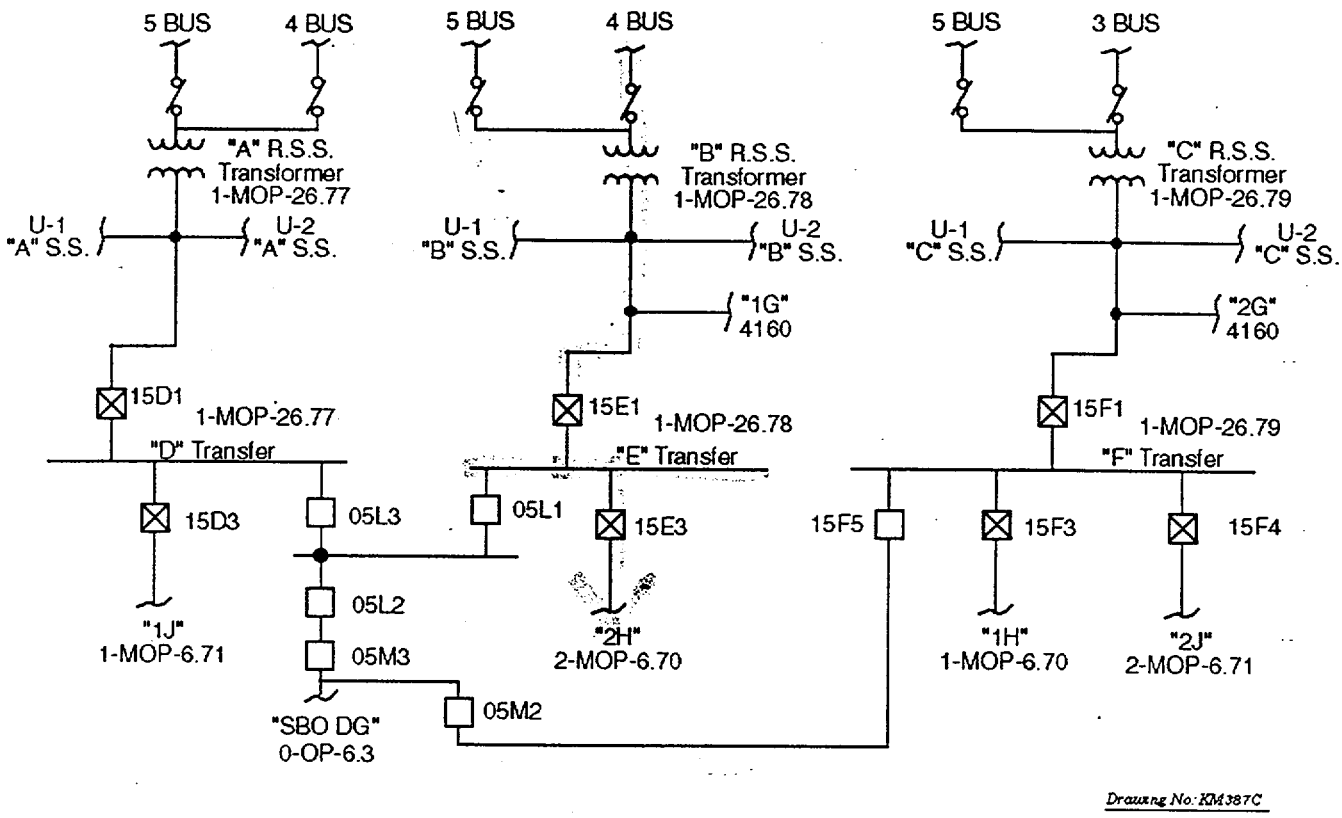

RSS TRANSFORMER AND TRANSFER BUSSES

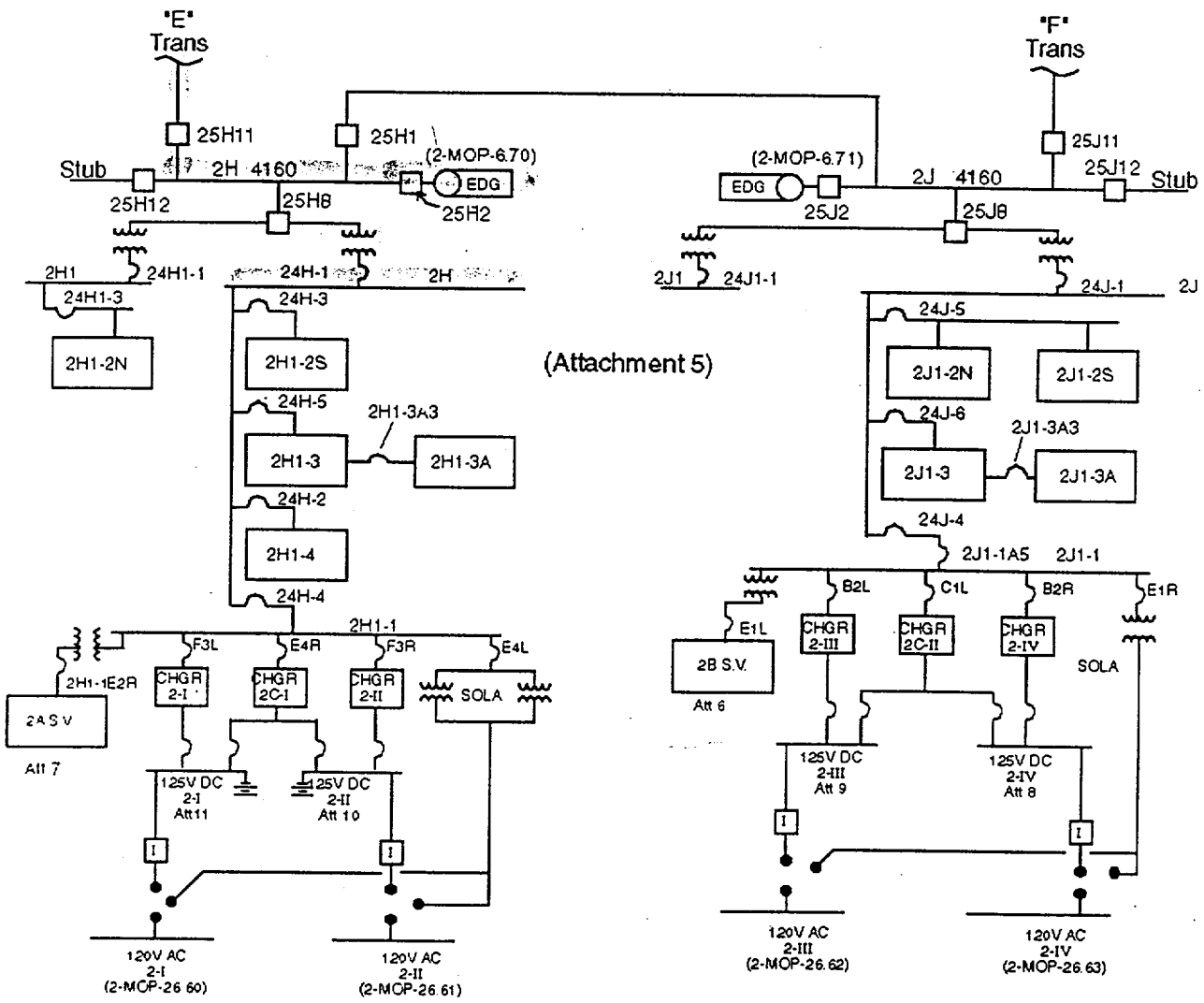

UNIT 2 EMERGENCY POWER

STEP	ACTION/EXPECTED RESPONSE	RESPONSE NOT OBTAINED
32.__	CHECK UNIT 2 120-VAC SEMI-VITAL BUS - ENERGIZED:	
	a) 2A - VOLTAGE INDICATED	a) Initiate Attachment 7.
	b) 2B - VOLTAGE INDICATED	b) Initiate Attachment 6.
	NOTE: If an EDG is the sole source of power to its Emergency Bus, then initiating Attachment 21 should be a high priority to prevent overloading of the EDG.	
33.__	VERIFY UNIT 1 EMERGENCY DIESEL GENERATORS - NOT THE SOLE SOURCE OF POWER TO THE ENERGIZED EMERGENCY BUS(SES)	IF neither SI NOR CDA has been actuated, THEN initiate Attachment 21, UNIT 1 EDG LOAD CONFIGURATION TO PREVENT OVERLOADING.
	NOTE: If an EDG is the sole source of power to its Emergency Bus, then initiating Attachment 20 should be a high priority to prevent overloading of the EDG.	
34.__	VERIFY UNIT 2 EMERGENCY DIESEL GENERATORS - NOT THE SOLE SOURCE OF POWER TO THE ENERGIZED EMERGENCY BUS(SES)	IF neither SI NOR CDA has been actuated, THEN initiate Attachment 20, UNIT 2 EDG LOAD CONFIGURATION TO PREVENT OVERLOADING.

66

NOTE: Monitor EDG load parameters closely during any pump operations.

1. IF 2H EDG is the sole source of power to 2H Emergency Bus, THEN do the following to limit the amount of instantaneous loading that could occur in the event of an SI/CDA:

__ a) Start 2-SW-P-1A.

__ b) IF 1-SW-P-1B is running on the same SW Header as 2-SW-P-1A AND 1J EDG is NOT the sole source of power to the 1J Emergency bus, THEN 1-SW-P-1B may be placed in AUTO-AFTER-STOP.

NOTE: 2-CH-P-1C, C Charging Pump, has no automatic start features. If both 2-CH-P-1A and 2-CH-P-1B are running, then 2-CH-P-1C will receive an auto trip.

c) Align Charging Pumps as follows:

__ 1) IF 2-CH-P-1C is running on the 2H bus, THEN place 2-CH-P-1A in Pull-To-Lock.

__ 2) IF 2-CH-P-1C is NOT running on the 2H bus AND 2-CH-P-1A is available, THEN start 2-CH-P-1A.

__ 3) IF 2-CH-P-1B is running, AND 2J EDG is NOT the sole source of power to the 2J Emergency Bus, THEN 2-CH-P-1B may be placed in AUTO-AFTER-STOP.

(STEP 1 CONTINUED ON NEXT PAGE)

1. IF 2H EDG is the sole source of power to 2H Emergency Bus, THEN do the following (Continued):

NOTE: The basis for the EDG load limit is 1500 Kw of loads will start on a CDA. The EDG is rated for 3000 Kw. The EDG cannot initially be loaded >1500 Kw, with the exception of loads that will trip on a CDA signal.

__ d) 2H EDG loading prior to any accident must be limited to 1500 Kw plus the load values of any loads which trip upon an accident signal as listed below. Determine 2H EDG load limit as follows:

(x) - Total of KW ratings of all RUNNING equipment from the table below.

_____ + 1500 Kw = _____
(x) EDG Load Limit

NOTE: IF 2-HV-F-1C is running on 2H emergency Bus, THEN include the Kw rating in the calculation. 2-FW-P-3A is included because the pump is assumed to start during an accident condition.

LOAD	KW
2-CC-P-1A	311
2-HV-F-37A	29
2-HV-F-37B	29
2-HV-F-37C	29
2-HV-F-1A	155
2-HV-F-1C	155
2-FW-P-3A	284

__ e) IF existing EDG load is greater than the limit calculated in substep 1d above, THEN reduce EDG load to less than or equal to the calculated limit.

66

2. IF 2J EDG is the sole source of power to 2J Emergency Bus, THEN do the following to limit the amount of instantaneous loading that could occur in the event of an SI/CDA:

__ a) Start 2-SW-P-1B.

__ b) IF 1-SW-P-1A is running on the same SW Header as 2-SW-P-1B AND 1H EDG is NOT the sole source of power to the 1H Emergency bus, THEN 1-SW-P-1A may be placed in AUTO-AFTER-STOP.

c) Align Charging Pumps as follows:

__ 1) IF 2-CH-P-1C is running on the 2J bus, THEN place 2-CH-P-1B in Pull-To-Lock.

__ 2) IF 2-CH-P-1C is NOT running on the 2J bus AND 2-CH-P-1B is available, THEN start 2-CH-P-1B.

__ 3) IF 2-CH-P-1A is running, AND 2H EDG is NOT the sole source of power to the 2H Emergency Bus, THEN 2-CH-P-1A may be placed in AUTO-AFTER-STOP.

NOTE: The basis for the EDG load limit is 1500 Kw of loads will start on a CDA. The EDG is rated for 3000 Kw. The EDG cannot initially be loaded >1500 Kw, with the exception of loads that will trip on a CDA signal.

___ d) 2J EDG loading prior to any accident must be limited to 1500 Kw plus the load values of any loads which trip upon an accident signal as listed below. Determine 2J EDG load limit as follows:

(x) - Total of KW ratings of all RUNNING equipment from the table below.

_____ + 1500 Kw = _____
(x) EDG Load Limit

NOTE: IF 2-HV-F-1C is running on 2J Emergency Bus, THEN include the Kw rating in the calculation. 2-FW-P-3B is included because the pump is assumed to start during an accident condition.

LOAD	KW
2-CC-P-1B	311
2-HV-F-37D	29
2-HV-F-37E	29
2-HV-F-37F	29
2-HV-F-1B	155
2-HV-F-1C	155
2-FW-P-3B	284

___ e) IF existing EDG load is greater than the limit calculated in substep 2d above, THEN reduce EDG load to less than or equal to the calculated limit.

66

3. WHEN Offsite power is restored to the Unit 2 Emergency Busses, THEN restore the Service Water and Charging systems to normal as follows:

   ___ a) Restore Service Water Pump alignment as directed by the Shift Supervisor using 0-OP-49.4, SHIFTING SERVICE WATER COMPONENTS (PUMPS AND SPRAYS). Ensure all operable SW Pumps not running are in AUTO.

   ___ b) Restore Charging Pump alignment as directed by the Shift Supervisor using 2-OP-8.1, CHEMICAL AND VOLUME CONTROL SYSTEM. Ensure all operable Charging Pumps not running are in Auto-After-Stop.

67.
During performance of 2-ES-0.1, the Reactor Operator notes AFW pump 2-FW-P-3A has the following parameters indicated:

- 49 amps on the benchboard meter.
- Red, green and amber lights above the 2-FW-P-3A control switch are NOT lit.
- The breaker indicating light bulbs are verified NOT burned out.
- 2-FW-HCV-200C was reduced to zero demand IAW 2-ES-0.1.
- No unexpected annunciators are lit.

Which ONE of the following identifies the cause of the control switch lights being extinguished?

a) Loss of 2-III DC bus.

b) Breaker closing power is lost.

c) Breaker tripping power is lost.

d) LOCAL-REMOTE switch for 2-FW-P-3A in LOCAL.

K/A: SYS063.A4.01 10CFR: 41.7

Level: Comprehension

Origin: NEW Applicability: Both

References: 12050-ESK-5AA Objective 11965

Correct Answer: c)

Plausible Distractors:

a. Loss of 2-I DC bus would produce these indications; 2-III DC bus provides train "B" control power.

b. Control power fuses do provide breaker position indication, but tripping power fuses, not closing power fuses.

d. Local control of AFW pump would produce these indications, but there would also be an alarm indicating local control.

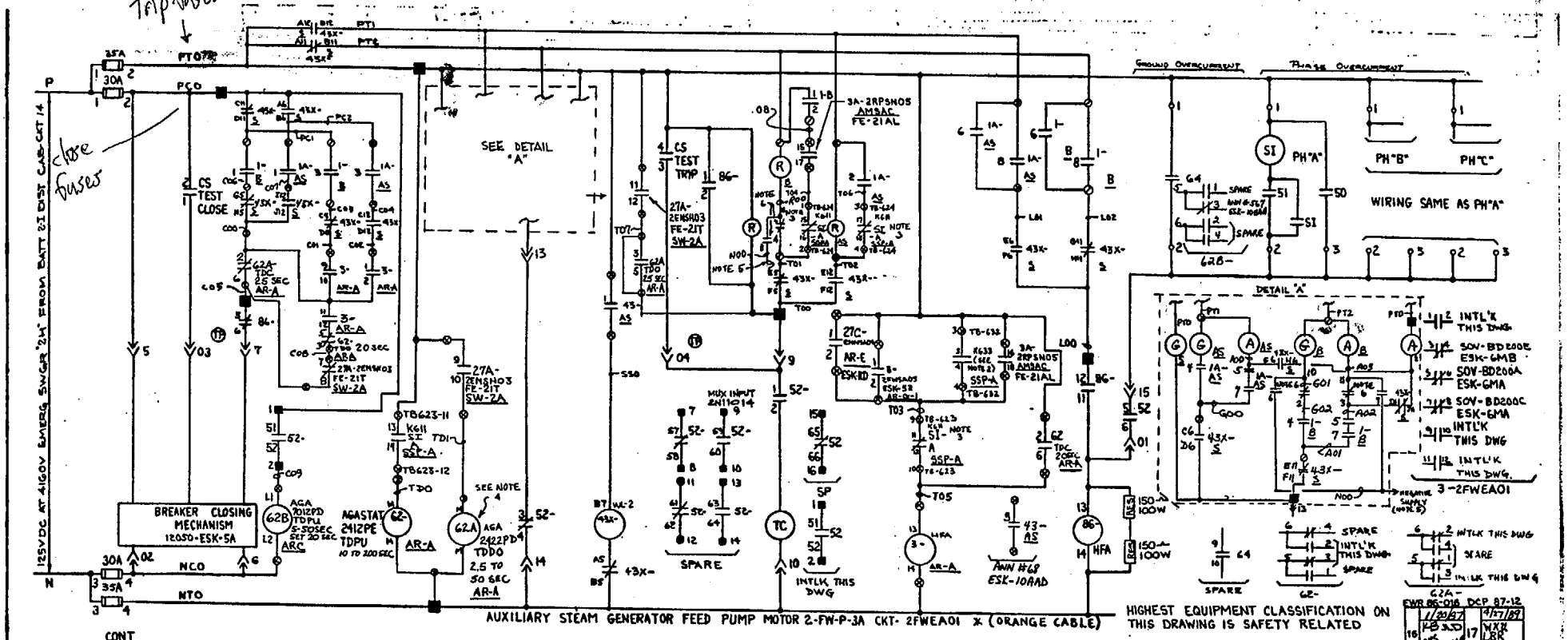

CS	CONT DIAG	ESK
1-	E	3A
1A-	E	3A
43	AT-1	3E

43X- SHOWN RESET
FOR CONTACT DEVELOPMENT SEE ESK-5AL

NOTE:
1. PREFIX ALL WIRES WITH 2FWEA01
2. REF NA-DW-108D744 SH.22
3. REF NA-DW-108D744 SH.21
4. FIELD TO REMOVE INST. CONTACT FROM RELAY 62A-
5. NEGATIVE SUPPLY - SEE ESK-11AH
6. FROM RELAY 3C-2CESAOS, ESK-11AH, LTO

| | | |

AUX FD PP
LOCAL
CONTROL

1.0 Probable Cause
  1.1 Local-Remote selector switch at auxiliary shutdown panel in "LOCAL" position.
2.0 Operator Action
  2.1 Transfer control to Main Control Board by placing local-remote selector switch to the 'REMOTE' position and reset trip/reset switches on pump breaker.
3.0 References
  3.1 11715-FM-17A, 18A
  3.2 11715-ESK-10AAD
4.0 Actuations
  4.1 (43 Device)

68.
A periodic test of 1H EDG is in progress with the diesel in parallel with offsite power. During the test, an earthquake initiates a loss of the switchyard and lockout of all RSSTs, followed a minute later by a large-break LOCA.

Which ONE of the following is correct concerning how QS and AFW pumps will be loaded on 1H emergency bus?

a) "A" QS pump starts after 15-second time delay on CDA; "A" AFW pump starts with no time delay on loss of 2/2 RSSTs.

b) "A" QS pump starts after 15-second time delay on CDA; "A" AFW pump starts after 20-second time delay on SI.

c) "A" QS pump starts with no time delay on CDA; "A" AFW pump starts with no time delay on loss of 2/2 RSSTs.

d) "A" QS pump starts with no time delay on CDA; "A" AFW pump starts after 20-second time delay on SI.

K/A: SYS064.A2.16 10CFR: 41.5, 43.5

Level: Comprehension

Origin: NEW Applicability: Both

References: 1-PT-82H, ESK-5AA, 6K Objective 12019

Correct Answer: c)

Plausible Distractors:

a. QS pump auto-start is normally delayed for 15 seconds following restoration of emergency bus voltage.

b. QS pump auto-start is normally delayed for 15 seconds following restoration of emergency bus voltage; AFW pump auto-start after SI is delayed for 20 seconds.

d. AFW pump auto-start after SI is delayed for 20 seconds.

_____ 4.9 No load operation of the EDG should be minimized. The desired maximum limit is approximately 5 minutes. The unloaded period starts when the EDG reaches 900 RPM. The time limit is intended as a conservative guideline for routine operations used to increase the life of the blower. If the EDG is run unloaded over 5 minutes, the unloaded run time will be noted on the cover sheet and on 1-LOG-12, which is routed to the System Engineer.

_____ 4.10 IF an emergency start signal is received while the EDG is in MAN LOCAL, THEN the EDG will NOT automatically start and load. The Speed Control Vernier should be placed at the high speed stop AND the Diesel Mode Selector switch should be restored to MAN REMOTE or AUTO REMOTE for auto-start capability.

_____ 4.11 WHEN the Diesel Room door is blocked open, THEN the Diesel is considered inoperable, unless the requirements of VPAP-0305 have been met and adequate PRA (Probabilistic Risk Assessment) time is still available. **(Reference 2.4.10)**

_____ 4.12 WHEN the Diesel Room door is blocked open, THEN a Fire Watch, who with Shift Supervisor permission may be assigned concurrent duties, must be stationed in accordance with the requirements of Technical Requirements Manual, TR 7.2.

_____ 4.13 WHEN the EDG is paralleled to the Emergency Bus, Load Shed, and Load Sequencing timers, which are required by Tech Spec, are defeated. The EDG should be declared inoperable in Mode 1 through 4. In Mode 5 or 6, the EDG is considered operable due to the lockout of most ESF equipment and the capability of manual operator action. However the EDG should be declared inoperable in Modes 5 or 6 when the EDG room door is blocked open (See Step 4.11). **(References 2.1.13 and 2.4.10)**

_____ 4.14 IF the EDG fails to start or trips at any time during the performance of this procedure, THEN ensure 0-PT-82.7, Emergency Diesel Generator Failure Record, is completed.

_____ 4.15 WHEN paralleling the EDG with a Bus, THEN the EDG voltage is to be adjusted to 1 to 2 volts higher than the Bus voltage. This slightly higher voltage setting is needed to compensate for the mismatch in the potential transformers. **(Reference 2.4.12)**

_____ 4.16 IF a Fuel Oil Transfer pump is inoperable on the 1J EDG, THEN refer to TRM, TR 9.4.c and TR 9.4.d prior to performing this test.

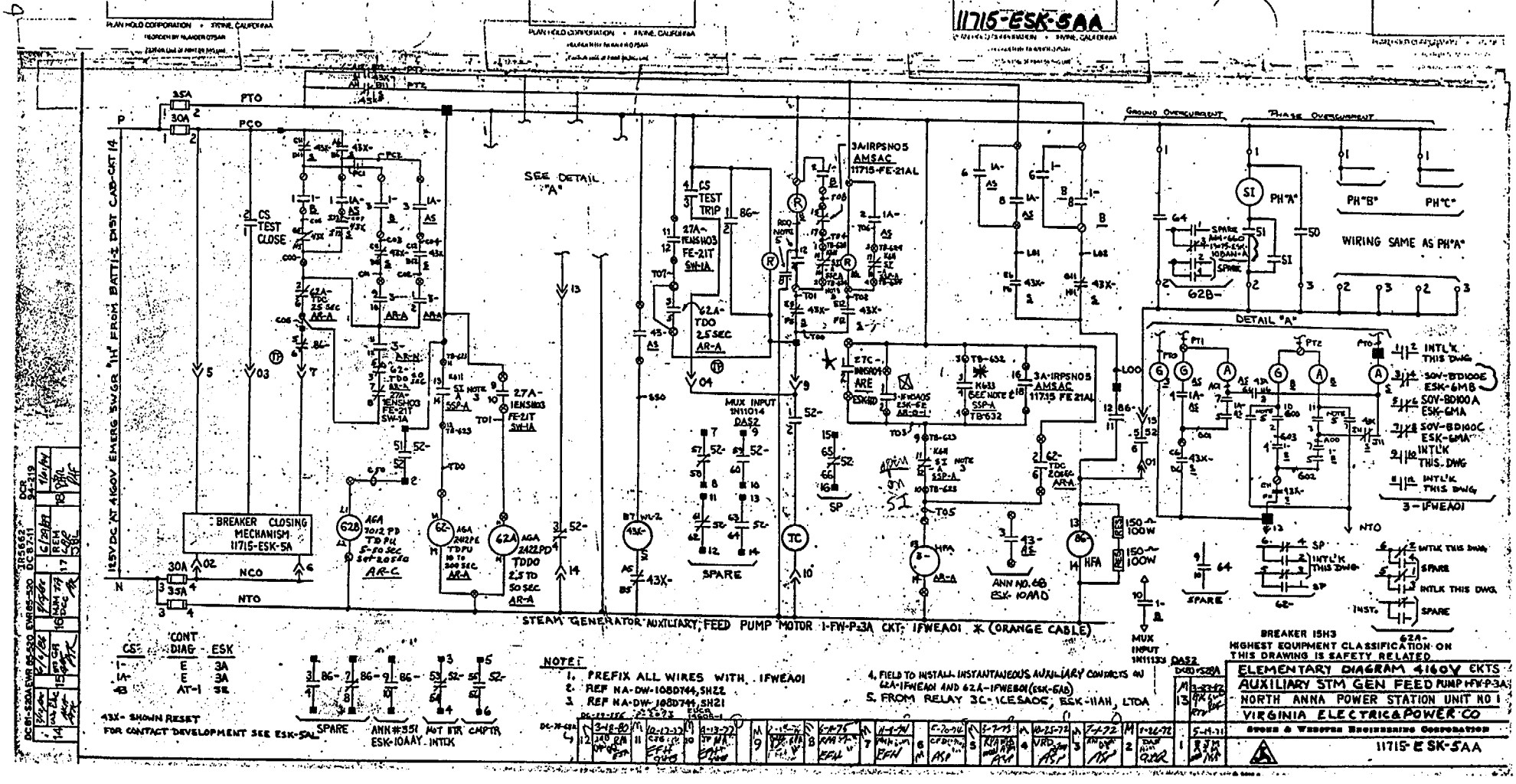

* loss of 2/2 RSSTs

* lo-lo S/G level

⊠ loss of all Main FW

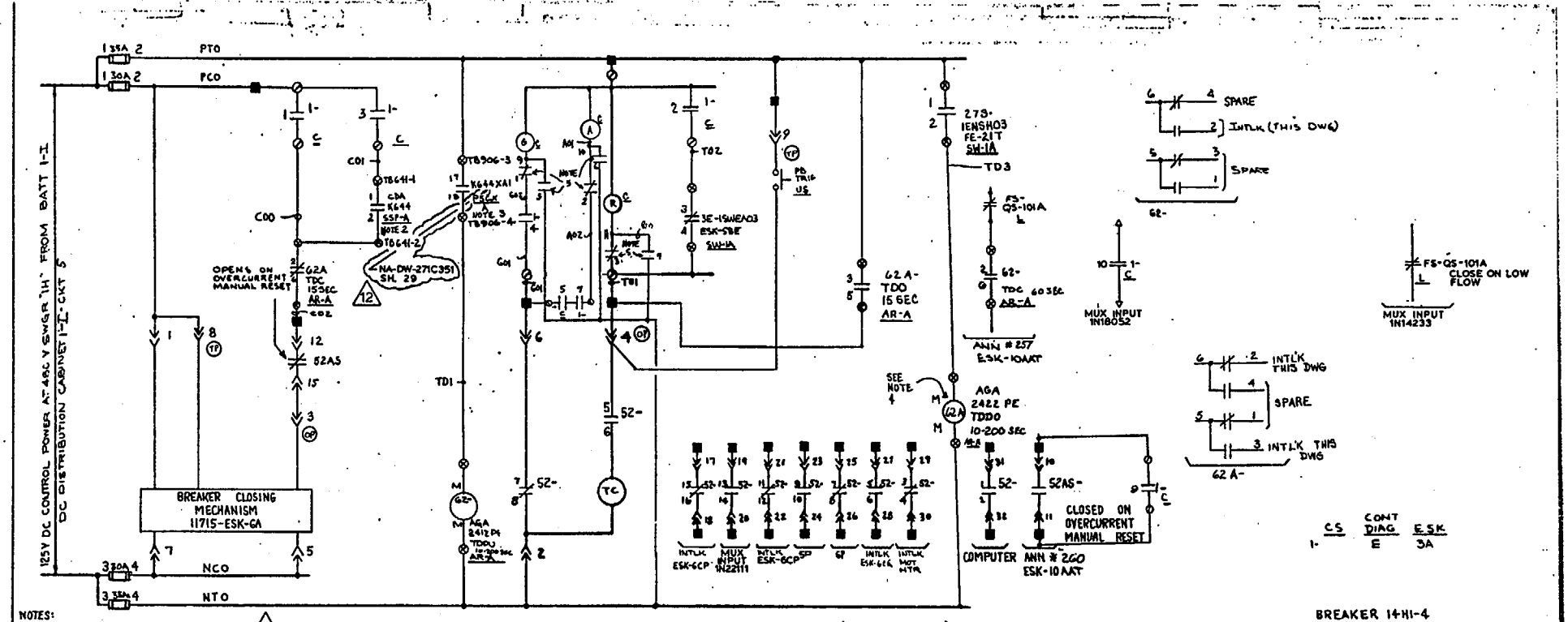

NOTES:
1. PREFIX ALL WIRES WITH 1QSSA01.
2. REFER TO NA-DW-108D744 SH 17-24 FOR ALL K6-- CONTACTS.
3. REFER TO DWG 724ID49 (SIW FILE 1.29) FOR ALL K6--X- CONTACTS
4. FIELD TO ADJUST 62A- TO DROP OUT AT 15 SEC.
5. FROM RELAY 3BA-1CESA05, 11715-ESK-11AN, LTO

| | | |

69.
A 20 foot length of piping filled with radioactive fluid has a dose rate of 4 REM/hr at 3 feet. Which ONE of the following approximates the dose rate at 8 feet?

a) 2 REM/hr

b) .6 REM/hr

c) 2.5 REM/hr

d) 1.5 REM/hr

K/A: SYS073.K5.02 10CFR: 41.5

Level: Analysis

Origin: NEW Applicability: Both

References: ND-81.2-LP-3

Correct Answer: d)

Plausible Distractors:

a. 1/2 of initial, dose rate seems reasonable since distance was approximately doubled.

b. Answer obtained if calculated as a point source.

c. Answer obtained if calculated as a point source and squaring the dose rate.

b. Line Sources - Not all sources are small enough to be point sources. Considerations must be made for other types of sources such as pipes, tanks and etc. so that actions can be taken for adequate radiation protection. The other type of radiation source to be considered is a line source.

For a line source, the radiation decreases inversely as the distance from the source increases. The equation for a line source is very similar to the point source equation:

Write the following equation on the chalkboard and explain the terms as necessary:

$$I_1(D_1) = I_2(D_2)$$

Direct the trainees to work the following problem:

If a 20 foot pipe filled with radioactive material reads 4.0 Rem/hr at 3 feet, what is the dose rate at a distance of 8.0 feet away?

Answer: $I_2 = \frac{I_1 D_1}{D_2} = \frac{(4R/hr)(3ft)}{(8ft)} = 1.5 Rem/hr$

Note that the direct linear relationship is accurate out to a distance of 0.5 times the source length. This point is called the "transition point" or the L/2 point. It is at this place that the point source equation is used to calculate dose rates for any distances further away.

70.
The following conditions exist on unit 1:

- Unit is at 100% power.
- Annunciators D-F8/D-G8, Cond Tube Clean Pit Hi /Hi-Hi Level alarms actuate.
- The Turbine Building operator reports flooding in the basement.
- Annunciator D-G7, Turb Bldg Flood Alarm Trouble actuates.

Which ONE of the following is correct concerning the plant response to these conditions?

a) All CW pumps trip; turbine trips due to loss of condenser vacuum.

b) Turbine flooding signal will trip the turbine directly and also trips all CW pumps.

c) Turbine flooding signal only actuates the alarm; operator action is required to trip CW pumps and turbine.

d) Turbine flooding signal will trip the reactor directly and also trips all CW pumps.

K/A: SYS075.K3.07 10CFR: 41.7

Level: Knowledge

Origin: NEW Applicability: Both

References: 1-AR-D-G7; 0-AP-39.1 Objective 11424

Correct Answer: a)

Plausible Distractors:

b) Turbine flooding automatic actions have been misunderstood in the past.

c) Turbine flooding automatic actions have been misunderstood in the past.

d) Turbine flooding AP requires operator to trip the reactor.

TURB BLDG FLOOD ALARM TROUBLE

2/3 level switches
for circuit A or B
> 12" above floor

1.0 Probable Cause
  1.1 Flooding from Circulating Water System
2.0 Operator Action
  2.1 Verify the following valves are closed:
    * 1-CW-MOV-100A, 1A Circulating Water Pump Discharge Isol Valve
    * 1-CW-MOV-100B, 1B Circulating Water Pump Discharge Isol Valve
    * 1-CW-MOV-100C, 1C Circulating Water Pump Discharge Isol Valve
    * 1-CW-MOV-100D, 1D Circulating Water Pump Discharge Isol Valve
  2.2 Verify the following pumps have stopped:
    * 1-CW-P-1A, 1A Circulating Water Pump
    * 1-CW-P-1B, 1B Circulating Water Pump
    * 1-CW-P-1C, 1C Circulating Water Pump
    * 1-CW-P-1D, 1D Circulating Water Pump
  2.3 IF at power, THEN GO TO 1-E-0, Reactor Trip or Safety Injection.
3.0 References
  3.1 11715-LSK-2-1, 34-9
  3.2 11715-ESK-10D, 10AAV
  3.3 Instrument Loops 11715-CW-039 through 044
  3.4 1-E-0, Reactor Trip or Safety Injection
4.0 Actuation
  4.1 1-CW-LS-106A-1
  4.2 1-CW-LS-106A-2
  4.3 1-CW-LS-106A-3
  4.4 1-CW-LS-106B-1
  4.5 1-CW-LS-106B-2
  4.6 1-CW-LS-106B-3

-END-

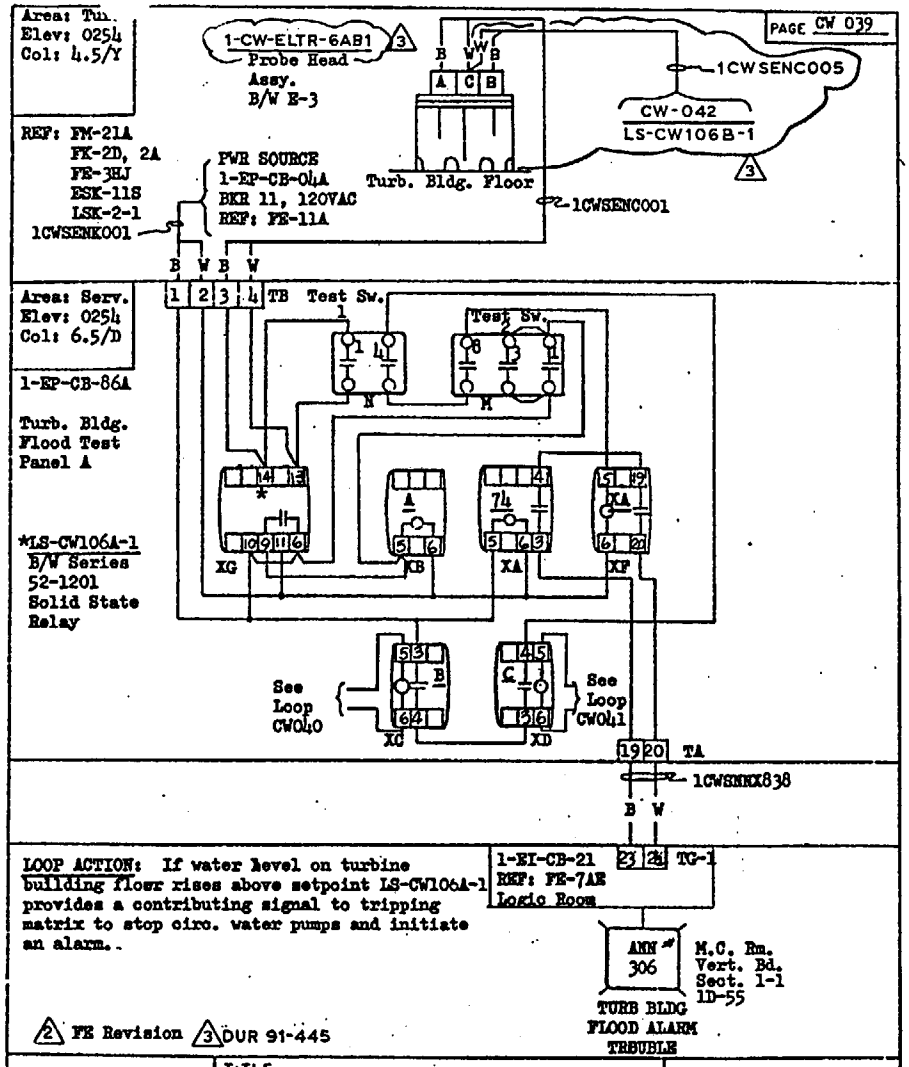
Area: Tu.
Elev: 0254
Col: 4.5/Y
1-CW-ELTR-6AB1
Probe Head
Assy.
B/W E-3
PAGE CW 039
1CWSENC005
CW-042
LS-CW106B-1
REF: FM-21A
FK-2D, 2A
FE-3HJ
ESK-11S
LSK-2-1
1CWSENK001
PWR SOURCE
1-EP-CB-04A
BKR 11, 120VAC
REF: FE-11A
Turb. Bldg. Floor
1CWSENC001
Area: Serv.
Elev: 0254
Col: 6.5/D
TB
Test Sw.
1-EP-CB-86A
Turb. Bldg.
Flood Test
Panel A
*LS-CW106A-1
B/W Series
52-1201
Solid State
Relay
XG
XB
XA
XF
See
Loop
CW040
See
Loop
CW041
XC
XD
TA
1CWSNNX838
LOOP ACTION: If water level on turbine building floor rises above setpoint LS-CW106A-1 provides a contributing signal to tripping matrix to stop circ. water pumps and initiate an alarm.
1-EI-CB-21
REF: FE-7AE
Logic Room
TG-1
ANN
306
M.C. Rm.
Vert. Bd.
Sect. 1-1
1D-55
TURB BLDG
FLOOD ALARM
TROUBLE
FE Revision
DUR 91-445
TITLE
CIRCULATING WATER SYSTEM
TURBINE BUILDING FLOOR
FLOODING TRIPS
PROJECT NAPS No. 1
J.O. NO 11715
NUMBER L-CW106A-1
PREPARED
CHECKED
APPROVED
REVISIONS BY
DATE
THIS DRAWING SUPERSEDES REV 2 ORIGINAL

STEP	ACTION/EXPECTED RESPONSE	RESPONSE NOT OBTAINED

* *

CAUTION: Auxiliary Building flooding could carry over into the Turbine Building through the Service Water Tunnel into the Turbine Building Valve Pit.

* *

NOTE: If a Reactor trip occurs, then, in order to recover the plant from the flooding, this procedure should be performed in conjunction with Emergency Operating Procedures.

1. __IDENTIFY SOURCE OF FLOODING

2. __DETERMINE IF REACTOR SHOULD BE TRIPPED:

a) Check if any of the following conditions exists: • Circulating Water System rupture • Condensate System rupture • Feedwater System rupture • Bearing Cooling System rupture • Annunciator "D" Panel G-7, TURB BLD FLOOD ALARM TROUBLE, is LIT with Turbine Building basement flooded to greater than 1 foot	a) GO TO Step 3.
b) Trip Reactor	
c) Initiate appropriate procedure while continuing with this procedure: • 1-E-0, REACTOR TRIP OR SAFETY INJECTION • 2-E-0, REACTOR TRIP OR SAFETY INJECTION	

71.
The following conditions exist:

- 1-SA-C-1 was running in HAND.
- 2-SA-C-1 was started in HAND to allow placing 1-SA-C-1 in standby.
- The Operator at the Controls depressed the 1-SA-C-1 AUTO button, then depressed the OFF button associated with the HAND button.
- Service air pressure is unchanged at 115 psig.

Which ONE of the following is correct concerning the resulting operation of 1-SA-C-1?

a) Compressor will unload approximately 20 minutes after the OFF button is depressed and will run indefinitely.

b) Compressor will unload immediately and stop approximately 20 minutes after the OFF button is depressed.

c) Compressor will unload and stop immediately after the OFF button is depressed.

d) Compressor will unload immediately after the OFF button is depressed and will run indefinitely.

K/A: SYS079.K4.01 10CFR: 41.7

Level: Knowledge

Origin: NEW Applicability: Both

References: NCRODP-92.10-LP-3, 1-OP-46.2 Objective 4229

Correct Answer: b)

Plausible Distractors:

a. Compressor **stops** appx 20 minutes after OFF button depressed.

c. Compressor **unloads** immediately after OFF button depressed.

d. Compressor unloads immediately, but will not run indefinitely.

1. Service Air Compressors 1/2-SA-C-1 [Atlas-Copco]

   a. General

      (1) [Screw type, positive displacement, two stage, oil free]

      (2) 109 psig, 660 SCFM]

      (3) [Screws are synchronized by timing gears and do not touch]

      (4) Oil cooled compressor jackets

      (5) Air cooled inter, after, and oil coolers

      (6) Internal Safety Valves [3.7/93 bar 53.6/135 psig]

   b. Normal Lineup

      (1) Powered from Station Service 480V Busses

      (2) Breaker must be closed locally in 307 SWGR room.

      (3) Controlled from vertical board (auto/hand/off)

      (4) Normally one running, one in standby

   c. Inter (Ci) and after (Ca) coolers

      (1) Compressed air through tubes, cooling air across tubes

(2) Have automatic moisture drains

(a) drains and heat traced to gravel filled drain pit

d. Operation

(1) Unit operates fully loaded or fully unloaded, no in between

(2) Butterfly valve on suction shuts to unload unit

(3) If unloaded for >15 minutes in auto, unit automatically shuts down. Will restart if discharge pressure drops below setpoint

(4) "Load/unload" switch on front. In "unload" will unload the compressor regardless of a system pressure

e. Alarms and Shutdowns

(1) Loss of power - will auto restart if "Loss of Power Auto Reset" is selected on Front Panel. Otherwise must manually restart

(2) LP air outlet Hi temp - Trips compressor, Annunciator [229°C/445°F]

(3) HP air inlet Hi temp - Trips compressor, Annunciator [90°C/194°F]

(4) HP air outlet Hi temp - Trips compressor, Annunciator [229°C/445°F]

(5) Oil pressure Lo - Trips compressor, Annunciator [1.4 bar 20

21

VIRGINIA POWER **NORTH ANNA POWER STATION**	PROCEDURE NO: **1-OP-46.2**	
	UNIT NO: **1**	REVISION NO: **13-P1**
PROCEDURE TYPE: **OPERATING**	EFFECTIVE DATE:	EXPIRATION DATE: **N/A**

PROCEDURE TITLE:

OPERATION OF 1-SA-C-1, SERVICE AIR COMPRESSOR

REVISION SUMMARY:

- Revised to incorporate DCP 97-800, Service Air Compressor HP/LP Outlet Temperature Trips adding Reference 2.3.11 and changing Step 4.3 Air Temperature LP and HP Outlet to 445° F. Changed the Auxiliary Cooling Fan start temperature to 220° C in Steps 4.7, 5.1.4.a and 5.2.9.a.1.
- **E-PAR {P1} Updated cover sheet. Added Purpose Step 1.3 and Sections 5.4, 5.5, and 5.6 to direct installing, operating, and removing a Service Air Temporary Compressor connected to the Service Air System at the temporary connection by the installed Service Air Compressors outside Unit 2 Truck Bay.**

Writer: Joe Goerge	**Reviewer:** Rick Parker

ELECTRONIC DISTRIBUTION — APPROVAL ON FILE

PROBLEMS ENCOUNTERED: ☐ Yes ☐ No **NOTE:** If yes, note problems in Remarks.

REMARKS:

(use back for additional space)

SHIFT SUPERVISOR:	DATE:

1.0 PURPOSE

1.1 To provide instructions for placing 1-SA-C-1, Service Air Compressor, in service.

1.2 To provide instructions for removing 1-SA-C-1, Service Air Compressor, from service.

1.3 {P1} To provide instructions for installing, operating, and removing a Service Air Temporary Compressor.

2.0 REFERENCES

2.1 Source Documents

None

2.2 Technical Specifications

None

2.3 Technical References

2.3.1 Atlas Copco Tech Manual for ZT3B Series

2.3.2 1-AR-24, Service Air Compressor – Local

2.3.3 0-OP-26.10, 480 Volt Breaker Operation

2.3.4 DCP 89-04B, Service and Instrument Air System Upgrade

2.3.5 Hankison Instruction Manual for Aftercooler

2.3.6 2-OP-46.2, Operation of 2-SA-C-1, Service Air Compressor and 2-SA-ACLR-1, Service Air Aftercooler

2.3.7 DCP 93-119, Installation of Service Air Compressor Auxiliary Fan

2.3.8 Memo from C. Dodds to D. Critchfield, dated 10-5-92, concerning operation of Service Air Compressor door louvers.

2.3.9 Memo from B. A. Alcorn to James W. Crossman, dated 10-24-95, concerning change of temperature requirement for Auxiliary Cooling Fan operation.

2.3.10 Memo from B. A. Alcorn to N. L. Lane, dated 06-17-96, concerning Service Air Compressor Operation (included with Rev 12 or Rev 11-P4)

2.3.11 DCP 97-800, Service Air Compressor HP/LP Outlet Temperature Trips

2.3.12 **{P1} 98-SE-PROC-41, for installation of temporary Service Air compressors. (Revision 13-P1).**

2.4 **Commitment Documents**

None

3.0 INITIAL CONDITIONS

None

4.0 PRECAUTIONS AND LIMITATIONS

4.1 Comply with the following guidelines when marking steps N/A:

- IF the conditional requirements of a step do not require the action to be performed, THEN mark the step N/A.
- IF any other step is marked N/A, THEN have the Shift Supervisor (or designee) approve the N/A and justify the N/A on the Procedure Cover Sheet.

4.2 IF the compressor loses electrical power, THEN, when power is restored, the compressor lockouts must be reset locally.

4.3 The compressor will trip because of any of the following:

- Motor Overload (compressor or cooling fan)
- Low Oil Pressure (20 psig)
- High Oil Temperature (175° F)
- Air Temperature LP Outlet (445° F)
- Air Temperature HP Inlet (190° F)
- Air Temperature HP Outlet (445° F)

4.4 IF the compressor is running in AUTO, THEN the compressor will load and unload at pressures listed on metal tag attached to 1-SA-PS-111A, inside the compressor cabinet.

4.5 IF the compressor is running in HAND, THEN the compressor will load and unload at pressures listed on metal tag attached to 1-SA-PS-111B, inside the compressor cabinet.

4.6 IF both Service Air Compressors are secured, THEN the Aftercooler fan motors should be turned off.

4.7 IF 1-SA-TIS-101, Outlet Air Temperature increases to 220°C, THEN ensure the Auxiliary Cooling Fan Disconnect Switch, located on the side of the Compressor Cabinet, is ON.

Init Verif

5.0 INSTRUCTIONS

5.1 Starting 1-SA-C-1, Service Air Compressor, when compressor was in Auto/Standby

_____ 5.1.1 Review Precautions and Limitations.

_____ 5.1.2 Verify power available to 1-SA-C-1. IF power is NOT available, THEN GO TO Section 5.2.

_____ 5.1.3 Start the compressor by pushing the HAND button for 1-SA-C-1 located on the J Train Safeguards Panel.

5.1.4 Monitor 1-SA-TIS-101, Service Air Cprsr Outlet LP Air Temp Indr Switch, periodically for a 1 hour time period and do the following for Auxiliary Cooling Fan operation:

_____ a. IF the LP Air Temp Indr increases to 220°C, THEN ensure the Auxiliary Fan For 1-SA-C-1 DISCONNECT Switch, located on the side of the Compressor Cabinet, is ON.

_____ b. IF the Auxiliary Cooling Fan is running, THEN observe for proper operation by verifying the exhaust shutters open with adequate fan flow.

Completed: _____ Date: _____

5.3 Removing 1-SA-C-1, Service Air Compressor, from Service

_____ 5.3.1 Review Precautions and Limitations.

_____ 5.3.2 Verify enough air systems are available before removing 1-SA-C-1 from service.

5.3.3 Do one of the following. Mark N/A the steps not used.

_____ a. Remove 1-SA-C-1 from service by pushing the OFF buttons located on the J Train Safeguards Panel.

_____ b. IF it is desired to place 1-SA-C-1 in Auto/Standby, THEN do the following at the 1-SA-C-1 control switch in the Control Room:

1. Push the AUTO button

2. Push the OFF button associated with the HAND control button.

5.3.4 IF the compressor was placed in AUTO AND Service Air is at least 110 psig , THEN do the following:

_____ a. After approximately 20 minutes, verify that the AUTO OPERATION annunciator lights and the compressor stops.

NOTE: The Auxiliary Fan should be operated in accordance with 2-LOG-6C, Unit 2 Turbine Building Log, should the Compressor auto start.

_____ b. IF compressor stops, THEN place the Auxiliary Fan For 1-SA-C-1 DISCONNECT Switch, located on the side of the Compressor Cabinet, in OFF.

_____ 5.3.5 IF the compressor was placed in OFF, THEN place the Auxiliary Cooling Fan Disconnect Switch, located on the side of the Compressor Cabinet, in the OFF position.

5.3.6 IF BOTH Service Air Compressors are removed from service, THEN do one of the following:

_____ a. Remove 2-SA-ACLR-1, Service Air Aftercooler, from service using 2-OP-46.2.

_____ b. Place 2-SA-M-1A And 1B, Aftercooler Fan Motor control switch to OFF.

Completed: _____ Date: _____

72.
Which ONE of the following conditions would initiate a start of diesel-driven fire pump, 1-FP-P-2?

a) 1-FP-P-2 control switch placed in TEST.

b) Fire main pressure drops to 85 psig with 1-FP-P-2 control switch in AUTO.

c) The lube oil conditioner deluge valve opens during testing with the deluge manually isolated.

d) Breaker 25H8, 4160V-480V transformer feeder, opens with 1-FP-P-2 control switch in AUTO.

K/A: SYS086.A3.01 10CFR: 41.7

Level: Knowledge

Origin: NEW Applicability: Both

References: NCRODP-6-LP-1 Objective 6633

Correct Answer: a)

Plausible Distractors:

b. This is an auto start signal for the motor-driven fire pump.

c. Deluge valve actuation will cause an alarm, but does not send an auto-start signal.

d. A loss of control power will cause an auto start. However, the 2H bus is not the power supply (actually 1H bus).

EE. Diesel-driven fire pump 1-FP-P-2. [6633]

1. The diesel-driven fire pump 1-FP-P-2 takes a suction from unit one "A" service water bay.

2. Conditions that will cause the pump to start or trip automatically

   a. The diesel-driven pump starts in the AUTO mode if there is a loss of AC control power or main fire loop pressure drops to 52 psig as sensed by PS-FP-1203.

   b. The diesel-driven fire pump automatically stops on overspeed (approx. 1900 rpm) or low oil pressure (12 psig).

3. The diesel driven fire pump can be started from the main control room unit 1 benchboard or the service water pumphouse.

   a. The pump can be secured only from the service water pump house.

4. Indications available to the control room operator that the pump has started

   a. DIESEL DRIVEN FIRE PP AUTO START annunciator (D-D6).

5. The rated discharge flow of the diesel driven fire pump is 2500 gpm.

6. The diesel driven fire pump's relief valve setpoint is 166 psig.

FF. Low-level alarm setpoint for the diesel-driven fire pump 1-FP-P-2 fuel oil tank. [6642]

1. The low-level alarm setpoint for the diesel-driven fire pump 1-FP-P-2 fuel oil tank is 25% of tank level.

DD. Information associated with motor-driven fire pump 1-FP-P-1. [6631]

1. The power supply to the motor-driven fire pump 1-FP-P-1 is the 4160 volt "1G" bus.

2. The Intake structure circulating water bay from which the motor driven fire pump takes a suction is unit 1 "B" bay.

3. Conditions that will cause the pump to start or trip automatically

   a. If the motor driven fire pump control switch is in AUTO and main fire loop pressure is less than 90 psig as sensed by pressure switch PS-FP-1202, the pump will start automatically.

   b. The pump will trip on an 86 lockout.

4. The motor driven fire pump can be started at the unit one main control board or in the motor driven fire pump house at the intake structure.

   a. The pump can only be stopped at the intake structure.

5. Indications available to the control room operator that a pump has started

   a. Control room annunciator 1D-C6, MOTOR FIRE PP RUNNING.

6. The rated discharge flow of the motor driven fire pump is 2500 gpm.

7. The relief valve setpoint for the motor driven fire pump is 164 psig.

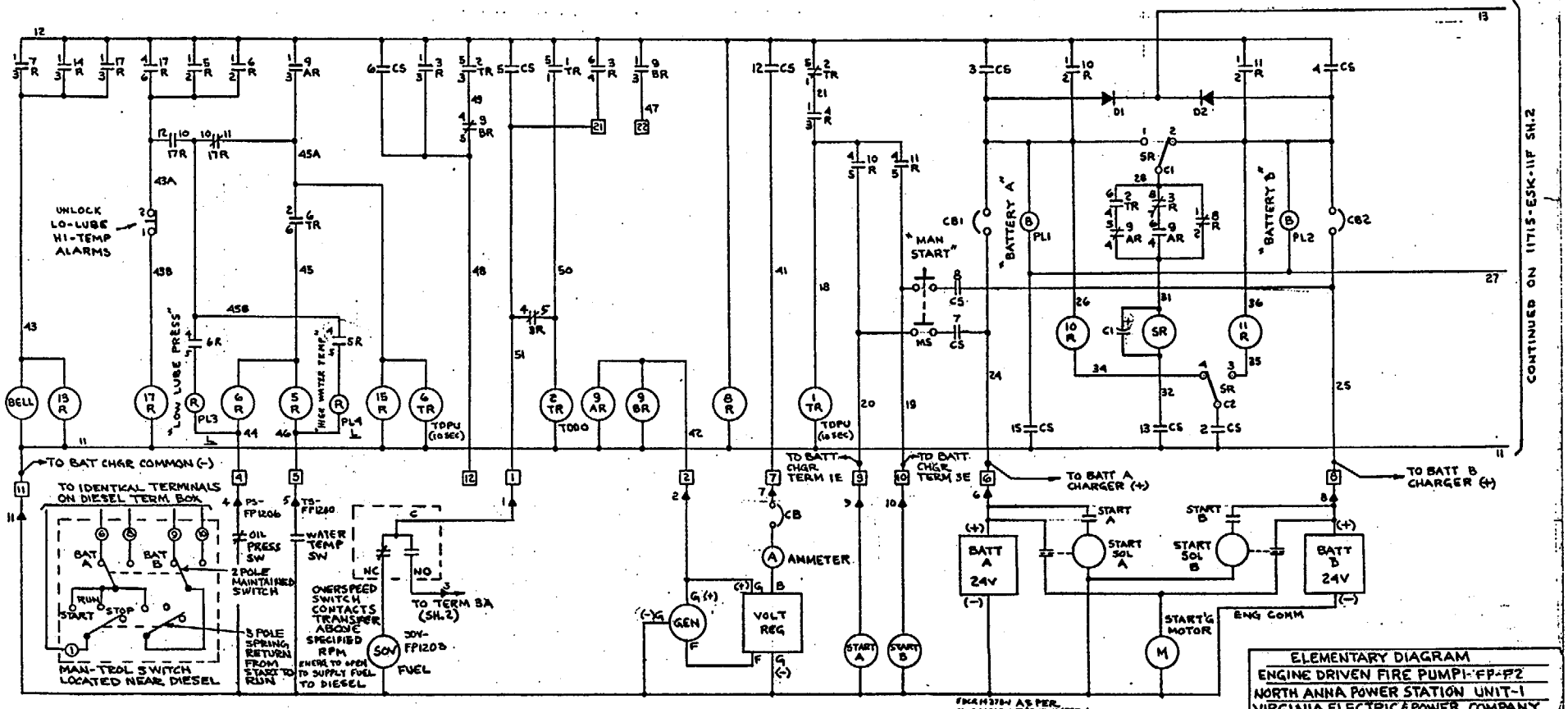

DIESEL DRIVEN FIRE PUMP1-FP-P2 CKT 1FPPN02
FOR NOTES AND REFERENCES SEE SH.2

ELEMENTARY DIAGRAM
ENGINE DRIVEN FIRE PUMP1-FP-P2
NORTH ANNA POWER STATION UNIT-1
VIRGINIA ELECTRIC & POWER COMPANY
STONE & WEBSTER ENGINEERING CORPORATION

11715-ESK-11F SH.1

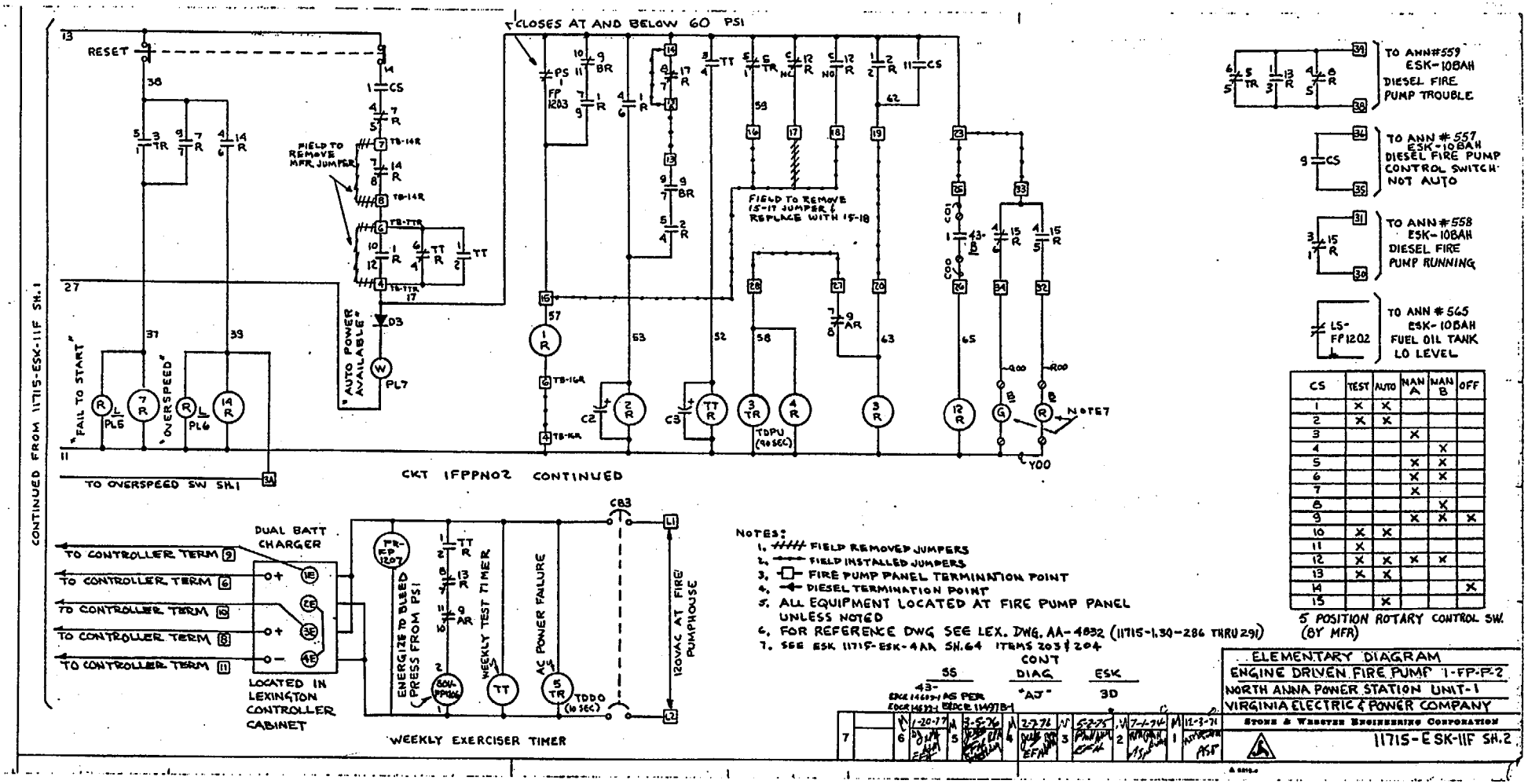

CS	TEST	AUTO	MAN A	MAN B	OFF
1	X	X			
2	X	X			
3			X		
4				X	
5			X	X	
6			X	X	
7			X		
8				X	
9			X	X	X
10	X	X			
11	X				
12	X	X	X	X	
13	X	X			
14					X
15		X			

5 POSITION ROTARY CONTROL SW. (BY MFR)

NOTES:
1. ////// FIELD REMOVED JUMPERS
2. ——— FIELD INSTALLED JUMPERS
3. -□- FIRE PUMP PANEL TERMINATION POINT
4. -◄- DIESEL TERMINATION POINT
5. ALL EQUIPMENT LOCATED AT FIRE PUMP PANEL UNLESS NOTED
6. FOR REFERENCE DWG SEE LEX. DWG. AA-4832 (11715-1.30-286 THRU 291)
7. SEE ESK 1171F-ESK-4AA SH.64 ITEMS 203 & 204

SS 43- EDCR 146591 AS PER EDCR 146591-1 EDCR 1149718-1
CONT DIAG "AJ"
ESK 3D

7		6	1-20-77	5	5-5-76	4	2-2-76	3	5-23-75	2	7-1-74	1	12-3-74				

ELEMENTARY DIAGRAM
ENGINE DRIVEN FIRE PUMP 1-FP-P-2
NORTH ANNA POWER STATION UNIT-1
VIRGINIA ELECTRIC & POWER COMPANY
STONE & WEBSTER ENGINEERING CORPORATION
11715-ESK-11F SH.2

VIRGINIA POWER

NORTH ANNA POWER STATION

PROCEDURE NO:	0-PT-100.1.2
UNIT NO:	1 AND 2
REVISION:	9
PROCEDURE TYPE:	PERIODIC TEST
DEPARTMENT:	OPERATIONS
EFFECTIVE DATE:	
EXPIRATION DATE:	N/A

PROCEDURE TITLE:

DIESEL-DRIVEN FIRE PROTECTION PUMP 1-FP-P-2 EXERCISE

TEST FREQUENCY:	UNIT CONDITIONS REQUIRING TEST:
At least once every 31 days	Modes 1, 2, 3, 4, 5, and 6

SPECIAL CONDITIONS: This PT is staggered with 1-PT-100.1.1.

SURV REQ	APP R					PMT

REVISION SUMMARY:

- Updated the cover page.
- Incorporated MIS 98-0008 by adding PMT to the last space on the review bar on the coverpage.

Writer: James Harrington **Reviewer:** Chrissy Almond

ELECTRONIC DISTRIBUTION — APPROVAL ON FILE

REASON FOR TEST (CHECK APPROPRIATE BOX):

☐ Surveillance ☐ Post-Maintenance Work Order Number (Post-Maintenance Only): _____

TEST PERFORMED BY (SIGNATURE):	DATE STARTED:	DATE COMPLETED:
TEST RESULT (CHECK APPROPRIATE BOX): ☐ Sat ☐ Unsat ☐ Partial	WORK REQUEST NUMBERS AND DATE:	

THE FOLLOWING PROBLEM(S) WERE ENCOUNTERED AND CORRECTIVE ACTIONS TAKEN:

_____

_____

_____

_____

_____ *(use back for additional space)*

COGNIZANT SUPERVISOR OR DESIGNEE:	DATE:
ADDITIONAL REVIEWS: PTSS Coordinator Supervisor-Station Safety & Loss Prevention	DATE:

6.0 INSTRUCTIONS

_____ 6.1 Visually inspect the fire system components and piping on the operating level of the Service Water Reservoir Pumphouse. Record any unusual leaks, obstructions, or debris on the cover sheet.

6.2 Verify the following:

_____ 6.2.1 Water is available to the suction of 1-FP-P-2, Diesel Driven Fire Protection Pump.

_____ 6.2.2 The engine lube oil level is between the high and low marks on the dipstick.

_____ 6.2.3 The engine coolant level is approximately 2 to 3 inches below top filler neck.

_____ 6.3 Notify the SRO to enter the Action of TRM 7.1.1 while the pump is isolated from the Main Fire Loop.

_____ 6.4 Close 1-FP-20, Diesel Driven Fire Pump Discharge Isolation Valve.

_____ 6.5 At control panel for 1-FP-P-2, Diesel Driven Fire Protection Pump, verify that the control switch is in AUTO.

NOTE: Placing the control switch in TEST causes 1-FP-SOV-1206, to open.

_____ 6.6 Place the control switch for 1-FP-P-2, Diesel Driven Fire Protection Pump in TEST.

_____ 6.7 Verify 1-FP-P-2, Diesel Driven Fire Protection Pump starts.

_____ 6.8 Verify 1-FP-RV-1203-2, Diesel Driven Fire Prot Pump Disch Relief Valve is relieving pressure.

_____ 6.9 Verify Unit 1 "D" Panel D-6, DIESEL FIRE PP AUTO START, is LIT.

DIESEL FIRE
PP
AUTO START

1.0 Probable Cause
- 1.1 Pump mode control selector switch in "AUTO" and one of the following conditions exists:
  - 1.1.1 Fire main pressure < 52 psig
  - 1.1.2 Loss of AC control power
  - 1.1.3 Weekly start signal
- 1.2 Pump mode control switch placed in "ON" or "TEST"
- 1.3 Pump mode control switch in " MANUAL A" or "MANUAL B" and the start pushbutton depressed
- 1.4 Seismic Start control switch placed in "START"

2.0 Operator Action
- 2.1 IF actual fire, THEN GO TO 0-FCA-0, Fire Protection - Operations Response.
- 2.2 IF start was due to loss of AC control power, THEN determine cause of loss of control power.

3.0 References
- 3.1 11715-ESK-10D, 10BAH, 11F
- 3.2 11715-FB-41A
- 3.3 0-FCA-0, Fire Protection - Operations Response

4.0 Actuation
- 4.1 CS-1FPPN02, control switch
- 4.2 Device 5TR, loss of AC control power
- 4.3 Device TT, weekly start signal
- 4.4 1-FP-PS-1203, fire main pressure
- 4.5 1PB, start pushbutton

-END-

BUS/MCC MARK NO.: 1-EP -MCC -1H1-3 DESCRIPTION: 1-EP-MC-32

LOCATION: SERVICE WATER PUMP HOUSE REFERENCE: 11715-FE-1T

POWER SUPPLY: 1-EP-480-1H 14H-5

BREAKER NO.	MARK NUMBER	DESCRIPTION
A1	1-HV -F -49A	SWPH EXHAUST FAN
A2	- - -	SPARE (DCP-86-15)
A3	1-EP -MC -50	
	1-EP -MCC -1H1-3A	SERVICE WATER VALVE HOUSE MCC
A4	1-SW -P -3A	SWPH SUMP PUMP
B1	1-SW -S -1A	TRAVELING SCREEN
B2L	- - -	480 V WELDING RECP #17
B2R	1-EP -PNL -1SWP1	LTG XFMR 1-SWP-1 TRANS 33
	1-ELT-B -SW1	EMERGENCY LIGHTING
	1-ELT-B -SW2	EMERGENCY LIGHTING
	1-ELT-B -SW3	EMERGENCY LIGHTING
	1-ELT-B -SW4	EMERGENCY LIGHTING
	1-ELT-B -SW5	EMERGENCY LIGHTING
B3L	1-EP -CB -70	1-FP-P-2 CONTROL CABINET
	1-FP -P -2	CONTROL CABINET
B3R	1-MH -CR -29	TRASH BASKET HOIST
B4	1-SW -P -2	SCREEN WASH PUMP
C1	- - -	SPARE (EWR 85-550)
C2L	1-HV -UH -15A	SWPH HEATER
C2R	1-HV -UH -36A	SWPH HEATER
C3L	1-EP -CB -79	120V DIST PANEL TRANS 49
C3R	1-EP -CB -84H	MTR HTR FUSE PNL 1-EP-CB-84H: FOR
	1-SW -P -1A	1-SW-P-1A
	1-SW -P -1B	1-SW-P-1B
	2-SW -P -1A	2-SW-P-1A
	2-SW -P -1B	2-SW-P-1B
		TRANS 66
C4	- - -	SPARE (DCP 85-48)
D1	1-SW -C -1A	SWPH AIR COMP
D2L	1-HV -UH -15C	SWPH HEATER
D2R	1-SW -S -3	SCREEN WASH STRAINER
D3	- - -	SPARE (EWR 85-550)
D4	- - -	SPARE (DCP 85-48)

73.
During solid plant conditions with RHR in service, containment instrument air is lost due to inadvertent closing of 1-IA TV-102A. Which ONE of the following identifies the RCS response?

a) Pressure increases, temperature decreases.

b) Pressure increases, temperature increases.

c) Pressure decreases, temperature decreases.

d) Pressure decreases, temperature increases.

K/A: SYS005.K3.01 10CFR: 41.7

Level: Comprehension.

Origin: NEW Applicability: BOTH

References: 1-AP-28, RHR drawing Objective 12506

Correct Answer: a)

Plausible Distractors:

b. Temperature actually decreases due to full RHR flow. (RH-FCV-1605 fails closed, RH-HCV-1758 fails open)

c. Pressure actually increases due to a loss of letdown. (RH-HCV-1142 fails closed)

d. Pressure actually increases due to a loss of letdown. (RH-HCV-1142 fails closed)

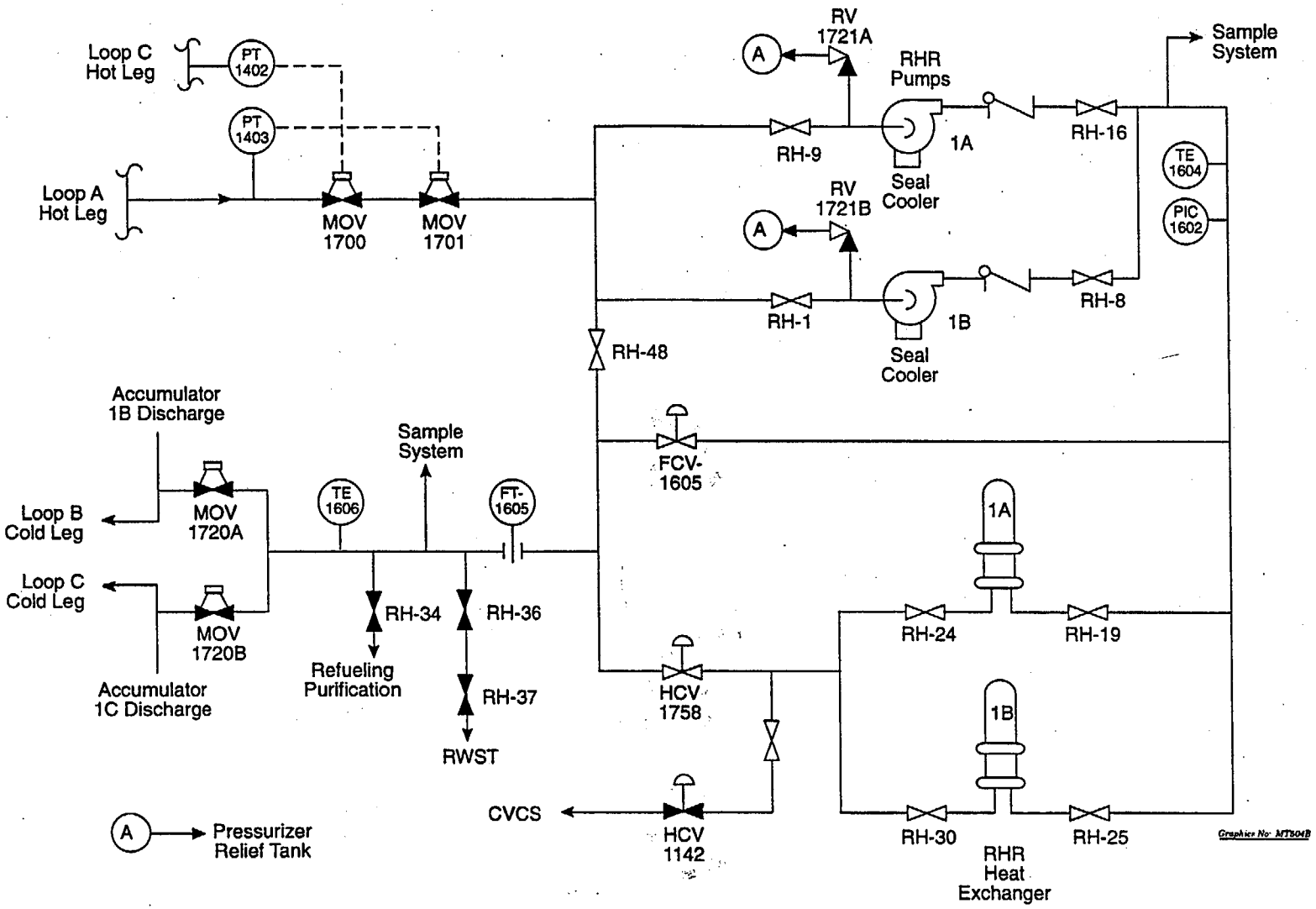

FIGURE 40-1 NA
RESIDUAL HEAT
REMOVAL SYSTEM
03 - 26 - 96

NOTE: The following valves in Containment will close on loss of air.

1-CC-TV-106A, B, & C	CC to RCP A, B, & C
1-CC-TV-116A, B, & C	CC from Thermal Barrier A, B, & C
1-NS-LCV-101	CC makeup to NS System
1-CC-TV-102B, D, & F	CC from RCP A, B & C
1-CC-TV-101B	CC from Thermal Barriers
1-CC-TV-105A, B, & C	Chilled CC/SW from Air Recirc Coolers A, B, & C
1-SS-TV-108A, B, & C	Hot Leg Sample
1-SS-TV-109B & C	Cold Leg Sample
1-SS-TV-111A, B, & C	S/G Surface Sample
1-DA-TV-100B	Sump Pump Discharge
1-DG-TV-100B	PDTT Pump Discharge
1-VG-TV-100B	PDTT Vent
1-CV-TV-100	Hogger Suction
1-RC-HCV-1556A, B, & C	Loop Fill
1-RC-HCV-1557A, B, & C	Loop Drain
1-RC-HCV-1519B	PG to PRT
1-RC-HCV-1550	N_2 to PRT
1-RC-TV-1549	PRT Vent
1-RC-TV-1523	PRT Drain
1-RC-PCV-1455A & B	PRZR Spray
1-RC-PCV-1455C	PORV
1-RC-PCV-1456	PORV
1-RC-TV-1522A, B, & C	PG to RCP Seal Head Tank A, B, & C
1-RH-FCV-1605	RH Hx Bypass
1-CH-LCV-1460A & B	Letdown Isolation
1-CH-HCV-1311	Auxiliary Spray
1-CH-HCV-1200A, B, & C	Letdown Orifices
1-CH-HCV-1142	RH to Letdown
1-CH-HCV-1201	Excess Letdown Hx Inlet
1-CH-HCV-1137	Excess Letdown Hx Outlet
1-CH-HCV-1307	RCP Seal Bypass
1-SI-PCV-1846	N_2 Regulator
1-SI-HCV-1898	N_2 to PRT
1-SI-HCV-1853A, B, & C	N_2 to Accumulator A, B, & C
1-SI-HCV-100	N_2 to Accumulator A, B, & C
1-CH-TV-1204A	Letdown Isolation
1-RM-TV-100C	Sample to Containment Gas & Part Monitor 1-RM-RMS-159 and 1-RM-RMS-160

NOTE: The following valves in Containment will close on loss of air.

1-SI-HCV-1851A, B, & C	Makeup to Accumulator A, B, & C
1-SI-HCV-1850A & B	Accumulator Test A
1-SI-HCV-1850C & D	Accumulator Test B
1-SI-HCV-1850E & F	Accumulator Test C
1-SI-HCV-1852A, B, & C	Accumulator Drains A, B, & C
1-SI-TV-1842	Accumulator Test Isolations
1-BD-TV-100B & G	Steam Generator "A" Blowdown
1-BD-TV-100D & H	Steam Generator "B" Blowdown
1-BD-TV-100F & J	Steam Generator "C" Blowdown
1-HV-AOD-157A, B, & C	Containment Air Recirc Fan Dampers
1-HV-AOD-154A, B, C, D, E, & F	CRDM Fan Dampers

NOTE: The following valves in Containment will open on loss of air.

1-CC-TV-108A & B	NS TK HX CC Inlet
1-CC-TV-107A & B	NS TK HX CC Outlet
1-RC-HCV-1544	Vessel Flange Leakoff
1-RH-HCV-1758	RH Hx Outlet
1-CH-HCV-1310	Charging to Loop "B"
1-CH-HCV-1303A, B, & C	RCP Seal Leakoff A, B, & C
1-CH-HCV-1389	Excess Letdown 3-Way Valve Fails to VCT (Seal Water Return)

NOTE: The following valves in the AFPH will open on loss of air and depletion of the seismic air flasks.

1-FW-HCV-100A	AFW HCV Header to A SG
1-FW-HCV-100B	AFW HCV Header to B SG
1-FW-HCV-100C	AFW HCV Header to C SG
1-FW-PCV-159A	AFW Pumps to MOV Hdr Pressure Control Valve
1-FW-PCV-159B	AFW Pumps to HCV Hdr Pressure Control Valve

74.
Following a reactor trip from 100% power , RCS median Tave is 567°F.
Which ONE of the following describes the position of the steam dump valves?

a) All dumps tripped open.

b) Banks 1 and 2 valves tripped open; bank 3 valves 50% open; bank 4 valves closed.

c) Banks 1, 2 and 3 valves tripped open; bank 4 valves 50% open.

d) Banks 1, 2 and 3 valves tripped open; bank 4 valves closed.

K/A: SYS041.K4.18 10CFR: 41.7

Level: Comprehension.

Origin: NEW Applicability: Both

References: NCRODP-23B-LP-1 Objective 8865

Correct Answer: b)

Plausible Distractors:

a. If load reject mode were enabled, this would be correct.

c. A misunderstanding of the steam dump control circuits could result in this choice.

d. A misunderstanding of the steam dump control circuitry could result in this choice.

c. Operation of both modes of operation will be discussed in detail later in this lecture.

8. There are eight dump valves (air to open) divided up into four banks which are capable of rapid opening or modulation to control steam flow to the condensers.

a. The steam dump control system is set-up to modulate the valves in the following order:

(1) 0-25% equivalent to 4-8 milliamp signal to E to P.

(a) Bank 1 (valves TCV-MS-408 A and B)

(2) 25-50% equivalent to 8-12 milliamp signal from E to P.

(a) Bank 2 (valves TCV-MS-408 C and D)

(3) 50-75% equivalent to 12-16 milliamp signal from E to P.

(a) Bank 3 (valves TCV-MS-408 E and F)

(4) 75-100% equivalent to 16-20 milliamp signal from E to P.

(a) Bank 4 (valves TCV-MS-408 G and H)

a. Valves designed to full open is 3 seconds during a trip open signal.

(1) This trip open signal energizes SOV-3 which bypasses the positioner to send full air signal to the valves to open.

4. T_{avg} Mode

a. Utilizes two inputs.

(1) Median Select

(a) Used to compare with the Tref (either actual Tref or no-load Tref as determined by plant conditions). Error signal produced only if $T_{avg} > T_{ref}$.

(2) Turbine 1st stage pressure

(a) Uses PT-446

(b) Pressure is converted to a temperature signal for use as Tref.

b. Utilizes two controllers for operation as determined by C-8 train B (turbine trip)

(1) Turbine trip controller zero offset

(a) Utilizes Median Select Tavg control compared to a constant termed No-load Tavg (547 degrees F)

1) The Error signal generated from the Tavg to No load Tavg comparator is used to create a demand signal to position the positioner such to give a set air signal to the valves.

2) If the Temp error exceeds 16 degrees F, SOV-3 for banks 1 and 2 energizes to bypass the positioner to trip open those valves.

3) If the Temp error exceeds 32 degrees F, SOV-3 for banks 3 and 4 energizes to bypass the positioner to trip open those valves.

4) When the Temp error decreases below SOV-3 setpoints the valves will modulate according to the temp error to control temperature.

(b) Used during a turbine trip to remove residual heat from the RCS to bring RCS temp to no load conditions.

(2) Load reject controller

(a) Compares Median Select Tavg Control to Tref from PT446 to generate a temperature error.

1) This error controls the positioner the same as the Turbine trip controller.

2) SOV-3 will energize to trip open the dump valves as it did in the Turbine trip controller, except with the following setpoints:

a) Banks 1 and 2

i 10°F

Condenser Steam Dumps

Load Reject Controller

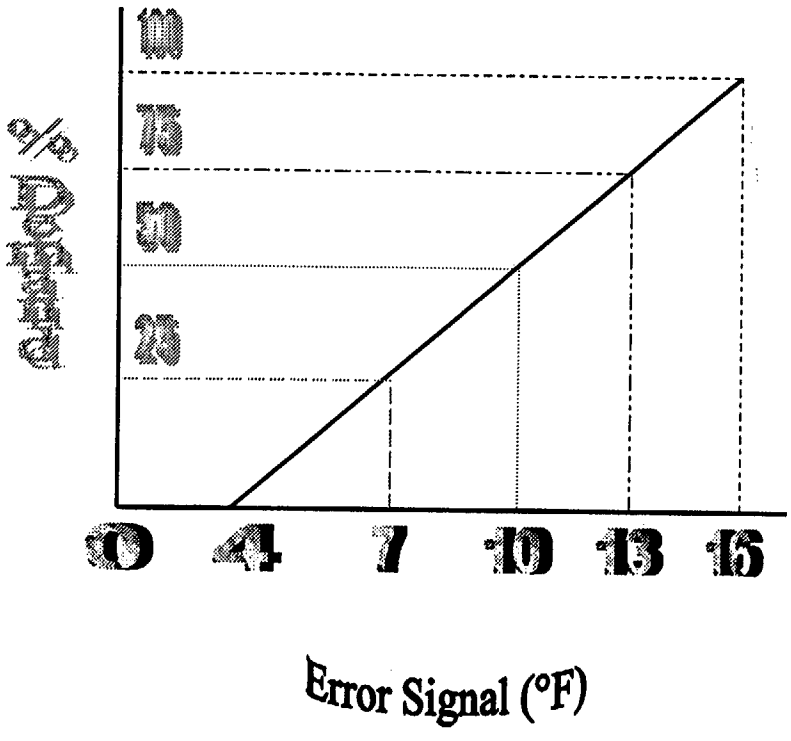

Turbine Trip Controller

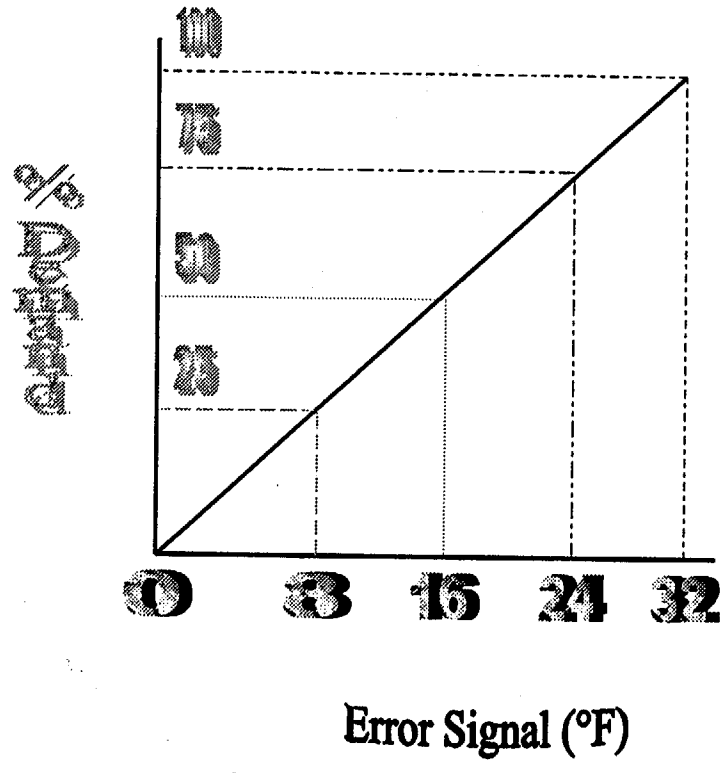

75.
During 100% power operation, all cooling water to the containment air recirculation fans is lost. As a result, the ACTUAL partial pressure will _____, and the INDICATED partial pressure will _____.

a) decrease; decrease

b) decrease; increase

c) increase; increase

d) increase; decrease

K/A: SYS103.G.10 10CFR: 41.10, 43.2

Level: Comprehension

Origin: NEW Applicability: Both

References: NCRODP-47-LP-1 Objective 4598

Correct Answer: d)

Plausible Distractors:

All are logical combinations and the distractors could be chosen based on a misunderstanding or miscalculation of Ppartial=Pair-Pvapor.

ZZZ. Concepts as they apply to the containment air recirculation units. [4480, 4481]

1. Normally cooled by the Chilled Water System and can be cooled by the service water system. The preferred source of cooling water for the coolers is chilled water because there is a reduced chance of fouling in the heat exchangers due to the quality of the chilled water compared to the service water.

2. The in-service containment air recirculation fans will trip on a containment depressurization actuation signal. After the CDA signal is reset the fans can be restarted if required.

3. The recirculation air fan's associated discharge dampers (ADD-HV-157A, B, C-1,2) open when the fan starts, and close when the fan is secured

4. When placing the Containment Air Recirc Fans in service the fans to be used are started simultaneously to avoid excessive starting current due to possible reverse rotation.

5. Following a loss of power to the containment air recirculation fans all three fans (HV-F-1A, B and C) will trip. After voltage is restored there is 30 second time delay prior to starting 1A and 1B (there is no time delay associated with 1C).

6. Containment Recirculation Air Fan HV-F-1C can be powered from either the 1H or 1J bus. If power from the 1H emergency bus is lost, the fan's alternate power supply must be manually shifted to the 1J emergency bus. This is accomplished by racking out and physically removing the fan's 1H breaker and inserting it into the 1J bus. The Unit-2-HV-F-1C control power must also be shifted to the selected (2J or 2H) bus, which is accomplished

by positioning a "swap-over" switch located on the bus 1H and 1J interface in the emergency U-2 switchgear room (Secondary Protection Bkr).

AAAA. The containment air recirculation fans must be powered from separate sources when only two fans are running. [4599]

If only two Containment Air Recirc Fans are to be started, they must be powered from opposite busses so as not to lose both if their power supply is deenergized.

BBBB. The saturation temperature used for deriving the saturation pressure for use in the partial pressure calculation is sensed between the air cooler and the recirc fan. If the cooling water flow to the air coolers are reduced or isolated then the temperature as sensed will go up. This will cause the indicated Tsat to increase therefore the indicated Psat will increase which will cause the partial pressure to read lower than actual. The same affect will occur if all recirc air fans trip. If only one fan trips there should not be a large change because the Tsat is sensed at all three fans and the lowest of the three temperatures is used. Actual partial pressure will slowly increase as containment bulk air temperature increases. [4598]

CCCC. Containment dome recirculation fans. [4483]

1. The Containment dome recirculation air fans HV-F-92A, -92B, and -92C are located on the operating floor of the Containment Structure. The fans take a suction on the cooler air in the lower level (motor cube).

2. The fans discharge vertically upward to create a turbulence in the dome to prevent air stratification.

DDDD. The CRDM air fans draw air from the Containment atmosphere through the control rod drive mechanism shroud and then discharges through the discharge

76.
During 100% power operation on unit 2, the "B" containment air recirculation fan trips. Local investigations reveal the autotrip indicator (white button) extended on the fan's power supply breaker.

Which ONE of the following actions is required to remedy the situation?

a) Rotate the control switch to PULL-TO-LOCK to reset the 86 device.

b) Have the operator locally reset the breaker (with SRO concurrence), restart the fan locally at the breaker.

c) Have the operator locally reset the breaker (with SRO concurrence), restart the fan from the MCR; one restart attempt from the MCR is allowed.

d) The Electricians MUST investigate prior to restart.

K/A: SYS022.A2.01 10CFR: 41.5/43.5/45.3/45.13

Level: Comprehension, recognizing the type of breaker, and the administrative requirements which exist an ability to apply requirements is required.

Origin: NEW Applicability: RO ONLY

References: OPAP-0006 Objective 13599

Correct Answer: d)

Plausible distractors:

a) 4160V breakers have an 86 device which is reset by going to PTL, this is a 480V load.

b) This would require an approved troubleshooting plan.

c) This action would only be approved on a 480V MCC breaker with a thermal overload device. Not a 480V switchgear breaker.

76

b. The Tag-Out should include the annunciator in accordance with OPAP-0010, Tag-Outs. **(Surry)**

6.7.6 A walkdown of Station annunciator panels should be performed weekly. **(North Anna)**

a. Any annunciators in alarm should be noted along with the cause of the alarm and the corrective action required for clearing the alarm.

b. The weekly review of the Station annunciator panels should be performed by an Operations Supervisor. The Operations Supervisor should submit a report to the Operation and Maintenance Superintendents.

6.8 Response to Indications

6.8.1 Instrument readings should be believed and treated as accurate unless proven otherwise.

6.8.2 If an unexpected reading occurs on an instrument, other indications should be observed to check the reading, if possible.

6.8.3 Abnormal or unexpected indications should be promptly investigated to determine the cause of the problem so immediate corrective action can be taken and promptly reported to the Unit SRO.

6.8.4 If an instrument or indication is determined to be malfunctioning or inaccurate, the device should be appropriately labeled, the Unit SRO notified, and a Maintenance Work Request initiated.

6.9 Resetting Protective Devices

6.9.1 Prior to resetting a protective device, the cause for the device tripping should be determined.

6.9.2 Prior to resetting a protective device, at a minimum, it shall be verified that no abnormal condition exists.

6.9.3 At the discretion of the Shift Supervisor, thermal overload devices may be reset once.

6.9.4 Reactor Trips require a full investigation in accordance with VPAP-1404, Reactor Control.

ATTACHMENT 1

(Page 1 of 1)

TYPICAL 480-VOLT BREAKER

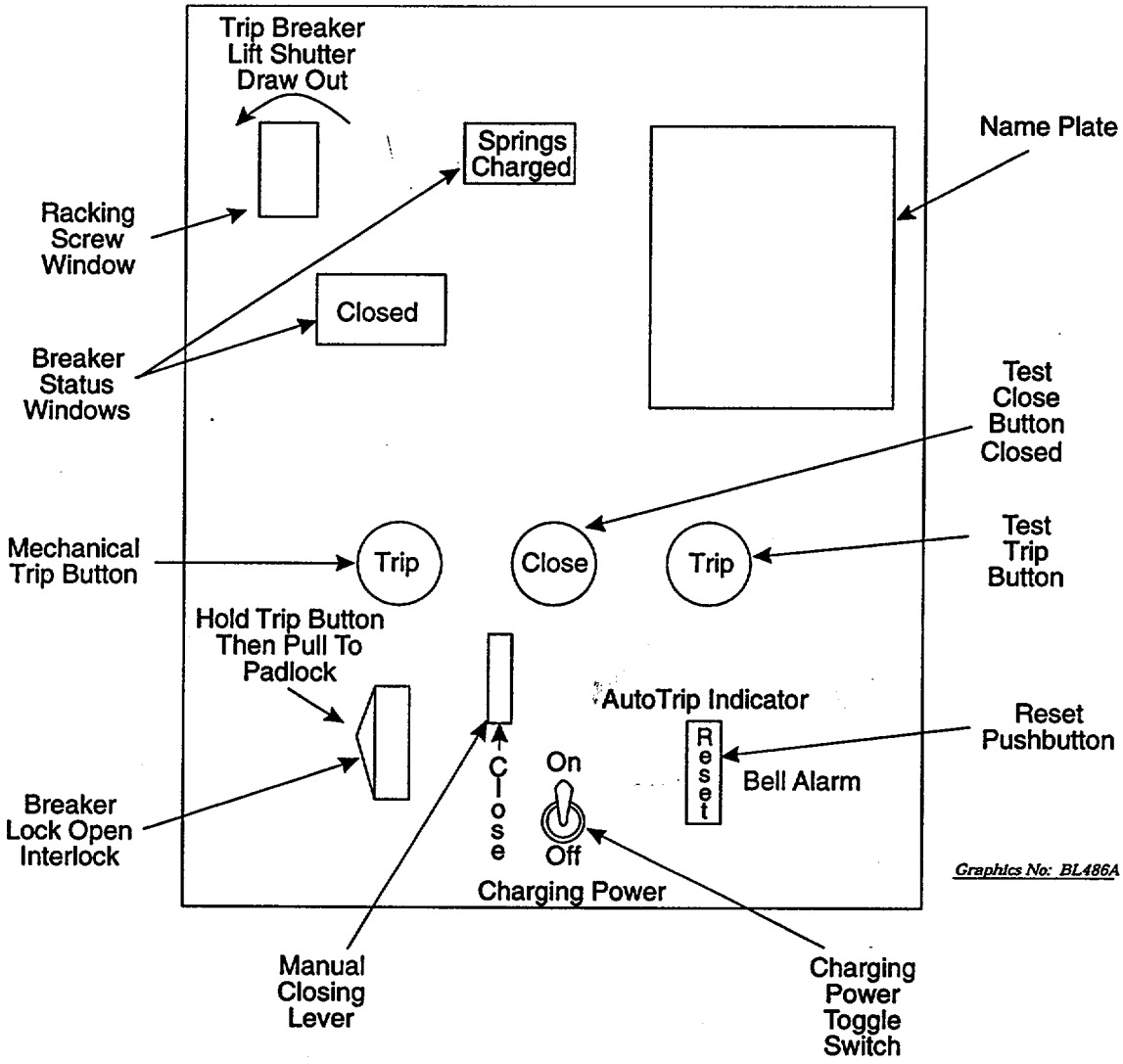

TYPICAL 480-VOLT BREAKER

77.
The following conditions exist:

- 14 minutes ago, PT-446, first stage impulse pressure channel III, failed low.
- 3.5 minutes ago, all three main feed regulating valves failed closed.
- 3 minutes ago, the Reactor Operator manually tripped the reactor.
- Steam generator levels are currently at 34% wide range level.

Which ONE of the following AMSAC system indicators is consistent with given unit conditions?

a) Annunciator E-D4, AMSAC INITIATED, lit.

b) Annunciator A-F8, AMSAC ARMED, lit.

c) Annunciator A-F5, AMSAC TRBL, lit.

d) Permissive status light P-H7, AMSAC OPERATIONAL BYPASS, lit.

K/A: GEN2.4.46 10CFR: 43.5

Level: Comprehension

Origin: NEW Applicability: RO ONLY

References: NCRODP-77A-LP-3 Objective 10355

Correct Answer: d)

Plausible Distractors:

a. If first stage pressure had not failed low this would be correct.

b. If first stage impulse pressure had not failed low this would be correct, this comes in 27 seconds before the (a) distractor.

c. Only alarm to denote instrumentation failures associated with the AMSAC system, first stage impulse is NOT a failure which initiates this alarm.

2. 2/2 first stage pressure indicates power greater than 38% (C-20)

   a. Conditional C-20 locks in when power goes above 38% and stays locked in for 6 minutes (TDDO) after power is reduced to less than 38% (based on threshold when bulk boiling in core may occur.) (Six minutes based on worst case decay heat removal from 100% power)

3. The 27 second steam generator low level timer does not function unless C-20 for that PLC is in

4. An AMSAC actuation can be expected on most reactor trips from above 38% power due to steam generator levels decreasing to less than 13% for greater than 27 seconds during the C-20 timeout

5. Design Basis

   a. 38% is based on the point above which bulk boiling will occur

   b. The 6 minute TDDO is based on worst case decay heat removal from 100% power

      (1) Prevents clearing C-20 until 6 minutes have elapsed since a reactor trip to ensure auto start of AFW

   c. The 27 second time delay (TDPU) gives RPS time to respond and ensures the turbine trips within the 30 second time requirement

D. Automatic Actuation performed by AMSAC:

77

B. Inputs to the AMSAC System:

1. Must be isolated from the Reactor Protection System:

   a. Only protection system sensing devices are common

   b. Isolation amps are used between the sensing devices and AMSAC

2. Separate power supplies are used:

   a. AMSAC powered from the TSC UPS power supply system. (Power only needed for 6 minutes, UPS good for 15 minutes.)

   b. Breakers located on TSC breaker panels in the ALARA office in TSC

3. Instrumentation inputs:

   a. Narrow range steam generator levels, (Channels I, II, and III)

   b. First stage pressure for power indication:

      (1) PT-446 and 447

C. Logic which creates an AMSAC initiation

NOTE: Three Programmable Logic Controllers (PLC) in AMSAC cab - 1 per S/G

1. 2/3 steam generator narrow range levels less than 13% on 2/3 steam generators for greater than 27 seconds (< 30 seconds required to trip turbine in analysis)

F. Annunciator Response Procedures

1. Main control board annunciator alarms

1A-F5, AMSAC TRBL

Low supply voltage from the UPS System

Any PLC battery low, for logic circuit ~retains memory)

Any PLC SV power supply failed

Any PLC module failure

Any PLC self checking clock ckt. detects a problem

Any PLC back plane voltage low

1A-F6, AMSAC TEST SWITCH OUT OF NORM

Any PLC test switch out of normal position

1A-F7, AMSAC MAN BYP

Either bypass (MCB or AMSAC Panel) switch in bypass. This diables AMSAC and renders it inoperable. [10355]

1A-F8, AMSAC ARMED

Any SG less than 13% on 2/3 channels and C-20 satisfied and all NORMAL/BYPASS switches in NORMAL

1E-D4, AMSAC INITIATED

AMSAC System actuated

1P-H7, AMSAC OPERATIONAL BYPASS

At least 6 minutes have elapsed since the C-20 signal was present. This disables AMSAC and renders it inoperable [10355]

1P-H8, AMSAC VIOLATED DOOR OPEN

78.
The following plant conditions exist:

- RCS heatup is in progress following a forced maintenance outage
- RCS pressure is 300 psig.
- RCS temperature is 220°F.
- PZR level begins to decrease rapidly.
- Containment sump level is noted to be increasing.
- The Reactor Operator increases charging flow and isolates letdown.
- PZR level is stabilized at 30% (remained on scale throughout the event).
- Charging flow is 200 gpm.

Which ONE of the following procedures will guide the crew's actions from this point?

a) AP-16, Increasing Primary Plant Leakage.

b) AP-17, Shutdown LOCA.

c) AP-11, Loss of RHR.

d) E-0, Reactor Trip or Safety Injection.

K/A: GEN2.4.9 10CFR: 41.10

Level: Comprehension

Origin: New Applicability: RO only.

References: AP-16 and AP-17 Objective 12530

Correct Answer: b)

Plausible Distractors:

a. Used if leakage is less than 160 gpm (mode 4).

c. Used if indications of RHR pump vortexing exist.

d. Only applicable greater than 350°F.

78

NUMBER	PROCEDURE TITLE	REVISION
1-AP-17	SHUTDOWN LOCA (WITH TEN ATTACHMENTS)	8 PAGE 1 of 36

PURPOSE

To provide instructions to respond to a Loss of Coolant Accident (LOCA) that occurs while Unit 1 is in Mode 4, 5, or 6.

INFORMATION ONLY

ENTRY CONDITIONS

This procedure is entered if Unit 1 is in Mode 4, 5, or 6 (with the Reactor Head installed) and any of the following conditions exist:

- Uncontrolled decrease in PRZR level, or
- Uncontrolled decrease in RCS subcooling, or
- Uncontrolled decrease in RCS Standpipe level indication

RECOMMENDED APPROVAL:	DATE	EFFECTIVE DATE
RECOMMENDED APPROVAL - ON FILE		03-23-98
APPROVAL:	DATE	
APPROVAL - ON FILE		

78

STEP	ACTION/EXPECTED RESPONSE	RESPONSE NOT OBTAINED
7.__	CHECK IF CHARGING FLOW IS ADEQUATE:	(letdown isolated in step 2)
	a) Increase charging flow as necessary to maintain PRZR level	
	b) Check the following: • Check PRZR level - GREATER THAN 21% [40%] • Check PRZR level - STABLE OR INCREASING	b) GO TO Step 11.
	c) Check RCS subcooling based on Core Exit TCs - GREATER THAN 35°F [125°F]	c) GO TO Step 11.
	d) Check Charging flow - LESS THAN 160 GPM	d) GO TO Step 12. (continues in AP-17)
	e) GO TO appropriate procedure: • 1-AP-16, INCREASING PRIMARY PLANT LEAKAGE OR • 1-AP-11, LOSS OF RHR OR • Procedure and step in effect	
8.__	RECORD MOST RECENT TIME TO BOILING ESTIMATE FROM 1-GOP-13.0, ALTERNATE CORE COOLING METHOD ASSESSMENT: • Time (minutes):_____	

SHUTDOWN LOCA

IIII. Shutdown loss-of-coolant accident (LOCA). [12530]

1. Additional precautions are required after securing safety injection flow when Reactor Coolant System temperatures are < 285°F

   In order to prevent an unnecessary RCS overpressurization SI termination is allowed with less restrictive criteria when the RCS is in a cold condition. Because the SI termination criteria are less restrictive the operator needs to be especially alert for any decrease in RCS pressure or PZR level that warrants SI reinitiation.

2. 1-AP-17 is used when responding to a shutdown loss of inventory event if 160 gpm of normal charging flow is required to maintain pressurizer level with letdown isolated

   This flowrate is low enough that it is within the normal capacity of the charging system. The charging system is designed to compensate for a 3/8" break at normal operating pressure and temperature. Breaks greater in size than that are usually considered to be LOCAs rather than RCS leaks.

3. 1-AP-17 requires only one charging pump to be aligned initially to flow the boron injection tank

   This prevents unnecessary overpressurization of the RCS

LOSS OF REACTOR CAVITY DURING REFUELING

78

NUMBER	PROCEDURE TITLE	REVISION
1-AP-16	INCREASING PRIMARY PLANT LEAKAGE (WITH FOUR ATTACHMENTS)	15
		PAGE 1 of 13

PURPOSE

To provide instructions for locating, quantifying, and mitigating increasing primary plant leakage.

ENTRY CONDITIONS

This procedure is entered when there is increasing primary plant leakage, as indicated by any of the following:

- Increasing charging flow or more frequent VCT makeups,
- Decreasing PRZR level due to leakage,
- Increasing PRT pressure, temperature, or level not due to normal operations,
- Increasing Containment pressure, or temperature, not due to normal operations,
- Unexplained increase in RCP Thermal Barrier CC flow or temperature,
- Increasing Reactor Vessel Flange Leakoff temperature,
- More frequent PDTT pumping or Containment Sump Pump operation,
- Increasing area radiation or radiation in systems interfacing with RCS, or
- Leak Rate PT results increasing.

RECOMMENDED APPROVAL:	DATE	EFFECTIVE DATE
RECOMMENDED APPROVAL - ON FILE		03-03-99
APPROVAL: APPROVAL - ON FILE	DATE	

STEP	ACTION/EXPECTED RESPONSE	RESPONSE NOT OBTAINED

NOTE:
- If RHR is lost, then 1-AP-11, LOSS OF RHR, should be performed.
- If Refueling Cavity level decreases in an uncontrolled manner, then 1-AP-52, LOSS OF REFUELING CAVITY LEVEL DURING REFUELING, should be performed.

1.__ NOTIFY UNIT SUPERVISOR

* 2.__ VERIFY THE FOLLOWING PARAMETERS - UNDER CONTROL OF OPERATOR:

- PRZR level
- RCS subcooling based on Core Exit TCs
- VCT level

IF Unit is in Mode 4, 5, or 6 with the Reactor Head installed, THEN GO TO 1-AP-17, SHUTDOWN LOCA, STEP 1.

IF Unit is in Mode 1, 2, or 3 and PRZR level is decreasing, THEN do the following:

a) Isolate Letdown by closing the following valves:

1) Letdown Orifice Isolation Valves:

- 1-CH-HCV-1200A
- 1-CH-HCV-1200B
- 1-CH-HCV-1200C

2) Letdown Isolation Valves:

- 1-CH-LCV-1460A
- 1-CH-LCV-1460B

b) IF PRZR level cannot be maintained in AUTO level control, THEN place 1-CH-FCV-1122 controller in Manual and adjust Charging flow to control PRZR level.

c) Start a makeup to the VCT from the blender.

(STEP 2 CONTINUED ON NEXT PAGE)

78

NUMBER	PROCEDURE TITLE	REVISION
1-AP-11	LOSS OF RHR (WITH TEN ATTACHMENTS)	12 PAGE 1 of 20

PURPOSE

To provide instructions for maintaining Core Cooling and protecting the Reactor Core in the event that RHR Cooling is lost.

INFORMATION ONLY

ENTRY CONDITIONS

This procedure is entered when RHR is required for Core Cooling and any of the following conditions exist:

- Air-binding of operating RHR pumps as indicated by:
  - Flow oscillations, or
  - Motor amps fluctuating, or
  - Excessive pump noise.
- Annunciator "E" Panel A-6, RHR PP 1A AUTO TRIP, is LIT, or
- Annunciator "E" Panel A-7, RHR PP 1B AUTO TRIP, is LIT, or
- Annunciator "E" Panel A-8, RHR SYSTEM LO FLOW, is LIT, or
- Loss of RHR pumps due to loss of power, or
- Failure of RHR system to control RCS temperature due to loss of CC or valve failures, or
- Loss of Service Water System with RHR System in service, or
- Loss of Component Cooling System with RHR System in service.

RECOMMENDED APPROVAL:	DATE	EFFECTIVE DATE
RECOMMENDED APPROVAL - ON FILE		3-12-98
APPROVAL:	DATE	
APPROVAL - ON FILE		

79.
Which ONE of the following identifies an **OFF-NORMAL** parameter concerning reactor coolant pump operation at 100% power?

a) "B" RCP seal injection flow indicates 7.7 gpm.

b) "B" RCP thermal barrier CC return flow indicates 42 gpm.

c) #1 seal D/P indicates 180 psid.

d) #1 seal leakoff flow indicates 3.4 gpm.

K/A: SYS003.K4.04 10CFR: 41.7

Level: Knowledge, a memorization of RCP parameters which preclude continued operation is required.

Origin: NEW Applicability: RO ONLY

References: OP-5.2, AR-C-C4 Objective 3494

Correct Answer: c)

Plausible distractors:

a) Normally 8 gpm, this distractor is 0.3 gpm less than optimum flow, well within the allowable tolerance for minimum flow. Alarm is at 6.5 gpm.

b) 40 gpm per pump is optimum, 2 gpm greater than optimum is well within the tolerance. Alarm and automatic actions occur at 59 gpm.

d) Normally 3 gpm, this distractor is 0.4 greater than optimum, well within the allowed tolerance. No alarm conditions exists.

RCP 1A-B-C THERM BARR CC HI/LO FLOW	≥ 59 gpm Hi ≤ 36 gpm Lo

1.0 Probable Cause
- 1.1 Reactor coolant to component cooling leak - Thermal barrier cooler tube failure
- 1.2 Component cooling system high pressure - flow imbalance
- 1.3 Loss of component cooling

2.0 Operator Action
- 2.1 For Hi flow
  - 2.1.1 Check 1-CC-FI-116A, 116B and 116C to determine which RCP has CC Hi flow condition.
  - 2.1.2 Determine if RCP Thermal Barrier Tube Rupture has occurred by monitoring for increased RCS Leakage, such as VCT level decrease OR charging/letdown imbalance.
  - 2.1.3 Ensure 1-CC-TV-116A, 116B or 116C is closed on a Thermal Barrier tube rupture for affected RCP.
  - 2.1.4 Manually isolate CC to affected RCP as soon as possible.
  - 2.1.5 Maintain seal water injection flow. Do not allow pump to operate if lower radial bearing reaches 225°F.
- 2.2 For Lo flow
  - 2.2.1 Check 1-CC-FI-116A, 116B and 116C to determine which RCP has CC lo flow condition.
  - 2.2.2 Verify 1-CC-TV-116A, 116B or 116C is open for the affected RCP.
  - 2.2.3 Readjust CC flow as necessary.
  - 2.2.4 IF caused by loss of component cooling, THEN refer to 1-AP-15.
  - 2.2.5 IF Seal Injection AND Thermal Barrier CC Flow have both been lost, THEN GO TO 1-AP-33.2, Loss of RCP Seal Cooling.

3.0 References
- 3.1 11715-LSK 25-1
- 3.2 11715-ESK 6MC, 10C, 10AAJ
- 3.3 11715-FM-79B component cooling
- 3.4 NAPS instrumentation CC 065, 064, 066

4.0 Actuation
- 4.1 1-CC-FT-116A, B, and C

3.4 For each RCS Loop in which an RCP will be started, the Cold Leg Loop Stop Valve is CLOSED with the Loop Stop Valve Bypass Valve OPEN OR both Loop Stop Valves are OPEN.

3.5 RCP parameters are on Digital Trend or the RCP Recorder.

3.6 RCP vibration instrumentation is operable.

3.7 RCS pressure is at least 280 psig.

3.8 RCS pressure is at least 325 psig when starting an RCP for filling and venting.

4.0 PRECAUTIONS AND LIMITATIONS

4.1 Comply with the following guidelines when marking steps N/A:

- IF the conditional requirements of a step do not require the action to be performed, THEN mark the step N/A.

- IF any other step is marked N/A, THEN have the Shift Supervisor (or designee) approve the N/A and justify the N/A on the Procedure Cover Sheet.

4.2 Perform all operations in accordance with RWPs. Make every effort to maximize personnel safety while minimizing personnel exposure and area contamination, both surface and airborne. Use ALARA concepts.

4.3 IF any Number 1 Seal leakoff values reach 5.9 gpm, THEN immediately refer to 1-AP-33.1, Reactor Coolant Pump Seal Failure.

4.4 Verification that RCS Loops have not experienced a Boron dilution event will prevent situations which could cause an inadvertent RCS dilution when the RCP is started and forced flow is initiated in the RCS.

4.5 The first RCP started will initiate forced flow in all non-isolated RCS Loops, due to reverse flow.

4.6 The RCP Trip Criteria are as follows:

- Hot and Cold Leg Isolation Valves for RCP being started open in coincidence with RCP loop flows NOT increasing within 30 seconds after closing breaker
- RCP starting current NOT decreasing within 30 seconds after breaker closure
- RCP proximity vibration greater than 20 mils
- RCP seismic vibration greater than 5 mils
- Number 1 Seal ΔP less than 200 psid
- Number 1 Seal Leakoff flow less than allowed by the curve in Attachment 1
- Number 1 Seal Leakoff flow is ≥ 5.9 gpm
- RCP Motor Bearing temperatures greater than 195°F
- RCP Lower Seal Water Bearing (Pump Bearing) temperature greater than 225°F
- RCP Stator Winding temperature greater than 300°F
- Loss of Seal Injection AND CC to RCP Thermal Barrier

4.7 IF after a pump start, Number 1 Seal ΔP is rapidly decreasing AND it is imminent that Number 1 Seal ΔP will decrease to less than 200 psid, THEN the affected RCP MUST be stopped when the Number 1 Seal ΔP reaches 240 psid. This will ensure enough seal flow is available during pump coastdown.

4.8 Start only ONE RCP at a time.

ATTACHMENT 1

(Page 1 of 1)

NUMBER 1 SEAL NORMAL OPERATING RANGE

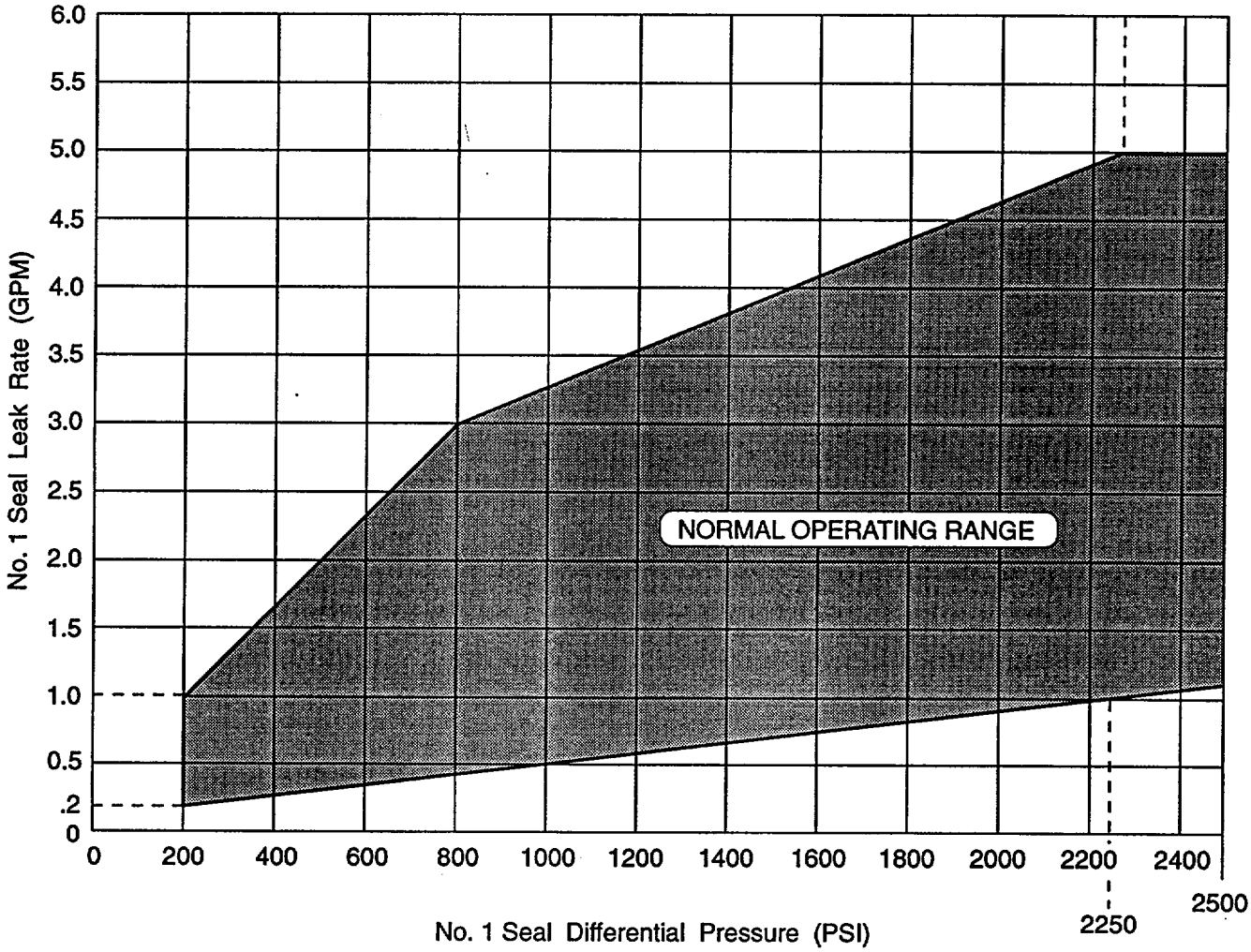

Graphics No: KM668A

ATTACHMENT 2

(Page 1 of 1)

NUMBER 1 SEAL LEAK RATE OPERATING VALUES

Condition	Parameter	Operating Ranges		
		Normal	Minimum	Maximum
Startup	Flow (gpm)		0.2	
	Differential Pressure (psid)		200	
Continuous Operation	Flow (gpm)	1.0 to 5.0	0.8	6.0
	Differential Pressure (psid)	2250	2150	2300

1. Minimum start-up requirements across the Number 1 Seal are 0.2 gpm at 200 psid. IF starting up at greater than 200 psid, THEN determine the minimum Number 1 Seal leak rate requirements by using Attachment 1.

2. IF the Number 1 Seal leak rate is outside the normal operating ranges but within the operating limits of 0.8 to < 5.9 gpm, THEN continue pump operation as follows:

   - Verify the Seal Injection flow is greater than the Number 1 Seal leak rate for the affected RCP.

   - Closely monitor pump and seal parameters.

   - Contact Westinghouse.

3. IF any Number 1 Seal leakoff values reach 5.9 gpm, THEN immediately refer to 1-AP-33.1, Reactor Coolant Pump Seal Leakoff Failure.

80.
Which ONE of the following personnel monitoring devices detects both beta and gamma to determine whole body exposure?

a) Digital alarming dosimeter

b) Self-reading pocket dosimeter

c) Thermo-luminescent dosimeter

d) Whole body counter

K/A: GEN2.3.5 10CFR: 41.11

Level: Knowledge

Origin: NEW Applicability: RO only

References: Plant Access Training Document Objective (NET objectives)

Correct Answer: c)

Plausible Distractors:

Distractors are all means of personnel monitoring.

Dosimetry

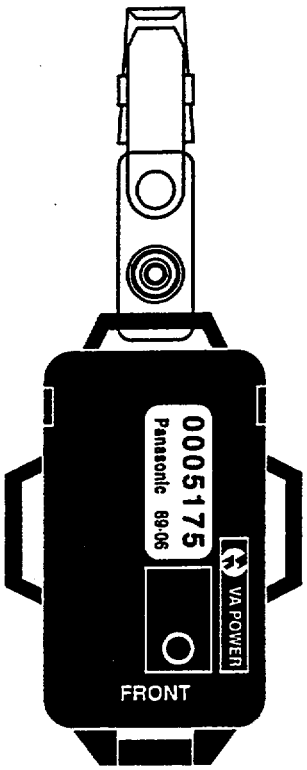

NET 34

The three types of dosimeters used by Virginia Power are:

- Thermoluminescent Dosimeter (TLD)
- Digital Alarming Dosimeter (DAD)
- Self-Reading Dosimeter (SRD)

The thermoluminescent dosimeter (TLD) allows the company to measure the workers' exposure while in the station. The TLD is used for the permanent occupational dose record.

The [redacted] designed to detect and measure exposure from [redacted]. The window allows measurement of skin dose from both beta and gamma. Other portions of the badge are used to measure either gamma radiation only or more penetrating forms of beta radiation.

The TLD is stored near the entrance to the Protected Area. All workers must have their TLD prior to entering the Protected Area. It is the responsibility of each employee to ensure that the TLD they obtain is their own. TLDs may be worn outside the Protected Area for short periods of time but shall never be taken off site, except during an emergency evacuation.

Digital alarming dosimeters (DADs) are issued to allow the worker to have an estimate of the dose received. The DAD also provides the worker with general area dose rates while exposed to radiation.

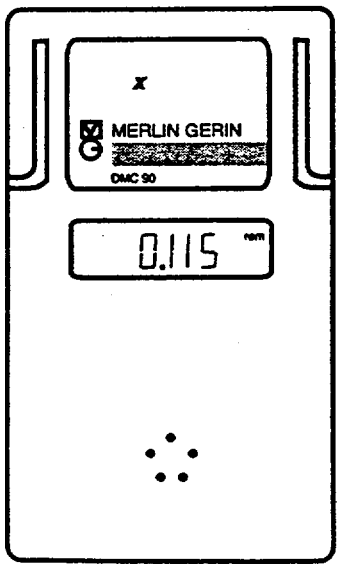

NET 37

The DAD is designed to measure gamma and X-radiation. An X on the front of the dosimeter marks the location of the radiation detector.

The DAD has two modes of operation, dose and dose rate.

- The dose mode provides a readout of estimated dose in units of rem. For example, if 0.115 rem is displayed, the dose is 115 mrem.

NOTE: When obtaining a DAD from Exposure Control, verify the DAD display indicates 0.000 rem, if not, return the DAD.

- The dose rate mode provides a readout of the estimated dose rate in units of rem h^{-1} (rem/hr). For example, if 0.065 rem h^{-1} is displayed, the dose rate is 65 mrem/hr.

A button on the side of the DAD allows the worker to change modes.

81.
A large-break LOCA occurred on unit 1 and all automatic actions have occurred.

Which ONE of the following identifies the status of the recirc spray heat exchanger service water supply valves (1-SW-MOV-103A/B/C/D)?

a) Fully open, indicate full open.

b) Fully open, indicate mid-position.

c) Open to throttled position, indicate full open.

d) Open to throttled position, indicate mid-position.

K/A: SYS076.A4.04 10CFR: 41.7

Level: Knowledge

Origin: NEW Applicability: RO ONLY

References: NCRODP-54-LP-1 Objective 7676

Correct Answer: c)

Plausible Distractors:

a. Misconception concerning final valve position, valves will indicate full open.

b. Misconception concerning final valve position.

d. Valves will open to throttled position.

4. IRS Heat Exchangers

a. The discharge of each IRS pump passes through the shell side of a shell and tube RS heat exchanger (1A and 1B). As the RS water passes through the heat exchanger, heat is transferred to the cooler service water (SW) flowing through the tubes. There are a total of four RS heat exchangers - two for IRS and two for ORS.

b. Service water is admitted to the heat exchangers when a CDA signal opens the supply and return SW valves for each RS heat exchanger (normally closed).

(1) Supply valves (SW-MOV-103A,B,C,D) have open limit switch set to stop MOV travel at throttled position (less than 100% open) to prevent SW pump runout during accident conditions. Valves indicate full open.

c. The cross connect valves (MOV 102A, B and 106A, B) are normally open and do not receive a signal to open on a CDA signal.

d. Service water (SW) flows through the heat exchangers at a rate of 4500 gpm per HX and is monitored at the outlet of each heat exchanger by radiation monitors. If the SW radiation monitors detect tube leaks, each RS heat exchanger may be isolated.

5. IRS Spray Headers

a. There are two IRS spray headers, one per IRS pump. The spray rings are 180° and are located in the dome of containment.

b. Each spray ring is a semi-circulator 8 inch pipe containing equally-

82.
The following plant conditions exist:

- Plant S/U and ramp in power in progress
- Power level is currently 12%
- At P-10, all applicable actions were taken
- At this time, compensating voltage fails low on Nuclear Instrument N-35, Intermediate Range detector.

Which ONE of the following will occur if power remains at 12%?

a) Large increase on N-35 IR amps (sufficient to cause a reactor trip signal).

b) Slight decrease on N-35 IR amps (equivalent to 3-5% power range equivalent).

c) Slight increase on N-35 IR amps (equivalent to 3-5% power range equivalent).

d) No observable effect on N-35 IR amps.

K/A: GEN2.1.7 10CFR: 43.5

Level: Knowledge

Origin: New. Applicability: RO ONLY

References: ND-93.2-LP-3A Objective 7803

Correct Answer: d)

Plausible Distractors:

a/b/c all three apply compensating voltage inadequacies. In this case reactor power is high enough to discard compensating voltage effects.

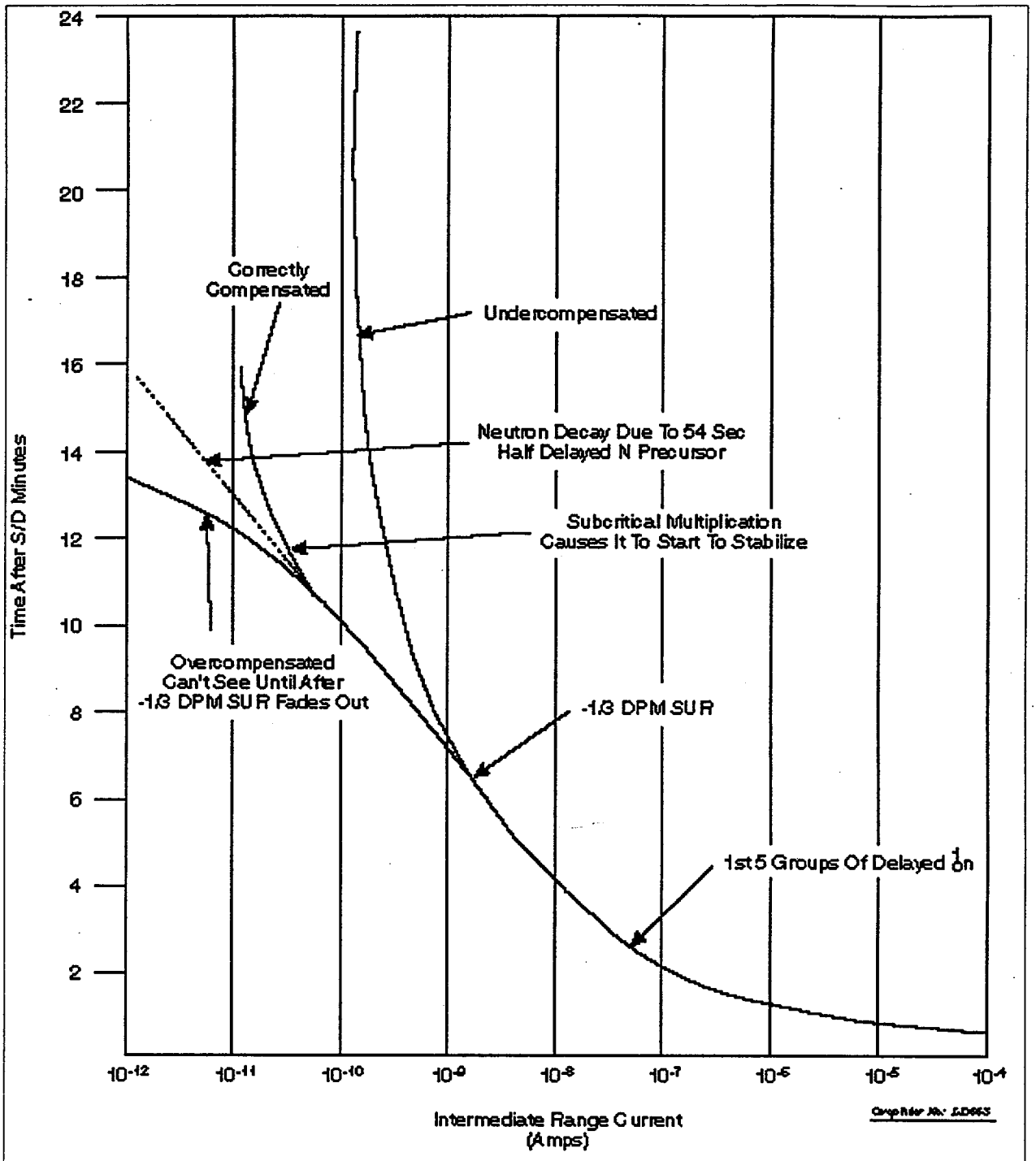

UNDER/OVER COMPENSATION EFFECTS

83.
During 100% power operation, PRT in-leakage is identified as increased. Which ONE of the following identifies a possible source?

a) Reactor vessel head vent valve leakage.

b) RCP seal return relief valve leakage.

c) RCS loop stop valve stem leakoff.

d) RCP #2 seal leakoff.

K/A: SYS007.A1.03 10CFR: 41.5

Level: Knowledge

Origin: NEW Applicability: RO ONLY

References: NCRODP-38-LP-2 Objective 3510

Correct Answer: b)

Plausible Distractors:

a,c,d. Several sources of potential RCS leakage are directed to the PRT.

F. Pressurizer Relief Tank Design Features

1. Purpose

a. Designed to accept a steam discharge from the pressurizer equal to 110% of the vapor volume at full power.

b. Tank is not designed to accept a continuous discharge from the pressurizer.

2. Description

a. Volume: 1300 cu. ft.

(1) 900 cu. ft. PG, and 400 cu. ft. Nitrogen

b. Nitrogen blanket used to prevent fire or explosion from release of hydrogen from the pressurizer.

c. The volume of the liquid in the tank is capable of absorbing heat from the design discharge. The minimum level in the PRT is maintained to contain and condense a discharge of steam from the pressurizer safety or PORV's. The sparger line into the PRT discharges below water level to promote adequate mixing of the steam discharge and the water in the PRT so that the energy from the design discharge may be absorbed by the water contained in the PRT. [10502]

d. Over-pressure protection

(1) Two (2) rupture disks set to rupture to containment

atmosphere at 100 psig in PRT.

(a) Relief capacity of the two rupture discs is equal to the combined relief capacity of the safeties (1.14×10^6 lbm/hr).

e. Inputs

(1) Pressurizer code safeties - 2485 psig

(2) Pressurizer PORV's - 2335 psig (PCV-1456); 92.5% Master Pressure Controller Output (PCV-1455C)

(3) RHR relief - 467 psig

(4) Letdown relief - 600 psig

(5) PDTT relief - 150 psig

(6) Seal water return relief - 150 psig

(7) Excess letdown/loop drain header relief - 150 psig

f. Constructed of carbon steel with a corrosion resistant coating on the inside.

3. Tank temp, pressure, and level control

a. Cooled by use of primary grade water spray throughout the top of the tank. The total spray flow rate of 150 gpm is designed to cool from 200 to 120 in one hour.

84.
The following conditions exist on unit 1:

- Unit is at 98% power during a ramp to full power.
- Turbine load control is in IMP-IN.
- The red VALVE POS LIMIT light is lit.
- Turbine first stage impulse pressure channel 1-MS-PT-132 fails low.

Which ONE of the following is correct concerning the plant's response to this failure?

a) Governor valves #4 and #1 will open to increase turbine load.

b) Governor valves will remain stationary.

c) Governor valves #2 and #3 will open to increase turbine load.

d) Throttle valves #4 and #1 will open to increase turbine load.

K/A: SYS045.K4.39 10CFR: 41.7

Level: Comprehension.

Origin: NEW Applicability: RO only

References:NCRODP-75-LP-1 Objective 8906

Correct Answer: b)

Plausible Distractors:

a. If the load limiter were not functioning, this would be true.

c. Misconception concerning the order of opening the GVs.

d. Throttle valve control is used during turbine rollup, but GV control is used in load control.

NOTE: Turbine control is normally transferred at 98%.

5.2.64 WHEN desired to Transfer the Main Turbine load control to IMP-OUT control, THEN do the following:

_____ a. Ensure Reactor power is greater than or equal to 98 percent power.

_____ b. Match the E. H. Turbine Control Panel REFERENCE AND SETTER values.

_____ c. Pulse down the Valve Position Limiter until the red light for the Valve Position Limit is LIT.

_____ d. Pulse up the Valve Position Limiter until the red light for the Valve Position Limit is NOT LIT.

_____ e. Verify the Governor Valve Tracking Meter reads ZERO.

_____ f. Push the IMP-OUT pushbutton.

_____ g. IF Unit is NOT at 100 percent power, THEN raise the Valve Position Limiter to allow raising the Unit to 100 percent power.

5.2.65 **{P2} For ramp to 100 percent reactor power, do the following:**

_____ a. **{P2} Have OMOC attend brief for ramp up to 100% reactor power.**

b. **{P2} Perform 1-PT-24.1, Calorimetric Heat Balance (Computer Calculation) on the following computers:**

_____ • **{P2} Unit 1 PCS**

_____ • **{P2} Unit 1 P-250 Computer**

(a) This light indicates whenever the power source to the electronic controller is from the Semi-Vital bus.

(b) Auto transfer of power supply to the permanent magnet generator on the main exciter shaft occurs when the main generator is at around 1000 RPM.

7. **CIV Monitor** (Not Functional - jumpered out)

8. **VALVE POS LIMIT** (Valve Position Limit) - indicates that the desired governor valve position is greater than the setpoint of the limiter, therefore the governor valve position is being controlled by the limiter.

9. **RUNBACK OPER** (Turbine Runback Operating)

[8909]

(a) In the event of an approach to overpower ΔT or overtemperature ΔT conditions, the Turbine Runback Subsystem provides a signal to the AGVC and the MGVC to automatically reduce turbine load at a safe yet rapid rate, as an aid to the operator to attempt to prevent an OTΔT or OTΔT reactor trip.

(b) The OPΔT and OTΔT setpoints are variable, and are fully described in NCRODP-77, Reactor Protection System.

(1) two of the three overtemperature ΔT channels indicate 3°F less than the OTΔT reactor trip setpoint (C-3 interlock); or

(2) two of the three overpower ΔT channels indicate 3°F less than the OPΔT reactor trip setpoint (C-4 interlock).

85.
Following a transition from 1-E-0 to 1-E-1 the STA reports the following:

- An orange path on core cooling
- A red path on containment
- An orange path on subcriticality
- A red path on integrity

Which ONE of the following identifies the procedure that is required to be implemented?

a) 1-FR-C.2

b) 1-FR-Z.1

c) 1-FR-S.1

d) 1-FR-P.1

K/A: GEN2.4.21 10CFR: 43.5

Level: Knowledge

Origin: New Applicability: RO only

References: CSFSTs, OPAP-0002 Objective 13015

Correct Answer: d)

Plausible Distractors:

a. Core cooling (C) is an orange path that comes before any Integrity (P) or Containment (Z) orange path.

b. Containment is a red path but not higher priority than Integrity (P).

c. Subcriticality is the highest priority, however this is an orange path.

85

s. Unanticipated circumstances may occur during the course of emergencies. An accident can take a course different from that visualized when the emergency procedure was written. This could result in actions required by an EOP to be inapplicable for present plant conditions; or it could result in additional actions (not contrary to the EOP) becoming necessary. These actions may be performed provided they do not depart from a license condition or a technical specification (reference 10 CFR 50.54x). Concurrence from all control room team members should be obtained prior to initiating the actions.

t. The following are some examples of actions that may be performed that are not delineated in EOPs (not all inclusive):

   1. Resetting ESF signals to allow securing of damaged equipment.
   2. Securing secondary equipment due to a feed/condensate system break outside of containment.
   3. Actions required to isolate a radioactive gas/liquid release path.
   4. Deenergizing electrical buses due to unisolable faults on the bus.

u. The control room team may take actions necessary to control system parameters within their established operating range (e.g., controlling AFW flow to maintain SG levels within the proper band, adjusting PRZR master controller to maintain RCS pressure, or maintaining RCS Tave at 547°)

6.4.5 **Critical Safety Function (CSF) Status Trees**

CSF Status Trees are normally monitored by the STA. In the event the STA is unavailable, a licensed Operator, as directed by the SRO in charge of Control Room activities, may be assigned to monitor the CSF Status Trees until the STA arrives.

a. Monitoring of the CSF Status Trees shall begin when directed by E-0 or when a transition is made from E-0 and any appropriate FR shall be implemented upon transition from E-0 to any other procedure or when directed by E-0.

b. Monitoring of CSF Status Trees shall be maintained upon transition either to or from any procedure. The only exception to this is when any EOP specifically directs not to perform a FR procedure.

85

c. The CSF Status Trees have different rules of usage than EOPs and are monitored in parallel with the performance of the EOPs.

d. CSF Status Tree monitoring shall be continuous when a RED or ORANGE terminus is encountered.

e. The SRO in charge of the Control Room activities shall be immediately informed if a RED or ORANGE terminus exists. The SRO in charge of the Control Room activities shall also be regularly advised of YELLOW or GREEN plant conditions.

f. The CSF Status Tree shall be entered at the left side of the tree and each question of the tree branch shall be answered based on the existing Unit conditions.

g. Each CSF Status Tree shall be monitored to completion at the tree's terminus.

h. The appearance of a RED or ORANGE path CSF Status Tree usually implies that some Unit equipment is not available or is significantly degraded.

i. If a RED path terminus is encountered, the Recovery Procedure in progress shall be stopped immediately and the Functional Restoration Procedure (FR) required by the RED path terminus performed except in ECA-0.0, the first several steps of ECA-0.1 and 0.2, during ES-1.3, and when ECA-2.1 or other FRs create RED path conditions and procedural transition is not appropriate.

j. If an E, ES, or ECA series EOP is suspended to perform a RED or ORANGE path Functional Restoration Procedure (FR), Operator judgement is required in subsequent procedures to avoid inadvertent reinstatement of a RED or ORANGE path by undoing a critical step of the original FR.

k. If a RED path of higher priority arises during the performance of any RED path FR, then the higher priority path should be addressed first and the lower priority RED path FR suspended unless specifically addressed by the original FR (e.g., FR-C.2, Caution before step 11).

l. If an ORANGE path is encountered, the remaining CSF Status Trees shall be monitored. If a RED path is not encountered, the Recovery Procedures in progress shall be suspended and the FR required by the ORANGE path shall be performed.

m. If a RED path or higher priority ORANGE path arises during the performance of any ORANGE path FR, then the RED path or higher priority ORANGE path should be addressed first and the lower priority ORANGE path FR suspended unless specifically addressed by the original FR (e.g., FR-C.2, Caution before step 11).

n. FRs entered from a RED or ORANGE path shall be performed to completion unless pre-empted by a higher priority path or a loss of all AC power.

o. A YELLOW terminus does not require immediate Operator attention. It is frequently indicative of an off-normal or temporary condition which will be restored to normal by actions that are already in progress.

   1. A YELLOW path may provide an early indication of a developing RED or ORANGE path condition.

   2. For YELLOW path conditions only, the cognizant SRO may decide whether or not to implement any YELLOW path condition FRs. Unit conditions should be evaluated to determine if implementation of the FR is appropriate.

p. After restoration of the CSF Status Trees from a RED or ORANGE path condition, recovery actions may continue when the FR is completed. Usually the FR will return the Operator to the procedure and step in effect. The Operator may be directed to another procedure due to conditions created during performance of the FR.

q. The Recovery Procedures are optimal assuming that equipment is available as required for safety. Some adjustments may be required to the Recovery Procedures because of certain equipment failures.

r. If loss of AC power to the emergency busses occurs and ECA performance begins, none of the FRs can be implemented because none of the electrically powered equipment used to restore a Critical Safety Function will be operable.

   1. A NOTE before Step 1 of ECA-0.0 states "CSFs should be monitored for information only. FRs should not be implemented."

86.
Which ONE of the following items is NOT required to be performed by the relieving Control Room Operator prior to assuming the watch?

a) Verify control board recorders rotating and inking properly.

b) Review the shift orders.

c) Review the instrument out of service log.

d) Check if the "RWST Below Norm" alarm is clear.

K/A: GEN2.1.3 10CFR: 41.10

Level: Knowledge

Origin: NEW Applicability: RO ONLY

References: Unit 1 CRO turnover checklist Objective 13597

Correct Answer: b)

Plausible Distractors:

a,c,d. All are relatively new requirements.

SNSOC APPROVAL: ELECTRONIC DISTRIBUTION- APPROVAL ON FILE DATE: _____ EFFECTIVE DATE: _____

	POWER	MODE
Unit 1:	_____	_____
Unit 2:	_____	_____

PLANT STATUS

Most Limiting Action Statement: LCO/A.S. number: _____

Description: _____

Expiration Time _____ Date _____

Special Plant/System Requirements (levels, pump configuration, valve requirements, power levels, etc.): ☐ No ☐ Yes (if yes, explain below) _____

Periodic Tests in Progress: ☐ No ☐ Yes (if yes, explain below) _____

Automatic functions disabled/bypassed: ☐ No ☐ Yes (if yes, explain below) _____

Open Procedures: ☐ No ☐ Yes (if yes, explain below) _____

TURNOVER

☐ Abnormal Status Log

☐ Instruments Out of Service Log

☐ Action Statement Status Log

☐ Review the Unit 1 Narrative Log since the last watch OR previous 3 days.

☐ Review and explain lighted annunciators on the Main Control Board and Turbine Supervisory Panels. Check RWST BELOW NORM and RWST HIGH LEVEL alarms clear (TS 3.5.5 and 3.1.2.8).

EQUIPMENT STATUS

1-MS-PCV-1464B: Record status of the Steam Dump controller below. IF controller is in Manual OR Pot Setting is NOT as expected, THEN explain in the remarks section:

☐ Auto ☐ Manual Controller output :_____ Pot Setting:_____ (Expected ≈ 7.18)

Record status of Control Rods: ☐ Manual ☐ Auto

Verify the Aux Feed System in AUTO and normal alignment. Explain in the remarks section non-auto or abnormal alignment.

1-MS-TV-111A	☐ Auto	1-FW-P-3B	☐ Auto	1-FW-P-3A	☐ Auto
1-MS-TV-111B	☐ Auto				
1-FW-MOV-100D	☐ Open	1-FW-MOV-100B	☐ Open	1-FW-HCV-100C	☐ Open

Verify the following pumps are in AUTO or IN SERVICE. IF NOT, THEN record the reason in the remarks section.

☐ 1-CC-P-1A ☐ 1-CC-P-1B

Verify proper operation of the Control Board Recorders:

☐ IF any significant evolution or transient occurred during the previous 12 hours, THEN roll back the appropriate chart paper and review trends during the last 12 hours. IF abnormal trends are observed, THEN note the reason on the chart paper and inform the Unit SRO.

☐ Verify the recorder is rotating, inking properly, and that the chart paper is the proper scale. IF NOT, THEN take corrective action.

H TRAIN SAFEGUARDS PANEL

Check the following MOVs OPEN or note the reason for being out of position in the remarks section:

☐ 1-QS-MOV-100A ☐ 1-RS-MOV-156A
☐ 1-RS-MOV-155A
☐ 1-SI-MOV-1890C ☐ 1-SW-MOV-108A
☐ 1-SI-MOV-1864A ☐ 1-SI-MOV-1885A ☐ 1-SW-MOV-102A ☐ 1-SW-MOV-106A
☐ 1-SI-MOV-1862A ☐ 1-SI-MOV-1885C
☐ 1-RS-MOV-101B

Check the following MOVs CLOSED or note the reason for being out of position in the remarks section:

☐ 1-QS-MOV-101A
☐ 1-SI-MOV-1863A
☐ 1-SI-MOV-1860A
☐ 1-SI-MOV-1867C
☐ 1-SI-MOV-1867A ☐ 1-RS-MOV-100A

☐ Verify the SI Accumulator Valve Monitor Light LIT (Tech Spec 4.5.1.a.2).

NOTE: IF the lowest T_C is less than or equal to 235°F, THEN only one Low Head SI pump shall be OPERABLE and the other pump in PULL-TO-LOCK (PTL).

Verify the following pumps are in AUTO or IN SERVICE. IF NOT, THEN record the reason in the remarks section.

☐ 1-QS-P-1A ☐ 1-RS-P-1A ☐ 1-RS-P-2A ☐ 1-SW-P-1A ☐ 1-SW-P-4
☐ 1-SI-P-1A ☐ 1-RS-P-3A

Check the following:

	Fast	Slow	Off	Auto
1-QS-P-2A:	☐	☐	☐	☐

Check the following MOVs CLOSED and power is removed (Tech Spec 4.5.2.a):

☐ 1-SI-MOV-1890A ☐ 1-SI-MOV-1869A

87.
Which ONE of the following identifies the purpose of ensuring RCS pressure is less than 2335 psig during performance of FR-S.1, RESPONSE TO NUCLEAR POWER GENERATION/ATWS?

a) Pressure greater than 2335 psig indicates a loss of adequate heat sink and requires immediate bleed and feed.

b) At pressures greater than 2335 psig inadequate boration delivery to the core may occur.

c) Pressures less than 2335 psig ensures acceptable reactivity void coefficients.

d) Ensures that the RCS remains below all Tech Spec safety limit thresholds.

K/A: SYS004.A2.01 10CFR: 41.5, 43.5

Level: Knowledge

Origin: NEW Applicability: RO only

References: WOG B/G for FR-S.1 Objective 11586

Correct Answer: b)

Plausible Distractors:

a. A sustained loss of heat sink will result in RCS heatup and pressurization once SG inventory is lost. An ATWS is a plausible event to initiate a loss of heat sink.

c. Lower pressure leads to more voids. This is the only distractor which addresses direct core reactivity concerns.

d. 2335 psig is at the PORV setpoint, Safety valves ensure Tech Spec limits are not exceeded.

STEP DESCRIPTION TABLE FOR FR-S.1 STEP 4

STEP: Initiate Emergency Boration of RCS

PURPOSE: To add negative reactivity to bring the reactor core subcritical

BASIS:

After control rod trip and rod insertion functions, boration is the next most direct manner of adding negative reactivity to the core. The intended boration path here is the most direct one available, not requiring SI initiation, but using the normal charging pump(s). Pump miniflow lines are assumed to be open to protect the pumps in the event of high RCS pressure.

Several plant specific means are usually available for rapid boration and should be specified here in order of preference. Methods of rapid boration include emergency boration, injecting the BIT, and safety injection actuation. It should be noted that SI actuation will trip the main feedwater pumps. If this is undesirable, the operator can manually align the system for safety injection. However, the RWST valves to the suction of the SI pumps should be opened first before opening up the BIT valves. If a safety injection is already in progress but is having no effect on nuclear flux, then the BIT and RWST are not performing their intended function, perhaps due to blockage or leakage. In this case some other alignment using the BATs and/or non-safeguards charging pump(s) is required.

The check on RCS pressure is intended to alert the operator to a condition which would reduce charging or SI pump injection into the RCS and, therefore, boration. The PRZR PORV pressure setpoint is chosen as that pressure at which flow into the RCS is insufficient. The contingent action is a rapid depressurization to a pressure which would allow increased injection flow. When primary pressure drops 200 psi below the PORV pressure setpoint, the PORVs should be closed. The operator must verify successful closure of the PORVs, closing the isolation valves, if necessary.

Because the depressurization uses pressurizer PORVs which discharge to the PRT, it is possible for the rupture disc to burst. Isolation of containment ventilation is an expedient action to verify a barrier to radiation release. If containment ventilation has not been automatically isolated, the operator should do so manually.

88.
Health Physics has requested you to start the iodine removal fans (1-HV-F-3A/B). With the control switch placed in the A-B position, which ONE of the following is correct concerning the operation of the fans?

a) The A and B fans will both run continuously.

b) The A fan will be running and the B fan will be in auto-standby.

c) The A and B fans will run alternately as determined by run time with one fan in the lead and the other in backup.

d) The A and B fans will run alternately as determined by filter D/P with one fan in the lead and the other in backup.

K/A: SYS027.A4.01 10CFR: 41.7

Level: Knowledge

Origin: NEW Applicability: RO ONLY

References: 1-OP-21.1 Objective 4489

Correct Answer: a)

Plausible Distractors:

b,c,d. These fans are operated infrequently (very few operators have actually run the fans); all distractors are plausible based on lack of experience operating these fans.

5.5 Placing the Iodine Filtration Fans in Operation

_____ 5.5.1 Verify Initial Conditions are satisfied.

_____ 5.5.2 Review Precautions and Limitations.

* *

CAUTION: Painting (> 100 ft.^{2}), fire, welding, or chemical release must NOT be allowed in any ventilation zone connected with the Iodine filter banks while they are in service. The vapors may degrade the charcoal. **(References 2.4.4, 2.4.5)**

* *

NOTE: Health Physics will have analyzed and determined the concentration of iodine in the Containment atmosphere. Iodine Filtration Fans should be run to prevent exceeding the maximum permissible concentration for iodine.

_____ 5.5.3 At the Unit 1 Ventilation Panel, start the required Iodine Filtration Fan(s) by placing the selector switch in the corresponding position, as follows:

_____ • Position A for 1-HV-F-3A

_____ • Position B for 1-HV-F-3B

_____ • Position A-B for both 1-HV-F-3A and 1-HV-F-3B

_____ 5.5.4 IF Containment is at atmospheric pressure, THEN verify that a pressure drop exists across the Iodine Filters.

Completed: _____ Date: _____

8. Exhaust fans and discharge dampers
9. Ventilation stack "B"

JJJJ. Containment iodine filtration unit components. [4489]

1. To locally determine differential pressure across the containment iodine filter sections there are is a local PDI in the containment basement by each iodine filter bank.

2. The Containment iodine filter and fans HV-F-3A and -3B are controlled by one four-position (FAN A, FAN B, FAN A and FAN B, OFF) selector switch, which is used to control the operation of both fans. This switch is located on the ventilation control panel in the MCR. Red and green operational status lights are provided on the panel for each fan. In the FAN A position 1-HV-F-3A is running, in the FAN B position 1-HV-F-3B is running, in the FAN A and FAN B position both fans run, and in the OFF position all fans are off.

KKKK. Containment purge supply unit. [4492]

1. Interlock conditions required to start a fan

   Handswitch in "ON".

   Air temperature downstream of Containment Purge Supply Unit heating coils greater than 35°F and temperature switch reset locally.

   Either no Hi Hi RMS signal from Unit-1 RM-159, 160 or 162 (Containment Gaseous or Particulate or Manipulator Crane Area) <u>OR</u> MOV-HV-100B (Unit-1 Outside Containment Purge Supply Isolation) fully closed.

89.
The following conditions exist on unit 1:

- A reactor startup is in progress.
- Control bank "C" is at 76 steps.
- Source range counts have stabilized after the second doubling.
- The latest 1/M plot indicates criticality is projected at 110 steps on "C" bank.

Which ONE of the following actions is required of the team?

a) Suspend the 1/M plot and pull rods to criticality.

b) Insert all control banks to zero steps and review the ECP calculation.

c) Borate ≥ 10 gpm and insert all control banks to zero steps.

d) Insert all control banks and rack out the MG set supply breakers.

K/A: GEN2.2.1 10CFR: 45.1

Level: Comprehension

Origin: NEW Applicability: RO ONLY

References: 1-OP-1.5 Objective 10493

Correct Answer: c)

Plausible Distractors:

a. 1/M plot is suspended and rods are pulled to criticality when control rods are within the ECP "window."

b. If criticality is imminent below the ECP lower limit, this would be correct.

d. These are the required actions for another reactivity sensitive event (loss of SR instruments).

Figure A-1

Control Rod Bank Insertion Limits

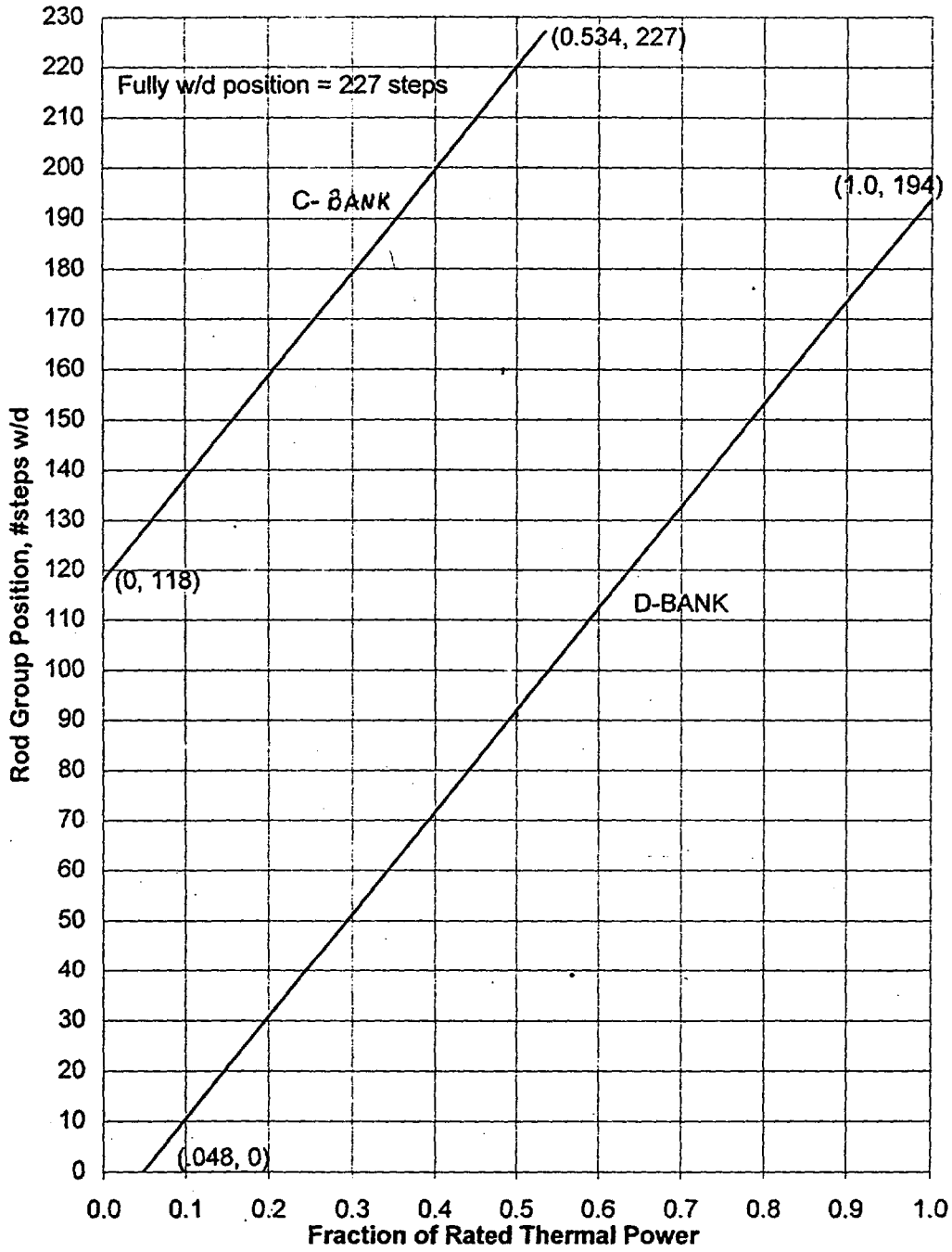

Unit 1 cycle 14

_____ 5.35 Plot the Rod Height information of Step 5.34 on the horizontal axis (0.0) of Attachment 4, 1/M Plot.

_____ 5.36 Record the Rod Height from the Core Operating Limits Report:
Control Rod fully withdrawn position: _____steps **(Reference 2.4.6)**

5.37 Review the following:

_____ 5.37.1 Within 15 minutes of withdrawing any rods in Control Banks A, B, C, or D when approaching Reactor Criticality, the Shutdown Rod Banks must be verified to be fully withdrawn.

_____ 5.37.2 The lowest operable RCS T_{ave} must be at least 541° F within 15 minutes of achieving Reactor Criticality.

_____ 5.37.3 Criticality must be anticipated at any time during a positive reactivity addition.

_____ 5.37.4 A licensed CRO or SRO will always directly control the withdrawal of Control Rods to achieve Criticality.

5.37.5 IF criticality will be achieved with Control Rods below the Rod Insertion Limit, THEN the following must be done immediately:

_____ a. Start a boration of at least 10 gpm and continue until the required SDM is restored.

_____ b. Insert all Control Banks to Zero steps.

_____ c. Notify the Superintendent of Operations or the Operations Manager On Call before continuing.

_____ 5.37.6 WHEN approaching criticality, THEN all attendant instrumentation, such as NIs, NR-45, audio count-rate, annunciators, and IRPIs, must be closely monitored.

5.42 Determine the Reactor status as follows:

* * * *

90.
Which ONE of the following is correct concerning the plant/crew response to removing a first point feedwater heater from service with the unit at 100% power?

a) Reactor power will increase; the crew will have to reduce power to maintain within limits.

b) Reactor power will decrease; the crew will have to raise power to maintain 100%.

c) RCS temperature will increase; the crew will have to reduce temperature to maintain within limits.

d) RCS temperature will decrease; the crew will allow temperature to remain below program until the FW heater is returned to service.

K/A: SYS059.K3.04 10CFR: 41.7/45.6

Level: Comprehension

Origin: NEW Applicability: RO ONLY

References: 1-MOP-31.31A Objective 9129

Correct Answer: a)

Plausible distractors:

b) Misconception concerning the effect of removing a FW heater from service on reactor power.

c) Misconception concerning the effect of removing a FW heater from service on RCS temperature.

d) RCS temperature will decrease, but the crew will control temperature on program.

90

VIRGINIA POWER	PROCEDURE NO: 1-MOP-31.31A	
NORTH ANNA POWER STATION	UNIT NO: 1	REVISION NO: 2
PROCEDURE TYPE: MAINTENANCE OPERATING	EFFECTIVE DATE:	EXPIRATION DATE: N/A

PROCEDURE TITLE:

REMOVING AND RETURNING 1-FW-E-1A TO AND FROM SERVICE

REVISION SUMMARY:

- **NON-UPGRADED PROCEDURE**
- Updated Cover Sheet to latest format. Placed procedure in standard 5 section format. Added Table of Contents and reference for 11715-FM-105B, Secondary plant gas. Added Standard N/A statement as Step 4.1.
- Added new Sections 5.5 and 5.6 to remove and return 1-SD-LCV-103A, 1-FW-E-1A normal level controller, for maintenance. This was done to match the Sections in 1-MOP-31.31B.
- DCP 96-147, Added new Sections 5.7 and 5.8 to remove and return 1-SD-LCV-142A, 1A Feedwater Heater High Level Control Valve, for maintenance, which includes new drain valve, and added same to Purpose. Added DCP to References. Modified Step 3.1 to account for work on 1-SD-LCV-142A.
- Changed all references of tags to read "Danger Tags". Added noun name descriptions to components throughout. Deleted reference to the "Football Tanks". Reformated to current tagging standards.

Writer: Bruce Phaup | **Reviewer:** R. T. Robinson

ELECTRONIC DISTRIBUTION — APPROVAL ON FILE

PROBLEMS ENCOUNTERED: ☐ Yes ☐ No **NOTE:** If yes, note problems in Remarks.

REMARKS:

(use back for additional space)

SHIFT SUPERVISOR: | DATE:

2.3.5 DCP 96-147, Addition of High Level Divert Drain Valves for FW Heater and High Pressure Heater Drain Tank - U1

2.4 Commitment Documents

None

3.0 INITIAL CONDITION

3.1 1-FW-E-1A tube leak or shell side steam leak is indicated or 1-SD-LCV-142A is to be worked.

3.2 Unit 1 is in Mode 1.

4.0 PRECAUTIONS AND LIMITATIONS

4.1 Comply with the following guidelines when marking steps N/A:

- IF the conditional requirements of a step do not require the action to be performed, THEN mark the step N/A.
- IF any other step is marked N/A, THEN have the Shift Supervisor (or designee) approve the N/A and justify the N/A on the Procedure Cover Sheet.

4.2 Direct all water from drains to sump via hoses.

4.3 Wear gloves when handling hoses that are directing water to sump.

4.4 Unit output may have to be reduced to maintain Reactor Power within design limits.

91.
Which ONE of the following is correct concerning methods for limiting the probability of AFW pump runout?

a) A restricting orifice is installed in each pump's discharge piping.

b) A restricting orifice is installed downstream of 1-FW-MOV-100D, AFW to "A" S/G.

c) A throttled manual valve is located on the discharge of each AFW pump.

d) AFW flow is throttled to the minimum required as soon as possible following auto-start of AFW.

K/A: SYS061.K4.04 10CFR: 41.7

Level: Knowledge

Origin: NEW Applicability: RO only

References: NCRODP-26B-LP-1 Objective 10176

Correct Answer: b)

Plausible Distractors:

a) There is a RO installed in each pump's full-flow recirc piping.

c) There is a throttled manual valve on the full-flow recirc piping for each pump.

d) AFW flow is throttled to minimum fairly soon after auto-start, but not to prevent AFW pump runout.

3. Discharge line-up Motor-Driven AFW Pumps

The discharge of each motor-driven AFW pumps is required to be lined up to only one steam generator to meet T. S. independent flow path requirements. (Out of position MOVs or HCVs will cause annunciators in the Control Room to alarm which prevents the generic problem of isolated aux. FW pumps.)

FW-P-3A is normally lined up to C steam generator via HCV-FW-100C (200C).

FW-P-3B is normally lined up to B steam generator via MOV-FW-100B (200B).

The discharge of each pump may be lined up to any steam generator by opening locked-closed manual isolation valves. (Covered by AP-22.)

A mini-flow recirculation line from the discharge of each pump returns approximately 20 gpm to the ECST.

There are two discharge headers for the motor-driven AFW pumps. The steam driven AFW pump can also be lined-up to either discharge header, but these lines are normally isolated (steam driven AFW pump normally flows to "A" S/G through MOV-100D).

The pressure control valves are set to maintain the discharge pressure in the headers at a minimum of 900 psig. A pressure transmitter upstream of the PCV positions each PCV. (Annunciates in Control Room if not open following 20 sec T/D after pump start.)

During normal AFW operation, header pressure will be greater than 900 psig and the PCV will be fully open.

If a line break occurs downstream of the PCV, the discharge pressure of the pump will begin to decrease and pump flow rate and amps will increase. The PCV will throttle shut as downstream pressure drops below 900 psig and will prevent the pump from reaching runout conditions.

If a line break occurs upstream of the PCV, the discharge pressure of the pump will decrease and pump flow rate and amps will increase. Since the PCV is downstream of the break, it will not be able to prevent the pump from reaching runout conditions [10176]

Downstream of the PCVs the discharge headers branch into three lines, one line for each steam generator. Flow from one discharge header to each steam generator is controlled by three motor-operated valves (MOV). Flow from the other discharge header to each S/G is controlled by three hand-controlled valves (HCV).

The position of each MOV and HCV is remotely controlled from benchboard #2 in the main control room or from the Auxiliary Shutdown Panel as selected by a LOCAL/REMOTE switch at the ASDP for each MOV and HCV. Each MOV is powered from an emergency power supply.

Each HCV and PCV receives air from safety related instrument lines and has an air receiver to provide a supply of air in the event of a loss of instrument air. Each HCV and PCV fails open on a loss of instrument air.

AFW line to each steam generator contains a check valve prior to connection with the MFW line. The check valve prevents back flow. The connection to the MFW line is outside of containment and downstream of

the check valve in the MFW line.

4. Discharge of Steam-Driven AFW Pump

The discharge of the steam-driven AFW pump is required to be lined up to one steam generator and is normally lined up to A steam generator through MOV-FW-100D.

The discharge of the pump may be lined up to both motor-driven AFW pumps discharge headers by opening locked-closed manual isolation valves (AP-22).

A mini-flow recirculation line from the discharge of the pump returns approximately 35 gpm to the ECST.

A relief valve RV-FW-100 (1400 psig) is provided in the discharge line of the steam-driven AFW pump to prevent overpressurization of the system due to a failure of the turbine governor. (Relieves to ground outside pump room.)

Flow to A steam generator from the steam-driven AFW pump is controlled by a MOV-FW-100D.

The position of MOV-FW-100D is remotely controlled from benchboard #2 in the main control room or from the Auxiliary Shutdown Panel.

MOV-FW-100D is powered from an emergency power supply.

A restricting orifice is located downstream of MOV-FW-100D. The orifice is designed to prevent pump runout if a line break occurs downstream of the orifice. When a pressure of 1005 psig exists in the steam generator, flow is approximately 450 gpm.

92.
Following declaration of a Site Area Emergency, the on-shift fire team members will initially do which ONE of the following?

a) Report to the OSC and respond as directed by the OSC director.

b) Report to the MCR and respond as directed by the Station Emergency Manager.

c) Report to the TSC and respond as directed by the Station Emergency Manager.

d) Report to the LEOF and respond as directed by the Recovery Manager.

K/A: GEN2.4.29 10CFR: 43.5

Level: Knowledge

Origin: New. Applicability: RO ONLY

References: NPSEPT-1-LP-2 Objective "A" (NPSEPT lesson plan)

Correct Answer: b)

Plausible Distractors:

a. The augmented Ops personnel, some of whom will serve as Fire Team members, report to the OSC.

c. All fire actions would be directed from the TSC. Reporting to the TSC is not done to minimize congestion in the TSC.

d. LEOF is manned following any declaration of Alert or higher; some functions are assumed by the Recovery Manager, but not direction of the fire brigade.

2. The Operations organization does not have a specific response team as does the other segments of the Emergency Response Organization.

3. The onshift operators remain as normal, except for these initial changes:

   a. The Shift Supervisor or an Assistant Shift Supervisor serves as the interim Station Emergency Manager.

      (1) The interim SEM will enter EPIP-1.01, Emergency Manager Controlling Procedure.

      (2) The interim SEM will also ensure that Health Physics has initiated EPIP-4.01, Radiological Assessment Director Controlling Procedure.

The five local governments are:
North Anna: Louisa, Spotsylvania, Caroline, Orange, and Hanover.
Surry: Surry, Isle of Wright, James City, Williamsburg, and Newport News.

   b. Two operators serve as the onshift Emergency Communicators. One assumes the State and local governments communication functions. This communicator will be supplying approved information to the State Department of Emergency Services and the local governments who fall within a 10 mile radius, referred to as the Emergency Planning Zone (EPZ), of the Station. The other communicator assumes the responsibility of transmitting approved information to the NRC.

   c. The onshift Shift Technical Advisor will be directed to report to the Control Room.

G. Duties of the Augmented Operations Personnel

1. Augmenting station operations personnel will report to the primary OSC until instructed by the Shift Supervisor/SEM to perform a required emergency function.

2. An operator serves as the Fire Team Scene Leader, and additional operators serve as Fire Team members.

3. If needed, an operator may serve as a Damage Control Team member.

4. An operator certified as either an EMT or EVOC driver may be assigned to either the on-shift or the reserve the First Aid Team.

5. Onshift or augmented operators may serve as Control Room or Technical Support Center phonetalkers to aid in communications and to maintain the TSC Plant Status Board.

6. Operators may be needed to serve as TSC Emergency Communicators.

The Instructor may wish to display T-2.9. Review the following information with the trainees.

93.
During a steam break on unit 1, the operator at the controls is unable to close the "A" MSTV using the safeguards panel pushbuttons. She immediately attempts the "FIRE EMERG CLOSE" control switch on the benchboard, but this also fails.

Which ONE of the following identifies another location at which closure can be attempted?

a) Unit 1 auxiliary shutdown panel.

b) Unit 1 appendix-R isolation panel.

c) Unit 2 appendix-R isolation panel.

d) Key switch panel in U-1 cable vault.

K/A: GEN2.1.30 10CFR: 41.7

Level: Knowledge

Origin: NEW Applicability: RO ONLY

References: NCRODP-23A-LP-1 Objective 4068

Correct Answer: b)

Plausible Distractors:

a. Location of most controls for a fire condition.

c. The ex-core flux monitors are transferred to backup power from a panel in the opposite unit ESGR.

d. This is the location of the SG PORV key switches.

9. Main Steam Trip Valves (TV-MS-101A,B,C)

a. This a 32" swing check valve which is installed in the backwards position. The disc is held out of the steam flow by the air pistons.

b. It is designed to close rapidly in the event of a main steam line break. It minimizes the steam generator blow down.

c. On a close signal, air is bled off from the pistons, allowing the disc to fall into the steam flow. Steam forces the valve shut.

d. The air pistons act as a dashpot to cushion the impact somewhat. Rupture discs are in place at the bottom of the air cylinder to relieve the over pressure in the cylinder generated when steam flow forces the valve shut. This protects the operating shafts which would otherwise be bent.

e. Closure is initiated by:

(1) Intermediate Hi-Hi containment pressure.

(2) High steam flow in 2/3 lines coincident with low steam pressure in 2/3 lines or low-low T_{avg} in 2/3 loops.

(3) Manually, by pushbutton.

f. Re-opening is accomplished when:

(1) Air pressure is available.

(2) Pressure across the valve is equalized.

(3) The automatic closure signal no longer exists.

(4) Both train A and B open pushbuttons are depressed (no need to simultaneously depress buttons). [10091]

g. Testing

(1) Is no longer done while at power because the valves may be caught by the steam stream and shut completely. Then we are no longer at power.

(2) Test by pushbutton initiation and timing the valve closure. They must close within five (5) seconds.

h. Appendix "R" closure modifications

(1) A fire in the Control Room or the Emergency Switchgear Room could lead to a failure of automatic or manual control circuits of the MSTVs such that the ability to close one or all of the valves is lost.

(2) This failure could result in a loss of steam generator inventory and/or an uncontrolled cooldown of the reactor coolant system.

(3) To resolve this possible condition a dedicated closure system for the MSTVs that will operate independent of the existing MSTV System was developed. The new system consists of two solenoid operated valves mounted in series with the existing trip solenoid valves.

(4) One of the new solenoid valves on each MSTV is controlled from the MCB using a dual action (turn and push down) control switch located just below the Feed Reg. bypass valve controllers. For a postulated fire in the Emergency Switchgear Room or at any time you are unable to close the MSTVs using the normal close pushbuttons, all three MSTVs can be simultaneously closed using this switch. When the APPENDIX "R" control switch is in the emergency close position and depressed, a seal in contact keeps the valves closed when the control switch is released as long as it is left in the emergency close position. When placing the Main Steam System in service during a unit startup, the operators must ensure this switch is placed in the normal position prior to attempting to open the MSTV's. If the valves are given an open signal with the switch in the emergency close position, the valves will remain closed. However, if the switch is subsequently returned to the normal position with the open signal still present, then the valves may open when the ΔP across the valves approaches approximately 4 psi. [6557]

(5) The other new solenoid valve on each MSTV is controlled from the APPENDIX "R" PANEL located in the Emergency Switchgear Room behind the Auxiliary Shutdown Panel. For a postulated fire in the Control Room or at any time you are unable to close the MSTVs from the Control Room, all three MSTVs can be simultaneously closed using this switch.

(6) Control power for these Appendix "R" SOVs is supplied from separate 24 volt battery chargers.

b. Setpoint is controlled by the operator manipulating a controller on the main board. Half-station controllers in the auxiliary shutdown panel can be used during control room evacuations to position each PORV.

c. Normally set at 1035 psig, a point below the setpoint of the lowest SG safety valve. This avoids "perking" the safety.

d. Capacity is 425,244 lbm/hr or ~10% of steam flow from a single SG at 100% RTP.

e. Also used for controlled cool down when the condenser steam dumps are not available.

f. Valves can be manually opened or closed with a handwheel. Wheel moves a collar on the valve stem which acts on an upper or lower shoulder to force the valve open or closed.

g. Three Appendix "R" key operated switches (one for each PORV) are located in the Electrical Penetration area. They operate independently of the normal valve controls to ensure the operators ability to close these valves in the event of a fire in the Emergency Switchgear Room or the Control Room.

h. The PORVs can also be operated from the Auxiliary Shutdown Panel by placing the appropriate Local/Remote selector switch to the Remote position and manually adjusting the HIC (hand indicating control valve) for each PORV.

7. Decay Heat Release Valve (HCV-MS-104)

94.
During a large break LOCA, CDA fails to actuate automatically OR manually.

Which ONE of the following actions is performed to ensure the **DESIGN FUNCTION** of the containment depressurization actuation is met?

a) Secure all three reactor coolant pumps.

b) Start and align the quench spray pumps.

c) Secure all three containment air recirculation fans.

d) Secure the "A" containment instrument air compressor.

K/A: SYS013.K3.03 10CFR: 41.7/45.6

Level: Comprehension, the implications of failing to perform each action must be compared to a knowledge of the intent of containment depressurization actuation (CDA).

Origin: NEW Applicability: RO ONLY

References: Obj 5961 CDB, E-0 CAP Objective 5961

Correct Answer: b)

Plausible distractors:

a,c,d All are actions that are taken when a CDA is required, but none support the design basis for CDA.

5961 Describe the design bases for the Containment Depressurization System.

The quench spray system in conjunction with the recirculation spray system:

Depressurize the containment to subatmospheric pressure within one hour following a design basis LOCA or MSLB

Remove iodine from the containment atmosphere following a LOCA

Control the pH of the water in the containment sump

CONTINUOUS ACTION PAGE FOR 1-E-0

1. ADVERSE CONTAINMENT CRITERIA
   IF either of the following conditions exist, THEN use setpoints in brackets:
   - 20 psia Containment pressure, OR
   - Containment radiation has reached or exceeded 10^5 R/hr (70% on High Range Recorder).

2. RCP TRIP CRITERIA
   IF both conditions listed below exist, THEN trip all RCPs:
   - Charging Pumps - AT LEAST ONE RUNNING AND FLOWING TO RCS, AND
   - RCS subcooling based on Core Exit TCs - LESS THAN 20°F [65°F].

3. CHARGING PUMP RECIRC PATH CRITERIA
   - IF RCS pressure decreases to less than 1275 psig [1475 psig] AND RCPs tripped, THEN close Charging Pump Recirc Valves.
   - IF RCS pressure increases to 2000 psig, THEN open Charging Pump Recirc Valves.

4. SI ACTUATION CRITERIA
   IF either condition listed below occurs, THEN manually initiate both trains of SI AND GO TO 1-E-0, REACTOR TRIP OR SAFETY INJECTION, STEP 1:
   - RCS subcooling based on Core Exit TCs - LESS THAN 25°F [75°F], OR
   - PRZR level - CANNOT BE MAINTAINED GREATER THAN 11% [40%].

5. ECST LEVEL CRITERIA
   WHEN the ECST level decreases to 40%, THEN initiate 1-AP-22.5, LOSS OF EMERGENCY CONDENSATE STORAGE TANK 1-CN-TK-1.

6. CDA ACTUATION CRITERIA
   IF Containment pressure exceeds 28 psia on 1-LM-PR-110B, THEN do the following:

   a) Manually actuate both trains of CDA.

   b) Ensure CC Pumps STOPPED.

   c) Stop all RCPs.

   d) Ensure QS Pumps RUNNING.

   e) Ensure QS Pump Discharge MOVs OPEN.

   f) Initiate Attachment 2.

1. VERIFY THE FOLLOWING AUTOMATIC OPERATIONS ON THE "H" SAFEGUARDS PANEL (Continued):

NOTE: Time delays are provided for the automatic starting of Recirc Spray Pumps.

e) Verify Recirc Spray - ALIGNED AND RUNNING — Manually do operations as indicated.

RUNNING (RED)	RUNNING (RED)	OPEN (RED)
__1-RS-P-1A (3 1/4 min.T.D.)	__1-RS-P-2A (3 1/2 min.T.D.)	__1-RS-MOV-156A
		__1-RS-MOV-155A

f) Verify Casing Cooling - ALIGNED AND RUNNING — Manually do operations as indicated.

RUNNING (RED)	OPEN (RED)	OPEN (RED)
__1-RS-P-3A	__1-RS-MOV-100A	__1-RS-MOV-101B

2. __ STOP 1-IA-C-2A, A CONTAINMENT INSTRUMENT AIR COMPRESSOR, BY PRESSING OFF BUTTON

95.
Which ONE of the following identifies how a LOSS of DC control power affects the operation of the reactor trip breakers?

a) The shunt coil will deenergize, automatically tripping the associated breaker.

b) No power is available for the field inputs to generate a trip signal (for the associated train reactor trip breaker only).

c) The UV coil will deenergize, automatically tripping the associated breaker.

d) Manual trip is the only available means to trip (for the associated train's reactor trip breaker only).

K/A: SYS001.K6.03 10CFR: 41.7/45.7

Level: Comprehension, ability to recognize relationship between DC power and breaker response required.

Origin: NEW Applicability: RO ONLY

References: NCRODP-65-LP-2 Objective 12007

Correct Answer: c)

Plausible distractors:

a) If the shunt were mistaken to function like the UV this would be plausible.

b) The field input contacts are "B" contacts and a loss of input would cause a trip.

d) Manual operation from the MCR requires DC control power.

CLOSE

1. Reset switch on the main control board. (Benchboard 1-1)*{NLO OBJ 6506}*

NOTE: Make sure that the trainees understand that only one of the switches on the control board has this closure ability.

2. Locally at the switchgear

   a. Manual close handle for the trip breakers
   b. Electrical close pushbutton for the bypass breakers located on the front of the breakers in the Rod Drive Room.*{NLO OBJ 6547}*

4. Each of the four breakers contains a closing coil, a trip coil, an undervoltage (UV) coil. The closing coils receive 125 VDC control power from Main Board DC Panels 1A (52/RTA and 52/BYB) and 1B(52/RTB and 52/BYA).

5. The trip breakers will trip open when either the UV coil loses its 48V signal from SSPS, or the shunt trip coil (SHTR) is energized.

   a. The UV coil associated with Breakers RTA and BYB are operated by any of the signals from SSPS Logic Train A. Logic A also operates the shunt trip for RTA.

   b. The UV coil for RTB and BYA are operated by Logic Train B. Logic B also operates the shunt trip for RTB.

c. The shunt trip coils and UV coils associated with the reactor trip breakers are also operated by manually tripping the reactor or by manually initiating safety injection.

Manual A RTA and BYB (directly for shunt)
Manual B RTB and BYA (directly for shunt)

Also: Manual A SSPS Logic Train A breakers in (A) above.
Manual B SSPS Logic Train B breakers in (B) above.

Point out to the trainees that this arrangement of trip signals to the UV and Shunt coils came about due to the Anticipated Trip Without Scram (ATWS), that occurred at the Salem Power Station, where the Trip breakers failed to open automatically when required due to failure of the UV trip coils. The automatic and manual trip logic signals now hit the Shunt Trip Coils, as well as, the UV Trip Coil. (Design Change Number 84-04.) Refer to SOER 83-8.

E. Control and Monitoring Cabinets - Cabinets within the Rod Control System supply control signals for positioning of the control rods and the indication of rod position, and can also supply an alternate source of power to the CRDM station coils during maintenance operations.

1. The primary purpose of the control and monitoring cabinets is to control the operation of the control rod drive mechanisms, which position the control rods within the reactor core. The cabinets provide the following additional functions:

a. remote and local alarms,

b. remote and local indications,

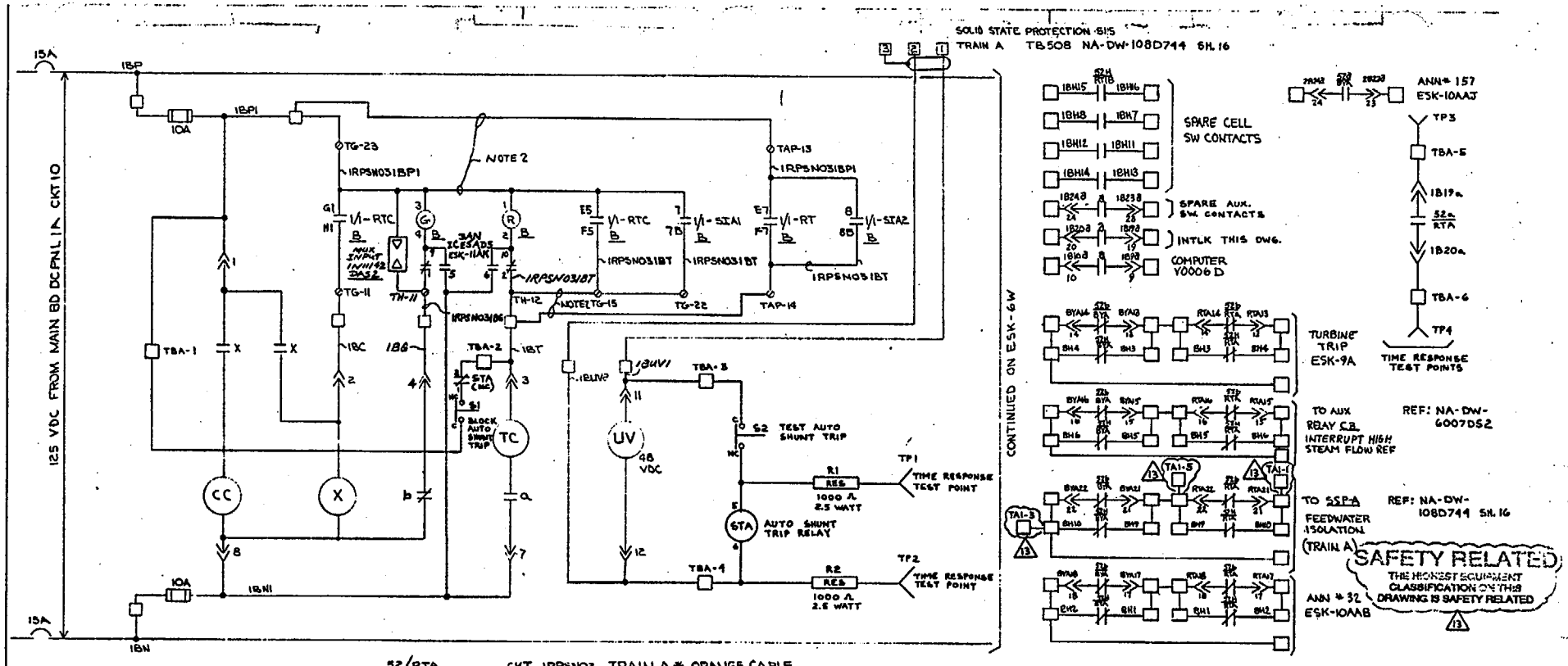

52/RTA (SWGR CELL 1B) CKT 1RPSN03 TRAIN A* ORANGE CABLE

SEL SW	CONT DIAG	ESK
1/1RT	BP	3H
1/1RTC	BJ	3H
1/1-SIA1	BB-1	3F
1/1-SIA2	BB-1	3F

NOTE:
1. REFER TO (W) DWG 6011040 (S&W 11715/12050-L27-151)
2. CABLES FROM BENCH BOARD 1-1 & 1-2 MUST BE RUN IN SEPERATE CABLES OUT TO SWGR THEN TERMINATED
3. SWITCHES ARE COMMON TO TRAIN B WITH APPROPRIATE BARRIERS FOR ISOLATION

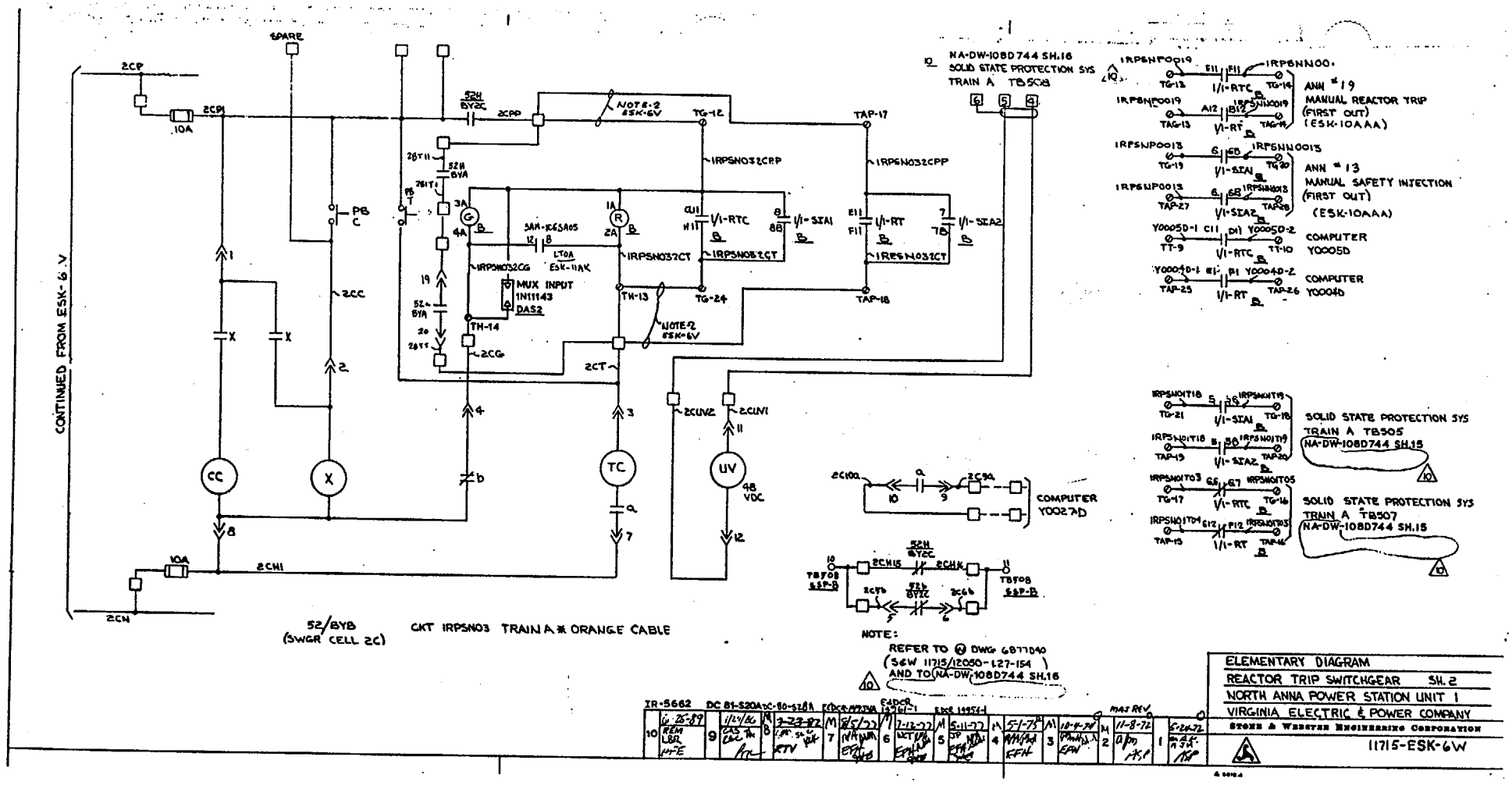
CONTINUED FROM ESK-6V
SPARE
2CP
2CP1
.10A
52H BYZC
2CPP
NOTE-2 ESK-6V
TG-12
TAP-17
1RPSN032CPP
1RPSN032CPP
PB T
PB C
2CC
CC
X
TC
UV
48 VDC
2CUV2
2CUV1
2CT
TH-13
TG-24
TAP-18
TH-14
2CG
1RPSN032CG
1RPSN032CT
1RPSN032CT
MUX INPUT 1N111143 DAS2
LT0A ESK-11AK
1/1-RTC
1/1-SIA1
1/1-RT
1/1-SIA2
2CH1
10A
2CN
52/BYB (SWGR CELL 2C)
CKT 1RPSN03 TRAIN A & ORANGE CABLE
NA-DW-108D744 SH.16 SOLID STATE PROTECTION SYS TRAIN A TB508
1RPSNP0019
1RPSNN00
ANN #19 MANUAL REACTOR TRIP (FIRST OUT) (ESK-10AAA)
1RPSNP0013
1RPSNN0013
ANN #13 MANUAL SAFETY INJECTION (FIRST OUT) (ESK-10AAA)
Y0005D-1
Y0005D-2
COMPUTER Y0005D
Y0004D-1
Y0004D-2
COMPUTER Y0004D
SOLID STATE PROTECTION SYS TRAIN A TB505 NA-DW-108D744 SH.15
SOLID STATE PROTECTION SYS TRAIN A TB507 NA-DW-108D744 SH.15
2C10A
2C9A
COMPUTER Y0027D
2CH15
2CH16
TB508 SSP-B
2C9b
2C6b
NOTE:
REFER TO DWG 6877D40 (S&W 11715/12050-L27-154) AND TO NA-DW-108D744 SH.16
ELEMENTARY DIAGRAM
REACTOR TRIP SWITCHGEAR SH. 2
NORTH ANNA POWER STATION UNIT 1
VIRGINIA ELECTRIC & POWER COMPANY
STONE & WEBSTER ENGINEERING CORPORATION
11715-ESK-6W

BUS/MCC MARK NO.: 1-EP -CB -23A DESCRIPTION: MCB 125V DC DIST PANEL 1

LOCATION: UNIT 1 CONTROL ROOM HATHAWAY ROOM REFERENCE: 11715-FE-18M

ER SUPPLY: 1-EP-CB-12A BREAKER #17 (DC VITAL BUS 1-I)

BREAKER NO.	MARK NUMBER	DESCRIPTION
1	1-MS -TV -111A	TURBINE DRIVEN AFW PUMP STEAM SUPPLY VALVE ****CAUTION: OPENING THIS BREAKER WILL FAIL OPEN 1-MS-TV-111A****
2	1-CH -HCV -1200A	'A' LETDOWN ORIFICE ISOLATION VALVE
3	1-CH -HCV -1200B	'B' LETDOWN ORIFICE ISOLATION VALVE
4	1-CH -HCV -1200C	'C' LETDOWN ORIFICE ISOLATION VALVE
5	1-RC -TV -1519A	PG WTR TO CONTAINMT (AUX BLDG SIDE)
6	1-EI -CB -95	CHEM FEED PANEL ANN.
7	1-FW -SOV -1479-1	'A' S/G MAIN FEED REG. BYPASS
	1-FW -FCV -1479	'A' S/G MAIN FEED REG. BYPASS
	1-FW -SOV -1489-1	'B' S/G MAIN FEED REG. BYPASS
	1-FW -FCV -1489	'B' S/G MAIN FEED REG. BYPASS
	1-FW -SOV -1499-1	'C' S/G MAIN FEED REG. BYPASS
	1-FW -FCV -1499	'C' S/G MAIN FEED REG. BYPASS
8	1-FW -SOV -1478-1	'A' S/G MAIN FEED REG. VALVE
	1-FW -FCV -1478	'A' S/G MAIN FEED REG. VALVE
	1-FW -SOV -1488-1	'B' S/G MAIN FEED REG. VALVE
	1-FW -FCV -1488	'B' S/G MAIN FEED REG. VALVE
	1-FW -SOV -1498-1	'C' S/G MAIN FEED REG. VALVE
	1-FW -FCV -1498	'C' S/G MAIN FEED REG. VALVE
9	1-MS -SOV -1408A-1	MAIN STEAM DUMP VALVE TO CONDENSER
	1-MS -SOV -1408B-1	MAIN STEAM DUMP VALVE TO CONDENSER
	1-MS -SOV -1408C-1	MAIN STEAM DUMP VALVE TO CONDENSER
	1-MS -SOV -1408D-1	MAIN STEAM DUMP VALVE TO CONDENSER
	1-MS -SOV -1408E-1	MAIN STEAM DUMP VALVE TO CONDENSER
	1-MS -SOV -1408F-1	MAIN STEAM DUMP VALVE TO CONDENSER
	1-MS -SOV -1408G-1	MAIN STEAM DUMP VALVE TO CONDENSER
	1-MS -SOV -1408H-1	MAIN STEAM DUMP VALVE TO CONDENSER
10		CONTROL POWER FOR "BYB" AND "RTA" REACTOR TRIP BREAKERS
11	1-LO -SOV -600	TURBINE TRIP SOV (ANTI MOTORING, EHC POWER FAILURE, RX BREAKERS)
12		MAIN FW PUMP TRIP INTERLOCK CIRCUIT (STARTS AFW, TB TRIP) ****CAUTION: OPENING THIS BREAKER WILL DEFEAT AN AFW AUTO-START AND TURBINE TRIP SIGNAL ON A LOSS OF ALL MAIN FEEDWATER PUMPS.****
13	1-EP -CB -28A	CONTAINMENT PRESSURE ANN. CIRCUIT
14	1-EP -CB -28C	AUX RELAY CAB SYNCHRONIZER CIRCUIT
15	1-SI -TV -1859	SI ACCUMULATOR TEST LINE OUTSIDE ISOLATION VALVE
16	1-MS -TV -101A	MAIN STEAM LINE TRIP VLV (CONTROL)
	1-MS -SOV -101A-1	MAIN STEAM LINE TRIP VALVE SOV
17	1-MS -TV -101B	MAIN STEAM LINE TRIP VLV (CONTROL)
	1-MS -SOV -101B-1	MAIN STEAM LINE TRIP VALVE SOV
18	1-MS -TV -101C	MAIN STEAM LINE TRIP VLV (CONTROL)
	1-MS -SOV -101C-1	MAIN STEAM LINE TRIP VALVE SOV
19	1-SI -TV -1884A	BIT OUTLET RECIRC VALVE
	1-CH -TV -1884A	**THIS TRIP VALVE IS SOMETIMES

		ALSO REFERRED TO AS 1-CH-TV-1884A IN EITHER MECHANICAL OR ELECTRICAL PRINTS. IN THIS CASE, "SI" IS SYNONOMOUS WITH "CH"***
	1-CH -TV -1204A	LETDOWN ISOLATION VALVE **NOTE** BOTH VALVES HAVE FUSES IN 1-EP-CB-205 LOCATED ABOVE PANEL***
20	1-EP -CB -23A-1	MAIN CONTROL BOARD 125V DC DIST PNL
21	1-EP -CB -28G	MAIN FW PUMP AUTO START INTERLOCK CIRCUIT
22	1-ED -MG -1C	ROD DRIVE MG SET 1-I OUTPUT BREAKER CONTROL POWER
23	1-RC -PCV -1455C	PRESSURIZER PORV (CONTROL & IND.)
	1-RC -PCV -1456	PRESSURIZER PORV (INDICATION ONLY)
24		STATION SERVICE 4160V BUS 1A UV CKT
25		STATION SERVICE 4160V BUS 1B UV CKT
26		STATION SERVICE 4160V BUS 1C UV CKT
27		LOSS OF RESERVE STATION SERVICE POWER CIRCUIT
28	1-DB -P -10A	CHILLER ROOM SUMP PUMP AUX. CIRCUIT
29	1-EP -CB -55	CONTROL ROOM HALON SYSTEM #5
	1-FP -DISC-14	
30	1-EP -CB -90	LP CO2 TANK ALARMS AND MAIN
	1-FP -DISC-11	GENERATOR PURGE CIRCUIT

96.
Which ONE of the following identifies a difference between unit 1 and unit 2?

a) Unit 1 train "B" emergency loads are normally powered from "A" RSST; unit 2 train "A" emergency loads are normally powered from "B" RSST.

b) Common radiation monitors are powered from unit 1 train "B" (1J1-1) or unit 2 train "A" (2H1-1).

c) Unit 1 all rods out is currently 225 steps; unit 2 is currently 227 steps.

d) The turbine-driven AFW pump exhaust radiation monitor for unit 1 is located **outside** the pumphouse; for unit 2, it is located **inside** the pumphouse.

K/A: GEN2.2.3 10CFR: 41

Level: Knowledge

Origin: NEW Applicability: RO ONLY

References: NCRODP-35-LP-2 Objective 5519

Correct Answer: a)

Plausible Distractors:

b. Power supply **can** be switched between the units via a throwover switch.

c. This was true prior to the last refueling outage on unit 1.

d. The turbine-driven AFW pump exhaust R/Ms **are** located differently between the units; the distractor has the locations backwards.

A. Function of the Emergency Electrical Distribution System

1. The AC power system is highly reliable, with redundancy to ensure safe shutdown of the plant while maintaining containment integrity and fuel conditions within acceptable limits. The emergency AC power system for each unit is separated into two redundant and independent systems to provide safety-related equipment with dependable power with the loss of one system. The separated systems are able to be connected to a preferred power source or to a standby power source with no connection between the redundant systems (Unit 1 only).

B. Design Features and Operating Characteristics

1. Transformers - The Emergency Electrical Distribution System receives offsite power from the three RSS transformers during normal plant operations. The RSS transformers are three-phase, forced oil and air cooled 34.5 kV to 4160 VAC transformers and are located west of the intake structure. Automatic tap changers maintain voltage 4000 volts. RSS transformers A and B provide power to emergency buses 1J and 2H through transfer buses D and E. RSS transformer C provides power to emergency buses 1H and 2J through transfer bus F. The cables from RSS transformer C are kept separate from those of A and B to minimize the possibility of a single accident causing the loss of both emergency trains for either unit.

   a. The 4160 VAC emergency buses are fed from the RSS transformers by 4160 VAC cable runs in duct, conduit, and cable tray.

      (1) The first path has cable in duct underground from the RSS transformers A and B to the Turbine Building where it continues in conduit and then in trays to emergency bus feeder breakers 15D1 and 15E1 respectively in 307 switchgear.

      (2) The second path is for the RSS transformer C cables, which run in duct

underground to the Service Building so that they are kept separate from the cable runs of the other two transformers; these cables then continue in conduit and tray to emergency bus feeder breaker 15FI in 307 switchgear.

(a) Feeder breakers 15D1 and 15E1 are separated from breaker 15F1 by the wall separating Unit 1 switchgear from Unit 2 switchgear.

2. Buses

a. Transfer buses D and E are located in the Unit 1 Switchgear Room in the Service Building at elevation 307 feet 3 inches.

(1) Transfer bus F is located in the Unit 2 Switchgear room and is physically separated from D and E by the wall that separates the Unit 1 and 2 Switchgear Rooms.

(2) Each transfer bus has breakers that connect the bus to the following:

a. an RSS transformer (15D1, 15E1, 15F1)

1) One of the several automatic trips of the transfer bus normal feeder breakers is an undervoltage signal (27X) from its respective transfer bus.

2) If a de-energized transfer bus is to be re-energized from the normal feed, then the breaker control switch must be held in CLOSE for 15 seconds to ensure the transfer bus undervoltage relay has reset. If the control switch were to be placed in CLOSE then immediately released, the breaker would close then re-open on undervoltage.[10932]

f. The Unit 2 4160 VAC H and J buses may be interconnected by a breaker that is normally removed from its cubicle, located on the H bus.

(1) The ability to interconnect the two emergency buses provides a second source of power to an emergency bus if the normal source (and diesel) is not available.

(a) This breaker is under strict operational supervision of the station's supervisory staff to prevent inadvertent interconnection of the two emergency trains and is provided for maintenance purposes only.

(b) The Unit 1 emergency bus tie breaker has been removed because the alternate source breakers to normal buses 1B and 2B provide the second source of power to each emergency bus.

g. The 4160 VAC emergency buses provide power to four 480 VAC emergency buses:

1H, 1H1, 1J, and 1J1

(1) 480 VAC emergency bus 1H and 1J are located north of their respective 4160 VAC bus in the Unit 1 Emergency Switchgear and Relay Rooms.

(a) 480 VAC emergency bus 1H1 and 1J1 are located in the Rod Drive Room.

(b) Each of the 480 VAC buses house its own 4160/480 VAC transformer and some major load breakers.

(c) The transformers are cooled by fans that force air circulation through the panel.

97.
During a declared "GENERAL EMERGENCY" you volunteer to perform an action to minimize equipment damage. During the pre-job brief, you are informed you will exceed your normal exposure limits.

Which ONE of the following individuals can approve use of emergency exposure limits?

a) Radiological Assessment Director.

b) Radiological Assessment Coordinator.

c) Emergency Operations Director.

d) Station Emergency Manager.

K/A: GEN2.3.4 10CFR: 43.4

Level: Knowledge

Origin: NEW Applicability: RO ONLY

References: NPSEPT-1-LP-1 Objective D (NPSEPT lesson plan)

Correct Answer: d)

Plausible Distractors:

a. Highest level Health Physics representative in the TSC.

b. Highest level H.P. representative in the LEOF.

c. Highest level Operations Department representative on-site.

1. TSC Staffing

a. The Station Emergency Manager is responsible for:

*(1) Classifying the emergency.

*(2) Notifying NRC and state and local agencies of the emergency status.

*(3) Issuing Protective Action Recommendations (PARs) if a General Emergency is declared.

NOTE: The Recovery Manager will assume off-site communications to state and local agencies and the Protective Action Recommendation requirement once the LEOF is activated.

*(4) Authorizing emergency exposure limits,

(a) Protecting Valuable Property: 10 rem TEDE to save valuable equipment and to limit offsite release.

(b) Lifesaving Activity or Protection of Large Populations: 25 rem TEDE for search and rescue, first aid, and removal of injured personnel where there is reasonable expectation that the individual(s) is(are) alive within the affected area. Also for entry to correct conditions which, if left uncorrected, could result in onsite or offsite injury.

98.
Both units are at 100% power with no equipment out of service (except as noted below).

Which ONE of the following events would initiate an automatic start of the SBO diesel?

a) With "B" RSST out of service, a loss of 34.5 KV bus #4 occurs.

b) With "C" RSST out of service, a loss of 34.5 KV bus #3 occurs.

c) With "A" RSST out of service, a loss of 34.5 KV bus #3 occurs.

d) Spurious trip of breaker 15F1, "F" transfer bus supply.

K/A: GEN2.1.28 10CFR: 41.7

Level: Comprehension, a recognition of system relationships is required to answer this question.

Origin: New Applicability: RO ONLY

References: NLOCT-94.3-LP-2 Objective 10786

Correct Answer: c)

Plausible distractors:

a) Bus #4 supplies two RSSTs; power supplies to emergency busses and RSSTs are illogical and difficult to understand.

b) Bus #3 supplies two emergency busses; power supplies to emergency busses and RSSTs are illogical and difficult to understand.

d) "F" transfer bus supplies two emergency busses

5) After SBO diesel generator is at speed and voltage plus a time delay:

a) SBO generator output breaker automatically closes, energizing the 0M bus.

b) The 05M5 breaker closes, energizing the 4160/480 VAC M1 transformer.

c) The 04M1-2 breaker closes, energizing the 480 VAC 0M1 bus.

NOTE: When operator arrives in SBO Bldg, the SBO diesel generator will be running at minimum load (SBO auxiliary equipment) with 0M bus and 0M1 bus energized.

b. OFF/RESET: Resets transfer bus UV relays used for SBO automatic start.

D. State the interlock conditions which will result in the following:

1. Automatic SBO diesel engine start:

a. Either one of the following two conditions will result in SBO diesel automatic start:

1) Loss of voltage on BOTH "D" transfer bus AND "F" transfer bus for Unit-1 blackout, OR

2) Loss of voltage on BOTH "E" transfer bus AND "F" transfer bus for Unit-2 blackout.

b. Same signal as for Loss Of Reserve Station Service: 2/2 undervoltage sensors on 2/2 transfer busses for a unit.

1) "D" and "F" transfer bus for unit-1

2) "E" and "F" transfer bus for unit-2

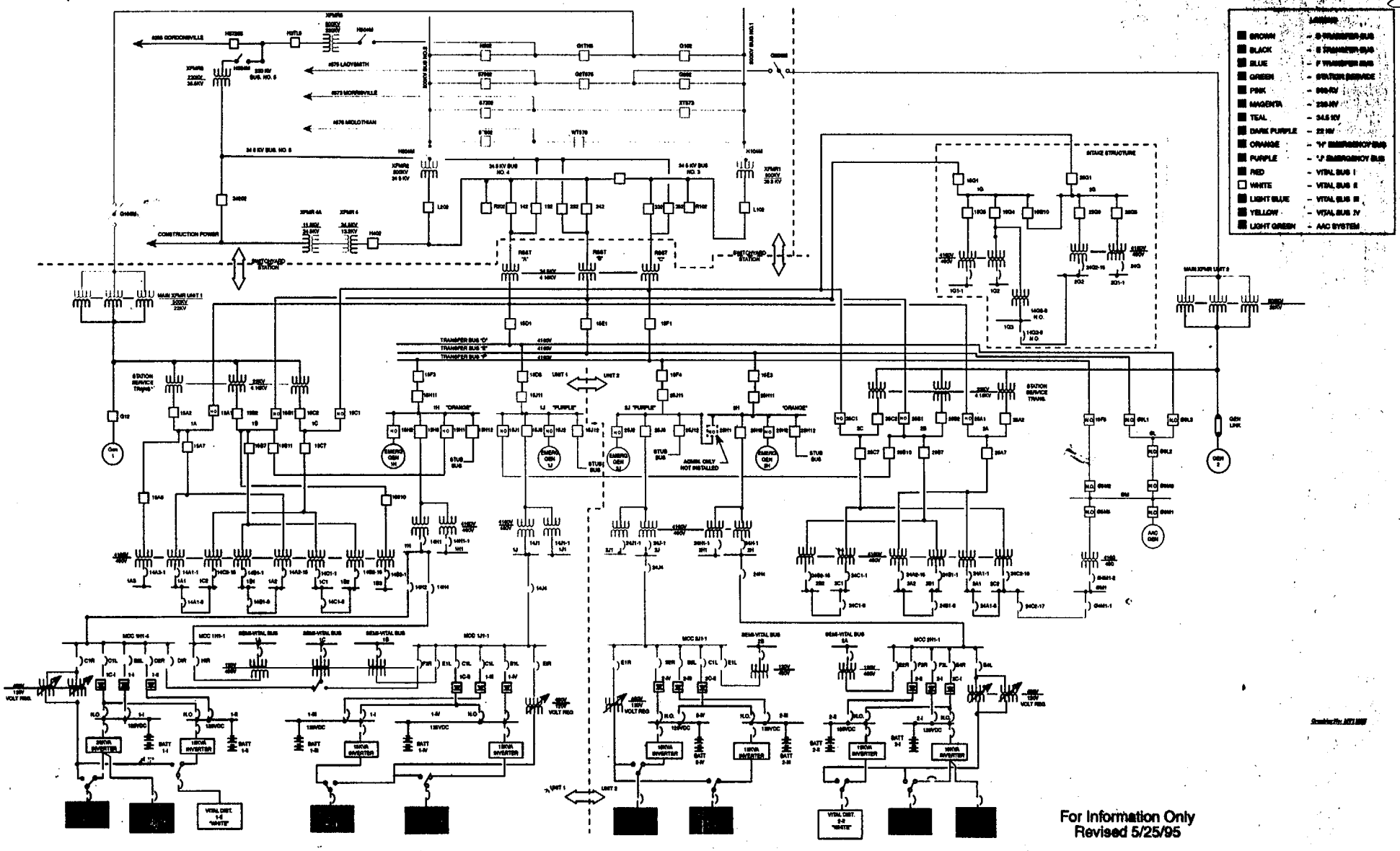

For Information Only
Revised 5/25/95

NORTH ANNA POWER STATION
ELECTRICAL POWER DISTRIBUTION

99.
Which set of procedure's immediate actions are required to be performed in order?

a) FR-S.1, ECA-0.0

b) ECA-0.0, E-0

c) E-0, FR-S.1

d) ECA-0.0, E-0, FR-S.1

K/A: GEN2.4.49 10CFR: 41.10

Level: Knowledge

Origin: NEW Applicability: RO ONLY

References: OPAP-0002 Objective 12115

Correct Answer: c)

Plausible Distractors:

Only three EOPs require immediate actions, 2 of which are required to be performed in order, the distractors are logical combinations.

99

2. Once the system has been reset once, it is not necessary to reposition the reset switches every time a procedure directs a reset. Verify that the applicable status light still reflects the reset condition. If it does not, another reset shall be performed.

e. **Immediate Action Steps**

1. EOP Immediate Action Steps should be performed from memory. Immediate Action Steps are designated by brackets around the individual step number in the applicable procedures (e.g., [1.])

2. The first four Immediate Action Steps of E-0 and the Immediate Action Steps of FR-S.1 shall be performed in sequence or sequentially. All other Immediate Action steps do not have specific step sequence requirements.

3. Immediate Action Steps that have been performed shall be verified when the EOP is entered.

f. **Completion of Actions**

1. A required action does not need to be fully completed before proceeding to the next step. It is sufficient to initiate an action and verify that it is progressing satisfactorily and then proceed to the next step. This ensures efficient implementation of time consuming steps.

2. If a step is required to be completed prior to proceeding to the next step, a preceding NOTE shall explicitly state the requirement.

3. A required action that is in progress does not need to be completed prior to making a transition to another EOP, but the completion of the action is still required.

g. If all expected actions and responses are obtained, only the AER column action steps should be performed.

h. If the expected action or response is not obtained or the action cannot be performed, the instructions of the RNO column should be performed.

i. If a contingency action is not provided in the RNO column, then the Operator should proceed to the next step or substep in the AER column.

100. (Reference provided)
The following conditions exist on unit 1:

- Unit is in mode 5.
- "B" RHR pump is in service and "A" RHR pump is available.
- Both RHR heat exchangers are in service with 500 gpm CC flow through each H/X.
- The instrument air supply pipe to 1-CC-TV-103B, RHR CC return, is accidentally broken off.

Which ONE of the following is correct concerning the response to these conditions?

a) RHR pump seal cooling is lost to **BOTH** RHR pumps; flow can be restored by closing 1-CC-MOV-100B.

b) RHR pump seal cooling is lost to "B" RHR pump **ONLY**; flow can be restored by closing 1-CC-MOV-100B.

c) RHR pump seal cooling is lost to **BOTH** RHR pumps; flow cannot be restored unless 1-CC-TV-103B is opened.

d) RHR pump seal cooling is lost to "B" RHR pump **ONLY**; flow cannot be restored unless 1-CC-TV-103B is opened.

K/A: SYS008.A2.05 10CFR: 41.5, 43.5

Level: Comprehension

Origin: NEW Applicability: RO ONLY

References: FM-79B, AR-E-B6 Objective 418

Correct Answer: a)

Plausible Distractors:

b. Logical for the "B" pump to lose cooling if the "B" H/X return closes.

c. This was true until a recent modification cross-tied the CC return piping downstream.

d. Logical for the "B" pump to lose cooling if the "B" H/X return closes.

RHR PP 1B COOLING WTR LO FLOW	< 5 GPM Seal Cooling

1.0 Probable Cause
- 1.1 1-CC-TV-103A AND 1-CC-TV-103B closed
- 1.2 1-CC-TV-103A OR 1-CC-TV-103B closed with the associated RHR CC MOV open
- 1.3 Rupture OR leakage in CC piping
- 1.4 Faulty flow switch

2.0 Operator Action

ACTION/EXPECTED RESPONSE	RESPONSE NOT OBTAINED
2.1 CHECK 1-CC-TV-103A AND 1-CC-TV-103B - OPEN	2.1 Open trip valve(s), 1-CC-TV-103A and 1-CC-TV-103B. IF both CC Trip Valves cannot be opened, THEN close the RHR CC MOV, 1-CC-MOV-100A OR 1-CC-MOV-100B, associated with the closed trip valve.
2.2 CHECK RHR SYSTEM	
a. RHR - REQUIRED	a. GO TO Step 2.3.
b. Check CC to RHR HXs - AVAILABLE	b. Monitor RCS temperature. If either of the following occur, and no secondary heat sink is available, GO TO 1-AP-11, LOSS OF RHR. * RCS temperature > 140°F OR * CC not available > 10 min.
c. Monitor seal cooler outlet temperature - LESS THAN 140°F. (T0611A)	c. Start the standby RHR pump using 1-OP-14.3 AND monitor its temperature (T0610A). If both pumps are affected, stop the pumps AND GO TO 1-AP-11, LOSS OF RHR.

* *

CAUTION: If CC leakage is suspected, LW releases should be stopped until samples have been analyzed.

* *

2.3 CHECK CC PIPING - NOT LEAKING *CC Head Tank level *Containment Sump level	If piping is leaking, do the following: a. Isolate the leak. b. If leak cannot be isolated, RETURN TO Step 2.2.
2.4 CHECK ALL PARAMETERS - NORMAL * RCS temperature * RHR pump temperature * CC Head Tank Level	RETURN TO Step 2.2.
2.5 SUBMIT REQUIRED WRs	

3.0 References
- 3.1 11715-ESK-10AAX
- 3.2 11715 FM-79A, B
- 3.3 NAPS Instrumentation Manual, Page CC-023

3.4 Unit 1 Technical Specifications
3.5 1-AP-11
3.6 DCP 98-107, CC Return Cross Tie Actuation
4.1 1-CC-FS-131B

RHR PP 1A COOLING WTR LO FLOW	< 5 GPM Seal Cooling

1.0 Probable Cause
- 1.1 1-CC-TV-103A AND 1-CC-TV-103B closed
- 1.2 1-CC-TV-103A OR 1-CC-TV-103B closed with the associated RHR CC MOV open
- 1.3 Rupture OR leakage in CC piping
- 1.4 Faulty flow switch

2.0 Operator Action

ACTION/EXPECTED RESPONSE	RESPONSE NOT OBTAINED
2.1 CHECK 1-CC-TV-103A AND 1-CC-TV-103B - OPEN	2.1 Open trip valve(s), 1-CC-TV-103A and 1-CC-TV-103B. IF both CC Trip Valves cannot be opened, THEN close the RHR CC MOV, 1-CC-MOV-100A OR 1-CC-MOV-100B, associated with the closed trip valve.
2.2 CHECK RHR SYSTEM	
a. RHR - REQUIRED	a. GO TO Step 2.3.
b. Check CC to RHR HXs - AVAILABLE	b. Monitor RCS temperature. IF either of the following occur, AND no secondary heat sink is available THEN GO TO 1-AP-11, LOSS OF RHR. * RCS temperature > 140°F OR * CC not available > 10 min.
c. Monitor seal cooler outlet temperature - LESS THAN 140°F. (T0610A)	c. Start the standby RHR pump using 1-OP-14.3 AND monitor its temperature (T0611A). IF both pumps are affected, THEN stop the pumps AND GO TO 1-AP-11, LOSS OF RHR.

* * * *

3.3 NAPS Instrumentation Manual, Page CC-023
3.4 Unit 1 Technical Specifications
3.5 1-AP-11
3.6 DCP 98-107, CC Return Cross Tie Actuation
4.1 1-CC-FS-131A

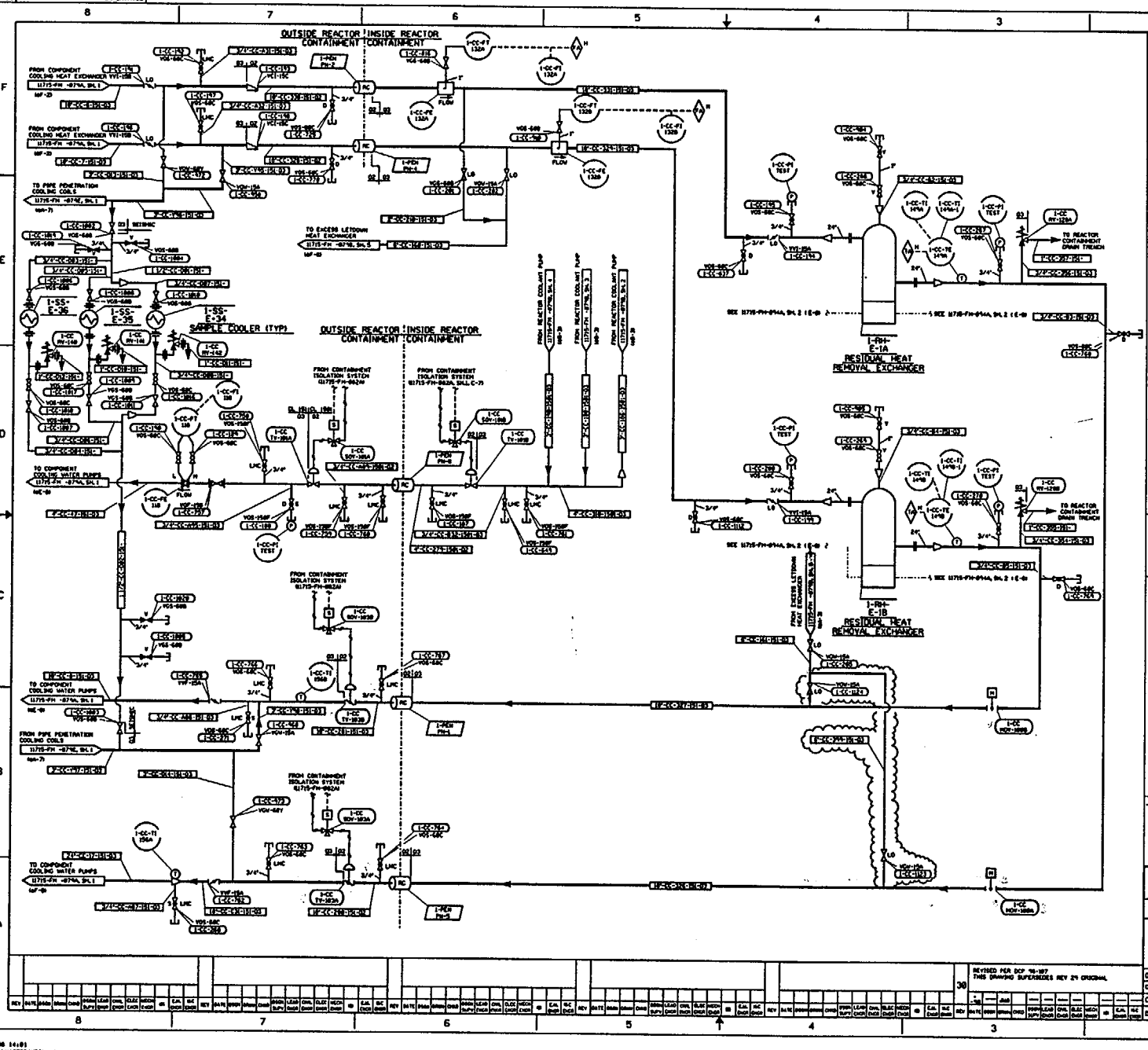

NOTES

1. FOR NOTES, SEE SHEET 1 OF 11715-FH-079A.

THIS CAD DRAWING SHEETS 1,2,3,4 & 5 OF 5 SUPERSEDES THE MANUAL FLOW AND VALVE OPERATING NUMBERS DIAGRAMS 11715-FH-079B REV-17 AND 11715-FH-079C REV-17 RESPECTIVELY.

REFERENCE DRAWINGS

NUMBER	TITLE
01. FOR ADDITIONAL REFERENCE DRAWINGS, SEE SHEET 1 OF 11715-FH-079A	
02. 11715-FH-079A	FLOW/VOV DIAGRAM,COMPONENT COOLING WATER SYSTEM
03. 11715-FH-079B	FLOW/VOV DIAGRAM,SERVICE WATER SYSTEM
04. 11715-FH-062A	FLOW/VOV DIAGRAM,COMPRESSED AIR SYSTEM
05. 11715-FH-094A	FLOW/VOV DIAGRAM,RESIDUAL HEAT REMOVAL SYSTEM

BYPRODUCT DRAWINGS

1. 11715-CBH-079B, SH. 1 ISI CLASSIFICATION BOUNDARY DRAWING
2. DELETED
3. 11715-SPH-079B, SH. 1 ISI SYSTEM PRESSURE TESTING DRAWING

BYPRODUCT NOTES

REVISION DESCRIPTION

VIRGINIA POWER
NORTH CAROLINA POWER

NUCLEAR ENGINEERING SERVICES
RICHMOND, VIRGINIA

FLOW/VALVE OPERATING NUMBERS DIAGRAM
COMPONENT COOLING WATER SYSTEM
NORTH ANNA POWER STATION UNIT 1
VIRGINIA POWER

DSGN	DSGN SUPV	CAD NO. C:\usr\dgn\11079B\MDONm1	
DRAN JEF/DHG	DISPL ENGR	DRAWING NO. 11715-FH -079B	REV. 38
CHKD MEV	LEAD ENGR		
DATE 11/7/96	SCALE NONE	UNLESS OTHERWISE NOTED	SH 1 OF 5

REVISED PER DCP 96-197
THIS DRAWING SUPERSEDES REV 29 ORIGINAL

[BROOKSJ]
24-SEP-1996 16:01
C:\usr\dgn\11079B\MDONm1

100

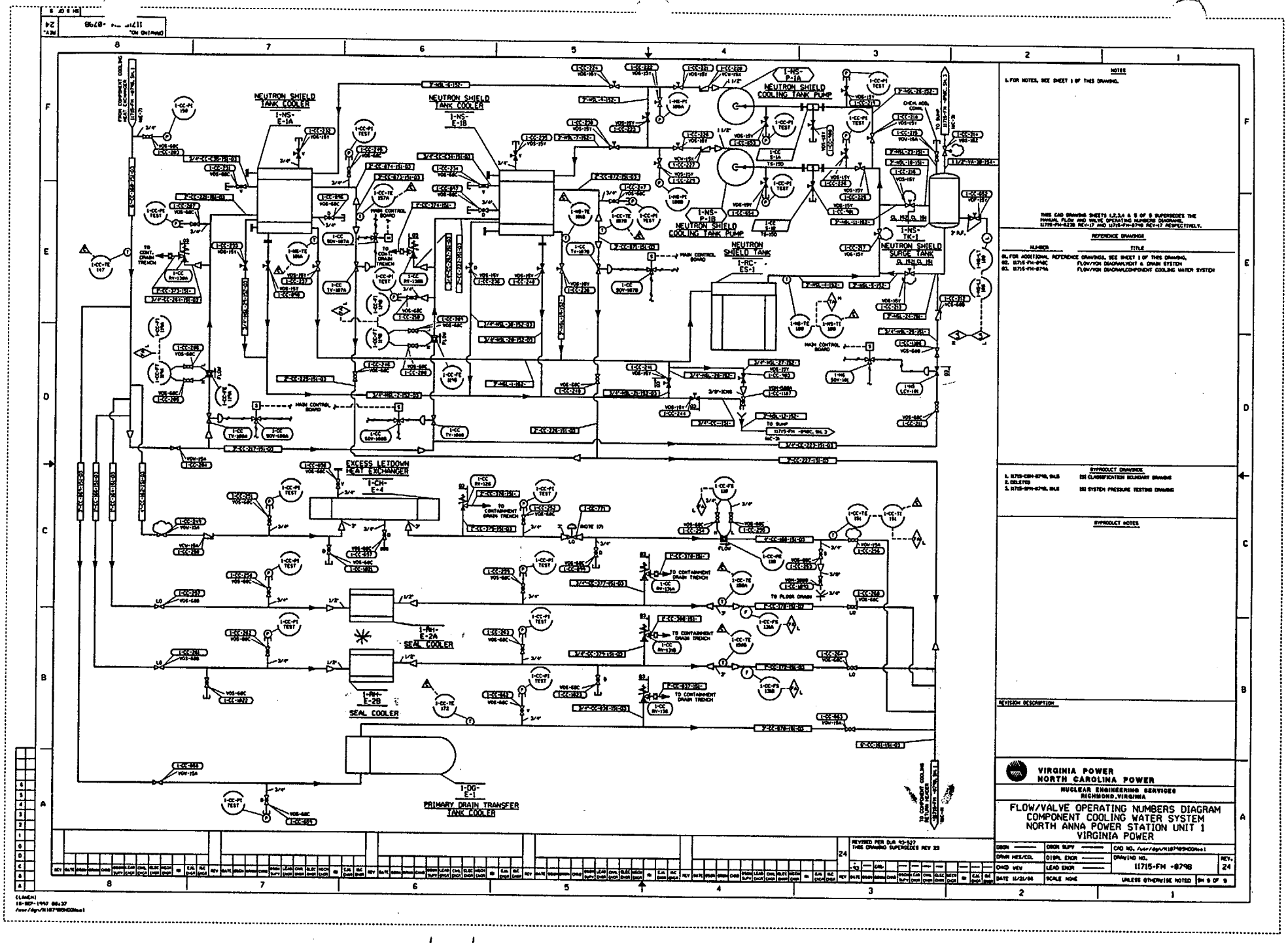

* RHR pump seal coolers

100