DRAFT DISCLAIMER

This contractor document was prepared for the U.S. Department of Energy (DOE), but has not undergone programmatic, policy, or publication review, and is provided for information only. The document provides preliminary information that may change based on new information or analysis, and is not intended for publication or wide distribution; it is a lower level contractor document that may or may not directly contribute to a published DOE report. Although this document has undergone technical reviews at the contractor organization, it has not undergone a DOE policy review. Therefore, the views and opinions of authors expressed do not necessarily state or reflect those of the DOE. However, in the interest of the rapid transfer of information, we are providing this document for your information, per your request.

DF03
01

Pre-Assigned MOL.19981002.0001

CRWMS/M&O

Calculation Cover Sheet

Complete only applicable items.

1. QA: ~~N~~ L 9/28/98 JAK

Page: 1 Of: ~~45~~ 46 JAK 9/

2. Calculation Title Preliminary Preclosure Design Basis Event Calculations for the Monitored Geologic Repository	
3. Document Identifier (including Revision Number) BC0000000-01717-0210-00001 Rev 00	4. Total Pages ~~45~~ 46 JAK 9/22/98
5. Total Attachments 11	6. Attachment Numbers - Number of pages in each I-4, II-10, III-7, IV-11, V-19, VI-6, VII-32, VIII-4, IX-26, X-4, XI-3

	Print Name	Signature	Date
7. Originator	James A. Kappes	James A Kappes	9/21/98
8. Checker	Alex Deng	A Deng	9/22/98
9. Lead Design Engineer	Thomas D. Dunn	Thomas D. Dunn	9/22/98

10. Remarks

~~Work on this document was commenced prior to August 1, 1998. As a result, it is exempt from the "Interim Direction for Document Development" applicable to Systems Engineering & Integration.~~ JAK 11/3/98

Editorial changes were made, in accordance with NLP-3-27, to pages: 6, 20, 41 42, 43, 44, 45, 46, ~~and V-1~~. JAK 11/3/98

3, 13, 14, 19, ——— Attachment V-page V-1, and Attachment X-all pages. JAK 11/12/98

Added page X-2, Attachment X. TDD 11/19/98

Revision History

11. Revision No.	12. Date Approved	13. Description of Revision
00		~~Initial Revision~~ JAK 10/21/98 Issuance

INFORMATION COPY

LAS VEGAS DOCUMENT CONTROL

Table of Contents

1. Purpose 4

2. Method 4
   2.1 Introduction 4
   2.2 Dose Calculation Parameters 6
      2.2.1 Source Term 6
      2.2.2 Release Fraction 7
      2.2.3 PULF Fraction 8
      2.2.4 Fuel Rod Failure Fraction 8
      2.2.5 Atmospheric Dispersion Factor 9
      2.2.6 Breathing Rate 9
      2.2.7 Dose Conversion Factor 9
      2.2.8 Mitigation Factor 9
      2.2.9 HVAC Availability 10

3. Assumptions 11
   3.1 General Assumptions 11
   3.2 Carrier/Cask Transportation and Handling Assumptions 13
   3.3 Canister Transfer System Assumptions 13
   3.4 Assembly Transfer System Assumptions 17
   3.5 Disposal Container Handling System Assumptions 18
   3.6 Waste Emplacement and Subsurface Facility System Assumptions 19

4. Computer Software 20
   Software Approved for QA Work 20
   Software Routines 20

5. Calculations 20

   5.1 Carrier/Cask Transport and Handling Systems (SU16),(SU08) & (SU09) 20
      5.1.1 System Description/Function 20
      5.1.2 Preliminary DBEs 21

   5.2 Canister Transfer System (SU11) 22
      5.2.1 System Description/Function 22
      5.2.2 Preliminary DBEs 22

   5.3 Assembly Transfer System (SU10) 24
      5.3.1 System Description/Function 24
      5.3.2 Overview of the ATS Operations 24
      5.3.3 Preliminary DBEs 25

   5.4 Disposal Container Handling System (SU13) 28
      5.4.1 System Description/Function 28
      5.4.2 Preliminary DBEs 28

   5.5 Waste Emplacement System and Subsurface Facility System 30
      5.5.1 System Description/Function 30
      5.5.2 Preliminary DBEs 31
         5.5.2.1 Internal Event Screening 32
         5.5.2.2 External Event Screening 32

   5.6 Waste Treatment Building (SU04) 34

Table of Contents

5.7 Criticality Safety Summary 34

5.8 Preliminary Seismic DBE Analysis 35

6. Results 35
   6.1 Carrier/Cask Transport and Handling Systems 35
   6.2 Canister Transfer System (SU11) 36
   6.3 Assembly Transfer System (SU10) 37
   6.4 Disposal Container Handling System (SU13) 38
   6.5 Waste Emplacement System (SS17) and Subsurface Facility System (SS01) 39
   6.6 Waste Treatment Building (SU04) 39
   6.7 Summary of Bounding Internal DBEs 40

7. References 41

8. Attachments 46
   I. Release Fraction and PULF Data
   II. Carrier/Cask Transport and Handling Systems Event Trees and Supporting Documentation
   III. Canister Transfer System Event Trees and Supporting Documentation
   IV. Assembly Transfer System Event Trees and Supporting Documentation
   V. Disposal Container Handling System Event Trees and Supporting Documentation
   VI. Waste Emplacement System and Subsurface Facility Systems Calculations and Supporting Documentation
   VII. Seismic DBE Analysis
   VIII. HVAC Availability
   IX. Dose Calculation Data
   X. Crane Data from ~~the U.S. Navy~~ Newport News Shipbuilding JAK 11/12/98
   XI. Site-Specific Yucca Mountain χ/Q Values

1. Purpose

The purpose of this study is to document the results of the scoping preclosure Design Basis Event (DBE) calculations for the Monitored Geologic Repository (MGR). The basis for this scoping preclosure DBE analysis is the Reference Viability Assessment (VA) design (Ref. 7.26). This work will provide a basis for future design analyses to support a MGR License Application (LA) that complies with the applicable radiological dose limits prescribed in 10 CFR 60 (Ref. 7.53). A primary objective of the LA design is to optimize the number of systems, structures and components (SSCs) that are classified as Important to Safety. This engineering calculation will serve as input to the following ongoing activities:

- System description documents (SDDs)
- LA design
- Quality Assurance (QA) and seismic classification of SSCs

This document identifies bounding radiological DBEs for each of the following MGR systems or areas:

1) Carrier/Cask Transport System
2) Carrier Preparation Building Materials Handling System
3) Carrier/Cask Handling System
4) Canister Transfer System
5) Assembly Transfer System
6) Disposal Container Handling System
7) Waste Emplacement and Subsurface Facility Systems
8) Waste Treatment Building

DBE analysis included calculations for both the event frequencies and the dose consequences (rem) at the 5-km site boundary (Key 071, Ref. 7.7). Consequence analysis for Category 2 DBEs (i.e., frequency between 10^{-2} per year and 10^{-6} per year)(Ref. 7.53) was conducted using both "Conservative" and "Best Estimate" dose assumptions (described in Section 2.1). In addition to internal events associated with the above systems, DBE analysis was also conducted for selected seismic, loss-of-offsite power, and criticality events.

2. Method

2.1 Introduction

Preliminary preclosure design basis event (DBE) scenarios for the surface and subsurface operational areas of the MGR were developed and analyzed. Events which could potentially result in a radiological release were identified based on multiple sources, including the Preliminary MGDS Hazards Analysis (Ref. 7.10), reference VA design drawings, discussions with the Surface Design organization, and analyst experience and judgement. Calculations were then performed to determine both the frequency of occurrence and the radiological consequences at the 5-km site boundary (Ref. 7.7). DBEs were grouped into the following frequency categories:

DBE Category	Frequency of DBE Sequence (/year)
1	$f \geq 10^{-2}$
2	$10^{-6} < f < 10^{-2}$
Beyond Design Basis Event (BDBE)	$f \leq 10^{-6}$

The focus of the analysis was on Category 1 and Category 2 events, consistent with guidance in the 10 CFR 60 rulemaking (Ref. 7.53). Events with a frequency less than 10^{-6} per year are termed "Beyond Design Basis Events (BDBEs)", however, the dose consequences of these events were

evaluated similar to Category 1 and Category 2 DBEs. Although the implication is that BDBEs will not influence the design, they in fact will be considered if the consequences are severe or the event frequency is only marginally below 10^{-6} per year.

It should be noted that a DBE frequency is not just the initiating event frequency, but rather the frequency of the entire event sequence. For example: consider a hypothetical two-block crane drop event (i.e., worst-case drop from the maximum crane height physically possible) with the HVAC system unavailable to mitigate the release. If the initiating event frequency is assumed to be 7.3E-3 drops per year for all drop events, the two-block event probability is assumed to be 0.24 (24%), and the HVAC system unavailability is assumed to be 4.8E-4 (dimensionless), the following calculation represents the frequency per year for the entire event sequence:

7.3E-3 (crane drops/year) x 0.24 (2-block drops/crane drop) x 4.8E-4 = 8.4E-7 two-block drops/year

In this hypothetical example, the event sequence falls marginally into the category of "Beyond Design Basis Event."

Preliminary DBE calculations assessed only the Total Effective Dose Equivalent (TEDE). In some cases, the individual organ dose may be more limiting than the TEDE dose; however, this is not expected to significantly change the results of this calculation.

Two models were used to calculate doses, "Best Estimate" and "Conservative". The conservative model uses input parameters and assumptions which reflect a degree of conservatism that would be expected in a NRC licensing submittal. In most cases, the conservative assumptions used herein are based on nuclear licensing precedence (e.g., NUREG-1536, Ref. 7.43) or other NRC approved documents (e.g., Regulatory Guide 1.145, Ref. 7.6). Inputs and assumptions for the best estimate model are expected to be more realistic and contain a higher degree of uncertainty. Best estimate and conservative doses were calculated for most events because (based on perceived NRC interpretation of 10 CFR 60) it is believed that future safety analyses to support LA will reflect best estimate doses for Category-1 DBEs and beyond design basis events, and conservative doses for Category-2 DBEs. Another reason for calculating best estimate and conservative doses is to get a qualitative sense of the uncertainty range, based on the variable inputs and assumptions. The specific parameters associated with conservative and best estimate calculations are described in Section 2.2. General calculation assumptions which were used in all of the dose calculations are identified in Section 3.1.

Seismic-initated DBEs were evaluated from a slightly different perspective than internal DBEs (e.g., drop events) and other external DBEs (e.g., loss-of-offsite power events). Consequence analysis of seismic-initiated events indicated whether or not SSCs are important to safety and provided a basis for assigning a seismic frequency classification (i.e., Frequency-Category-1 or Frequency-Category-2). The seismic analysis, which addressed each major function of the MGR separately, also produced design options that would satisfy the radiological dose requirements from 10 CFR 60. The methodology used for seismic DBE analysis is further described in Section 5.8.

DBE analysis is an iterative process that will proceed as the design details evolve. As the LA design matures, final DBE analysis will be completed at a level of detail sufficient for NRC review. Important to Safety, with reference to SSCs, is defined in 10 CFR 60.2 as "..those engineered features of the repository whose function is:

(1) To provide reasonable assurance that high-level waste can be received, handled, packaged, stored, emplaced, and retrieved without exceeding the requirements for Category 1 DBEs; or

(2) To prevent or mitigate Category 2 DBEs that could result in doses equal to or greater than the values specified in 10 CFR 60.136 to any individual located on or beyond any point on the boundary of the preclosure controlled area."

2.2 Dose Calculation Parameters

The general equations for calculating the TEDE dose to the offsite public, for any given event are provided in Attachment IX, Dose Calculation Data. Attachment IX contains detailed information on the dose calculation methodology employed in this report, and provides a sample dose calculation.

Where data existed, both "Conservative" and "Best Estimate" parameters were used to calculate offsite doses. However, for certain parameters such as dose conversion factors, release fractions and breathing rates, identical values were used to calculate both conservative and best estimate doses. For these parameters, the values used were assumed to be conservative and applicable based on previously established nuclear licensing precedence.

The DBE dose assessment provided herein was based principally on standard methodology for nuclear safety analysis and on established nuclear licensing precedence, where applicable (References 7.3, 7.6, 7.11, 7.18, 7.23, 7.29, ~~7.36,~~ 7.41, 7.43, 7.44, 7.53, 7.56, 7.59). The following sections describe the various parameters required to evaluate dose consequences. Conservative and best estimate assumptions for each parameter are identified in Section 3.1. JAK 11/12/98

2.2.1 Source Term

The source term is the amount of radioactive material that is potentially available for release (i.e., material-at-risk) during a DBE. The source term for a given DBE is a function of the fuel type and fuel characteristics, including burnup, enrichment and decay time. The conservative model attempted to capture the worst-case scenario for each DBE and, therefore, used the most conservative fuel possible from a radiological dose perspective. The best estimate model represents the most-likely scenario and utilized the average fuel type and characteristics for a given event and location.

The radionuclide source terms are grouped into inhalation and submersion source terms. The inhalation source terms are formed by the radionuclides available for release if engineered barriers (i.e., cask, canister, disposal container or fuel rod) are breached. The inhalation dose is received when a person is engulfed by the released radioactive plume and inhales the radionuclides suspended in the plume. The inhalation doses are 50-year committed effective dose equivalents. The submersion offsite doses are the effective dose equivalents due to external radiation exposure to an individual's body and organs from the passage of a radioactive plume. The total effective dose equivalent (TEDE) is the sum of the 50-year committed effective dose equivalent (inhalation) and the external effective dose equivalent (submersion) (Ref. 7.1).

Each of the source term radionuclides was evaluated for its dose contribution to the gonad, breast, lung, red marrow, bone surface, thyroid, remainder, and whole body. For the purposes of this scoping analysis, the source terms were combined into six radionuclide groups according to their similarity in chemical and/or physical characteristics (Ref. 7.44). For example, the source terms for Cs-134, Cs-137 and Ru-106 were combined into a single "Cesium" source term to facilitate the dose calculations. The radionuclide groups included Particulates, Noble Gases, Iodines, Cesium, Tritium, Strontium, and Crud (surface deposits on fuel rods whose primary radionuclide is Co-60). For additional detail regarding the source term groupings and dose calculation methodology, refer to Reference 7.44.

The pressurized-water reactor (PWR) and boiling-water reactor (BWR) design basis fuel (DBF) characteristics used to calculate <u>conservative</u> doses for events involving commercial spent nuclear fuel (CSNF) were based on Reference 7.7, *Source Terms for Design Basis Events Analyses*. These fuel characteristics bound 97.85% and 100% of the PWR and BWR assemblies, respectively, that are expected to be received at the repository (Ref. 7.11). The 100% Bounding PWR (Ref. 7.11) source term was used for conservative calculations involving single SNF assemblies and bounds . The Savannah River defense high-level waste (DHLW) was selected as the DHLW DBF since it bounds the inhalation dose for the bone surface and whole body, when compared with other glass waste

(Ref. 7.11). Other types of canistered waste, including canistered PWR/BWR and N-Reactor fuel, were also evaluated for events in the canister transfer system (CTS).

For DBEs involving individual commercial spent nuclear fuel (SNF) assemblies, the 100% Bounding (PWR) fuel was used for the Conservative case whereas the 50% Average SNF inventory was used for the Best Estimate source term. The 50% Average SNF source terms (Curies/Assembly) were obtained from the LWR Radiological Characteristics Database (Ref. 7.12), based on the average fuel characteristics specified in the Controlled Design Assumptions Document (Key 004, Ref. 7.7). The 50% Average fuel is intended to estimate the fuel characteristics of the average commercial SNF assembly that will be received at the repository (see Table 2.2-2).

Tables 2.2-1 and 2.2-2 show the various fuel types and fuel characteristics that were used in the DBE dose assessment.

Table 2.2-1 - Fuel Types for Dose Assessment

Fuel Container	Fuel Type Assumed for Dose Assessment	
	Best Estimate (rem/FA)	Conservative (rem/FA)
Transportation Cask	50% Average SNF	PWR/BWR DBF
CSNF Assembly	50% Average SNF	100% Bounding PWR
Disposable Canister	DHLW DBF, PWR/BWR DBF and N-Reactor	DHLW DBF, PWR/BWR DBF and N-Reactor
Disposal Container	50% Average SNF	PWR/BWR DBF

Table 2.2-2 - Fuel Characteristics

Fuel Type	Fuel Characteristics			
	Burnup, (MWD/MTU)	Enrichment (%)	Decay Time (yrs)	Reference
50% Average PWR	39,560	3.69	25.9*	7.12
50% Average BWR	32,240	3.00	27.2*	7.12
PWR DBF	48,086	4.20	10	7.7
BWR DBF	49,000	3.74	10	7.7
100% Bounding PWR	74,600	5.07	10	7.11
HLWC DBF	N/A	N/A	N/A	7.11

* Conservatively used a standard 20-year decay to derive the radionuclide inventory because the CDB would not allow the standard decay time to be scaled to 25.9 years for output in "Curies by Isotope"

Sections 2.2.2 through 2.2.4 describe various parameters that are components of the source term which is released to the environment from the fuel types of Section 2.2.1.

2.2.2 Release Fraction

In this report, the term "release fraction" includes the fraction of radioactive gases that is released to the environment as well as the fraction of airborne radioactive particulates that could be transported through the air, inhaled, and deposited in the deep lung (Note: the particulate release fraction is equivalent to the respirable fraction defined in Reference 7.40).

Release fractions for all of the waste forms evaluated in this calculation (e.g., high-level waste glass, spent fuel assemblies, etc.), for both the conservative and best estimate models, are based on conservative release fractions accepted by the NRC in NUREG-1536 (Ref. 7.43) for commercial spent nuclear fuel (CSNF) radionuclides, with the exception of particulates. For particulates, the total release fraction is equal to the sum of the respirable fraction available in the fuel matrix and the PULF fraction (if applicable, as described in Section 2.2.3) generated by impact rupture of the fuel matrix.

The gap release fraction applies only to CSNF and is the fraction of each radionuclide inventory that is present in the fuel-cladding gap (as a result of irradiation in the reactor and normal fuel handling) and available for release upon failure of the cladding. The gap release fraction includes gases, volatile species and solids (particulates). The gap fraction of particulates is reduced by the aerosolizable fraction. For dose evaluations, the particulate fraction is reduced further by the respirable fraction.

The release fractions presented in Table 2.2-3 below represent the respirable release fractions (excluding PULF) used for consequence analysis of all waste forms evaluated herein.

Table 2.2-3 –Release Fractions for Consequence Analysis

Nuclide Group	Release Fraction	Reference
Particulates	2.0E-6	7.2
Crud (Co-60)	0.15	7.43
H-3	0.30	7.43
Kr-85	0.30	7.43
Iodines	0.10	7.43
Cs-134	2.3E-5	7.43
Cs-137	2.3E-5	7.43
Sr-90	2.3E-5	7.43

2.2.3 PULF Fraction

The PULF fraction is the fraction of airborne, respirable size (< 10-μm) particulates that are generated from the fuel matrix as the result of an energetic impact event that ruptures the fuel rod cladding and pulverizes a portion of the fuel matrix. The PULF fraction is added to the particulate gap release fraction for energetic release scenarios such as cask/canister drops, slapdowns and impacts. Only a fraction of the total kinetic energy of a drop is imparted to pulverization.

The PULF equation, described in Attachment I, is based on studies by Mecham (Ref. 7.4) and Jardine (Ref. 7.5) at Argonne National Laboratory. Since a portion of the impact energy is absorbed by the metallic components in a commercial spent fuel assembly, an energy partition factor (EPF) of 0.2 was applied for spent fuel assemblies to account for the fraction of impact energy absorbed by the brittle UO_2 fuel. This EPF is assumed conservative for commercial spent nuclear fuel. Due to the brittle nature of DHLW glass and the fact that it contains no other structural materials, an EPF fraction of 1.0 was conservatively applied for dose calculations involving DHLW glass. The same EPF fractions were also used by MacDougall, et. al. (Ref. 7.3) in a preliminary preclosure radiological safety analysis of the Yucca Mountain conceptual design.

2.2.4 Fuel Rod Failure Fraction

A fuel rod cladding failure probability is required to determine the source term that is available for release during a DBE involving CSNF. NUREG-1536 (Ref. 7.43) was used as a basis for both conservative and best estimate calculations. The values used in this report are expected to be somewhat conservative In both cases, the fuel rod failure probability was only applied if the DBE resulted in an impact that exceeded the assumed design basis of the applicable waste form/container (i.e., cask, canister, SNF assembly, or disposal container). For example, a disposal container drop from 2.1 meters (2 meters is the disposal container design basis drop height) is assumed to result in a breach of the disposal container and failure of 10% of the fuel rods inside. In reality, this is expected to be quite conservative since no credit is taken for energy absorption by the structural components of the fuel assembly or by the disposal container itself.

The fuel rod clad failure probability as described herein does not apply to Defense High Level Waste (DHLW) glass; therefore, a value of 1.0 was assumed. This is equivalent to assuming no cladding. It should be noted that fuel rod cladding failure was assumed only when a DBE exceeded the equivalent design basis drop height for the cask, canister, etc. For example, if the Disposal Container (DC) was designed for a 2-meter (6.6-foot) drop and the DBE resulted in a 6-meter (19.7-foot) drop, the DC was assumed to breach and either 100% (conservative) or 10% (best estimate) of the fuel rods were assumed to fail. Conversely, if the DBE was within the design basis (e.g., a 1-meter DC drop), it was assumed that no radiological release would occur.

2.2.5 Atmospheric Dispersion Factor

The atmospheric dispersion factors (χ/Qs) for the conservative and best estimate cases are based on Yucca Mountain site-specific data obtained from the Environmental Field Program (Attachment XI). The values were calculated using the equations prescribed in Regulatory Guide 1.145 (Ref. 7.6). The conservative and best estimate atmospheric dispersion factors used for DBE dose calculations are shown in Table 2.2-5 below.

Table 2.2-5 – Atmospheric Dispersion Factors

Dose Model	χ/Q Value (sec/m^3)	Basis
Conservative	4.20E-5	95% Yucca Mountain χ/Q
Best Estimate	1.44E-5	50% Yucca Mountain χ/Q

2.2.6 Breathing Rate

An adult breathing rate of 3.3E-4 m^3/s (20 liters/min) was assumed for all dose calculations, including both conservative and best estimate. This is based on the breathing rate for "reference man" established in Reference 7.47 and accepted by the NRC for accident analysis (Ref. 7.43). This breathing rate is based on the volume intake of air for "light activity" and is considered to be appropriate for DBE accident scenarios resulting in short-term (≤ 8-hour) exposures to the public at the 5-km site boundary.

2.2.7 Dose Conversion Factor

Dose conversion factors (DCFs) for converting source terms to organ-specific inhalation and submersion doses were obtained from Federal Guidance Report #11 (FRG11)(Ref. 7.1). These DCFs were used for both best estimate and conservative dose calculations. The use of Reference 7.1 for DCFs is consistent with NRC guidance in NUREG-1536 (Ref. 7.43).

Federal Guidance Report #12 (FRG12) (Ref. 7.63) was used in limited cases to evaluate the sensitivity of the offsite dose calculations to the individual radionuclide DCFs. FRG12 is more recent than FRG11 and contains submersion DCFs for many more radionuclides, however, it's not clear to what extent FGR12 will be adopted by the NRC for licensing purposes.

No pathways for ingestion were considered in this study since there are no farms within proximity of the 5-km site boundary. Furthermore, ingestion calculations are generally not performed for design basis events for nuclear power plants.

2.2.8 Mitigation Factor

The mitigation factor, as defined herein, is the fraction of airborne radioactive particulate material that is retained by a confinement area through natural mechanisms (e.g., gravitational settling) and/or engineered systems (e.g., filtration). In this scoping report, gravitational settling was not considered. The sole contributor to the mitigation factor in this report is the fraction of particulate retention provided by high efficiency particulate (HEPA) filters, which are a component of the HVAC system.

The DBEs evaluated in this report considered a nominal single-stage HEPA filter with an efficiency of 99.97% (0.9997) for particles less than 0.3-μm diameter (Ref. 7.38). This efficiency is assumed to be conservative for filtering radionuclide particulates with a aerodynamic equivalent diameter (AED) of less than 10-μm (assumed to be the cutoff diameter for respirable particulates). The number of HEPA filters considered is also conservative, based on the current HVAC design (Ref. 7.17), which indicates a bank of three filters in series for secondary confinement ventilation areas and an additional standby ventilation exhaust system for primary confinement ventilation areas. Based on the nominal single-stage filter efficiency stated above, a mitigation factor of 3.0E-4 (i.e., 1.0-.9997) was applied to all particulate radionuclide releases postulated to occur when the HVAC system is available (see Section 2.2.9). This mitigation factor was used for both best estimate and conservative dose calculations.

Another factor which is often considered as a mitigation factor in radiological safety assessments is barrier retention. In this report, no credit was assumed for particulate retention by any of the applicable barriers, including the fuel cladding, transportation cask, canister, or disposal container. This conservative approach was taken because there is considerable uncertainty in assuming that a fraction of the particulates is retained within the various waste barriers if they are breached. For comparison, MacDougall assumed a 10% retention factor for each barrier present (Ref. 7.3). This is an area which requires future study, as it has a significant impact on the calculated offsite doses.

2.2.9 HVAC Availability

HVAC availability is the probability that the HVAC system will be available to mitigate a radiological release when an accident occurs. While HVAC availability is not an explicit parameter in the dose equation (see Attachment IX), a discussion is nevertheless warranted because of its importance in calculating event frequencies. HVAC availability was considered as a conditional probability in every event sequence evaluated. The significance of HVAC availability is twofold: (1) it impacts the event frequency calculation and may be the difference between an event being classified as Category-1, Category-2 or BDBE; and (2) it impacts the event consequence (dose at the site boundary) by determining whether a mitigation factor is applied. For example, if HVAC is unavailable at the time of an accident, radiological releases are allowed to escape the Waste Handling Building (WHB) unfiltered; if HVAC is available, radiological releases are mitigated by the HVAC/HEPA filters and result in a negligible dose at the site boundary.

The current HVAC design analysis, *Surface Nuclear Facilities HVAC Analysis* (Ref. 7.17), describes three confinement zones for the WHB: primary, secondary and tertiary. Primary confinement ventilation zones are "normally contaminated areas...where nuclear material is exposed and unprotected by any qualified process enclosure, sealed shipping or disposal container, or the transfer pool water, and the associated ventilation system." Secondary confinement ventilation zones are "areas with high potential for contamination...where the handled nuclear material is in a process enclosure, in unloading preparation stages, in lid welding stages, or in the transfer pool, and the associated ventilation system." Tertiary confinement ventilation zone "areas are usually free of radioactive material, except only in approved container" (Ref. 7.17).

Each of the three confinement areas maintains a negative pressure differential relative to the outside environment, with the primary confinement zone having the lowest negative pressure differential and tertiary confinement zone having the highest negative pressure differential.

The particular HVAC system ventilation zones are important to this analysis because of their impact on the mitigation factor which is applied in DBE consequence analysis calculations. Based on a review of Reference 7.17, it is assumed that tertiary ventilation confinement zones <u>will not</u> have a HEPA-filtered ventilation exhaust system, secondary ventilation confinement zones <u>will</u> have a HEPA-filtered ventilation exhaust system, and primary ventilation confinement zones will have a HEPA-filtered ventilation exhaust system <u>and</u> a standby ventilation exhaust system. As a result, each of the ventilation confinement zones will have a different HVAC unavailability associated with it.

Based on a review of Reference 7.17, it was concluded that the following Waste Handling Building HVAC system ventilation confinement zones and associated HVAC unavailabilities are applicable to this analysis (see Attachment VIII for fault tree calculation of HVAC Unavailability):

WHB Area	Confinement Zone	HVAC Unavailability
Carrier Bay	Tertiary	N/A (no HVAC in design)
Assembly Transfer System Hot Cell	Primary	2.5E-5
Assembly Transfer System Pools	Secondary	4.8E-4
Canister Transfer System	Secondary	4.8E-4
Disposal Container Handling System	Secondary	4.8E-4

The calculated HVAC unavailabilities (see fault tree, Attachment VIII) are based on a simplified, conservative model of the HVAC system. For example, the failure rate of the secondary confinement zone was calculated as though there was only one fan in the system, even though the current HVAC design indicates nine operating fans in series (Ref. 7.17). Thus, the HVAC unavailability for the primary and secondary confinement zones are intentionally very conservative and result in bounding frequency calculations. Additional work is planned in the future to take credit for HVAC system redundancies and refine the availability numbers, as appropriate.

3. Assumptions

3.1 General Assumptions

3.1.1 It is assumed that a restricted area boundary of 5 km will be established around the waste handling building. This assumption is based on CDA Key 071 (Ref. 7.7), and used to select the atmospheric dispersion factors for calculating offsite doses.

This assumption is used in all offsite dose calculations.

3.1.2 It is assumed for all DBE release scenarios that release of radionuclides from the waste container or waste form to the environment occurs within a two-hour period.

This assumption is used in all offsite dose calculations.

3.1.3 The preliminary DBE analysis assumes that the fuel types (e.g., PWR/BWR DBF) shown in Table 2.2-1 are used to determine radionuclide source terms for DBEs involving the corresponding fuel containers (e.g., disposal container).

This assumption is used in all offsite dose calculations.

3.1.4 It is assumed that the fuel characteristics (e.g., burnup, enrichment & decay time) shown in Table 2.2-2 are used to determine radionuclide source terms for DBEs involving the corresponding fuel types (e.g., PWR DBF).

This assumption is used in all offsite dose calculations.

3.1.5 It is assumed that the release fractions shown in Table 2.2-3 constitute the respirable fraction of radionuclides used to calculate offsite doses for all DBEs evaluated.

This assumption is used in all offsite dose calculations.

3.1.6 It is assumed that an additional fraction of respirable-size particulates, termed the PULF fraction, is generated and made available for release as a result of energetic events that, in effect, pulverize the fuel matrix. The PULF fraction, as defined in Attachment I, is assumed to be a linear function of the equivalent drop height for a given event.

This assumption is used in all offsite dose calculations.

3.1.7 In the conservative case it is assumed that 100% of the fuel rods fail during a DBE that involves CSNF. The best estimate case assumes that 10% of the fuel rods fail during a DBE that involves CSNF.

This assumption is used in all offsite dose calculations.

3.1.8 In both the conservative and best estimate calculations, it is assumed that a waste form (e.g., transportation cask, disposal container, etc.) is breached when a DBE exceeds the waste form's design basis. Where there is no established design basis (e.g., bare fuel assemblies), it is assumed that the waste form breaches during any DBE.

This assumption is used in all offsite dose calculations.

3.1.9 It is assumed that the atmospheric dispersion factor for conservative calculations is 4.20E-5, based on the 95% Yucca Mountain meteorology data (Attachment XI), and 1.44E-5 for best estimate calculations, based on the 50% Yucca Mountain meteorology data (Attachment XI).

This assumption is used in all offsite dose calculations.

3.1.10 It is assumed that an adult at the site boundary has a breathing rate of 3.3E-4 m^3/s. This is based on the "reference man" breathing rate established in Reference 7.47.

This assumption is used in all offsite dose calculations.

3.1.11 The unavailability of the HVAC system is calculated to be 4.8E-4/yr (see Attachment VIII) for secondary confinement areas (i.e., Canister Transfer System, DC Handling System, Assembly Transfer System Pool) with a single ventilation exhaust system and 2.5E-5/yr (Attachment VIII) for primary confinement areas with a standby ventilation exhaust system (Ref. 7.17). These numbers are based on the assumed failure rates for HVAC system components presented in Attachment VIII.

This data is used in all event trees and in offsite dose calculations for event sequences with HVAC unavailable.

3.1.12 HVAC system unavailability is assumed to occur as the result of a single fan motor failure or seal failure. Furthermore, it is conservatively assumed that without active HVAC ventilation there will be a loss of particulate confinement, and radioactive particulates will escape unfiltered from the Waste Handling Building (WHB). This, in essence, assumes that the leakpath factor for the WHB is 1.0 (mitigation factor is zero) when the HVAC system is unavailable.

This data is used in all event trees and offsite dose calculations.

3.1.13 It is assumed that a nominal single-stage HEPA filter has an efficiency of 99.97% (0.9997) for particles less than 0.3-μm diameter (Ref. 7.38). This efficiency is assumed to be conservative for filtering radionuclide particulates with a aerodynamic equivalent diameter (AED) of less than 10-μm (assumed to be the cutoff diameter for respirable particulates). Based on this filter efficiency, a mitigation factor of 3.0E-4 (i.e., 1.0-.9997) is assumed to be applicable for all particulate radionuclide releases postulated to occur when HVAC ventilation is available.

This assumption is used in all offsite dose calculations involving mitigated DBEs.

3.1.14 It is assumed that the initiating frequency for a loss-of-offsite-power event is 0.2 per year. This is a conservative assumption based on historical data from commercial nuclear power plants (Ref. 7.61).

This assumption is used in all offsite dose calculations involving DBEs initiated by a loss-of-offsite power.

3.1.15 In a loss-of-offsite power event, the mechanical failure rate (per demand) of a clutch to engage and prevent the drop of a suspended load is assumed to be 3.04E-04 per demand (Ref. 7.55). This failure rate is assumed to be applicable to the cranes and lifting systems employed in the WHB.

This assumption is used in all offsite dose calculations involving DBEs initiated by a loss-of-offsite power.

3.1.16 It is assumed that passive HEPA filters remain functional for 24-hours following a loss-of-offsite power event to mitigate radiological releases, and that leakage from the WHB is through the HEPA filters

This assumption is used in all offsite dose calculations involving DBEs initiated by a loss-of-offsite power.

3.1.17 It is assumed that the energy partition factors (EPFs) for calculating the PULF fraction (see Section 2.2.3) of high-level waste glass and spent nuclear fuel are 1.0 and 0.2, respectively.

This assumption is used in all offsite dose calculations to calculate the PULF fraction.

3.2 Carrier/Cask Transportation and Handling Assumptions

3.2.1 HVAC filtration does not exist for activities performed in the Carrier/Cask Transport System (CCTS), Carrier Preparation Building Material Handling System (CMHS) and Carrier/Cask Handling System (CCHS) (Ref. 7.17).

This assumption is used in Section 5.1, Section 6.1 and Attachment II.

3.2.2 The design basis drop height for transportation casks is 9 meters (30 feet) (Ref. 7.59) with impact limiters and 2 meters (6.6 feet) without impact limiters (Ref. 7.60).

This assumption is used in Section 5.1, Section 6.1 and Attachment II.

3.2.3 The average heavy-lift drop frequency is 1.4E-5 per lift, based on heavy-lift crane data from ~~the U.S. Navy~~ Newport News Shipbuilding JAK 11/12/98 (Attachment X). This assumption is used in Section 5.1, Section 6.1 and Attachment II.

3.2.4 Cask throughput is in accordance with Key 001 of the CDA (Ref. 7.7). This assumption is used in Section 5.1, Section 6.1 and Attachment II

3.3 Canister Transfer System Assumptions

Assumptions 3.3.1 through 3.3.5 may apply to DBEs involving any canistered fuel, including high level waste canisters (HLWCs), commercial SNF (CSNF), N-Reactor fuel or MCO particulate inventory:

3.3.1 It is assumed that the maximum number of canisters arriving at the repository during the peak year is 500 (Table 3-8 of Reference 7.7). This number is conservatively used to calculate the annual handling frequency for HLWCs and canistered CSNF.

This assumption is used in Section 5.2, Section 6.2 and Attachment III.

3.3.2 It is assumed that the CTS crane lifts each canister twice – once from the transportation cask to the lag storage area and once from the lag storage area to the disposal container (Ref. 7.18). This assumption is conservative since large canisters are only lifted once – out of the transportation cask and into the disposal container.

This assumption is used in Section 5.2, Section 6.2 and Attachment III.

3.3.3 For drop events, it is assumed that the average crane drop frequency for normal operations is 1.4E-5 drops per lift, based on heavy-lift crane data from ~~the U.S. Navy~~ Newport News Shipbuil (Attachment X). JAK 11/12/98

This assumption is used in Section 5.2, Section 6.2 and Attachment III.

3.3.4 Determination of drop distances used dimensions taken from figures in the conceptual analysis for the CTS (Ref. 7.18). In the absence of qualified drawings, it is assumed that these dimensions are correct for this analysis. The two-block height for the CTS crane is assumed to be 14.9 meters (49 feet) (i.e., 0.61 meters (2 feet) higher than the high hook height).

This assumption is used in Section 5.2, Section 6.2 and Attachment III.

3.3.5 It is assumed that one canister is breached as part of the best estimate and conservative dose calculations and that all releasable fractions of the radionuclide inventory escape the canister.

This assumption is used in Section 5.2, Section 6.2 and Attachment III.

High Level Waste Canisters

Assumptions 3.3.6 through 3.3.9 apply specifically to DBEs involving HLWCs and canistered CSNF:

3.3.6 It is assumed that canisters received in the CTS are able to withstand a 7-meter (23-foot) drop onto a flat unyielding surface without breaching. This assumption is based on the Savannah River canister procurement specification (Ref. 7.19) and the Large MPC Subsystem Preliminary Design Report (Ref. 7.48).

This assumption is used in Section 5.2, Section 6.2 and Attachment III.

3.3.7 The probability of a canister drop from a height greater than its design basis assumes that the hard stop, which prevents a HLWC from being raised above the normal operating height, was omitted as a result of human error after maintenance of the crane. For the screening event tree shown in Attachment III, it was assumed that an error of omission occurred during performance of a list of written procedures with checkoff provisions. This human error probability is assumed to be 3.0E-3 (Table 20-7, Reference 7.20).

This assumption is used in the "canister drop" event tree (events CTS001-CTS007) shown in Attachment III.

3.3.8 The probability of a defective canister is assumed to be 1.06E-3. This is assumed to be equal to the probability of a weld defect on the outer barrier of a waste package (Ref. 7.23, page 60 of 69). The weld defect probability in Reference 7.23 is based on welds of a waste package with thicker walls; therefore, it is assumed to be conservative for a disposable canister.

This assumption is used in the "canister drop" and "loss-of-offsite power event trees (events CTS002-CTS003 and CTS010-CTS011) shown in Attachment III.

3.3.9 The probability of two defective canisters being involved in the same drop event is 1.12E-6 [i.e., $(1.06E\text{-}3)^2$].

This assumption is used in the "canister drop" event tree (events CTS004-CTS005) shown in Attachment III.

N-Reactor Fuel

Assumptions 3.3.10 through 3.3.21 apply specifically to DBEs involving N-Reactor fuel and MCO particulate inventory in the CTS:

3.3.10 It is assumed that the total number of MCOs arriving at the repository over 20 years is 400, or an average of 20 MCOs per year. This is based on preliminary information from Reference 7.64, page I-4. Based on this information, the annual MCO handling frequency is calculated by multiplying the arrival rate per year (20 MCOs) by the total number of lifts (2) to yield a handling frequency of 40 MCO lifts per year. This results in a probability of 5.6E-4 MCO drops per year (1.4E-5 x 40).

This assumption is used in Section 5.2, Section 6.2 and Attachment III.

3.3.11 It is estimated that 1 out of 400 MCOs received at the repository contains quantities of hydrogen and uranium hydride that could potentially challenge the integrity of the WHB HEPA filters. This is based on:

a) the conservative assumption that after the cold vacuum drying process at Hanford, 50% of the MCOs (i.e., 200 MCOs) will have more than the 1.3 kg residual water limit for acceptance into the repository (Ref. 7.50);
b) a human error probability of 0.01 (Ref. 7.20) in calculating the amount of residual water in an MCO;
c) a probability of 0.5 that the amount of residual water will be underestimated due to human error (i.e., of the human errors, half will be underestimates and half will be overestimates); and
d) the assumption that N-Reactor fuel will meet the yet-to-be-defined repository acceptance criteria.

This assumption is used in Section 5.2, Section 6.2 and Attachment III.

3.3.12 It is assumed that during the MCO packaging operation in the Waste Handling Building, an MCO is lifted from the cask by a crane and is transferred to either lag storage or to a disposal container (DC). During this operation, it is assumed that the MCO is lifted to a height of 20.6 feet, then accidentally dropped onto the CTS floor and breached. Since the MCO is designed to withstand only a 0.6-meter (2.0-foot) (Ref. 7.52) vertical drop on reinforced concrete, the MCO is not expected to withstand a drop from the normal lift height of 6.3 meters (20.6 feet) in the CTS. However, since there is no data to rule out the possibility that an MCO will remain intact after impact, an MCO breach probability of 0.99 is assumed.

This assumption is used in Section 5.2, Section 6.2 and Attachment III.

3.3.13 It is conservatively assumed that 90% of the 400 MCOs received at the repository will have a pressure higher than 25 psig. This is based on information in Reference 7.65, which indicates a low MCO pressure of 9 psig, a bounding pressure of 133 psig, and a best-estimate pressure of 38 psig.

This assumption is used in Section 5.2, Section 6.2 and Attachment III.

3.3.14 Since the MCO is expected to be pressurized above 25 psig by hydrogen and/or water vapor, an airborne release fraction (ARF) of 0.1 and a respirable fraction (RF) of 0.7 (Ref. 7.40) are conservatively assumed for pressurized release of uranium hydride and uranium oxide particulates.

This assumption is used in Section 5.2, Section 6.2 and Attachment III.

3.3.15 The conditional probability of metallic uranium ignition is assumed to be 0.1. This is based on the assumption that hydrogen and/or uranium hydride released from a breached MCO are ignited outside the MCO and that there is slow oxidation but no ignition of uranium metal inside the MCO following the combustion of hydrogen and/or uranium hydride. Ignition of uranium metal inside an MCO is considered highly unlikely due to high ignition temperatures (>500°C) of bulk uranium metal (Ref. 7.40). This assumption will be verified by future analyses at the NSNFP.

This assumption is used in Section 6.2 and Attachment III.

3.3.16 ARF and RF values of 3.0E-5 and 4.0E-2 (Ref. 7.40), respectively, for plutonium oxidation below its ignition temperature are assumed to be applicable to uranium oxidation below its ignition temperature. This is based on previous test data that indicates the plutonium and uranium ignition temperatures and ARFs/RFs for self-sustained oxidation (i.e., combustion) are very similar (Ref. 7.40).

This assumption is used in Section 6.2 and Attachment III.

3.3.17 It is assumed that there is an initial non-reactive particulate mass of 7-kg (Ref. 7.51) in each MCO. It is further assumed that this non-reactive particulate mass is 100% UO_2 (Ref. 7.51). It is also assumed that there are no reactive particles immediately remaining after the cold vacuum drying process (Ref. 7.51). Reference 7.51 shows that most of the non-reactive particulates are UO_2.

This assumption is used in Section 6.2 and Attachment III.

3.3.18 An initial free and bound water mass of 1.3-kg (Ref. 7.50) is assumed, which is the maximum quantity of water allowed in an MCO without challenging the integrity of the Waste Handling Building HEPA filters. It is further assumed that all free and bound water is reacted stoichiometrically (Ref. 7.51) with uranium to form 11.6-kg of uranium hydride and 9.8-kg of uranium dioxide.

This assumption is used in Section 6.2 and Attachment III.

3.3.19 Since the WHB is above ground, a ground level release to the environment is assumed.

This assumption is used in Section 6.2 and Attachment III.

3.3.20 No credit is taken for deposition and plate-out of fission products and uranium oxide aerosols on the building structures or leakage paths.

This assumption is used in Section 6.2 and Attachment III.

3.3.21 The worst case meteorology (F stability and 1 m/s wind speed) is assumed. This assumption is used in Section 6.2 and Attachment III.

3.4 Assembly Transfer System Assumptions

3.4.1 It is assumed that, for drop events, the assembly transfer machine drop frequency per lift is the same for each assembly handling basket and fuel assembly. This drop frequency is assumed to be 1.8E-5 drops per lift (Ref. 7.23). This frequency is conservatively assumed for drops from any height and is based on historical data for fuel handling accidents at commercial nuclear power plants (Ref. 7.23).

This assumption is used in Section 5.3, Section 6.3 and Attachment IV.

3.4.2 It is conservatively assumed that assemblies and assembly baskets are transported in the assembly transfer machines at the highest possible elevation above the assembly hot cell floor (i.e., the assemblies and baskets are raised up to the fixed stops that limit further lifting in the assembly transfer machines), thereby maximizing the distance that the baskets are assumed to fall in the various DBEs analyzed. These distances will differ for the PWR and BWR baskets and assemblies due to the difference in basket and assembly heights (or lengths). Furthermore, the shortest BWR assembly and assembly basket is conservatively assumed in the analysis involving BWR fuel in order to maximize the drop heights.

This assumption is used in Section 5.3, Section 6.3 and Attachment IV.

3.4.3 It is assumed that the throughput schedule for waste packages (WPs) containing fuel assemblies is as shown in Table 3-9 of the CDA (Ref. 7.7). A high value of 368 WPs containing commercial spent nuclear fuel assemblies is assumed to be emplaced in the year 2016. In that year, it is assumed that the wet assembly transfer machine will transfer 10,519 assemblies from the cask unloading pool to the assembly staging pool into assembly handling baskets (one lift per assembly is required). Also in year 2016, the wet assembly transfer machine is assumed to load a total of 2088 baskets (822 baskets containing BWR assemblies and 1246 baskets containing PWR fuel assemblies) (Ref. 7.7) onto the incline basket transfer cart (one lift per basket).

This assumption is used in Section 5.3, Section 6.3 and Attachment IV.

3.4.4 Both the conservative and best estimate drop events are assumed to occur with the lifting grapples in the assembly lifting machines raised to the maximum height. It is conservatively assumed that there is no intervening equipment to shorten the drop between the dropped assembly/basket and the target assembly/basket, or between the target assembly/basket and the floor.

This assumption is used in Section 5.3, Section 6.3 and Attachment IV.

3.4.5 It is assumed that maximum drop heights are based on the latest available drawings and blueprints for the ATS (Refs. 7.27, 7.28) as well as assumed lengths for the shortest PWR and BWR assemblies used in commercial nuclear facilities.

This assumption is used in Section 5.3, Section 6.3 and Attachment IV.

3.4.6 The PWR fuel type for DBEs involving CSNF is assumed to be an Advanced Nuclear Fuel (ANF) 15 x 16 assembly from the Yankee Rowe Facility having an assembly

length of 111.8 in (Ref. 7.13). The BWR fuel type is assumed to be an ANF 11 x 11 assembly from the Big Rock Point facility having a length of 83.97 in (Ref. 7.13).

This assumption is used in Section 5.3, Section 6.3 and Attachment IV.

3.4.7 It is assumed that a drop of a spent fuel assembly or basket of assemblies will result in a breach of 10% of the fuel rods for conservative calculations and 100% of the fuel rods for best estimate calculations, regardless of the drop distance. This is assumed to be conservative, however, there is no licensing precedence which suggests a design basis drop height for commercial spent fuel assemblies.

This assumption is used in Section 5.3, Section 6.3 and Attachment IV.

3.4.8 Reserved.

3.4.9 In the event trees presented in Attachment IV, nominal fuel (labeled as 50% BWR or 50% PWR) is assumed to be fuel with burnup and enrichment characteristics which bounds approximately half of the commercial fuel assemblies handled by the ATS and represents the fuel nominally handled in the ATS. Fuel characteristics for 50% SNF fuel are based on Reference 7.7, Key 004.

This assumption is used in Section 5.3, Section 6.3 and Attachment IV.

3.4.10 It is assumed that there is equal probability (i.e., probability of 0.5) that either nominal or bounding fuel will be in the ATS when a drop event occurs.

This assumption is used in Section 5.3, Section 6.3 and Attachment IV.

3.4.11 In a loss-of-offsite power event, the mechanical failure rate (per demand) of the assembly transfer machine brake clutch to engage and prevent the drop of a suspended load is assumed to be 3.04E-04 per demand (Ref. 7.55).

This assumption is used in the ATS loss-of-offsite power event tree (events ATS 026 through ATS029) in Attachment IV.

3.5 Disposal Container Handling System Assumptions

3.5.1 It is assumed that the maximum number of DCs handled per year is 524 (Ref. 7.7, Key 003).

This assumption is used in Section 6.4 and Attachment V.

3.5.2 It is assumed that the sealed DC is designed to withstand a vertical drop from a height of 2-m on its end without breaching (Ref. 7.9, TBV-245).

This assumption is used in Section 5.4, Section 6.4 and Attachment V.

3.5.3 It is assumed that the sealed DC is designed to withstand a horizontal drop from a height of 2.4-m on its side without breaching (Ref. 7.9, TBV-245).

This assumption is used in Section 5.4, Section 6.4 and Attachment V.

3.5.4 It is assumed that the sealed DC is designed to withstand a 2.3MT object falling 2-m onto the end of the DC without breaching (Ref. 7.9, TBV-245).

This assumption is used in Section 5.4, Section 6.4 and Attachment V.

3.5.5 It is assumed that the sealed DC is designed to withstand a tipover from a vertical position with slap down onto a flat, unyielding surface without breaching (Ref. 7.9, TBV-245).

This assumption is used in Section 5.4, Section 6.4 and Attachment V.

3.5.6 It is assumed that the heaviest DC is the Naval Fuel DC with a loaded mass of 83,000-kg (Ref. 7.8).

This assumption is used in Section 5.4, Section 6.4 and Attachment V.

3.5.7 It is assumed that the DC outer length is between 3.70-m and 6.20-m (Ref. 7.9, TBV-246).

This assumption is used in Section 5.4, Section 6.4 and Attachment V.

3.5.8 It is assumed that the DC outer diameter is between 1.25 m (4.1 ft) and 2.00 m (6.6 ft) (Ref. 7.9, TBV-246).

This assumption is used in Section 5.4, Section 6.4 and Attachment V.

3.5.9 It is assumed that the initiating event frequency for a crane drop is 1.4×10^{-5} per lift, based on heavy-lift crane data from ~~the U.S. Navy~~ (Attachment X).
Newport News Shipbuilding JAK 11/12/98

This assumption is used in Section 5.4, Section 6.4 and Attachment V.

3.5.10 It is assumed that the two-block crane event (i.e., drop from the maximum height physically possible) probability is 0.24. In effect, this assumes that 24% of all crane drops are two-block events. This is based on heavy-lift crane data from ~~the U.S. Navy~~ Newport News Shipbuildin (Attachment X).

This assumption is used in Section 5.4, Section 6.4 and Attachment V. JAK 11/12/98

3.5.11 It is assumed that the equivalent drop height for a DC slapdown/tipover (for particulate release calculation) is equal to the distance from the ground to the top of the longest DC (6.20-m).

This assumption is used in Section 5.4, Section 6.4 and Attachment V.

3.6 Waste Emplacement and Subsurface Facility System Assumptions

3.6.1 It is assumed that the design basis of the WP precludes breach by dropping or impact during the subsurface transportation and emplacement activities (Ref. 7.7).

This assumption is used to calculate offsite doses in Section 5.5, Section 6.5 and Attachment VI.

3.6.2 It is assumed that the WP, while in a vertical orientation, can withstand the impact of a 25 MT (55,000 lbs.) object falling 3.1-m onto the side of the WP without breaching (Ref. 7.9, TBV-245).

This assumption is used to calculate offsite doses in Section 5.5, Section 6.5 and Attachment VI.

4. Use of Computer Software

4.1 Software Approved for QA Work

No software approved for QA work was used in this calculation.

4.2 Software Routines

All frequency and dose calculations performed to support this preliminary "scoping" analysis were generated with Lotus 123 Release 5 spreadsheets, and run on Pentium personal computers. A single software routine, based on the Lotus 123 Release 5 platform, was used to calculate doses for each of the DBE scenarios analyzed.

The variable input parameters used to calculate doses are described in Sections 2.2.1 through 2.2.8. The process which was used to calculate doses is described in Attachment IX, and includes a sample calculation from beginning to end. Attachment IX also provides hand calculations for a sample problem, which verify the results obtained from the spreadsheet routine. All dose results presented in this calculation were generated by the spreadsheet routine and verified by visual inspection and/or hand calculations.

JAK 11/12/98

The LWR ~~Radiological PC~~ characteristics Database (Ref. 7.12) was utilized to generate the radionuclide source terms (in units of Curies/Fuel Assembly) for the 50% Average PWR and 50% Average BWR fuel characteristics (see Section 2.2.1). All other source terms were taken from Reference 7.11, *Source Terms for Design Basis Event Analyses*. The Characteristics Database and all modules are "To BE Verified" (TBV-455) pending review of Deficiency Report ~~#132~~ ~~LV~~ VA MO-98-D-132.

5. Calculations

5.1. Carrier/Cask Transport System (CCTS)(SU16), Carrier Preparation Building Material Handling System (CMHS)(SU08) and Carrier/Cask Handling System (CCHS)(SU09)

JAK 11/19/98

5.1.1 System Description/Function (Refs. ~~7.72,~~ 7.67, 7.68)

JAK 11/12/98

The Carrier/Cask Transport System moves transportation casks (rail and truck) and their carriers between the waste entry point of the MGR, the cask staging shed, and the waste handling facilities. The Carrier Preparation Building (CPB) facilitates the preparation of a waste transportation cask for entering the waste handling facilities or for leaving the repository. This system will house the equipment and support systems required for receipt/dispatch of transportation casks, removal/installation of personnel barriers and impact limiters, inspection of transportation casks, and staging carriers awaiting transfer to other repository facilities or offsite.

The Carrier Preparation Building Material Handling System receives and inspects rail and truck shipping casks from the Carrier/Cask Transport System. Carrier preparation operations for carriers/casks received at the MGDS include performing a radiation survey of the carrier and cask, removing the personnel barrier, sampling for contamination, measuring the cask temperature, and removing the impact limiters. The shipping operations for carriers/casks leaving the MGDS include installing the impact limiters, radiological survey of the cask, and installing the personnel barrier.

The Carrier/Cask Handling System performs the functions required to prepare shipping casks for waste unloading, empty shipping casks for re-shipment, and empty non-disposable canisters for disposal. The system is located in the Waste Handling Facility, which includes multiple cask handling stations to maintain the waste emplacement and shipping schedules. Incoming casks are prepared for waste unloading by unloading the casks from the carrier (Carrier/Cask Transport System), inspecting the cask, and removing the lid (in the Assembly Transfer System or Canister Transfer System.)

The equipment used in these systems include site prime movers, rail cask carriers, truck cask carriers, remotely operated overhead bridge cranes, gantry cranes, gantry mounted manipulator, impact limiter sling/spreader bars, water washdown device, lifting yokes, and transfer carts.

5.1.2 Preliminary DBEs

The Preliminary DBEs presented in Table 5.1-1 are based on events presented in the Preliminary Hazards Analysis (PHA) (Ref. 7.10) and the reference VA design (Ref. 7.26). The internal events postulated for the CCTS included a diesel fuel fire initiated by the site prime mover (SPM) and a drop of the transportation cask from the carrier cradle initiated by gross failure of the carrier or cask hold-downs. Seismically induced cask drop events were also analyzed in this report (see Section 5.8). Consequences for the diesel fire were not assessed because transportation casks are required to withstand a "...hydrocarbon fuel/air fire of sufficient extent, and in sufficiently quiescent ambient conditions, to provide an average emmissivity coefficient of at least 0.9, with an average flame temperature of at least 800°C (1475°F) for a period of 30 minutes..." per the provisions in 10 CFR 71.73(c) (Ref. 7.59).

The dose consequences for twelve different casks, with a capacity range from 7 to 61 BWR assemblies and 3 to 26 PWR assemblies, and with drop heights from 4.1 meters (61-BWR) to 7.2 meters (various 2-block events), were determined for carrier/cask drop events (Attachment II). The removal of the impact limiters changes the design basis drop height from 9-m (30-ft) (Assumption 3.2.2) to an unknown height because analysis of cask drops without impact limiters are not required by 10 CFR 71 (Ref. 7.59). It was assumed that the design basis drop height without impact limiters is 2-m (approximately 6.6 feet) (Assumption 3.2.2) due to Table 5.1.1-2 of RAI 12-8 of the responses to the NRC's RAI on the CISF TSAR (Ref. 7.60). Consequently, it was assumed that a drop greater than 2-m would cause a breach of the cask. This assumption must be revised if drop heights lower than 2-m (80 inches) are obtained for cask systems not contained in RAI 12-8. Table 5.1-1 lists the preliminary internal DBEs considered for the CCTS, CMHS and CCHS.

Table 5.1-1 - Preliminary Internal DBEs

Carrier/Cask Transport System
Fire/explosion as result of ignition of diesel fuel of site prime mover
Drop from carrier cradle during transport to CPB
Carrier Preparation Building Material Handling System
Impact limiter sling/spreader bar failure
Drop of impact limiters onto cask by CPB bridge crane
Canister/Cask Handling System
Crane two-block drop of cask
Crane drops cask during normal lifts
Crane drops cask onto transfer cart during normal lifts
Cask slapdown after drop during normal lift
Cask slapdown due to failure of transfer cart support

The cask arrival scenario (Key 001 of Reference 7.7, Assumption 3.2.4) combined with the heavy-haul drop frequency (Assumption 3.2.3) was used to determine the frequency of cask drop events. The frequency of the postulated DBEs range from 1.4E-6 to 2.5E-3 per year. These events are credible and are classified as Category 2 per 10 CFR 60.

Refer to Section 6.1 for a more detailed discussion of the DBE results.

5.2 Canister Transfer System (SU11)

5.2.1 System Description/Function (Ref. 7.70)

The Canister Transfer System (CTS) receives transportation casks without impact limiters containing large and small disposable canisters, unloads the canisters from the casks, stores the canisters in a shielded lag storage area as required, and loads them into Disposal Containers (DCs). Small canisters are loaded directly from the transportation cask into a DC, or are stored until enough canisters are available to fill a DC. Large canisters (e.g., Navy) are not stored but rather loaded directly from the transportation cask into a DC.

The Canister Transfer System is designed to accommodate numerous waste forms in disposable canisters, including Defense High Level Waste (DHLW) glass, Commercial Spent Nuclear Fuel (CSNF), and DOE Spent Nuclear Fuel (DSNF). The DSNF includes approximately 250 different types of fuel and for most of these, the source terms are presently unknown. For the purpose of this analysis, the DOE N-reactor fuel source term (handled in a Multi-Canister Overpack (MCO)) was obtained and used for the dose assessment of DSNF in the Canister Transfer System. Other source terms may be more limiting than the N-reactor fuel and will be considered in future analyses, as additional information becomes available.

Each of the two identical canister transfer lines contains an airlock, cask preparation and decontamination area, and a canister transfer cell. Remote handling equipment consists of cask transfer carts, cask preparation manipulators, and equipment for sampling, cask unbolting, lid removal and decontamination. The canister transfer hot cells include a canister transfer station and DC transfer cart supported by remote handling equipment including a bridge crane (sized to handle the largest canisters), DC loading manipulator, and a suite of large/small canister lifting fixtures. The HLWC canister transfer operation requires two lifts per canister; one lift from the transportation cask to the lag storage area, and another lift from the lag storage area to the DC. A commercial SNF canister will require one lift from the transportation cask to the disposal container. The maximum, normal lift height for the HLWC is approximately 6.7 meters (22 feet) above the operations floor. The worst-case postulated HLWC design basis event considers a drop of one canister from 15 meters (49 feet), the maximum height of the crane. The impact distance will vary based on the length of the disposable canister.

The maximum, normal lift height for a Multi-Canister Overpack (MCO) loaded with N-Reactor fuel is approximately 6.3 meters (20.6 feet) above the operations floor. The worst-case postulated MCO design basis event considers a drop of one canister from the maximum height of the crane (i.e., 9.2 meters [30.2 feet]). Since the MCO is designed to withstand only a 0.6-meter (2.0-foot) (Ref. 7.52) vertical drop on reinforced concrete, the MCO is not expected to withstand a drop from the normal lift height of 6.3 meters (20.6 feet) or from the MCO 2-block crane height of 9.2 meters (30.2 feet) in the CTS.

Preliminary analyses include dose calculations for vitrified high-level waste canisters (HLWC), canistered PWR/BWR design basis commercial SNF assemblies, and MCOs loaded with N-Reactor fuel. As source terms for other types of DOE-owned spent nuclear fuel become available, additional analyses will be performed.

5.2.2 Preliminary DBEs

Reference 7.25 contains the internal HLWC DBE scenarios considered for the CTS. Seismic initiated DBEs were not analyzed in Reference 7.25. Seismic DBEs are presented in Section 5.8 of this analysis.

The types of HLWC DBEs considered in Reference 7.25 for the CTS included collisions, drops onto sharp objects, slapdowns, and potential decontamination system missiles. Reference 7.25 determined that the bounding DBE for the CTS for vitrified HLWCs is a 35-foot crane drop due to human error. Because canisters containing commercial SNF may be received at the repository, this report also considered the consequences of dropping a commercial SNF canister from 28.2 feet. The DBE with commercial SNF was, in fact, found to result in the largest dose. This bounding event is a drop from the maximum crane height onto the CTS floor resulting in a breach of one canister. Different drop heights may be encountered for each event due to the differences in lengths of the various disposable canisters. The dose results for all DBEs involving canistered defense high-level waste and commercial SNF are presented in Attachment III.

Reference 7.49 evaluated the internal MCO DBE scenarios considered for the CTS. Reference 7.50 determined that the bounding MCO DBE for the CTS is a 30.3-foot crane drop. This event is a drop from the maximum crane height onto the CTS floor resulting in the breach of a single MCO. Based on Assumption 3.3.10, the calculated MCO drop frequency is 5.6E-4 drops per year. Therefore, since this frequency is between 1.0E-6/yr and 1.0E-2/yr, the bounding MCO drop is determined to be a Category 2 event.

Preliminary MCO DBE analyses (References 7.49 and 7.50) have been performed to calculate maximum allowable radionuclide releases from the Waste Handling Building (WHB) and expected building accident release source terms. Hydrogen and uranium hydride could be generated from uranium/water reaction inside an MCO during interim storage at Hanford Canister Storage Building (CSB) or during subsequent transportation to the proposed repository. Hydrogen/uranium hydride coming out of a breached MCO could ignite after contacting the air in the CTS hot cell. Reference 7.50 shows that H_2/UH_3 explosion overpressure resulting from 1.3 kg of residual water in an MCO could potentially challenge the integrity of the WHB HEPA filters. Based on these results, a limit of 1.3 kg of free and bound water per MCO, and corresponding limits on the amounts of hydrogen and uranium hydride have been established in the Disposability Interface Standard (DIS). The purpose of placing a water inventory limit on an MCO is to prevent a hydrogen/uranium hydride explosion/combustion event that could potentially result in overpressure failure of the WHB building HEPA filters.

A total of 400 MCOs are expected to be received at the proposed repository after 20-40 years of interim storage at Hanford CSB. Based on a review of data on bound water and particulate content in the MCO, it is apparent that after the cold vacuum drying process, some MCOs will not meet the Disposability Interface Specification (DIS) requirement of 1.3-kg of water per MCO (Ref. 7.58). It is expected that Hanford will come up with an MCO certification program that will ensure that the amounts of water, hydrogen, and uranium hydride in an MCO meet the DIS requirement. Specifically, Hanford will be required to identify those MCOs that do not meet the DIS requirement and remove them for further treatment. It is expected that stringent administrative controls at Hanford will prevent MCOs containing quantities of hydrogen and uranium hydride that could challenge the integrity of the WHB HEPA filters from being received at the repository.

It is estimated that 1 out of 400 MCOs (see Assumption 3.3.11) received at the repository contains amounts of hydrogen and uranium hydride that could potentially challenge the integrity of the WHB HEPA filters. Therefore, the probability of failing the WHB HEPA filters due to H_2/UH_3 explosion overpressure is equal to 2.5E-3 (=1/400). The probability of HVAC or HEPA filter unavailability is 4.8E-4 (see Attachment VIII). The HEPA filter unavailability, P, is the sum of the unavailability to operate during the required mission time and the unavailability due to explosion overpressure:

P = HVAC unavailability to operate during required mission time + HEPA unavailability due to overpressure
= 4.8E-4+ 2.5E-3 = 2.98E-3

An event tree (see Attachment III) was constructed for the CTS DBEs using a crane failure and MCO drop from the normal lift height of 20.6 ft as an initiating event. As shown in the event tree, the worst

credible event sequence identified is CTS-107, an unfiltered pressurized event with slow oxidation (i.e, no ignition) of metallic uranium inside the MCO. A frequency of 1.34E-6 drops/yr is calculated for this event. The same event with HEPA filters available, i.e., CTS-106, has a frequency of 4.48E-4 drops/yr.

The above calculations show that an MCO drop from the normal lift height without HEPA filters is a Category 2 event.

Refer to Section 6.2 for a more detailed discussion of the DBE results for CTS-106 and CTS-107.

5.3 Assembly Transfer System (SU10)

5.3.1 System Description/Function (Ref. 7.69)

The Assembly Transfer System (ATS) prepares and unloads commercial spent fuel assemblies from the shipping containers or from lag storage, and loads the assemblies into Disposal Containers (DC) or lag storage. The system is also required to position containers at the unloading station, install contamination barriers, inspect the shipment, and remove empty containers and low level waste from the station.

The system utilizes remotely operated equipment to perform these functions including, a bare fuel transfer machine, fuel assembly grapples, container transfer carts, contamination barriers, inspection instruments, and low-level waste removal subsystems. The system is required to remove bare fuel from any truck or rail-shipping cask, and non-disposal canisters identified in the waste shipment schedules (Ref. 7.7). System dependability is sufficient to maintain the planned waste emplacement schedules, and the system is designed with interchangeability and redundancy such that failures and maintenance operations will not impact the schedule. The system is semi-automatic, such that the operator initiates the function to be performed, and the system automatically performs the tasks required for that function. The operator can operate the system manually and override the automatic operation at any time.

The Carrier/Cask Handling System interfaces with the ATS by transferring loaded casks and empty casks, receiving and shipping dual-purpose canister (DPC) overpacks off-site, and unloading and loading DPC overpacks on carriers. Three identical Assembly Transfer Lines are provided in the WHB. Each line includes an airlock, cask preparation area, pool area, and three hot cells for disposal canister (DC) loading and transfer operations. The three lines are identical and are independent of each other. The lines can be operated separately or concurrently to handle the waste transfer throughputs and to support maintenance operations.

5.3.2 Overview of the ATS Operations

Transportation casks are transferred into the ATS cask unloading area from the Cask/Carrier Handling System via the cask transfer cart and placed (using the cask unloading area bridge crane) into the cask preparation pit located in cask preparation and decontamination room number one (there are two rooms, each with one pit). The cask preparation consists of remote cask cavity gas sampling, cask venting, and cask gas and water cool-down. Next the outer lid is removed and the inner shield plug-lifting fixture is attached.

For casks containing assemblies without canisters, the cask is placed in the cask unloading pool and the inner shield plug is removed underwater. For casks containing a DPC, the cask outer and inner lids are remotely removed in the cask preparation pit. There the DPC is remotely sampled, vented and cooled. A DPC lifting fixture is remotely attached and the cask is placed in the cask unloading pool.

In the cask unloading pool the DPC is removed from the cask and placed in a DPC overpack. The DPC lid is then severed and removed. Spent fuel assemblies are then individually removed from an

open cask or from an open DPC and loaded into the assembly baskets positioned in the basket staging rack in the assembly staging pool. The assemblies are moved using the Wet Assembly Transfer Machine.

Using the Wet Assembly Transfer Machine, the assembly baskets are transferred from the basket staging rack to the incline transfer canal cart. The assembly baskets are then transferred through the inclined transfer canal by the incline transfer cart to the Assembly Handling Cell. Using the Dry Assembly Transfer Machine, the assembly baskets are transferred into one of the two assembly drying vessels. Each drying vessel has a capacity of six assembly baskets. The drying vessel is loaded with the number of assemblies that will exactly fill the respective DC being filled. If a DC with a capacity of 21 PWR spent fuel assemblies is being filled, then the appropriate number of baskets containing the 21 fuel assemblies is placed in the dryer.

After drying, the assemblies are individually removed from the assembly drying vessel using the Dry Assembly Transfer Machine. They are placed into a DC positioned below the DC load port. After installation of the DC inner lid sealing device, the DC is transferred by the DC transfer cart to the DC decontamination cell. Here the top area of the DC, the DC lifting collar, and the DC inner lid sealing device are all decontaminated and the DC is internally inerted. The DC is then transferred to the DC Handling System for lid welding.

Lids are replaced on the empty transportation casks in preparation and decontamination room number two. The casks are then decontaminated and inspected, and the casks are transferred to the Carrier/Cask Handling System for shipment off-site. Empty DPCs and severed DPC lids are loaded into an overpack and the overpack lid is installed. The overpack is decontaminated and inspected, and the overpack is also transferred to the Carrier/Cask Handling System for shipment off-site (Ref. 7.28).

5.3.3 Preliminary DBEs

The preliminary DBEs evaluated for the ATS are based on events presented in the PHA (Ref. 7.29) and the current design of the ATS (Ref. 7.28). The decontamination system missile event identified in the PHA was determined to be not applicable since SNF assemblies are enclosed in either the transportation cask or the DC during all decontamination system activities. Since the DCs will be sealed as part of the DC Handling System, fuel damage by burnthrough during the welding process and fuel damage by laser radiation/heat were considered in the DC Handling System analysis (Section 5.4). Events involving the movement of SNF assemblies with cranes, as described in the PHA, were not considered since all fuel movement will be accomplished with the wet and dry assembly transfer machines. In addition, DBE scenarios involving transportation casks in the ATS were not evaluated because they are bounded by the transportation cask events identified in the Carrier/Cask Handling System (Section 5.1).

In addition to the design basis events proposed in the PHA, potential events associated with the cask unloading pool and the wet staging pool were considered. These events included failure of the pool water cooling system as well as failure of the pool structural integrity. While the spent fuel is in passive storage in a pool, decay heat and the modest pressure within the fuel rods are the only driving forces for dispersal of the radionuclides contained in the spent fuel. To minimize these forces, spent fuel is kept under water for at least a year after discharge from a reactor before it is transferred out of the pool.

The preliminary design of the ATS pool system is being accomplished in accordance with American National Standard ANSI/ANS-57.7 (Ref. 7.24). This standard stipulates that the heat storage capability of the storage pool must allow adequate time for corrective action in case of a breakdown of the cooling system. In the event of an earthquake or other extreme natural phenomena, sufficient makeup water must be available to maintain safe storage conditions. It is also stipulated that the capability to recover from loss of cooling must be provided before the design limits of the pool structures are exceeded and before bulk boiling of the storage water occurs. According to the latest

ATS pool design information (also in accordance with ANSI/ANS-57.7), the cask unloading pools have been designed such that a dropped cask cannot impact on stored fuel and shall be designed to withstand, without loss of functional integrity, the impact of the maximum load over the pool dropped into the pool from the highest position attainable by the load.

There is no permanently installed piping in the design that could serve as a siphon to lower the water level below the minimum fuel level. The pool structures (stainless steel liners and concrete shells) have been designated Important to Radiological Safety and, therefore, must be seismically qualified to withstand a design basis earthquake. Thus, no design basis events have been identified in which the pool structures or liners are breached or in which the heat content of the pools exceeds the established guidelines. Therefore, events involving the release of radiological material from the pools due to failure of the pools, failure of pool water cooling equipment, or failure of pool water makeup equipment were not analyzed. In addition, events such as a drop of a transportation cask or DPC into a pool leading to damage to the pool or liner were not evaluated; these events will be evaluated once the pool design is finalized.

The ATS contains two distinct ventilation confinement zones. The ATS hot cells are primary ventilation confinement zones while the ATS pools are secondary ventilation confinement zones. Therefore, events that occur in the hot cell use an HVAC unavailability of 2.5E-5 (Assumption 3.1.11) and events that occur in the ATS pool use an HVAC availability of 4.8E-4 (Assumption 3.1.11) for the applicable event trees in Attachment IV.

As indicated in Assumption 3.4.5, the DBE maximum drop heights evaluated were based on the latest drawings and blueprints for the ATS design (Refs. 7.27, 7.28), as well as the shortest PWR and BWR assembly lengths used in commercial nuclear facilities. The shortest assemblies were used to give the greatest drop heights and thus the greatest generation of particulates upon impact. All of the DBEs evaluated in the ATS were vertical drops onto the cell floor, pool floor, empty DC, or onto another assembly or basket. The preliminary events and the range of drop heights analyzed are shown in Table 5.3-1 below:

Table 5.3-1 ATS Preliminary DBEs

Event Group	Design Basis Event	Scenario Description
Vertical Drops and End Collisions	Assembly vertical drop in the cask unloading pool or the assembly staging pool during transfer from a transportation cask or DPC into an assembly basket	Approximately 30- to 40-foot drop of one PWR or BWR assembly onto pool floor (from maximum height in the wet assembly transfer machine assembly handling tube) with one assembly breached
		Approximately 30- to 40-foot drop of a basket containing 4-PWR or 8-PWR assemblies onto pool floor (from the maximum height from the wet assembly transfer machine assembly basket hoist) with all 4 assemblies breached
	Assembly vertical drop in the assembly handling cell from the dry assembly transfer machine	Approximately 30- to 40-foot drop of a basket containing 4-PWR or 8-BWR assemblies onto another basket of 4 PWR or 8 BWR assemblies in the drying vessel (from the maximum height from the dry assembly transfer machine assembly basket hoist) with all assemblies breached. In addition, this event sequence was also examined assuming a loss-of-power initiator. This event will bound the drop of an individual assembly into the dryer as the assemblies are being moved into the DC.
		Approximately 2- to12-foot drop of one SNF assembly (PWR, BWR, respectively) onto the cell floor (from maximum height in the dry assembly transfer machine fuel assembly enclosure) with one SNF assembly breached

Event Group	Design Basis Event	Scenario Description
		Approximately 34- to 44-foot drop of one SNF assembly (PWR, BWR, respectively) into the empty DC (from maximum height in the dry assembly transfer machine fuel assembly enclosure) with one assembly breached
		Approximately 17- to 37-foot drop of an SNF assembly (PWR, BWR, respectively) onto another assembly in the DC (from maximum height in the dry assembly transfer machine fuel assembly enclosure) with both assemblies breached
		Approximately 5- to 11-foot drop of a basket containing 4-PWR or 8-BWR assemblies, respectively, onto cell floor (from the maximum height from the dry assembly transfer machine assembly basket enclosure) with all 4 or 8 assemblies breached
		Approximately 10- to 16-foot drop of a basket containing 4-PWR assemblies or 8-BWR assemblies, respectively, onto another basket of 4-PWR assemblies or 8-BWR assemblies in the assembly drying station (from the maximum height from the dry assembly transfer machine assembly basket enclosure) with all 8 or 16 assemblies breached

The list of DBEs can be divided into two groups: those that occur in the cask unloading pool and the assembly staging pool (wet drop events) and those that occur in the assembly handling cell (dry drop events). There is a potential to drop assemblies in the pool areas when being moved with the wet assembly transfer machine as well as a potential to drop the baskets containing the SNF assemblies from the dry assembly transfer machine when they are lifted from the inclined transfer canal basket and placed in the assembly dryer. In addition, there is a potential to drop individual assemblies when they are lifted individually from the assembly baskets in the dryer, moved (again with the dry assembly transfer machine), and lowered into the DC.

The frequency of drops during fuel handling at commercial nuclear power plants was determined to be 1.8E-5 drops per lift per Reference 7.23. This same frequency was assumed to be valid for the fuel handling operations considered in this analysis (Assumption 3.4.1). The maximum yearly emplacement of DCs is predicted to occur in the year 2016; in that year, 368 DCs containing SNF are expected to be placed into the repository (Ref. 7.7). Based on the calculated drop frequency, the expected rate of filling the DCs (one lift per assembly basket to transfer the basket to the dryer and one lift per individual assembly to transfer each assembly from the dryer to a DC), the expected drop frequency for BWR assembly baskets dropped by the dry assembly transfer machine is 1.48E-2 drops/year (822 BWR baskets/year x 1 lift/basket x 1.8E-5 drops/lift). The expected drop frequency for PWR assembly basket is 2.28E-2 drops/year (1266 PWR baskets/year x 1 lift/basket x 1.8E-5 drops/lift). For individual assemblies, the expected drop frequency is 1.89E-1 drops/year (10,519 assemblies/year x 1 lift/assembly x 1.8E-5 drops/lift). The results of all the frequency and dose calculations performed for DBEs in the ATS are presented in Table IV-1 of Attachment IV. A summary of the bounding ATS events is included in Section 6.3.

Attachment IV presents the event trees developed for the initiating events involving drops of individual assemblies or full baskets containing SNF assemblies from the wet and dry assembly transfer machines. The event tree sequences indicate the frequency of each drop event, irregardless of the consequences of the event. Dose consequences for each event sequence are presented in Table IV-1 of Attachment IV.

The first event tree (events ATS001-004) is representative of a PWR basket drop. As such, this tree is applicable to an event involving an approximate 16-foot drop of a basket containing 4-PWR assemblies onto either the cell floor or another basket of 4-PWR assemblies located in the assembly

dryer. The second event tree (events ATS005-008) is applicable to an event involving an approximate 25-foot drop of a basket containing 8-BWR assemblies onto either the cell floor or another basket containing 8-BWR assemblies located in the assembly dryer. The drop heights differ for a BWR drop versus a PWR drop because of the difference in overall height of the PWR and BWR assembly baskets. The shortest BWR assembly basket will have a height of 3.7 meters (12 feet 3 inches); the shortest PWR assembly basket will have a height of 5.4 meters (17 feet 9 inches) (Ref. 7.28).

The third event tree (events ATS 009-012) and fourth event trees (events ATS013-016) depict frequencies for event sequences involving the dropping of individual PWR and BWR fuel assemblies, respectively. The fifth tree (events ATS017-020) and sixth tree (events ATS021-024) depict frequencies for event sequences involving the dropping of baskets of PWR and BWR assemblies in the pool, respectively.

The last event tree (events ATS025-029) is applicable to the loss-of-offsite power event. This event tree is applicable to both PWR and BWR fuel baskets/assemblies since the event frequency (for loss of power resulting in mechanical failure) is dependent on the failure of the components associated with the electrical system and dry assembly transfer machine, not on throughput.

The assignment of frequency categories, as well as a summary of the dose consequences of the various drop events involving full assembly baskets and individual assemblies, is also provided in Attachment IV. Refer to Section 6.3 for a more detailed discussion of the DBE results.

5.4 Disposal Container Handling System (SU13)

5.4.1 System Description/Function (Ref. 7.71)

The purpose of the DC Handling System (DCHS) is to prepare empty DCs for loading of nuclear materials, transfer DCs to and from the Assembly and Canister Transfer Systems, weld the inner and outer lids, temporarily store loaded DCs before or after welding (as needed), tilt DCs to horizontal, and load DCs onto the Waste Emplacement transporter. The system also transfers DCs to the Waste Package Remediation System as needed. It should be noted that DCs are assumed to be waste packages (WPs) when the outer DC lid is successfully welded and tested. The term WP is used throughout this analysis to indicate a DC that has been loaded and successfully sealed.

Loaded, unsealed DCs enter the DCHS from either the Canister Transfer System (CTS) or the Assembly Transfer System (ATS). DCs from the CTS arrive without a lid whereas DCs from the ATS come equipped with a temporary inner lid sealing assembly. The DC is lifted a total of 3-4 times in the DC Handling System. The DC is first lifted a nominal height of 0.6-m (2.0 feet) onto the welding station turntable or lifted a nominal height of 0.3-m onto the DC staging area fixture for temporary lag storage prior to welding. After the welding operation, the DC is either transferred to the staging area for lag storage or transferred to the Tilting Station where it is lifted a nominal height of 2.0-m (6.6 feet) onto the tilting fixture. The DC is then tilted to a horizontal position, placed on the horizontal transfer cart, and transported to the DC Transfer/Decontamination cell. The DC is horizontally lifted to a nominal height of 1.4-m (4.6 feet) in the Transfer/Decontamination cell, the horizontal transfer cart is removed, the DC is positioned onto the subsurface transporter, and the DC is transported to the underground emplacement area.

The primary DCHS equipment includes a DC bridge crane with lifting fixtures, a tilting station fixture, transfer carts, DC welding/inspection robots, welding station jib cranes, weld turntables, horizontal transfer cart, horizontal lifting system, and decontamination and inspection manipulator.

5.4.2 Preliminary DBEs

The Preliminary MGDS Hazards Analysis (Ref. 7.10) and the reference VA design drawings (Ref. 7.26) were used as a basis for identifying events that could potentially result in a radiological release.

Potential impact and drop events associated with normal handling of unsealed DCs were considered to be of primary importance due to the lack of confinement protection prior to welding the inner DC lid. Other postulated off-normal events (e.g., two-block crane drops) involved the failure of one or more SSCs to initiate an event which exceeded the DC design basis. The vertical lift of the DC onto the DC Tilting Station is the highest normal operational lift in the DCHS at approximately 2-meters for the shortest length DC. Aside from drop events, other events considered in the DCHS included collisions, slapdowns/tipovers, falling masses and a welding burnthrough.

Slapdowns/tipovers of an unsealed DC could occur at the welding station turntable or the staging area fixtures. Drop events could occur during lifts onto the welding station turntable, the staging area fixture, or at the horizontal lift system. Falling heavy objects could potentially breach the unsealed DC prior to welding, since its only protection is the temporary inner lid assembly, and falling objects with a mass greater than 2.3-MT could potentially breach the sealed DC. However, it is generally assumed that a severe seismic event (i.e., magnitude greater than the equipment design basis earthquake qualification) would be required to initiate the fall of any heavy mass that would have the potential to breach a sealed or unsealed DC. Table 5.4-1 contains a complete listing of the internal events which were evaluated for the DCHS.

Table 5.4-1 – Potential Events in the DCHS

Event Group	Event Description
Drops	Vertical crane drop of sealed WP or unsealed DC from normal operating lifts ranging from 0.6-m to 2.0-m
	2.5-m horizontal drop of sealed WP from horizontal lifting system
	Off-normal DC drop due to failure of one or more SSCs
Collisions	DC transfer cart collision with shield door
	DC transfer cart collision with heavy object
Slapdowns/Tipovers	Unsealed DC slapdown from transfer cart
	Unsealed DC slapdown from welding station turntable
	Unsealed DC slapdown from staging area fixture
	DC slapdown from Tilting Station
Falling Mass	DC bridge crane falls onto unsealed DC
	Horizontal lifting system falls onto sealed WP
	Welding equipment falls onto unsealed DC
Other	Welding burnthrough of inner DC lid

Table 5.4-2 contains the preliminary design basis events (DBEs) that were selected for further evaluation. Frequency and consequence analyses were conducted on the DBEs shown below to quantify their frequency of occurrence and estimate the public dose at the 5-km site boundary. Detailed calculations and related event trees for each event analyzed (DC01, DC02,... etc.) are shown in Attachment V. In addition to the internally initiated events (e.g., crane drops), two loss-of-power events were also analyzed for comparison.

Table 5.4-2 - Preliminary DCHS DBEs

Event Group	Event #	DBE Description	Location
Vertical Drop	DC01, DC02	6-m Vertical Drop (2-Block Crane Failure)	DC Tilting Station
Horizontal Drop	DC05, DC06	2.5-m Horizontal Drop of DC	Transfer/Decon
Loss-of-Power	DC03, DC04	LOP & 2-m Vertical Drop	DC Tilting Station
	DC07, DC08	LOP & 1-m Horizontal Drop	Transfer/Decon
Welding Burnthrough	DC13, DC14	Welding Burnthrough Inner DC Lid	Welding Station

The seismic DBEs, discussed in further detail in Section 5.8, are expected to bound all externally initiated DBEs in the DCHS. Refer to Section 6.4 for a more detailed discussion of the DBE results.

5.5 Waste Emplacement System (SS17) and Subsurface Facility System (SS01)

5.5.1 System Description/Function (Refs. 7.74 and 7.73)

The Waste Emplacement System transports the loaded and sealed Waste Package (WP) from the Waste Handling Building (WHB) to the subsurface emplacement area. This system operates on the surface between the North Portal and the WHB, and in the underground Ramps, Access Mains, and emplacement drifts. This system accepts the loaded WP onto a reusable rail car, moves the WP into the shielded transporter, transports the WP to the emplacement area, and emplaces the WP in the emplacement drift. The operation cycle is completed when the transport equipment returns to the surface WHB to receive another WP.

Major items and sub-systems of the Waste Emplacement System consist of the following (Ref. 7.44):

- A shielded transporter with a reusable rail car for the movement and transfer of the WPs. The transporter requires transport locomotives for movement.
- Transport locomotives for the transporter movement and control functions between the WHB and the subsurface repository.
- A remotely controlled emplacement gantry for the WP emplacement functions in the emplacement drifts. The gantry is self powered through a direct current third rail system.
- A gantry carrier for gantry transfer between the emplacement drifts and/or to the maintenance facilities. The gantry carrier requires a transport locomotive for the carrier movement and control functions.

The sequence of the subsurface WP handling process is as follows (Ref. 7.44):

- The WP, positioned on a reusable rail car, is moved into the shielded transporter at the surface WHB. A remotely controlled loading mechanism moves the rail car into and out of the transporter. The loading mechanism will be an integral part of the transporter.
- A pair of transport locomotives is used to move the transporter from the WHB, into and down the North Ramp, into the East or West Main, and to the vicinity of the designated emplacement drift. At the pre-selected emplacement drift location, one locomotive is uncoupled to allow the transporter, with the transporter doors facing the drift entrance, to be pushed into the emplacement drift turnout. Once the transporter is partway in the turnout, the transporter doors

and the drift isolation doors open remotely, then the transporter is pushed into contact with the Subsurface Emplacement Transportation System drift transfer dock.

The Subsurface Facility System encompasses the location, arrangement, size and spacing of the underground openings. This subsurface system includes accesses, alcoves, drifts, and subsurface boreholes. This system provides the following functions (Ref. 7.44):

- Access to the underground
- Emplacement of waste packages
- Openings to allow safe and secure work conditions
- Preserves the natural barrier
- Preserves the engineered barrier system.

5.5.2 Preliminary DBEs

This section presents an abbreviated summary of a preliminary analysis of potential Design Basis Events (DBEs) which was performed on subsurface operations in FY-97 per the QAP-3-9 analysis entitled *DBE/Scenario Analysis for Preclosure Repository Subsurface Facilities* (Ref. 7.44). The purpose of that design analysis was to provide definition, screening analysis, and consequence analyses of potential DBEs that involve preclosure operations within the scope of subsurface repository design and operations. The analysis examined a wide range of potential radiological release scenarios for both internal and external initiating events. Reference 7.44 was based on the *Preliminary MGDS Hazards Analysis* (Ref. 7.10) which was a qualitative analysis to identify potential radiological releases. Further, the subsurface analysis considers the design bases and supporting analyses presented in the QAP-3-9 analysis *Waste Package Design Basis Events* (Ref. 7.23).

It is noted that the release sequences involve at least two independent failures: the initiating event and breach of a waste package. Because of uncertainties, the prior analysis took a conservative position wherein event sequences whose upper bound frequencies exceeded 1E-6 /yr were defined as credible, Category 2 DBEs. This analysis utilized the scenarios and event frequencies from Reference 7.44 and applied the methodology described in Section 2.0 to arrive at the results specified in Section 6.5.

Because of the division of functions, the potential DBEs included in the study of subsurface facilities include some events that may occur at or near the surface, i.e., during the transport of waste packages from the Waste Handling Building, through the North Portal, and down the North Ramp. Other events may occur only in the subsurface in or near emplacement drifts. The transport and emplacement operations occur during the 24 years of active emplacement operations of the preclosure phase and during a caretaker period should a retrieval campaign be initiated. Other events like rockfall in the emplacement and main drifts may potentially occur during the entire monitored preclosure phase which may extend to 300 years.

The primary defense against release of radionuclides for the subsurface operations is the sealed boundary of the WP. The design bases of the WP preclude breach by dropping or impact during operational mishaps like derailment of transporter and emplacement equipment and dropping during handling operations. In addition, the WP is designed not to breach when impacted by a 25 MT (55,000 lbs.) object falling 3.1-m onto its side (Assumption 3.6.2).

Therefore, potential release scenarios are defined as those where a) the event sequence results in impacts beyond the design bases of the WP; or b) the WP is assumed to be defective (e.g., due to a manufacturing defect or seal welding flaw that are not caught by quality control) and is breached by an impact that would not breach a full-strength WP. If the design bases of the waste package are assumed to preclude a breach for credible initiating events, sequences of type a) will all be Beyond Design Basis Events (BDBEs) and the only credible scenarios will be those involving defective WPs.

5.5.2.1 Internal Event Screening

The frequency and screening analysis in Reference 7.44 identified five internal scenarios as credible DBEs and having the potential for WP damage that could result in the release of radionuclides. The following scenarios were identified as either Category 2 DBEs or Beyond Design Basis Events with significant uncertainty:

- Transporter Derailment in Ramp or Main Drift with breach of defective WP;
- Runaway Transporter (with WP) derailing and crashing into wall of drift;
- Runaway Transporter (without WP) colliding with another loaded transporter;
- Emplacement Gantry WP Lifting Mechanism Fails with drop and breach of defective WP; and
- Rockfall and/or Ground Support Collapse onto Waste Package - Static Rockfall

The frequencies were estimated in Reference 7.44 through several approaches including a) application of actuarial data for derailments and runaways of commercial and mining transport equipment (censored for perceived operational conditions and procedures for the repository); and b) limited fault tree analyses of early design representations of mechanical, electrical, and control systems, including effects of software, human, and common-cause failures. Table 7.2-16 of Ref 7.44 (see Attachment VI, Table VI-2) summarizes the frequency evaluation of the internal events, including frequency ranges for both the initiating event and the sequence of events resulting in a release. Frequency ranges are assumed to be lognormally distributed and the best estimate is taken as the median. It is noted that the upper limit of the release frequencies extend above the 1E-6 /yr threshold for credible events, but the median values are all below the threshold.

Two events, runaway transporter (with WP) and rockfall onto a waste package, are shown in Table 5.5-1 as Category 2 events. The runaway transporter event (Table 5.5-1, #5)will be the subject of additional LA design studies in FY99 to demonstrate that subsurface transportation events which breach a waste package are beyond design basis events. The likelihood of a rockfall event (Table 5.5-1, #13A) is subject to considerable uncertainty (Table 5.5-1, Note 2) due to the lack of data. Studies planned for FY99 will provide data on the likelihood of rockfall and the maximum size of rock. This event will be reassessed when the probabilistic key block studies are completed. Attachment VI contains a summary of the scenarios and frequency analysis from Reference 7.44. The results of the dose assessment performed for this analysis are presented in Section 6.5

5.5.2.2 External Event Screening

Potential external event initiators were listed in the *Preliminary Hazards Analysis*. Many were screened out from further consideration as credible DBEs, as described in the following paragraphs. Among the external events, loss of offsite power and seismic events can potentially affect all surface and subsurface operations. Potential DBEs initiated by seismic effects on the transport and emplacement operations are discussed in Section 5.8. Most external events, however, potentially affect only the portion of the transport operations on the surface and were qualitatively screened out, particularly by assuming that operational rules will preclude transport and emplacement operations whenever there are local forecasts of severe weather, wind, temperatures, or range-fire conditions. Moreover, the consequences of such events are likely to result in derailment of the transporter train without impact beyond the design bases of the WP. Several external events are the subject of separate analyses and were not examined in this analysis. These events include aircraft crash, fire (range), industrial activity, military activity, and tornado.

A qualitative analysis of DBEs initiated by a loss-of-offsite-power was performed to identify potential scenarios for radiological consequences. A scoping analysis indicates that without backup power, a loss-of-offsite-power scenario that involves the drop of a WP during transfer operations between the transporter and an emplacement gantry has a frequency of approximately 5.6E-6/yr, assuming 0.2 loss-of-offsite-power events per year (Assumption 3.1.14) and the drop of a defective WP (2.8E-4/yr). With backup power available, e.g., using a battery on the transport locomotive, the frequency of the potential release scenario is reduced below the design basis threshold of 10^{-6}/yr.

Analysis indicates that a lightning strike in the vicinity of a transporter train during operations between the Waste Handling Building and the North Portal has a frequency of about 1.2E-5/yr. The frequency of a direct lightning strike on the transporter is estimated to be about 1.9E-7/yr and is classified as a beyond design basis event, based on analysis in Reference 7.44.

A class of events that could be potential initiators of release of radioactivity in the subsurface are described as Events in Repository Development Side that can impact the emplacement side; e.g., explosions creating missiles. No results are available at this time. Table 5.5-1 contains the preliminary DBEs that were identified for the subsurface facilities.

Table 5.5-1 - Summary of Internal and External Events for Subsurface Facilities

Event No.	Event Description(1)	DBE Category for Release Scenarios(3)
1	Transporter Derailment in Ramp or Main Drift	BDBE
2A	Emplacement Gantry Derailment - Normal Speed	BDBE
2B	Emplacement Gantry Derailment - Gantry Runaway	BDBE
3	Waste Package reusable car is ejected out of Transporter	BDBE
5	Runaway Transporter (with WP)	Category-2
7	Emplacement Gantry WP Lifting Mechanism Fails	BDBE
10	Rockfall/Ground Support Fall onto Transporter	BDBE
11	Rockfall/Ground Support Fall onto Locomotive	BDBE
13A	Rockfall and/or Ground Support Collapse onto Waste Package - Static Rockfall (2)	Treat as Category-2 (2)
13B	Rockfall and/or Ground Support Collapse onto Waste Package - Seismic Induced, Beyond DB Earthquake	BDBE
15	Fire/Explosion	Deferred to future analyses
16	Thermal Cycling of Waste Package	Deferred to future analyses
17	Thermal Cycling of Emplacement Drift Ground Support	Deferred to future analyses

Notes:

(1) Event categories are from PHA (Ref. 7.10); the particular initiators and event sequences analyzed in the present study has been modified to reflect concurrent conceptual design activities or events that were not considered in the PHA.

(2) Uncertainties in parameters used in analysis give a frequency range of 1.4E-10/yr to 3.4E-4/yr which extends into the credible range, however, the best estimate frequency is BDBE. A probabilistic key block analysis is planned to reduce this uncertainty. This event is treated as a Category 2 event until additional planned studies are completed.

(3) This column summarizes the potential radionuclide release scenarios that were considered. Events categorized as BDBE (Beyond Design Basis Events) are sequences of events whose frequencies are below the threshold of 1E-6/yr.

5.6 Waste Treatment Building (SU04) (Ref. 7.75)

The Waste Treatment Building System provides the structures and embedded subsystems that support the collection and disposal of site-generated low-level radioactive waste. The system is located on the surface within the radiological protected area of the MGR site. The system provides a controlled environment for the Site-Generated Radiological Waste Handling System (SU37) and protects related operations from the natural environments. The system's primary function is to confine contaminants and provide radiological protection to personnel.

The Waste Treatment Building System provides the civil structures and operational support systems necessary to process site-generated waste efficiently and to meet the Site-Generated Radiological Waste Handling System throughput rates. The system limits personnel radiation exposure to below established thresholds. The system protects Site-Generated Radiological Waste Handling System operations from natural and induced environmental conditions for the duration of the waste emplacement operation.

The Waste Treatment Building was not analyzed for potential preclosure internal DBEs. It is assumed that there will not be a sufficient radiological source term available which, if released during a DBE, could exceed the offsite dose limits for Category 1 or Category 2 DBEs. This assumption will be verified in future radiological safety analysis of the Waste Treatment Building, which will be performed as the design evolves.

5.7 Criticality Safety Summary

For the preclosure phase of the MGDS, 10 CFR 60.131(h) requires that the waste package be designed such that "nuclear criticality [k_{eff} plus bias and uncertainty < 0.95] is not possible unless at least two unlikely, independent, and concurrent or sequential changes have occurred in the conditions essential to nuclear criticality safety. Each system must be designed for criticality safety assuming occurrence of design basis events." Waste Package Operations is currently estimating the likelihood of those design basis events with the potential for affecting waste package criticality safety, and identifying event sequences which must be considered in designing the waste package to meet the preclosure criticality requirement (combinations of one unlikely event and all likely conditions).

Since neutron moderation is required for most waste forms to be capable of criticality, a conditional event for most criticality scenarios/sequences will be accidental moderation of the waste package by filling it with water, oil, or other hydrogenous fluid. This is generally expected to be an unlikely (if not incredible) event due to the general absence of sources of moderator in areas where the waste package is being loaded. Once sealed, the additional unlikely event of a waste package breach would also be required to allow moderator entry. A quantitative estimate of the frequency of accidental moderation is planned for later this year to confirm that it meets the definition of "unlikely" in 10 CFR 60.2. However, to meet postclosure criticality requirements, the waste packages will generally be designed such that they will be subcritical when flooded and correctly loaded.

Since multiple waste package designs are required to cover the wide range of commercial spent nuclear fuel assembly characteristics, misloading of a waste package with fuel which exceeds the criticality design basis of the package is a potential event which must be considered. Waste Package Operations has performed an analysis of the frequency of misload for PWR and BWR packages based on the preliminary loading procedures, the expected distribution of packages and their associated fuel assemblies, and standard methods for estimating the probabilities of operator errors and equipment failures. A decision tree was developed to determine the probabilities for all possible endstates of the loading operation (Ref. 7.66). The endstate probabilities for sequences resulting in misload of fuel that exceeds the criticality design basis of a package are summed to determine the total probability of misload. The total misload probability for all PWR waste packages is in the range of 5×10^{-5} to 6×10^{-6} per waste package (Ref. 7.66). The total misload probability for all BWR waste packages is 9.65×10^{-5} per waste package (Ref. 7.66). Based on these frequencies and the CDA Key Assumption 003 estimate of 4,792 PWR waste packages, and 2,875 BWR waste packages (Ref. 7.7),

misload of a package with fuel that exceeds the design basis is not likely to occur once during the operational period (Ref. 7.66). Therefore, misload is also considered an unlikely event, and does not have to be considered in combination with a flooded waste package.

5.8 Preliminary Seismic DBE Analysis

A seismic source-term and potential consequence analysis was performed as part of the effort to identify potential SSCs important to radiological safety. The purpose of this seismic DBE analysis was to identify those SSCs that must be designed to withstand a Design Basis Earthquake (DBEQ). Since two categories of vibratory-ground-motion DBEQs have been defined for the MGR, a principal objective of this analysis was to determine the appropriate seismic frequency category DBEQ that each SSC important-to-safety must be designed for. The two DBEQs are identified as Frequency-Category-1 and Frequency-Category-2, which are distinguished by different magnitudes (e.g., Frequency-Category-2 has a higher value of peak ground acceleration) (Ref. 7.30).

It should be noted that different values of the peak ground acceleration and other parameters are assigned to surface facilities than to subsurface facilities for either category of DBEQ; i.e., the acceleration in the subsurface is significantly lower than at the surface for the same earthquake. Although the principles of assigning DBEQ frequency categories to surface or subsurface facilities are the same, the impact on the respective facility design may be substantially different. This analysis does not address the mechanical or structural design issues nor does it address the parameters that characterize the respective DBEQs, other than the frequency of exceedance.

A conservative approach was used to assign SSC seismic frequency classifications based on the dose assessment of the applicable seismic event. Once an SSC is designed to withstand a given DBEQ, it is assumed to remain functional to prevent or mitigate a release of radionuclides during and after that level of DBEQ. It should be noted that this seismic classification addresses only radiological issues; more conservative seismic designs may be imposed due to other considerations such as throughput, cost, or investment risk. Effects of fault displacement DBEQs are not analyzed in this study. The primary defense against fault displacements is avoidance.

A systematic frequency analysis and dose assessment of seismic-initiated events in the MGR surface and subsurface facilities is presented in Attachment VII.

6. Results

All results presented in this calculation shall be treated as unqualified data. This document will not directly support any construction, fabrication, or procurement activity and thererfore is not required to be procedurally controlled as To Be Verified or To Be Determined in accordance with NLP-3-15.

6.1. Carrier/Cask Transport and Handling Systems

The DBEs shown in Table 6.1-1 were identified as bounding events (event which provide the highest dose for a group of similar events) for the CCTS, CMHS, and CCHS. The event frequencies and dose consequences for all events considered are presented in Attachment II.

Table 6.1-1 – Bounding Internal DBEs for the Carrier/Cask Transport & Handling Systems

Event #	Event Description	DBE Category	TEDE Dose at 5-km (rem)	
			Conservative	Best Estimate
CH10	6.9-m 2–Block Drop of 61-BWR Cask, No HVAC (1)	2	>5	1.4
CH11	6.9-m 2–Block Drop of 61-BWR Cask, HVAC Available (2)	2	0.013	5.2E-4
CH46	7.1-m 2-Block Drop of 26-PWR Cask, No HVAC (1)	2	>5	0.85
CH47	7.1-m 2-Block Drop of 26-PWR Cask, HVAC Available (2)	2	0.010	3.0E-4
CH07	4.1-m Drop of 61-BWR Cask, No HVAC (1)	2	>5	0.97
CH08	4.1-m Drop of 61-BWR Cask, HVAC Available (2)	2	0.56	3.8E-4
CH43	4.1-m Drop of 26-PWR Cask, No HVAC (1)	2	>5	0.58
CH44	4.1-m Drop of 26-PWR Cask, HVAC Available (2)	2	0.59	2.2E-4

(1) Current system design does not include HVAC confinement.
(2) Assumes HVAC confinement is available to mitigate radiological releases.

All events analyzed for the CCTS, CMHS and CCHS are frequency category 2 DBEs. The preliminary conservative dose estimate exceeds the limits established for category 2 events. This is driven by two factors; the current operational step of removing the impact limiters in the CPB, and the lack of HVAC confinement for operations conducted in these systems.

6.2 Canister Transfer System (SU11)

Attachment III contains the complete results of the frequency and dose calculations performed for events in the CTS. The credible bounding events are a 28.2-foot drop of one commercial SNF canister containing 44 BWR fuel assemblies (CTS006, CTS007) and a 30.3-foot drop of one MCO (CTS-106, CTS-107) onto the CTS floor. The conservative TEDE dose for the bounding DBE involving a commercial SNF canister, with HVAC (includes single HEPA filter) available, is 1.1E-2 rem at the 5-km site boundary. Without HVAC available, the event frequency (see CTS-007 in Attachment III) is beyond design basis.

The conservative TEDE doses for the analyzed DBE involving an MCO are 4.7E-3 rem with HEPA filters and greater than 5 rem without HEPA filters at the 5-km site boundary. HEPA filtration is currently included for the CTS in the reference VA design. The best estimate TEDE dose resulting from a breached MCO, whether mitigated or unmitigated, is expected to be much smaller than the conservative value.

This preliminary analysis of the CTS does not evaluate other waste forms that may be processed in the system. Over a 24-year period, 3,698 of the 12,022 canistered waste forms are expected to be DOE SNF, including N-Reactor Fuel (Ref. 7.7). The source terms (yet to be determined) for the other DOE SNF may produce greater radiological releases that would also require mitigation such as HEPA filtration to comply with applicable radiological release limits. The bounding internal DBEs for the CTS are shown in Table 6.2-1. Event trees and dose calculations for events considered in the CTS are included in Attachment III.

Table 6.2-1 – Bounding Internal DBEs for the Canister Transfer System

Event #	Event Description	DBE Category	TEDE Dose at 5-km (rem)	
			Conservative	Best Estimate
CTS006	28.2-foot vertical drop of CSNF Canister (44 BWR Assemblies) from 2-block crane position to floor, HVAC Available	2	1.1E-2	3.6E-4
CTS007	28.2-foot vertical drop of CSNF Canister (44 BWR Assemblies) from 2-block crane position to floor, HVAC Unavailable	BDBE (1)	>5 (2)	1.0E+0
CTS-106	20.6-foot vertical drop of MCO from normal lift height to floor, HVAC Available	2	4.7E-3	TBD
CTS-107	20.6-foot vertical drop of MCO from normal lift height to floor, HVAC Unavailable	2	>5	TBD

(1) BDBE = Beyond Design Basis Event ($<10^{-6}$/yr).
(2) For comparison purposes only - Best Estimate is used for BDBEs.

6.3 Assembly Transfer System (SU10)

The dose consequences for events involving the dropping of a basket from the dry assembly transfer machine onto a similar full assembly basket situated in the assembly drying station were the greatest of all the events considered; and, therefore are considered bounding. These consequences are summarized in Table 6.3-1. The event frequencies and dose consequences for all events considered are presented in Attachment IV.

Table 6.3-1 Bounding Internal DBEs for the Assembly Transfer System

Event #	Event Description	DBE Category	TEDE Dose at 5-km (rem)	
			Conservative	Best Estimate
ATS001, ATS003	16.5-foot 4-PWR basket drop onto another 4-PWR basket, HVAC Available	1 (2)	4.9E-03 (100% PWR, ATS001)	7.4E-05 (50% PWR, ATS003)
ATS002, ATS004	16.5-foot 4-PWR basket drop onto another 4-PWR basket, HVAC Unavailable	BDBE (1)	>5 (3) (100% PWR, ATS002)	2.0E-01 (50% PWR, ATS004)
ATS005, ATS007	25-foot 8-BWR basket drop onto another 8-BWR basket, HVAC Available	2	3.5E-03 (50% BWR, ATS005)	1.5E-04 (BWR DBF, ATS007)
ATS006, ATS008	25-foot 8-BWR basket drop onto another 8-BWR basket, HVAC Unavailable	BDBE (1)	>5 (3) (50% BWR, ATS006)	4.1E-01 (BWR DBF, ATS008)

(1) Beyond Design Basis Event.
(2) Doses limits for Category 1 events are presented on a rem per year basis.
(3) For comparison purposes only - Best Estimate is used for BDBEs.

Fuel type, as specified in the ATS event trees (Attachment IV), reflects the fuel being handled when the event is assumed to occur. Nominal fuel (labeled as 50% BWR and 50% PWR fuels) bounds the characteristics of approximately half the fuel to be handled by the ATS and represents the fuel nominally handled in this system. Otherwise, if fuel that is not nominal is being handled in the ATS when the event occurs, it is assumed to be bounding fuel (either 100% PWR fuel or BWR Design Basis Fuel). Therefore, based on the characteristics of all fuel to be handled in the ATS, it is assumed

that there is equal probability that either nominal or bounding fuel will be in the ATS when a drop event occurs.

A mitigation factor of 0.9997 (Assumption 3.1.13) was applied to all ATS event that considered HVAC available. The HVAC availability, presented as a conditional probability in the event trees (Attachment IV), depended on where the event was postulated to occur. Events in the hot cell used an HVAC unavailability of 2.5E-5 (Assumption 3.1.11), which is the calculated value for a primary ventilation confinement zone. Events in the ATS pool used an HVAC unavailability of 4.8E-4 (Assumption 3.1.11), which is the calculated value for a secondary ventilation confinement zone (see Section 2.2.9).

The credible, bounding events in the ATS are ATS001/ATS003 and ATS005/ATS007. The frequency of event ATS001/003, involving a 4-PWR basket drop onto another basket with the HVAC/HEPA filters available, is 1.14E-02 events/year; therefore, this event is a Category 1 DBE. The frequency of event ATS005/007, involving a 8-BWR basket drop onto another basket with the HVAC/HEPA filters available, is 7.40E-03 events/year, a Category 2 DBE.

The bounding loss-of-offsite power event occurs when the brake clutch on the dry assembly transport machine fails to engage due to loss-of-offsite power, resulting in the drop of a PWR assembly basket onto another in an assembly dryer. The consequences of this event with and without HVAC/HEPA filters available, depicted by event trees ATS026/ATS028 and ATS027/ATS029, are identical to the consequences of the 4-PWR basket drop events illustrated by ATS001/ATS003 and ATS002/ATS004, respectively. Loss-of-offsite power events assume that the passive HEPA filters remain functional for 24-hours following the event, and that leakage from the ATS is through the HEPA filters.

6.4 Disposal Container Handling System (SU13)

Table 6.4-1 shows the bounding internal events in the DCHS which exceed the DC design basis and could result in a radiological release. Attachment V contains event frequencies and dose calculations for all of the internal DCHS events which were considered. External events in the DCHS are expected to be bounded by the seismic initiated DBEs discussed in Section 5.8.

Table 6.4-1 – Bounding Internal DBEs for the DC Handling System

Event #	Event Description	DBE Category	TEDE Dose at 5-km (rem)	
			Conservative	Best Estimate
DC01	6-m vertical drop from DC bridge crane (2-block), HVAC Available	2	7.2E-3	6.1E-4
DC02	6-m vertical drop from DC bridge crane (2-block), HVAC Unavailable	BDBE	>5 (1)	6.0E-1
DC05	2.5-m horizontal drop from horizontal lift system, HVAC Available	2	4.5E-3	5.4E-4
DC06	2.5-m horizontal drop from horizontal lift system, HVAC Unavailable	BDBE	>5 (1)	3.6E-1

(1) For comparison purposes only - Best Estimate is used for BDBEs.

The bounding radiological events in the DC Handling System are a 6-m two-block DC drop by the bridge crane (DC01, DC02) and a 2.5-m horizontal drop by the horizontal lift system (DC05, DC06). Event sequences considered the probability that the HVAC system will be both available and unavailable when the event occurs. Both event sequences with HVAC available (DC01 and DC05) fall within the Category-2 frequency range. Events DC02 and DC06 pertain to bounding DC drops with the HVAC system unavailable to mitigate the radiological release. Both of the unmitigated events have a frequency less than 10^{-6} per year (Beyond Design Basis) and are shown for comparison purposes only.

The DCHS events were analyzed both with and without HVAC (HEPA filter) available in order to assess the impact of HVAC on the offsite dose consequences. The current design concept for the DCHS includes a single train HEPA filter (Ref. 7.17, Section 2.2.9). A detailed description of each event sequence analyzed for the DC Handling System is included in Attachment V.

In general, the DBE sequences with HVAC available have a frequency of occurrence in the Category 2 range or below, and have mitigated dose consequences well below 5-rem at the site boundary. The DBE sequences without HVAC available fall into the Beyond Design Basis Event category ($<10^{-6}$/yr) and do not require any further analysis.

6.5 Waste Emplacement System (SS17) and Subsurface Facility System (SS01)

Reference 7.44 presented offsite doses for two bounding events (rockfall and transporter runaway), although neither event is expected to remain a credible DBE. Additional work is ongoing to demonstrate, either by design or analysis, that these events have a frequency which is beyond design basis. The present analysis presents a re-analysis of the consequences of those original bounding scenarios from Reference 7.44, using the source terms described in section 2.2.1. The results are presented in Table 6.5-1 below.

The quantities of radionuclides that are potentially released in these bounding scenarios (and the conditional probability of WP breach and fuel form breach) are governed by the amount of energy that can be imparted to the WP resulting in damage. Based on the examination of impact energies associated with bounding events selected for WP design, this analysis selects two events, the transporter runaway and a rockfall within an emplacement drift, as bounding events, for which scoping consequence analyses are presented. A summary of the original frequency assessment for these bounding event scenarios is presented in Attachment VI.

The results summarized in Table 6.5-1 show that both events are Category-2. The best estimate dose calculations range from 0.3 to 2.0 rem at the 5-km site boundary, while the conservative doses all exceed 5 rem. Additional studies are planned in FY99 to reduce the likelihood of a transporter runaway and subsequent WP breach; it is expected that this will become a beyond design basis event. Furthermore, due to the large uncertainties on rockfall, probabilistic key block studies are planned to determine the maximum size rock and the likelihood that it will fall.

Table 6.5-1 – Bounding DBEs for the Subsurface

Event #	Event Description	DBE Category	TEDE Dose at 5-km (rem)	
			Conservative	Best Estimate
5	Rockfall onto Waste Package, 21-PWR	2	>5 (1)	3.0E-1
5	Rockfall onto Waste Package, 44-BWR	2	>5 (1)	3.9E-1
13A	Transporter Runaway, 21-PWR	2	>5 (1)	1.1E+0
13A	Transporter Runaway, 44-BWR	2	>5 (1)	2.0E+0

(1) For comparison purposes only - Best Estimate is used for BDBEs.

6.6 Waste Treatment Building (SU04)

The Waste Treatment Building was not analyzed for potential preclosure internal and external DBEs. It is assumed that there will not be a sufficient radiological source term available which, if released

during a DBE, could exceed the offsite dose limits for Category 1 or Category 2 DBEs. Additional design and DBE analysis is required to verify this assumption.

6.7 Summary of Bounding Internal DBEs

Table 6.7-1 below summarizes the bounding internal DBEs that were identified in Sections 6.1 through 6.7. A preliminary frequency and dose assessment of seismic initiated events for the MGR surface and subsurface facilities is presented in the Seismic DBE Analysis, Attachment VII.

Table 6.7-1 – Summary of Bounding Internal DBEs

Internal Events	DBE Category	TEDE Dose at 5-km (rem)	
		Conservative	Best Estimate
Cask/Carrier Transport & Handling (SU16), (SU08), (SU09)			
6.9-m 2–Block Drop of 61-BWR Cask (Attach. II - CH10), No HVAC	2	>5	1.4
6.9-m 2–Block Drop of 61-BWR Cask (Attach. II - CH11), HVAC Available	2	1.3E-2*	5.2E-4*
7.1-m 2-Block Drop of 26-PWR Cask (Attach. II - CH46), no HVAC	2	>5*	0.85*
7.1-m 2-Block Drop of 26-PWR Cask (Attach. II - CH47), HVAC Available	2	1.0E-2	3.0E-4
4.1-m Drop of 61-BWR Cask (Attach. II - CH07), no HVAC	2	>5*	0.97*
4.1-m Drop of 61-BWR Cask (Attach. II - CH08), HVAC Available	2	5.6E-1	3.8E-4
4.1-m Drop of 26-PWR Cask (Attach. II - CH43), no HVAC	2	>5*	0.58*
4.1-m Drop of 26-PWR Cask (Attach. II - CH44), HVAC Available	2	5.9E-1	2.2E-4
Canister Transfer System (SU11)			
28.2-foot HLWC vertical drop from 2-block crane position to floor (Attach. III – CTS006), HVAC Available	2	1.1E-2	3.6E-4
20.6-foot MCO vertical drop from normal lift height to floor (Attach. III – CTS-106), HVAC Available	2	4.7E-3	TBD
Assembly Transfer System (SU10)			
4-PWR basket drop onto another 4-PWR basket (Attach. IV – ATS001, ATS003), HVAC Available	1	4.9E-3	7.4E-5
8-BWR basket drop onto another 8-BWR basket (Attach. IV – ATS005, ATS007)	2	3.5E-3	1.5E-4
DC Handling System (SU13)			
6-m vertical drop from DC bridge crane (Attach. V – DC01), HVAC Available	2	7.2E-3	6.1E-4
2.5-m horizontal drop from horizontal lift system (Attach. V – DC05), HVAC Available	2	4.5E-3	5.4E-4
Waste Emplacement (SS17) and Subsurface Facility (SS01) Systems			
Rockfall onto 44-BWR Waste Package (Attach. VI – Event #5), No HVAC	2	>5	3.9E-1
Transporter Runaway with 44-BWR Waste Package (Attach. VI – Event #13A), No HVAC	2	>5	2.0E+0

* Current design concept does not have mitigation (i.e., HEPA filter). These results are shown for information only.
** MCO contains N-Reactor fuel.
NE = Not Evaluated

7. References

7.1 EPA-520/1-88-020, Federal Guidance Report #11, *Limiting Values of Radionuclide Intake and Air Concentration and Dose Conversion Factors for Inhalation, Submersion, and Ingestion*, Oak Ridge National Laboratory, 1988. Catalog # 4892.

7.2 Wilmot, E.L., SAND80-2124, *Transportation Accident Scenarios for Commercial Spent Fuel*, Sandia National Laboratories, 1981. Catalog #s 3984, 237550 & 237551.

7.3 MacDougall, H.R., et. al., SAND84-2641, *Site Characterization Plan Conceptual Design Report*, Volume 4, Sandia National Laboratories, 1987. Catalog #s 831 & ~~206480.~~ 206487. JAK 11/12/98

7.4 Mecham, W.J., L.J. Jardine, R.H. Pelto, G.T. Reedy, and M.J. Steindler, *Interim Report of Brittle Fracture Impact Studies: Development of Methodology*, ANL-81-27, Argonne National Laboratory, October 1981. NNA.19890411.0034.

7.5 Jardine, L.J., W.J. Mecham, G.T. Reedy, and M.J. Steindler, *Final Report of Experimental Laboratory-Scale Brittle Fracture Studies of Glasses and Ceramics*, ANL-82-39, Argonne National Laboratory, October 1982. NNA.19890411.0033.

7.6 Regulatory Guide 1.145, *Atmospheric Dispersion Models for Potential Accident Consequence Assessments at Nuclear Power Plants*, Revision 1, U.S. Nuclear Regulatory Commission, November 1982. Catalog # 222640.

7.7 *Controlled Design Assumptions Document*, B00000000-01717-4600-00032 Rev 05, CRWMS M&O, July 31, 1998. MOL.19980804.0481.

7.8 *Preliminary List of Waste Package Designs for VA*, BBA000000-01717-3300-00008 Rev 01, CRWMS M&O, February 25, 1998. MOL.19980311.0284.

7.9 *Uncanistered Spent Nuclear Fuel Disposal Container System Description Document*, BBA000000-01717-1705-00004 Rev 00, CRWMS M&O, 4/2/98. MOL.19980515.0167 Vol I & MOL.19980518.0155 Vol II.

7.10 *Preliminary MGDS Hazards Analysis*, B00000000-01717-0200-00130, Rev 00, CRWMS M&O, 9/4/96. MOL.19961230.0013.

7.11 Massari, J.R., *Source Terms for Design Basis Event Analyses*, BBA000000-01717-0200-00019 Rev 00, 10/2/96. MOL.19970203.0121.

JAK 11/12/98 7.12 Light Water Characteristics Database, ~~LWR~~ Radiological ~~PC Database~~ module, Version 1.1, CSCI A00000000-02268-1200-20002, July 1993, CRWMS M&O. HQF.19940427.0022.

7.13 RESERVED

JAK 11/12/98 7.14 ~~*Disposal Container Handling System Design Basis Event Analysis*, BCBD00000-01717-0200-00018 Rev 00, CRWMS M&O, Draft.~~ RESERVED.

7.15 ANSI/IEEE Std 500, "Guide to the Collection and Presentation of Electrical, Electronic, Sensing Component, and Mechanical Equipment Reliability Data for Nuclear-Power Generating Stations," 1984. NNA.19900403.0396.

7.16 RESERVED

7.17 *Surface Nuclear Facilities HVAC Analysis*, BCBD00000-01717-0200-00013 Rev 00, CRWMS M&O, 9/29/97. MOL.19980112.0189.

7.18 *Canister Transfer System Design Analysis*, BCBD00000-01717-0200-00008, Rev. 00, CRWMS M&O, September 30, 1997. MOL.19980108.0054.

7.19 *DWPF Canister Procurement, Control, Drop Test, and Closure (U)*, WSRC-IM-91-116-8, Revision 1, Marra, S.L., Harbour, J.R., and Plodinec, M.J., Westinghouse Savannah River Company, Savannah River Site, Aiken, SC 29808, November 1995. Catalog #232758.

7.20 *Handbook of Human Reliability Analysis with Emphasis on Nuclear Power Plant Applications*, NUREG/CR-1278, Swain, A.D. and Guttmann, H.E., Sandia National Laboratories, Albuquerque, NM 87185, August 1983. Catalog # ~~234345~~. 234354. JAK 11/12/98

7.21 *Environmental Assessment Related to the Construction and Operation of the Rancho SECO Independent Spent Fuel Storage Installation*, U.S. NRC Office of Nuclear Material Safety and Safeguards, Docket No. 72-11, ~~August 1994~~. October 1993. HQO.19931021.0002. JAK 11/12/98

7.22 RESERVED

7.23 *Waste Package Design Basis Events*, BBA000000-01717-0200-00037, REV 00, CRWMS M&O, April 18, 1997. MOL.19971006.0075.

7.24 *Design Criteria for an Independent Spent Fuel Storage Installation (Water Pool Type)*, ANSI/ANS 57.7-1988, American Nuclear Society, La Grange Park, IL, 1988. Catalog # 238870.

7.25 *High-Level Waste Canister Design Basis Events (Preliminary Draft)*, BCBD00000-01717-0200-00015, Rev 00C, CRWMS M&O, March 27, 1998. MOL.19980515.~~0212~~. 0202. JAK 11/12/98

JAK 11/12/98

7.26 *Repository Surface Design MFD Design Drawings*, BCBD00000-01717-2700-67000 Rev 00 through BCBD00000-01717-2700-67014 Rev 00, CRWMS M&O, 5/29/97. MOL.19971067.0727, MOL.19980408.0617 through MOL.19980408.0629.

7.27 *Surface Facilities Space Program Analysis*, BCBD00000-01717-0200-00012 Rev 00, CRWMS M&O, Las Vegas, NV, September 24, 1997. MOL.19980112.0176.

7.28 ~~*Assembly Transfer System Design Analysis*, BCBD00000-01717-0200-00007 REV 00A (draft), CRWMS M&O, Las Vegas, NV, January 27, 1998.~~ RESERVED. JAK 11/12/98

7.29 *Waste Package Off-Normal and Accident Scenario Report*, BBA000000-01717-5705-00008 Rev 00, CRWMS M&O, January 23, 1996. MOL.19960724.0311.

7.30 *Preclosure Seismic Design Methodology for a Geologic Repository at Yucca Mountain*, Topical Report YMP/TR-003-NP, Revision 2, OCRWM, August 1997. MOL.19971009.0413.

7.31 RESERVED

7.32 RESERVED

7.33 *Transportation Cask Physical Envelope Study Report*, B00000000-01717-5705-00089 Rev 00, CRWMS M&O, March 6, 1998. MOL.19980330.0039.

7.34 *Waste Handling Systems Configuration Analysis*, BCBD000000-01717-0200-00001 Rev 00, CRWMS M&O, 1997. MOL.19970415.0399. JAK 11/12/98

7.35 ANS/ANSI 5.10, *Airborne Release Fractions at Non-Reactor Nuclear Facilities*, Draft 0, Rev 5, August 1997. CATALOG # 235073. JAK 11/12/98

7.36 ~~*Preclosure Radiological Safety Assessment for the Exploratory Studies Facility*, BAB000000-01717-2200-00006 Rev 00, CRWMS M&O, April 1994.~~ RESERVED. JAK 11/12/98

7.37 NUREG-1320, *Nuclear Fuel Cycle Facility Accident Analysis Handbook*, U.S. Nuclear Regulatory Commission, May 1988. CATALOG # 206914. JAK 11/12/98

7.38 *Nuclear Air Cleaning Handbook*, Design, Construction, and Testing of High-Efficiency Air Cleaning Systems for Nuclear Application, ERDA 76-21, Oak Ridge National Laboratory, ~~1978~~ 1976. CATALOG # 918 JAK 11/12/98

7.39 NUREG/CR-0722, *Fission Product Release from Highly Irradiated LWR Fuel*, Oak Ridge National Laboratory, April 1980. CATALOG # 211434. JAK 11/12/98

7.40 DOE-HDBK-3010-94, *Airborne Release Fractions/Rates and Respirable Fractions for Nonreactor Nuclear Facilities*, Volume 1, U.S. Department of Energy, December 1994. CATALOG # 2333 JAK 11/12/98

7.41 NUREG/CR-2300, *PRA Procedures Guide, A Guide to the Performance of Probabilistic Risk Assessments for Nuclear Power Plants*, Vol. 1, U.S. Nuclear Regulatory Commission, December 1982. CATALOG # 205084. JAK 11/12/98

7.42 ~~CRWMS M&O Interoffice Correspondence, LV.SEI.CRH.7/98-024, *Strategy to Mitigate Preclosure Offsite Exposure*, incl. Attachments (1)-(3), C.R. Hastings to Distribution, July 21, 1998.~~ RESERVED. JAK 11/12/98

7.43 NUREG-1536, *Standard Review Plan for Dry Cask Storage Systems*, Final Report, U.S. Nuclear Regulatory Commission, January 1997. CATALOG # 232373. JAK 11/12/98

7.44 *DBE/Scenario Analysis for Preclosure Repository Subsurface Facilities*, BCA000000-01717-0200-00017 Rev 00, CRWMS M&O, December 1997. MOL.19980218.0237. JAK 11/12/98

7.45 RESERVED.

7.46 ~~LV.EFP.WWS.07/98-002, Interoffice Correspondence, W. Schalk & D. Landwehr to K. Montague & J. Kappes, *Preliminary Draft 1000m and 5000m χ/Q value Table Interpretation*, CRWMS M&O, July 2, 1998.~~ RESERVED. JAK 11/12/98

7.47 *Report of the Task Group on Reference Man*, International Commission on Radiological Protection Publication No. 23, Adopted in October, 1974. CATALOG # 237218. JAK 11/12/98

7.48 Large MPC Subsystem Preliminary Design Report, MPC-NC-02-020, Rev. 2, Westinghouse Government and Environmental Services Company, June 25, 1996. MOV.19961028.0045. JAK 11/12/98

7.49 *Preliminary Analysis of Design Basis Events for N-Reactor Spent Nuclear Fuel*, LV.SA.ST.03/98-027, Department of Energy (DOE) Civilian Radioactive Waste Management System (CRWMS), Management and Operating Contractor (M&O), Las Vegas, NV, March 4, 1998. MOL.19980317.0086. JAK 11/12/98

7.50 *Issue 1 of the High priority Performance Parameter (HPPP) study - Surface Facility Preclosure DBE Analysis*, LV.SA.RPM.05/98-063, Department of Energy (DOE) Civilian Radioactive Waste Management System (CRWMS), Management and Operating Contractor (M&O), Las Vegas, NV, May 29, 1998. MOL.19980729.0463. JAK 11/12/98

7.51 MCO Characterization Data, CLB-06-98, C. L. Bendixson, National Spent Nuclear Fuel Program (NSNFP) to D. Stahl (CRWMS M&O), April 7, 1998. MOL.19980730.0149-.0151. JAK 11/12/98

7.52 *Multicanister Overpack Topical Report*, HNF-SD-SNF-SARR-005, Rev. 0, Department of Energy Hanford Site, DESH, Richland, WA, ~~March 25~~ MAY, 1997. MOL.19981102.0083. JAK 11/12/98

7.53 10 CFR Part 60, *Disposal of High-Level Radioactive Wastes in Geologic Repositories*, Nuclear Regulatory Commission, Federal Register: December 31, 1996, Volume 61. CATALOG # 232902. JAK 11/12/98

7.54 *RESERVED*

7.55 *Component Failure-Rate Data with Potential Applicability to a Nuclear Fuel Reprocessing Plant*, A.H. Dexter & W.C. Perkins, Westinghouse Savannah River Company, Table II, Page 13, July 1982. (pg. 10 through 38). MOL.19981102.0003. JAK 11/12/98

7.56 *Review of Proposed Dry-Storage Concepts Using Probabilistic Risk Assessment*, EPRI NP-3365, Electric Power Research Institute, February 1984. CATALOG # 103555. JAK 11/12/98

7.57 ~~*Catawba Nuclear Station Probabilistic Risk Assessment, File: CN-1535.00, Fax Transmittal from D. Brewer to J. Kappes, July 13, 1998.*~~ RESERVED. JAK 11/12/98

7.58 *Monitored* Geologic Repository Draft Disposability Interface Specification, B00000000-01717-4600-00108 Rev 01B, CRWMS M&O, Las Vegas, NV, July 1998. MOL.19981102.0001. JAK 11/12/98

7.59 10 CFR Part 71, *Packaging and Transportation of Radioactive Material*, Nuclear Regulatory Commission. CATALOG # 238422. JAK 11/12/98

JAK 11/12/98 7.60 ~~Letter from Chris Kouts to the Nuclear Regulatory Commission containing DOE's RAI #12-8 to Docket # 72-21 (TAC#L22327), May 1, 1997.~~ Correspondence to NRC dated May 1, 1997 with enclosure of Revision 0 of Department of Energy's (DOE) Centralized Interim Storage Facility (CISF) Topical Safety Analysis Report (TSAR). (pg. 116 through 127). MOL.19981102.0002

JAK 11/12/98 7.61 EPRI NP-2301, *Loss of Off-Site Power at Nuclear Power Plants: Data and Analysis*, Interim Report, March 1982. (Enclosure of Table 3-1, LOSP Event Frequency Estimates). MOL.19981102.0002

7.62 NUREG-0800, *Standard Review Plan for the Review of Safety Analysis Reports for Nuclear Power Plants*, LWR Edition, U.S. Nuclear Regulatory Commission, June 1987. CATALOG # 203894. JAK 11/12/98

7.63 EPA 402-R-93-081, Federal Guidance Report No. 12, *External Exposure To Radionuclides in Air, Water, and Soil*, U.S. Environmental Protection Agency, September 1993. CATALOG # 225472. JAK 11/12/98

7.64 *Waste Quantity, Mix, and Throughput Study Report*, B00000000-01717-5705-00059 Rev 01, OCRWM M&O, August 15, 1997. MOL.19971210.0628. JAK 11/12/98

7.65 *K-Basins Particulate Water Content, Behavior, and Impact*, HNF-1523, Rev. 0, Duke Engineering & Services Hanford, Inc., Richland, WA, November 1997. (Enclosure of Table 2-1: MC Pressure Estimates, atm). MOL.19981102.0005. JAK 11/12/98

7.66 *Frequency of SNF Misload for Uncanistered Fuel Waste Package*, BBA000000-01717-0210-00011 Rev 00, CRWMS M&O, Las Vegas, NV, July 1998. MOL.19980806.0604. JAK 11/12/98

7.67 *Carrier Preparation Building Material Handling System Description Document (SU08)*, BCB000000-01717-1705-00001 Rev. 00, September 1998. Pre-Assigned # MOL.19981029.0144. JAK 11/12/98

JAK 11/12/98 7.68 *Carrier/Cask Handling System Description Document (SU09)*, ~~Draft, August 1997~~. SEPTEMBER 1998. BCB000000-01717-1705-00025 Rev 00. Pre-Assigned # MOL.19981027.0018.

7.69 *Assembly Transfer System Description Document (SU10)*, BCB000000-01717-1705-00023 Rev. 00, July 1998. Pre-Assigned # MOL.19981029.0153. JAK 11/12/98

7.70 *Canister Transfer System Description Document (SU11)*, BCB000000-01717-1705-00024 Rev. 00, April 1998. MOL.19980505.0087. JAK 11/12/98

7.71 *Disposal Container Handling System Description Document (SU13)*, BCB000000-01717-1705-00026 Rev 00, CRWMS M&O, Las Vegas, NV, September 1998. Pre-Assigned # MOL.19980910.067 JAK 11/12/98

.K 11/12/98 7.72 ~~*Carrier/Cask Transport System Description Document (SU16), Draft, January 1997.*~~ RESERVED.

7.73 *Subsurface Facility System Description Document (SS01)*, BCA000000-01717-1705-00014 Rev. 00, July 1998. MOL.19980826.0161. JAK 11/12/98

7.74 *Waste Emplacement System Description Document (SS17)*, BCA000000-01717-1705-00017 Rev. 00, April 1998. MOL.19980519.0234. JAK 11/12/98

JAK 11/12/98 7.75 *Waste Treatment Building System Description Document (SU04)*, ~~Draft, January 1997.~~ SEPTEMBER 1998. BCB000000-01717-1705-00014 Rev 00. MOL.19981030.0192.

8. Attachments

ATTACHMENT	TITLE
I	Release Fraction and PULF Data
II	Carrier/Cask Transport and Handling Systems Event Trees and Supporting Documentation
III	Canister Transfer System Event Trees and Supporting Documentation
IV	Assembly Transfer System Event Trees and Supporting Documentation
V	Disposal Container Handling System Event Trees and Supporting Documentation
VI	Waste Emplacement System and Subsurface Facility Systems Calculations and Supporting Documentation
VII	Seismic DBE Analysis
VIII	HVAC Availability
IX	Dose Calculation Data
X	Crane Data from ~~the U.S. Navy~~ Newport News Shipbuilding JAK 11/12/98
XI	Site-Specific Yucca Mountain χ/Q Values

Attachment I - Release Fractions and PULF Data

1. Purpose

The purpose of this attachment is to summarize the results of the literature search to determine applicable release fractions and PULF fractions for radiological dose assessment calculations.

2. Definitions

Gap Release Fraction – the fraction of airborne respirable size (<10μm) particulates that are present in the fuel-cladding gap of a spent fuel rod as a result of normal operations and handling at the reactor. The gap fraction in each fuel rod is available for release upon breach of the fuel rod cladding.

Airborne Release Fraction – the fraction of affected material that can be suspended in air and become available for transport.

PULF Fraction – the fraction of airborne, respirable size (<10μm) particulates that are generated from the fuel matrix as the result of an energetic impact event that ruptures the fuel rods and pulverizes the fuel. The PULF fraction is added to the particulate gap release fraction for energetic DBEs such as drops and slapdowns. The equation below estimates the respirable particulate fractions generated in an event, based on the equivalent potential energy density of a material with density (d) at a specific height (h):

$$PULF = (A)(d)(g)(h)(c)(EPF)$$

A = correlation coefficient = $2x10^{-4}$ (cm^3/J)
d = UO_2 density = 10 g/cm^3
g = gravitational acceleration = 980.7 cm/s^2
h = height, cm
c = conversion factor = 10^{-7} J/Erg
EPF = energy partition factor; fraction of the total energy that is imparted to the fuel matrix (1.0 for DHLW glass and 0.2 for SNF assemblies) [unitless]

Respirable Fraction (RF) – the fraction of airborne material present in particulate form that could be transported through the air, inhaled, and be deposited in the deep lung. For particulates, RF is equal to the sum of the gap release fraction and the PULF fraction.

3. Comparison of PULF & Release Fractions from Historical Literature

Where appropriate, the following scenario was assumed to compare the results:

- Standard 40' (12.2 meter) Drop, equivalent to an energy density of 1.2 J/cm^3 (1.2E7 $ergs/cm^3$)
- Burst Rupture of Fuel
- Compare respirable fraction (RF) of <u>particulates</u>

3.1 MacDougal (Ref. 7.3)

PULF=(2E-4)(d)(g)(h)(EPF)(1E-7)
d = 10 g/cm^3
g=981cm/s^2
h=1219 cm

EPF = 0.2 for SNF	PULF (SNF) = 4.8E-5
EPF = 1.0 for DHLW	PULF (DHLW) = 2.4E-4

3.2 ANSI 5.10 – Airborne Release Fractions at Non-Reactor Nuclear Facilities (Ref. 7.35)

RF (SNF) = 7E-5*
RF (DHLW) = 2.4E-4
* Bounding for energy density between 10-100 J/cm^3 (1E-6-1E-4 Ergs/cm^3)

3.3 Tony Smith - Preclosure Rad. Safety Assessment for ESF (Ref. 7.36)

RF (SNF) = 1E-4
RF (DHLW) = N/A
* Based on 0.3% strain on container

3.4 Mishima, NUREG-1320, Nuclear Fuel Cycle Facility Accident Analysis Handbook (Ref. 7.37)

RF (SNF) = 1.2E-4*
RF (DHLW) = 3.0E-4
* Extrapolated from curve in Fig. 4.11 with 0.5 factor applied - consistent with MacDougall curves

3.5 DOE-HDBK-3010 (Ref. 7.40)

RF (SNF) = 2.4E-4*
RF (DHLW) = 2.4E-4
* Based on MacDougall, without EPF

3.6 PRA Procedures Guide (Ref. 7.41)

RF (SNF) = 6E-6*
* ARF=2E-4, Respirable Fraction = .03

3.7 Lorenz, Fission Product Release from Highly Irradiated LWR Fuel (Ref. 7.39)

RF (SNF) = 2E-5 Burst Rupture

3.8 Wilmot, SAND80-2124 (Ref. 7.2)

RF (Phase I) = 2E-6* Burst Rupture*
RF (Phase 2) = 2E-5* Burst Rupture + Oxidation

* Release fractions from Lorenz (Ref. 7.39) reduced by a factor of 10 to account for the mass ratio of a typical spent fuel rod compared with the 0.3m section used in the Lorenz experiments.

4. Summary of Release Fractions from Literature (see Figure I-1 on next page)

Author	SNF	HLW	Ref.
MacDougall	4.85E-05	2.40E-04	7.3
ANSI 5.10	7.00E-05	2.40E-04	7.35
Tony Smith	1.00E-04		7.36
NUREG-1320	1.20E-04	3.00E-04	7.37
DOE-HDBK-3010	2.40E-04	2.40E-04	7.40
PRA Procedures Guide	6.00E-06		7.41
Wilmot	2.00E-06		7.2
Lorenz	2.00E-05		7.39

5. Recommendation:

1) Total RF = Gap Release + PULF

2) Use gap release fractions from NUREG-1536
   - H-3 = .30
   - Kr-85 = .30
   - I-129 = .10
   - Cs-134,137 = 2.3E-5
   - Sr-90 = 2.3E-5
   - Ru-106 = 1.5E-5
   - Co-60 = .15

3) For particulate gap fraction, use release fraction from Wilmot – 2.0E-6

4) Use PULF fraction from MacDougall for energetic events
   - Particulates = 1.96E-7 x EPF x h
   - h = drop height (cm)
   - EPF = 0.2 for SNF
   - EPF = 1.0 for DHLW

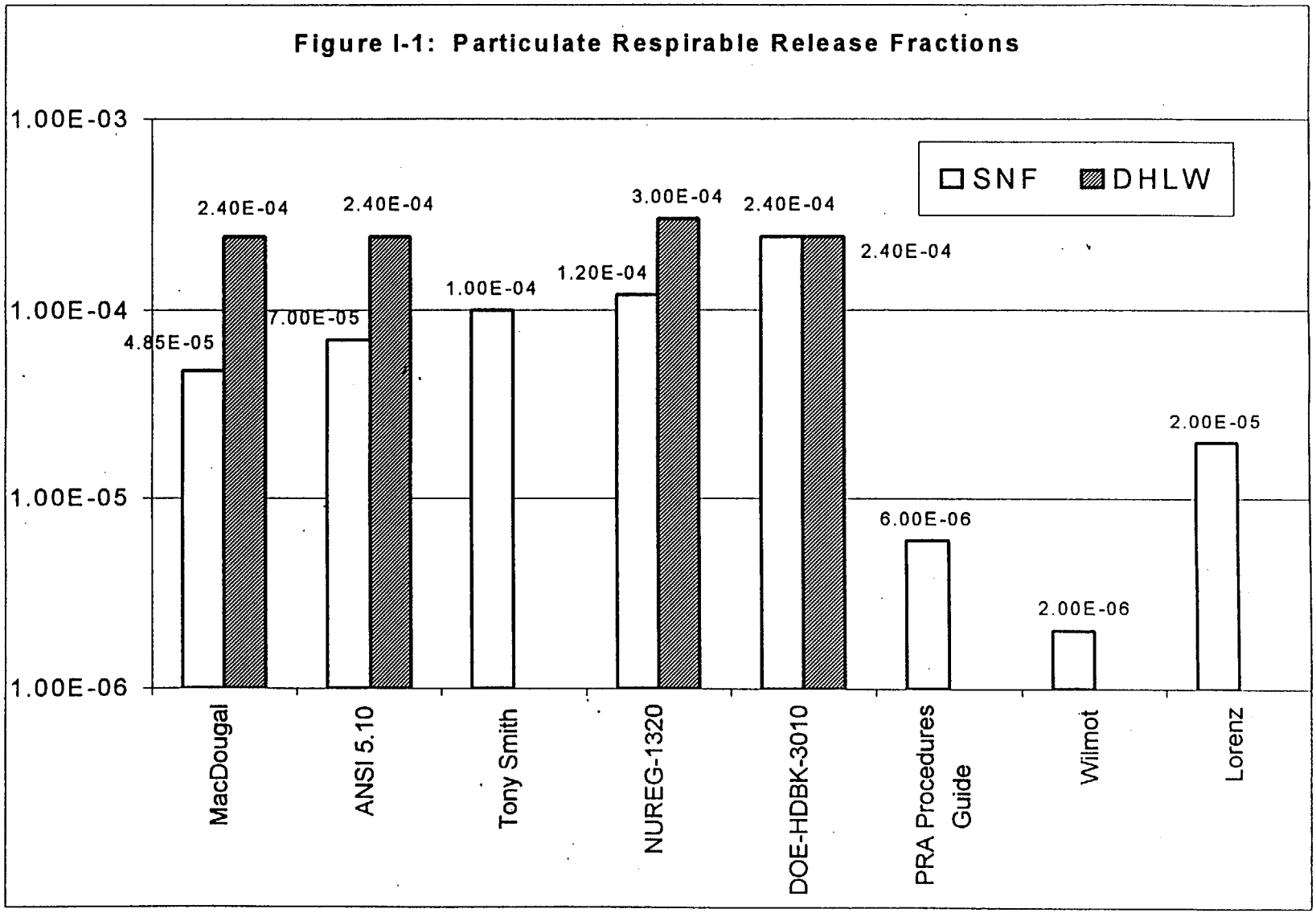
Figure I-1: Particulate Respirable Release Fractions
1.00E-03
1.00E-04
1.00E-05
1.00E-06
SNF
DHLW
2.40E-04
4.85E-05
2.40E-04
7.00E-05
1.00E-04
3.00E-04
1.20E-04
2.40E-04
2.40E-04
6.00E-06
2.00E-06
2.00E-05
MacDougal
ANSI 5.10
Tony Smith
NUREG-1320
DOE-HDBK-3010
PRA Procedures Guide
Wilmot
Lorenz

Attachment II - Carrier/Cask Transport (SU16), CPB Material Handling (SU08), and Cask/Canister Handling (SU09) System Event Trees and Supporting Documentation

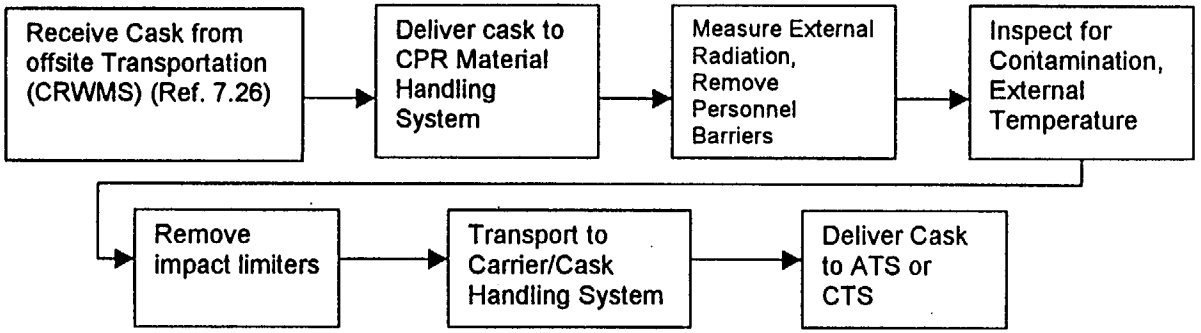

Table II-1: Summary of Events Analyzed

Event #	DBE Description	Location	Source Term	Event Frequency (per year)[d]	Cat.	5-km Best Estimate TEDE Dose (rem)	5-km Conservative TEDE Dose (rem)
CH01	Maximum annual cask drop (year 2016)	Carrier Bay	Blended[c]	7.4E-4 w/o hvac	2	TBD	TBD
CH02	Maximum annual cask drop (year 2016)	Carrier Bay	Blended	7.4E-4 w hvac[a]	2	TBD	TBD
CH03	Maximum annual cask drop (year 2016)	Carrier Bay	Blended	3.6E-7 w/o hvac	BDBE	TBD	TBD
CH04	Maximum annual cask drop (year 2016)	Carrier Bay	Blended	2.3E-4 w/o hvac	2	TBD	TBD
CH05	Maximum annual cask drop (year 2016)	Carrier Bay	Blended	2.3E-4 w hvac	2	TBD	TBD
CH06	Maximum annual cask drop (year 2016)	Carrier Bay	Blended	1.1E-7 w/o hvac	BDBE	TBD	TBD
CH07	4.1-m vertical drop of BWR cask	Carrier Bay	61 BWR assem.	1.4E-3 w/o hvac	2	9.7E-1	>5
CH08	4.1-m vertical drop of BWR cask	Carrier Bay	61 BWR assem.	1.4E-3 w hvac	2	3.8E-4	5.6E-1
CH09	4.1-m vertical drop of BWR cask	Carrier Bay	61 BWR assem.	6.8E-7 w/o hvac	BDBE	9.7E-1	>5
CH10	6.9-m vertical drop of BWR cask (2 Block)	Carrier Bay	61 BWR assem.	4.5E-4 w/o hvac	2	1.4E+0	>5
CH11	6.9-m vertical drop of BWR cask (2 Block)	Carrier Bay	61 BWR assem.	4.5E-4 w hvac	2	5.2E-4	1.3E-2
CH12	6.9-m vertical drop of BWR cask (2 Block)	Carrier Bay	61 BWR assem.	2.1E-7 w/o hvac	BDBE	1.4E+0	>5
CH13	4.1-m vertical drop of BWR cask	Carrier Bay	44 BWR assem.	6.3E-4 w/o hvac	2	7.0E-1	>5
CH14	4.1-m vertical drop of BWR cask	Carrier Bay	44 BWR assem.	6.3E-4 w hvac	2	2.7E-4	4.1E-1

Table II-1: Summary of Events Analyzed

Event #	DBE Description	Location	Source Term	Event Frequency (per year)[d]	Cat.	5-km Best Estimate TEDE Dose (rem)	5-km Conservative TEDE Dose (rem)
CH15	4.1-m vertical drop of BWR cask	Carrier Bay	44 BWR assem.	3.0E-7 w/o hvac	BDBE	7.0E-1	>5
CH16	7.1-m vertical drop of BWR cask (2 Block)	Carrier Bay	44 BWR assem.	2.0E-4 w/o hvac	2	1.1E+0	>5
CH17	7.1-m vertical drop of BWR cask (2 Block)	Carrier Bay	44 BWR assem.	2.0E-4 w hvac	2	3.8E-4	9.2E-3
CH18	7.1-m vertical drop of BWR cask (2 Block)	Carrier Bay	44 BWR assem.	9.5E-8 w/o hvac	BDBE	1.1E+0	>5
CH19	4.1-m vertical drop of BWR cask	Carrier Bay	24 BWR assem.	3.0E-4 w/o hvac	2	3.8E-1	>5
CH20	4.1-m vertical drop of BWR cask	Carrier Bay	24 BWR assem.	3.0E-4 w hvac	2	1.5E-4	2.2E-1
CH21	4.1-m vertical drop of BWR cask	Carrier Bay	24 BWR assem.	1.4E-6 w/o hvac	2	3.8E-1	>5
CH22	7.1-m vertical drop of BWR cask (2 Block)	Carrier Bay	24 BWR assem.	9.4E-4 w/o hvac	2	5.8E-1	>5
CH23	7.1-m vertical drop of BWR cask (2 Block)	Carrier Bay	24 BWR assem.	9.4E-4 w hvac	2	2.1E-4	5.6E-3
CH24	7.1-m vertical drop of BWR cask (2 Block)	Carrier Bay	24 BWR assem.	4.5E-7 w/o hvac	BDBE	5.8E-1	>5
CH25	4.1-m vertical drop of BWR cask	Carrier Bay	17 BWR assem.	9.6E-5 w/o hvac	2	2.7E-1	>5
CH26	4.1-m vertical drop of BWR cask	Carrier Bay	17 BWR assem.	9.6E-5 w hvac	2	1.1E-4	1.6E-1
CH27	4.1-m vertical drop of BWR cask	Carrier Bay	17 BWR assem.	4.6E-8 w/o hvac	BDBE	2.7E-1	>5
CH28	6.9-m vertical drop of BWR cask (2 Block)	Carrier Bay	17 BWR assem.	3.0E-5 w/o hvac	2	4.0E-1	>5
CH29	6.9-m vertical drop of BWR cask (2 Block)	Carrier Bay	17 BWR assem.	3.0E-5 w hvac	2	1.5E-4	3.5E-3
CH30	6.9-m vertical drop of BWR cask (2 Block)	Carrier Bay	17 BWR assem.	1.5E-8 w/o hvac	BDBE	4.0E-1	>5
CH31	4.1-m vertical drop of BWR cask	Carrier Bay	9 BWR assem.	3.6E-4 w/o hvac	2	1.4E-1	3.1E+0
CH32	4.1-m vertical drop of BWR cask	Carrier Bay	9 BWR assem.	3.6E-4 w hvac	2	5.6E-5	8.3E-2
CH33	4.1-m vertical drop of BWR cask	Carrier Bay	9 BWR assem.	1.7E-7 w/o hvac	BDBE	1.4E-1	3.1E+0
CH34	7.2-m vertical drop of BWR cask (2 Block)	Carrier Bay	9 BWR assem.	1.1E-4 w/o hvac	2	2.2E-1	>5
CH35	7.2-m vertical drop of BWR cask (2 Block)	Carrier Bay	9 BWR assem.	1.1E-4 w hvac	2	7.9E-5	1.9E-3
CH36	7.2-m vertical drop of BWR cask (2 Block)	Carrier Bay	9 BWR assem.	5.5E-8 w/o hvac	BDBE	2.2E-1	>5
CH37	4.1-m vertical drop of BWR cask	Carrier Bay	7 BWR assem.	5.1E-4 w/o hvac	2	1.1E-1	2.4E+0
CH38	4.1-m vertical drop of BWR cask	Carrier Bay	7 BWR assem.	5.1E-4 w hvac	2	4.3E-5	6.5E-2
CH39	4.1-m vertical drop of BWR cask	Carrier Bay	7 BWR assem.	2.5E-7 w/o hvac	BDBE	1.1E-1	2.4E+0
CH40	7.2-m vertical drop of BWR cask (2 Block)	Carrier Bay	7 BWR assem.	1.6E-4 w/o hvac	2	1.7E-1	4.0E+0

Table II-1: Summary of Events Analyzed

Event #	DBE Description	Location	Source Term	Event Frequency (per year)[d]	Cat.	5-km Best Estimate TEDE Dose (rem)	5-km Conservative TEDE Dose (rem)
CH41	7.2-m vertical drop of BWR cask (2 Block)	Carrier Bay	7 BWR assem.	1.6E-4 w hvac	2	6.1E-5	1.5E-3
CH42	7.2-m vertical drop of BWR cask (2 Block)	Carrier Bay	7 BWR assem.	7.7E-8 w/o hvac	BDBE	1.7E-1	4.0E+0
CH43	4.1-m vertical drop of PWR cask	Carrier Bay	26 PWR assem.	1.9E-3 w/o hvac	2	5.8E-1	>5
CH44	4.1-m vertical drop of PWR cask	Carrier Bay	26 PWR assem.	1.9E-3 w hvac	2	2.2E-4	5.9E-1
CH45	4.1-m vertical drop of PWR cask	Carrier Bay	26 PWR assem.	9.3E-7 w/o hvac	BDBE	5.8E-1	>5
CH46	7.1-m vertical drop of PWR cask (2 Block)	Carrier Bay	26 PWR assem.	6.1E-4 w/o hvac	2	8.5E-1	>5
CH47	7.1-m vertical drop of PWR cask (2 Block)	Carrier Bay	26 PWR assem.	6.1E-4 w hvac	2	3.0E-4	1.0E-2
CH48	7.1-m vertical drop of PWR cask (2 Block)	Carrier Bay	26 PWR assem.	2.4E-7 w/o hvac	BDBE	8.5E-1	>5
CH49	4.1-m vertical drop of PWR cask	Carrier Bay	24 PWR assem.	2.0E-3 w/o hvac	2	5.4E-1	>5
CH50	4.1-m vertical drop of PWR cask	Carrier Bay	24 PWR assem.	2.0E-3 w hvac	2	2.0E-4	5.5E-1
CH51	4.1-m vertical drop of PWR cask	Carrier Bay	24 PWR assem.	9.7E-7 w/o hvac	BDBE	5.4E-1	>5
CH52	6.9-m vertical drop of PWR cask (2 Block)	Carrier Bay	24 PWR assem.	6.4E-4 w/o hvac	2	7.5E-1	>5
CH53	6.9-m vertical drop of PWR cask (2 Block)	Carrier Bay	24 PWR assem.	6.4E-4 w hvac	2	2.7E-4	9.1E-3
CH54	6.9-m vertical drop of PWR cask (2 Block)	Carrier Bay	24 PWR assem.	3.1E-7 w/o hvac	BDBE	7.5E-1	>5
CH55	4.1-m vertical drop of PWR cask	Carrier Bay	12 PWR assem.	2.5E-3 w/o hvac	2	2.7E-1	>5
CH56	4.1-m vertical drop of PWR cask	Carrier Bay	12 PWR assem.	2.5E-3 w hvac	2	7.8E-4	2.7E-1
CH57	4.1-m vertical drop of PWR cask	Carrier Bay	12 PWR assem.	1.2E-6 w/o hvac	2	2.7E-1	>5
CH58	7.1-m vertical drop of PWR cask (2 Block)	Carrier Bay	12 PWR assem.	7.7E-4 w/o hvac	2	3.8E-1	>5
CH59	7.1-m vertical drop of PWR cask (2 Block)	Carrier Bay	12 PWR assem.	7.7E-4 w hvac	2	1.4E-4	4.6E-3
CH60	7.1-m vertical drop of PWR cask (2 Block)	Carrier Bay	12 PWR assem.	3.7E-7 w/o hvac	BDBE	3.8E-1	>5
CH61	4.1-m vertical drop of PWR cask	Carrier Bay	7 PWR assem.	4.6E-4 w/o hvac	2	1.6E-1	4.1E+0
CH62	4.1-m vertical drop of PWR cask	Carrier Bay	7 PWR assem.	4.6E-4 w hvac	2	5.9E-5	1.6E-1
CH63	4.1-m vertical drop of PWR cask	Carrier Bay	7 PWR assem.	2.2E-7 w/o hvac	BDBE	1.6E-1	4.1E+0
CH64	6.9-m vertical drop of PWR cask (2 Block)	Carrier Bay	7 PWR assem.	1.4E-4 w/o hvac	2	2.2E-1	>5
CH65	6.9-m vertical drop of PWR cask (2 Block)	Carrier Bay	7 PWR assem.	1.4E-4 w hvac	2	8.0E-5	2.6E-3
CH66	6.9-m vertical drop of PWR cask (2 Block)	Carrier Bay	7 PWR assem.	6.9E-8 w/o hvac	BDBE	2.2E-1	>5

Table II-1: Summary of Events Analyzed

Event #	DBE Description	Location	Source Term	Event Frequency (per year)[d]	Cat.	5-km Best Estimate TEDE Dose (rem)	5-km Conservative TEDE Dose (rem)
CH67	4.1-m vertical drop of PWR cask	Carrier Bay	4 PWR assem.	7.1E-4 w/o hvac	2	9.0E-2	2.4E+0
CH68	4.1-m vertical drop of PWR cask	Carrier Bay	4 PWR assem.	7.1E-4 w hvac	2	3.4E-5	9.1E-2
CH69	4.1-m vertical drop of PWR cask	Carrier Bay	4 PWR assem.	3.4E-7 w/o hvac	BDBE	9.0E-2	2.4E+0
CH70	7.2-m vertical drop of PWR cask (2 Block)	Carrier Bay	4 PWR assem.	2.3E-4 w/o hvac	2	1.3E-1	3.9E+0
CH71	7.2-m vertical drop of PWR cask (2 Block)	Carrier Bay	4 PWR assem.	2.3E-4 w hvac	2	4.5E-5	1.6E-3
CH72	7.2-m vertical drop of PWR cask (2 Block)	Carrier Bay	4 PWR assem.	1.1E-7 w/o hvac	BDBE	1.3E-1	3.9E+0
CH73	4.1-m vertical drop of PWR cask	Carrier Bay	3 PWR assem.	9.0E-4 w/o hvac	2	6.7E-2	1.8E+0
CH74	4.1-m vertical drop of PWR cask	Carrier Bay	3 PWR assem.	9.0E-4 w hvac	2	2.5E-5	6.8E-2
CH75	4.1-m vertical drop of PWR cask	Carrier Bay	3 PWR assem.	4.3E-7 w/o hvac	BDBE	6.7E-2	1.8E+0
CH76	6.9-m vertical drop of PWR cask (2 Block)	Carrier Bay	3 PWR assem.	2.8E-4 w/o hvac	2	9.8E-2	3.0E+0
CH77	6.9-m vertical drop of PWR cask (2 Block)	Carrier Bay	3 PWR assem.	2.8E-4 w hvac	2	3.5E-5	1.2E-3
CH78	6.9-m vertical drop of PWR cask (2 Block)	Carrier Bay	3 PWR assem.	1.4E-7 w/o hvac	BDBE	9.8E-2	3.0E+0
CH79	Cask tip over/Slapdown (5.3-m)[b]	Carrier Bay	61 BWR/26 PWR	1E-3	2	26.5/19.2	
CH80	Drop from Carrier Cradle[b] 1.5-m for Rail Carrier 1.2-m for Truck Carrier	Site during movement/ Carrier Bay	61 BWR/26 PWR 9 BWR/4 PWR	1E-3	2	9.6/7.1 1.2/0.95	
CH81	Fire/explosion due to ignition of the diesel fuel used by site primary mover					TBD	TBD
CH82	Tornado missile impacts cask while parked outside or during transport					TBD	TBD
CH83	Aircraft crash into parked shipping cask					TBD	TBD
CH84	Cask Drop due to Loss of Offsite Power Event	Carrier bay	61 PWR assem.	6.0E-5	2	1.4E+0	>5

[a] No HVAC confinement exists for these systems in the current VA design.
[b] Assumed to be initiated by a Frequency-Category-1 (frequency of 1E-3) seismic event.
[c] Year 2016 Key 001 Controlled Design Assumption.
[d] Event trees provided for bounding events only.
TBD – To Be Determined.

Table II-1 summarizes the events considered for the Carrier/Cask Transport and Handling Systems. The dose shown for the events were calculated using the methodology documented in section 2 of the main text. The drop heights for the various casks used in the PULF calculations are provided in Table II-2. The drop frequency from assumption 3.2.3 was used along with the maximum annual cask throughput from Key 01 of Reference 7.7 to calculate the initiating frequency for the various drop events. Table II-3 contains the throughput values used.

Table II-2: Transportation Cask Drop Heights

Cask[a]	Cask Height	Drop height (in)	Drop height (cm)	Drop height (ft)
5) Sierra Nuclear 61/24	210	273	693.4	22.75
10) WE Large 44/21	205	278	706.1	23.17
6) NAC-STC 26 PWR	193	290	736.6	24.17
9) WE Small 24/12	204	279	708.7	23.25
1) GA-9 9/4	198	285	723.9	23.75
2) TN-9 7 BWR	201	282	716.3	23.50
4) TN-8-TN 8L 3PWR	192	291	739.1	24.25
8) IF-300 SAR 71 18/7	210	273	693.4	22.75

[a]Number corresponds to Cask number in Table 1, Transportation Cask Physical Parameter Data, of the Transportation Cask Physical Envelope Study.

Drop height = High Hook Height + Two Block Margin - Yoke Height + Trunnion Height – Cask Height

=552 in + 24 in –105 in +12 in – Cask Height

Table II-3: Maximum Annual Cask Throughput

Cask Type	Maximum Annual Throughput	CDA Table[a]
BWR-7	48	3.1
BWR-9	34	3.1
BWR-17	9	3.2
BWR-24	280	3.3 (includes large can 22-BWR)
BWR-44	59	3.3
BWR-61	133	3.2 & 3.3
PWR-3	84	3.1
PWR-4	67	3.1
PWR-7	43	3.2
PWR-12	230	3.2 & 3.3
PWR-24	189	3.3 (includes med. Can 21-PWR)
PWR-26	182	3.2

[a] Reference 7.7

The following table, Table 5.1.1-2 from DOE's response to action items RAI #12-8, was taken from reference 7.60. It was used as the basis for the drop height of a cask without impact limiters.

Drops

Cask systems without impact limiters shall be designed and certified to withstand a drop event without any significant impact to their important-to-safety design functions. Maximum permissible drop heights are specified in Table 5.1.1-2 for specific systems currently included in the CISF design.

Table 5.1.1-2 Loaded Cask System Maximum Drop Heights

Lift/Drop Heights (distance above grade or floor)	Cask System Type*								
	Holtec HI-STAR or NAC STC	VECTRA NUHOMS® MP187 System		Westinghouse MPC System		Sierra TranStor™			
Operation	TSC	SC	TC	SC	TC	Can	SC	TC	XC
Maximum Vertical Lift/Drop	80"	N/A	80"	30"	108"	209.25"	12"	80"	218.25"
Maximum Horizontal Lift/Drop	N/A	N/A	60"	70"	108"	N/A	N/A	N/A	N/A

*Abbreviations:

Can - Canister
TSC - Transportable Storage Cask
SC - Storage Cask
TC - Transportation Cask
XC - Transfer Cask
N/A - Not Applicable

BWR-61 CASK DROP	DROP HEIGHT	HEPA FILTRATION	Sequence Name	DBE Cat.	Frequency	TEDE Dose Best Est. (rem)	TEDE Dose Conservative (rem)
Sierra Nuclear TranStor	Normal Lift Height -13' 6" (4.1m), Two-block 6.9m	HEPA Filtration not in current design for system					
	NORMAL	UNAVAILABLE	CH07	2	1.41E-03	9.7E-1	>5
CASK DROP	7.60E-01						
1.86E-03	2 BLOCK	UNAVAILABLE	CH10	2	4.46E-04	1.4E+0	>5
	2.40E-01						

Cask Drop Frequencies based on current VA Design (NoConfinement	C:\CAFTA-W\BWR61B.ETA	9/16/98	Page 1

BWR-01 CASK DROP	DROP HEIGHT	HEPA FILTRATION	Sequence Name	DBE Cat.	Frequency	TEDE Dose Best Est. (rem)	TEDE Dose Conservative (rem)
Sierra Nuclear TranStor	Normal Lift Height -13' 6" (4.1m), Two-block 6.9m						
CASK DROP 1.86E-03	NORMAL 7.60E-01	AVAILABLE 9.99E-01	CH08	2	1.41E-03	3.8E-4	5.6e-1
		UNAVAILABLE 4.80E-04	CH09	BDBE	6.79E-07	9.7E-1	>5
	2 BLOCK 2.40E-01	AVAILABLE 9.99E-01	CH11	2	4.46E-04	5.2E-4	1.3E-2
		UNAVAILABLE 4.80E-04	CH12	BDBE	2.14E-07	1.4E+0	>5

Cask Drop Frequencies based on Preclosure Safety Strategy (Conf | C:\CAFTA-W\BWR61A.ETA | 9/15/98 | Page 1

PWR-26 CASK DROP	DROP HEIGHT	HEPA FILTRATION	Sequence Name	DBE CAT	Frequency	TEDE Dose Best Est. (rem)	TEDE Dose Conservativ (rem)
NAC-STC	Normal Lift Height -13' 6" (4.1m), Two-block 7.2m	HEPA Filtration not in current design for system					
	NORMAL	UNAVAILABLE					
CASK DROP	7.60E-01		CH43	2	1.94E-03	5.8E-1	>5
2.55E-03	2 BLOCK	UNAVAILABLE					
	2.40E-01		CH46	2	6.12E-04	8.5E-1	>5

Cask Drop Frequencies based on current VA Design (No Confinemen	C:\CAFTA-W\PWR26B.ETA	9/16/98	Page 1

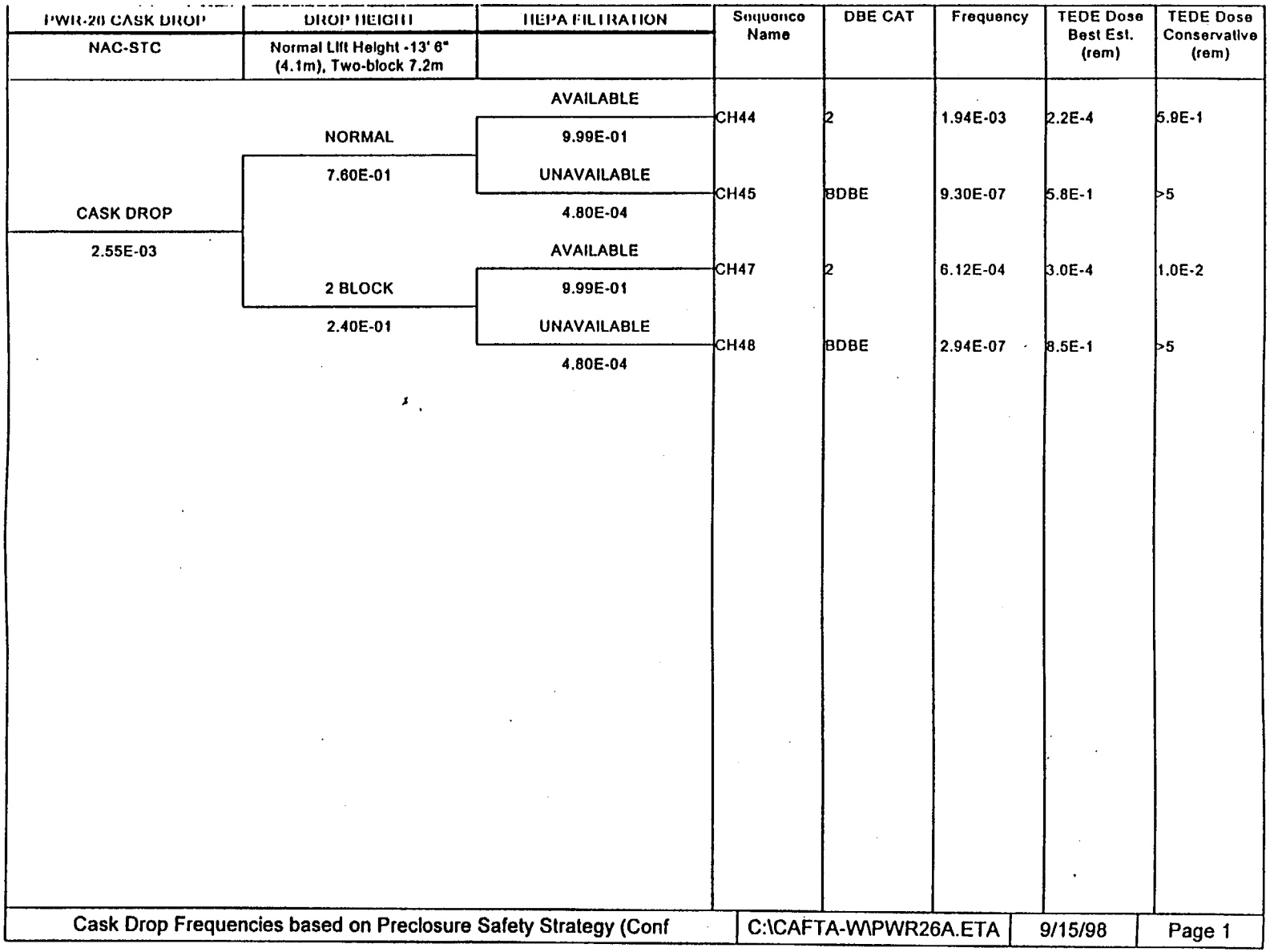
PWR-26 CASK DROP
NAC-STC
DROP HEIGHT
Normal Lift Height -13' 6" (4.1m), Two-block 7.2m
HEPA FILTRATION
Sequence Name
DBE CAT
Frequency
TEDE Dose Best Est. (rem)
TEDE Dose Conservative (rem)
CASK DROP
2.55E-03
NORMAL
7.60E-01
2 BLOCK
2.40E-01
AVAILABLE
9.99E-01
UNAVAILABLE
4.80E-04
AVAILABLE
9.99E-01
UNAVAILABLE
4.80E-04
CH44
2
1.94E-03
2.2E-4
5.9E-1
CH45
BDBE
9.30E-07
5.8E-1
>5
CH47
2
6.12E-04
3.0E-4
1.0E-2
CH48
BDBE
2.94E-07
8.5E-1
>5
Cask Drop Frequencies based on Preclosure Safety Strategy (Conf
C:\CAFTA-W\PWR26A.ETA
9/15/98
Page 1

Attachment III - Canister Transfer System (SU11) Event Trees and Supporting Documentation

Table III-1 summarizes the events considered for the Canister Transfer System. The doses shown for the events were calculated using the methodology documented in Section 2.0 of this document and in Attachment IX.

Vertical Drop of Disposable Canister onto Another Disposable Canister from Below Design Basis (CTS-001 through CTS-005)

Description: This event is due to the CTS crane dropping a disposable canister during a normal operating lift (i.e., less than 22 feet) onto another disposable canister. The event sequences include probabilities for breach of one defective canister (e.g., canister has defective welds), two defective canisters, or no breach. Events CTS-004 and CTS-005 are applicable only to defense high-level waste canisters (HLWCs). Waste packages will be loaded with only one commercial disposable canister (i.e., large canister) and only one commercial disposable canister will be inside the hot cell of the CTS at any one time. Therefore, a drop of one commercial disposable canister onto another is not applicable to events CTS-004 and CTS-005.

Input:

- 1.4E-2 is the frequency per year of a drop event based on a crane heavy lift drop frequency of 1.4E-5 per lift (see Attachment X), multiplied by 2 lifts per canister (Reference 7.34), multiplied by 500 canisters received during a peak year (Reference 7.7). See Assumption 3.3.3.
- 3.0E-3 is the probability of a drop from a height greater than the design basis of the canister. This probability assumes the hard stop that prevents a canister from being raised above the normal operating height was omitted as a result of human error after maintenance of the crane (Table 20-7 of Reference 7.20). See Assumption 3.3.7.
- 1.06E-3 is the probability of a defective canister. This probability assumes a defective weld and is taken from the Reference 7.23 analysis of welding defects of waste packages. See Assumption 3.3.8.
- 4.8E-4 is the unavailability for a single train HVAC system (see Attachment VIII). This probability is used in all of the CTS event trees. See Assumption 3.1.11.

Drop height used for PULF calculation: 22 feet (670.6 cm) (Reference 7.18) (Assumption 3.3.4)

Vertical Drop of Disposable Canister from Above Design Basis to the Floor of the CTS (CTS-006 and CTS-007)

Description: This event is due to the CTS crane dropping a disposable canister that has been lifted above its design basis drop height (i.e., greater than 23 feet) onto another disposable canister. All drops from above the design basis of a canister are assumed to result in a canister breach. The drop results in a breach of two canisters. Canisters containing commercial BWR spent fuel assemblies (bounding commercial SNF) and DHLW were considered for the radiological consequences of this event. Waste packages will be loaded with only one commercial disposable canister and only one commercial disposable canister will be inside the hot cell of the CTS at any one time. Therefore, a drop of one commercial disposable canister onto another is not feasible. Events CTS-006 and CTS-007 consider the drop of one canister to the floor of the CTS.

Input:

- 1.4E-2 is the frequency per year of a drop event based on a crane heavy lift drop frequency of 1.4E-5 per lift (see Attachment X), multiplied by 2 lifts per canister (Reference 7.34), multiplied by 500 canisters received during a peak year (Reference 7.7). This is a conservative probability for commercial disposable canisters. See Assumption 3.3.3.

- 3.0E-3 is the probability of a drop from a height greater than the design basis of the canister. This probability assumes the hard stop that prevents a canister from being raised above the normal operating height was omitted as a result of human error after maintenance of the crane (Table 20-7 of Reference 7.20). See Assumption 3.3.7.

- 1.0E+0 is the assumed probability of a canister breach during a drop from greater than the design basis height of the canister. See Assumption 3.3.6.

- 4.8E-4 is the unavailability for a single train HVAC system (see Attachment VIII). This probability is used in all of the CTS event trees. See Assumption 3.1.11.

Drop height used for PULF calculation: (Reference 7.18) (Assumption 3.3.4)
⇒ 28'2" (858.5 cm) for canister of 44 BWR DBF assemblies for above design basis
⇒ 23'3" (708.7 cm) for canister of 44 BWR DBF assemblies for normal operating height
⇒ 35' (1066.8 cm) for canister of vitrified DHLW for above design basis

Loss of Power and 22-Foot Drop of HLWC (CTS-009 through CTS-011)

Description: This event is due to the CTS crane dropping a canister during a normal operating lift, assuming a loss-of-offsite power (LOSP) occurs. The canister drop is due to the failure of the brakes to engage. This event assumes that the passive HEPA filters remain functional during a LOSP event and that the leakage from the CTS is through the filter.

Input:

- 2.0E-1 is the initiating event frequency per year for a LOSP event. This is a conservative estimate based on historical data from commercial nuclear power plants (Reference 7.61). This is also conservative because it does not consider the use of backup power from diesel generators. The availability of backup diesel generators would most certainly move the frequency of this event into the non-credible range. See Assumption 3.1.14.

- 3.0E-4 is the mechanical failure per demand of the brake clutch to engage and prevent a load drop during a LOSP event (Reference 7.55). This is a standard failure rate for a mechanical clutch and is assumed to be applicable to the CTS crane. See Assumption 3.1.15.

- 4.8E-4 is the unavailability for a single train HVAC system (see Attachment VIII). This probability is used in all of the CTS event trees. See Assumption 3.1.11.

- 1.06E-3 is the probability of a defective canister. This probability assumes a defective weld and is taken from the Reference 7.23 analysis of welding defects of waste packages. See Assumption 3.3.8.

Drop height used for PULF calculation: 22 feet (670.6 cm) (Reference 7.18) (Assumption 3.3.4)

20.6-Foot Drop of Pressurized MCO Containing N-Reactor Fuel – No Ignition of Metallic Uranium (CTS-106 and CTS-107)

Description: This event is the result of a CTS crane failure which causes a pressurized MCO containing N-Reactor fuel to be dropped and breached from the normal lift height of 20.6 feet. The following conditional probabilities affect the outcome of this event sequence:

Input:

- 5.6E-04 is the initiating event frequency per year for the CTS crane to drop an MCO (see Assumption 3.3.10).
- 0.99 is the probability that an MCO will breach upon impact after being dropped from a height of 20.6 feet onto a concrete floor (see Assumption 3.3.12).
- 0.90 is the probability that an MCO will be pressurized greater than 25 psig (see Assumption 3.3.13). The ARF and RF values used to calculate the dose consequence are based on a pressurized release of particulates from an MCO with more than 25 psig (see Assumption 3.3.14).
- 0.90 is the probability that metallic uranium will not be ignited within an MCO due to the hydrogen and/or uranium hydride content (see Assumption 3.3.15).
- 2.98E-3 is the probability that the HVAC system is unavailable due to either an MCO explosion or normal operational unavailability (see Section 5.2.3).

Table III-1 Canister Transfer System Events and Dose Calculations

Event #	DBE Description	Location	HVAC Available	Frequency (per year)	Cat.	5-km Conservative TEDE Dose (rem)	5-km Best Estimate TEDE Dose (rem)
CTS-006	28'2" (858.5 cm) vertical drop onto floor (1 canister of 44 BWR design basis fuel assemblies breached)	CTS Hot Cell	Y	4.20E-05	2	1.06E-02	3.64E-04
CTS-007	28'2" (858.5 cm) vertical drop onto floor (1 canister of 44 BWR design basis fuel assemblies breached)	CTS Hot Cell	N	2.2E-08	BDBE	>5	1.01E+00
CTS-006	23'3" (708.7 cm) vertical drop onto another canister (1 canister of 44 design basis BWR fuel assemblies breached)	CTS Hot Cell	Y	4.20E-05	2	9.19E-03	3.15E-04
CTS-007	23'3" (708.7 cm) vertical drop onto another canister (1 canister of 44 design basis BWR fuel assemblies breached)	CTS Hot Cell	N	2.2E-08	BDBE	>5	8.47E-01
CTS-006	35' (1066.8 cm) vertical drop onto floor (1 canister of vitrified DHLW breached)	CTS Hot Cell	Y	4.20E-05	2	4.35E-04	1.49E-05
CTS-007	35' (1066.8 cm) vertical drop onto floor (1 canister of vitrified DHLW breached)	CTS Hot Cell	N	2.2E-08	BDBE	1.45E+00	4.97E-01
CTS-002	22' (670.6 cm) vertical drop onto another canister (1 canister of vitrified DHLW breached)	CTS Hot Cell	Y	1.48E-05	2	2.75E-04	9.43E-05
CTS-003	22' (670.6 cm) vertical drop onto another canister (1 canister of vitrified DHLW breached)	CTS Hot Cell	N	7.10E-09	BDBE	9.17E-01	3.14E-01
CTS-010	Loss of Electrical Power (5)	CTS Hot Cell	Y	6.36E-08	BDBE	2.75E-04	9.43E-05
CTS-011	Loss of Electrical Power (5)	CTS Hot Cell	N	3.05E-11	BDBE	9.17E-01	3.14E-01
CTS-004	22' (670.6 cm) vertical drop onto another canister (2 canisters of vitrified DHLW breached)	CTS Hot Cell	Y	1.56E-08	BDBE	5.50E-04	1.89E-04
CTS-005	22' (670.6 cm) vertical drop onto another canister (2 canisters of vitrified DHLW breached)	CTS Hot Cell	N	7.50E-12	BDBE	1.83E+00	6.29E-01
	MCO EVENTS						
CTS-106	20.6-foot vertical drop of MCO from normal lift height to floor	CTS Hot Cell	Y	4.48E-04	2	4.70E-03	TBD
CTS-107	20.6-foot vertical drop of MCO from normal lift height to floor	CTS Hot Cell	N	1.34E-06	2	>5	TBD
	SEISMIC EVENTS						
	49' (1493.5 cm) roof collapse onto DHLW canisters (6)	CTS Hot Cell	Y	1.00E-04	2	3.49E-02	8.68E-03
	49' (1493.5 cm) roof collapse onto DHLW canisters (6)	CTS Hot Cell	N	1.00E-04	2	>5	>5

Assumptions: (all parameters below are specified in Section 3.1 (General Assumptions) or Section 3.3 (CTS Assumptions))

1. X/Q for Best Estimate is 1.44E-5 and X/Q for Conservative is 4.2E-5.
2. Assume design basis of DHLW-canister for drop events is 23 feet. Any drop from greater than 23 feet results in a breach of confinement.
3. Assume an efficiency of 99.97% for HEPA filtration.
4. Dose calculations for commercial fuels are based on design basis BWR fuel for conservative and best estimate cases.
5. Assume drop of 1 DHLWC canister for LOP event from normal operating height (i.e., within design basis).
6. Seismic event assumes 40 canisters of DHLWC in lag storage and 1 canister of commercial BWR fuel are breached.

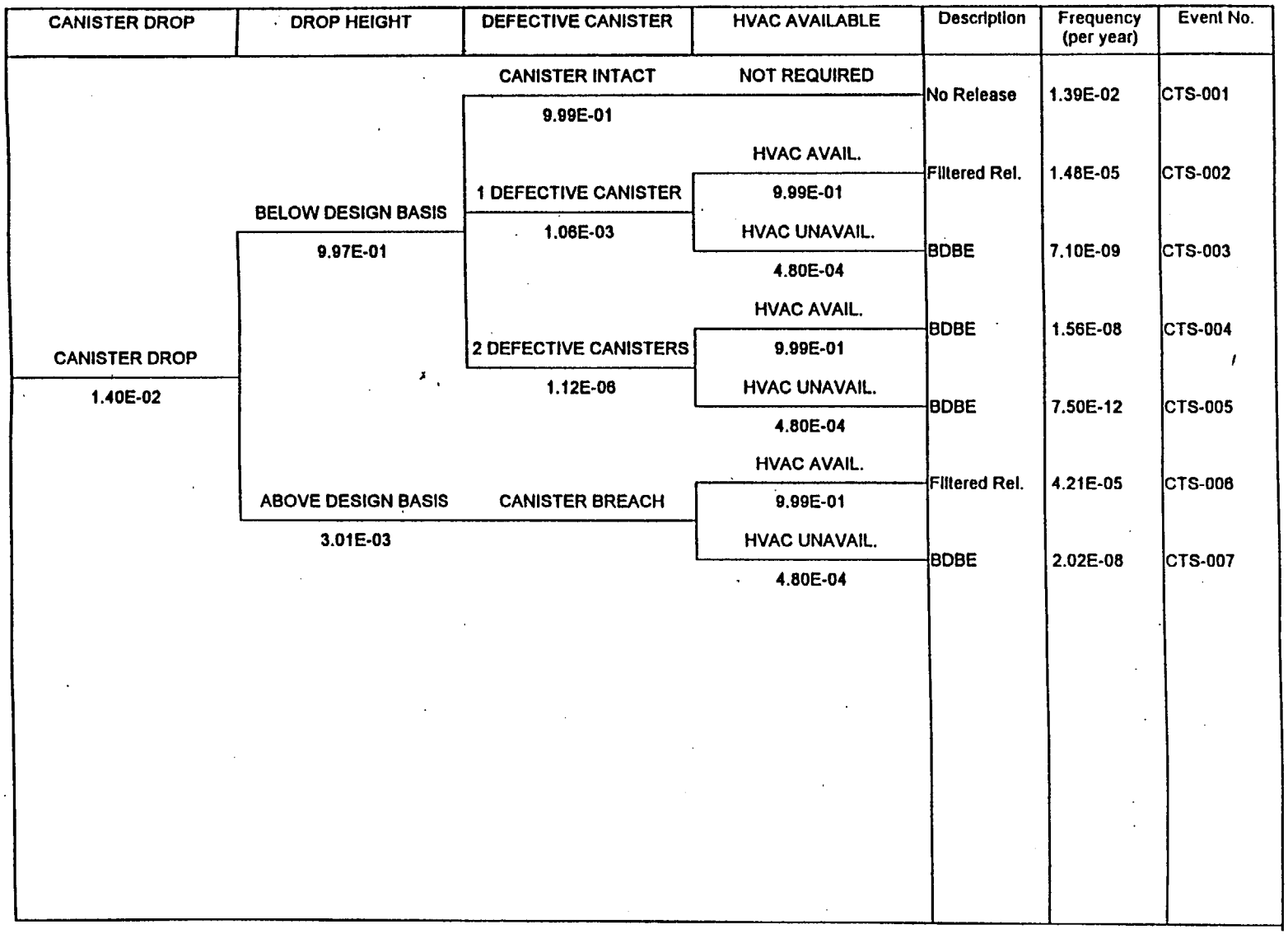
CANISTER DROP
1.40E-02
BELOW DESIGN BASIS
9.97E-01
ABOVE DESIGN BASIS
3.01E-03
CANISTER INTACT
9.99E-01
1 DEFECTIVE CANISTER
1.06E-03
2 DEFECTIVE CANISTERS
1.12E-06
CANISTER BREACH
HVAC AVAILABLE
NOT REQUIRED
HVAC AVAIL.
9.99E-01
HVAC UNAVAIL.
4.80E-04
HVAC AVAIL.
9.99E-01
HVAC UNAVAIL.
4.80E-04
HVAC AVAIL.
9.99E-01
HVAC UNAVAIL.
4.80E-04
Description
Frequency (per year)
Event No.
No Release
1.39E-02
CTS-001
Filtered Rel.
1.48E-05
CTS-002
BDBE
7.10E-09
CTS-003
BDBE
1.56E-08
CTS-004
BDBE
7.50E-12
CTS-005
Filtered Rel.
4.21E-05
CTS-006
BDBE
2.02E-08
CTS-007

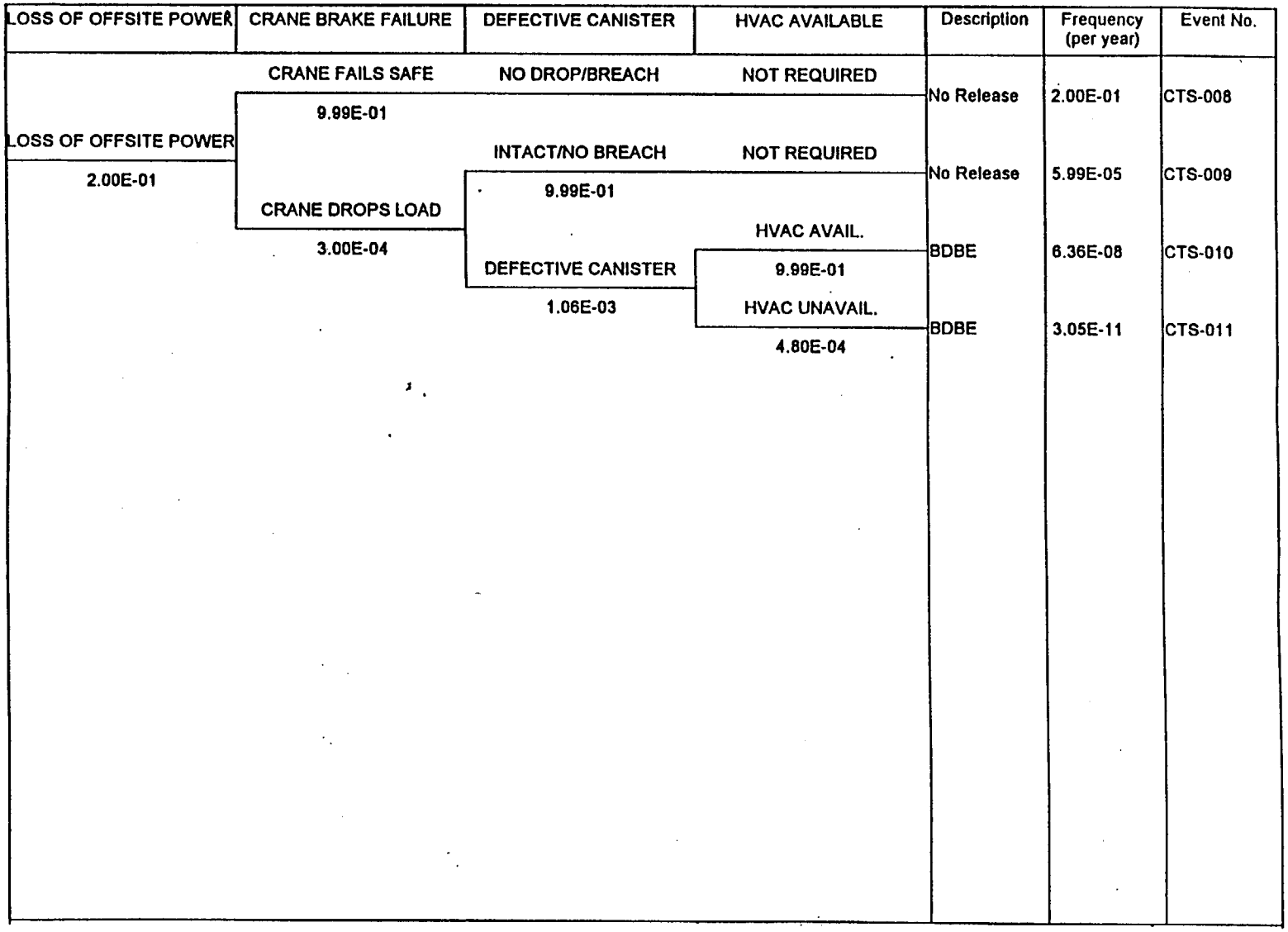
LOSS OF OFFSITE POWER
CRANE BRAKE FAILURE
DEFECTIVE CANISTER
HVAC AVAILABLE
Description
Frequency (per year)
Event No.
CRANE FAILS SAFE
NO DROP/BREACH
NOT REQUIRED
No Release
2.00E-01
CTS-008
9.99E-01
LOSS OF OFFSITE POWER
INTACT/NO BREACH
NOT REQUIRED
No Release
5.99E-05
CTS-009
2.00E-01
9.99E-01
CRANE DROPS LOAD
HVAC AVAIL.
BDBE
6.36E-08
CTS-010
3.00E-04
DEFECTIVE CANISTER
9.99E-01
1.06E-03
HVAC UNAVAIL.
BDBE
3.05E-11
CTS-011
4.80E-04

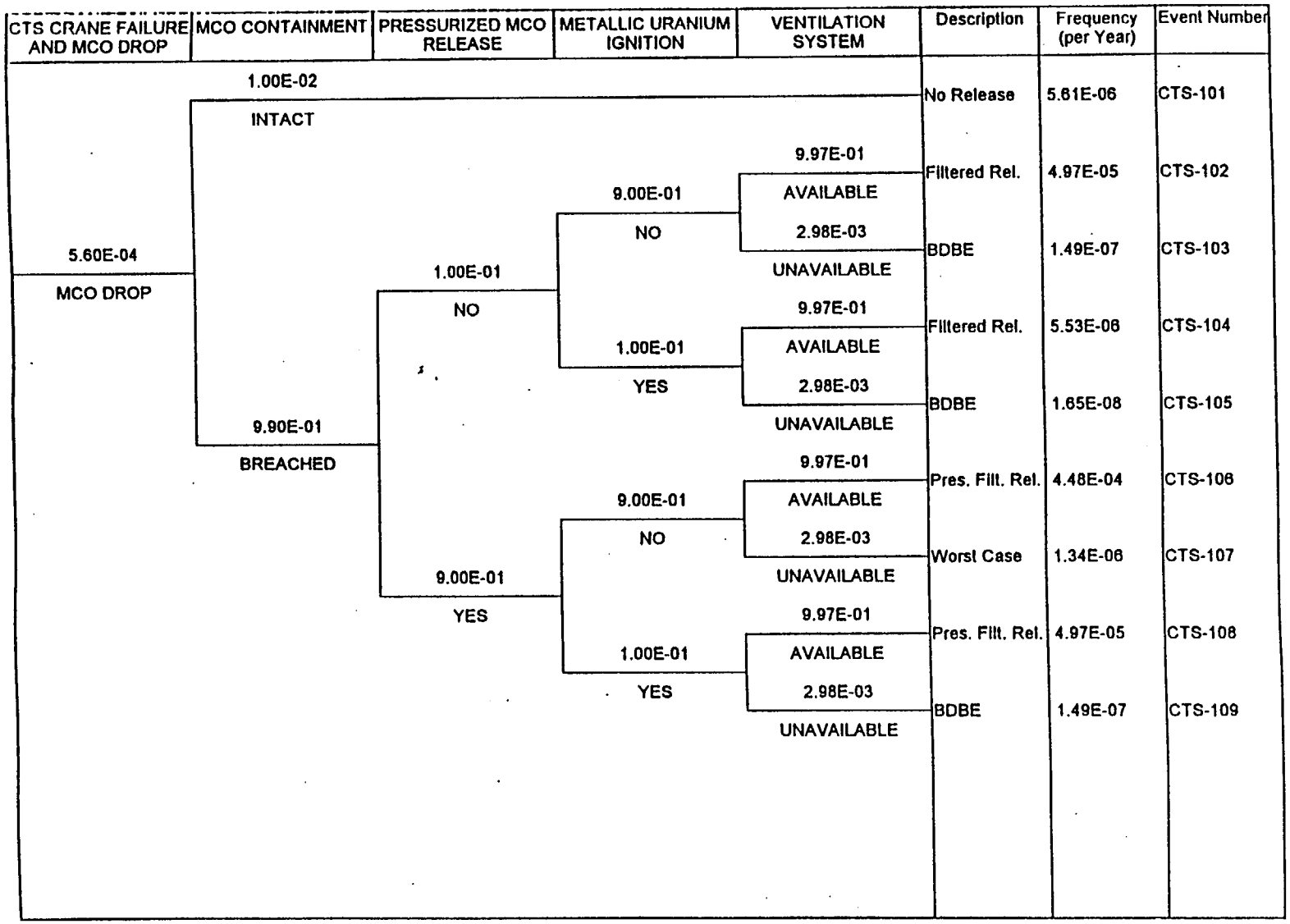
CTS CRANE FAILURE AND MCO DROP
MCO CONTAINMENT
PRESSURIZED MCO RELEASE
METALLIC URANIUM IGNITION
VENTILATION SYSTEM
Description
Frequency (per Year)
Event Number
5.60E-04
MCO DROP
1.00E-02
INTACT
9.90E-01
BREACHED
1.00E-01
NO
9.00E-01
YES
9.00E-01
NO
1.00E-01
YES
9.97E-01
AVAILABLE
2.98E-03
UNAVAILABLE
No Release 5.61E-06 CTS-101
Filtered Rel. 4.97E-05 CTS-102
BDBE 1.49E-07 CTS-103
Filtered Rel. 5.53E-06 CTS-104
BDBE 1.65E-08 CTS-105
Pres. Filt. Rel. 4.48E-04 CTS-106
Worst Case 1.34E-06 CTS-107
Pres. Filt. Rel. 4.97E-05 CTS-108
BDBE 1.49E-07 CTS-109

Attachment IV - Assembly Transfer System (SU10) Event Trees and Supporting Documentation

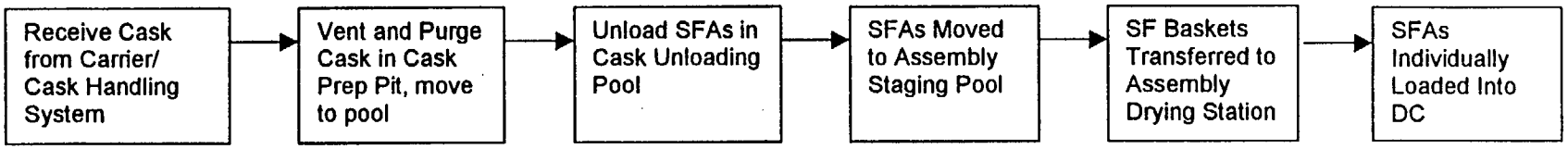

Table IV-1 Design Basis Events
(bounding credible events shown in bold)

Event No.	DBE Description	Location	Number of Breached SFAs	Event Frequency (per year)	Cat.	Fuel Type	5 km Conservative TEDE Dose (rem)	Fuel Type	5 km Best Estimate TEDE Dose
Events Associated with Dropping of PWR Basket(s)									
(ATS 001, 003)	**16.5 ft. (Approximate) Basket Drop (4-PWR) Onto Another Basket of 4 PWR SFAs in Dryer**	**Assembly Handling Cell**	**8 PWR**	**1.14E-02 w/HVAC**	**1**	**100% PWR**	**4.9E-03 rem**	**50% PWR**	**7.4E-05 rem**
(ATS 001, 003)	2 ft. (Approximate) Basket Drop (4-PWR) Onto Cell Floor	"	4 PWR	1.14E-02 w/HVAC	1	100% PWR	8.4E-04 rem	50% PWR	2.0E-05 rem
(ATS 002, 004)	16.5 ft. (Approximate) Basket Drop (4-PWR) Onto Another Basket of 4 PWR SFAs in Dryer	"	8 PWR	2.79E-07 w/o HVAC	BDBE	100% PWR	>5 rem	50% PWR	2.0E-01 rem
Events Associated with Dropping of BWR Basket(s)									
(ATS 005 007)	**25 ft. (Approximate) Basket Drop (8-BWR) Onto Another Basket of 8 BWR SFAs in Dryer**	**Assembly Handling Cell**	**16 BWR**	**7.40E-03 w/HVAC**	**2**	**BWR DBF**	**3.5E-03 rem**	**50% BWR DBF**	**1.5E-04 rem**
(ATS 005, 007)	8 ft. (Approximate) Basket Drop (8-BWR) Onto Cell Floor	"	8 BWR	7.40E-03 w/HVAC	2	BWR DBF	8.6E-04 rem	50% BWR DBF	3.9E-05 rem
(ATS 006 008)	25 ft. (Approximate) Basket Drop (8-BWR) Onto Another Basket of 8 BWR SFAs in Dryer	"	16 BWR	1.81E-07 w/o HVAC	BDBE	BWR DBF	>5 rem	50% BWR DBF	4.1E-01 rem

Table IV-1 Design Basis Events (continued)

Event No.	DBE Description	Location	Number of Breached SFAs	Event Frequency (per year)	Cat.	Fuel Type	5 km Conservative TEDE Dose (rem)	Fuel Type	5 km Best Estimate TEDE Dose
Events Associated with Dropping of PWR SFA									
(ATS 009, 011)	10.5 ft. (Approximate) Vertical Drop of a SFA Onto Cell Floor	Assembly Handling Cell	1 PWR	4.04E-02 w/HVAC	1	100% PWR	4.5E-04 rem	50% PWR	7.5E-06 rem
(ATS 009, 011)	40.5 ft. (Approximate) Vertical Drop of a SFA Into an Empty DC	"	1 PWR	4.04E-02 w/HVAC	1	100% PWR	1.3E-03 rem	50% PWR	1.60E-05 rem
(ATS 009, 011)	31 ft. (Approximate) Vertical Drop of a SFA Onto Another SFA in the DC	"	2 PWR	4.04E-02 w/HVAC	1	100% PWR	2.0E-03 rem	50% PWR	2.7E-05 rem
(ATS 010, 012)	10.5 ft. (Approximate) Vertical Drop of a SFA Onto Cell Floor	"	1 PWR	9.90E-07 w/o HVAC	BDBE	100% PWR	1.2E+00 rem	50% PWR	2.0E-02 rem
(ATS 010, 012)	40.5 ft. (Approximate) Vertical Drop of a SFA Into an Empty DC	"	1 PWR	9.90E-07 w/o HVAC	BDBE	100% PWR	3.9E+00 rem	50% PWR	4.8E-01 rem
(ATS 010, 012)	31 ft. (Approximate) Vertical Drop of a SFA Onto Another SFA in the DC	"	2 PWR	9.90E-07 w/o HVAC	BDBE	100% PWR	>5 rem	50% PWR	7.9E-02 rem

Table IV-1 Design Basis Events (continued)

Event No.	DBE Description	Location	Number of Breached SFAs	Event Frequency (per year)	Cat.	Fuel Type	5 km Conservative TEDE Dose (rem)	Fuel Type	5 km Best Estimate TEDE Dose
Events Associated with Dropping of BWR SFA									
(ATS 013, 015)	13 ft. (Approximate) Vertical Drop of a SFA Onto Cell Floor	Assembly Handling Cell	1 BWR	5.45E-02 w/HVAC	1	BWR DBF	1.4E-04 rem	50% BWR DBF	6.1E-06 rem
(ATS 014, 016)	13 ft. (Approximate) Vertical Drop of a SFA Onto Cell Floor	"	1 BWR	1.34E-06 w/o HVAC	2	BWR DBF	3.4E-01 rem	50% BWR DBF	1.5E-02 rem
(ATS 013, 015)	43 ft. (Approximate) Vertical Drop of a SFA Into an Empty DC	"	1 BWR	5.45E-02 w/HVAC	1	BWR DBF	3.4E-04 rem	50% BWR DBF	1.4E-05 rem
(ATS 014, 016)	43 ft. (Approximate) Vertical Drop of a SFA Into an Empty DC	"	1 BWR	1.34E-06 w/o HVAC	2	BWR DBF	1.0E+00 rem	50% BWR DBF	4.1E-02 rem
(ATS 013, 015)	36 ft. (Approximate) Vertical Drop of a SFA Onto Another SFA in the DC	"	2 BWR	5.45E-02 w/HVAC	1	BWR DBF	5.9E-04 rem	50% BWR DBF	2.4E-05 rem
(ATS 014, 016)	36 ft. (Approximate) Vertical Drop of a SFA Onto Another SFA in the DC	"	2 BWR	1.34E-06 w/o HVAC	2	BWR DBF	1.7E+00 rem	50% BWR DBF	6.9E-02 rem
Events Associated with Dropping of PWR Basket(s) in Pool									
(ATS 017, 019)	40 ft. (Approximate) PWR Basket Drop Onto Another Basket in the pool	Assembly Staging Pool	8 PWR	1.14E-02 w/HVAC	1	100% PWR	8.1E-04 rem	50% PWR	1.3E-05 rem
(ATS 018, 020)	40 ft. (Approximate) PWR Basket Drop Onto Another Basket in the pool	"	8 PWR	5.47E-06 w/o HVAC	2	100% PWR	8.1E-04 rem	50% PWR	1.3E-05 rem

Table IV-1 Design Basis Events (continued)

Event No.	DBE Description	Location	Number of Breached SFAs	Event Frequency (per year)	Cat.	Fuel Type	5 km Conservative TEDE Dose (rem)	Fuel Type	5 km Best Estimate TEDE Dose
Events Associated with Dropping of BWR Basket(s) in Pool									
(ATS 021, 023)	49 ft. (Approximate) BWR Basket Drop Onto Another Basket in the pool	Assembly Staging Pool	16 BWR	7.40E-03 w/HVAC	2	BWR DBF	6.5E-04 rem	50% BWR DBF	2.3E-05 rem
(ATS 022, 024)	49 ft. (Approximate) BWR Basket Drop Onto Another Basket in the pool	"	16 BWR	3.55E-06 w/o HVAC	2	BWR DBF	6.5E-04 rem	50% BWR DBF	2.3E-05 rem
Events Associated with Loss-of-Offsite Power									
(ATS 026, 028)	16.5 ft. (Approximate) Basket Drop (4-PWR) Onto Another Basket of 4 PWR SFAs in Dryer Due to Loss of Power	Assembly Handling Cell	8 PWR	3.04E-05 w/HVAC	2	100% PWR	4.9E-03 rem	50% PWR	7.4E-05 rem
(ATS 027, 029)	16.5 ft. (Approximate) Basket Drop (4-PWR) Onto Another Basket of 4 PWR SFAs in Dryer Due to Loss of Power	"	8 PWR	7.45E-10 w/o HVAC	BDBE	100% PWR	>5 rem	50% PWR	2.0E-01 rem
(ATS 026, 028)	25 ft. (Approximate) Basket Drop (8-BWR) Onto Another Basket of 8 BWR SFAs in Dryer Due to Loss of Power	"	16 BWR	3.04E-05 w/HVAC	2	100% PWR	3.5E-03 rem	50% BWR DBF	1.5E-04 rem
(ATS 027, 029)	25 ft. (Approximate) Basket Drop (8-BWR) Onto Another Basket of 8 BWR SFAs in Dryer Due to Loss of Power	"	16 BWR	7.45E-10 w/o HVAC	BDBE	BWR DBF	>5 rem	50% BWR DBF	4.1E-01 rem

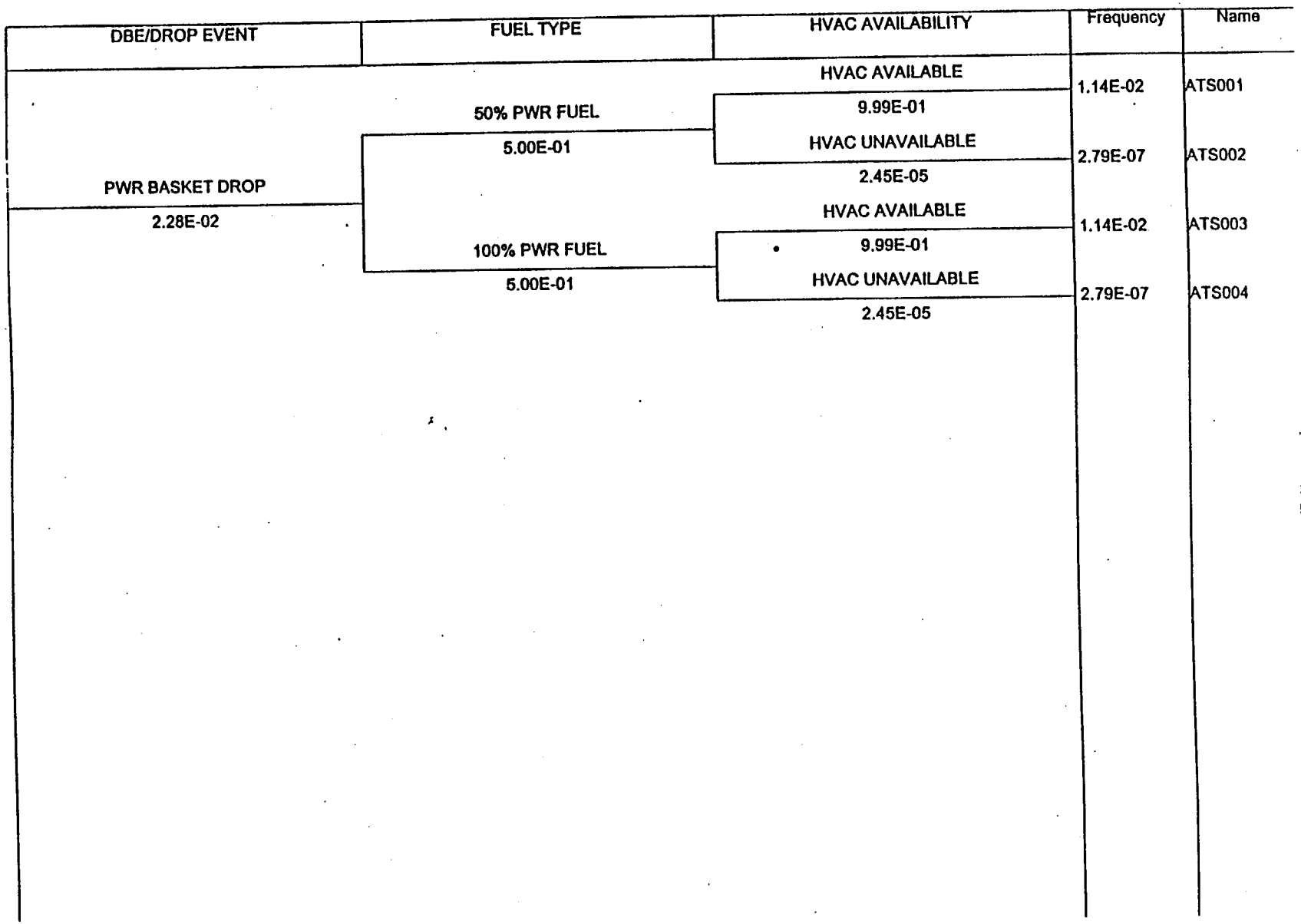
DBE/DROP EVENT
FUEL TYPE
HVAC AVAILABILITY
Frequency
Name
PWR BASKET DROP
2.28E-02
50% PWR FUEL
5.00E-01
100% PWR FUEL
5.00E-01
HVAC AVAILABLE
9.99E-01
HVAC UNAVAILABLE
2.45E-05
HVAC AVAILABLE
9.99E-01
HVAC UNAVAILABLE
2.45E-05
1.14E-02
ATS001
2.79E-07
ATS002
1.14E-02
ATS003
2.79E-07
ATS004

DBE/DROP EVENT	FUEL TYPE	HVAC AVAILABILITY	Frequency	Name
BWR BASKET DROP 1.48E-02	50% BWR FUEL 5.00E-01	HVAC AVAILABLE 9.99E-01	7.40E-03	ATS005
		HVAC UNAVAILABLE 2.45E-05	1.81E-07	ATS006
	BWR DBF FUEL 5.00E-01	HVAC AVAILABLE 9.99E-01	7.40E-03	ATS007
		HVAC UNAVAILABLE 2.45E-05	1.81E-07	ATS008

DBE/DROP EVENT	FUEL TYPE	HVAC AVAILABILITY	Frequency	Name
PWR ASSEMBLY DROP 8.08E-02	50% PWR FUEL 5.00E-01	HVAC AVAILABLE 9.99E-01	4.04E-02	ATS009
		HVAC UNAVAILABLE 2.45E-05	9.90E-07	ATS010
	100% PWR FUEL 5.00E-01	HVAC AVAILABLE 9.99E-01	4.04E-02	ATS011
		HVAC UNAVAILABLE 2.45E-05	9.90E-07	ATS012

DBE/DROP EVENT	FUEL TYPE	HVAC AVAILABILITY	Frequency	Name
BWR ASSEMBLY DROP 1.09E-01	50% BWR FUEL 5.00E-01	HVAC AVAILABLE 9.99E-01	5.45E-02	ATS013
		HVAC UNAVAILABLE 2.45E-05	1.34E-06	ATS014
	BWR DBF FUEL 5.00E-01	HVAC AVAILABLE 9.99E-01	5.45E-02	ATS015
		HVAC UNAVAILABLE 2.45E-05	1.34E-06	ATS016

DBE/DROP EVENT	FUEL TYPE	HVAC AVAILABILIT	Frequency	Name
PWR BASKET DROP - IN POOL 2.28E-02	50% PWR FUEL 5.00E-01	HVAC AVAILABLE 9.99E-01	1.14E-02	ATS017
		HVAC UNAVAILABLE 4.80E-04	5.47E-06	ATS018
	100% PWR FUEL 5.00E-01	HVAC AVAILABLE 9.99E-01	1.14E-02	ATS019
		HVAC UNAVAILABLE 4.80E-04	5.47E-06	ATS020

DBE/DROP EVENT	FUEL TYPE	HVAC AVAILABILITY	Frequency	Name
BWR BASKET DROP - IN POOL	50% BWR FUEL	HVAC AVAILABLE	7.40E-03	ATS021
1.48E-02	5.00E-01	9.99E-01		
		HVAC UNAVAILABLE	3.55E-06	ATS022
		4.80E-04		
	BWR DBF FUEL	HVAC AVAILABLE	7.40E-03	ATS023
	5.00E-01	9.99E-01		
		HVAC UNAVAILABLE	3.55E-06	ATS024
		4.80E-04		

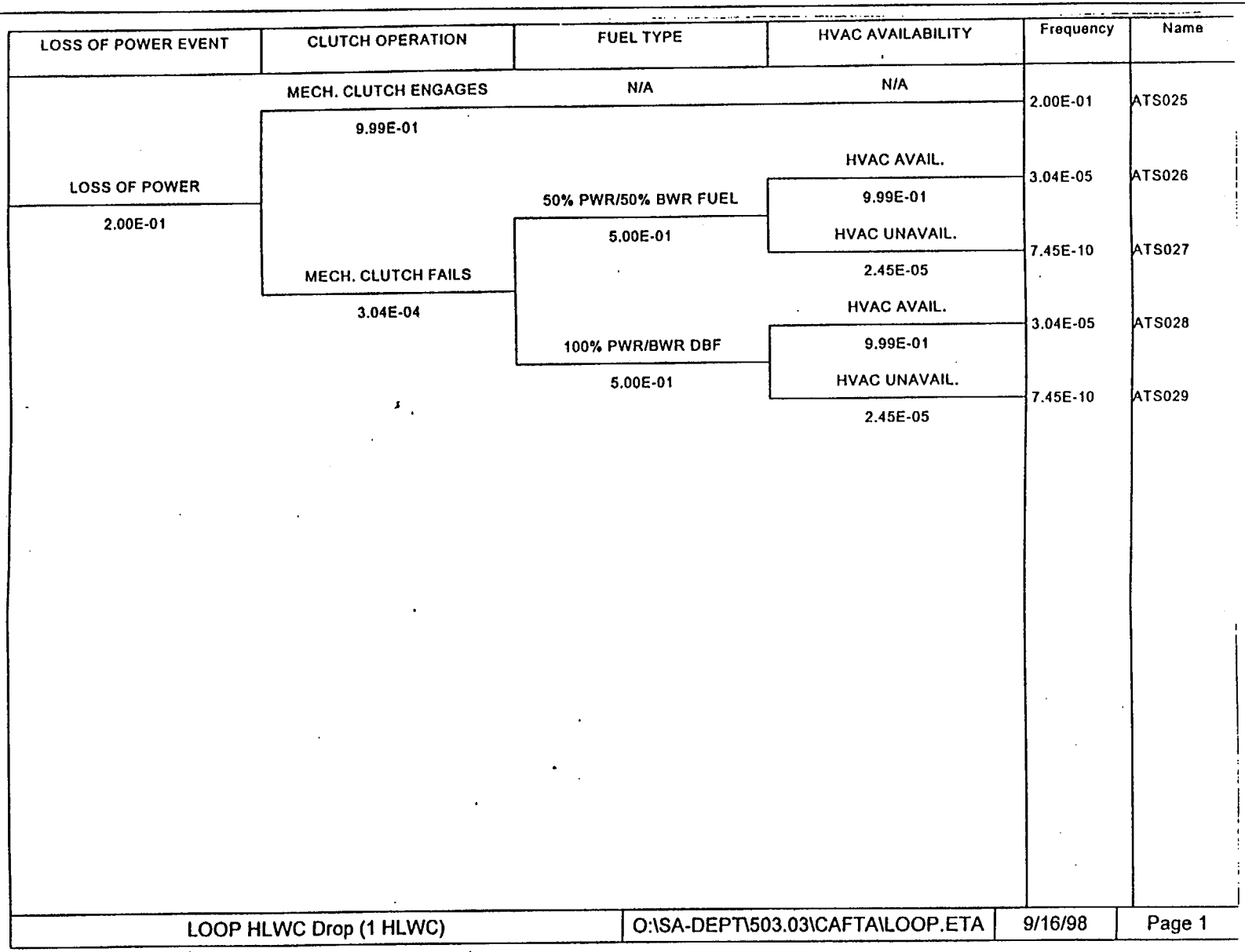
LOSS OF POWER EVENT
CLUTCH OPERATION
FUEL TYPE
HVAC AVAILABILITY
Frequency
Name
LOSS OF POWER
2.00E-01
MECH. CLUTCH ENGAGES
9.99E-01
MECH. CLUTCH FAILS
3.04E-04
50% PWR/50% BWR FUEL
5.00E-01
100% PWR/BWR DBF
5.00E-01
N/A
HVAC AVAIL.
9.99E-01
HVAC UNAVAIL.
2.45E-05
HVAC AVAIL.
9.99E-01
HVAC UNAVAIL.
2.45E-05
N/A
2.00E-01
ATS025
3.04E-05
ATS026
7.45E-10
ATS027
3.04E-05
ATS028
7.45E-10
ATS029
LOOP HLWC Drop (1 HLWC)
O:\SA-DEPT\503.03\CAFTA\LOOP.ETA
9/16/98
Page 1

Attachment V – Disposal Container Handling System (SU13) Event Trees and Supporting Documentation

1.0 Summary

A brief description of each DCHS event tree and the corresponding input numbers are presented in Section 2.0 below.

A summary table of all the events evaluated in the DCHS, including frequencies and dose consequences, is shown in Section 3.0 of this attachment. The doses shown for the events were calculated using the methodology documented in Section 2.0 of the main document and in Attachment IX.

DCHS event trees are presented in Section 4.0 of this attachment. Event trees were generated using CAFTA for Windows, Event Tree Editor, version 3.1.

Other support information, including a fault tree to develop the welding burnthrough event frequency and preliminary equipment design sketches, are included in Section 5.0 of this attachment. The Preliminary design sketches of specific DC Handling System equipment and dimensions were used to calculate maximum drop heights for the various events. The sketches, reproduced on pages V-4 through V-10, were obtained from the MGR Surface Design organization.

2.0 Event Descriptions

6m Vertical Drop (2-block DC crane failure) at the DC Tilting Station

Description: This event is due to an abnormal 2-block crane drop from the maximum height at the Tilting Station, based on preliminary sketches provided by Surface Design ~~(Ref. 7.32)~~ (Attachment V, pg. V-18 of V-19)

Event Sequence Calculations: **DC01** 1.4E-5 x 524 x 0.24 x 0.9995 = 1.8E-3/year
DC02 1.4E-5 x 524 x 0.24 x 4.8E-4 = 8.4E-7/year

JAK 11/19/98

Inputs:

- 1.4E-5 is the assumed heavy-haul drop frequency per lift for the DC bridge crane, based on actuarial data provided by the U.S. Navy (see Assumption 3.5.9).
- 524 is the maximum number of DC lifts per year, based on one lift per DC multiplied by 524 DCs processed per year (see Assumption 3.5.1).
- 0.24 is the probability that a crane drop will be a 2-block event (see Attachment X). If the crane drop is from the normal operating lift height of less than 2 meters, it's assumed that a radiological release will not occur (Assumption 3.1.8).
- 4.8E-4 is the unavailability for a single train HVAC system (see Assumption 3.1.11). This probability is used in all of the DC Handling System event trees.
- 0.9995 is the calculated probability (i.e., 1.0-4.8E-4) that the HVAC system for a single train HVAC system, is available (see Assumption 3.1.11). This probability is used in all of the DC Handling System event trees.

Equivalent PULF height (i.e., height used to calculate particulate release contribution to offsite dose) = 6 meters.

Loss-of-Offsite Power (LOSP) and 2m Vertical Drop at the DC Tilting Station

Description: This event is due to the DC bridge crane dropping a DC during a normal operating lift, assuming a LOSP event occurs. The DC drop is due to failure of the crane brake clutch to engage and prevent a load drop (fail safe). This event assumes that passive HEPA filters remain functional during a LOSP event and that the leakage from the DCHS is through the filter.

Event Sequence Calculations: **DC03** 0.20 x 3.0E-4 x 0.9995 = 6.0E-5/year
DC04 0.20 x 3.0E-4 x 4.8E-4 = 2.9E-8/year

Inputs:

- 0.20 is the initiating event frequency per year for a LOSP event (Assumption 3.1.14). This is a conservative estimate based on historical data from commercial nuclear power plants (Ref. 7.61). This is also conservative because it did not consider the use of backup power from diesel generators. The availability of backup diesel generators would most certainly move the frequency of this event into the non-credible range.

- 3.0E-4 is the mechanical failure per demand of the brake clutch to engage and prevent a load drop during a LOSP event (Ref. 7.55). This is a standard failure rate for a mechanical clutch and is assumed to be applicable to the DC bridge crane (Assumption 3.1.15).

Equivalent PULF height (i.e., height used to calculate particulate release contribution to offsite dose) = 2 meters.

2.5m Horizontal Drop in the Transfer/Decon Cell

Description: This event is due to the horizontal lifting system dropping a DC during a normal operating lift.

Event Sequence Calculations: **DC05** (6.14E-7 x 524) x 0.9995 = 3.2E-4/year
DC06 (6.14E-7 x 524) x 4.8E-4 = 1.5E-7/year

Inputs:

- 6.14E-7 is the horizontal lift system failure rate per year. This failure rate is based on the gantry fault tree developed in Reference 6.29, pg. 26-28, assuming a mission time of 0.6 hrs for the horizontal lift at the Transfer/Decon cell (Ref. 7.34).

- 524 is the maximum number of DCs handled in a year (Assumption 3.5.1)

Equivalent PULF height (i.e., height used to calculate particulate release contribution to offsite dose) = 2.5 meters.

Loss-of-Offsite Power and 1m Horizontal Drop in the Transfer/Decon Cell

Description: This event is due to the horizontal lift system dropping a DC during a normal operating lift, assuming a LOSP event occurs. The DC drop is due to failure of the crane brake clutch to engage and prevent a load drop (fail safe). This event assumes that passive HEPA filters remain functional during a LOSP event and that the leakage from the DCHS is through the filter.

Event Sequence Calculations: **DC07** 0.20 x 3.0E-4 x 0.9995 = 6.0E-5/year
DC08 0.20 x 3.0E-4 x 4.8E-4 = 2.9E-8/year

Inputs:

- 0.20 is the initiating event frequency for a loss-of-offsite power event (Assumption 3.1.14). This is a conservative estimate based on historical data from commercial nuclear power plants (Ref. 7.61). This is also conservative because it did not consider the use of backup power from diesel generators. The availability of backup diesel generators would most certainly move the frequency of this event into the non-credible range.

- 3.0E-4 is the mechanical failure per demand of the brake clutch to engage and prevent a load drop during a LOSP event (Ref. 7.55). This is a standard failure rate for a mechanical clutch and is assumed to be applicable to the horizontal lifting system. See Assumption 3.1.15.

Equivalent PULF height (i.e., height used to calculate particulate release contribution to offsite dose) = 1 meter

Welding Burnthrough of Inner DC Lid at the DC Welding Station

Description: This event occurs as a result of mechanical and operator failure while the DC is at the welding station. For a release to occur, the welder must burn through the fuel cladding.

Event Sequence Calculations: **DC13** 8.4E-4 x 0.9995 = 8.4E-4/year
DC14 8.4E-4 x 4.8E-4 = 4.0E-7/year

- 8.4E-4 is the probability per year that a welding burnthrough event will occur, based on the preliminary fault tree on Page V-12. This event requires a mechanical failure (welder fails to stop or turntable stops rotating) to initiate and an operator failure to stop the event from progressing.

Equivalent PULF height (i.e., height used to calculate particulate release contribution to offsite dose) = 0 meters.

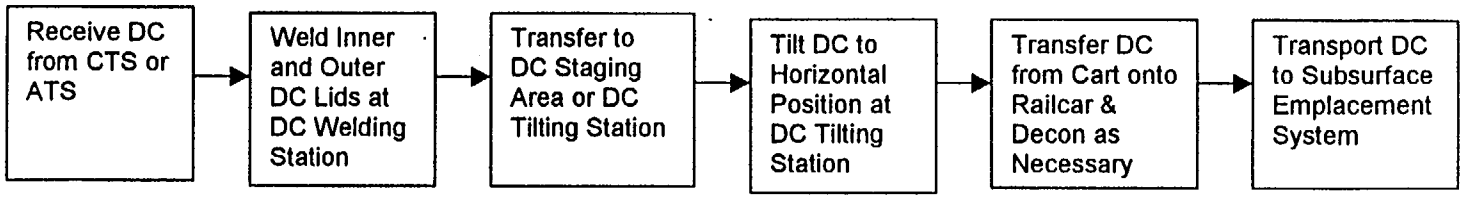

(Ref. 7.26)

3.0 Summary Table of DCHS Events

Event #	DBE Description	Location	HVAC Available?[a]	Event Tree Frequency (per year)	Cat.	5-km Conservative TEDE Dose (rem)[e]	5-km Best Estimate TEDE Dose (rem)[f]
DC01	6-m Vertical Drop (2-Block Crane Failure)	DC Tilting Station	Y	1.8E-03	2	7.2E-03	6.1E-04
DC02	6-m Vertical Drop (2-Block Crane Failure)	DC Tilting Station	N	8.4E-07	BDBE	>5	6.0E-01
DC03	LOSP & 2-m Vertical Drop[b]	DC Tilting Station	Y	6.0E-05	2	Zero[d]	Zero[d]
DC04	LOSP & 2-m Vertical Drop[b]	DC Tilting Station	N	2.9E-8	BDBE	Zero[d]	Zero[d]
DC05	2.5-m Horizontal Drop of DC	Transfer/Decon	Y	3.2E-04	2	4.5E-03	5.4E-04
DC06	2.5-m Horizontal Drop of DC	Transfer/Decon	N	1.5E-07	BDBE	>5	3.6E-01
DC07	LOSP & 1-m Horizontal Drop[b]	Transfer/Decon	Y	6.0E-05	2	Zero[d]	Zero[d]
DC08	LOSP & 1-m Horizontal Drop[b]	Transfer/Decon	N	2.9E-8	BDBE	Zero[d]	Zero[d]
DC13	Welding Burnthrough Inner DC Lid	Welding Station	Y	8.4E-04	2	2.6E-03[g]	4.9E-04[g]
DC14	Welding Burnthrough Inner DC Lid	Welding Station	N	4.0E-07	BDBE	1.9E+00[g]	2.0E-01[g]

BDBE = Beyond Design Basis Event, frequency < 10^{-6}/yr

Notes: (all parameters below are specified in General Assumptions, Section 3.1)
[a] HVAC unavailability = 4.8×10^{-4} (see Attachment VIII); with HVAC, single-stage HEPA filter mitigates 99.97% of particulate release.
[b] Crane brake clutch fails to engage and prevent load drop after LOSP event (Ref. 7.55) – maximum normal operating lift height.
[c] Reserved.
[d] No radiological release since drop height is less than DC design basis.
[e] DC breach, 21-PWR SFAs, PWR DBF source term, 100% rod failure, EPF=0.2; 10CFR60 limit = 5 rem.
[f] DC breach, 21-PWR SFAs, 50% PWR source term, 10% rod failure, EPF=0.2; 10CFR60 limit = 5 rem.
[g] The dose assessment for this event assumed that no additional PULF fraction (see Attachment I) of particulates was generated.

4.0 Event Trees

Event trees for the following events are provided in this section:

Event	Event Numbers	Attachment Page
Vertical crane drop at DC Tilting Station	DC01, DC02	V-6
Loss-of-offsite power & vertical drop at Tilting Station	DC03, DC04	V-7
Horizontal drop by horizontal lifting system	DC05, DC06	V-8
Loss-of-offsite power & horizontal drop by horizontal lifting system	DC07, DC08	V-9
Welding burnthrough	DC13, DC14	V-10

DC CRANE DROP	2-BLOCK EVENT	HVAC AVAILABILITY	Event #	Category	Frequency (per year)	Deterministic TEDE (rem)	Best Est. TEDE (rem)
Vertical DC Drop at Tilting Station	Probability that a 2-block event will occur	Probability that HVAC will be unavailable upon demand					
INITIATING EVENT 7.30E-03	YES 2.40E-01	AVAILABLE 9.99E-01	DC01	2	1.75E-03	7.2E-03	6.1E-04
		UNAVAILABLE 4.80E-04	DC02	BDBE	8.41E-07	1.7E+01	6.0E-01
	NO 7.60E-01		N/A	2	5.55E-03	No Release	No Release

DC Handling System - 6m Vertical DC Drop at Tilting Station	O:\SA-DEPT\503.03\CAFTA\DC01-02.ETA	9/16/98	Page 1

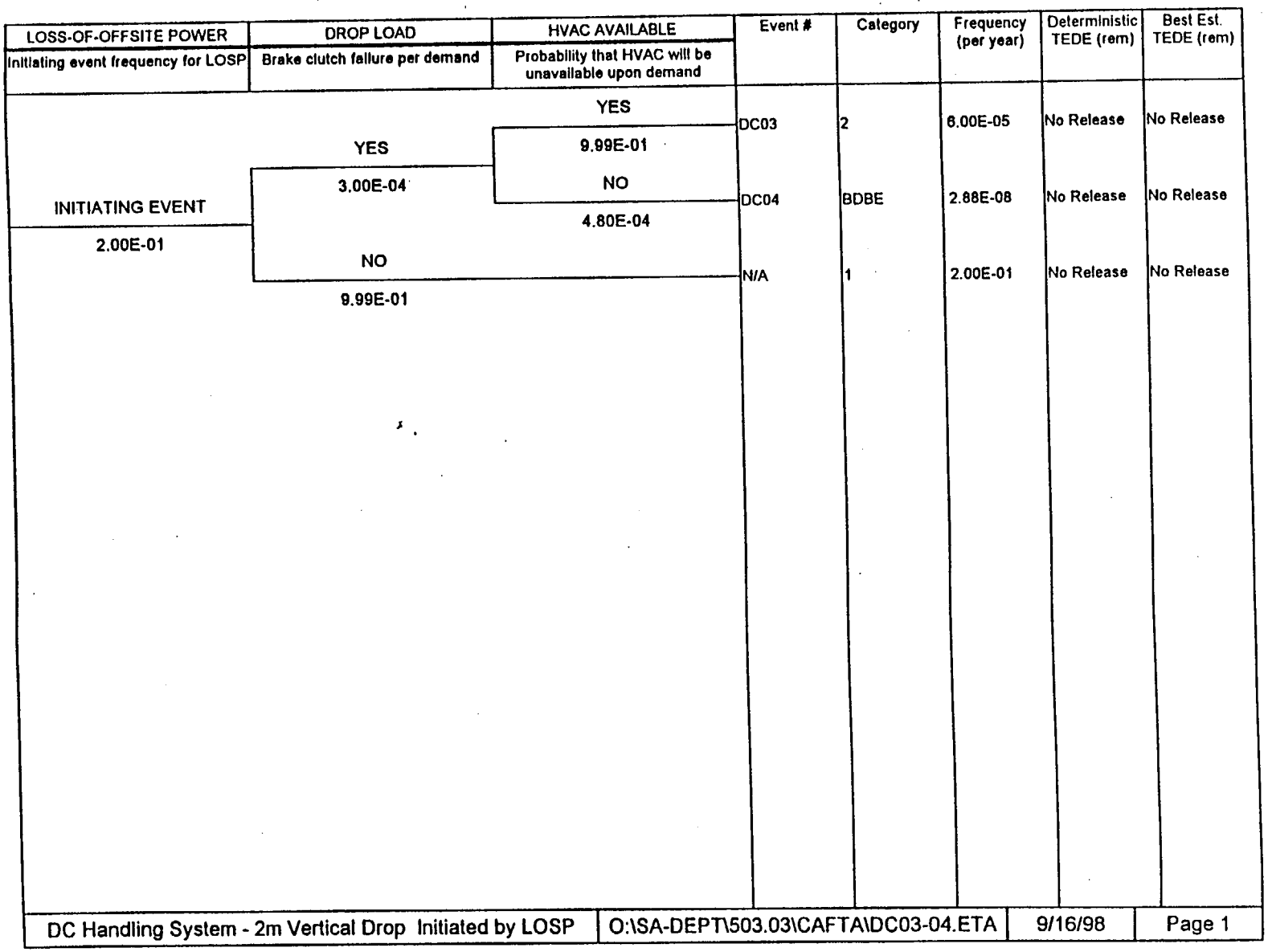
LOSS-OF-OFFSITE POWER
Initiating event frequency for LOSP
DROP LOAD
Brake clutch failure per demand
HVAC AVAILABLE
Probability that HVAC will be unavailable upon demand
INITIATING EVENT
2.00E-01
YES
3.00E-04
NO
9.99E-01
YES
9.99E-01
NO
4.80E-04
DC03
DC04
N/A
Event #
Category
Frequency (per year)
Deterministic TEDE (rem)
Best Est. TEDE (rem)
2
BDBE
1
6.00E-05
2.88E-08
2.00E-01
No Release
No Release
No Release
No Release
No Release
No Release
DC Handling System - 2m Vertical Drop Initiated by LOSP
O:\SA-DEPT\503.03\CAFTA\DC03-04.ETA
9/16/98
Page 1

HORIZONTAL DC DROP	HVAC AVAILABILITY	Event #	Category	Frequency (per year)	Deterministic TEDE (rem)	Best Est. TEDE (rem)
2.5-m DC Drop by horizontal lift system	Probability that HVAC is unavailable upon demand					
	AVAILABLE					
INITIATING EVENT	9.99E-01	DC05	2	3.20E-04	4.5E-03	5.4E-04
3.20E-04	UNAVAILABLE					
	4.80E-04	DC06	BDBE	1.54E-07	8.3E+00	3.6E-01

DC Handling System - 2.5m Horizontal DC Drop	O:\SA-DEPT\503.03\CAFTA\DC05-06.ETA	9/16/98	Page 1

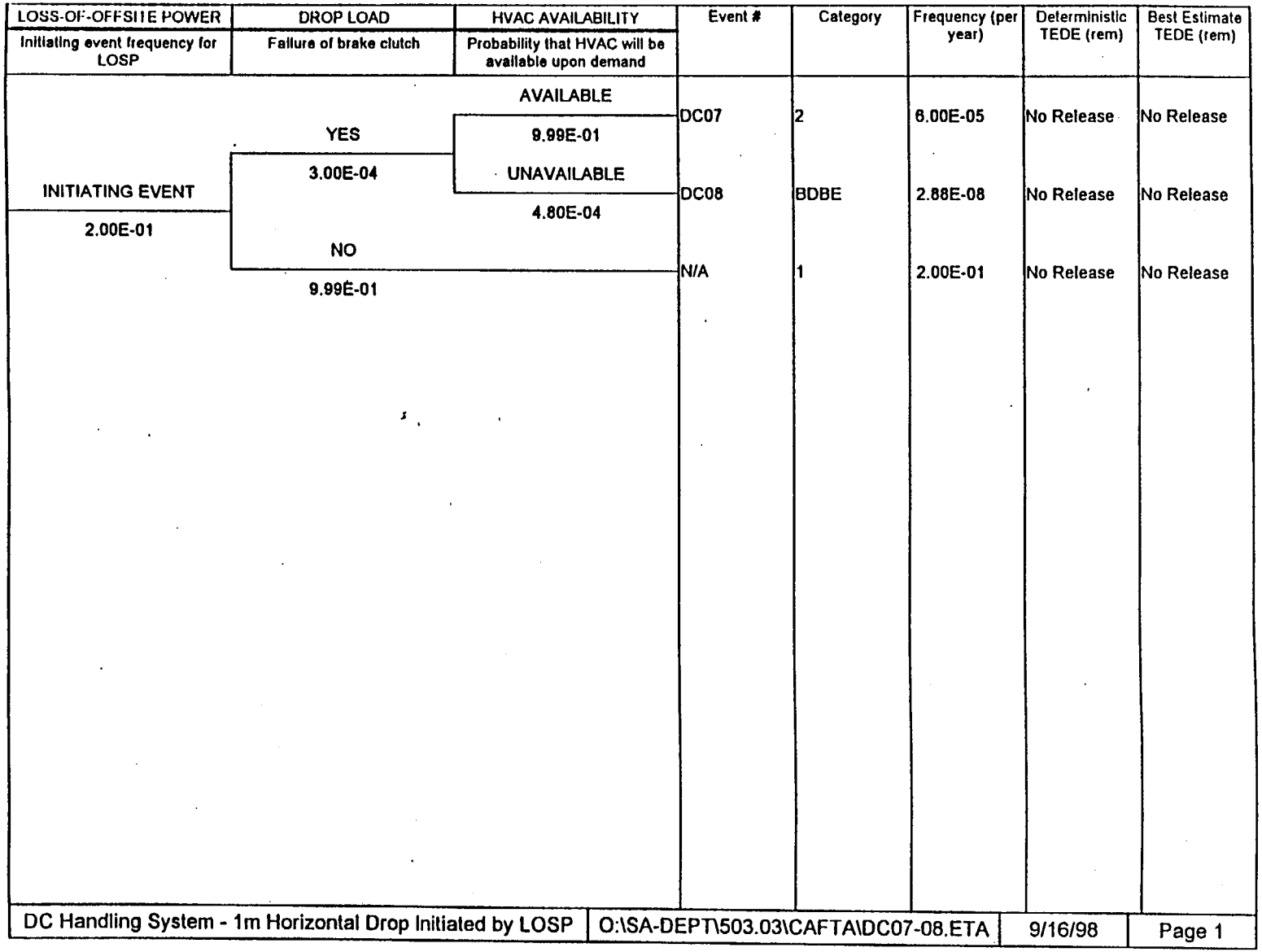
LOSS-OF-OFFSITE POWER
Initiating event frequency for LOSP
DROP LOAD
Failure of brake clutch
HVAC AVAILABILITY
Probability that HVAC will be available upon demand
Event #
Category
Frequency (per year)
Deterministic TEDE (rem)
Best Estimate TEDE (rem)
INITIATING EVENT
2.00E-01
YES
3.00E-04
NO
9.99E-01
AVAILABLE
9.99E-01
UNAVAILABLE
4.80E-04
DC07
2
6.00E-05
No Release
No Release
DC08
BDBE
2.88E-08
No Release
No Release
N/A
1
2.00E-01
No Release
No Release
DC Handling System - 1m Horizontal Drop Initiated by LOSP
O:\SA-DEPT\503.03\CAFTA\DC07-08.ETA
9/16/98
Page 1

WELDING BURNTHROUGH	HVAC AVAILABILITY	Event #	Category	Frequency (per year)	Deterministic TEDE (rem)	Best Est. TEDE (rem)
Burnthrough DC Inner Lid at Welding Station (8 hr operation)	Probability that HVAC will be unavailable upon demand					
	AVAILABLE					
	9.99E-01	DC13	2	8.40E-04	2.6E-03	4.9E-04
8.40E-04	UNAVAILABLE					
	4.80E-04	DC14	BDBE	4.03E-07	1.9E+00	2.0E-01

DC Handling System - Welding Burnthrough of DC Inner Lid	O:\SA-DEPT\503.03\CAFTA\DC13-14.ETA	9/16/98	Page 1

5.0 Supporting Information

The fault tree developed for the welding burnthrough event is shown on Page V-12.

Pages V-13 through V-19 contain the preliminary design sketches provided by Surface Design for the DC Handling System. Information in these sketches was used to calculate the maximum drop heights for various design basis events evaluated in the DC Handling System.

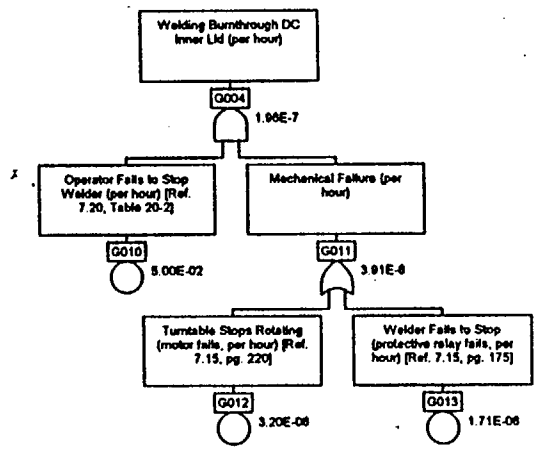

Welding Burnthrough of DC Inner Lid	C:\CAFTA-W\WELDER.CAF	9/4/98	Page 1

FIGURE 7.2-5
WP HORIZONTAL LIFTING MACHINE PD-HI-100

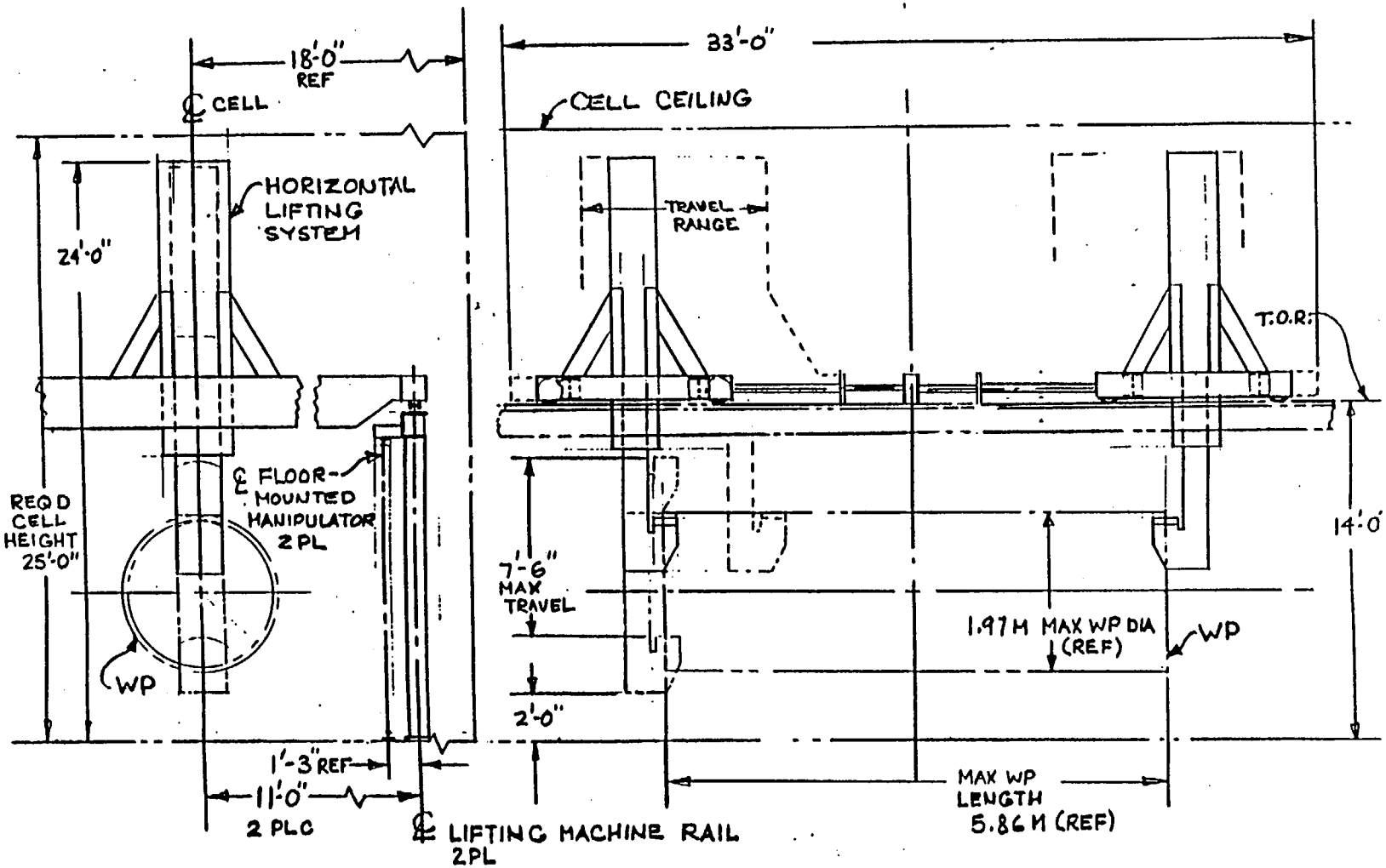

FIGURE 7.2-7
WP HORIZONTAL TRANSFER CART
PD-CR-100

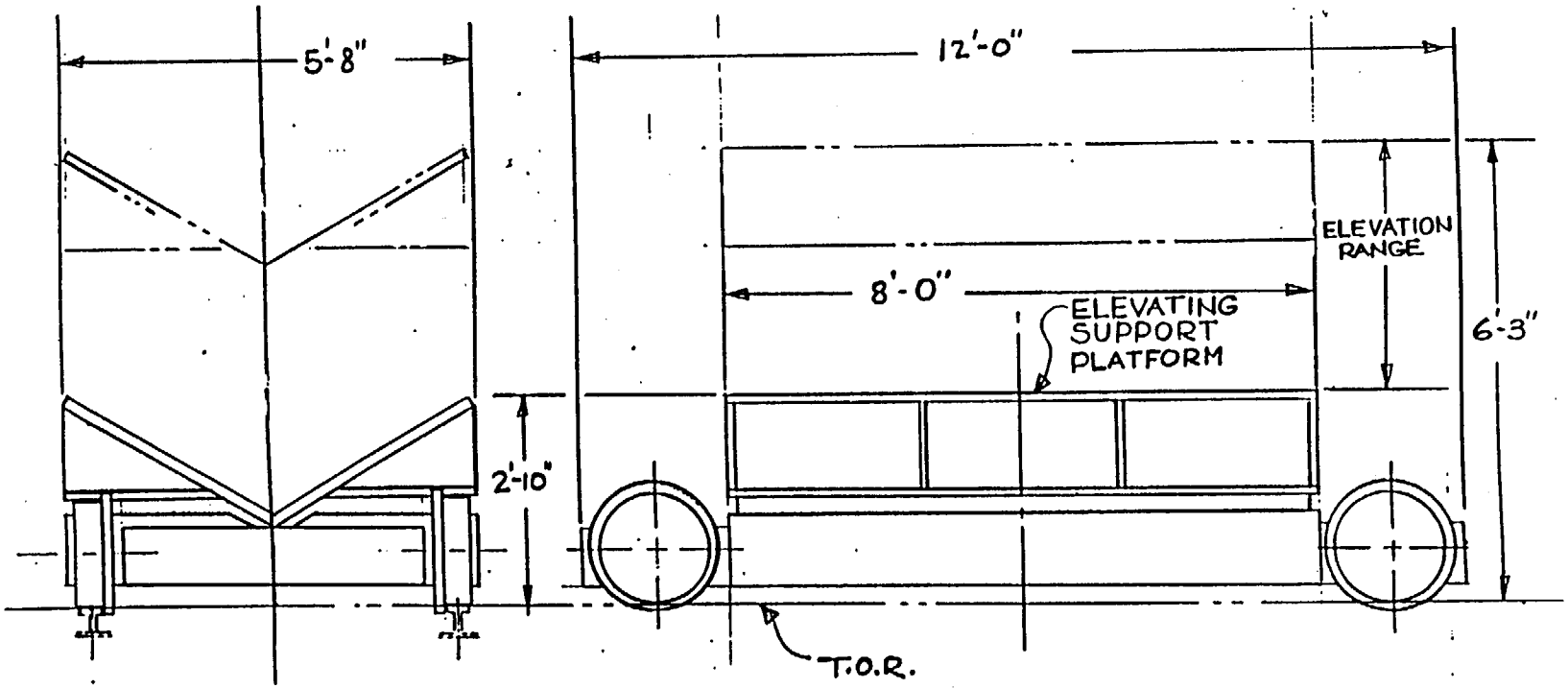

FIGURE 7.2-8
DC TRANSFER CART
PU-CR-111/112

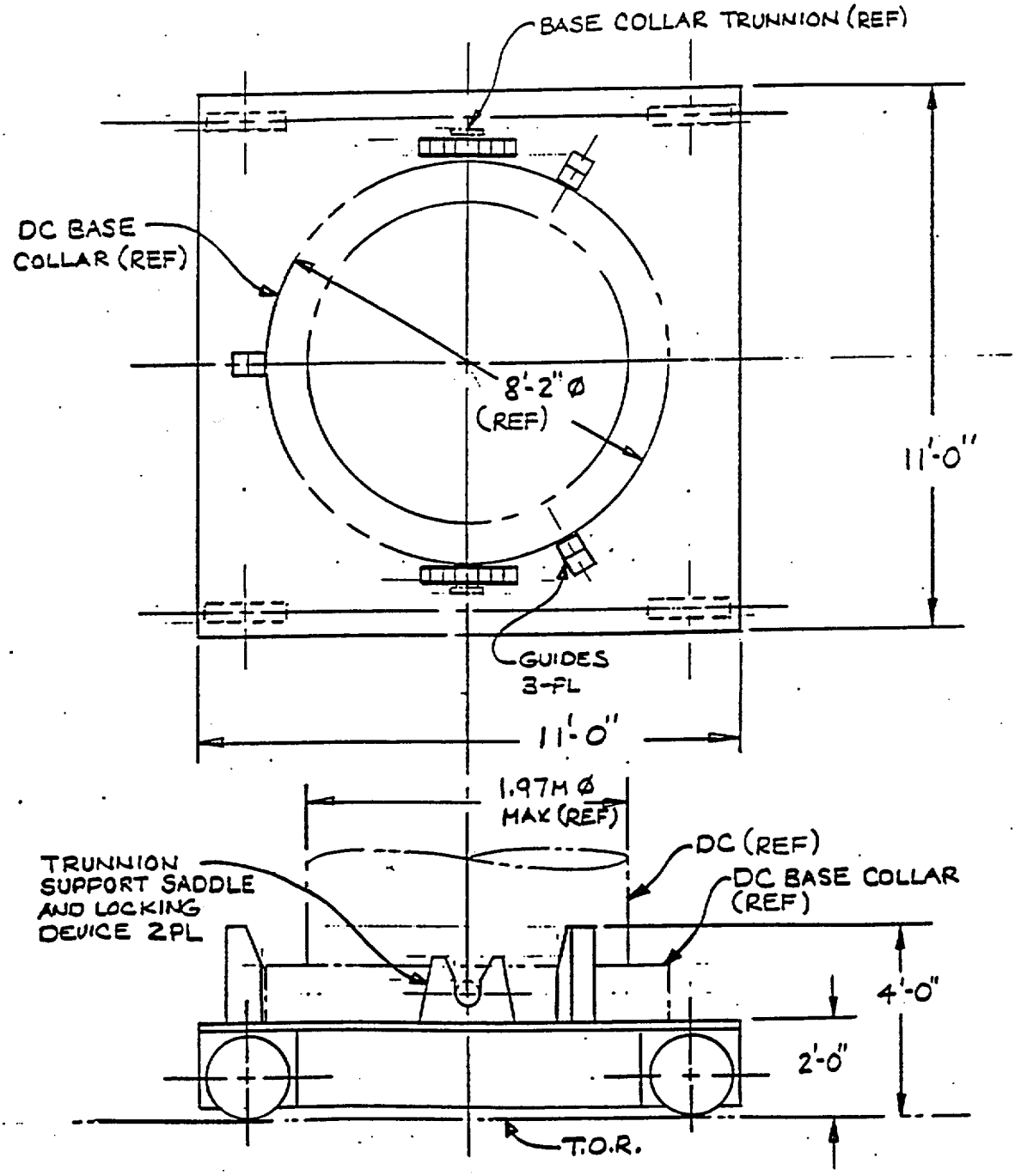

FIGURE 7.2-11 DC LIFTING YOKE PD-FX-100

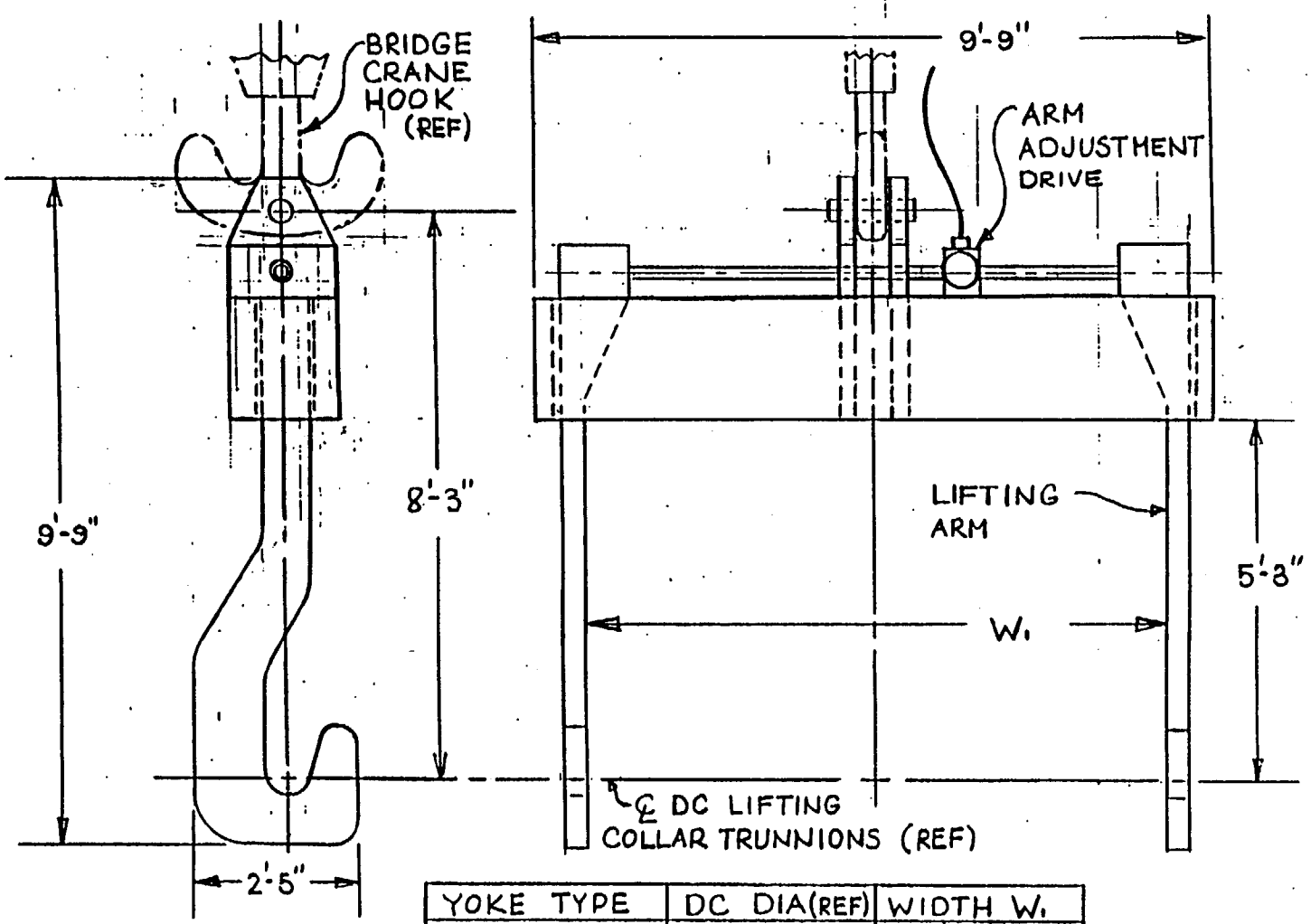

YOKE TYPE	DC DIA(REF)	WIDTH W1
1	1.95M/1.97M	8'-5"
2	1.6M/1.65M	7'-4"
3	1.27M/1.3M	6'-6"

FIGURE 7.2-12
DC STAGING FIXTURE
PD-FX-101

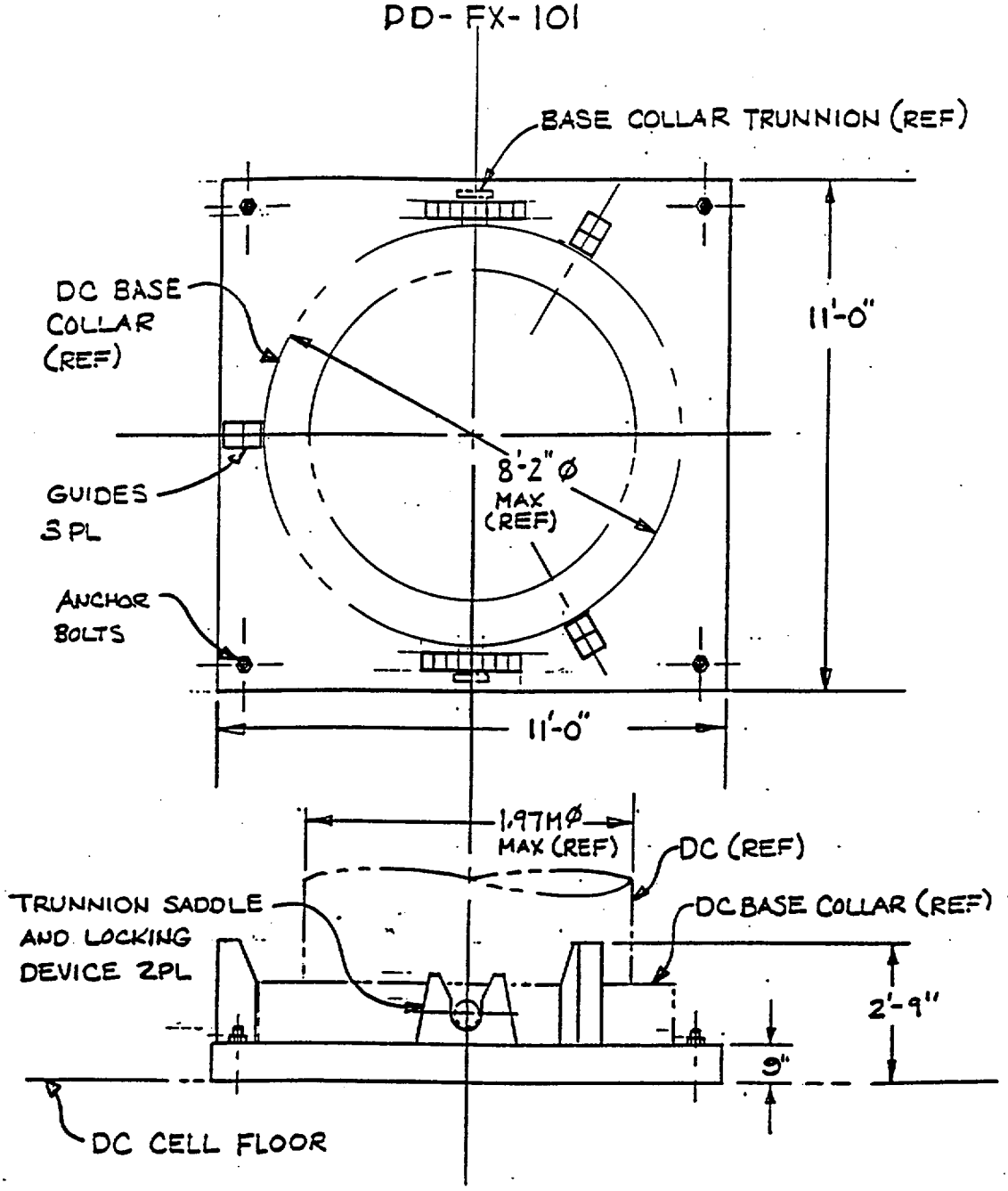

FIGURE 7.2-13
DC TILTING FIXTURE
PD-FX-103

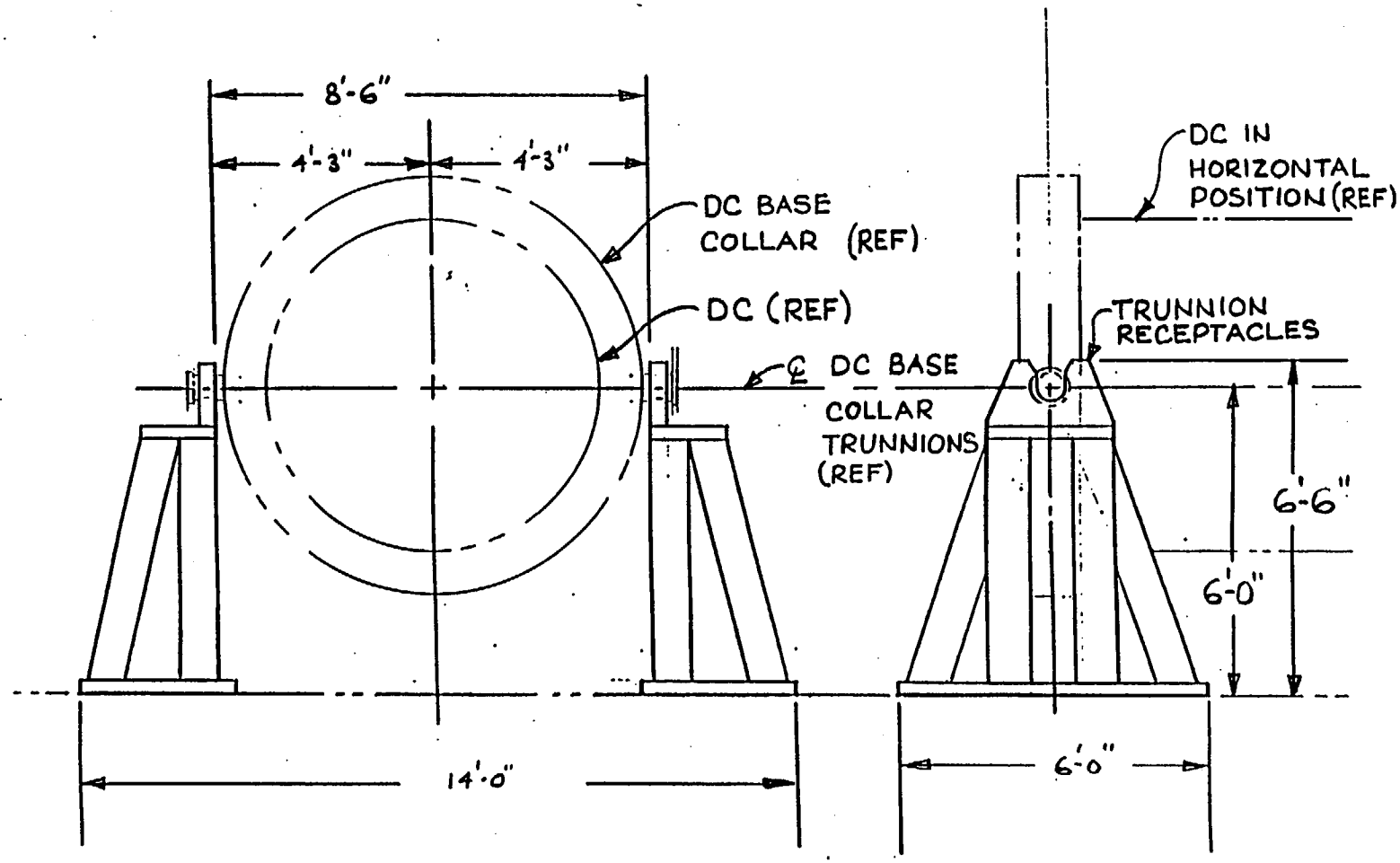

FIGURE 7.1-6
DC WELDING STATION TURNTABLE
PD-ME-102

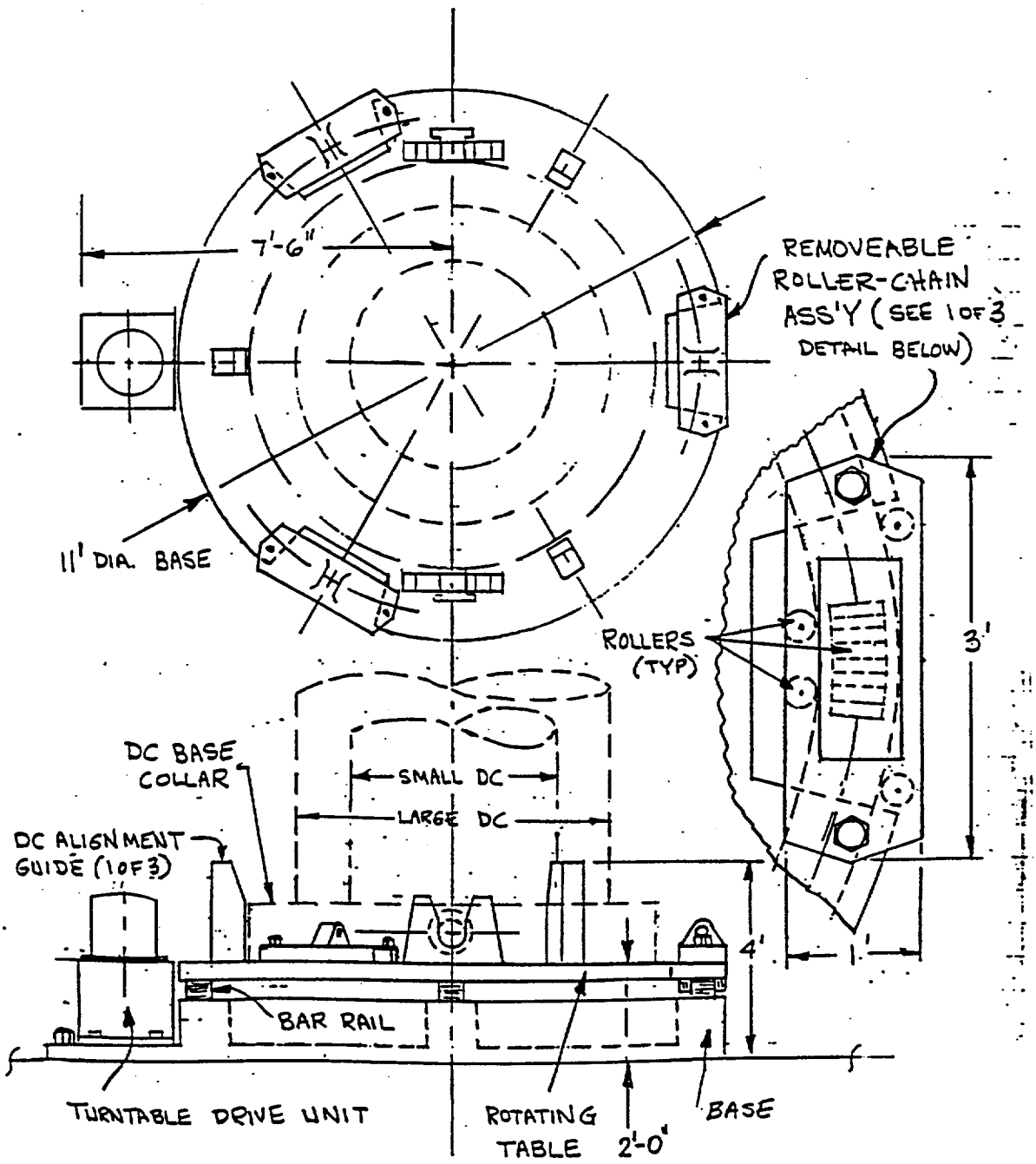

K. Schwartzfrauber 6-4-97

3/8" = 1'-0"

Attachment VI - Waste Emplacement System (SS17) and Subsurface Facility System (SS01) Calculations and Supporting Documentation

The data presented in this attachment was extracted from Reference 7.44, *DBE/Scenario Analysis for Pre-closure Repository Subsurface Facilities*. Table VI-1 is a grouping of the internal events analyzed in Reference 7.44 and Table VI-2 is a summary of the frequency analysis which was performed for internal events in the subsurface facilities.

The two events identified as bounding radiological events were the transporter runaway with WP (Event 5) and the Rockfall onto WP (Event 13A). Both events had a best estimate frequency of less than 1E-6/year; however, additional analyses or design changes are required to demonstrate that these events are beyond design basis.

Detailed event trees and fault trees for the subsurface internal events are contained in Reference 7.44. The radiological dose calculations for the two bounding radiological events were performed using a slightly different model than was used in Reference 7.44. The source terms, release fractions, and other assumptions required to perform the consequence analysis were as defined in Section 2.2 of this document. The results of the dose re-assessment are provided in Section 6.5 of this report. Additional details on the methodology and data used to perform dose calculations are presented in Attachment IX.

Table VI-1: Grouping of Internal Events for Subsurface Facilities[7]

Event No.	Event Description[1]	Location	Potential Consequences[5]	Radio-logical or Upset[2]	Subsection for Frequency Screening Analysis[6]
1	Transporter Derailment in Ramp or Main Drift	In Ramp or Main Drift during transporting WP into Main Drift	Full-speed derailment may have roll-over; but impact on WP less than Runaway consequences	R	7.2.5.5
2	Emplacement Gantry Derailment	In Emplacement Drift during Emplacement of Waste Package	Drop of WP onto another WP or pedestal; or slap of WP against gantry frame and/or wall	R	7.2.5.7.1; 7.2.5.7.2
3	Waste Package Reusable Car is Ejected out of Transporter	In Ramp or Main Drift during transporting WP into Main Drift	Potential drop of WP onto tracks, impact similar to Derailment	R	7.2.5.6
		In Turnout During Transport of WP to Emplacement Drift	Potential drop of WP onto tracks, impact similar to Derailment	R	7.2.5.6
4	Reusable Car Collision with Emplacement Gantry	In Emplacement Drift during Transfer of WP	Impact on WP if gantry in partially lowered position; jamming;	U	See Event No. 7, Consequence 2)
5	Runaway Transporter (with WP)	In Ramp or Main drift during transport of WP	1) Derailment, crash in to wall; potential worst case for single WP events. 2) Crash into ground support; initiate rockfall and/or trolley wire discharge and/or fire.[3]	1) R 2) R	1) 7.2.5.3 2) 7.2.5.3
		In Turnout During Transport of WP to Emplacement Drift	Equivalent to Derailment at full speed; see Event No. 1	R	7.2.5.5
6	Runaway Transporter (without WP)	In Ramp or Main Drift during return to Surface	Roll back down to collide with another transporter train; impact on WP similar to collision or derailment	R	7.2.5.4
7	Emplacement Gantry WP Lifting Mechanism Fails	In Emplacement Drift during Transfer of WP	1) Drop of WP onto another or onto a pedestal; 2) Unable to complete operation; stuck	1) R 2) U	1) 7.2.5.7.3
8	Transport Cask Internal off Loading Mechanism Fails	In Drift during Transfer of WP at Emplacement Drift	1) Unable to complete operation; similar to No. 7, consequence 2) 2) Spurious actuation, similar to No. 3	1) U 2) R	1) See Event No. 7, Consequence 2) 2) Combine with Event No. 3
9	Transport Cask Door Jams Waste Package	At WHB During transfer into Transporter	Not feasible due to geometry and design; lower edge of the door is below level of platform	N/A	None

Table VI-1: Grouping of Internal Events for Subsurface Facilities[7]

Event No.	Event Description[1]	Location	Potential Consequences[5]	Radio-logical or Upset[2]	Subsection for Frequency Screening Analysis[6]
		In Turnout/Emplacement Drift during Transfer of WP	Not feasible due to geometry and design; lower edge of the door is below level of platform	N/A	None
10	Rockfall/Ground Support Fall onto Transporter	In Ramp, Main Drift or Turnout during transporting WP	Impact/Breach of transporter car and WP	R	7.2.5.9
11	Rockfall/Ground Support onto Locomotive	In Ramp Drift during Transfer of WP at Emplacement Drift	1) Halt train. 2) Fall of trolley wire: initiation of electrical discharge and/or fire or missile; a potential threat to WP	1) U 2) R	1) None 2) 7.2.5.9
		In Turnout during Transport of WP or Transfer of WP	1) Halt train. 2) Fall of trolley wire: initiation of electrical discharge and/or fire or missile; a potential threat to WP	1) U 2) R	1) None 2) 7.2.5.9
12	Rockfall/Ground Support onto Gantry & Carrier During Relocation	In Main Drifts or Turnout	Halt relocation; no WP present	U	None
13	Rockfall/Ground Support Collapse onto Waste Package	In Emplacement Drift During Storage	Damage to WP, depending on mass falling on WP; may damage multiple WPs concurrently	R	7.2.5.8
14	Loss of Waste Package Cart Restraint in Sloped Emplacement Drift	In Ramp/drift during transporting WP into Main Drift	See Event No. 3	See Event No. 3	Combined with Event No. 3
		In Emplacement Drift during Emplacement of Waste Package into drift	Does not apply to reusable railcar concept	N/A	See Event No. 2
15	Fire/Explosion: from locomotive backup-power batteries; trolley supply rectifier alcove; power-supply cable; ingress of combustible fuels or vapors from development side	In Ramp or Main Drift during transporting WP	Unlikely but potential damage to transporter car and WP; if sufficient energy imparted to WP, release may exceed runaway scenario	R	None, deferred to future analysis
		In Emplacement Drift during Transfer of WP to Gantry	Unlikely but potential damage to transporter car and WP; if sufficient energy imparted to WP, release may exceed runaway scenario	R	None, deferred to future analysis

Table VI-1: Grouping of Internal Events for Subsurface Facilities[7]

Event No.	Event Description[1]	Location	Potential Consequences[5]	Radio-logical or Upset[2]	Subsection for Frequency Screening Analysis[6]
16	Thermal Cycling of Waste Package	In Emplacement Drift during Emplacement of WP or After Drift Closed	Induce crack growth in WP, depending on rapidity of temperature changes; open fissure for release of radionuclides (e.g., surface CRUD) but unlikely to cause damage to waste form	R	None [4]
17[3]	Thermal Cycling of Emplacement Drift Ground Support	In Emplacement Drift during Emplacement of WP or After Drift Closed	Induce deterioration of ground support strength; enable rockfall and/or lining fall; damage to multiple WPs	R	None, deferred to future analysis
18[3]	Loss of Subsurface Ventilation System	In Emplacement Drift, Turnout, and Main during Emplacement of WP or After Drift Closed	Backflow of radioactive air from emplacement drift; requires precondition of undetected leaking WP	U	None, qualitative screening per 7.2.5.2

Notes:

(1) Event descriptions are from the MGDS PHA (Ref. 7.10), but have been modified to reflect current conceptual design or events that were not considered in the PHA.
(2) Radiological issues, denoted by "R," mean that radionuclides may be released to the environment and to the public, but results of an accident also pose availability issues. Upset/Emergency Condition issues, denoted by "U" do not involve radionuclide releases but may pose radiological safety issues for personnel. "N/A" is not applicable to current design.
(3) Events added to PHA list.
(4) Analysis not in scope of Subsurface Design.
(5) Potential consequences are developed from References. 5.1, 5.13, 5.10, 5.11, and 5.25 of Reference 7.44, *DBE/Scenario Analysis for Preclosure Repository Subsurface Facilities*.
(6) Subsections listed are from Reference 7.44, *DBE/Scenario Analysis for Preclosure Repository Subsurface Facilities*.
(7) Modification of Table 7.2-7 from Reference 7.44.

Table VI-2: Summary of Frequency Analysis of Internal Events for Subsurface Facilities[7]

Event No.	Event Description[1]	Initiating Frequency, per year[5]	Release Scenario Frequency, per year[5]	Screening/ DBE Category for Release Scenarios[4]
1	Transporter Derailment in Ramp or Main Drift	6.7E-4 to 1.5E-2 BE: 3.2E-3	1E-7 to 3.4E-6 BE:7.3E-7[2]	BDBE[2]
2A	Emplacement Gantry Derailment - Normal Speed	7.2E-6	7.7E-9	BDBE
2B	Emplacement Gantry Derailment - Gantry Runaway	8.2E-5	< 1E-6	BDBE
3	Waste Package reusable car is ejected out of Transporter	3.3E-6 to 1.7E-4 BE: 1.7E-4	8E-9 to 1.8E-7 BE:3.8E-8	BDBE
5	Runaway Transporter (loaded train colliding with wall)	FT: 6.2E-5 to 1.2E-3 Act: 7.8E-5 to 4.7E-3 BE: 6.0E-4	5.4E-4[6] 2.6E-8 to 5.9E-7[6] BE:1.2E-7[2]	Category-2[6]
6	Runaway Transporter (empty returning train colliding with loaded train)	2.1E-6	1E-10 to 2.3E-9 BE:5E-10[2]	BDBE[2]
7	Emplacement Gantry WP Lifting Mechanism Fails	8.2E-3to 1.4E-3 BE:3.4E-3[2]	6.7E-8 to 8.6E-6 BE:7.6E-7[2]	BDBE[2]
10	Rockfall onto Transporter	1.6E-5 (whole train) 5.3E-6 (transporter)	< 5E-7	BDBE
11	Rockfall onto Locomotive	1.6E-5	< 1E-6	BDBE
13A	Rockfall and/or Ground Support Collapse onto Waste Package - Static Rockfall	2.7E-5 to 0.42 BE: 8.3E-4	1.4E-10 to3.4E-4 BE: 4.2E-8	Treat as Category-2 [2]
13B	Rockfall and/or Ground Support Collapse onto Waste Package - Seismic Induced, Beyond DB Earthquake[3]	< 1E-4 Beyond DBEQ	BE: 5E-9/yr	BDBE[3]
15	Fire/Explosion			Deferred to future analyses
16	Thermal Cycling of Waste Package			Deferred to future analyses; not in scope of Subsurface Design
17	Thermal Cycling of Emplacement Drift Ground Support			Deferred to future analyses

Notes:

(1) Event descriptions are from the MGDS PHA (Ref. 7.10); the particular initiators and event sequences analyzed in the present study have been modified to reflect concurrent conceptual design activities or events that were not considered in the PHA.
(2) Uncertainties in parameters used in analysis give a frequency range that extends into the credible range, however, the best estimate is BDBE. The best estimate was taken as the median value of the lognormally distributed frequency ranges. The best estimates for these events may not be shown in Table 7.2-16 of reference 7.44. A probabilistic key block analysis is planned to reduce the uncertainties.
(3) This event was included to be consistent with the presentation in Reference 7.23 even though the initiating event is noted to be BDBE.
(4) BDBE is Beyond Design Basis, indicating a sequence frequency < 1E-6/yr.
(5) "BE" is a best estimate; "FT" is a result of fault tree analysis; "Act" is based on actuarial data.
(6) The value of 5.4E-4 is based on assumption that impact of runaway is head on with an unyielding wall and thereby beyond the design basis of the waste package; however, design will ensure that the maximum feasible impact is within the design basis of the waste package, giving a frequency range that is less than 1 E-6/yr and therefore a BDBE. Further study is needed on this event to define the DBE.
(7) Modification of Table 7.2-16 from Reference 7.44, *DBE/Scenario Analysis for Preclosure Repository Subsurface Facilities.*

Attachment VII – Seismic DBE Analysis

1. Background & Purpose

The purpose of this attachment is to: 1) Document the methodology and regulatory basis for evaluating Design Basis Events (DBEs) initiated by Design Basis Earthquakes (DBEQs); 2) Present the radiological dose consequences of seismic-initiated DBEs postulated to occur at the Monitored Geologic Repository (MGR); 3) Address the Preclosure Safety Strategy (Ref. 7.42) and consider alternative design options; and 4) Assign design-specific seismic classifications (i.e., the frequency level of DBEQ to design to) for each system, structure and component (SSC) important-to-safety, based on the calculated dose consequences.

1.1 Design Basis Earthquakes – Frequency Categories

The methodology and criteria that the DOE and NRC have negotiated are presented in "Seismic Topical Report Number 2", *Preclosure Seismic Design Methodology for a Geologic Repository at Yucca Mountain* (Ref. 7.30). The topical report defines the following four categories of design basis earthquakes (DBEQs) and the frequency of excedance negotiated with the NRC:

Seismic Hazard	Frequency-Category-1	Frequency-Category-2
Vibratory Ground Motion	1×10^{-3} per year	1×10^{-4} per year
Fault Displacement	1×10^{-4} per year	1×10^{-5} per year

The Topical Report presents design approaches and acceptance criteria for the design of SSCs for vibratory ground motion in Sections 3.2 (surface facilities), 3.3 (underground openings), 3.4 underground SSCs), and 5.0 (waste package). Section 4 of the Topical Report addresses mitigation of fault displacement hazards for which the primary defense is fault avoidance. The approach and analyses described herein are primarily for classifying SSCs for surface and subsurface for vibratory ground motion DBEQs. However, the DBEQ classification assigned to a given SSC from the radiological analysis also applies to both the virbratory ground motion and the fault displacement considerations. Requirements for the SSCs of the surface and subsurface, other than ground openings, apply guidance and precedence from seismic design of other facilities licensed by the NRC, principally nuclear power plants. Fault avoidance

Section 2.1 of the Topical Report (Ref. 7.30) describes the linkage between the DBEQ frequency categories and the radiological dose limits for Design Basis Events (DBEs) specified in 10 CFR 60. It is clearly stated (page 2-2, Ref. 7.30) that "for Frequency-Category-1 DBEs, Section 60.111(a) invokes the limits of 10 CFR 20 ... for exposure of workers and members of the public..." The report quotes 10 CFR 20 as "0.1-rem total effective dose equivalent for the public" but does not add that this is the limit *per year*. For Frequency-Category-2 DBEs, the Topical Report notes that a 5-rem total effective dose equivalent limit would be applied to the public at the preclosure controlled area boundary.

The principal commitments for seismic design of Mined Geologic Repository (MGR) SSCs are presented in Section 3.2 of the Topical Report where it is stated (pg. 3-7, Ref. 7.30): "The DOE considers that specific criteria and guidance provided by NUREG-0800 (Ref. 7.62) are appropriate for use in surface-facility preclosure seismic design... With exceptions as noted..." Sections 3.7.1, 3.7.2, 3.7.3, and 3.7.10 of NUREG-0800 (Ref. 7.62) are noted to "provide appropriate acceptance criteria for the preclosure vibratory ground motion design of repository surface facilities that are important to safety" (Note, Section 3.4 of the Topical Report commits the subsurface SSCs to the same design approaches by reference to Section 3.2.). The primary exceptions to NUREG-0800 are those that refer to reactor-specific events that are not applicable to the MGR. A key exception, however, is the commitment that "references to Category-1 SSCs [in NUREG-0800] will be treated as "references to SSCs important to safety in accordance with the definition of this term in ... 10 CFR 60."

A more significant exception to NUREG-0800, however, is that the requirements of 10 CFR 100, Appendix A, do not apply. In particular, it is stated (Ref. 7.30, pg. 3-8) that requirements for the "operating basis earthquake and safe shutdown earthquake ground motions do not apply." Further, the Topical Report states that "repository SSCs that are important to safety will have a single design basis earthquake (Frequency-Category-1 or –2, as appropriate)." This commitment is addressed in this analysis. Addressing this commitment is important to the design of the SSCs because items that must withstand a Frequency-Category-2 DBEQ have to be designed to withstand higher earthquake loading (e.g., higher peak ground accelerations) than items which are only required to withstand a Frequency-Category-1 DBEQ.

1.2 Basis for Assigning DBEQs per Topical Report No. 2, Appendix B

The Topical Report's (Ref. 7.30) Appendix B, *Process for Identifying Structures, Systems, and Components Important to Radiological Safety* references QAP-2-3 for the procedure to classify SSCs as *Important to Radiological Safety* (QA-1). These SSCs include items:

- That are required to mitigate the consequences of a credible event that could result in a dose exceeding regulatory limits;
- Whose failure could initiate an event that could result in a dose exceeding regulatory limits; or
- That are required to monitor or control SSCs important to radiological safety.

To determine which SSCs meet any of these criteria requires: (1) an assumption that the function of the SSC in question is assumed to be lost or unavailable; (2) identification of credible initiating events and credible event scenarios that result in release of radionuclides; and (3) an assessment of the potential offsite and worker doses that could result. This is the general process that was applied to potential earthquake-initiated failures of SSCs.

Depending on whether the calculated potential dose exceeds the limits of 10 CFR 60.136 (for Category 2 DBEs, e.g., 5-rem TEDE), or only exceeds 10 CFR 20 (for Category 1 DBEs, e.g., 100 mrem per year public dose) given the loss of the SSC's function, the SSC is classified as having to withstand a Frequency-Category-2 or Frequency-Category-1 DBEQ, respectively. That is, the SSC must be able to maintain the function *important to radiological safety* during and following the DBEQ category assigned to it.

In addition, QAP-2-3 requires evaluation to determine if an SSC is *Important to Potential Interaction* (QA-5). The continued functioning of such SSCs is not required during or after an earthquake, but their failure or loss of function during an earthquake should not impair SSCs *important to radiological safety* (QA-1) or items *important to waste isolation* (QA-2) from performing their required functions. Thus, the appropriate DBEQ Frequency Category must also be applied to SSCs identified as *Important to Potential Interaction.*

This analysis applies the principles described herein but does not distinguish between QA-1 and QA-5 SSCs, *a priori*. Instead, radiological release scenarios were postulated based on evaluation of MGR operations and all potential ways in which a seismically induced failure of an SSC could cause damage to a waste form and lead to a release of radioactivity.

2. Approach to Implement Methodology of Seismic Topical Report No.2

This analysis uses "what-if?" earthquake scenarios and dose comparisons with 10 CFR 60 criteria to identify the seismic design criteria for SSCs. It does not imply that the SSCs in question will fail in an earthquake. Further, the estimated offsite doses are not intended to be used in a licensing submittal. The purpose of seismic design is to prevent or mitigate doses as necessary to meet regulations.

The analysis was carried out for potential event sequences that could be initiated by an earthquake of any magnitude, since the seismic design criteria are assumed not to be specified until after the need is established through analysis.

The analytic steps of the seismic strategy are the following:

1. For a given functional area, identify if radionuclides are present. If none, all SSCs can be categorized as non-seismic. (By this exercise, they could also be classified as *not important to safety and non-QA-1.*)

2. If radionuclides are present, define ways (scenarios) by which they could be released by events initiated by an earthquake. The postulated scenarios include failures of SSCs directly handling or storing waste forms and SSCs that could interact with those handling or storing waste forms.

3. Using conservative assumptions for source terms (e.g., those accepted by the NRC for dry-storage facilities), calculate the offsite dose that could result from each postulated failure of a given SSC and the resulting radiological release. Calculate doses with and without mitigation features, if mitigation is currently used in the design, or could be applied.

4. Subject each SSC to the following dose comparisons:
   a. If the individual offsite dose is greater than or equal to 10 CFR 60.136 limits, then the SSC must be designed to meet DBEQ Frequency-Category-2.
   b. If, however, the offsite dose is less than CFR 60.136 limits but greater than or equal to 10 CFR 20.1301 limits, or the associated worker doses exceed 10 CFR 20.1201, then the SSC must be designed to DBEQ Frequency-Category-1.
   c. If both the offsite doses and worker doses are less than the respective 10 CFR 20 limits, then the SSC may be designated as non-seismic, and designed accordingly (e.g., to Universal Building Code).

5. After classifying individual SSCs to seismic frequency categories, the sum of offsite doses from all seismically induced failures of SSCs designated as Frequency-Category-1 must be within the dose limits for Category 2 DBEs per 10 CFR 60.136. If not, then some or all of the SSCs that contribute to the excessive dose must be designed to Frequency-Category-2

6. For SSCs designated as Frequency-Category-1 or non-seismic based on radiological dose assessments, determine if the seismic failure of the SSC could create a potential criticality event. If so, design the SSC to a Frequency-Categfory-2 DBEQ.

7. For SSCs designated as Frequency-Category-1 or non-seismic based on radiological dose assessments, examine the SSCs and determine if there are any waste retrieval, or waste isolation issues that suggest designing to a more stringent category earthquake. If, after a cost analysis, it shows that with only a small increase in costs that it is reasonable to design an SSC to a more stringent category earthquake and the redesign results in a reduction in dose then this step should be taken to promote ALARA.

This process was applied to the reference VA design as a baseline. In addition, a discussion is provided in each section on the impact of applying the tenets of the Preclosure Safety Strategy, which was developed to provide a safety basis for designing the MGR (Ref. 7.42). This analysis also assesses alternative design concepts to support the applicable Preclosure Safety Strategy.

The dose assessments were conservative. Using guidance from NRC standard review plans for dry storage facilities, 100% of the waste form (i.e., 100% of SNF cladding) was assumed to breach in the event scenarios. The release fractions and source terms used in this seismic analysis are consistent with the conservative values described in Sections 2.2.2–2.2.8. The release of particulate radionuclides due

to impact pulverization of UO_2 or DHLW glass was taken as proportional to the energy imparted to the waste form using the PULF correlation described in Section 2.2.3. The source terms for the various DOE waste forms are under development and were not considered in this analysis. Once developed, the impact of the DOE waste forms on seismic classification will be evaluated.

Best-estimate source terms (i.e., based on mechanistic estimates of damage to waste forms and release fractions for radionuclides) were not applied in this analysis, but could be used in future dose assessments to quantify the safety margin or conservatism in assigning the DBEQ categories. Future changes to the design or refinements in the radiological source terms, release fractions or retention factors may also impact the DBEQ classification provided herein.

Potential criticality scenarios were not analyzed in detail in the present seismic classification study, but avoidance of potential criticality is recognized for storage racks in the fuel handling pools. Additional seismic criticality scenarios will be investigated if results of an ongoing internal-events criticality survey indicate that credible scenarios exist.

3. Assessment of Seismic Frequency Categories for SSCs

3.1 Surface Facilities

The approach described in Section 2 of this attachment was applied to each operation of the surface facilities to define which SSCs must withstand the respective category of vibratory ground motion DBEQ. The analyses are summarized in the following subsections.

3.1.1 Scoping Analysis: Consequences of Collapse of Waste Handling Building

The structures of the waste handling building, including that of the outer shell and those of the individual operations areas), have to be examined from two standpoints in the seismic radiological analysis. On one hand, SSCs with significant mass, such as walls, roofs, and foundations have potential for falling on, or impacting, a waste form and causing a release of radioactivity. On the other hand, some of the same structural elements may be required to provide a confinement of radioactivity that is released by the seismically induced failure of some other SSC, e.g., an SNF lifting device. This subsection addresses the first consideration to determine the appropriate DBEQ Frequency Category for the roof, walls, and foundations of each operational area (or cell) of the Waste Handling Building as required to *prevent* the creation of a radiological source term. It is noted that in the event of such structural failure, there is no way to mitigate the doses since any source term created inside the building will be free to enter the atmosphere.

Other sections of this attachment address the second consideration of the need for the building structures to provide a seismically designed confinement to mitigate releases due to seismic failures of other SSCs.

VA Design - In this analysis, the Waste Handling Building was assumed to be filled to maximum radionuclide inventory with PWR SNF (i.e., every handling and process station was assumed to be occupied by a single PWR assembly or a full 21-assembly waste package). The offsite dose was calculated assuming that an earthquake caused the roof of each operations area to fail so as to breach the waste form(s) contained within it. The source term in each operations area was proportional to the inventory of waste form impacted. The contribution of particulate release was calculated in proportion to the energy imparted by the roof mass of each operations area.

Table 7-1 presents the offsite doses that result from postulated seismic failures of the roof, walls, or foundations of each operational area of the waste handling building. All of the calculated doses (unmitigated) at 5 km exceed the Category 2 limits of 10 CFR 60.136 by factors of 5 to 500. Therefore, it is concluded that the roofs and supporting structures of all WHB operations areas must be designed to withstand a Frequency-Category-2 DBEQ.

The Waste Treatment Facility has not been analyzed for seismic events but is not expected to pose any significant DBE issues considering the fact that the facility will handle only low-level radioactive waste.

Preclosure Safety Strategy – No distinction can be made at this time. Regardless of changes in layout and operational concept, it appears that collapse of major portions of the building structure will be unacceptable due to the large inventory of radionuclides that may be present.

3.1.2 Receipt of Waste

This subsection describes the analysis of potential seismic-induced releases from transport casks while located between the transport rail/road entrance of the site to the exit of the Carrier Bay through the airlock into the Canister Transfer System or Assembly Transfer System.

Waste is received at the YMP site in transport casks via railcar or trucks. While en-route, transportation of radioactive wastes is governed by 10 CFR 71. The principal safety design criteria for transport casks, per 10 CFR 71, are to withstand the impact equivalent to a 9-m vertical drop, a normal drop of 0.3 m, and a drop of 1 m onto a soft iron bar. The qualification tests and structural analyses of such casks take credit for impact limiters that are attached to both ends of the cask. In addition, casks must withstand the drop of heavy loads onto the cask. The prescribed weight of the maximum object varies with the weight of the cask. At this time, there is no regulatory guidance or qualified analyses on the design limits for cask drops without impact limiters. Recently, however, the DOE provided responses to NRC questions concerning the CISF TSAR (see Attachment II) which indicated that transportation casks can withstand drops of approximately 2 m (80") without impact limiters. Therefore, it is assumed that the design basis drop height for casks without impact limiters is approximately 2 m (6 ft). Consequently, it was assumed that a drop from greater than 2 m would cause the cask and all fuel rods to be breached.

Transport casks are secured to transport carriers with hold-down devices that have to be removed prior to being handled at the Waste Handling Building. No seismic design criteria are available for these devices.

The dose analyses are similar to those performed for the internal event DBEs in Section 5.1 except that larger quantities of waste forms are assumed to be affected concurrently because an earthquake is a common-cause initiator. Random events affect a single transport cask. If two transport casks can be in a position where they could be breached concurrently during an earthquake, the resulting dose is twice that from the counterpart internal event. Table 7-2 summarizes the offsite dose calculations for various areas associated with waste receipt. It is noted that the assumed breach of a transport cask and breach of 100% of the fuel rods contained therein would result in an offsite dose greater than 5 rem. Since these doses exceed 10 CFR 60.136 limits, the breach of one or more transport casks must be prevented or mitigated by SSCs that withstand a Frequency-Category-2 DBEQ.

Table 7-3 provides a summary of the seismic classifications for SSCs associated with receipt of waste. The following subsections describe the analyses and conclusions for each of the regions affected by the waste receipt function.

3.1.2.1 Between Site Boundary and the Carrier Preparation Building

The primary containment is the transport cask which is licensed per 10 CFR 71 to withstand credible design basis events. The cask is protected by the impact limiters that prevent cask breach during credible transport accidents and are designed to withstand vertical and horizontal drops of at least 9 m and is attached to the carrier car by hold-down devices. Since the configuration of a cask and carrier car are not changed until reaching the Carrier Preparation Building, it is assumed that no release can occur even in the event of a Frequency-Category-2 earthquake.

3.1.2.2 In the Carrier Preparation Building; or Between the Carrier Preparation Building and the Carrier Bay

VA Design - The impact limiters are removed from a transport cask in the Carrier Preparation Building. The cask is the primary containment but without the impact limiters the cask is not expected to withstand a drop greater than about 2 m. Potential consequences of an earthquake include ejection of a cask from its carrier with a drop greater than 2 m, or impact on the cask by falling or colliding handling equipment. The crane in this facility is relatively light duty for removing impact limiters and personnel shields and does not lift transport casks. Therefore, neither the crane nor gantries should pose a threat to damage a transport cask should they fall onto it since the energy imparted by the falling masses of the handling equipment are within the design basis of transport casks (TBV). So long as this design constraint is met, there should be no releases from seismically induced falls or impacts from the handling equipment. If a cask could be breached and all fuel rods are breached, the offsite doses at 5 km are calculated to be greater than 5 rem (see Table 7-2), which exceeds the DBE Category 2 dose limits of 10 CFR 60.136. Such doses must be prevented or mitigated in a Frequency-Category-2 DBEQ.

The cask is then moved from the Carrier Preparation Building on the rail car or truck to the Carrier Bay of the Waste Handling Building. It must move over a bridge on its trip to the carrier bay building. During this period, it is potentially vulnerable to earthquakes via cask ejection from the carrier or the fall of the carrier and cask if the bridge collapses. The offsite doses for either scenario are essentially the same as for the Carrier Preparation Building and exceed the Category 2 DBEs. Therefore, such doses must be prevented or mitigated in a Frequency-Category-2 DBEQ. It is noted that the effective initiation frequency of a release scenario by bridge collapse could be reduced by multiplying the frequency of the earthquake by the fraction of time that a carrier is passing over the bridge. That analysis has not been included here.

Based on the dose analyses, bringing these portions of waste receipt operations into compliance requires that transport cars and holdown devices, the bridge, and rail and carrier roadways be designed to withstand the Frequency-Category-2 DBEQ to prevent a release. In addition, it must be demonstrated that any item that can cause breach of a cask by seismic-induced impact must be provided with mounting supports that withstand the Frequency-Category-2 DBEQ.

Alternative solutions include: not removing impact limiters until later operations; eliminating the intermediate Carrier Preparation Building altogether; maintaining the casks in a horizontal orientation (to eliminate slapdowns); requiring casks to be certified to withstand drops greater than 2 m without impact limiters; or extending the Exclusion Area Boundary to greater distances.

Preclosure Safety Strategy- Radiological safety for the Receipt of Waste function is achieved by the following proposed defenses:

- Primary: Containment with transport cask
- Secondary: Confinement via facility
- Defense-in-Depth: Prevent lifts exceeding design drop height

In the VA design, the transportation cask is also the primary containment. If it is deemed necessary to prevent a breach of that containment during a Frequency-Category-2 DBEQ, the requirements imposed for the VA design and alternative solutions still hold. As noted earlier, it is assumed that the cask structure will be designed to withstand the accelerations of Frequency-Category-2 DBEQ. The Carrier Preparation Building could be designed to provide "confinement via facility," but may not be warranted. A simpler solution might be to keep the impact limiters on the cask or to consolidate the Carrier Preparation Building functions into the Carrier Bay, thereby allowing the casks to be transported into the Carrier Bay with impact limiters intact. There are no cask lifts in this area, so defense-in-depth safety strategy does not apply here.

3.1.2.3 Carrier Bay Building

VA Design - The Carrier Bay is the area where transport casks are unloaded from railcars. Dual tracks enter the Carrier Bay. Two gantry-mounted manipulators, one on each track, remove the cask restraints. Two bridge cranes are available to upend and lift casks from carrier cars on either track, and transport them to the entrance of either the Canister Transfer System or the Assembly Transfer System where they are placed on a transfer cart. The Carrier Bay is housed in a steel-frame building that does not provide any confinement of radionuclides; the carrier car entrance and exit doors are not airlocks; and no filtered ventilation is provided. The casks are without impact limiters and are vulnerable to drops onto unyielding surfaces and sharp objects if the drop height exceeds the assumed 2 m design height.

Because the building structure is relatively light-duty, breach of a cask for impact from falling steel rafters or framing is judged unlikely because the energy of impact should be within the design bases of the transport cask. Similarly, the mass of the gantry manipulator is judged to be pose no threat to the cask from seismically induced impacts. Potential seismic-induced release scenarios in the Carrier Bay include:

- Handling equipment drops on cask (bridge crane)
- Uprighted cask slapdown onto carrier
- Cask drops to floor
- Cask drops onto transfer cart
- Slapdown from transfer cart

Table 7-2 presents the potential offsite doses for each scenario. Note that the dose varies with the height of drop or energy of impact assumed (see Section 2.2.3). In all but one case (i.e., manipulator falling onto cask), the potential doses exceed the Category 2 DBE dose limits of 10 CFR 60.136. Therefore, such doses must be prevented in a Frequency-Category-2 DBEQ by preserving the containment function of the cask, since the Carrier Bay provides no building confinement.

Based on dose calculations for the current VA design, the following equipment must be designed to withstand a Frequency-Category-2 DBEQ:

- Bridge crane rails, supports, and foundations
- Bridge crane lifting mechanisms and fittings; and control systems
- Transfer cart, including built-in restraints to prevent cask slapdown; this includes the control and drive systems to prevent collisions with the exterior of the airlock door (see subsection 3.1.3.1) or uncontrolled motion leading to fall from the transfer dock

Alternative solutions include: not removing impact limiters until later operations; maintaining the casks in a horizontal orientation (to eliminate slapdowns); requiring casks to be certified to withstand drops greater than 2 m without impact limiters; or extending the Exclusion Area Boundary to greater distances.

Preclosure Safety Strategy - Radiological safety for the Receipt of Waste function is achieved by the following proposed defenses:

- Primary: Containment with transport cask
- Secondary: Confinement via facility
- Defense-in-Depth: Prevent lifts exceeding design drop height

Like the VA design, the Preclosure Safety Strategy relies on the transportation cask as the primary containment. If it is deemed necessary to prevent a breach of that containment during a Frequency-Category-2 DBEQ by impact from interactions with other SSCs, the seismic design requirements for the VA design would still be valid. As noted previously, it is assumed that the transportation cask will also be designed to withstand the accelerations of a Frequency-Category-2 DBEQ.

If the Carrier Bay area is designed to provide "confinement via facility" and HEPA filters are available to remove radioactive particulates, the potential offsite doses are reduced by several orders of magnitude, as shown in Table 7-2, and are well below the limit for Category 2 DBEs. If the cask structure, the building, and its HEPA-filtered ventilation system are designed to withstand a Frequency-Category-2 DBEQ, it can be argued that the bridge crane (rails, supports, and control system) and transport carts can be designed to Frequency-Category-1. Given that a seismic-induced breach of a cask occurs at a frequency of 10^{-3} per year and assuming an HVAC unavailability of 4.8E-4 (see Attachment VIII), the frequency of a release exceeding 5 rem at the site boundary is below the threshold for credible DBEs. Furthermore, adopting the defense-in-depth provision, so that seismic-induced drops cannot breach the cask, would allow the lifting mechanisms, fittings, and controls of the cranes to be classified as non-seismic and designed to UBC.

Table 7-3 summarizes the recommended seismic classification of the Waste Receipt SSCs for the VA design, an alternative design, and the Preclosure Safety Strategy.

3.1.3 Assembly Transfer System

The Assembly Transfer System receives and unloads transport casks containing commercial spent nuclear fuel assemblies. Note: The Canister Transfer System, described in Section 3.1.4, receives and unloads Defense High-Level Waste (DHLW) canisters and canistered spent fuel from commercial, DOE and Navy facilities. The Assembly Transfer System has three parallel and independent operations; each comprised of several stations that are described in the following subsections.

Table 7-4 presents the dose calculations for assumed seismic-initiated events in the Assembly Transfer System. Table 7-5 summarizes the seismic classification of SSCs of the Assembly Transfer System for two alternative design strategies: Mitigation and Prevention. For the containment strategy, credit is taken for the building confinement and HEPA filtration system to mitigate potential radiological releases. In this case, the building (i.e., roof and walls) and the HVAC system are assumed to be seismically designed to withstand a Frequency-Category-2 DBEQ. For the prevention strategy, it is assumed that seismic-initiated events which have the potential to exceed the regulatory dose limits are prevented by designing the appropriate SSCs to withstand a Frequency-Category-2 DBEQ. In the latter case, no credit is taken for mitigating features (e.g., HEPA filters) and the emphasis is on preventing any radiological releases from occurring.

The following subsections describe the basis for these seismic classifications.

3.1.3.1 Airlock

VA Design – This area provides the interface between the Carrier Bay (non-confinement) and the confinement portions of the Waste Handling Building. The cask is vertically oriented on a powered transfer cart. Other than the potential release due to roof collapses discussed in Section 3.1.1, other potential seismic release scenarios include:

- Failure of the transfer cart resulting in a drop or slapdown of a cask beyond its design basis (assumed to be > 2 m onto an unyielding surface)
- Uncontrolled or unconstrained motion of the cart resulting in a collision with the walls or airlock doors

The unmitigated dose at 5 km for either of these scenarios, assumed to occur simultaneously in all three airlocks, is shown in Table 7-4 to be greater than 5 rem. No distinction is made for the release from canistered versus uncanistered spent fuel assemblies. Since these doses exceed the limits for Category 2 DBEs of 10 CFR 60.136, the doses must be prevented or mitigated by SSCs that withstand a Frequency-Category-2 DBEQ.

Options to bring this area into compliance include the following:

- Classify the transfer cart and associated controls and motive systems as Frequency-Category-2 (the transfer cart may also be classified as FC-2 due to the Carrier Bay seismic scenarios)

- Alternatively, if it is decided to design the SSCs of the airlock to withstand a Frequency-Category-2 to provide confinement for Category 2 seismic releases scenarios in other parts of the Waste Handling Building, then the mitigated dose for collision of the cask transfer cart (shown in Table 7-4) would be reduced to below the 10 CFR 20 limit of 0.1 rem (per year), and the transfer cart would be designed to withstand a Frequency-Catgory-1 DBEQ, or UBC.

Preclosure Safety Strategy – The Airlock is the transition between the functions *Receipt of Waste* and *Transfer of Waste to Waste Package*. Since the lids and seals of the transport casks are still in place, this area may be considered as bound to the *Receipt of Waste* portion of the Preclosure Safety Strategy, which prescribes the following safety features:

- Primary: Containment with transport cask
- Secondary: Confinement via facility
- Defense-in-Depth: Prevent lifts exceeding design drop height

The Preclosure Safety Strategy and the VA case are similar in that the transport cask provides primary containment and the building provides secondary confinement. As noted previously, it is assumed the cask structure will be designed to withstand the accelerations of a Frequency-Category-2 DBEQ. It will be necessary to prevent a breach of cask containment during a Frequency-Category-2 DBEQ by impact from interactions with other SSCs. Given the prevention strategy for *Receipt of Waste*, confinement would not be required, except as secondary defense but would have to be Frequency-Category-2 to assure dose limits are met at the lower frequency earthquake. To provide defense-in-depth provisions, an alternative means of transferring casks would have to be developed so that energetic slapdowns and collisions are not physically possible.

3.1.3.2 Cask Preparation and Decontamination

VA Design – This operations area is the first stop in the process of transferring spent nuclear fuel assemblies from transport casks. Transport casks are brought into the area on the transfer cart from an Airlock. The area is isolated from the Airlock by the inner isolation door of the Airlock.

The cask is lifted from the transfer cart by a bridge crane and lowered into a pit where the top lid bolts are de-tensioned and removed, and the outer lid is removed. Hoses are connected to sample, vent, purge, and cool the cask. The operations also include filling the cask with water. The lifting yoke is re-attached. After these operations, the cask is lifted from the pit and moved by the bridge crane over the assembly transfer pool and lowered into the water.

Potential seismic release scenarios have been identified as follows:

- Drops or slapdowns of cask from the transfer cart greater than 2 m, or impacts with structures due to a uncontrolled motion of the transfer cart (as in the Carrier Bay and Airlock)
- Dropping of the cask to the deck or to the bottom of the pit
- Impact to the cask by a falling crane
- Impact to cask and walls due to uncontrolled bridge crane motion

The mass of decontamination and preparation equipment is judged too small to cause a breach of cask confinement if they were to fall onto the cask.

The seismic requirements and options for the transfer casks are the same as for the Airlock. Table 7-4 presents the calculated doses at 5 km for the drop of the cask into the pit. The unmitigated dose exceeds the Category 2 DBE limits; therefore, the event must be prevented or mitigated by SSCs that withstand a Frequency-Category-2 DBEQ. The mitigated dose is less than the 10 CFR 20 dose of 0.1 rem (per year). The consequences of a crane falling onto a cask and breaching it would be equal to or greater than a breach due to a cask drop into the pit. The difference in doses depend on the amount of particulates generated by the impact of the crane falling onto a cask or a cask dropping into the pit, respectively. The consequences of an uncontrolled crane motion initiated by an earthquake could result in a collision with a wall with or without a consequential drop of the cask. Dose consequences of such events are expected to be comparable to the drop. Therefore, controls for the crane must be earthquake proof to prevent a drop into the pit or an uncontrolled movement.

Options for seismic classification include the following:

- Option for the transfer carts are the same as for the Airlock (see Subsection 3.1.3.1).
- Prevention of cask drop into the pit requires the bridge crane lifting mechanisms, rails, supports, and controls to withstand a Frequency-Category-2 DBEQ; these design criteria would also prevent fall of the crane onto the cask.
- If the building is designed to provide a confinement and its SSCs and filtered ventilation are designed to withstand a Frequency-Category-2 DBEQ, the bridge crane and associated controls could be designed to withstand a Frequency-Category-1 DBEQ (or perhaps to UBC).

One design alternative that could prevent releases by cask drops is to provide impact limiters at the bottom of the pit or pool and on the pool deck where transfers are made.

Preclosure Safety Strategy – Since the functions of this operations area are to alter the confinement boundary and internal atmosphere of transport casks, it is subject to the design philosophies of *the Transfer of Waste to Waste Package*. Two cases are considered - *Bare Fuel: Confinement Augmented by Prevention*; and *Canistered Fuel: Prevention Augmented by Confinement*. The safety features prescribed for the *Bare Fuel* case are:

- Primary: Confinement by Pool/Hot Cell or Hot Cell
- Secondary: Confinement by Facility
- Defense-in-Depth: Prevent Dropping Bare Assemblies

If the Cask Preparation and Decontamination functions are performed within a hot cell, the SSCs of the hot cell and its filtered ventilation system and other mitigation features (e.g., gas holdup tanks) have to be classified as Frequency-Category-2. This precludes offsite doses in excess of the Category 2 DBE dose limits given the occurrence of a Frequency-Category-2 DBEQ. As in the case of the VA design, the operating equipment contained therein could be designed to withstand a Frequency-Category-1 (or perhaps to UBC). The Confinement *by Facility* feature is not required except as secondary defense, but would have to be Frequency-Category-2 to assure dose limits are met at the lower frequency earthquake.. *Prevent Dropping of Bare Assemblies* is not relevant to this operation due to the large number of assemblies which must be handled by the facility.

The safety features prescribed for the *Canistered Fuel* case are:

- Primary: Prevent Lifts of Canister Beyond Design Heights
- Secondary: Prevent Dropping Canisters
- Defense-in-Depth: Confinement by Facility

Since the Cask Preparation and Decontamination operations do not involve removal of canisters from the transport casks, this portion of the Preclosure Safety Strategy is not relevant to this cell.

3.1.3.3 Cask Unloading Pool

VA Design - A transport cask is lowered into the pool with the same bridge crane used in the Cask Preparation and Decontamination area. Underwater, the lid is removed from the cask, and the bare spent nuclear fuel assemblies or Dual Purpose Canisters (DPCs) are exposed. DPCs, in turn, are cut open to expose fuel assemblies. A Wet Assembly Transfer Machine removes one fuel assembly at a time and transports it to a fuel storage rack in the pool. The pool water provides radiological shielding and confinement of particulate radionuclides that are released into the water from the normal operations of handling assemblies with cladding defects and surface crud as well as radionuclides that are released in DBE situations. In addition, in the VA Design, the pool water provides an air seal between the wet and dry operations of the Assembly Transfer System. Therefore, potential seismic radiological events include scenarios in which the pool water remains intact or pool water is lost. The offsite dose consequences are investigated for both cases.

In the bounding scenario, a seismic event is postulated which may cause the pool to lose its water (this could be caused by a failure of the pool structure, its fill/drain systems, or by impact due to a falling crane or tipover of a transport cask), and cause breach of all fuel rods in the pool including those in the storage racks and in the opened casks. In addition, any radionuclides that might be released in the Assembly Handling Cell (see Section 3.1.3.6) would be free to leave that cell. No explicit offsite doses were calculated since it is clear from the doses calculated for the breach of a single transport cask that Category 2 DBE limits would be exceeded. Therefore, SSCs required to prevent a loss of pool water scenario must withstand a Frequency-Category 2 DBEQ. In addition, interactive portions of the pool fill/drain systems and other rooms or piping that could result in loss of pool water in an earthquake must withstand the same level of earthquake as the pool.

The fuel storage racks should be designed to withstand a Frequency-Category-2 DBEQ to preclude potential criticality due to disruption of the storage racks as well as potential breaches of fuel assemblies that could fall to the pool floor.

As shown in Table 7-4, with the pool water intact, the mitigated and unmitigated offsite doses at the 5 km site boundary from a cask breach are only 0.008 rem (PWR) or 0.007 (BWR). The mitigated and unmitigated doses are the same because of the assumption that the pool water mitigates 100% of the particulate release from a cask breach in the pool. By this analysis, the portions of the crane lifting mechanisms, their control systems, and cask restraints could be designed to withstand a Frequency-Category-1 DBEQ since any release created by their failure in an earthquake is within the offsite limit of 10 CFR 20 (i.e., 0.1 rem per year).

However, if the bridge crane and other SSCs that could fall in an earthquake are shown to have sufficient mass and potential energy to pose a threat to the integrity of the pool structure, or to maintaining the water seal to other portions of the Assembly Transfer System, the supports and restraints of such SSCs will have to withstand a Frequency-Category-2 DBEQ.

Preclosure Safety Strategy - The Preclosure Safety Strategy for the function *Transfer of Waste to Waste Package – Bare Fuels* considers the following features to achieve the required safety:

- Primary: Confinement by Pool/Hot Cell

- Secondary: Confinement by Facility
- Defense-in-Depth: Prevent Dropping Bare Assemblies

The VA design follows these precepts so the seismic classification is the same.

3.1.3.4 Cross-Line Transfer Canal

VA Design - This portion of the pool permits the movement of loaded or empty assembly baskets between cask unloading lines. A basket is loaded onto an underwater transfer cart and moved to the pool segment of another line. A potential seismic event is the drop of a loaded basket onto the pool floor or onto other baskets due to a failure in the mechanical or control portions of the wet assembly transfer machine and the transfer cart. With the pool water present, the offsite dose shown in Table 7-4 is well within the 10 CFR 20 dose limits for Category 1 DBEs. If the pool is designed to withstand a Frequency-Category-2 DBEQ, the SSCs associated with the Cross-Line Transfer Canal can be designed to withstand a Frequency-Category-1 DBEQ, or UBC based solely on offsite dose consequences.

Preclosure Safety Strategy - The Preclosure Safety Strategy for the function *Transfer of Waste to Waste Package – Bare Fuels* considers the following features to achieve the required safety:

- Primary: Confinement by Pool/Hot Cell
- Secondary: Confinement by Facility
- Defense-in-Depth: Prevent Dropping Bare Assemblies

The VA design follows these precepts so the seismic classification is the same.

3.1.3.5 Assembly Staging Pool

VA Design - In this region of the pool, assembly baskets are moved from the staging rack to the incline transfer canal cart which carries the assembly baskets up the incline, out of the water, and into the Assembly Handling Cell (discussed in the following paragraphs). Potential seismic events underwater include dropping a loaded basket onto the pool floor or onto other baskets due to a failure in the mechanical or control portions of the wet assembly transfer machine or the incline transfer cart. These are similar to those of the transfer canal except there could be more baskets that are full and more fuel assemblies involved. With the pool water present, the offsite dose shown in Table 7-4 is 0.002 rem (PWR or BWR). This is well within the 10 CFR 20 dose limits for Category 1 DBEs. If the pool is designed to withstand a Frequency-Category-2 DBEQ, the SSCs associated with the Assembly Staging Pool can be designed to withstand a Frequency-Category-1 DBEQ, or UBC based solely on offsite dose consequences.

Preclosure Safety Strategy - The Preclosure Safety Strategy considers the following features to achieve the required safety.

- Primary: Confinement by Pool/Hot Cell
- Secondary: Confinement by Facility
- Defense-in-Depth: Prevent Dropping Bare Assemblies

The VA design follows these precepts so the seismic classification is the same.

3.1.3.6 Assembly Handling Cell

VA Design - The incline transfer canal cart brings the fuel basket up out of the pool water into the dry confines of this cell. Each basket holds 4 PWR or 8 BWR fuel assemblies. A dry assembly transfer machine picks up a basket and moves it over a dryer station and lowers the basket into the dryer, which is located in a pit. Each of the three Assembly Handling Cells will have two or more drying stations, each of which dries several baskets in a batch operation. After drying, a dry assembly transfer machine picks

up one fuel assembly at a time and lowers it into a disposal container (DC) which is on a transfer cart. When the DC is full, an inner lid sealing device is installed on the DC. The cart is moved a short distance into a decontamination area. The assembly handling cell is designed as a shielded hot cell to protect operating personnel from direct radiation and from normal and unintentional releases of airborne radiation.

Potential seismic events include: (1) drops of baskets or individual assemblies onto the floor, into the dryer, or onto other fuel assemblies in the DC; and (2) impact on individual or multiple fuel assemblies by falling equipment. The dose at 5 km was calculated for a representative assembly basket drop onto another assembly basket, resulting in the breach of all fuel rods (either 24 PWR or 48 BWR assemblies). Table 7-4 presents the dose for (1) the mitigated case, with credit for the filtered ventilation system; and (2) a hypothetical unmitigated case to illustrate the need for the confinement afforded by the hot cell. The unmitigated dose in Table 7-4 exceeds the dose limits for Category 2 DBEs. This confirms that mitigation provided by confinement is necessary. Further, the SSCs associated with the confinement and the filtered ventilation have to withstand a Frequency-Category-2 DBEQ. The mitigated dose is 0.007 rem (PWR) or 0.016 rem (BWR), which is within the dose limits for Category-1 DBEs. If credit is taken for mitigation of potential radiological releases by the hot cell, the SSCs associated with the assembly handling and drying operations could be designed to withstand a Frequency-Category-1 DBEQ, or UBC based solely on offsite dose consequences.

Preclosure Safety Strategy - The operations described in the previous paragraphs bridge two of the Preclosure Safety Strategy areas. The first is *Transfer of Waste to Waste Package*. The Preclosure Safety Strategy for this function is primary confinement by the hot cell, secondary confinement by the facility, and the defense-in-depth safety feature is to prevent dropping the fuel assemblies. The VA case uses the primary and secondary features of the Preclosure Safety Strategy. Placing assemblies into a DC will always pose some risk of dropping an assembly so it does not appear feasible to implement the proposed defense-in-depth feature in the design. However, the seismic classification of the dry assembly transfer machine can be designed to withstand a Frequency-Category-2 DBEQ to provide the defense-in-depth for earthquake scenarios.

The back-end of this operation is part of the function identified as *Packaging/Sealing of Waste Package - Before Sealing*. The Preclosure Safety Strategy for this function includes the primary safety feature of confinement by the hot cell, the secondary is confinement by the facility surrounding the hot cell, and the defense-in-depth is to prevent lifting or tipping of loaded, unsealed DCs. The VA case is compatible with the Preclosure Safety Strategy in this process area.

3.1.4 Canister Transfer System

VA Design - The canister transfer system provides for the transfer of the DHLW, DOE SNF, and Navy fuel among others. These wastes are contained in sealed canisters which are not opened. For example, the DHLW consists of vitrified glass inside a sealed metal canister, five of which are placed inside a transportation cask. Unloading and packaging operations are performed in a dry cell for these waste forms.

Two independent and parallel operational paths are provided. In each path, transport casks are carried upright on a transfer cart from the Carrier Bay, through a corridor, through an Air Lock cell, and into a Cask Preparation cell. Cask preparation includes detensioning and removal of bolts from the transport cask, sampling, venting, purging, and decontamination. After preparation, a cask is transported on the same transfer cart into the Canister Staging cell where the lid is removed and canisters are lifted out of the transportation cask by a bridge crane. Large canisters are moved in a single operation from the transportation cask to a DC waiting in the Canister Transfer cell. Smaller canisters, such as DHLW, may be moved in a first lift to a DC, or to a storage rack and later moved in a second lift to a DC. Each of the storage racks in the respective staging cells could hold up to 20 canisters.

Potential radiation releases by seismic events consider the following:

- Canisters for the DHLW are assumed to survive a drop height of approximately 7 m
- It is assumed that acceptance criteria will require that canisters for the other wastes also withstand a drop of 7 m
- Based on the drop height strength, canisters are unlikely to be breached in a slapdown of a transportation cask or unsealed DC
- The bridge crane appears to be sufficiently massive that a fall onto a canister or storage rack is likely to cause a breach of the canister confinement; dose calculations were performed to assess the potential consequences
- Dose calculations for canistered waste other than DHLW glass will be performed in future analyses

The unmitigated doses at 5 km resulting from potential canister impact and breach by a crane fall are similar to the postulated roof collapse shown in Table 7-1. This event exceeds the dose limits for Category 2 DBEs and must be mitigated or prevented by SSCs that withstand a Frequency-Category-2 DBEQ. With mitigation by the hot cell (i.e., building confinement and HEPA filtration), the doses are reduced to .005 rem and .032 rem for 10 DHLW canisters in the cask preparation or decontamination areas and 40 canisters in the storage racks, respectively, which are within the dose limits for Category 1 DBEs. Therefore, the bridge crane rails and supports need only withstand a Frequency-Category-1 DBEQ. The lifting mechanisms and controls for the crane should also be designed to withstand a Frequency-Category-1 DBEQ to ensure that an earthquake cannot induce a lift and drop beyond 7 m, or initiate an uncontrolled motion that could result in a canister impact with a wall or other canisters.

Table 7-6 summarizes the seismic classifications of the SSCs of the Canister Transfer System based on the reference VA design.

The seismic classification for the Canister Transfer System must be assessed further for potential consequences associated with DOE and Navy fuel.

Preclosure Safety Strategy - The operations described above bridge three functions of the Preclosure Safety Strategy: *Receipt of Waste*, *Transfer of Waste to Waste Package*, and *Packaging/Sealing of Waste Package - Before Sealing.* The *Receipt of Waste* credits containment by the transport cask as the primary defense, so the casks must be able to withstand a Frequency-Category-2 DBEQ and the movement of casks outside the hot cell area must be designed to prevent breach of the cask due to a Frequency-Category-2 DBEQ.

Transfer of Waste to Waste Package will be performed inside a hot cell. Radioactive releases as a result of DBEs are then prevented by preventing canisters from being lifted above their design height and not dropping canisters. Potential releases initiated by an earthquake can take credit for the mitigation provided by the hot cell (designed to withstand a Frequncy-Category-2 DBEQ). As for other operations, it is expected that the mitigated doses at 5 km will be within the dose limits for Category 1 DBEs, and SSCs associated with removing canisters and moving them to DCs can be designed to withstand a Frequency-Category-1 DBEQ, or UBC based solely on dose consequences.

Packaging/Sealing of Waste Package - Before Sealing will also be performed inside a hot cell, so any unintentional releases caused by an earthquake will be mitigated. The primary defense is to avoid lifting and tipping of the unsealed, loaded DC. Since the mitigated doses are expected to be within the dose limits for Category 1 DBEs, the SSCs associated with moving, supporting, and installing lids on a disposal canister can be designed to withstand a Frequency-Category-1 DBEQ, or UBC based solely on dose consequences.

3.1.5 Disposal Container Handling System

VA Design - The purpose of the DC Handling System (DCHS) is to prepare empty DCs for loading, transfer DCs to and from the Assembly and Canister Transfer Systems, weld the inner and outer lids, temporarily store loaded DCs before or after welding (as needed), tilt DCs to horizontal, and load DCs onto the waste emplacement transporter. The system also transfers DCs to the Waste Package Remediation System as needed.

The primary DCHS equipment includes a DC bridge crane with lifting fixtures, a tilting station fixture, transfer carts, DC welding/inspection robots, welding station jib cranes, weld turntables, horizontal transfer cart, horizontal lifting system, and decontamination and inspection manipulator.

The potential consequence of roof and building collapse as a source term initiator is described in Section 3.1.1 where it is concluded that such structures must withstand a Frequency-Category-2 DBEQ.

Potential seismic DBEs and related dose calculations for each operational area of the DCHS are listed in Table 7-7. Scoping dose calculations indicate that the potential releases must be prevented or mitigated to comply with 10 CFR 60. The largest potential dose results from the assumed slapdown of all the DCs in the DC Staging Area during a seismic event. It should be noted that DCs may be staged in the welded or unwelded condition. In the unwelded condition, there is no design basis for a slapdown event and the contents of the DC are presumed to spill out and breach. Other potential seismic events in the DCHS include:

- welding burnthrough
- vertical DC drops
- crane falling onto a DC at the tilting station; and
- horizontal drop in the WP Transfer/Decon Area

The unmitigated doses at the 5-km offsite boundary exceed the dose limits for Category 2 DBEs; therefore, the SSCs important to radiological safety must be designed to withstand a Frequency-Category-2 DBEQ.

Table 7-8 summarizes the seismic classification of SSCs of the Disposal Container Handling System for two alternative design strategies: mitigation and prevention. For the mitigation strategy, credit is taken for the building confinement and HEPA filtration system to mitigate potential radiological releases. In this case, the building (i.e., roof and walls) and the HVAC system must be designed to withstand a Frequency-Category-2 DBEQ.

For the prevention strategy, it is assumed that seismic-initiated events which have the potential to exceed the regulatory dose limits are prevented by designing the appropriate SSCs to withstand a Frequency-Category-2 DBEQ. In the latter case, no credit is taken for mitigating features (e.g., HEPA filters) and the emphasis is on preventing any radiological releases from occurring. However, the prevention strategy may not be practical where bare fuel assemblies are involved (i.e., events with unsealed DCs containing commercial SNF).

As elsewhere in the surface facilities, SSCs inside a Frequency-Category-2 confinement, which are associated with initiating a release in an earthquake, can be designed to withstand a Frequency-Category-1 DBEQ (or UBC based solely on dose consequences) since the resulting doses are less than the limits of 10 CFR 20. With the prevention strategy, the confinement structure would not be required to ensure compliance with 10 CFR 60.

Another design option is to modify the design bases for the DCs so they could withstand greater impacts without breaching. This would eliminate many of the potential slapdown and drop events in Table 7-8. Remaining would be the slapdown of an unsealed DC from a transfer cart and the welding burnthrough. In this case, the SSCs associated with those events would have to withstand a Frequency-Category-2 DBEQ, but no confinement would be required except for normal operational releases; or as described

previously, the confinement can be designed to withstand a Frequency-Category-2 DBEQ and the SSCs associated with the initiation of a release can be Frequency-Category-1.

Preclosure Safety Strategy - This system performs the function *Packaging/Sealing of Waste Package*. The Preclosure Safety Strategy identified for this function differentiates the requirements before sealing and after sealing the DC, and the requirements for bare fuels versus canistered fuels.

For the case of *Before Sealing – Bare Fuels*, the primary safety feature is confinement by the hot cell; the secondary feature is confinement by the facility surrounding the hot cell; and the defense-in-depth feature is to prevent lifting and tipping of a loaded, unsealed DC. With this strategy, offsite dose requirements could be met by designing the hot cell ventilation system to withstand a Frequency-Category-2 DBEQ. The Preclosure Safety Strategy does not specifically address the seismic-initiated event of a heavy object falling onto and breaching a DC. However, regardless of the release scenario, if the building structure and HEPA filter are designed to withstand a Frequency-Category-2 DBEQ, the offsite dose limits will not be exceeded. Defense-in-depth safety features for prevention of unsealed DC drops and slapdowns could be credited if the DC crane, fixtures, and lifting mechanisms are designed to withstand a Frequency-Category-2 DBEQ.

For the case of *Before Sealing – Canister Fuels*, the primary safety feature is to prevent lifting and tipping of a loaded, unsealed DC. At present, we have not assessed the potential seismic consequences associated with canistered wastes other than DHLW vitrified glass. Assuming a DC drop and/or slapdown from normal operating lift heights could breach a canister and result in doses exceeding the limits for Category 2 DBEs, SSCs required to prevent lifts and slapdowns would have to be designed to withstand a Frequency-Category-2 DBEQ. Given that the same SSCs handle DCs containing bare or canistered fuels, meeting this requirement would provide defense-in-depth for the bare fuel case as well. The secondary safety feature is *Containment by Canister*, which leads to a requirement that any heavy objects (e.g., falling cranes) capable of breaching a canister must be designed to withstand a Frequency-Category-2 DBEQ. Defense-in-depth for this case relies on confinement by the facility, which is currently included in the VA design for the DCHS and has been shown by this analysis to be necessary to meet the Category 2 offsite dose limits for seismic-initiated DBEs involving bare fuel.

For the case of *After Sealing*, the primary safety feature is containment by the WP inner barrier; secondary is containment by the WP outer barrier; and the defense-in-depth safety feature is to prevent lifting and tipping of WP. Both the primary and secondary safety features rely on the WP for containment of radionuclides; therefore, the WP and any SSCs that could potentially cause (or interact with another SSC to cause) a breach during a seismic-initiated event must be designed to withstand a Frequency-Category-2 DBEQ. In this analysis, the bridge crane and the horizontal lifting system were the only SSCs identified that could potentially exceed the WP design basis by falling onto the WP during a DBEQ. Implementing the defense-in-depth feature would serve to preserve the WP containment and ensure that no radiological release is possible due to a drop or slapdown event.

3.2 Subsurface Facilities

3.2.1 Summary

In FY97, a preliminary analysis was performed to identify and screen potential DBEs for the subsurface facilities (Ref. 7.44). That analysis included both internal and external events. Section 5.5 (of the present report) summarizes the analysis of subsurface internal events. External events included earthquakes and noted that event scenarios initiated by earthquakes are largely covered by the internal event analyses. The exception being the potential for common-cause initiation of more widespread collapse of ground support and rockfall. Reference 7.44 also considered the safety implications of a loss-of-offsite power, which can also be initiated by an earthquake. Thus, this analysis for seismic classification of subsurface SSCs draws upon the analyses of Reference 7.44.

The seismic classification applies the procedure described in Section 2 of this report. The principal SSCs (by function) were examined individually for potential scenarios that might occur if the SSC were to lose its ability to function or fail as a result of an earthquake. In this analysis, it is not necessary to state the magnitude or return period of the earthquake. As in the surface facilities, the dose consequence of a seismic event was the only decision criteria used to assign a seismic classification. Seismic classifications may be upgraded for other reasons such as defense-in-depth, throughput, cost, or investment risk.

Table 7-9 summarizes the subsurface seismic analysis by providing an SSC failure scenario and the basis for seismic classification. For most SSCs, a single seismic classification is shown; others show the most conservative classification with the optional lower classification in parenthesis. The following subsection provides rationale for the analysis.

3.2.2 Discussion

Dose Calculations - Table 7-10 presents results of offsite dose calculations for bounding event scenarios in the subsurface: rockfall in an emplacement drift and runaway transporter. Based on the bounding calculations in Reference 7.44, offsite doses were calculated for several waste package configurations as shown in Table 7-10. Both conservative and best estimate doses are shown and are based on the source term and other assumptions described in Section 2.2 of this report. The dose calculations of Reference 7.44 were revised to include the source terms from Section 2.2.1. The conservative doses from a single waste package during a rockfall or runaway transporter exceed the limits for Category 2 DBEs and must be prevented or mitigated in the event of a Frequency-Category-2 DBEQ.

If an earthquake of magnitude beyond the design basis of the ground support occurs, it is considered a common-cause initiator that can simultaneously induce rockfall in all emplacement drifts. The bottom portion of Table 7-10 illustrates the bounding offsite dose that might be realized if all emplacement drifts were to experience rockfall throughout and breach all the emplaced waste packages. The conservative rockfall doses from the upper part of the table were scaled by the number and content of waste packages and summed. As indicated, the sum of the potential doses is much greater than the dose limit for Category 2 DBEs.

Overview of Subsurface Seismic Scenarios - In addition to the waste packages, there are three primary groups of SSCs in the subsurface facilities: (1) the active systems that transport and emplace the waste packages, including the rail, electrification, instrumentation, control, and communications systems; and ventilation system; (2) the passive ground support; and (3) auxiliary systems such as fire-suppression, lighting, radiation monitoring, and general communications.

Active Systems - The design bases of the waste packages includes the maximum impacts identified for transport and emplacement handling (e.g., derailments, drops, tipovers, and fires) without breaching. Further, the waste package will be designed to withstand a Frequency-category-2 DBEQ because it is the confinement structure. Therefore, should an earthquake initiate a derailment or runaway of a transporter train, waste package ejection from the transporter, or drop of a waste package, the impact on the waste package will be within its design basis and no release will result. Thus, the seismic consequences are bounded by the internal event analyses for subsurface operations. Based on offsite dose considerations, the SSCs associated with subsurface transport and emplacement do not have to withstand a DBEQ since there are no credible breaches of the waste package. Since the upset events like dropping waste packages in the emplacement drifts or transporter derailment could result in worker doses beyond the limits, depending on the mode of recovery (analysis is required), and for defense-in-depth to reduce the likelihood of seismic-induced upsets, it may be advisable to require these SSCs to withstand a Frequency-Category-1 DBEQ.

Another potential consequence of a runaway of the transporter train, whether seismic-initiated or otherwise, is destruction of ground support members. If steel sets are used in the curve, then several steel sets would be expected to be displaced and destroyed by the impact of the train at the bottom of

the ramp, possibly resulting in a localized rockfall. This would complicate cleanup and recovery but is not likely to generate a rockblock of sufficient mass to breach a waste package within a transporter car. This will have to be confirmed. This interaction and potential rockfall would be localized, however, and is judged not to be a sufficient reason to require that a runaway be designed to the Frequency-Category-2 DBEQ in order to prevent adverse interaction with the ground support. A concrete ground support might also suffer damage from the event with similar potential for incurring localized rockfall.

Passive Systems - The design bases of the waste package also includes prevention of breaching by the impact of ground support or rockfall during the caretaking/monitoring phase for the largest rockblock mass deemed to be credible. The maximum credible rockblock (monolith of jointed tuff) was estimated to be 25 MT and was set as a design basis (Ref. 7.23). The conditional probability of a waste package being breached is the product of (1) the probability that the rockblock is greater than the design limit of a full-strength waste package (i.e., 25 MT), and (2) the probability that one or more waste packages are struck by the falling monolith. The probability analysis from Table 7.2-14 of Reference 7.44 indicates a range of 1.3×10^{-5} to 1×10^{-3}, with a best estimate of 1×10^{-4} as the conditional probability of striking a waste package and having sufficient mass to breach it. This means that, assuming ground support fails and a rockfall occurs, the conditional probability of a breach per emplaced waste package is about 1×10^{-4}. For a static rockfall event (i.e., a random, internal event), the probability of breaching a single waste package per event was also considered. For a population of 10,213 emplaced waste packages at risk during an earthquake that could cause simultaneous failure of all ground support in all emplacement drifts, there is a conditional probability of approximately 1.0 (multiplied by 10^{-3} or 10^{-4} for Frequency-Category-1 and Frequency-Category-2, respectively) that at least one waste package will be breached. The resulting dose for one breached waste package, unmitigated, is more than 5 rem so the event must be prevented or mitigated in the event of a Frequency-Category-2 DBEQ. For prevention of the potential release as well as to ensure accessibility and retrievability, it is recommended that ground support for the emplacement drifts be Frequency-Category-2. Should future analyses show that the probability of a large rockblock is significantly less than 1×10^{-4}, the design requirements of the ground support can be reduced to Frequency-Category-1, or UBC.

Auxiliary Systems - Seismic failures were considered for potential interaction with other SSCs as described in Table 7-9.

3.3 Conclusions

If the ground support systems throughout the emplacement, main, and ventilation drifts are designed to withstand the Frequency-Category-2 vibratory ground motion DBEQ, and the waste packages are designed to withstand the same DBEQ and the impacts associated with transport and handling events, then it can be reasoned that all other SSCs in the subsurface need not be designed to withstand a DBEQ for offsite dose considerations. However, some subsurface SSCs may have to withstand a Frequency-Category-1 DBEQ due to worker dose considerations. Further, it may be desirable to design some subsurface SSCs to withstand a Frequency-Category-1 DBEQ for defense-in-depth. SSCs that fail in such an earthquake, including radiation-monitoring equipment, can be refurbished and operations resumed. In the aftermath of an earthquake that results in failure of the monitoring, lighting, or communications systems, portable equipment will be sufficient to survey the underground, as long as there is high confidence that the drifts have survived. As long as the earthquake does not equal or exceed the Frequency-Category-2 design basis assumed for the drifts, this should be the case.

Table 7-1 Seismic DBE Consequences of Waste Handling Building Roof Collapse

	Note 1	Note 2		Note 3	Note 4	Note 5	Note 6	Note 7	Note 8			Note 9		
Waste Handling Building Operations Area	Worst Case Waste Form	Maximum Inventory (PWR/BWR)	DHLW	VA Roof Material	Roof Height (m)	Roof Area, A (m^2)	Min. Roof Mass, M (MT)	Max. Roof Thickness [t=M/(d*A)] (m)	Conservative Offsite Dose - No Mitigation (rem) Canister	PWR	BWR	Conservative Offsite Dose - with Mitigation (rem) Canister	PWR	BWR
Waste Treatment				Steel	9.14	4,831								
Carrier Bay	Cask	52/122		Steel	3.35	1,691	66	6.39		>>5	>>5		1.8E-02	2.5E-02
ATS Cask Prep/Air Lock	Cask	78/183		Steel	21.64	260	10	6.43		>>5	>>5		6.4E-02	8.9E-02
Pool Area (Note 10)	SFA	792/1584		Steel	21.64	334	0.04	0.02		>>5	>>5		7.3E-01	8.3E-01
DC Hot Cell (dryer)	SFA	126/264		Concrete	15.24	130	0.06	0.24		>>5	>>5		8.6E-02	1.0E-01
DC Load/Decon (ATS)	DC	63/132		Concrete	8.23	146	20	74.51		25	31		7.5E-03	9.3E-03
CTS Corridor	Canister		10	Steel	18.29	752	1	0.18	>5			7.50E-03		
CTS Cask Prep/Decon	Canister		10	Steel	12.19	260	1	0.79	>5			5.10E-03		
CTS Lag Storage	Canister		40	Concrete	19.51	37	1	11.48	>>5			3.20E-02		
DC Load Area (CTS)	Canister		10	Concrete	19.51	272	1	1.57	>5			8.10E-03		
DC Handling Cell	DC	105/220		Concrete	18.29	1,208	9	4.06		>>5	>>5		8.3E-02	1.0E-01
DC Staging Area	DC	420/880		Concrete	18.29	637	9	7.70		>>5	>>5		2.9E-01	3.6E-01
DC Transfer/Load	DC	21/44		Concrete	9.14	242	18	40.64		>5	>5		7.5E-03	9.3E-03
WP Remediation	DC	21/44		Concrete	4.88	195	34	94.25		>5	>5		7.5E-03	9.3E-03

Notes:

1 Worst case waste form handled from a dose consequence perspective
2 Max. potential inventory based on Ref. 7.26
3 Based on input from Surface Facility Designers
4 Estimated roof heights based on Reference 7.27, Figures 8-9.
5 Estimated cell areas based on Reference 7.27, Figure 4.
6 Minimum roof mass equivalent to a waste form drop from above the design height
7 Assumes roof is homogeneous with a density equal to steel or concrete
8 Deterministic TEDE dose with PWR/BWR/DHLW DBF source term, PULF and no HEPA filtration
9 Deterministic TEDE dose with PWR/BWR/DHLW DBF source term, PULF and single-stage HEPA filtration
10 Max inventory source term assumes no water is present in the pools

Waste Form	Assumed Max. Loaded Mass (MT)	Assumed Design Basis End-Drop Height (m)	Basis for Assumption
Cask	1.11E+02	2.0	ISF TSAR, Table 5.1.1.-2, "Loaded Cask System Maximum Drop Heights" (see Attachment II)
Canister	2.20E+00	7.0	Savannah River Company Canister Procurement Specification (Ref. 7.19)
SFA	8.83E-01	1.0	Best estimate from WP Design
DC	8.30E+01	2.0	Uncanistered SNF System Description Document (Ref. 7.9)

Calculation method: Using the design basis drop height for each waste form, equated the potential energy of the waste form mass dropping from its design basis height to the potential energy of the roof mass dropping from the roof height.

MxgxH = mxgxh
M = Roof mass
H = roof height
m = waste form mass
h = design basis drop height

	Density, d lb/ft^3	MT/m^3
Concrete	146.6	1.85E-03
Steel	486.5	6.13E-03

Table 7-2 Seismic Dose Calculations: Receipt of Waste

System/Operational Sequence	Equipment	Potential DBE	SSC Failure	PULF Equivalent Drop Height (m)	Source Term # Assemblies PWR	Source Term # Assemblies BWR	Mitigated Offsite Dose (rem) PWR	Mitigated Offsite Dose (rem) BWR	Unmitigated Offsite Dose (rem) PWR	Unmitigated Offsite Dose (rem) BWR
Carrier/Cask Transport System										
Onsite Transfer to CPB	Site Mover	Diesel Fire			26	61	NR	NR	NR	NR
	Rail Carrier	Drop from Carrier Cradle	Carrier Cradle	1.5[a]	26	61	NR	NR	NR	NR
	Truck Carrier	Drop from Carrier Cradle	Carrier Cradle	1.2[a]	4	9	NR	NR	NR	NR
CPB Material Handling System										
A. Measure External Radiation										
B. Remove/Retract Personnel Barrier										
C. Inspect for Radiation Contamination										
D. Measure External Cask Temperature										
E. Remove/Retract Impact Limiters	Impact Limiter Sling/Spreader Bar	NA								
	CPB Bridge Crane (10 ton)	Handling Equipment Drops on Cask	Crane		26	91				
	CPB Gantry Mounted Manipulator	Handling Equipment Drops on Cask	Gantry		26	91	NR	NR	NR	NR
F. Haul Carrier to WHB Using Site Prime Mover	Rail Carrier	Drop from Carrier Cradle	Carrier Cradle	1.5	26	61	2.13E-03	2.88E-03	>5	>5
	Truck Carrier	Drop from Carrier Cradle	Carrier Cradle	1.2	4	9	2.85E-04	3.60E-04	0.95	1.2
	Onsite Mover	Diesel Fire			26	61	NR	NR	NR	NR
		Bridge collapse	Bridge	>1.5	26	61	2.13E-03	2.88E-03	>5	>5
Carrier/Cask Handling System										
Carrier Washdown Station	Water Washdown Device	NA								
Carrier Bay										
A. Detension Hold-Downs	Gantry Mounted Manipulator	Handling Equipment Drops on Cask	Gantry		26	61	NR	NR	NR	NR
B. Upright Cask	Lifting Yoke Bridge Crane	Slapdown onto carrier	Crane, Yoke	5.3[b]	26	61	5.76E-03	7.95E-03	>5	>5
C. Lift Cask Off Carrier	Lifting Yoke Bridge Crane	Drop onto floor	Crane, Yoke	6.4/4.1[c]	52	122	9.21E-03	1.27E-02	>5	>5
D. Transfer cask to cask cart	Lifting Yoke Bridge Crane Transfer Cart	Drop onto transfer cart	Crane, Yoke	3.5	52	122	8.04E-03	1.10E-02	>5	>5
E. Move Cart into airlock	Transfer Cart	Slapdown from Transfer cart	Transfer Cart	5.3[d]	52	122	1.16E-02	1.59E-02	>5	>5

Notes:

[a] Carrier Bed height per David Rhodes, Rail - 60", truck 48".
[b] Slapdowns assume to be equivalent to height of tallest cask 210"
[c] Nominal Lift Height 13'6", Two-Block 20'10"
[d] Transfer Cart height 2'
e No Release

Table 7-3 Seismic Classification of SSCs for Receipt of Waste

Location/Equipment	Part Number	SSC Seismic Failure	Seismic Frequency Category[a] VA Design	Basis or Design Assumption	Seismic Frequency Category[a] Alternative Design [1,2]	Basis or Design Assumption	Seismic Frequency Category[a] Pre-closure Safety Strategy[3]	Basis or Design Assumption
Carrier/Cask Transport System								
Onsite Mover		Derailment	N/A	Impact limiters intact	N/A	Impact limiters intact	N/A	Impact limiters intact
Rail Carrier		Derailment, Tipover, Carrier Cradle/Hold-down	N/A	Impact limiters intact	N/A	Impact limiters intact	N/A	Impact limiters intact
Truck Carrier		Offload, collision, tipover, Carrier Cradle/Hold-down	N/A	Impact limiters intact	N/A	Impact limiters intact	N/A	Impact limiters intact
Railway/Roadway			N/A	Impact limiters intact	N/A	Impact limiters intact	N/A	Impact limiters intact
CPB Material Handling System								
Impact Limiter Sling/Spreader Bar	CH-FX-100	Falls onto cask	UBC	Insufficient mass to damage cask	UBC	Insufficient mass to damage cask	UBC	Insufficient mass to damage cask
CPB Bridge Crane (10 ton)	CH-CN-100A&B	Crane - falls onto cask; drops impact limiter or personnel shield onto cask	UBC	Insufficient mass to damage cask	UBC	Insufficient mass to damage cask	UBC	Insufficient mass to damage cask
CPB Gantry Mounted Manipulator	CH-CN-101A&B	Gantry - stops functioning	UBC	Insufficient mass to damage cask	UBC	Insufficient mass to damage cask	UBC	Insufficient mass to damage cask
Building		Structure and frame - falls onto cask	UBC	Insufficient mass to damage cask	UBC	Insufficient mass to damage cask	UBC	Insufficient mass to damage cask
Rail Carrier		Carrier Cradle - cask shaken off/drops	FC-2	Drop onto hard surface > cask design basis	UBC [1,2] [or FC-1(w)]	Drop within design basis of cask	UBC [1,2] [or FC-1(w)]	Drop within design basis of cask
Truck Carrier		Carrier Cradle - cask shaken off/drops	FC-1	Drop onto hard surface > cask design basis	UBC [1,2] [or FC-1(w)]	Drop within design basis of cask	UBC [1,2] [or FC-1(w)]	Drop within design basis of cask
Onsite Mover		Derailment - causes tipover of carrier	FC-2	Drop onto hard surface > cask design basis	UBC [1,2] [or FC-1(w)]	Drop within design basis of cask	UBC [1,2] [or FC-1(w)]	Drop within design basis of cask
Railway/Roadway		Bridge	FC-2	Drop onto hard surface > cask design basis	UBC [1,2] [or FC-1(w)]	Drop within design basis of cask	UBC [1,2] [or FC-1(w)]	Drop within design basis of cask
Railway/Roadway		Road structure/support - tipover of carrier	FC-2	Drop onto hard surface > cask design basis	UBC [1,2] [or FC-1(w)]	Drop within design basis of cask	UBC [1,2] [or FC-1(w)]	Drop within design basis of cask
Carrier/Cask Handling System								
Water Washdown Device		None identified	UBC	No safety issue	UBC	No safety issue	N/A	
Carrier Bay								
Gantry Mounted Manipulator	PH-EM-100A-C	Gantry-stops functioning; impacts carrier & cask	UBC	Insufficient mass/momentum to damage carrier or cask	UBC	Insufficient mass/momentum to damage carrier or cask	N/A	
Lifting Yoke	PH-FX-100	Yoke - drops cask or permits slapdown	FC-2	Drop onto hard surface > cask design basis	UBC [1,2] [or FC-1(w)]	Drop within design basis of cask	UBC [b] [or FC-1(w)] or FC-1(d)	Confinement by building
Bridge Crane	PH-CN-100	Lifting Mechanism & Controls - drops cask or permits slapdown	FC-2	Drop onto hard surface > cask design basis	UBC [1,2] [or FC-1(w)]	Drop within design basis of cask	UBC [b] [or FC-1(w)] or FC-1(d)	Confinement by building
Transfer Cart	PU-CR-110 or PC CR-110	Cart, cask restraints	FC-2	Drop onto hard surface > cask design basis	UBC [1,2] [or FC-1(w)], or FC-2	Drop within design basis of cask[1,2]; FC-2 if Impact limiters not on cask	UBC [b] [or FC-1(w)] or FC-1(d)	Confinement by building
Bridge Crane	PH-CN-100	Rails, supports	FC-2	Heavy mass impacts cask > design basis	FC-2	Heavy mass impacts cask > design basis	UBC [b] [or FC-1(w)] or FC-1(d); or FC-2[b]	Confinement by building; potential structural interaction
Building (non-containment)		Structure (other than crane supports)	UBC	Insufficient mass/momentum to damage carrier or cask	UBC	Insufficient mass/momentum to damage carrier or cask	N/A	
Building (non-containment)		Doors - rail/roadway entrance/exit	UBC	No safety function; weather/dust control	UBC	No safety function; weather/dust control	N/A	
Building - containment function		Structure, air-lock doors	N/A	N/A			FC-2	Confinement by building must withstand maximum design basis earthquake
Ventilation/filtration system		Ducting, filters, fans & controls	N/A	N/A			FC-2	Confinement by ventilation/filtration must withstand maximum design basis earthquake

[a] With credit for containment of building and ventilation/filtration system.
[b] Must be FC-2 if failure could compromise the integrity of the containment building.
1 Cask required or shown to withstand normal operating drop/slapdown.
2 Impact limiters left on cask.
3 Related to function of reference design; Preclosure Safety Strategy may lead to alternative design concepts; primary change assumed here is confinement surrounding Carrier Bay.
4 FC-1 = Frequency Category 1 because dose exceeds 100 mrem at the offsite boundary;
FC-2 = Frequency Category 2 because of dose exceeds 5 rem at the offsite boundary;
UBC = Uniform building Code based on zero dose or acceptable offsite dose;
FC-(w) = May require Frequency Category 1 because of potential worker dose (worker doses not evaluated in this analysis);
FC-1(d) = elective Frequency Category 1 for defense-in-depth.

Table 7-4 Seismic Dose Calculations: Assembly Transfer System

ATS Location/Activity	Equipment	Potential DBE	SSC Failure	PULF Equivalent Drop Height (in)	Source Term # PWR/BWR SFAs	Mitigated Dose (rem) @ 5-km PWR[1]	Mitigated Dose (rem) @ 5-km BWR[1]	Unmitigated Dose (rem) @ 5-km PWR[1]	Unmitigated Dose (rem) @ 5-km BWR[1]
Receive Trans. Cask from CCHS A. Transfer from CCHS	Cask transfer cart	**Slapdown from transfer cart** Collision with ATS Airlock Door	**Cask Transfer Cart**	210	78/183	2.5E-02	3.1E-02	>5	>5
Cask Prep and Decon Room A. Remote cask cavity gas sampling B. Cask venting C. Cask gas and water cool-down D. Outer lid removal E. Inner shield plug lifting fixture attachment F. DPCs remotely sampled, vented, cooled G. DPC lifting fixture remotely attached	Cask transfer cart Cask unloading area bridge crane Cask prep manipulator Cask lid lifting fixture Dry cask lifting yoke Large, small DPC lifting fixtures Wet cask lifting yoke	Slapdown from transfer cart **Cask drop from bridge crane into pit** Handling equipment drops on cask	Yoke **Bridge Crane** Lifting Fixtures	129	78/183	1.9E-02	2.3E-02	>5	>5
Cask Unloading Pool A. Cask placed in pool, inner shield plug out B. Cask inner shield plug removed C. Cask containing DPC put into pool D. DPC removed from cask, put in overpack E. DPC lid severed and removed F. Assemblies taken from DPC/cask to baskets	Large, small DPC overpacks Large, small DPC lid severing tools Wet assembly lifting grapple Wet assembly transfer machine Pool, downstream valves and drains	Handling equipment drops on cask Handling equipment drops on DPC **Cask drop from bridge crane into pool** Assembly drop onto pool floor, cask	Lifting grapples **Bridge Crane** Wet assembly transfer machine	N/A	78/183	Note (2) 7.5E-03	7.4E-03	7.5E-03	7.4E-03
Transfer Corridor A. Transfers individual loaded or empty assembly baskets between lines	Cross-line transfer canal cart Assembly baskets	**Assembly basket drop onto pool floor,** transfer cart, other baskets	**Wet assembly transfer machine** Transfer cart Assembly baskets	N/A	12/24	Note (2) 1.2E-03	9.7E-04	1.2E-03	9.7E-04
Assembly Staging Pool A. Assembly baskets from staging rack to incline transfer canal cart B. Baskets transferred by cart to Assembly Handling Cell	Incline transfer canal cart Assembly baskets Basket staging rack	**Assembly basket drop onto pool floor,** transfer cart, **other assembly baskets**	**Wet assembly transfer machine** Transfer cart **Assembly baskets** **Staging rack**	N/A	24/48	Note (2) 2.3E-03	1.9E-03	2.3E-03	1.9E-03
Assembly Handling Cell A. Baskets loaded individually into Assembly Drying Vessels B. After drying, assemblies individually moved from drying vessels and loaded into a DC C. DC inner lid sealing device is installed D. DC moved to DC Decontamination Cell	Assembly handling cell bridge crane Assembly handling cell manipulator Dry assembly transfer machine Dry assembly lifting grapples Assembly drying vessel shield plug Assembly drying vessels DC load port shield plug DC lid lifting device DC load port mating device DC inner lid sealing device Transfer corridor bridge crane	**Assembly basket drop onto floor, onto another basket,** into dryer, into DC Handling equipment drop onto basket, dry transfer machine	**Dry assembly transfer machines** Bridge Crane Grapples	198/300	24/48	7.4E-03	1.6E-02	>5	>5

Notes:
(1) PWR DBF and BWR DBF are assumed in this analysis
(2) Pool mitigates 100% of particulates

Table 7-6 Seismic Classification of SSCs for Assembly Transfer System

Location/Equipment	Equipment Identifier	SSC Seismic Failure	Seismic Frequency Category [1]	Strategy: Mitigation Basis or Design Assumption [2]	Seismic Frequency Category [1]	Strategy: Prevention Basis or Design Assumption [3]
Airlock						
Roof; walls	N/A	Concrete mass falls onto cask	FC-2	Prevent roof collapse onto transportation cask	FC-2	Prevent roof collapse onto transportation cask during DBEQ
Cask transfer cart	PU-CR-110	Slapdown from transfer cart; impact with cell walls	FC-1 (or UBC)[4]	Mitigated dose less than 5 rem; credit for confinement, otherwise FC-2	FC-2	Prevent slapdown or collision of transport cask due to DBEQ
Cask transfer cart - control & motive systems	PU-CR-110	Collision with Airlock Door; breach cask; or breach building confinement	FC-1 (or UBC)[4]	Mitigated dose less than 5 rem; credit for confinement, otherwise FC-2	FC-2	Prevent slapdown or collision of transport cask due to DBEQ
Airlock doors	N/A	Fail to maintain building confinement	FC-1 (or UBC)[4]	Maintain confinement for Assembly Transfer Cell	FC-2	Prevent loss of confinement for ATS cell during DBEQ
Cask Prep and Decon Room						
Roof; walls	N/A	Concrete mass falls onto cask	FC-2	Prevent roof collapse onto transportation cask during DBEQ	FC-2	Prevent roof collapse onto transportation cask during DBEQ
Cask unloading area bridge crane - lifting mechanisms & controls	PU-CN-110	Cask drop from bridge crane into pit	FC-1 (or UBC)[4]	Mitigated dose less than 5 rem; credit for confinement, otherwise FC-2	FC-2	Prevent drop of transport cask during DBEQ
Cask unloading area bridge crane - location motive & control	PU-CN-110	Uncontrolled motion- collision beyond cask design basis	FC-1 (or UBC)[4]	Mitigated dose less than 5 rem; credit for confinement, otherwise FC-2	FC-2	Prevent drop of transport cask during DBEQ
Cask unloading area bridge crane - rails and supports	PU-CN-110	Crane falls onto cask (see below)	FC-1 (or UBC)[4]	Mitigated dose less than 5 rem; credit for confinement, otherwise FC-2	FC-2	Prevent crane drop onto transport cask during DBEQ
Cask prep manipulator	PU-EM-110	Handling equipment drops on cask	UBC	Insufficient mass to breach transportation cask	UBC	Insufficient mass to breach transportation cask
Cask lid lifting fixture	PU-FX-110	Handling equipment or lid drops on cask	UBC	Insufficient mass to breach transportation cask	UBC	Insufficient mass to breach transportation cask
Dry cask lifting yoke	PU-FX-100	Drop cask	UBC	Cask designed to withstand drop from normal operational heights	FC-2	Prevent drop of transport cask during DBEQ
Large, small DPC lifting fixtures	PU-FX-123, PU-FX-124	Drop DPC	UBC	Cask designed to withstand drop from normal operational heights	FC-2	Prevent drop of DPC during DBEQ
Wet cask lifting yoke	PU-FX-101	Drop cask	UBC	Cask designed to withstand drop from normal operational heights	FC-2	Prevent drop of transport cask during DBEQ
Cask Unloading Pool (part of pool)						
Pool structure and liner	N/A	Drain/leak from pool -Loss of radionuclide retention in water; loss of water seal to Assembly handling cell; heatup of fuel assemblies	FC-2	Prevent breach of pool confinement	FC-2	Prevent breach of pool confinement
Pool, downstream valves and drains	N/A	(same as for pools structure & liner)	FC-2	Prevent breach of pool confinement	FC-2	Prevent breach of pool confinement
Large, small DPC overpacks	PU-CA-121, PU CA-122	DPC drops on overpack inside pool	UBC	DPCs designed to withstand impact of falling onto overpack underwater	FC-2	Prevent damage to DPC/SNF due to equipment fall/failure during DBEQ
Large, small DPC lid severing tools	PU-ME-110, PU ME-112	Handling equipment drops on DPC	UBC	Insufficient mass to breach DPC	FC-2	Prevent damage to DPC/SNF due to equipment fall/failure during DBEQ
Wet assembly lifting grapple	PU-FX-113	Cask drop from bridge crane into pool	UBC	Cask/DPC designed to withstand impact of drop onto pool floor	FC-2	Prevent damage to SNF assemblies due to equipment fall/failure during DBEQ
Wet assembly transfer machine	PU-MA-112	Assembly drop onto pool floor, cask	FC-1 (or UBC)[4]	Mitigated dose less than 5 rem; credit for confinement, otherwise FC-2	FC-2	Prevent damage to SNF assemblies due to equipment fall/failure/fuel drop during DBEQ
Bridge crane - lifting mechanisms & controls	PU-CN-110	Drop of equipment onto assemblies during equipment movement	FC-1 (or UBC)[4]	Mitigated dose less than 5 rem; credit for confinement, otherwise FC-2	FC-2	Prevent damage to SNF assemblies due to equipment drop during DBEQ
Bridge crane - rails and supports	PU-CN-110	Crane falls into pool; damages pool liner and/or structure/assemblies	FC-2	Prevent breach of pool confinement	FC-2	Prevent damage to pool due to crane fall during DBEQ
Transfer Corridor (part of pool)						
Cross-line transfer canal cart	PU-CR-113	Assembly basket drop onto pool floor, breach of assemblies	FC-1 (or UBC)[4]	Mitigated dose less than 5 rem; credit for confinement, otherwise FC-2	FC-2	Prevent damage to SNF assemblies due to cart failure during DBEQ
Assembly baskets	PU-CA-114, PU CA-115, PU-CA 127	Basket allows assemblies to fall on floor of pool, breach of assemblies	FC-1 (or UBC)[4]	Mitigated dose less than 5 rem; credit for confinement, otherwise FC-2	FC-2	Prevent damage to SNF assemblies due to basket failure/assembly drop during DBEQ
Wet assembly transfer machine	PU-MA-112	Drops basket of assemblies onto floor or onto other baskets in rack	FC-1 (or UBC)[4]	Mitigated dose less than 5 rem; credit for confinement, otherwise FC-2	FC-2	Prevent damage to SNF assemblies due to equipment fall/failure/fuel drop during DBEQ

Location/Equipment	Equipment Identifier	SSC Seismic Failure	Seismic Frequency Category [1]	Strategy: Mitigation Basis or Design Assumption [2]	Seismic Frequency Category [1]	Strategy: Prevention Basis or Design Assumption [3]
Assembly Staging Pool						
Cask unloading area bridge crane	PU-CN-110	Crane falls onto fuel storage rack	FC-1 (or UBC)[4]	Mitigated dose less than 5 rem; credit for confinement, otherwise FC-2	FC-2	Prevent damage to SNF assemblies due to crane fall onto fuel storage rack during DBEQ
Incline transfer canal cart	PU-CR-111	Drops basket of assemblies onto floor or onto other baskets in rack	FC-1 (or UBC)[4]	Mitigated dose less than 5 rem; credit for confinement, otherwise FC-2	FC-2	Prevent damage to SNF assemblies due to cart failure during DBEQ
Basket staging rack	PU-SR-110	Racks fail, allows assembly baskets to fall on floor of pool, breach of assemblies	FC-1 (or UBC)[4]	Mitigated dose less than 5 rem; credit for confinement, otherwise FC-2	FC-2	Prevent damage to SNF assemblies due to equipment failure during DBEQ
Assembly Handling Cell						
Roof; walls	N/A	Concrete mass falls onto assembly dryer	FC-2	Prevent roof collapse onto SNF assemblies, loss of confinement, during DBEQ	FC-2	Prevent roof collapse onto SNF assemblies, loss of confinement duue to DBEQ
Transfer corridor bridge crane - rails & supports; motion & control systems	AR-CN-100	Crane falls into pool incline; breaches pool liner and structure; loss of pool water; interaction with walls of containment building; falls onto loaded assembly dryer or dry assembly transfer machine causing breach of waste form	FC-1 (or UBC)[4]	Mitigated dose less than 5 rem; credit for confinement, otherwise FC-2	FC-2	Prevent crane drop onto SNF assemblies due to DBEQ
Transfer corridor bridge crane-lifting mechanism & controls	AR-CN-100	Drops heavy maintenance load; breaches pool liner and structure; drop load onto loaded dryer or dry fuel transfer machine, breach of waste form	FC-1 (or UBC)[4]	Mitigated dose less than 5 rem; credit for confinement, otherwise FC-2	FC-2	Prevent crane from dropping equipment onto SNF assemblies during DBEQ
Assembly handling cell bridge crane - rails & supports	PU-CN-113	Crane falls into pool incline; if mass enough, breaches pool liner and structure; loss of pool water; interaction with walls of containment building; falls onto loaded assembly dryer or dry assembly transfer machine, causing breach of waste form	FC-1 (or UBC)[4]	Mitigated dose less than 5 rem; credit for confinement, otherwise FC-2	FC-2	Prevent crane drop onto SNF assemblies during DBEQ, prevents loss of confinement
Assembly handling cell bridge crane - lifting mechanism & controls	PU-CN-113	Drop of load onto fuel dryer or transfer machine	FC-1 (or UBC)[4]	Mitigated dose less than 5 rem; credit for confinement, otherwise FC-2	FC-2	Prevent crane from dropping equipment onto SNF assemblies during DBEQ
Assembly handling cell manipulator	PU-EM-111	Fall into open fuel dryer or DC; breach waste form	FC-1 (or UBC)[4]	Mitigated dose less than 5 rem; credit for confinement, otherwise FC-2	FC-2	Prevent equipment from falling onto SNF assemblies during DBEQ
Dry assembly transfer machine	PU-MA-115	Drop fuel onto floor, into dryer, or into DC	FC-1 (or UBC)[4]	Mitigated dose less than 5 rem; credit for confinement, otherwise FC-2	FC-2	Prevent basket drops and bare assembly drops due to DBEQ
Dry assembly lifting grapples	PU-FX-111	Drops fuel onto floor, into dryer, or into DC	FC-1 (or UBC)[4]	Mitigated dose less than 5 rem; credit for confinement, otherwise FC-2	FC-2	Prevent basket drops and bare assembly drops due to DBEQ
Assembly drying vessel shield plug	PU-HA-111	None identified	UBC	No safety issue	UBC	No safety issue
Assembly drying vessels	N/A	None identified, dryers are fixed in place in the concrete floor of the hot cells	UBC	No safety issue	UBC	No safety issue
DC load port shield plug	PU-HA-112	None identified	UBC	No safety issue	UBC	No safety issue
DC lid lifting device	PU-DE-116	None identified	UBC	No safety issue	UBC	No safety issue
DC load port mating device	PU-DE-111	None identified	UBC	No safety issue	UBC	No safety issue
DC inner lid sealing device	PU-DE-119	None identified	UBC	No safety issue	UBC	No safety issue

Notes

(1) FC-1 = Frequency Category 1 based on offsite dose between 100 mrem and 5 rem;
FC-2 = Frequency Category 2 based on offsite dose greater than 5 rem;
UBC = Uniform building Code based on offsite dose less than 100 mrem;
FC-(w) = required Frequency-Category-1 because of worker dose;
FC-1(d) = elective Frequency-Category-1 for defense-in-depth

(2) Mitigation strategy takes credit for HVAC system and assumes HEPA filters mitigate the release; assumes that DBEs or drop events involving transport casks or bare fuel will be prevented through design changes or operational changes

(3) Prevention strategy focuses on preventing radiological releases by seismically qualifying any SSCs that interact with spent fuel; and assumes no credit for mitigating features (e.g., HEPA filter)

(4) Assigned FC-1 for defense-in-depth; may be downgraded to UBC based solely on dose consequence

Table 7-6 Seismic Classification of SSCs for Canister Transfer System

Location/Equipment	Part Number	SSC Seismic Failure	Seismic Frequency Category [1]	VA Design Basis or Design Assumption
Airlock/Cask Prep/Decon				
Airlock Isolation Door	PC-DO-110	Failure to maintain confinement after DBEQ	FC-2	Loss of confinement in hot cell
CTL Airlock Prep Isolation Door	PC-DO-111	Side impact to cask/canister	UBC	Insufficient mass to damage cask; no loss of confinement
CTL Cask Transfer Cart	PC-CR-110	Derailment causes tipover of cask	UBC	Assume confinement of hot cell; slapdown of cask within design basis of cask
CTL Cask Prep Manipulator	PC-EM-110	Drop onto cask	UBC	Insufficient mass to damage cask
CTL Cask Decon Device	PC-DC-110	Drop onto cask	UBC	Insufficient mass to damage cask
CTL Crane Maintenance Access Hatch	PC-DO-114	Drop onto cask	UBC	Insufficient mass to damage cask; no loss of confinement
Delid/Transfer/Loading				
CTL Canister Bridge Crane-85 Ton	PC-CN-110	Lifting mechanism/controls drop onto caniste	FC-1 (or UBC)[2]	Assume credit for HVAC and hot cell
CTL DC Loading Manipulator	PC-EM-111	Drop onto DC	UBC	Insufficient mass to damage DC
CTL DC Transfer Cart	PC-CR-111	Derailment causes tipover of cask	FC-1 (or UBC)[2]	Assume confinement of hot cell; slapdown of cask within design basis of cask
CTL Delid/Transfer Shield Door	PC-DO-112	Side impact to cask	UBC	Insufficient mass to damage cask
CTL Cask/Lid Lifting Fixture	PC-FX-110	Drop onto cask	UBC	Insufficient mass to damage cask
CTL Large Canister Lifting Fixture	PC-FX-111	Drops canister or permits slapdown	FC-1 (or UBC)[2]	Within design basis of canister; assume no breach
CTL DC Load Shield Door	PC-DO-113	Side impact to cask/canister	UBC	Insufficient mass to damage cask; no loss of confinement
CTL Small Canister Lifting Fixture	PC-FX-112	Drops canister or permits slapdown	FC-1 (or UBC)[2]	Within design basis of canister; assume no breach
Small Canister Staging Rack	PC-SR-110	Slapdown of 40 canisters	FC-1 (or UBC)[2]	Slapdown is within design basis of canister
CTL Cask Lid Lifting Fixture	PC-FX-110	Drop onto cask	UBC	Insufficient mass to damage cask
CTS Handling Cell				
CTS Control & Tracking System	N/A	None identified	UBC	No release identified
CTS Hot Cell Structure	N/A	Concrete mass falls onto cask/canister	FC-2	Required for confinement of particulate release
CTS HVAC	N/A	Fan failure, ducting crushed	FC-2	Required for mitigation of particulate release

Notes:
(1) FC-1 = Frequency Category 1 based on offsite dose between 100 mrem and 5 rem;
FC-2 = Frequency Category 2 based on offsite dose greater than 5 rem;
UBC = Uniform building Code based on offsite dose less than 100 mrem;
FC-(w) = required Frequency-Category-1 because of worker dose;
FC-1(d) = elective Frequency-Category-1 for defense-in-depth
(2) Assigned FC-1 for defense-in-depth; may be downgraded to UBC based solely on dose consequence

Table 7-7 Seismic Dose Calculations: Disposal Container Handling System

DCHS Location/Activity	Potential DBE	PULF Equivalent Drop Height (m)	SSC Failure	Source Term (# PWR/BWR SFAs)	Mitigated Dose (rem) @ 5-km PWR	Mitigated Dose (rem) @ 5-km BWR	Unmitigated Dose (rem) @ 5-km PWR	Unmitigated Dose (rem) @ 5-km BWR
Receive DC from CTS or ATS	Slapdown of unsealed DC from transfer cart (0.5m high) [1]	6.7	Cart	21/44	0.007	0.009	>5	>5
	Unsealed DC collision (shield door)	Bounded by Slapdown		0	0	0	0	0
DC Welding Station								
Remove DC outer lid	Slapdown of unsealed DC from welding fixture (0.5m high) [1]	6.7	Welding Turntable	63/132 + 5HLWC	0.02	0.03	>5	>5
Attach DC to turntable Remove inner lid seal with jib crane	<2m drop onto floor or welding turntable	<2m	Crane	0	NR	NR	NR	NR
Weld inner and perform NDE	Welding burnthrough	0	Welding Robot	63/132 + 5HLWC	0.002	0.003	>5	>5
Evacuate and fill with helium Place outer lid on DC with jib crane Weld outer lid and perform NDE	Fire	NC						
DC Staging Area Storage	Slapdown of unsealed DC from staging fixture (0.1m fixture) [1]	6.3	Staging Fixture	420/880	0.139	0.157	>>5	>>5
	Vertical drop (normal op) onto floor or staging fixture	<2m	Crane	0	NR	NR	NR	NR
DC Tilting Station					NR	NR		
Tilt DC from a vertical to a horizontal position with bridge crane	2m vertical Drop (normal op) onto floor or tilting station	1.9	Crane	0	NR	NR	NR	NR
	6m vertical Drop (2-block) onto floor or tilting station	6.0	Crane	21/44	0.007	0.007	>5	>5
	Handling equipment (>3.5MT) drops on DC (e.g.,100-ton bridge crane)	13.3	Crane	63/132 + 5HLWC	0.024	0.027	>5	>5
	Slapdown from tilting station (2m fixture) [2]	8.2	Crane, Fixture	21/44	0.009	0.010	>5	>5
Place DC on horizontal transfer cart	DC collision (WP exit shield door)	NR		0	0	0	0	0
Transfer DC to DC Transfer/Decon	1m fall off horizontal transfer cart [2]	0.86	Cart	0	NR	NR	NR	NR
WP Transfer/Decon Area Activities								
Lift DC and return transfer cart to DC cell	1m horizontal drop (normal op) from horiz. lifting system	1.0	Lift System	0	NR	NR	NR	NR
	2.5m horizontal drop (brakes fail) from horiz. lifting system	2.5	Lift System	21/44	0.003	0.004	>5	>5
Decon and sample DC Move emplacement railcar under DC Lower DC onto railcar	Pressurized projectile punctures DC	NR		0	0	0	0	0
Move DC to WP Transfer Corridor	DC collision (WP airlock isolation door)	NR		0	0	0	0	0
	Fall from horizontal transfer cart [2]	0.86	Cart	0	NR	NR	NR	NR

NR = No Release
NC = Not Credible

(1) Calculations assume that an unsealed DC is breached after any energetic event.

(2) Calculations assume that a sealed DC is breached if the equivalent drop height is greater than 2-meters. If the DC is designed to withstand all postulated slapdown events (Uncanistered DC SDD criteria 1.2.2.1.6), no release will occur.

(3) PWR DBF and BWR DBF are assumed in this analysis.

able 7-8 Seismic Classification of SSCs for DC Handling System

ocation/Equipment	Part Number	SSC Seismic Failure	Seismic Frequency Category [1]	Strategy: Confinement [2] Basis or Design Assumption	Seismic Frequency Category [1]	Strategy: Prevention [3] Basis or Design Assumption
C Handling Cell						
oof; walls	N/A	Concrete mass falls onto DC	FC-2	Potential for radiological release > 5 rem	FC-2	Potential for radiological release > 5 rem
/AC Structural Supports	N/A	Collapse of HVAC structural supports	FC-2	Required to mitigate potential radiological release > 5 rem	FC-2	Required to mitigate potential radiological release > 5 rem
TL DC transfer cart	PU-CR-112	Unsealed WP slapdown from transfer cart in ATS or DCHS	FC-1 (or UBC)[4]	Mitigated dose less than 5 rem; credit for confinement, otherwise FC-2	FC-2	Prevent unsealed WP slapdowns
TL DC transfer cart	PC-CR-111	Unsealed WP slapdown from transfer cart in CTS or DCHS	FC-1 (or UBC)[4]	Mitigated dose less than 5 rem; credit for confinement, otherwise FC-2	FC-2	Prevent unsealed WP slapdowns
mpty DC transfer cart	PD-CR-101	None identified	UBC	No safety issue	UBC	No safety issue
CHS controls & tracking	N/A	Uncontrolled motion damages fuel in unsealed WP, breaches sealed WP, or breaches bldg. confinement	FC-1 (or UBC)[4]	Mitigated dose less than 5 rem; credit for confinement, otherwise FC-2	FC-2	Prevent unsealed WP drops, slapdowns and collisions
ransfer Cart Rail	N/A	Unsealed WP slapdown from transfer cart	FC-1 (or UBC)[4]	Mitigated dose less than 5 rem; credit for confinement, otherwise FC-2	FC-2	Prevent unsealed WP slapdowns and collisions
C Cell Bridge Crane (85 Ton)	PD-CN-100	Unsealed WP drop from bridge crane onto floor	FC-1 (or UBC)[4]	Mitigated dose less than 5 rem; credit for confinement, otherwise FC-2	FC-2	Prevent unsealed WP drops
C Cell Bridge crane - rails and supports	PD-CN-100	Crane falls onto unsealed WP	FC-1 (or UBC)[4]	Mitigated dose less than 5 rem; credit for confinement, otherwise FC-2	FC-2	Prevent heavy mass falling onto unsealed WP
C Transfer Corridor Bridge Crane (50 Ton)	PD-CN-103	Crane falls onto floor of maintenance bay	UBC	No safety issue	UBC	No safety issue
C Lifting Collar	PD-FX-117	Unsealed WP drop from bridge crane onto floor	FC-1 (or UBC)[4]	Mitigated dose less than 5 rem; credit for confinement, otherwise FC-2	FC-2	Prevent unsealed WP drops
C Lifting Yoke	PD-FX-100	Unsealed WP drop from bridge crane onto floor	FC-1 (or UBC)[4]	Mitigated dose less than 5 rem; credit for confinement, otherwise FC-2	FC-2	Prevent unsealed WP drops
C Base Collar	PD-FX-118	None identified	UBC	No safety issue	UBC	No safety issue
C Cell Crane Maint. Shield Door	PD-DD-106	None identified	UBC	No safety issue	UBC	No safety issue
C Cell Crane Maint. Access Hatch	PD-HA-101A&B	None identified	UBC	No safety issue	UBC	No safety issue
C Cell Transfer Hatch	PD-HA-100A&B	None identified	UBC	No safety issue	UBC	No safety issue
ner Lid Sealing Assembly	PU-FX-119	None identified	UBC	No safety issue	UBC	No safety issue
/elding Station Jib Crane (4 Ton)	PD-CN-102A-D	Jib crane falls onto unsealed WP and damages fuel	UBC	Insufficient mass to cause release which exceeds 5 rem at site boundary	UBC	Insufficient mass to cause release which exceeds 5 rem at site boundary
C Welding Station Turntable	PD-ME-102A-H	Turntable stops rotating and burnthrough occurs	FC-1 (or UBC)[4]	Mitigated dose less than 5 rem; credit for confinement, otherwise FC-2	FC-2	Prevent welding burnthrough
C Welding/Inspection Robot	PD-ME-101A-H	Welding robot malfunctions and burnthrough occurs	FC-1 (or UBC)[4]	Mitigated dose less than 5 rem; credit for confinement, otherwise FC-2	FC-2	Prevent welding burnthrough
C Welding Station Gantry Crane (0.5 Ton)	PD-CN-101A-H	Welding gantry crane falls onto unsealed WP and damages fuel	UBC	Insufficient mass to cause release which exceeds 5 rem at site boundary	UBC	Insufficient mass to cause release which exceeds 5 rem at site boundary
C Welding Station Shield Door	PD-DO-100A-H	None identified	UBC	No safety issue	UBC	No safety issue
C Inerting Manifold	PD-PV-100A-H	None identified	UBC	No safety issue	UBC	No safety issue
C Outer Lid Lifting Fixture	PD-FX-102	None identified	UBC	No safety issue	UBC	No safety issue
C Tilting Fixture	PD-FX-103	Tilting fixture collapses and DC slapdown occurs	FC-1 (or UBC)[4]	Sealed WPs designed to withstand slapdown	FC-1 (or UBC)[4]	Sealed WPs designed to withstand slapdown
C Tilting Fixture Manipulator	PD-EM-100	Tilting fixture manipulator falls onto sealed WP	UBC	Insufficient mass to breach sealed WP	UBC	Insufficient mass to breach sealed WP
P Horizontal Transfer Cart	PD-CR-100	sealed WP falls off horizontal transfer cart	UBC	sealed WPs designed to withstand slapdown	UBC	sealed WPs designed to withstand slapdown
C Cell Exit Shield Door	PD-DO-101	None identified	UBC	No safety issue	UBC	No safety issue
oaded DC Staging						
oof; walls	N/A	Concrete mass falls onto loaded DCs	FC-2	Potential for radiological release > 5 rem	FC-2	Potential for radiological release > 5 rem
/AC Structural Supports	N/A	Collapse of HVAC structural supports	FC-2	Required to mitigate potential radiological release > 5 rem	FC-2	Required to mitigate potential radiological release > 5 rem
C Staging Fixture	PD-FX-101	Staging fixture collapses and DC slapdown occurs	FC-1 (or UBC)[4]	If fixtures fail, mitigated offsite dose between 100 mrem and 5 rem	FC-1	If fixtures fail, mitigated offsite dose between 100 mrem and 5 rem
C Transfer/Decon						
oof; walls	N/A	Concrete mass falls onto sealed WP	FC-2	Potential for radiological release > 5 rem	FC-2	Potential for radiological release > 5 rem
/AC Structural Supports	N/A	Collapse of HVAC structural supports	FC-2	Required to mitigate potential radiological release > 5 rem	FC-2	Required to mitigate potential radiological release > 5 rem
P Decon Sample Pass-Thru	PD-FT-100	None identified	UBC	No safety issue	UBC	No safety issue
P Horizontal Lifting System	PD-HI-100	Horizontal lifting system drops horizontal DC onto hard surface	FC-1 (or UBC)[4]	sealed WPs designed to withstand drop from normal operating lift height	FC-1 (or UBC)[4]	sealed WPs designed to withstand drop from normal operating lift height
P Horizontal Lifting System - rails and pports	N/A	Lift system falls onto DC	FC-1 (or UBC)[4]	Mitigated dose less than 5 rem; credit for confinement, otherwise FC-2	FC-2	Prevent heavy mass falling onto and breaching sealed WP
P Decon/Inspection Manipulator	PD-EM-101A&B	Manipulator falls onto sealed WP	UBC	Insufficient mass to breach sealed WP	UBC	Insufficient mass to breach sealed WP
P Decon Device	PD-DC-100A&B	Decon device falls onto sealed WP	UBC	Insufficient mass to breach sealed WP	UBC	Insufficient mass to breach sealed WP
C Transporter Load						
oof, walls	N/A	Concrete mass falls onto sealed WP	FC-2	Potential for radiological release > 5 rem	FC-2	Potential for radiological release > 5 rem
/AC Structural Supports	N/A	Collapse of HVAC structural supports	FC-2	Required to mitigate potential radiological release > 5 rem	FC-2	Required to mitigate potential radiological release > 5 rem
P Airlock Isolation Door	PD-DD-103	Fail to maintain building confinement	FC-1 (or UBC)[4]	Maintain confinement for cell and waste handling building	FC-1 (or UBC)[4]	Maintain confinement for cell and waste handling building

Notes:
1 FC-1 = Frequency Category 1 based on offsite dose between 100 mrem and 5 rem;
FC-2 = Frequency Category 2 based on offsite dose greater than 5 rem;
UBC = Uniform building Code based on offsite dose less than 100 mrem;
FC-(w) = required Frequency-Category-1 because of worker dose;
FC-1(d) = elective Frequency-Category-1 for defense-in-depth
2 Confinement strategy takes credit for HVAC system and assumes HEPA filters mitigate the release
3 Prevention strategy focuses on preventing radiological releases by seismically qualifying any SSCs that interact with spent fuel; and assumes no credit for mitigating features (e.g., HEPA filter)
4 Assigned FC-1 for defense-in-depth; may be downgraded to UBC based solely on dose consequence

Table 7-9 Seismic Classification of SSCs for Subsurface Facility (Emplacement Side)

Location/Equipment	SSC Seismic Failure	Seismic Frequency Category [1]	VA Design Basis or Design Assumption
Waste Emplacement System			
Transporter Locomotives-general	Derail; tip over; initiate fire; pull transporter along (see transporter); loss of wheels/carriage - abrupt stop	FC-1 (or UBC)[2]	No release-within design basis of WP
Transporter Locomotives-drive & power systems	Initiate uncontrolled motion; fail to provide dynamic braking in descent	FC-1 (or UBC)[2]	Potential release > 10 CFR 20; no release if impact limiter for WP or maximum impact within design basis of WP
Transporter Locomotives-control & communication/on board	Initiate uncontrolled motion; failure of on-board &/or communication to secondary locomotive &/or central control	FC-1 (or UBC)[2]	Potential release > 10 CFR 20; no release if impact limiter for WP or maximum impact within design basis of WP
Transporter Locomotives-brake mechanical, air, & controls	Failure to control descent speed; Could be common-cause failure with failure of drive/dynamic braking of loco & with transporter car, etc.	FC-1 (or UBC)[2]	Potential release > 10 CFR 20; no release if impact limiter for WP or maximum impact within design basis of WP
Transporter Locomotives-interconnection to transporter car	Loss of hard-wire connection of control and air & hydraulic lines to transporter brakes airline but expect no loss of braking on transporter on loss of fluids; loss of tractive force for transporter in up grades	FC-1 (or UBC)[2]	No release if just derailment; Potential release > 10 CFR 20 but mechanism for brake failure due to loss of air may be physically impossible; also, no release if impact limiter for WP or maximum impact within design basis of WP
Transporter Car -general	Derail; tip over; eject waste package; loss of biological shield in tipover; fire in neutron shield	FC-1 (or UBC)[2]	No release-within design basis of WP; worker dose from direct radiation
Transporter Car -brake mechanical & air	Failure to control descent speed; Could be common-cause mechanical failures with failure of drive/dynamic braking of loco & with transporter car, etc.	FC-1 (or UBC)[2]	Potential release > 10 CFR 20; no release if impact limiter for WP or maximum impact within design basis of WP
Transporter Car -door/reusable railcar drives & controls	Eject waste package during transport	FC-1 (or UBC)[2]	No release if impact limiter or within design basis of WP; potential dose to workers
Transporter Car -reusable railcar restraint/fasteners	Eject waste package during transport; railcar rolls into drift; drops waste package; damages gantry &/or shadow shield	FC-1 (or UBC)[2]	No release-within design basis of WP; worker dose from direct radiation
Transporter Car -radiation shield and doors	Loss of biological shield	FC-1	Potential dose to workers - direct radiation
Transporter Car -carriage	Derail; tip over; loss of wheels/carriage - abrupt stop	FC-1	Direct interaction with unshielded waste package; no release in drop within design basis of WP; potential dose to workers in recovery
Emplacement gantry - general	Derails - drops WP; derails - impacts emplaced WP	FC-1	Direct interaction with unshielded waste package; no release in drop within design basis of WP; potential dose to workers in recovery
Emplacement gantry - structure	Drop WP; jam/misalign WP while lift/lower/carry	FC-1	Direct interaction with unshielded waste package; no release in drop within design basis of WP; potential dose to workers in recovery
Emplacement gantry - lifting mechanisms	Drop WP; jam/misalign WP while lift/lower/carry	FC-1	Direct interaction with unshielded waste package; no release in drop within design basis of WP; potential dose to workers in recovery
Emplacement gantry - control/communication on board	Initiate uncontrolled movement in drift; uncontrolled raise./lower WP; drop WP	FC-1	Direct interaction with unshielded waste package; no release in drop within design basis of WP; potential dose to workers in recovery
Rail System			
Rails - main drifts & North Ramp	Buckle; deform; cause derailment transporter	FC-1 (or UBC)[2]	No release-within design basis of WP
Switches (switchtracks) & instrumentation/controls	Deform; change state; cause derailment transporter	FC-1 (or UBC)[2]	No release-within design basis of WP
Rails- emplacement drifts	Buckle; deform; cause derailment gantry; impact or puncture of waste package(s)	FC-1	No release if drop & puncture forces within design basis of WP; need to verify
Ground Support System			
Inverts - Main Drifts	Induce distortion of rails, cause derailment of transporter	FC-1 (or UBC)[2]	No release-within design basis of WP
Inverts - Main Drifts	Lose base of ground support ring structure	FC-1 (or UBC)[2]	No release if maximum impact within design basis of WP; potential worker dose from direct radiation; unable to perform cleanup or EQ recovery until re-excavation/construction

Table 7-9 Seismic Classification of SSCs for Subsurface Facility (Emplacement Side)

Location/Equipment	SSC Seismic Failure	Seismic Frequency Category [1]	VA Design Basis or Design Assumption
Ground support - main drifts & North Ramp	Fall of moderately large mass of structural steel &/or rocks onto transporter; loss of biological shield; potential impact on waste package	FC-1 (or UBC)[2]	No release if maximum rockfall/steel impact within design basis of WP; potential worker dose from direct radiation; unable to perform cleanup or EQ recovery until re-excavation/construction
Ground support - main drifts & North Ramp	Widespread rockfall; Loss of access/passage of large regions of emplacement areas	FC-1 (or UBC)[2]	No release or loss of biological shielding – disruption of throughput; unable to perform cleanup or EQ recovery until re-excavation/construction
Inverts - Emplacement Drifts	Induce distortion of rails, cause derailment of emplacement gantry; thrust rails to potential puncture WP	FC-1	Has same seismic criteria as gantry structure; but no release if drop & puncture forces within design basis of WP
Ground support - Emplacement Drifts	Fall of rocks of various sizes onto virtually all waste packages in emplacement	FC-1 (or UBC)[2]	No release if largest rockblock within design basis of WP; otherwise, potential wide-spread common-cause breach of all emplaced WPs
Ground support - Ventilation Drift	Widespread rockfall; Induced failure of ducts & supports; Loss of ventilation flow; Loss of access/passage for restoration	FC-1 (or UBC)[2]	No release; no loss of required mitigation; Loss of ventilation cooling of emplacement drifts; loss of personnel air supply; disruption of radiation and environmental monitoring systems; failure of electrical/communication cabling
Ventilation System			
Ducts - in ventilation drift	Breakup, collapse - Potential loss of all flow paths of all ducts; common-cause failure	FC-1 (or UBC)[2]	No release; no loss of essential critical mitigation; loss of preferred ventilation flow in event of release during emplacement; loss of ventilation cooling of emplacement drifts; loss of personnel air supply;
Duct supports - in ventilation drift	Allow ducts to fall - Potential loss of all flow paths of all ducts; common-cause failure	FC-1 (or UBC)[2]	No release; no loss of essential critical mitigation; loss of preferred ventilation flow in event of release during emplacement; loss of ventilation cooling of emplacement drifts; loss of personnel air supply; loss of emplacement drift air monitoring; no extreme exposure to repair/replace
Ducts - in raises from emplacement drifts	Breakup, collapse - Potential loss of all flow paths of all ducts; common-cause failure	FC-1 (or UBC)[2]	No release; no loss of essential critical mitigation; loss of preferred ventilation flow in event of release during emplacement; loss of ventilation cooling of emplacement drifts; loss of personnel air supply; loss of emplacement drift air monitoring ; high-exposure to repair/replace
Duct supports - in raises from emplacement drifts	Allow ducts to fall - Potential loss of all flow paths of all ducts; common-cause failure	FC-1 (or UBC)[2]	No release; no loss of essential critical mitigation; loss of preferred ventilation flow in event of release during emplacement; loss of ventilation cooling of emplacement drifts; loss of personnel air supply; loss of emplacement drift air monitoring ; high-exposure to repair/replace
Diversion valves - emplacement raises	Blocks flow from all emplacement drifts	FC-1 (or UBC)[2]	No release; no loss of essential critical mitigation; loss of ventilation cooling of emplacement drifts; loss of personnel air supply; potential interaction with air monitoring; no undue exposure to repair/replace
Air monitoring - tubing, instruments, power	Loss of monitorability of emplacement drift	FC-1	No release - no loss of mitigation; Loss of information on post-earthquake conditions
Fans & motors & control system (+ communication to central control)	Loss of ventilation flow; loss of filtration	FC-1 (or UBC)[2]	No release, no loss of essential mitigation.; loss of preferred ventilation flow in event of release during emplacement. Stagnation of air, potential retention of particulates in subsurface (but, loss of filtration if needed to mitigate doses)
(Electrical supply)	Loss of ventilation flow; loss of filtration	FC-1 (or UBC)[2]	No release, no loss of essential mitigation.; loss of preferred ventilation flow in event of release during emplacement. Stagnation of air, potential retention of particulates in subsurface (but, loss of filtration if needed to mitigate doses)
Diversion valves - to HEPA filters (if installed)	Loss of filtration	FC-1 (or UBC)[2]	No release, no loss of essential mitigation. Stagnation of air, potential retention of particulates in subsurface (but, loss of filtration if needed to mitigate doses)
Emplacement drift isolation doors - structure	Open - disrupt preferred cooling	FC-1 (or UBC)[2]	No immediate release, no loss of essential mitigation. loss of preferred ventilation flow in event of release during emplacement. Potential consequential release or compromise of waste isolation, if rapid cooldown affects WP integrity

Table 7-9 Seismic Classification of SSCs for Subsurface Facility (Emplacement Side)

Location/Equipment	SSC Seismic Failure	Seismic Frequency Category [1]	VA Design Basis or Design Assumption
Emplacement drift isolation doors - actuator & controls	Open - disrupt preferred cooling	FC-1 (or UBC)[2]	No immediate release, no loss of essential mitigation. loss of preferred ventilation flow in event of release during emplacement. Potential consequential release or compromising waste isolation, if rapid cooldown affects WP integrity
Rail Electrification System			
Transporter locomotives - motive & controls	Loss of power to transporter locomotives - motive & controls	UBC	Stall; no motion until restoration of power (unless backup power); no release or loss of mitigation; potential uncontrolled motion if surge on power restoration
Transporter car - doors & reusable railcar drives	Loss of power to transporter car - doors & reusable railcar drives	FC-1	Halt of operation in loading/unloading transporter; need to resume safe operation after earthquake; potential worker dose from direct radiation during recovery actions
Emplacement gantry - motive & lifting	Loss of power to emplacement gantry - motive & lifting	FC-1	Halt of operation in loading/unloading transporter; need to resume safe operation after earthquake; potential worker dose from direct radiation during recovery actions
Emplacement gantry - controls & communication	Loss of power to emplacement - controls & communication	FC-1	Halt of operation in loading/unloading transporter; need to resume safe operation after earthquake; potential worker dose from direct radiation during recovery actions
Emplacement drift isolation doors - position monitors; motive power	Loss of power - stall, jamming	FC-1	Halt of operation in loading/unloading transporter; need to resume safe operation after earthquake; potential worker dose from direct radiation during recovery actions
Rail system - switches & signals	Loss of power - loss of control & signals	FC-1 (or UBC)[2]	Failure to change state of switch in timely manner; Remain failed upon restoration of power -induce derailment but no release; loss of switch position indication;
Overhead trolley supply cable & supports	Collapse; sparks; initiate fire in transporter car	UBC	No release unless fire exceeds design basis of WP; no loss of mitigation; potential electrocution of workers; halt of transport but not essential for safe operations
Rectifier for DC supply to trolley cables	Break loose, collide with transporter train; fire; loss of power to emplacement operations	FC-1	No release unless fire exceeds design basis of WP; no loss of mitigation; potential electrocution of workers; need to resume safe emplacement operations after earthquake
Backup diesel-generator (if provided)	Fail to start & run after EQ; loss of backup power	FC-1	No release unless WP handling operation not completed properly and causes impact > design basis of WP; no loss of mitigation unless power essential
Backup battery pack (if provided)	Fail to supply power after EQ; fire initiated; acid spill	FC-1	No release unless WP handling operation not completed properly and causes impact > design basis of WP; potential worker dose in recovery operations; no loss of mitigation; fire unlikely to affect WP; fire & acid personnel hazards
Radiation Monitoring Systems			
Detectors, transmitters, amplifiers, alarms	Loss of indications	FC-1	No release; no loss of mitigation; potential loss of indications of radiation leaks
Communication System - General			
Radio, telephone, video cameras & lights	Loss of communications - general & essential	UBC	No release; no loss of mitigation; potential loss of essential communication for personnel safety & post earthquake accident management
Lighting			
General lighting	loss of lights	UBC	Emergency lighting available; need to demonstrate no interaction with emergency system
Emergency lighting	Loss of essential lighting	FC-1 (or UBC)[2]	No release; no loss of mitigation; potential loss of essential lighting personnel safety & post-earthquake accident management; minimal drift emergency lighting and supports/batteries withstand FC-2

Table 7-9 Seismic Classification of SSCs for Subsurface Facility (Emplacement Side)

Location/Equipment	SSC Seismic Failure	Seismic Frequency Category [1]	VA Design Basis or Design Assumption
Control & Communication System-Remote			
Control of locomotives - remote	Initiate uncontrolled motion; common-cause failures of on-board &/or communication to secondary locomotive &/or central control	FC-1 (or UBC)[2]	No release in derailment or runaway if impact limiter for WP or maximum impact within design basis of WP
Control of emplacement gantry - remote	Initiate uncontrolled motion; spurious lifts or drops of waste packages	FC-1	No release, drops within design basis of WP but direct handling of unshielded waste package; potential dose to workers in recovery & repair
Video & voice communications	Loss of visual information in drifts; loss of voice communication with personnel	FC-1 (or UBC)[2]	No release; no loss of mitigation; potential loss of information affecting personnel safety & post-earthquake accident management (minimal video and communications to be FC-2)
Central Control Room			
Transport/Emplacement activities	see Control & Communications - uncontrolled motion/action of transporter locomotive &/or emplacement gantry	FC-1	Emplacement gantry handles unshielded waste packages
General	Loss of all essential instrumentation, control & communication to subsurface equipment	FC-1	No release; no loss of mitigation; potential loss of essential communication for personnel safety & post earthquake accident management
Fire Water			
Piping from surface through drifts	Pipe rupture	UBC (or FC-1 if adverse interaction)	No release; no loss of mitigation; depending on geometrical arrangement: localized flooding; potential spray interaction with electrical supply, instrumentation & communication to emplacement equipment, essential communication for personnel safety & post-earthquake accident management
Pipe supports	Pipe segment fall onto rails, or onto electrical, communication, or instrumentation components	UBC (or FC-1 if adverse interaction)	No release; no loss of mitigation; depending on geometric arrangement : consequential pipe break with localized flooding; potential physical impact of pipe and/or spray interaction with electrical supply, instrumentation & communication, essential communication for personnel safety & post-earthquake accident management

Notes:
(1) FC-1 = Frequency Category 1 based on offsite dose between 100 mrem and 5 rem;
FC-2 = Frequency Category 2 based on offsite dose greater than 5 rem;
UBC = Uniform building Code based on offsite dose less than 100 mrem;
FC-1(w) = required Frequency-Category-1 because of worker dose;
FC-1(d) = elective Frequency-Category-1 for defense-in-depth
(2) Assigned FC-1 for defense-in-depth; may be downgraded to UBC based solely on dose consequence

Table 7-10 Dose Bases for Seismic Classification of Subsurface SSCs

Basic Dose Calculations for Bounding Waste Packages in Subsurface Release Scenarios

Location/Activity	Equipment	Potential DBE	Number of Fuel Assemblies	Offsite Dose (rem) per Waste Package, without HVAC
Rockfall in emplacement drift	PWR 21 SFA	Best estimate release	21	0.10
Rockfall in emplacement drift	PWR 21 SFA	Conservative	21	>5
Rockfall in emplacement drift	BWR 44 SFA	Best estimate release	44	0.39
Rockfall in emplacement drift	BWR 44 SFA	Conservative	44	>5
Rockfall in emplacement drift	DHLW 5 canisters (Savannah River)	Conservative	5	>5
Rockfall in emplacement drift	DOE SNF	N/A	N/A	N/A
Runaway transporter	PWR 21 SFA	Best estimate release	21	1.10
Runaway transporter	PWR 21 SFA	Conservative	21	>5
Runaway transporter	BWR 44 SFA	Best estimate release	44	2.00
Runaway transporter	BWR 44 SFA	Conservative	44	>5

Population of Waste Package Types When MGR is Full	Maximum Number of Fuel Assemblies Present	Maximum Dose if All WPs Breached - Conservative	Dose (rem)
21 PWR	4239	Number WPs x dose per 21 PWR WP	>>5
12 PWR	553	Number WPs x dose per 21 PWR WP x 12/21	>>5
44 BWR	2826	Number WPs x dose per 44 BWR WP	>>5
24 BWR	49	Number WPs x dose per 44 BWR WP x 24/44	>>5
DHLW	1663	Number WPs x dose per DHLW WP	>>5
DOE SNF	883	Number WPs x dose per 21 PWR WP (scoping)	>>5
		Total Maximum Potential Offsite Dose	>>>5

Table A.19-6 Rev. 1

Control Room HVAC System Reliability Data

(Page 2 of 4)

EVENT NAME	DESCRIPTION	FAILURE RATE	FACTOR	PROBABILITY
VVCDD01DMO	Damper CR-D-1 Fails To Open On Demand	4.00E-03 N	1 N	4.00E-03
VVCDD01DMT	Damper CR-D-1 Spurious Operation	2.70E-07 H	24 H	6.48E-06
VVCDD02DMO	Damper CR-D-2 Fails To Open On Demand	4.00E-03 N	1 N	4.00E-03
VVCDD02DMT	Damper CR-D-2 Spurious Operation	2.70E-07 H	564 H	1.52E-04
VVCDD03DMO	Damper CR-D-3 Fails To Open On Demand	4.00E-03 N	1 N	4.00E-03
VVCDD03DMT	Damper CR-D-3 Spurious Operation	2.70E-07 H	564 H	1.52E-04
VVCAHU1FNR	Fan CR-AHU-1 Fails To Run For The Required Time	1.00E-05 H	24 H	2.40E-04
VVCAHU1FNS	Fan CR-AHU-1 Fails To Start On Demand	6.00E-04 N	1 N	6.00E-04
VVCAHU2FNR	Fan CR-AHU-2 Fails To Run For The Required Time	1.00E-05 H	24 H	2.40E-04
VVCAHU2FNS	Fan CR-AHU-2 Fails To Start On Demand	6.00E-04 N	1 N	6.00E-04
VVCAHUCCOM	Common Cause Failure Of Control Room AHU Fans to Run		2.40E-05	2.40E-05
VVCCR1XRTT	Relay CR1X (Smoke Detector Relay) Transfers Position	1.00E-06 H	24 H	2.40E-05
VVCRA41RTO	Relay 1LRA4X1 Fails To Operate On Demand	1.00E-04 N	1 N	1.00E-04
VVCRA41RTT	Relay 1LRA4X1A Spurious Operation	1.00E-06 H	24 H	2.40E-05
VVCTRNBTRM	VC Train B in Maintenance		2.76E-02	2.76E-02
VVC0009VVT	Manual Valve 1VC9 Transfers Closed	3.70E-08 H	24 H	8.88E-07
VVC0013CVO	Check Valve 1VC13 Fails to Open	2.00E-04 N	1 N	2.00E-04
VVC0013CVT	Check Valve 1VC13 Transfers Closed	2.00E-07 H	24 H	4.80E-06
VVC0014CVO	Check Valve 1VC14 Fails to Open	2.00E-04 N	1 N	2.00E-04
VVC0014CVT	Check Valve 1VC14 Transfers Closed	2.00E-07 H	24 H	4.80E-06
VVC0015VVT	Manual Valve 1VC15 Transfers Closed	3.70E-08 H	24 H	8.88E-07
VVC0025VVT	Manual Valve 1VC25 Transfers Closed	3.70E-08 H	24 H	8.88E-07
VVC0026VVT	Manual Valve 1VC26 Transfers Closed	3.70E-08 H	564 H	2.09E-05
VVC0028VVT	Manual Valve 1VC28 Transfers Closed	3.70E-08 H	24 H	8.88E-07
VVC0029VVT	Manual Valve 1VC29 Transfers Closed	3.70E-08 H	24 H	8.88E-07
VVC0036VVT	Manual Valve 1VC36 Transfers Closed	3.70E-08 H	564 H	2.09E-05
VVC0041VVT	Manual Valve 1VC41 Transfers Closed	3.70E-08 H	564 H	2.09E-05

CATAWBA PRA DATA ; PAGE 1 of 2

DATA

Three Data sheets are attached.

- Run failure rate on AHU
- Start Failure on Demand for AHU
- And Latent Human Error probability of Operator causing a bypass of an airlock system. Used for BYPASSLHE event

The run failure rate is used to derive a common cause failure rate using an assumed beta of 0.1.

Mission time is assumed to be 24 hours.

Maintenance unavailability is based on run failure rate with a 72 hour repair time

$$\frac{TR}{\frac{1}{\lambda}+TR}=\frac{72}{\frac{1}{9.09E-06}+72}=6.54E-04$$

The maintenance is doubled on the standby train to account for either train being in standby. Thus the maintenance UA of the standby train is 1.31E-03.

CATAWBA PRA DATA, PAGE 2 OF 2

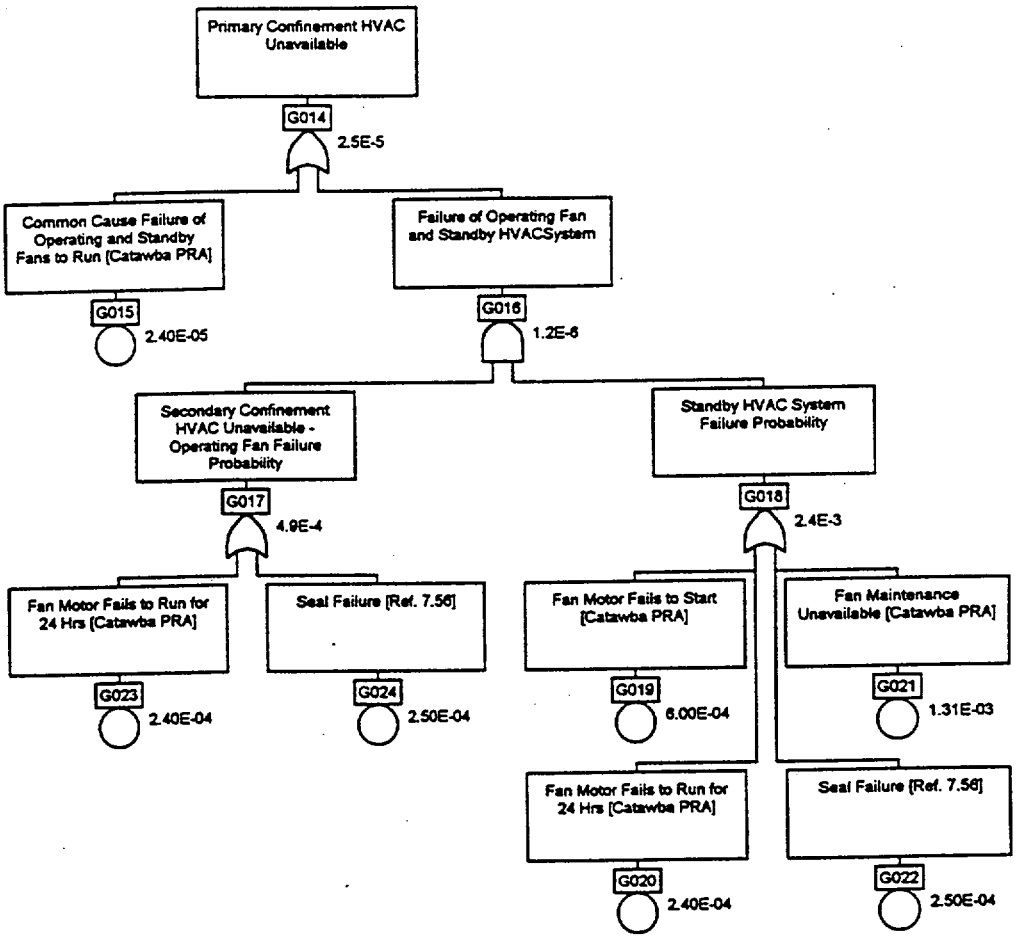
Primary Confinement HVAC Unavailable
G014
2.5E-5
Common Cause Failure of Operating and Standby Fans to Run [Catawba PRA]
G015
2.40E-05
Failure of Operating Fan and Standby HVACSystem
G016
1.2E-6
Secondary Confinement HVAC Unavailable - Operating Fan Failure Probability
G017
4.9E-4
Standby HVAC System Failure Probability
G018
2.4E-3
Fan Motor Fails to Run for 24 Hrs [Catawba PRA]
G023
2.40E-04
Seal Failure [Ref. 7.56]
G024
2.50E-04
Fan Motor Fails to Start [Catawba PRA]
G019
6.00E-04
Fan Maintenance Unavailable [Catawba PRA]
G021
1.31E-03
Fan Motor Fails to Run for 24 Hrs [Catawba PRA]
G020
2.40E-04
Seal Failure [Ref. 7.56]
G022
2.50E-04

Attachment IX - Dose Calculation Data

1.0 Purpose

The purpose of this attachment is to provide the equations and additional data required to reproduce the results of the dose calculations provided in the report text. The Best Estimate doses presented in Attachment IV for events ATS001 and ATS003 will be reproduced as an example.

The spreadsheet for the calculation of radiological doses was created in Lotus 1-2-3 Release 5 and runs under the Windows 95 operating system. The inhalation and submersion dose calculation spreadsheets are based on Equations IX-1 through IX-4 and calculate offsite (i.e., 5,000 meter) doses for each organ and the whole body for a ground-level radiological release.

2.0 Equations

2.1 Inhalation Dose Calculations

The equation used to calculate the inhalation dose to organ J from radionuclide group K is as follows:

$$D_{J,K}(I) = [S_{J,K}(I) * N] * RF_K * MF_K * BR * [\chi/Q]_R \qquad \text{(IX-1)}$$

where

$D_{J,K}(I)$	=	inhalation dose that organ J receives as a result of the exposure to the radionuclide group K (rem)
N	=	number of fuel assemblies or canisters that are breached (dimensionless)
RF_K	=	release fraction for radionuclide group K, defined as the fraction of the radionuclides present in the waste form that are released to the environment during the event (dimensionless)
MF_K	=	mitigating factors that reduce the exposure at the site boundary for radionuclide group K; these can be filtration by HEPA filters or other mitigation systems (dimensionless)
BR	=	breathing rates of the standard adult person during the event (m^3/sec)
$[\chi/Q]_R$	=	atmospheric dispersion coefficient at site boundary distance R for assumed meteorological conditions and duration of release (sec/m^3)
$S_{J,K}(I)$	=	inhalation source term for organ J from radionuclide group K (rem per fuel assembly or canister)

2.2 Submersion Dose Calculations

The equation used to calculate the submersion dose is as follows:

$$D_{J,K}(S) = [S_{J,K}(S) * N] * RF_K * MF_K * [\chi/Q]_R \qquad \text{(IX-2)}$$

where

$S_{J,K}(S)$	=	submersion source term for organ J from radionuclide group K (rem/sec per FA/m^3 or rem/sec per canister/m^3)
$D_{J,K}(S)$	=	submersion doses that organ J receives as a result of the exposure to the radionuclide group K (rem)

2.3 Total Dose Calculations

The total dose to a given organ at various distances from the releases for each exposure pathway is calculated by summing over contributions from all radionuclide groups:

$$D_J(I) = \Sigma D_{J,K}(I), \text{ (sum over K, radionuclide groups); for J = 1 to 8} \quad \text{(IX-3)}$$

and

$$D_J(S) = \Sigma D_{J,K}(S), \text{ (sum over K, radionuclide groups); for J = 1 to 10} \quad \text{(IX-4)}$$

where

$D_J(I)$ = inhalation doses that organ J receives as a result of the exposure to all radionuclides released

and

$D_J(S)$ = submersion doses that organ J receives as a result of the exposure to all radionuclides released.

3.0 Sample Calculation

The dose calculation that follows represents the following scenario: 16.5-foot drop of a basket containing 4 PWR assemblies onto another basket of 4 PWR assemblies in the assembly drying station (from the maximum height from the dry assembly transfer machine assembly basket enclosure) with the 8 assemblies breached. HVAC particulate filtration is available with an efficiency of 3.0E-4. For the Best Estimate calculations, a fuel rod cladding failure probability of 0.10 was used.

The fuel types and fuel characteristics used in this calculation are 50% PWR with a burnup of 39,560 MWD/MTU, a 3.69% enrichment, and 25.9 years of decay for the Best Estimate calculation (see Table IX-1 of this attachment).

The radionuclides that contribute at least 99.9% of the dose for all organs are shown in Tables IX-1 and IX-2 for inhalation and external exposures, respectively. For the inhalation dose calculation, the radionuclides are combined into six radionuclide groups according to their similarity in chemical and/or physical characteristics. The sum of each group is shown in Table IX-3.

3.1 Inhalation Dose Calculation

The dose contribution to each organ and the whole body from each radionuclide group is calculated and then summed per Equation IX-1. The inhalation dose due to a release from 50% PWR fuel from the cesium group to the breast can be found as follows:

1. The cesium group 50% PWR source term for the breast is found in Table IX-3, Column (A2) as 1.04E+9 rem/FA (inserted in Column (1) of Table IX-4 page 2).

2. The number of 50% PWR assumed to be damaged is 8. This value appears in Column (2) of Table IX-4 page 2.

3. The release fraction for cesium is calculated as follows. See Section 2.2.2 of this report for the gap release fraction and Section 2.2.3 of this report for a description of the PULF fraction.

   [Gap Release Fraction + PULF Fraction] x 50% PWR Failure Fraction
   or (2.3E-5 + 1.97E-5) x 1.0E-1 = 4.27E-6

   The release fraction appears in Column (3) of Table IX-4 page 2.

4. The mitigation factor for the 50% PWR drop DBE is 3.0E-4 (HEPA filtration) and is shown in Column (4) of Table IX-4 page 2.

5. The breathing rate is 3.3E-4 m^3/sec in Column (5) of Table IX-4 page 2.

6. The atmospheric dispersion factor for a restricted boundary with ground release and no depletion for 5,000 meters is 1.44E-5 sec/m^3 (see Column (10) of Table IX-4 page 2).

7. The product of the six factors above is the potential dose to the breast from the cesium group at a 5,000-meter restricted area boundary from an 8-assembly drop of 50% PWR fuel assemblies:

   D = (1.04E+9) x (8) x (4.27E-6) x (3.0E-4) x (3.30E-4) x (1.44E-5)

   = 5.09E-8 rem (to the breast from the cesium group)

   The dose is calculated in Column (11) on Table IX-4 page 2 using Equation (IX-1).

Columns (1) through (3) of Table IX-4, page 10 present the inhalation doses to all organs from 50% PWR, summed over radionuclide groups for a ground release at 5,000 meters. For example, the totals of Columns (7), (9), and (11) of Table IX-4 page 2, respectively, show the total calculated breast doses from all isotopes due to a 50% PWR drop at three distances. These values are related within the LOTUS 1-2-3 model to Columns (1), (2), and (3) of Table IX-4, page 10.

3.2 Submersion Dose Calculation

The dose contribution to each organ and the whole body including the lens of the eye and the skin from each radionuclide group is calculated and then summed per Equation IX-2. The submersion dose is calculated for PWR and BWR fuels only; there are no isotopic releases from the DHLW applicable to submersion dose calculations.

The submersion dose to the whole body can be found as follows (see numbers in column headings of Table IX-4, page 9):

1. The PWR 50% source term per fuel assembly for the whole body is found in Column (3), Table IX-4, page 9 as 6.58E-1 rem/sec per FA/m^3, and is transcribed to Column (1) of Table IX-4 page 9).

2. The number of 50% PWR fuel assemblies assumed to be damaged is 8. This value appears in Column (2) of Table IX-4 page 9.

3. Table IX-2 shows that Kr-85 contributes virtually the entire whole body submersion dose source term for the PWR 50% fuel. The release fraction for Kr-85 is 0.3, and is multiplied by 0.1 (i.e., fraction of breached fuel) to obtain the total release fraction (Column (3) of Table IX page 9).

4. The mitigation factor is 1.0 (Column (4) of Table IX-4 page 9).

5. The atmospheric dispersion factor for a ground release at 5000 m is 1.44E-05 sec/m^3 (Column (9) of Table IX-4 page 9).

6. The product of the five factors above is the potential external dose to the whole body at a 5,000-meter restricted area boundary from an 8-assembly drop of 50% PWR fuel assemblies:

   D = 6.58E-01 rem-s^{-1}-FA^{-1}-m^3 x 8 FA x 3.0E-02 x 1.0 x 1.44E-5 sec/m^3
   = 2.28E-6 rem (to the whole body)

   The dose is calculated in Column (10) of Table IX-4 page 9.

3.3 Total Dose Calculation

Using Equation IX-3, the total inhalation doses to the breast for each radionuclide group at 5,000 meters are summed in Column (3) of Table IX-4 page 10. Using Equation IX-4, the submersion doses for the whole body at 5,000 meters are summed in Column (6) of Table IX-4 page 10. Column (9) of Table IX-4 page 10 sums the inhalation and submersion doses for all organs and the whole body.

3.4 Verification by Hand Calculation

Figure IX-1 shows the hand calculations performed to verify the sample calculation taken from events ATS001 and ATS003. The hand calculations show the same results as the Lotus 1-2-3 spreadsheet used for the ATS001 and ATS003 calculations.

Table IX-1. SOURCE TERM GROUPING INFORMATION

TOTAL POTENTIAL INHALATION AND EXTERNAL SOURCE TERMS FOR EACH WASTE FORM
Inhalation dose includes all nuclides which fall within the 99.9% cumulative dose for at least one organ. Tritium and I-129 have also been included, regardless of rank, per guidance in NUREG-1536.

10-Year PWR DBF* Inhalation Source Term

		rem/Fuel Assembly							
Group	Isotope	Gonad	Breast	Lung	R Marrow	B Surface	Thyroid	Remainder	Whole Body
cs	Cs-134	2.18E+08	1.82E+08	1.98E+08	1.98E+08	1.85E+08	1.87E+08	2.34E+08	2.11E+08
cs	Ru-106	1.41E+06	1.93E+06	1.13E+09	1.91E+06	1.75E+06	1.87E+06	1.30E+07	1.40E+08
cs	Cs-137	1.76E+09	1.58E+09	1.77E+09	1.67E+09	1.60E+09	1.59E+09	1.83E+09	1.74E+09
h	H-3	1.75E+04	1.75E+04	1.75E+04	1.75E+04	1.75E+04	1.75E+04	1.75E+04	1.75E+04
I	I-129	6.73E+00	1.62E+01	2.43E+01	1.08E+01	1.07E+01	1.21E+05	9.13E+00	3.63E+03
p	Pu-239	8.69E+09	2.89E+05	2.34E+11	4.76E+10	5.95E+11	2.72E+05	2.19E+10	6.04E+10
p	Pu-240	1.45E+10	5.24E+05	3.91E+11	7.95E+10	9.93E+11	4.55E+05	3.65E+10	1.01E+11
p	Pu-242	4.97E+07	1.90E+03	1.34E+09	2.72E+08	3.40E+09	1.62E+03	1.25E+08	3.45E+08
p	Pu-241	4.70E+10	3.64E+06	5.41E+11	2.43E+11	3.03E+12	1.56E+06	1.02E+11	2.28E+11
p	Sb-125	1.01E+06	1.17E+06	6.11E+07	1.51E+06	2.75E+06	9.12E+05	4.08E+06	9.29E+06
p	U-234	6.09E+03	6.16E+03	6.85E+08	1.66E+05	2.60E+06	6.09E+03	2.43E+05	8.23E+07
p	Pu-238	1.10E+11	4.64E+06	3.38E+12	6.12E+11	7.65E+12	4.07E+06	2.89E+11	8.22E+11
p	Am-241	1.25E+11	1.03E+07	7.09E+10	6.70E+11	8.36E+12	6.16E+06	3.01E+11	4.61E+11
p	Pm-147	1.28E+02	5.60E+02	1.20E+09	2.50E+07	3.13E+08	3.08E+02	2.43E+07	1.64E+08
p	Am-242m	1.54E+09	6.62E+04	2.02E+08	8.11E+09	1.02E+11	2.71E+04	3.59E+09	5.51E+09
p	Cm-243	1.30E+09	3.95E+05	1.22E+09	7.41E+09	9.23E+10	2.40E+05	3.62E+09	5.21E+09
p	Am-243	2.07E+09	9.67E+05	1.13E+09	1.10E+10	1.38E+11	5.27E+05	4.92E+09	7.59E+09
p	Cd-113M	4.47E+05	4.47E+05	3.87E+07	4.47E+05	4.47E+05	4.47E+05	1.76E+07	1.02E+07
p	Cm-244	1.29E+11	8.43E+06	1.56E+11	7.60E+11	9.48E+12	8.18E+06	3.87E+11	5.43E+11
p	Eu-155	1.69E+06	2.91E+06	5.64E+07	6.78E+07	7.20E+08	1.14E+06	5.26E+07	5.32E+07
p	Co-60	2.34E+07	9.06E+07	1.70E+09	8.47E+07	6.65E+07	7.98E+07	1.77E+08	2.91E+08
p	Eu-154	1.50E+08	1.98E+08	1.01E+09	1.36E+09	6.69E+09	9.14E+07	1.45E+09	9.89E+08
p	Y-90	7.15E+04	7.15E+04	1.29E+09	2.10E+06	2.09E+06	7.15E+04	5.35E+08	3.15E+08
sr	Sr-90	3.65E+08	3.65E+08	5.15E+08	4.64E+10	1.00E+11	3.65E+08	4.64E+08	8.94E+09

* DBF – Design Basis Fuel

Table IX-1. SOURCE TERM GROUPING INFORMATION (Continued)

TOTAL POTENTIAL INHALATION AND EXTERNAL SOURCE TERMS FOR EACH WASTE FORM
Inhalation dose includes all nuclides which fall within the 99.9% cumulative dose for at least one organ. Tritium and I-129 have also been included, regardless of rank, per guidance in NUREG-1536.

10-Year 100% Bounding PWR Inhalation Source Term

		rem/FA							
Group	Isotope	Gonad	Breast	Lung	R Marrow	B Surface	Thyroid	Remainder	Whole Body
cs	Cs-134	3.17E+08	2.64E+08	2.88E+08	2.88E+08	2.69E+08	2.71E+08	3.39E+08	3.06E+08
cs	Ru-106	1.84E+06	2.52E+06	1.47E+09	2.49E+06	2.28E+06	2.44E+06	1.70E+07	1.83E+08
cs	Cs-137	2.75E+09	2.46E+09	2.77E+09	2.61E+09	2.49E+09	2.49E+09	2.86E+09	2.71E+09
h	H-3	1.67E+04	1.67E+04	1.67E+04	1.67E+04	1.67E+04	1.67E+04	1.67E+04	1.67E+04
i	I-129	1.06E+01	2.56E+01	3.85E+01	1.71E+01	1.69E+01	1.91E+05	1.45E+01	5.75E+03
p	Pu-239	9.68E+09	3.22E+05	2.61E+11	5.30E+10	6.62E+11	3.02E+05	2.44E+10	6.72E+10
p	Pu-240	1.81E+10	6.52E+05	4.86E+11	9.89E+10	1.24E+12	5.66E+05	4.55E+10	1.25E+11
p	Pu-242	1.17E+08	4.47E+03	3.16E+09	6.43E+08	8.03E+09	3.82E+03	2.94E+08	8.15E+08
p	Pu-241	7.30E+10	5.66E+06	8.41E+11	3.78E+11	4.71E+12	2.42E+06	1.59E+11	3.54E+11
p	Sb-125	8.67E+05	1.00E+06	5.23E+07	1.29E+06	2.36E+06	7.80E+05	3.49E+06	7.95E+06
p	Pu-238	2.57E+11	1.09E+07	7.90E+12	1.43E+12	1.79E+13	9.53E+06	6.76E+11	1.92E+12
p	Am-241	2.01E+11	1.65E+07	1.14E+11	1.08E+12	1.34E+13	9.89E+06	4.83E+11	7.40E+11
p	Pm-147	1.80E+02	7.85E+02	1.69E+09	3.51E+07	4.38E+08	4.32E+02	3.40E+07	2.30E+08
p	Cm-243	3.03E+09	9.19E+05	2.84E+09	1.72E+10	2.15E+11	5.60E+05	8.42E+09	1.21E+10
p	Am-243	6.18E+09	2.88E+06	3.37E+09	3.28E+10	4.11E+11	1.57E+06	1.47E+10	2.26E+10
p	Cm-244	5.47E+11	3.58E+07	6.64E+11	3.23E+12	4.03E+13	3.48E+07	1.64E+12	2.31E+12
p	Eu-155	1.02E+06	1.76E+06	3.42E+07	4.11E+07	4.36E+08	6.89E+05	3.19E+07	3.22E+07
p	Eu-154	1.84E+08	2.43E+08	1.24E+09	1.66E+09	8.20E+09	1.12E+08	1.77E+09	1.21E+09
p	Y-90	1.02E+05	1.02E+05	1.84E+09	3.00E+06	2.98E+06	1.02E+05	7.65E+08	4.51E+08
sr	Sr-90	5.22E+08	5.22E+08	7.37E+08	6.64E+10	1.44E+11	5.22E+08	6.64E+08	1.28E+10

Table IX-1. SOURCE TERM GROUPING INFORMATION (Continued)

TOTAL POTENTIAL INHALATION AND EXTERNAL SOURCE TERMS FOR EACH WASTE FORM
Inhalation dose includes all nuclides which fall within the 99.9% cumulative dose for at least one organ. Tritium and I-129 have also been included, regardless of rank, per guidance in NUREG-1536.

50% PWR INHALATION SOURCE TERM

					rem/FA				
Group	Isotope	Gonad	Breast	Lung	R Marrow	B Surface	Thyroid	Remainder	Whole Body
cs	Cs-137	1.16E+09	1.04E+09	1.17E+09	1.10E+09	1.05E+09	1.05E+09	1.21E+09	1.14E+09
cs	Cs-134	5.64E+06	4.69E+06	5.12E+06	5.12E+06	4.78E+06	4.82E+06	6.04E+06	5.44E+06
h	H-3	8.71E+03	8.71E+03	8.71E+03	8.71E+03	8.71E+03	8.71E+03	8.71E+03	8.71E+03
i	I-129	5.63E+00	1.35E+01	2.03E+01	9.07E+00	8.94E+00	1.01E+05	7.64E+00	3.04E+03
p	Pu-240	1.19E+10	4.30E+05	3.21E+11	6.53E+10	8.15E+11	3.73E+05	3.00E+10	8.28E+10
p	Pu-242	4.18E+07	1.59E+03	1.13E+09	2.29E+08	2.86E+09	1.36E+03	1.05E+08	2.90E+08
p	Pu-241	2.78E+10	2.15E+06	3.20E+11	1.44E+11	1.79E+12	9.21E+05	6.06E+10	1.35E+11
p	Pu-238	6.74E+10	2.85E+06	2.07E+12	3.76E+11	4.70E+12	2.50E+06	1.78E+11	5.05E+11
p	U-234	6.19E+03	6.26E+03	6.96E+08	1.69E+05	2.64E+06	6.19E+03	2.48E+05	8.37E+07
p	Y-90	4.69E+04	4.69E+04	8.44E+08	1.38E+06	1.37E+06	4.69E+04	3.51E+08	2.07E+08
p	Pu-239	8.12E+09	2.70E+05	2.19E+11	4.45E+10	5.56E+11	2.54E+05	2.04E+10	5.64E+10
p	Eu-154	5.02E+07	6.65E+07	3.40E+08	4.55E+08	2.24E+09	3.06E+07	4.85E+08	3.32E+08
p	Eu-155	3.14E+05	5.42E+05	1.05E+07	1.26E+07	1.34E+08	2.12E+05	9.79E+06	9.90E+06
p	Cm-242	1.88E+07	3.12E+04	5.12E+08	1.29E+08	1.61E+09	3.11E+04	8.09E+07	1.54E+08
p	Am-243	1.51E+09	7.05E+05	8.26E+08	8.03E+09	1.01E+11	3.85E+05	3.59E+09	5.54E+09
p	Cd-113m	2.21E+05	2.21E+05	1.92E+07	2.21E+05	2.21E+05	2.21E+05	8.72E+06	5.04E+06
p	Cm-243	7.34E+08	2.23E+05	6.88E+08	4.18E+09	5.21E+10	1.36E+05	2.04E+09	2.94E+09
p	Am-242m	1.29E+09	5.54E+04	1.69E+08	6.78E+09	8.51E+10	2.26E+04	3.00E+09	4.61E+09
p	Cm-244	5.19E+10	3.39E+06	6.30E+10	3.06E+11	3.82E+12	3.29E+06	1.56E+11	2.19E+11
p	Co-60	5.60E+06	2.17E+07	4.06E+08	2.02E+07	1.59E+07	1.91E+07	4.24E+07	6.96E+07
p	Am-241	1.84E+11	1.51E+07	1.04E+11	9.84E+11	1.23E+13	9.05E+06	4.42E+11	6.78E+11
sr	Sr-90	2.39E+08	2.39E+08	3.38E+08	3.05E+10	6.59E+10	2.39E+08	3.05E+08	5.87E+09

Table IX-1. SOURCE TERM GROUPING INFORMATION (Continued)

TOTAL POTENTIAL INHALATION AND EXTERNAL SOURCE TERMS FOR EACH WASTE FORM
Inhalation dose includes all nuclides which fall within the 99.9% cumulative dose for at least one organ. Tritium and I-129 have also been included, regardless of rank, per guidance in NUREG-1536.

50% BWR INHALATION SOURCE TERM

		rem/FA							
Group	Isotope	Gonad	Breast	Lung	R Marrow	B Surface	Thyroid	Remainder	Whole Body
CS	Cs-137	9.67E+08	8.65E+08	9.73E+08	9.16E+08	8.76E+08	8.75E+08	1.01E+09	9.52E+08
CS	Cs-134	4.34E+06	3.61E+06	3.94E+06	3.94E+06	3.67E+06	3.71E+06	4.64E+06	4.19E+06
H	H-3	7.67E+03	7.67E+03	7.67E+03	7.67E+03	7.67E+03	7.67E+03	7.67E+03	7.67E+03
I	I-129	4.77E+00	1.15E+01	1.72E+01	7.68E+00	7.57E+00	8.56E+04	6.48E+00	2.58E+03
P	Pu-240	1.00E+10	3.61E+05	2.69E+11	5.47E+10	6.84E+11	3.13E+05	2.52E+10	6.94E+10
P	Pu-242	3.98E+07	1.52E+03	1.07E+09	2.18E+08	2.72E+09	1.29E+03	9.98E+07	2.76E+08
P	Pu-241	2.55E+10	1.98E+06	2.94E+11	1.32E+11	1.65E+12	8.46E+05	5.57E+10	1.24E+11
P	Pu-238	5.26E+10	2.22E+06	1.62E+12	2.93E+11	3.66E+12	1.95E+06	1.38E+11	3.94E+11
P	U-234	5.24E+03	5.30E+03	5.89E+08	1.43E+05	2.23E+06	5.24E+03	2.10E+05	7.09E+07
P	Y-90	3.80E+04	3.80E+04	6.85E+08	1.12E+06	1.11E+06	3.80E+04	2.85E+08	1.68E+08
P	Pu-239	6.60E+09	2.20E+05	1.78E+11	3.62E+10	4.52E+11	2.06E+05	1.66E+10	4.59E+10
P	Eu-154	4.01E+07	5.31E+07	2.71E+08	3.63E+08	1.79E+09	2.44E+07	3.87E+08	2.65E+08
P	Eu-155	2.52E+05	4.35E+05	8.43E+06	1.01E+07	1.08E+08	1.70E+05	7.86E+06	7.95E+06
P	Cm-242	1.95E+07	3.23E+04	5.31E+08	1.34E+08	1.67E+09	3.22E+04	8.39E+07	1.60E+08
P	Am-243	1.40E+09	6.53E+05	7.64E+08	7.43E+09	9.32E+10	3.56E+05	3.32E+09	5.13E+09
P	Cd-113m	1.84E+05	1.84E+05	1.60E+07	1.84E+05	1.84E+05	1.84E+05	7.26E+06	4.20E+06
P	Cm-243	6.69E+08	2.03E+05	6.27E+08	3.81E+09	4.75E+10	1.24E+05	1.86E+09	2.68E+09
P	Am-242m	1.34E+09	5.74E+04	1.75E+08	7.03E+09	8.82E+10	2.35E+04	3.11E+09	4.78E+09
P	Cm-244	4.60E+10	3.01E+06	5.58E+10	2.71E+11	3.38E+12	2.92E+06	1.38E+11	1.94E+11
P	Co-60	4.02E+06	1.56E+07	2.92E+08	1.45E+07	1.14E+07	1.37E+07	3.04E+07	5.00E+07
P	Am-241	1.70E+11	1.39E+07	9.61E+10	9.09E+11	1.13E+13	8.36E+06	4.08E+11	6.26E+11
SR	Sr-90	1.94E+08	1.94E+08	2.74E+08	2.47E+10	5.34E+10	1.94E+08	2.47E+08	4.76E+09

Table IX-1. SOURCE TERM GROUPING INFORMATION (Continued)

TOTAL POTENTIAL INHALATION AND EXTERNAL SOURCE TERMS FOR EACH WASTE FORM
Inhalation dose includes all nuclides which fall within the 99.9% cumulative dose for at least one organ. Tritium and I-129 have also been included, regardless of rank, per guidance in NUREG-1536.

10-YEAR OLD BWR DBF INHALATION SOURCE TERM

		rem/FA							
Group	Isotope	Gonad	Breast	Lung	R Marrow	B Surface	Thyroid	Remainder	Whole Body
cs	Cs-137	7.48E+08	6.69E+08	7.53E+08	7.08E+08	6.78E+08	6.77E+08	7.78E+08	7.37E+08
cs	Ru-106	5.25E+05	7.19E+05	4.20E+08	7.11E+05	6.51E+05	6.95E+05	4.85E+06	5.22E+07
cs	Cs-134	9.66E+07	8.03E+07	8.77E+07	8.77E+07	8.18E+07	8.25E+07	1.03E+08	9.32E+07
h	H-3	7.44E+03	7.44E+03	7.44E+03	7.44E+03	7.44E+03	7.44E+03	7.44E+03	7.44E+03
I	I-129	2.99E+00	7.19E+00	1.08E+01	4.82E+00	4.75E+00	5.37E+04	4.06E+00	1.62E+03
p	Pu-238	6.31E+10	2.67E+06	1.94E+12	3.52E+11	4.40E+12	2.34E+06	1.66E+11	4.73E+11
p	Pu-241	2.19E+10	1.70E+06	2.53E+11	1.14E+11	1.41E+12	7.27E+05	4.78E+10	1.06E+11
p	Pu-239	3.49E+09	1.16E+05	9.39E+10	1.91E+10	2.39E+11	1.09E+05	8.78E+09	2.42E+10
p	Pu-240	6.25E+09	2.26E+05	1.68E+11	3.42E+10	4.28E+11	1.96E+05	1.57E+10	4.34E+10
p	Pu-242	2.59E+07	9.89E+02	6.98E+08	1.42E+08	1.78E+09	8.44E+02	6.50E+07	1.80E+08
p	Sb-125	4.48E+05	5.17E+05	2.70E+07	6.65E+05	1.22E+06	4.03E+05	1.80E+06	4.10E+06
p	Am-241	6.00E+10	4.93E+06	3.40E+10	3.21E+11	4.01E+12	2.95E+06	1.44E+11	2.21E+11
p	Eu-154	7.16E+07	9.48E+07	4.85E+08	6.49E+08	3.20E+09	4.37E+07	6.91E+08	4.73E+08
p	Eu-155	8.54E+05	1.47E+06	2.85E+07	3.43E+07	3.65E+08	5.76E+05	2.66E+07	2.69E+07
p	Cm-242	1.55E+07	2.56E+04	4.20E+08	1.06E+08	1.32E+09	2.55E+04	6.65E+07	1.27E+08
p	Am-243	1.32E+09	6.14E+05	7.19E+08	6.99E+09	8.77E+10	3.35E+05	3.13E+09	4.82E+09
p	Cd-113m	2.21E+05	2.21E+05	1.92E+07	2.21E+05	2.21E+05	2.21E+05	8.73E+06	5.05E+06
p	Cm-243	9.07E+08	2.76E+05	8.50E+08	5.17E+09	6.44E+10	1.68E+05	2.52E+09	3.64E+09
p	Am-242m	1.06E+09	4.54E+04	1.38E+08	5.57E+09	6.98E+10	1.86E+04	2.46E+09	3.78E+09
p	Cm-244	1.07E+11	6.98E+06	1.29E+11	6.29E+11	7.85E+12	6.77E+06	3.21E+11	4.49E+11
p	Cm-245	4.31E+07	8.55E+03	2.30E+07	2.29E+08	2.86E+09	4.70E+03	1.02E+08	1.57E+08
p	Co-60	7.81E+06	3.02E+07	5.66E+08	2.82E+07	2.21E+07	2.66E+07	5.91E+07	9.70E+07
p	Y-90	2.84E+04	2.84E+04	5.12E+08	8.35E+05	8.30E+05	2.84E+04	2.13E+08	1.25E+08
sr	Sr-90	1.45E+08	1.45E+08	2.05E+08	1.85E+10	3.99E+10	1.45E+08	1.85E+08	3.55E+09

Table IX-1. SOURCE TERM GROUPING INFORMATION (Continued)

PWR AND BWR SNF CRUD INHALATION SOURCE TERM

Fuel Type	Isotope	Gonad	Breast	Lung	R Marrow	B Surface	Thyroid	Remainder	Whole Body
		rem/FA							
PWR	Co-60	8.72E+05	3.37E+06	6.32E+07	3.15E+06	2.47E+06	2.97E+06	6.59E+06	1.08E+07
BWR	Co-60	3.52E+05	1.36E+06	2.55E+07	1.27E+06	9.99E+05	1.20E+06	2.66E+06	4.37E+06

AS-POURED HANFORD DHLW GLASS INHALATION SOURCE TERM

Group	Isotope	Gonad	Breast	Lung	R Marrow	B Surface	Thyroid	Remainder	Whole Body
		rem/Canister							
cs	Cs-137	1.65E+09	1.48E+09	1.66E+09	1.57E+09	1.50E+09	1.50E+09	1.72E+09	1.63E+09
cs	Ru-106	2.40E+07	3.29E+07	1.92E+10	3.25E+07	2.97E+07	3.18E+07	2.22E+08	2.39E+09
cs	Cs-134	5.77E+07	4.80E+07	5.24E+07	5.24E+07	4.88E+07	4.93E+07	6.17E+07	5.57E+07
i	I-129	5.24E-03	1.26E-02	1.89E-02	8.44E-03	8.32E-03	9.41E+01	7.12E-03	2.83E+00
p	Pu-239	6.26E+07	2.08E+03	1.69E+09	3.43E+08	4.28E+09	1.96E+03	1.58E+08	4.35E+08
p	Pu-240	2.41E+07	8.68E+02	6.48E+08	1.32E+08	1.65E+09	7.54E+02	6.06E+07	1.67E+08
p	Pu-241	2.63E+07	2.04E+03	3.04E+08	1.37E+08	1.70E+09	8.73E+02	5.75E+07	1.28E+08
p	Pm-147	1.21E+03	5.29E+03	1.14E+10	2.37E+08	2.95E+09	2.91E+03	2.29E+08	1.55E+09
p	Sb-125	2.34E+06	2.71E+06	1.41E+08	3.48E+06	6.37E+06	2.11E+06	9.44E+06	2.15E+07
p	Pu-238	2.96E+07	1.25E+03	9.09E+08	1.65E+08	2.06E+09	1.10E+03	7.79E+07	2.21E+08
p	Am-241	6.94E+10	5.70E+06	3.93E+10	3.72E+11	4.63E+12	3.42E+06	1.67E+11	2.56E+11
p	Np-237	2.18E+07	1.24E+04	1.19E+07	1.93E+08	2.41E+09	9.87E+03	1.72E+07	1.07E+08
p	Cd-113m	2.55E+05	2.55E+05	2.21E+07	2.55E+05	2.55E+05	2.55E+05	1.00E+07	5.81E+06
p	Eu-155	5.42E+05	9.34E+05	1.81E+07	2.18E+07	2.31E+08	3.65E+05	1.69E+07	1.71E+07
p	Eu-154	1.45E+07	1.93E+07	9.85E+07	1.32E+08	6.50E+08	8.88E+06	1.40E+08	9.61E+07
p	Cm-244	7.35E+08	4.81E+04	8.93E+08	4.34E+09	5.41E+10	4.67E+04	2.21E+09	3.10E+09
p	Cm-242	1.05E+06	1.74E+03	2.86E+07	7.20E+06	8.99E+07	1.74E+03	4.52E+06	8.62E+06
p	Ce-144	2.64E+07	3.84E+07	8.72E+10	3.18E+08	5.20E+08	3.22E+07	2.11E+09	1.12E+10
p	Y-90	8.00E+04	8.00E+04	1.44E+09	2.35E+06	2.34E+06	8.00E+04	5.99E+08	3.53E+08
sr	Sr-90	4.08E+08	4.08E+08	5.77E+08	5.20E+10	1.12E+11	4.08E+08	5.20E+08	1.00E+10

Table IX-1. SOURCE TERM GROUPING INFORMATION (Continued)

TOTAL POTENTIAL INHALATION AND EXTERNAL SOURCE TERMS FOR EACH WASTE FORM
Inhalation dose includes all nuclides which fall within the 99.9% cumulative dose for at least one organ. Tritium and I-129 have also been included, regardless of rank, per guidance in NUREG-1536.

AS-POURED SAVANNAH RIVER DHLW GLASS INHALATION SOURCE TERM

		rem/Canister							
Group	Isotope	Gonad	Breast	Lung	R Marrow	B Surface	Thyroid	Remainder	Whole Body
cs	Ru-106	1.08E+07	1.48E+07	8.67E+09	1.47E+07	1.34E+07	1.43E+07	1.00E+08	1.08E+09
cs	Cs-134	1.62E+07	1.35E+07	1.47E+07	1.47E+07	1.37E+07	1.39E+07	1.73E+07	1.56E+07
cs	Cs-137	1.41E+09	1.26E+09	1.42E+09	1.33E+09	1.28E+09	1.27E+09	1.47E+09	1.39E+09
p	Am-241	1.33E+09	1.09E+05	7.50E+08	7.09E+09	8.85E+10	6.52E+04	3.19E+09	4.88E+09
p	Pu-239	5.73E+08	1.91E+04	1.54E+10	3.14E+09	3.92E+10	1.79E+04	1.44E+09	3.98E+09
p	Sb-125	1.13E+06	1.31E+06	6.82E+07	1.68E+06	3.07E+06	1.02E+06	4.56E+06	1.04E+07
p	Pu-241	1.71E+09	1.32E+05	1.96E+10	8.84E+09	1.10E+11	5.65E+04	3.72E+09	8.26E+09
p	Pu-240	3.86E+08	1.39E+04	1.04E+10	2.11E+09	2.64E+10	1.21E+04	9.70E+08	2.68E+09
p	Pm-147	7.39E+02	3.22E+03	6.93E+09	1.44E+08	1.80E+09	1.77E+03	1.40E+08	9.45E+08
p	Pu-238	5.71E+10	2.42E+06	1.76E+12	3.18E+11	3.98E+12	2.12E+06	1.50E+11	4.28E+11
p	Ce-144	8.73E+06	1.27E+07	2.89E+10	1.05E+08	1.72E+08	1.07E+07	6.98E+08	3.70E+09
p	Eu-155	6.26E+05	1.08E+06	2.09E+07	2.51E+07	2.67E+08	4.22E+05	1.95E+07	1.97E+07
p	Eu-154	2.68E+07	3.55E+07	1.82E+08	2.43E+08	1.20E+09	1.64E+07	2.59E+08	1.77E+08
p	Co-60	2.99E+06	1.16E+07	2.17E+08	1.08E+07	8.49E+06	1.02E+07	2.26E+07	3.72E+07
p	Cm-244	6.33E+09	4.14E+05	7.68E+09	3.73E+10	4.66E+11	4.02E+05	1.90E+10	2.67E+10
p	Y-90	9.16E+04	9.16E+04	1.65E+09	2.69E+06	2.67E+06	9.16E+04	6.85E+08	4.04E+08
sr	Sr-90	4.57E+08	4.57E+08	6.45E+08	5.81E+10	1.26E+11	4.57E+08	5.81E+08	1.12E+10

Table IX-2. EXTERNAL (SUBMERSION) DOSE SOURCE TERMS (rem/hr per FA/m^3)

Isotope	Gonad	Breast	Lung	R Marrow	B Surface	Thyroid	Remainder	Skin	Eye Lens (1)	Whole Body
PWR DBF (48.086 GWD/MTU, 4.2% INIT. ENRICH., 10 YR. OLD)										
H-3	0.00E+00	0.00E+00	1.00E+01	0.00E+00	0.00E+00	0.00E+00	0.00E+00	0.00E+00	0.00E+00	1.21E+00
Ar-39	8.32E-06	6.98E-06	6.20E-06	1.24E-05	1.35E-05	8.13E-06	5.24E-06	5.13E-03	0.00E+00	7.58E-06
Kr-85	5.91E+03	5.16E+03	4.92E+03	6.56E+03	7.02E+03	2.85E+03	4.79E+03	5.32E+05	0.00E+00	5.36E+03
TOTAL	5.91E+03	5.16E+03	4.93E+03	6.56E+03	7.02E+03	2.85E+03	4.79E+03	5.32E+05	0.00E+00	5.37E+03
BWR DBF (49.0 GWD/MTU, 3.74% INIT. ENRICH., 10 YR. OLD)										
H-3	0.00E+00	0.00E+00	4.26E+00	0.00E+00	0.00E+00	0.00E+00	0.00E+00	0.00E+00	0.00E+00	5.12E-01
Ar-39	4.10E-06	3.44E-06	3.06E-06	6.14E-06	6.64E-06	4.01E-06	2.58E-06	2.53E-03	0.00E+00	3.74E-06
Kr-85	2.28E+03	1.99E+03	1.90E+03	2.53E+03	2.71E+03	1.10E+03	1.85E+03	2.05E+05	0.00E+00	2.07E+03
TOTAL	2.28E+03	1.99E+03	1.90E+03	2.53E+03	2.71E+03	1.10E+03	1.85E+03	2.05E+05	0.00E+00	2.07E+03
DHLW GLASS (ALL TYPES)										
N/A										
1997 BOUNDING PWR (58.0 GWD/MTU, 3.92 INIT. ENRICH., 10 YR. OLD)										
H-3	0.00E+00	0.00E+00	1.19E+01	0.00E+00	0.00E+00	0.00E+00	0.00E+00	0.00E+00	0.00E+00	1.43E+00
Ar-39	1.11E-05	9.27E-06	8.24E-06	1.65E-05	1.79E-05	1.08E-05	6.96E-06	6.82E-03	0.00E+00	1.01E-05
Kr-85	6.51E+03	5.68E+03	5.42E+03	7.23E+03	7.73E+03	3.14E+03	5.28E+03	5.86E+05	0.00E+00	5.91E+03
TOTAL	6.51E+03	5.68E+03	5.43E+03	7.23E+03	7.73E+03	3.14E+03	5.28E+03	5.86E+05	0.00E+00	5.91E+03
100% BOUNDING PWR (74.6 GWD/MTU, 5.07% INIT. ENRICH., 10 YR. OLD)										
H-3	0.00E+00	0.00E+00	9.56E+00	0.00E+00	0.00E+00	0.00E+00	0.00E+00	0.00E+00	0.00E+00	1.15E+00
Kr-85	7.42E+03	6.47E+03	6.17E+03	8.23E+03	8.81E+03	3.58E+03	6.01E+03	6.67E+05	0.00E+00	6.73E+03
TOTAL	7.42E+03	6.47E+03	6.18E+03	8.23E+03	8.81E+03	3.58E+03	6.01E+03	6.67E+05	0.00E+00	6.73E+03
50% PWR (39.56 GWD/MTU, 3.69 INIT. ENRICH., 25.9 YRS OLD(2))										
H-3	0.00E+00	0.00E+00	4.99E+00	0.00E+00	0.00E+00	0.00E+00	0.00E+00	0.00E+00	0.00E+00	5.99E-01
Ar-39	6.90E-06	5.79E-06	5.14E-06	1.03E-05	1.12E-05	6.74E-06	4.34E-06	4.25E-03	0.00E+00	6.28E-06
Kr-85	2.61E+03	2.28E+03	2.17E+03	2.90E+03	3.10E+03	1.26E+03	2.12E+03	2.35E+05	0.00E+00	2.37E+03
TOTAL	2.61E+03	2.28E+03	2.18E+03	2.90E+03	3.10E+03	1.26E+03	2.12E+03	2.35E+05		2.37E+03
50% BWR (32.24 GWD/MTU, 3.00 INIT. ENRICH., 27.2 YRS OLD(2))										
H-3	0.00E+00	0.00E+00	4.39E+00	0.00E+00	0.00E+00	0.00E+00	0.00E+00	0.00E+00	0.00E+00	5.27E-01
Ar-39	6.43E-06	5.39E-06	4.79E-06	9.62E-06	1.04E-05	6.28E-06	4.05E-06	3.96E-03	0.00E+00	5.86E-06
Kr-85	2.11E+03	1.84E+03	1.75E+03	2.34E+03	2.50E+03	1.02E+03	1.71E+03	1.90E+05	0.00E+00	1.91E+03
TOTAL	2.11E+03	1.84E+03	1.75E+03	2.34E+03	2.50E+03	1.02E+03	1.71E+03	1.90E+05	0.00E+00	1.91E+03

(1) The source term for the lens of the eye is given as zero (0) since the principal contributor, Kr-83m with a half-life of 1.83h, has decayed to negligible activity after 10 years.
(2) Conservatively used 30 year decay since the CDB would not allow the standard decay times to be scaled for output in "Curies by Isotope"

Table IX-3. Grouped Sources (Aggregated Source Terms for 50%PWR Fuel)

50% PWR Fuel (Age=25.9 Years*, 39.56 GWD/MTU, 3.69%)

Isotopic Group	Grouping per Tab. IX-2	Gonad (rem/FA)	Breast (rem/FA)	Lung (rem/FA)	R. Marrow (rem/FA)	B. Surface (rem/FA)	Thyroid (rem/FA)	Reminder (rem/FA)	Whole Body (rem/FA)
(Column No.)		(A1)	(A2)	(A3)	(A4)	(A5)	(A6)	(A7)	(A8)
Particulate	p	3.55E+11	1.14E+08	3.10E+12	1.94E+12	2.42E+13	6.72E+07	8.97E+11	1.69E+12
Noble Gas	N/A	N/A	N/A	N/A	N/A	N/A	N/A	N/A	N/A
Iodine	i	5.63E+00	1.35E+01	2.03E+01	9.07E+00	8.94E+00	1.01E+05	7.64E+00	3.04E+03
Cesium	cs	1.17E+09	1.04E+09	1.18E+09	1.11E+09	1.05E+09	1.05E+09	1.22E+09	1.15E+09
Tritium	h.	8.71E+03	8.71E+03	8.71E+03	8.71E+03	8.71E+03	8.71E+03	8.71E+03	8.71E+03
Crud	PWR	8.72E+05	3.37E+06	6.32E+07	3.15E+06	2.47E+06	2.97E+06	6.59E+06	1.08E+07
Strontium	sr	2.39E+08	2.39E+08	3.38E+08	3.05E+10	6.59E+10	2.39E+08	3.05E+08	5.87E+09

Table IX-4. BEST ESTIMATE INHALATION DOSE TO THE GONAD

50% PWR Bounding Fuel

Isotopic Group	Gonad (rem/FA)	# of FA's	Release Fraction	Mitigation Factor	Breathing Rate m^3/sec	100 m X/Q sec/m^3	Offsite Dose rem 100 m	1000 m X/Q sec/m^3	Offsite Dose rem 1000 m	5000 m X/Q sec/m^3	Offsite Dose rem 5000 m
(Column No.)	(1): See Column (A1), Table IX-3	(2)	(3)	(4)	(5)	(6)	(7)=(1)*(2)*(3)*(4)*(5)*(6)	(8)	(9)=(1)*(2)*(3)*(4)*(5)*(8)	(10)	(11)=(1)*(2)*(3)*(4)*(5)*(10)
Particulate	3.55E+11	8	2.17E-06	3.00E-04	3.30E-04	5.48E-04	3.35E-04	6.15E-06	3.76E-06	1.44E-05	8.79E-06
Noble Gas	N/A	8	3.00E-02	1.00E+00	3.30E-04	5.48E-04		6.15E-06		1.44E-05	
Iodine	5.63E+00	8	1.00E-02	1.00E+00	3.30E-04	5.48E-04	8.14E-08	6.15E-06	9.14E-10	1.44E-05	2.14E-09
Cesium	1.17E+09	8	4.27E-06	3.00E-04	3.30E-04	5.48E-04	2.16E-06	6.15E-06	2.43E-08	1.44E-05	5.68E-08
Tritium	8.71E+03	8	3.00E-02	1.00E+00	3.30E-04	5.48E-04	3.78E-04	6.15E-06	4.25E-06	1.44E-05	9.93E-06
Crud	8.72E+05	8	1.50E-01	3.00E-04	3.30E-04	5.48E-04	5.68E-05	6.15E-06	6.37E-07	1.44E-05	1.49E-06
Strontium	2.39E+08	8	4.27E-06	3.00E-04	3.30E-04	5.48E-04	4.43E-07	6.15E-06	4.98E-09	1.44E-05	1.16E-08
					Total		**7.72E-04**		**8.67E-06**		**2.03E-05**

Table IX-4. BEST ESTIMATE INHALATION DOSE TO THE BREAST

50% PWR Bounding Fuel

Isotopic Group	Breast (rem/FA)	# of FA's	Release Fraction	Mitigation Factor	Breathing Rate m^3/sec	100 m X/Q sec/m^3	Offsite Dose rem 100 m	1000 m X/Q sec/m^3	Offsite Dose rem 1000 m	5000 m X/Q sec/m^3	Offsite Dose rem 5000 m
(Column No.)	(1): See Column (A1), Table IX-3	(2)	(3)	(4)	(5)	(6)	(7)=(1)*(2)*(3)*(4)*(5)*(6)	(8)	(9)=(1)*(2)*(3)*(4)*(5)*(8)	(10)	(11)=(1)*(2)*(3)*(4)*(5)*(10)
Particulate	1.14E+08	8	2.17E-06	3.00E-04	3.30E-04	5.48E-04	1.08E-07	6.15E-06	1.21E-09	1.44E-05	2.83E-09
Noble Gas	N/A	8	3.00E-02	1.00E+00	3.30E-04	5.48E-04	0.00E+00	6.15E-06	0.00E+00	1.44E-05	0.00E+00
Iodine	1.35E+01	8	1.00E-02	1.00E+00	3.30E-04	5.48E-04	1.96E-07	6.15E-06	2.20E-09	1.44E-05	5.15E-09
Cesium	1.04E+09	8	4.27E-06	3.00E-04	3.30E-04	5.48E-04	1.94E-06	6.15E-06	2.18E-08	1.44E-05	5.09E-08
Tritium	8.71E+03	8	3.00E-02	1.00E+00	3.30E-04	5.48E-04	3.78E-04	6.15E-06	4.25E-06	1.44E-05	9.93E-06
Crud	3.37E+06	8	1.50E-01	3.00E-04	3.30E-04	5.48E-04	2.20E-04	6.15E-06	2.46E-06	1.44E-05	5.77E-06
Strontium	2.39E+08	8	4.27E-06	3.00E-04	3.30E-04	5.48E-04	4.43E-07	6.15E-06	4.98E-09	1.44E-05	1.16E-08
					Total		**6.00E-04**		**6.74E-06**		**1.58E-05**

Table IX-4. BEST ESTIMATE INHALATION DOSE TO THE LUNG

50% PWR Bounding Fuel

Isotopic Group	Lung (rem/FA)	# of FA's	Release Fraction	Mitigation Factor	Breathing Rate m^3/sec	100 m X/Q sec/m^3	Offsite Dose rem 100 m	1000 m X/Q sec/m^3	Offsite Dose rem 1000 m	5000 m X/Q sec/m^3	Offsite Dose rem 5000 m
(Column No.)	(1): See Column (A1), Table IX-3	(2)	(3)	(4)	(5)	(6)	(7)=(1)*(2)*(3)*(4)*(5)*(6)	(8)	(9)=(1)*(2)*(3)*(4)*(5)*(8)	(10)	(11)=(1)*(2)*(3)*(4)*(5)*(10)
Particulate	3.10E+12	8	2.17E-06	3.00E-04	3.30E-04	5.48E-04	2.93E-03	6.15E-06	3.29E-05	1.44E-05	7.69E-05
Noble Gas	N/A	8	3.00E-02	1.00E+00	3.30E-04	5.48E-04	0.00E+00	6.15E-06	0.00E+00	1.44E-05	0.00E+00
Iodine	2.03E+01	8	1.00E-02	1.00E+00	3.30E-04	5.48E-04	2.94E-07	6.15E-06	3.30E-09	1.44E-05	7.73E-09
Cesium	1.18E+09	8	4.27E-06	3.00E-04	3.30E-04	5.48E-04	2.18E-06	6.15E-06	2.45E-08	1.44E-05	5.73E-08
Tritium	8.71E+03	8	3.00E-02	1.00E+00	3.30E-04	5.48E-04	3.78E-04	6.15E-06	4.25E-06	1.44E-05	9.93E-06
Crud	6.32E+07	8	1.50E-01	3.00E-04	3.30E-04	5.48E-04	4.12E-03	6.15E-06	4.62E-05	1.44E-05	1.08E-04
Strontium	3.38E+08	8	4.27E-06	3.00E-04	3.30E-04	5.48E-04	6.27E-07	6.15E-06	7.04E-09	1.44E-05	1.65E-08
					Total		**7.43E-03**		**8.33E-05**		**1.95E-04**

Table IX-4. BEST ESTIMATE INHALATION DOSE TO THE MARROW

50% PWR Bounding Fuel

Isotopic Group	Marrow (rem/FA)	# of FA's	Release Fraction	Mitigation Factor	Breathing Rate m^3/sec	100 m X/Q sec/m^3	Offsite Dose rem 100 m	1000 m X/Q sec/m^3	Offsite Dose rem 1000 m	5000 m X/Q sec/m^3	Offsite Dose rem 5000 m
(Column No.)	(1): See Column (A1), Table IX-3	(2)	(3)	(4)	(5)	(6)	(7)=(1)*(2)*(3)*(4)*(5)*(6)	(8)	(9)=(1)*(2)*(3)*(4)*(5)*(8)	(10)	(11)=(1)*(2)*(3)*(4)*(5)*(10)
Particulate	1.94E+12	8	2.17E-06	3.00E-04	3.30E-04	5.48E-04	1.83E-03	6.15E-06	2.05E-05	1.44E-05	4.81E-05
Noble Gas	N/A	8	3.00E-02	1.00E+00	3.30E-04	5.48E-04	0.00E+00	6.15E-06	0.00E+00	1.44E-05	0.00E+00
Iodine	9.07E+00	8	1.00E-02	1.00E+00	3.30E-04	5.48E-04	1.31E-07	6.15E-06	1.47E-09	1.44E-05	3.45E-09
Cesium	1.11E+09	8	4.27E-06	3.00E-04	3.30E-04	5.48E-04	2.05E-06	6.15E-06	2.30E-08	1.44E-05	5.39E-08
Tritium	8.71E+03	8	3.00E-02	1.00E+00	3.30E-04	5.48E-04	3.78E-04	6.15E-06	4.25E-06	1.44E-05	9.93E-06
Crud	3.15E+06	8	1.50E-01	3.00E-04	3.30E-04	5.48E-04	2.05E-04	6.15E-06	2.30E-06	1.44E-05	5.39E-06
Strontium	3.05E+10	8	4.27E-06	3.00E-04	3.30E-04	5.48E-04	5.66E-05	6.15E-06	6.35E-07	1.44E-05	1.49E-06
					Total		**2.47E-03**		**2.77E-05**		**6.49E-05**

Table IX-4. BEST ESTIMATE INHALATION DOSE TO THE BONE SURFACE

50% PWR Bounding Fuel

Isotopic Group	B. Surface (rem/FA)	# of FA's	Release Fraction	Mitigation Factor	Breathing Rate m^3/sec	100 m X/Q sec/m^3	Offsite Dose rem 100 m	1000 m X/Q sec/m^3	Offsite Dose rem 1000 m	5000 m X/Q sec/m^3	Offsite Dose rem 5000 m
(Column No.)	(1): See Column (A1), Table IX-3	(2)	(3)	(4)	(5)	(6)	(7)=(1)*(2)*(3)*(4)*(5)*(6)	(8)	(9)=(1)*(2)*(3)*(4)*(5)*(8)	(10)	(11)=(1)*(2)*(3)*(4)*(5)*(10)
Particulate	2.42E+13	8	2.17E-06	3.00E-04	3.30E-04	5.48E-04	2.29E-02	6.15E-06	2.57E-04	1.44E-05	6.00E-04
Noble Gas	N/A	8	3.00E-02	1.00E+00	3.30E-04	5.48E-04	0.00E+00	6.15E-06	0.00E+00	1.44E-05	0.00E+00
Iodine	8.94E+00	8	1.00E-02	1.00E+00	3.30E-04	5.48E-04	1.29E-07	6.15E-06	1.45E-09	1.44E-05	3.40E-09
Cesium	1.05E+09	8	4.27E-06	3.00E-04	3.30E-04	5.48E-04	1.96E-06	6.15E-06	2.20E-08	1.44E-05	5.14E-08
Tritium	8.71E+03	8	3.00E-02	1.00E+00	3.30E-04	5.48E-04	3.78E-04	6.15E-06	4.25E-06	1.44E-05	9.93E-06
Crud	2.47E+06	8	1.50E-01	3.00E-04	3.30E-04	5.48E-04	1.61E-04	6.15E-06	1.81E-06	1.44E-05	4.23E-06
Strontium	6.59E+10	8	4.27E-06	3.00E-04	3.30E-04	5.48E-04	1.22E-04	6.15E-06	1.37E-06	1.44E-05	3.21E-06
					Total		**2.35E-02**		**2.64E-04**		**6.18E-04**

Table IX-4. BEST ESTIMATE INHALATION DOSE TO THE THYROID

50% PWR Bounding Fuel

Isotopic Group	Thyroid (rem/FA)	# of FA's	Release Fraction	Mitigation Factor	Breathing Rate m^3/sec	100 m X/Q sec/m^3	Offsite Dose rem 100 m	1000 m X/Q sec/m^3	Offsite Dose rem 1000 m	5000 m X/Q sec/m^3	Offsite Dose rem 5000 m
(Column No.)	(1); See Column (A1), Table IX-3	(2)	(3)	(4)	(5)	(6)	(7)=(1)*(2)*(3)*(4)*(5)*(6)	(8)	(9)=(1)*(2)*(3)*(4)*(5)*(8)	(10)	(11)=(1)*(2)*(3)*(4)*(5)*(10)
Particulate	6.72E+07	8	2.17E-06	3.00E-04	3.30E-04	5.48E-04	6.34E-08	6.15E-06	7.11E-10	1.44E-05	1.66E-09
Noble Gas	N/A	8	3.00E-02	1.00E+00	3.30E-04	5.48E-04	0.00E+00	6.15E-06	0.00E+00	1.44E-05	0.00E+00
Iodine	1.01E+05	8	1.00E-02	1.00E+00	3.30E-04	5.48E-04	1.46E-03	6.15E-06	1.64E-05	1.44E-05	3.84E-05
Cesium	1.05E+09	8	4.27E-06	3.00E-04	3.30E-04	5.48E-04	1.96E-06	6.15E-06	2.20E-08	1.44E-05	5.14E-08
Tritium	8.71E+03	8	3.00E-02	1.00E+00	3.30E-04	5.48E-04	3.78E-04	6.15E-06	4.25E-06	1.44E-05	9.93E-06
Crud	2.97E+06	8	1.50E-01	3.00E-04	3.30E-04	5.48E-04	1.93E-04	6.15E-06	2.17E-06	1.44E-05	5.08E-06
Strontium	2.39E+08	8	4.27E-06	3.00E-04	3.30E-04	5.48E-04	4.43E-07	6.15E-06	4.98E-09	1.44E-05	1.16E-08
					Total		**2.04E-03**		**2.29E-05**		**5.35E-05**

Table IX-4. BEST ESTIMATE INHALATION DOSE TO THE REMAINDER

50% PWR Bounding Fuel

Isotopic Group	Remainder (rem/FA)	# of FA's	Release Fraction	Mitigation Factor	Breathing Rate m^3/sec	100 m X/Q sec/m^3	Offsite Dose rem 100 m	1000 m X/Q sec/m^3	Offsite Dose rem 1000 m	5000 m X/Q sec/m^3	Offsite Dose rem 5000 m
(Column No.)	(1): See Column (A1), Table IX-3	(2)	(3)	(4)	(5)	(6)	(7)=(1)*(2)*(3)*(4)*(5)*(6)	(8)	(9)=(1)*(2)*(3)*(4)*(5)*(8)	(10)	(11)=(1)*(2)*(3)*(4)*(5)*(10)
Particulate	8.97E+11	8	2.17E-06	3.00E-04	3.30E-04	5.48E-04	8.46E-04	6.15E-06	9.50E-06	1.44E-05	2.22E-05
Noble Gas	N/A	8	3.00E-02	1.00E+00	3.30E-04	5.48E-04	0.00E+00	6.15E-06	0.00E+00	1.44E-05	0.00E+00
Iodine	7.64E+00	8	1.00E-02	1.00E+00	3.30E-04	5.48E-04	1.11E-07	6.15E-06	1.24E-09	1.44E-05	2.90E-09
Cesium	1.22E+09	8	4.27E-06	3.00E-04	3.30E-04	5.48E-04	2.26E-06	6.15E-06	2.53E-08	1.44E-05	5.93E-08
Tritium	8.71E+03	8	3.00E-02	1.00E+00	3.30E-04	5.48E-04	3.78E-04	6.15E-06	4.25E-06	1.44E-05	9.93E-06
Crud	6.59E+06	8	1.50E-01	3.00E-04	3.30E-04	5.48E-04	4.29E-04	6.15E-06	4.82E-06	1.44E-05	1.13E-05
Strontium	3.05E+08	8	4.27E-06	3.00E-04	3.30E-04	5.48E-04	5.66E-07	6.15E-06	6.35E-09	1.44E-05	1.49E-08
					Total		**1.66E-03**		**1.86E-05**		**4.35E-05**

Table IX-4. BEST ESTIMATE INHALATION DOSE TO THE WHOLE BODY

50% PWR Bounding Fuel

Isotopic Group	Whole Body (rem/FA)	# of FA's	Release Fraction	Mitigation Factor	Breathing Rate m^3/sec	100 m X/Q sec/m^3	Offsite Dose rem 100 m	1000 m X/Q sec/m^3	Offsite Dose rem 1000 m	5000 m X/Q sec/m^3	Offsite Dose rem 5000 m
(Column No.)	(1): See Column (A1), Table IX-3	(2)	(3)	(4)	(5)	(6)	(7)=(1)*(2)*(3)*(4)*(5)*(6)	(8)	(9)=(1)*(2)*(3)*(4)*(5)*(8)	(10)	(11)=(1)*(2)*(3)*(4)*(5)*(10)
Particulate	1.69E+12	8	2.17E-06	3.00E-04	3.30E-04	5.48E-04	1.59E-03	6.15E-06	1.79E-05	1.44E-05	4.19E-05
Noble Gas	N/A	8	3.00E-02	1.00E+00	3.30E-04	5.48E-04	0.00E+00	6.15E-06	0.00E+00	1.44E-05	0.00E+00
Iodine	3.04E+03	8	1.00E-02	1.00E+00	3.30E-04	5.48E-04	4.40E-05	6.15E-06	4.94E-07	1.44E-05	1.16E-06
Cesium	1.15E+09	8	4.27E-06	3.00E-04	3.30E-04	5.48E-04	2.13E-06	6.15E-06	2.39E-08	1.44E-05	5.58E-08
Tritium	8.71E+03	8	3.00E-02	1.00E+00	3.30E-04	5.48E-04	3.78E-04	6.15E-06	4.25E-06	1.44E-05	9.93E-06
Crud	1.08E+07	8	1.50E-01	3.00E-04	3.30E-04	5.48E-04	7.03E-04	6.15E-06	7.90E-06	1.44E-05	1.85E-05
Strontium	5.87E+09	8	4.27E-06	3.00E-04	3.30E-04	5.48E-04	1.09E-05	6.15E-06	1.22E-07	1.44E-05	2.86E-07
					Total		**2.73E-03**		**3.07E-05**		**7.18E-05**

Table IX-4. BEST ESTIMATE EXTERNAL DOSE (SUBMERSION)

SOURCE TERM Units: rem/hr per FA/m^3

Isotope	Gonad	Breast	Lung	R Marrow	B Surface	Thyroid	Remainder	Skin	Eye Lens	Whole Body
(Column No.)	(1)	(2)	(3)	(4)	(5)	(6)	(7)	(8)	(9)	(10)
50% PWR										
H-3	0.00E+00	0.00E+00	4.99E+00	0.00E+00	0.00E+00	0.00E+00	0.00E+00	0.00E+00	0.00E+00	5.99E-01
Kr-85	2.61E+03	2.28E+03	2.17E+03	2.90E+03	3.10E+03	1.26E+03	2.12E+03	2.35E+05	0.00E+00	2.37E+03
Total	2.61E+03	2.28E+03	2.17E+03	2.90E+03	3.10E+03	1.26E+03	2.12E+03	2.35E+05	0.00E+00	2.37E+03

The source term for the lens of the eye is given as zero (0) since the principal contributor Kr-83m has decayed to negligible activity after 10 years.

CONVERSION OF SOURCE TERM

	Source (rem/hr per FA/m^3)	Conversion Factor (sec/hr)	Source (rem/sec per FA/m^3)
(Column No.)	(1)	(2)	(3) = (1)/(2)
Gonad	2.61E+03	3.60E+03	7.25E-01
Breast	2.28E+03	3.60E+03	6.33E-01
Lung	2.17E+03	3.60E+03	6.04E-01
R Marrow	2.90E+03	3.60E+03	8.06E-01
B Surface	3.10E+03	3.60E+03	8.61E-01
Thyroid	1.26E+03	3.60E+03	3.50E-01
Remainder	2.12E+03	3.60E+03	5.89E-01
Skin	2.35E+05	3.60E+03	6.53E+01
Eye Lens	0.00E+00	3.60E+03	0.00E+00
Whole Body	2.37E+03	3.60E+03	6.58E-01

OFFSITE DOSES FOR GROUND RELEASE (No Filtration Credit for Gases)

	Source rem/sec per FA/m^3	# of FA's	Release Fraction	Mitigation Factor	100 m X/Q sec/m^3	Offsite Dose 100 m rem	1000 m X/Q sec/m^3	Offsite Dose Dose rem	5000 m X/Q sec/m^3	Offsite Dose Dose rem
(Column)	(1); from Col. (3) above	(2)	(3)	(4)	(5)	(6)=(1)*(2)*(3)*(4)*(5)	(7)	(8)=(1)*(2)*(3)*(4)*(7)	(9)	(10)=(1)*(2)*(3)*(4)*(9)
Gonad	7.25E-01	8	3.00E-02	1.00E+00	5.54E-04	9.64E-05	6.84E-06	1.19E-06	1.44E-05	2.51E-06
Breast	6.33E-01	8	3.00E-02	1.00E+00	5.54E-04	8.42E-05	6.84E-06	1.04E-06	1.44E-05	2.19E-06
Lung	6.04E-01	8	3.00E-02	1.00E+00	5.54E-04	8.03E-05	6.84E-06	9.91E-07	1.44E-05	2.09E-06
R Marrow	8.06E-01	8	3.00E-02	1.00E+00	5.54E-04	1.07E-04	6.84E-06	1.32E-06	1.44E-05	2.78E-06
B Surface	8.61E-01	8	3.00E-02	1.00E+00	5.54E-04	1.14E-04	6.84E-06	1.41E-06	1.44E-05	2.98E-06
Thyroid	3.50E-01	8	3.00E-02	1.00E+00	5.54E-04	4.65E-05	6.84E-06	5.74E-07	1.44E-05	1.21E-06
Remainder	5.89E-01	8	3.00E-02	1.00E+00	5.54E-04	7.83E-05	6.84E-06	9.66E-07	1.44E-05	2.04E-06
Skin	6.53E+01	8	3.00E-02	1.00E+00	5.54E-04	8.68E-03	6.84E-06	1.07E-04	1.44E-05	2.26E-04
Eye Lens	0.00E+00	8	3.00E-02	1.00E+00	5.54E-04	0.00E+00	6.84E-06	0.00E+00	1.44E-05	0.00E+00
Whole Body	6.58E-01	8	3.00E-02	1.00E+00	5.54E-04	8.75E-05	6.84E-06	1.08E-06	1.44E-05	2.28E-06

BEST ESTIMATE SUMMARY OF DOSE CALCULATIONS

Waste form	Inhalation Dose (Rem)			Dose Term for Regulation	Submersion/External Dose (Rem)			Dose Term for Regulation	Sum of Inhalation and Submersion (Rem)			Dose Term for Regulation
(Column)	(1)	(2)	(3)		(4)	(5)	(6)		(7)=(1) + (4)	(8)=(2) + (5)	(9)=(3) + (6)	
50% Bounding PW	100 m	1000 m	5000 m		100 m	1000 m	5000 m		100 m	1000 m	5000 m	
Gonad	7.72E-04	8.67E-06	2.03E-05		9.64E-05	1.19E-06	2.51E-06		8.69E-04	9.86E-06	2.28E-05	
Breast	6.00E-04	6.74E-06	1.58E-05		8.42E-05	1.04E-06	2.19E-06		6.85E-04	7.78E-06	1.80E-05	
Lung	7.43E-03	8.33E-05	1.95E-04		8.03E-05	9.91E-07	2.09E-06		7.51E-03	8.43E-05	1.97E-04	
R Marrow	2.47E-03	2.77E-05	6.49E-05		1.07E-04	1.32E-06	2.78E-06		2.58E-03	2.91E-05	6.77E-05	
B Surface	**2.35E-02**	**2.64E-04**	**6.18E-04**	<CDE	1.14E-04	1.41E-06	2.98E-06		2.36E-02	2.65E-04	6.21E-04	<CDE
Thyroid	2.04E-03	2.29E-05	5.35E-05		4.65E-05	5.74E-07	1.21E-06		2.08E-03	2.34E-05	5.47E-05	
Remainder	1.66E-03	1.86E-05	4.35E-05		7.83E-05	9.66E-07	2.04E-06		1.73E-03	1.96E-05	4.55E-05	
Whole Body	2.73E-03	3.07E-05	7.18E-05	<CEDE	**8.75E-05**	**1.08E-06**	**2.28E-06**	<DDE	2.82E-03	3.18E-05	7.41E-05	<TEDE=CEDE+DDE
Eye Lens	N/A	N/A	N/A	<EYE	0.00E+00	0.00E+00	0.00E+00	<EYE	0.00E+00	0.00E+00	0.00E+00	<EYE
Skin	N/A	N/A	N/A	<SKIN	8.68E-03	1.07E-04	2.26E-04	<SKIN	8.68E-03	1.07E-04	2.26E-04	<SKIN
Note: Bolded quantities are added together to calculate "CDE + DDE":									2.36E-02	2.65E-04	6.20E-04	<CDE + DDE

Figure IX-1. Hand Calculation (Page 1 of 3)

INHALATION DOSE TO BREAST FROM 50% PWR FUEL FROM CESIUM GROUP USING EQ. IX-1:

CESIUM SOURCE TERM = 1.04E+9 REM/FA
NO. OF ASSYS BREACHED = 8
PULF = (EPF)(A)(d)(g)(h)

EPF = 2E-1

$A = 0.0002 \frac{cm^3}{J}$

$d = 10\ g/cm^3$

$g = 980.7\ cm/s^2$

$h = 16.5\ ft = 503\ cm$

$$= (2E\text{-}1)\left(0.0002 \frac{cm^3}{J}\right)\left(\frac{10\ g}{cm^3}\right)\left(980.7 \frac{cm}{s^2}\right)(503\ cm)$$

$$= 197.32 \frac{cm\ cm\ g}{J\ s^2} \times \frac{1\ J}{1\times10^7\ dyne\ cm} \times \frac{0.001\ kg}{1\ g} \times \frac{0.01\ m}{1\ cm}$$

$$= 1.97E\text{-}10 \frac{N}{dyne} \times \frac{1E+5\ dyne}{1\ N}$$

$$= 1.97E\text{-}5$$

MITIGATION = 3E-4
RELEASE FRACTION = (2.3E-5 + 1.97E-5)(0.1) = 4.27E-6
BREATHING RATE = 3.3E-4 m^3/s
χ/Q @ 5000 m = 1.44E-5 s/m^3

$$Dose = (1.04E+9\ rem)(8\ FA)(4.27E\text{-}6)\left(3.3E\text{-}4 \frac{m^3}{s}\right)(3.0E\text{-}4)\left(1.44E\text{-}5 \frac{s}{m^3}\right)$$

$\boxed{D = 5.06E\text{-}8\ rem}$ FA

Figure IX-1. Hand Calculation (Page 2 of 3)

SUBMERSION DOSE FOR WHOLE BODY FROM 50% PWR FUEL USING EQ. IX-2:

SOURCE TERM = $6.58E-1 \frac{rem}{s} \frac{FA}{m^3}$

FUEL ASSYS DROPPED = 8

RELEASE FRACTION = (.3)(.1) = 0.03

MITIGATION = 1

$\chi/Q = 1.44E-5\ s/m^3$

$$Dose = \left(6.58E-1 \frac{rem\ m^3}{FA\ s}\right)(8\ FA)(.03)(1)\left(1.44E-5 \frac{s}{m^3}\right)$$

$$\boxed{Dose = 2.27E-6\ rem}$$

Figure IX-1. Hand Calculation (Page 3 of 3)

TOTAL DOSE USING EQs. IX-3 AND IX-4:

	INHALATION	SUBMERSION	TOTAL
GONAD	2.03E-5	2.51E-6	2.28E-5
BREAST	1.58E-5	2.19E-6	1.80E-5
LUNG	1.95E-4	2.09E-6	1.97E-4
MARROW	6.49E-5	2.78E-6	6.77E-5
B. SURFACE	6.18E-4	2.98E-6	6.21E-4
THYROID	5.35E-5	1.21E-6	5.47E-5
REMAINDER	4.35E-5	2.04E-6	4.55E-5
WHOLE BODY	7.18E-5	2.28E-6	7.40E-5
SKIN	0	2.26E-4	2.26E-4
EYE	0	0	

CEDE = INHALATION WHOLE BODY = 7.18E-5
DDE = SUBMERSION WHOLE BODY = 2.28E-6
CDE = MAX. INTERNAL ORGAN = 6.18E-4 (B. SURFACE)
TEDE = CEDE + DDE = 7.41E-5
CDE + DDE = = 6.20E-4

Attachment X – Crane Data from the U.S. Navy

Crane Drop Frequency

JAK 11/12/98

The crane drop frequency for heavy crane lifts at the MGR was estimated based on crane lift information from the ~~U.S. Navy~~ Newport News Shipbuilding facility (see page X-2 and X-3, faxed information from D. McKercher to L. Booth). The total number of lifts for non-magnet cranes, during 1996 and 1997, was 933,000 (page X-2). Magnet cranes were excluded because magnet cranes are not expected to be used in the MGR surface facilities. The number of dropped loads for non-magnet cranes during this same time period was 13 (page X-2). Based on the above information, the crane drop frequency for heavy lifts at the MGR is calculated to be 1.4E-5 drops per lift (13 drops /933,000 lifts).

This drop frequency was used as the initiating event for crane drop events involving transportation casks, all types of canisters, and disposal containers. The drop frequency is an integral number to calculate the overall event frequency for a sequence of events and has a material effect on the event category (i.e., Cat. 1, Cat. 2 or BDBE). It is expected that this number will be further scrutinized and refined as additional information is gathered.

Note: The drop frequency for individual spent fuel assemblies handled in the Assembly Transfer System is based on historical data on fuel handling accidents at commercial nuclear power plants (see Assumption 3.4.1 and Reference 7.23).

Two-Block Probability

In a typical two-block crane event the load is lifted up to the highest point physically possible, usually in an uncontrolled motion, resulting in a break of the load-bearing cable and a drop of the load. The crane two-block event probability is the fraction of all crane drops which are two-block events. Since the component level of design detail is insufficient to calculate a two-block event failure rate, the two-block probability was estimated based on actuarial data from the Department of the Navy (provided under cover letter from K. Schlichting to J. Kappes, page X-3 through X-4).

Based upon the Department of the Navy information (see graph of "Accident Types" on page X-4), the total number of dropped load accidents which ocurred between 10/94 and 9/96 was 45. The graph on Page X-4 notes that accidents may be counted in more than one type of category. Based on this same graph, the number of two-block events during the same time period was 11. The two-block events in this graph are conservatively assumed to be a subset of the 45 total dropped load events. Therefore, the two-block probability was calculated to be 0.24 (11 two-blocks/45 dropped loads).

JAK
11/12/98

facsimile transmittal

To:	Jim Kappes	Fax:	702-295-4230
From:	Dave McKercher	Date:	11/12/98
Re:	Crane Lift Information	Pages:	1
CC:			

☐ Urgent x For Review ☐ Please Comment ☐ Please Reply ☐ Please Recycle

Notes: As discussed, the lift and accident information that we provided Louie Booth on 5/11/98 came from our crane accident data base. It is not copy right protected and you are free to use it in the "Crane Drop Frequency" paragraph you faxed me on 11/10/98 subject to deleting the words "U.S. Navy" in front of Newport News Shipbuilding.

11/12/98

JAK
11/12/98

Newport News Shipbuilding's Crane Lift Information

05/11/98

Bridge and Gantry Crane Lifts

	Magnet Cranes	Other	Total
1997	604,000	518,000	1,122,000
1996	576,000	415,000	991,000
Total	1,180,000	933,000	2,113,000

Number of Dropped Loads

	Magnet Cranes	Other	Total
1997	3	5	8
1996	4	8	12
Total	7	13	20

Lifts/Dropped Loads

	Magnet Cranes	Other	Total
1997	201,333	103,600	140,250
1996	144,000	51,875	82,583
Total	168,571	71,769	105,650

ATTN:
Louie Booth
702-295-4209
Fax
702-295-4230

Call Dave McKercher
757-380-2502
w/ QUESTIONS

FAX ~~07605~~
(757) 380-7605

JAK 11/12/98

DEPARTMENT OF THE NAVY

NORTHERN DIVISION
NAVAL FACILITIES ENGINEERING COMMAND
10 INDUSTRIAL HIGHWAY
MAIL STOP, #82
LESTER, PA 19113-2090

5720/98-140
24 April 1998

IN REPLY REFER TO

MR JAMES KAPPES
DE&S
400 SOUTH TRYON ST
CHARLOTTE NC 26201-1004

Dear Mr. Kappes:

This is in response to your Freedom of Information Act request dated 16 April 1998. As a matter under the Freedom of Information Act, it was referred to this office for action.

In accordance with your request, the enclosed information is provided. Should you have any further inquiries, please identify control #98-140 in your correspondence.

The cost associated with processing your request have been waived.

Sincerely,

K. M. Schlichting

KATHLEEN M. SCHLICHTING
Freedom of InformaTion
Act Coordinator
By direction of the
Commanding Officer

JAK 11/12/98

Accident Types

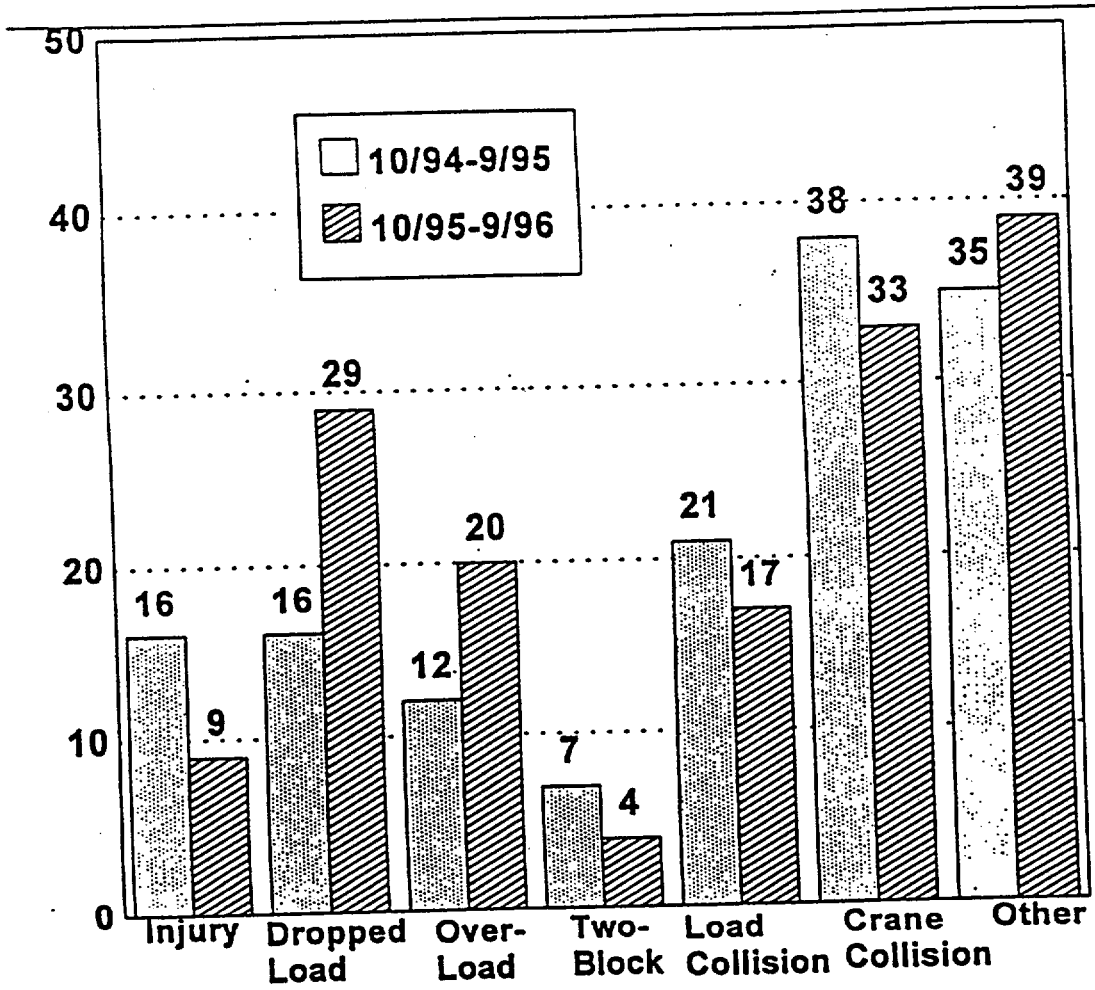

* Accidents may be counted in more than one type category.

PRELIMINARY DRAFT

MEMORANDUM

TO: Kelvin Montague

CC: Dale Ambos, Paul Fransioli, Frederic Godshall, Keith Kersch

FROM: Walt Schalk, Doug Landwehr

RE: ***PRELIMINARY DRAFT*** Requested χ/Q values

Date: 07 May 1998

Objective:

To provide the Design Basis Engineering Group with ***"preliminary"*** maximum overall site χ/Q and maximum sector χ/Q values at the 50% exceeded and the 5% exceeded levels for the "fence-line" distance of 5000 meters.

Methodology:

χ/Q values will be calculated using the methodology outlined in Section 1.3.1 of NRC Regulatory Guide 1.145 (NRC-RG-1.145). The sigma-y and sigma-z curves shown in Figures 1 and 2 of NRC-RG-1.145 were approximated using equations derived by Tadmor and Gur (Till and Meyer, 1983), and Martin and Tikvart (Till and Meyer, 1983), respectively. The building wake and plume meander correction factor, M, curve of NRC-RG-1.145 equation (3) shown in figure 3 is approximated using the equation used in the PAVAN code (NRC, 1982).

Queries of the meteorological database and calculations by Microsoft Access 97 were designed to calculate all χ/Q values, and select the appropriate value according to NRC-RG-1.145 guidance. A cumulative probability distribution was constructed for all χ/Q values over the time period using Microsoft Excel 97. Excel 97 was also used to generate a plot of χ/Q versus probability and select the χ/Q value that was exceeded 50 percent and 5 percent of the time. The χ/Q values were then grouped into 16 sectors based on wind direction. Excel 97 was used to generate cumulative probability distributions and plots of χ/Q versus probability for each sector. The χ/Q values for each sector that was exceeded 50% and 5% of the time were determined.

PRELIMINARY DRAFT

Data:

The data required to complete these calculations are hourly wind speed, wind direction, and stability class. The wind data used are from the 60-meter level of the NTS-60 tower, and the stability data are from the 10-meter level of the same tower. The NTS-60 tower is located approximately 1100 meters from the proposed Repository Operations Area (North Portal). The hourly data used are from 1993 to 1996, inclusive.

Assumptions:

Equation (1) in NRC-RG-1.145 includes building wake effects through the use of a factor representing the smallest cross-sectional area of the reactor building. Since we do not know the dimensions of the proposed facility, we have taken the conservative assumption of 0 m^2 for this factor. As a result, this maximizes the χ/Q calculated by this equation.

Results:

Preliminary Dispersion Estimates at 5 km from the source

	MAXIMUM 50% Exceeded χ/Q (sec/m^3)	MAXIMUM 5% Exceeded χ/Q (sec/m^3)
Overall Site	1.84E-06	2.97E-05
SECTORS		
N	6.18E-06	2.97E-05
NNE	4.54E-06	2.63E-05
NE	1.72E-06	3.02E-05
ENE	2.28E-07	3.48E-05
E	2.00E-07	3.34E-05
ESE	3.04E-08	2.97E-05
SE	2.85E-08	2.99E-05
SSE	3.51E-07	1.99E-05
S	1.09E-06	1.60E-05
SSW	1.84E-06	2.38E-05
SW	2.25E-06	2.74E-05
WSW	4.40E-06	3.41E-05
W	7.56E-06	3.95E-05
WNW	1.14E-05	4.20E-05
NW	1.44E-05	3.97E-05
NNW	8.59E-06	3.26E-05
MAXIMUM VALUE	1.44E-05	4.20E-05

PRELIMINARY DRAFT

PRELIMINARY DRAFT

Discussion:

The calculation results shown in the previous table are the maximum 50 percent and 5 percent exceeded χ/Q values for the overall site and for each sector. The maximum 50 percent exceeded value is 1.44E-05 sec/m^3 and the maximum 5 percent exceeded value is 4.20E-05 sec/m^3.

The recipient is cautioned that these values are preliminary, and have not under gone the scrutiny of the QA process. This information will under go the appropriate QA checks in accordance with QAP-SIII-2, and a QA document will be released.

References:

Till, J.E. and Meyer, R.H. 1983. *Radiological Assessment – A Textbook on Environmental Dose Analysis.* NUREG/CR-3332, ORNL-5968. Washington, D.C.: U.S. Government Printing Office.

U.S. Nuclear Regulatory Commission. February 1983. *Regulatory Guide 1.145, Atmospheric Dispersion Models for Potential Accident Consequence Assessments at Nuclear Power Plants.* U.S. Nuclear Regulatory Commission Office of Standards Development.

U.S. Nuclear Regulatory Commission. November 1982. NUREG/CR-2858, PNL-4413. *PAVAN: An Atmospheric Dispersion Program for Evaluating Design Basis Accidental Releases of Radiological Materials from Nuclear Power Stations.* Battelle Memorial Institute, Pacific Northwest Laboratory.

PRELIMINARY DRAFT