9.3 Process Auxiliaries

9.3.1 Compressed and Instrument Air System

The compressed and instrument air system (CAS) consists of three subsystems; instrument air, service air, and high-pressure air. Instrument air supplies compressed air for air-operated valves and dampers. Service air is supplied at outlets throughout the plant to power air-operated tools and is used as a motive force for air-powered pumps. The service air subsystem is also utilized as a supply source for breathing air. Individually packaged air purification equipment is used to produce breathing quality air for protection against airborne contamination. The high-pressure air subsystem supplies air to the main control room emergency habitability system (VES), the generator breaker package, and fire fighting apparatus recharge station. The high-pressure air subsystem also provides a connection for refilling the VES storage tanks from an offsite source. Major components of the compressed and instrument air system are located in the turbine building.

9.3.1.1 Design Basis

9.3.1.1.1 Safety Design Basis

The compressed and instrument air system serves no safety-related function other than containment isolation and therefore has no nuclear safety design basis except for containment isolation. See subsection 6.2.3 for the containment isolation system.

9.3.1.1.2 Power Generation Design Basis

The instrument air subsystem provides filtered, dried, and oil-free air for air-operated valves and dampers. The instrument air subsystem consists of two compressors and associated support equipment and controls that are powered from switchgear backed by the nonsafety-related onsite standby diesel generators as an investment protection category load. The subsystem provides high quality instrument air as specified in the ANSI/ISA S7.3 standard (Reference 9.3.8.1).

The service air subsystem provides filtered, dried, and oil-free compressed air for service outlets located throughout the plant. The service air subsystem consists of two compressors and their associated support equipment and controls. Plant breathing air requirements are satisfied by using the service air subsystem as a supply source. Individually packaged air purification equipment is used to improve the service air to Quality Verification Level D breathing air as defined in ANSI/CGA G-7.1.

The high-pressure air subsystem consists of one compressor, its associated air purification system and controls, and a high-pressure receiver. It provides clean, oil-free, high-pressure air to recharge the main control room emergency habitability system cylinders, refill the individual fire fighting breathing air bottles, and recharge the generator breaker reservoir. Quality Verification Level E air as defined in ANSI/CGA G-7.1 is produced by this subsystem. See Section 6.4 for a description of the main control room habitability system.

9.3.1.2 System Description

9.3.1.2.1 General Description

Classifications of components and equipment in the compressed and instrument air system are given in Section 3.2. In accordance with NUREG-1275, instrument air quality meets the manufacturer's standards for pneumatic equipment supplied as a part of the plant. Intake filters for instrument air, service air, and high-pressure air compressors remove particulates 10 microns and larger.

Instrument Air Subsystem

The instrument air subsystem consists of two 100 percent capacity parallel air supply trains discharging to a common air distribution system. An air compressor, dryer, controls, and receiver comprise one air supply train. The two compressor trains join to a single instrument air header downstream of the receivers.

Provisions are made to temporarily cross connect the instrument and service air subsystems at the distribution header.

The instrument air line to the containment is normally open; however, air flow to the containment is monitored and a high flow alarm is provided to indicate a possible instrument air line rupture inside containment. Safety-related air-operated valves supplied by the system are identified in Table 9.3.1-1. None of these valves require instrument air to perform their safety-related function. The valves with an active safety-related function fail in the safe position on loss of instrument air pressure.

One instrument air compressor train, including its air dryer and associated equipment and controls, can be connected to each of the nonsafety-related onsite standby diesel generators. The compressors are cooled by water supplied from the component cooling water system (CCS). Refer to subsection 9.2.2 for details. The instrument air subsystem is shown schematically in Figure 9.3.1-1. Major system components are described in Table 9.3.1-2.

Service Air Subsystem

Two 100 percent capacity compressor trains are provided for the service air subsystem. These compressor trains consist of identical equipment and share a common air receiver that feeds the service air distribution system. Cooling water to the service air compressors is supplied from the component cooling water system. Refer to subsection 9.2.2 for details.

The service air line to containment is normally closed and is opened on an as-needed basis. The service air subsystem is shown schematically in Figure 9.3.1-1 and major system components are described in Table 9.3.1-3.

High-Pressure Air Subsystem

The high-pressure air subsystem consists of a high-pressure air compressor with an integral air purification system, controls, and a receiver.

The high-pressure air subsystem is manually operated and may be loaded on an onsite standby diesel generator. This subsystem supplies air to the main control room emergency habitability system, the generator breaker, and the fire fighting apparatus recharge station. The isolation valves to these locations are normally closed and are opened on an as-needed basis to refill the specified equipment air storage reservoirs. The high-pressure air subsystem is shown schematically in Figure 9.3.1-1 and major system components are described in Table 9.3.1-4.

9.3.1.2.2 Component Description

Instrument Air Subsystem

The instrument air subsystem consists of two air compressor trains. Each compressor train consists of a multistage, low-pressure, rotary screw, air compressor package, a desiccant dryer with a prefilter and afterfilter, and an air receiver. Each compressor package includes an intake filter, rotary screw compressor elements, silencer, intercooler, aftercooler, moisture separators, bleed-off cooler, oil cooler, oil reservoir, automatic load controls, relief valves, and a discharge air check valve. Each compressor train produces oil-free air.

Two instrument air receivers function as storage devices for compressed air. The receivers continue to supply the instrument air subsystem following a loss of the instrument air compressors until the receiver pressure drops below system requirements. Each air receiver is equipped with an automatic condensate drain valve and a pressure relief valve.

Two air dryer assemblies are provided for the instrument air subsystem. Each dryer assembly consists of a desiccant-filled, twin tower design. One tower may be used to dry air while the other tower goes through regeneration. When instrumentation senses a high dew point, the towers switch. The former operating tower then undergoes regeneration while the regenerated tower drys the instrument air.

Each dryer assembly includes a coalescing prefilter that removes oil aerosols and moisture droplets, as well as an afterfilter to remove desiccant dust.

The instrument air subsystem supplies ANSI/ISA S-7.3 high quality instrument air. Table 9.3.1-2 provides design information for the main components associated with the instrument air subsystem.

Service Air Subsystem

The service air subsystem consists of two air compressor trains. Each compressor train consists of a multistage, low-pressure, rotary screw, air compressor package, and a desiccant dryer with a prefilter and afterfilter. A common air receiver is provided for the two trains.

Each compressor package includes an intake filter, rotary screw compressor elements, silencer, intercooler, aftercooler, moisture separators, bleed-off cooler, oil cooler, oil reservoir, automatic load controls, relief valves, and a discharge air check valve. Each compressor train produces oil-free air.

The common service air receiver functions as a storage device for compressed air. This air receiver is equipped with an automatic condensate drain valve and a pressure relief valve.

Two air dryer assemblies are provided for the service air subsystem. Each dryer assembly consists of a desiccant-filled, twin tower design. One tower may be used to dry air while the other tower goes through regeneration. When instrumentation senses a high dew point, the towers switch. The former operating tower then undergoes regeneration while the regenerated tower drys the service air.

Each dryer assembly includes a coalescing prefilter that removes oil aerosols and moisture droplets, as well as an afterfilter to remove desiccant dust.

Table 9.3.1-3 provides design information for the main components associated with the service air subsystem.

High-Pressure Air Subsystem

The high-pressure air subsystem utilizes an air-cooled, oil-lubricated, four-stage, reciprocating-air compressor with an integral air purification system to produce oil-free air for high-pressure applications. The compressor train includes an intake filter, air-cooled intercoolers, interstage oil/water separators, an air-cooled aftercooler, a final oil/water separator, relief valves, an air purification system, discharge check valves, and a high-pressure receiver.

The high-pressure air subsystem supplies ANSI/CGA G-7.1 Quality Verification Level E air. See Table 9.3.1-4 for the design parameters for this system.

9.3.1.2.3 System Operation

Instrument Air Subsystem

The instrument air compressors are operated by a local pressure controller located in the instrument air distribution header, which can be programmed for various sequences of operation. Normally one compressor runs continuously loading and unloading as required to supply compressed air demand. The second compressor serves as a backup and starts automatically if the first unit fails or if demand exceeds the capacity of the operating compressor.

Air from the instrument air subsystem compressor packages discharges to the air dryers and then to the receivers where it is distributed to air-operated valves and dampers throughout the plant. Instrument air pressure is reduced by pressure regulators at the pneumatic component as required.

The onsite standby power system (diesel generators) provides an alternate source of electrical power for the instrument air compressor trains. One compressor train is supplied from each electrical load group.

Service Air Subsystem

The service air subsystem compressors are operated by a local controller that can be programmed for various sequences of operation. Normally one compressor runs continuously and loads and unloads as required to supply service air demand. The second compressor serves as a backup and starts automatically if the first compressor fails or demand exceeds the capacity of the operating compressor. Air from each service air subsystem compressor package discharges to an air dryer and then to the common receiver. Service air flows from the receiver to the various service air outlets throughout the plant.

Breathing air can be obtained from any service air subsystem outlet by attaching a portable individually packaged air purification system. The breathing air purification package consists of replaceable cartridge-type filters, a pressure regulator, carbon monoxide monitoring equipment, air supply hoses, and air supply devices. Carbon monoxide is controlled by a catalytic conversion to carbon dioxide within the package. Breathing air of a Quality Verification Level D or better is supplied to personnel from the packaged purification system in accordance with the requirements of ANSI/CGA G-7.1.

High-Pressure Air Subsystem

The high-pressure air subsystem is operated when a specific high-pressure source requires refilling to replace air lost to leakage or expended during plant operations. System isolation valves to the specified equipment are manually opened and the equipment storage reservoir is replenished from the high-pressure receiver. The compressor is then started to replenish the air stored in the high-pressure receiver.

Breathing air of a Quality Verification Level E is supplied from the integral high-pressure air purification system in accordance with the requirements of ANSI/CGA G-7.1. This integral air purification system utilizes a series of replaceable cartridge-type filters to produce breathing quality air. Breathing air connections of the high pressure air subsystem are incompatible with the breathing air connections of the service air subsystem. Carbon monoxide is controlled by a catalytic conversion to carbon dioxide within the package.

The onsite standby power system (diesel generators) provides an alternate source of electrical power for the high-pressure air compressor.

9.3.1.3 Safety Evaluation

The compressed and instrument air system has no safety-related function other than containment isolation and therefore requires no nuclear safety evaluation. Containment isolation functions are described in subsection 6.2.3.

The compressed and instrument air system is required for normal operation and startup of the plant. Air-operated valves that are essential for safe shutdown and accident mitigation are designed to actuate to the fail-safe position upon loss of air pressure. These air-operated valves utilize safety-related solenoid valves to control the air supply.

The instrument and service air subsystems are classified as moderate-energy systems. There are no adverse effects on safety-related components associated with a postulated failure of the instrument and service air piping.

The high-pressure air subsystem is classified as a high-energy system. The high-pressure compressor and receiver are located in the turbine building, which contains no safety-related, equipment or structures. Air piping routed in safety-related areas is 1 inch or less in diameter and the dynamic consequences of a rupture are not required to be analyzed. The high-pressure air subsystem is not required to operate following a design basis accident nor is it used for safe shutdown of the plant.

9.3.1.4 Tests and Inspections

System components, such as the air compressors and air dryers, are inspected or tested prior to installation. The installed compressed air system is inspected, tested, and operated to verify that it meets its performance requirements, including operational sequences and alarm functions.

Air compressors and associated components on standby are checked and operated periodically. Desiccant in the air dryers is changed when required.

Sample points are provided downstream of the air dryers in both the instrument and service air subsystems and downstream of the purifier in the high-pressure air subsystem. Periodic checks are made to ensure high quality instrument air as specified in the ANSI/ISA S-7.3 standard. Periodic checks on the high-pressure air compressor are made on a regular basis to verify that the breathing air meets the Quality Verification Level E as indicated in the ANSI/CGA G-7.1 standard.

During the initial plant testing prior to reactor startup, safety systems utilizing instrument air are tested as part of the safety system test to verify fail-safe operation of air-operated valves upon sudden loss of instrument air or gradual reduction of air pressure as described in Regulatory Guide 1.68.3. Section 1.9 summarizes conformance with Regulatory Guide 1.68.

9.3.1.5 Instrumentation Applications

An instrumentation package is included with each of the instrument and service air compressors. Each package consists of temperature and pressure transducers, indicators, and automatic protection devices. The temperature and pressure transducers support the automatic control modes of compressor operation. A manual mode of operation is also provided for each control system. Compressed air system indication and control are available in the main control room.

The high-pressure air subsystem includes pressure and carbon monoxide instrumentation, automatic protection devices, and temperature indication.

9.3.2 Plant Gas System

The plant gas system (PGS) provides hydrogen, carbon dioxide, and nitrogen gases to the plant systems as required.

Other gases, such as oxygen, methane, acetylene, and argon, are supplied in smaller individual containers and are not supplied by the plant gas system.

9.3.2.1 Design Basis

9.3.2.1.1 Safety Design Basis

The plant gas system serves no safety-related function and therefore has no nuclear safety design basis.

9.3.2.1.2 Power Generation Design Basis

The nitrogen portion of the plant gas system supplies nitrogen for pressurizing, blanketing, and purging of various plant components.

The hydrogen gas portion of the plant gas system supplies hydrogen to the main plant electrical generator for cooling as well as to other plant auxiliary systems.

The carbon dioxide portion of the plant gas system supplies carbon dioxide to the generator for purging of hydrogen and air during layup or plant outages.

9.3.2.2 System Description

Classification of equipment and components is given in Section 3.2.

9.3.2.2.1 General Description

The nitrogen portion of the plant gas system is a packaged system consisting of a liquid nitrogen storage tank and vaporizers. Nitrogen gas is supplied in both a high-pressure and a low-pressure subsystem. The high-pressure subsystem uses a pump to pressurize the gas supplying the accumulators in the passive core cooling system. The high-pressure supply is then reduced to supply makeup to the reactor coolant drain tank for purging and blanketing. Low-pressure nitrogen is provided for component purging, layup/blanketing, and pressurization.

The main steam isolation valves (MSIVs) and main feedwater isolation valves (MFIVs) use compressed nitrogen stored within the valve operators as the motive force to close the valves. The main steam isolation valves are described in subsection 10.3.2.2.4 and the main feedwater

isolation valves are described in subsection 10.4.7.2.2. Nitrogen makeup for these valves (if needed) is provided from portable high-pressure nitrogen bottles using temporary connections on the valves.

The packaged nitrogen system is located inside the turbine building.

The hydrogen gas portion of the plant gas system is a packaged system consisting of a liquid hydrogen storage tank and vaporizers to supply hydrogen gas to the main generator for generator cooling and to the demineralized water transfer and storage system to support removal of dissolved oxygen and to other miscellaneous services. The hydrogen supply package system is located outdoors at the hydrogen storage tank area.

The carbon dioxide portion of the plant gas system, which is a packaged system consisting of one liquid storage tank and a vaporizer, produces gaseous carbon dioxide to purge the main generator. This packaged system is located in the turbine building.

Liquid gas storage tanks are built in accordance with the ASME Boiler and Pressure Vessel Code, Section VIII, Division 1, 1989.

9.3.2.2.2 Component Description

Liquid Nitrogen Storage Tank

Liquid nitrogen is stored under its own vapor pressure as a saturated liquid in a dual wall tank. This tank supplies nitrogen for the high- and low-pressure nitrogen gas systems. The annular space between the inner and outer tank walls is filled with insulation and evacuated when the tank is cold.

Liquid Nitrogen Pump

A cryogenic liquid nitrogen pump is utilized to provide a supply of high-pressure nitrogen. It is a single-cylinder, positive displacement pump with the entire "cold" pumping assembly enclosed in a vacuum-jacket, which permits the pump to remain cold in the standby condition.

Nitrogen High-Pressure Ambient Air Vaporizer

Liquid nitrogen is vaporized by a high-pressure natural convection vaporizer, which vaporizes and superheats cryogenic nitrogen using heat from the ambient air.

Nitrogen Low-Pressure Ambient Air Vaporizer

The low-pressure vaporizer unit has two parallel banks. In the event of frost buildup on the active bank, flow is redirected to the opposite bank while the other bank defrosts.

Gaseous Nitrogen Storage Tubes

Gaseous nitrogen storage tubes are provided. These storage tubes provide short-term storage for high-pressure nitrogen.

Liquid Hydrogen Storage Tank

Cryogenic liquid hydrogen is stored in a dual wall tank. The annular space between the walls is insulated using a vacuum and wrapped reflective insulation to minimize heat leakage.

Hydrogen Ambient Air Vaporizers

Two parallel banks of vaporizers are provided. In the event of frost buildup on the active bank, flow is redirected to the opposite bank while the other bank defrosts.

Liquid Carbon Dioxide Storage Tank

Cryogenic liquid carbon dioxide is stored in an insulated dual wall tank to minimize heat transfer.

Carbon Dioxide Electric Vaporizer

The liquid carbon dioxide is vaporized using electric resistance heating.

9.3.2.2.3 System Operation

Liquid nitrogen is stored under its own vapor pressure as a saturated liquid. An economizer circuit minimizes product loss due to vessel boiloff under low-flow conditions. A pressure build circuit maintains pressure at a suitable level above line delivery pressures. For the low-pressure system, liquid is withdrawn, vaporized, and pressure regulated prior to delivery to the low-pressure nitrogen manifold. For high-pressure nitrogen, liquid is withdrawn by the pump, vaporized, and discharged into the high-pressure storage tubes. The gas is then pressure regulated and routed to the high-pressure nitrogen manifold.

Liquid hydrogen is stored in a cryogenic storage vessel complete with an economizer circuit and a pressure build circuit. Ambient air vaporizers turn the liquid to a gas, which is pressure regulated. See subsection 9.3.6 for further discussion of hydrogen use in the chemical and volume control system.

Liquid carbon dioxide is distributed from a cryogenic storage vessel, complete with an economizer circuit and a pressure build circuit. An electric vaporizer turns the liquid to a gas, which is pressure regulated for the generator purge.

9.3.2.3 Safety Evaluation

The plant gas system is required for normal plant operation and startup of the plant. The plant gas system is not required for safe shutdown of the plant. Therefore, it is not designed to meet seismic Category I requirements or single failure criterion. The plant gas system serves no safety-related function and has no safety design basis.

The nitrogen and carbon dioxide portions of the plant gas system are located inside the turbine building and the hydrogen system storage is located outside of the main buildings. The storage tanks are analyzed as a potential missile source. Refer to Section 3.5.

The effects of the plant gas system on main control room habitability are addressed in Section 6.4 including explosive gases and burn conditions for those gases. For explosions, the plant gas system is designed for conformance with Regulatory Guide 1.91.

9.3.2.4 Tests and Inspections

9.3.2.4.1 Storage Vessel Testing

- Each storage vessel is hydrostatically tested in accordance with the ASME Boiler and Pressure Vessel Code, Section VIII, Division 1, 1989.
- Each vessel is examined using the magnetic particle method.

9.3.2.5 Instrumentation Requirements

Low-level indication alarms are provided in the main control room for the liquid nitrogen and the hydrogen storage tank levels.

Temperature and pressure indications are provided at various points within the plant gas system.

9.3.3 Primary Sampling System

The AP600 primary sampling system (PSS) performs the following functions:

- Collects in normal operation mode both liquid and gaseous samples
- Collects in post-accident mode both diluted and/or undiluted liquid and gaseous samples
- Provides for local grab samples during normal operation mode

This system includes equipment to collect representative samples of the various process fluids, including reactor coolant system and containment air, in a manner that adheres to as-low-as-reasonably-achievable (ALARA) principles during normal and post-accident conditions.

The primary sampling system also includes provisions to route sample flow to a laboratory for continuous or intermittent sample analysis, as desired.

The primary sampling system provides a way to monitor the plant and various system conditions using the collected and analyzed samples.

A safety-related containment hydrogen analyzer provided to monitor the containment atmosphere following a postulated loss-of-coolant accident (LOCA) is described in subsection 6.2.4. A discussion of process radiation monitoring is provided in Section 11.5.

9.3.3.1 Design Bases

9.3.3.1.1 Safety Design Basis

The primary sampling system has no safety-related function, other than containment isolation and therefore requires no nuclear safety evaluation, other than containment isolation, which is described in subsection 6.2.3.

The equipment and seismic classification are discussed in Section 3.2.

9.3.3.1.2 Power Generation Design Basis

9.3.3.1.2.1 Sampling During Normal Plant Operations

During normal operation, the primary sampling system collects representative samples of fluids in the reactor coolant system (RCS) and auxiliary primary systems process streams and the containment atmosphere for analysis, as listed in Table 9.3.3-1. Local sample points, as listed in Table 9.3.3-2, are provided at various process points of the systems.

The results of the sample analyses are used to perform the following functions:

- Monitor core reactivity
- Monitor fuel rod integrity
- Evaluate ion exchanger (demineralizer) and filter performance
- Specify chemical additions to the various systems;
- Maintain acceptable hydrogen levels in the reactor coolant system
- Detect radioactive material leakage

The measurements are used to evaluate water chemistry and to recommend corrective action by the laboratory staff.

The primary sampling system component classification is provided in Section 3.2.

9.3.3.1.2.2 Post-Accident Sampling

The primary sampling system is designed to comply with the guidance of NUREG/CR-4330, (Reference 5) as supplemented by subsequent NRC guidance and recommendations including the NRC position presented in Reference 6 and applicable sections of Regulatory Guide 1.97 (Reference 7) for post-accident sampling and the requirements of 10 CFR 50.34 (f)(2)(viii), (xxvi), (xxviii).

As discussed in subsection 12.4.1.8, the system provides for the capability of promptly obtaining liquid reactor coolant water samples for radionuclide analysis. In addition, the system provides for boron analysis 8 hours post-accident, and for other analyses such as gross activity, dissolved gases, and chloride analysis 24 hours post-accident.

Containment atmosphere sampling for hydrogen analysis is performed by the hydrogen analyzer described in subsection 6.2.4, and is not required in this system. Containment samples for radionuclide analysis can be obtained promptly.

During the post-accident and accident recovery phase, the system is designed to collect and analyze grab samples from the following points (NUREG-0737):

- Reactor coolant system loops
- Containment sump
- Containment atmosphere

The plant operating staff performs chemical and radiochemical analyses on the collected samples in a manner similar to that during normal plant operations. The results are used to monitor the following:

- Core reactivity
- Fuel rod integrity
- Concentration of critical impurities

The information is used by the operators to determine appropriate corrective actions. Table 9.3.3-3 lists the locations of these sample points.

Excess samples and purge volumes from inside containment sample points collected during the post-accident period are returned to the containment sump.

9.3.3.2 System Description

The primary sampling system is a manually operated system. It collects representative samples of fluids from the reactor coolant system and various primary auxiliary system process streams for analysis by the plant operating staff. This sampling process can be performed during normal plant operations or post-accident operations. Most components and equipment are common to both operations.

In either phase of operation the primary sampling system consists of two separate portions: the liquid sampling portion and the gas sampling portion.

9.3.3.2.1 Nuclear Sampling System - Liquids

The liquid sampling portion of the primary sampling system collects samples from the reactor coolant system and the auxiliary systems and transports them to a common location in a sample room in the auxiliary building. Control and instrumentation is provided for safe, reliable operation. This portion of the system uses 1/4 inch stainless steel tubing. The small tubing flow area limits flow to less than chemical and volume control system makeup capacity in the event of a leak in the sampling lines. Dissolved gases in the reactor coolant system are collected in this system also.

Sample flow is routed to a grab sampling unit. This unit is in an enclosure, which controls the spread of contamination and provides shielding. The grab sampling unit is further shielded by a concrete wall to minimize radiation exposure.

Valves inside the grab sampling unit have long handles extending outside the enclosure and are manually operated. This arrangement allows the operator to obtain a sample quickly with minimum radiation exposure in both normal and post-accident operations. A schematic diagram is provided on the front of the grab sampling unit to illustrate the tube routing inside.

The primary sampling system shares most of the equipment and components between normal and post-accident operations. Since the motive force during normal operations is the system pressure, the sampling system is designed to reactor coolant system pressure. When system pressure is not available, an eductor supplies the motive force for sample collection.

A direct line from the grab sampling unit to the laboratory provides the capability for continuous liquid sampling and analysis with online monitors.

Prior to the collection of liquid samples either in the laboratory or in the grab sampling unit, the lines are purged with source liquid to provide representative samples. The purging flow returns to the effluent holdup tank of the liquid radwaste system during normal operations or to the containment sump during post-accident operations.

Figure 9.3.3-1 is a simplified sketch of the primary sampling system.

Provisions are also made in the grab sampling unit to dilute the concentrated and highly radioactive liquid during the post-accident recovery stage.

9.3.3.2.2 Nuclear Sampling System - Gaseous

This portion of the primary sampling system collects gaseous samples from the containment atmosphere. Post-accident containment atmosphere sampling for hydrogen analysis is not required. Gaseous sampling is conducted in the sample room in the auxiliary building, and it shares with the liquid sampling portion the grab sampling unit and the control panel.

However, it uses 3/8 inch stainless steel tubing. Similar to the liquid sampling system, the gas sample subsystem is also manually operated with extension stems on the valves. Only grab samples are collected for the gas sampling process. The lines are purged prior to sample collection to provide representative samples. The purged gas returns to the effluent holdup tank of the liquid radwaste system during normal operations or to the containment during post-accident operations.

Provisions are also made to dilute the gas sample. The dilution process uses nitrogen from a local gas bottle.

The gas sampling system uses an ejector as the motive force for sample collection. The ejector uses nitrogen from a local gas bottle as the motive force.

9.3.3.3 Containment Isolation Valves

Containment isolation valves are classified as Safety Class B. The lines penetrating the reactor containment meet the containment isolation criteria. See subsection 6.2.3.

Three lines penetrate the containment. One line carries the liquid samples from their sources to the grab sampling unit or the laboratory. The second line carries the containment air samples from their source to the sampling unit. The third line returns the liquid or containment air sampling flows to the containment sump. The valves fail closed.

These valves close on a containment isolation signal. In addition, the outside containment isolation valve in the liquid sampling path closes on a high sampling flow temperature or high radiation downstream of the sample cooler. This prevents the operator from working with high temperature fluid and minimizes the possibility of operator injury.

9.3.3.4 System Operation and Performance

The primary sampling system is manually operated. The tubing size and sampling flow rate are selected throughout the system to reduce the amount of purge flow and to provide turbulent sampling flow (to collect representative samples). A delay coil of tubing is installed inside containment to provide at least 60 seconds of transit time for the sampling fluid to exit the containment from the hot leg. This 60-second delay is needed for N-16 decay.

9.3.3.5 Design Evaluation

The primary sampling system has no safety function, other than containment isolation and therefore requires no nuclear safety evaluation, other than containment isolation.

Subsection 6.2.3 provides the safety evaluation for the containment isolation system. Primary sampling system lines penetrating the containment are isolated at the containment boundary by valves that close upon receipt of a containment isolation signal and by manual actuation. (See subsection 6.2.3 for a discussion of containment isolation.)

The primary sampling system connects to the reactor coolant system and the passive core cooling system (PXS) and therefore provides features consistent with ANSI standards and ASME codes to protect these system pressure boundaries.

The primary sampling system is not required for accident mitigation; but it collects samples from the reactor coolant system, the containment sump and the containment atmosphere in accordance with NUREG-0737 and NUREG/CR-4330.

The acceptability of the design of the primary sampling system is based on specific general design criteria and regulatory guides. The design of the primary sampling system is consistent with the criteria set forth in subsection 9.3.2, "Process and Post-Accident Sampling Systems," of the NRC's Standard Review Plan (Reference 8). The specific general design criteria identified in the Standard Review Plan are General Design Criteria 1, 2, 13, 14, 26, 41, 60, 63, and 64. See Section 1.9 for a discussion of regulatory compliance.

9.3.3.6 Inspection and Testing Requirements

9.3.3.6.1 Preoperational Testing

Preoperational testing is performed after installation and prior to plant startup. Proper operation of the primary sampling system is demonstrated during preoperational testing. A sample is drawn from the reactor coolant system, containment atmosphere and other sample points via the sampling system in order to verify proper system operation.

9.3.3.6.2 Operational Testing

The proper operation and availability of the liquid and gaseous sampling subsystems are proven by continued proper sampling operations.

9.3.3.7 Instrumentation Requirements

The primary sampling system uses indicators as required to facilitate manual operation and to verify sample conditions before samples are drawn. Radiation monitoring instruments are used to monitor the incoming fluid (liquid or gas) radioactivity level.

The temperature indicator inside the grab sampling unit provides a signal to close the outside containment isolation valve when the sampling flow temperature exceeds pre-set limits. Likewise, the radiation monitors also provide a signal to close the outside containment isolation valves when excessive radiation levels are detected, for operator protection.

9.3.4 Secondary Sampling System

The secondary sampling system (SSS) delivers representative samples of fluids from secondary systems to sample analyzer packages. Continuous online secondary chemistry monitoring detects impurity ingress and provides early diagnosis of system chemistry excursions in the plant. Secondary sampling monitors send control signals to the turbine

island chemical feed system that automatically injects corrosion control chemicals into the condensate and feedwater systems.

9.3.4.1 Design Basis

9.3.4.1.1 Safety Design Basis

The secondary sampling system serves no safety-related function and therefore has no nuclear safety design basis.

9.3.4.1.2 Power Generation Design Basis

The secondary sampling system monitors water samples from the condensate, feedwater, main steam, heater drain, steam generator blowdown, auxiliary steam supply, and condensate polishing systems, as listed in Table 9.3.4-1 and Table 9.3.4-2. Water quality analyses are performed on these samples to determine the following:

- pH
- Conductivity levels (specific and cation)
- Dissolved oxygen level
- Residual oxygen scavenger
- Sodium content
- Sulfate content.

The sample analyses are used to control water chemistry and to permit appropriate corrective action.

9.3.4.2 System Description

Classification of equipment and components for the secondary sampling system is given in Section 3.2. The sample points listed in Table 9.3.4-1 are continuously monitored. The sample points listed in Table 9.3.4-2 are selectively monitored (where a single analyzer package can be used to selectively monitor multiple sample points).

Sample analysis data from the continuous analyzers is recorded using computer systems that also provide trending capability of the measured process parameters. Measurements are used to automatically control condensate and feedwater system pH and dissolved oxygen levels by chemical addition. Refer to subsection 10.4.11 for further discussion of the turbine island chemical feed system.

Samples are analyzed and the results are used for automatic or manual control of the plant secondary water chemistry. After being analyzed, pure samples are returned to the condensate system. Sample lines containing reagents and those from sink drains are collected in the waste water system and processed for disposal. Each sample line has a grab sampling capability for laboratory analysis.

Roughing coolers are provided for the samples whose temperatures exceed 125°F. Samples are cooled to approximately 77°F by chilled water supplied to trim coolers.

9.3.4.3 Safety Evaluation

The secondary sampling system has no safety-related function and therefore requires no nuclear safety evaluation.

9.3.4.4 Tests and Inspections

Proper operation of the secondary sampling system is initially demonstrated during preoperational testing.

The system draws continuous and selective samples from the condensate, feedwater, main steam, and steam generator blowdown systems for automatic or manual water quality analysis. Calibration of the analyzers is checked periodically through laboratory analysis of a grab sample from the same process flow. The output of the continuous analyzers is recorded, and abnormal values are evaluated.

9.3.4.5 Instrumentation Applications

The secondary sampling system uses pressure, temperature, and flow indicators to facilitate operation and to verify sample conditions.

9.3.5 Equipment and Floor Drainage Systems

The equipment and floor drainage systems collect liquid wastes from equipment and floor drains during normal operation, startup, shutdown, and refueling. The liquid wastes are then transferred to appropriate processing and disposal systems.

Equipment and floor drainage is segregated according to the type of waste. Liquid wastes are classified and segregated for collection as follows:

- Radioactive liquid waste
- Nonradioactive liquid waste
- Chemical and detergent liquid waste
- Oily liquid waste

9.3.5.1 Design Basis

9.3.5.1.1 Safety Design Basis

The equipment and floor drainage systems are nonsafety-related and serve no safety-related function except for the backflow preventers in drain lines from containment cavities to the containment sump. No nuclear safety design basis is required except for the backflow

preventers described in Section 11.2. Single active failures do not prevent the proper function of the safety-related backflow preventers.

The floor drainage systems and equipment are designed to prevent damage to safety-related systems, structures, and equipment. Safety-related components are not damaged as a result of equipment and floor drain components failure from a seismic event. Floor drainage systems and equipment single failures will not prevent the proper function of any safety-related equipment.

9.3.5.1.2 Power Generation Design Basis

Nonradioactive liquid waste sumps and drain tanks that can be potentially radioactive during normal plant operation are provided with sampling capabilities. There are no permanent connections between the radioactive drain system and nonradioactive piping. Provisions for temporary diversion of contaminated water from normally nonradioactive drains to the liquid radwaste system are included.

Equipment drains are adequately sized to meet the flow requirements.

Radioactive sump vents are directed to the ventilation system exhaust ducts, serving the areas where the sump is located. The containment sump vents directly to the containment.

Drainage systems are drained by gravity. The slope of the drain lines is 1/8 inch per foot as a minimum. The drainage systems are designed not to compromise the integrity of the areas maintained under a slight negative pressure during normal plant operation. This is achieved by avoiding cross connection with adjacent areas that are not maintained under a slight negative pressure.

Radioactive drain systems are designed to avoid crud traps and to minimize drain traps.

Sump and drain tank pumps discharge at a flowrate adequate to prevent sump overflow for drain rates anticipated during normal plant operation, maintenance, decontamination, fire suppression system testing, and fire fighting activities. Sump and drain tank capacities provide a live storage capacity consistent with an operating period of approximately 10 minutes with one pump operating as a minimum. The containment sump pumping time between high and low level is approximately 3 minutes.

Plugging of the drain headers is minimized by designing them large enough to accommodate more than the design flow and by making the flow path as straight as possible. Drain headers are at least 4 inches in diameter.

9.3.5.2 System Description

9.3.5.2.1 General Description

The drainage systems include collection piping, equipment drains, floor drains, vents, traps, cleanouts, sampling connections, valves, collection sumps, drain tanks, pumps, and discharge piping. The general arrangement of the drainage systems is shown on Figure 9.3.5-1.

Radioactive Wastes

The radioactive waste drain system is arranged to receive inputs from the radiologically controlled areas of the auxiliary, annex, and radwaste buildings based on segregation of the liquid wastes into chemical and nonchemical drains. The radioactive waste drain system collects radioactive liquid wastes at atmospheric pressure from equipment and floor drainage of the radioactive portions of the auxiliary building, annex building, and radwaste building and directs these wastes to a centrally located sump located in the auxiliary building. The contents of the sump are pumped to the liquid radwaste system tanks. Drainage lines from the negative pressure boundary areas of the auxiliary, radwaste, and annex buildings do not terminate outside the negative pressure boundary without a normally closed valve or plugged drain to maintain the integrity of the negative pressure boundary.

The liquid radwaste system collects radioactive and borated liquid wastes from equipment and floor drains in containment. Waste from the equipment drains inside containment is drained to the reactor coolant drain tank. The liquid waste from floor drains, fan coolers, and the containment wall gutter inside containment is drained to the containment sump. The contents of the drain tank and sump are pumped out of containment for processing by the liquid radwaste system. Refer to Section 11.2 for further details.

The sumps, pumps, and associated valves for the drain systems are located outside of high-radiation areas to the extent practical.

Nonradioactive and Potentially Radioactive Waste Drains

The waste water system collects nonradioactive waste from floor and equipment drains in auxiliary, annex, turbine, and diesel generator building sumps or tanks. Selected normally nonradioactive liquid waste sumps and tanks are monitored for radioactivity to determine whether the liquid wastes have been inadvertently contaminated. If contaminated, the wastes are diverted to the liquid radwaste system for processing and ultimate disposal. Refer to subsection 9.2.9 for further details. Drainage lines from the positive pressure boundary areas of the auxiliary building do not terminate outside the positive pressure boundary without a closed valve, plugged drain, or water seal to maintain the integrity of the positive pressure boundary.

Chemical Waste Drains

The radioactive waste drain system collects chemical wastes from the auxiliary building chemical laboratory and decontamination solution drains from the annex building and directs these wastes to the chemical waste tank of the liquid radwaste system.

Detergent Waste Drains

The laundry and respirator cleaning functions that generate detergent wastes are performed offsite. Detergent wastes from hot sinks and showers are routed to the chemical waste tank.

Oily Waste Drains

The waste water system collects nonradioactive, oily, liquid waste in drain tanks and sumps. Drain tank and sump liquid wastes are pumped through an oil separator prior to further processing. The oil is collected in a tank for disposal.

Sampling for oil in the waste holdup tank of the liquid radwaste system is provided to detect oil contamination before the ion exchanger resins are damaged. Oily water is pumped from the tank through an oil adsorbing bag filter before further processing. The spent bag filters are transferred to drums and stored in the radwaste building as described in Section 11.4.

9.3.5.2.2 Component Description

General description and summaries of the design requirements for these components are provided below. Key equipment parameters are contained in Tables 9.3.5-1 and 11.2-2. Principal construction codes and standards and the classification applicable to the floor and equipment drainage systems are listed in Section 3.2.

Sumps and Drain Tanks

In general, the inlet drain lines to the sump or drain tank are kept submerged a minimum of 6 inches below pump shutoff level to prevent backgassing. The containment sump inlet is not submerged.

Sumps are covered to keep out debris. Covers are removable, or manholes are provided for access. The total capacity of each sump includes a 10 percent freeboard allowance to permit operation of high-high level alarms and associated controls before the overflow point is reached.

Each sump is fitted with a vent connection to exhaust potential sump gases into the room. Nonradioactive drain tanks are vented to the atmosphere. The reactor coolant drain tank is vented to the gaseous radwaste system (Section 11.3). Where necessary for the control of airborne radioactivity, the sump vents are routed to the ventilation system exhaust duct for the room.

Radioactive sumps are stainless steel construction. Nonradioactive collection sumps are constructed of concrete with corrosion resistant coating or liner.

Sump and Drain Tank Pumps

Sumps outside containment are provided with air diaphragm pumps mounted on the sump cover plate. Pumps are equipped with reliable, mechanical diaphragms of demonstrated acceptable design that are easy to maintain. Pumps and associated piping connections and accessories are designed for easy replacement of pump diaphragms. The containment sump pumps are described in Section 11.2. The turbine building drain tank pumps are described in subsection 9.2.9.

Valves

Air-operated valves are provided for on/off functions of air supply to the sump pump diaphragms. Swing check valves, where provided, are installed in horizontal pipe runs. Pressure control valves are provided to control air supply pressure to the sump pump diaphragms. Manual ball valves are provided for maintenance purposes.

9.3.5.2.3 System Operation

The equipment and floor drainage systems operate during all modes of normal plant operation. Liquid wastes drain by gravity to collection tanks or sumps. Drainage flowrates vary based on the status of the plant. Sump pumps disposing of collected radioactive wastes discharge to the liquid radwaste system for further processing. Nonradioactive liquid wastes are discharged to the waste water system.

Pump operation is automatic with manual override. The pumps are automatically started and stopped by preset high, high-high, and low level instrumentation.

Where sumps are provided with two pumps, the capability is provided to allow equalizing the operational period of each pump. For the radioactive waste drain system, when the first pump is started on high level, a portion of the flow is recycled to allow recirculation of the flow through a mixing eductor.

The sump and drain tank pumps are not required to operate during design basis accidents. Sump pumps in the containment are interlocked with the associated containment isolation valves. The pumps trip and the isolation valves close on receipt of containment isolation signals (see subsection 6.2.3).

The equipment and floor drainage systems can be operated either automatically or manually for cleanup following an accident, including fire, provided that the compressed and instrument air system and ac power are available, and the drainage systems and support systems are not disabled by the event.

9.3.5.2.4 Instrumentation Applications

Level indication is provided in the main control room for the sump in-containment to provide indication of the presence of reactor coolant from unidentified leaks (refer to subsection 5.2.5). The sump and the drain tank outside containment are monitored for water level. On high sump or tank level, the solenoid-operated three-way valve for the selected pump is energized to admit air to the pump diaphragm. On high-high sump or tank level, the solenoid-operated three-way valve for the remaining pump is also energized to admit air to that pump diaphragm. On low level, both pumps are stopped by deenergizing their respective solenoid valves. Operating status of the pumps is provided to the plant control system.

9.3.5.3 Safety Evaluation

The equipment and floor drainage systems are nonsafety-related except for backflow preventers in drain lines from containment cavities to the containment sump. No nuclear safety evaluation is required other than that described for the backflow preventers in Section 11.2.

9.3.5.4 Tests and Inspections

The operability of equipment and floor drainage systems dependent upon gravity flow can be checked by normal usage. Portions of these systems dependent upon pumps to discharge to interfacing systems may be checked through instrumentation and alarms via the plant control system and trouble alarms in the main control room during operation or test.

9.3.6 Chemical and Volume Control System

The chemical and volume control system is designed to perform the following major functions:

- **Purification** - maintain reactor coolant system fluid purity and activity level within acceptable limits.

- **Reactor coolant system inventory control and makeup** - maintain the required coolant inventory in the reactor coolant system; maintain the programmed pressurizer water level during normal plant operations.

- **Chemical shim and chemical control** - maintain the reactor coolant chemistry conditions by controlling the concentration of boron in the coolant for plant startups, normal dilution to compensate for fuel depletion and shutdown boration, and provide the means for controlling the reactor coolant system pH by maintaining the proper level of lithium hydroxide.

- **Oxygen control** - provide the means for maintaining the proper level of dissolved hydrogen in the reactor coolant during power operation and for achieving the proper oxygen level prior to startup after each shutdown.

- **Filling and pressure testing the reactor coolant system** - provide the means for filling and pressure testing the reactor coolant system. The chemical and volume control system does not perform hydrostatic testing of the reactor coolant system, which is only required prior to initial startup and after major, nonroutine maintenance, but provides connections for a temporary hydrostatic test pump.

- **Borated makeup to auxiliary equipment** - provide makeup water to the primary side systems that require borated reactor grade water.

- **Pressurizer Auxiliary Spray** - provide pressurizer auxiliary spray water for depressurization.

9.3.6.1 Design Bases

9.3.6.1.1 Safety Design Basis

The safety functions provided by the chemical and volume control system are limited to containment isolation of chemical and volume control system lines penetrating containment, termination of inadvertent reactor coolant system boron dilution, isolation of makeup on a steam generator or pressurizer high level signal, and preservation of the reactor coolant system pressure boundary, including isolation of normal chemical and volume control system letdown from the reactor coolant system. As outlined in Section 5.2, a portion of the chemical and volume control system inside containment that is defined as reactor coolant pressure boundary is nonsafety-related and uses an alternate classification.

9.3.6.1.2 Power Generation Design Basis

The principal functions of the chemical and volume control system are outlined above and include controlling reactor coolant system chemistry, purity, and inventory. The system provides some functions necessary for the continued normal operation of the plant. Reliability is achieved by the use of redundant equipment (pumps, filters, and demineralizers). The equipment classification for the chemical and volume control system is contained in Section 3.2.

9.3.6.1.2.1 Purification

The chemical and volume control system removes radioactive corrosion products, ionic fission products, and fission gases from the reactor coolant system to maintain low reactor coolant system activity levels. The chemical and volume control system purification capability considers occupational radiation exposure (ORE) to support ALARA goals.

The chemical and volume control system is designed to maintain the reactor coolant system activity level at less than the technical specification limit for normal operations, with design basis fuel defects. The technical specifications allow these limits to be exceeded for a specified duration. See Chapter 16.

The purification rate is based on minimizing occupational radiation exposure and providing access to the reactor coolant system equipment. The chemical and volume control system provides a reactor coolant system purification rate of at least one reactor coolant system mass per 16 hours.

The chemical and volume control system has sufficient reactor coolant system purification and degasification capability (in conjunction with the liquid radwaste system) to allow the reactor vessel head to be removed in a timely manner during a refueling shutdown. In addition, purification during shutdowns has positive impact on the occupational radiation exposure to workers during the outage. The chemical and volume control system supports the plant ALARA goals with the shutdown purification function.

9.3.6.1.2.2 Reactor Coolant System Inventory Control and Makeup

The chemical and volume control system provides a means to add and remove mass from the reactor coolant system, as required, to maintain the programmed inventory during normal plant operations. Operations that are accommodated include startup, shutdown, step load changes, and ramp load changes.

The chemical and volume control system is capable of maintaining a constant volume in the reactor coolant system, while the plant is being heated up or cooled down. During a heatup it is necessary to remove reactor coolant system mass due to expansion. The maximum rate of net expansion occurs at the end of the heatup, so the limiting case is based on controlling the pressurizer level during this phase of operation. This expansion is accommodated by the normal letdown path. During cooldown, it is necessary to add mass due to reactor coolant system shrinkage. The chemical and volume control system is capable of maintaining the minimum pressurizer level with makeup during cooldown from hot zero power to cold shutdown while maintaining normal purification flow. Ramp and step load changes, as well as load rejections, are accommodated by the reactor coolant system pressurizer level control system. The chemical and volume control system can function to accommodate normal pressurizer level control system makeup and letdown requirements.

The chemical and volume control system is designed to make up for leaks, including leaks up to 3/8-inch inside diameter and for anticipated steam generator tube leaks, allowing the plant to be taken to cold shutdown conditions without the use of safety-related makeup systems.

9.3.6.1.2.3 Chemical Shim and Chemical Control

The chemical and volume control system provides the means to vary the boron concentration in the reactor coolant system. The system also controls the reactor coolant system chemistry for the purpose of limiting corrosion and enhancing core heat transfer.

Chemical Shim

The concentration of boron in the reactor coolant system is changed, as required, to maintain the desired control rod position with core depletion. The chemical and volume control system has the capacity to accommodate a cold shutdown followed by a return to power at the end of core life and also (as an independent case) to borate the plant to cold shutdown immediately following return to power from refueling. The system has boration and dilution capacity to meet these requirements, as well as the capability to transfer effluents to other systems.

The chemical and volume control system boric acid solutions are stored at concentrations that do not require heat tracing or room temperatures above normal values. The 2.5 weight percent boric acid solution requires freeze protection but does not impose special ambient temperature requirements.

pH Control

Lithium hydroxide (Li7OH) is used to control the pH of the reactor coolant system. The required concentration of Li7OH is varied to minimize the formation of tritium.

9.3.6.1.2.4 Oxygen Control

The chemical and volume control system maintains the proper conditions in the reactor coolant system to minimize corrosion of the fuel and primary surfaces. During power operations, dissolved hydrogen is added to the reactor coolant system to eliminate free oxygen and to prevent ammonia formation. The chemical and volume control system is capable of maintaining the concentration of dissolved hydrogen in the reactor coolant system at a minimum of 25 cubic centimeters hydrogen, at standard temperature and pressure, per kilogram of coolant, assuming anticipated operating losses.

This concentration can be reduced to 15 cc/kg within 24 hours prior to shutdown. Prior to opening the reactor coolant system during a cold or refueling shutdown, the hydrogen concentration is reduced to approximately 5 cubic centimeters per kilogram. To prevent delays, the chemical and volume control system (in conjunction with the liquid radwaste system) is capable of making this 15 to 5 cubic centimeters per kilogram reduction within the time to achieve normal plant cooldown.

During plant startup from cold shutdown, the chemical and volume control system introduces an oxygen scavenger into the reactor coolant system. The solution is only used for oxygen control at low reactor coolant system temperatures during startup from cold shutdown conditions. At other times during plant operation, hydrogen is used for oxygen control.

9.3.6.1.2.5 Filling and Pressure Testing the Reactor Coolant System

The chemical and volume control system provides a means for filling and pressure testing the reactor coolant system. The chemical and volume control system also provides connections for a temporary hydrotest pump.

9.3.6.1.2.6 Borated Makeup

The chemical and volume control system provides makeup to the passive core cooling system accumulators, core makeup tanks, in-containment refueling water storage tank, and to the spent fuel pool at various boron concentrations.

9.3.6.2 System Description

The chemical and volume control system consists of regenerative and letdown heat exchangers, demineralizers and filters, makeup pumps, tanks, and associated valves, piping, and instrumentation. The system parameters are given in Table 9.3.6-1. The piping and instrumentation diagram for the chemical and volume control system is included as Figure 9.3.6-1.

9.3.6.2.1 Purification

9.3.6.2.1.1 Ionic Purification

The normal chemical and volume control system purification loop is inside containment and operates at reactor coolant system pressure, utilizing the developed head of the reactor coolant pumps as the motive force for the purification flow. During power operations, fluid is continuously circulated through the chemical and volume control system from the discharge of one of the reactor coolant pumps. It passes through the regenerative heat exchanger where it is cooled by the returning chemical and volume control system flow, and is further cooled by component cooling water in the letdown heat exchanger to a temperature compatible with the demineralizer resins. The letdown fluid flows through a mixed bed demineralizer, optionally through a cation bed demineralizer, and through a filter. It returns to the suction of a reactor coolant pump after being heated in the regenerative heat exchanger. The purification loop is at reactor coolant system pressure.

Since the motive force for the purification loop is the reactor coolant pump head in a closed loop with the reactor coolant system, continuous purification is provided without operating the chemical and volume control system makeup pumps.

The mixed bed demineralizers are provided in the purification loop to remove ionic corrosion products and certain ionic fission products. The demineralizers also act as filters. One mixed bed is normally in service, with a second demineralizer acting as backup in case the normal unit should become exhausted during operation. Each demineralizer and filter is sized to provide a minimum of one fuel cycle of service without changeout.

The mixed bed demineralizer in service can be supplemented by intermittent use of the cation bed demineralizer for additional purification in the event of fuel defects. In this case, the cation resin removes mostly lithium and cesium isotopes. The cation bed demineralizer has sufficient capacity to maintain the cesium-136 concentration in the reactor coolant below 1.0 microcurie per cubic centimeter with design basis fuel defects. Each mixed bed and the cation bed demineralizer is sized to accept the maximum purification flow. Filters are provided downstream of the demineralizers to collect particulates and resin fines.

During plant shutdowns when the reactor coolant pumps are stopped, the normal residual heat removal system provides the motive force for the chemical and volume control system purification. Purification flow from the normal residual heat removal system heat exchanger is routed through the chemical and volume control system letdown heat exchanger and then through the normal chemical and volume control system purification loop. Boron changes and dissolved gas control are still possible by operating the chemical and volume control system in a semiclosed loop arrangement.

9.3.6.2.1.2 Gaseous Purification

Removal of radiogases from the reactor coolant system are not normally necessary because the gases do not build up to unacceptable levels when fuel defects are within normally anticipated ranges. If radiogas removal is required because of high fuel defects, the chemical and volume control system can be operated by routing flow to the liquid radwaste system degassifier. In this configuration, the letdown fluid is depressurized by flowing through the letdown orifice. The letdown flow is routed outside of containment through the liquid radwaste system degassifier to one of the liquid radwaste system effluent holdup tanks, returned to the reactor coolant system with the chemical and volume control system makeup pumps. This provides efficient gas removal.

Removal of radioactive gas and hydrogen during shutdown operations is necessary to avoid extending the maintenance and refueling outages. The reactor coolant system pressure boundary cannot be opened to the containment atmosphere until the gas concentrations are reduced to low levels. The shutdown degassing process is accomplished by operating the chemical and volume control system in the open loop configuration. In addition, a line is provided to allow the letdown orifice to be manually bypassed, so gas removal can continue after the reactor coolant system has been depressurized.

9.3.6.2.2 Reactor Coolant System Inventory Control and Makeup

Changes in reactor coolant volume are accommodated by the pressurizer level program for normal power changes, including transition from hot standby to full-power operation and returning to hot standby. In addition, the pressurizer has sufficient volume, within the deadband of the level control program, to accommodate minor reactor coolant system leakage for some time. The chemical and volume control system provides inventory control to accommodate minor leakage from the reactor coolant system, expansion during heatup from cold shutdown, and contraction during cooldown. This inventory control is provided by letdown and makeup connections to the chemical and volume control system purification loop.

9.3.6.2.3 Chemical Shim and Chemical Control

The chemical and volume control system provides the following functions to support the water chemistry and chemical shim requirements of the reactor coolant system:

- Means of addition and removal of pH control chemicals for startup and normal operation.
- Means of addition and removal of soluble chemical neutron absorber (boron) and makeup water, at concentrations and rates compatible with normal plant operation.

Reactor coolant system chemistry changes are accomplished with a feed and bleed operation. The letdown and makeup paths are operated simultaneously and appropriate chemicals are provided at the suction of the reactor makeup pumps. In this situation chemistry changes are made as feed and bleed operations.

9.3.6.2.3.1 Chemical Shim

Reactor coolant system boron changes are required to compensate for fuel depletion, startups, shutdowns, and refueling.

To borate the reactor coolant system, the operator sets the makeup control system to automatically add a preset amount of boric acid by fully diverting the three-way valve in the pump suction to the boric acid tank, with delivered flow measured at the discharge of the makeup pumps. Dilution operates in a similar fashion. In either case, if the pressurizer level exceeds its control point, the letdown path to the liquid radwaste system holdup tanks is automatically opened.

Boric acid is provided to the boric acid tank by mixing 2.5 weight percent boric acid solution in the boric acid batching tank. Boric acid crystals are mixed with a mixer, while the mixture is heated to an appropriate temperature to provide efficient mixing by the batching tank immersion heater. After the boric acid crystals are dissolved, the solution is drained by gravity into the boric acid tank. No provisions are incorporated for boric acid recycle from the liquid radwaste system.

9.3.6.2.3.2 pH Control

The chemical agent used for pH control is lithium hydroxide (Li7OH). This chemical is chosen for its compatibility with the material and water chemistry of borated water, stainless steel, zirconium systems. In addition, lithium-7 is produced in the core region because of irradiation of the dissolved boron in the coolant. A chemical mixing tank is provided to introduce the solution to the suction of the makeup pumps, as required to maintain the proper concentration of Li7OH in the reactor coolant system.

The solution is poured into the chemical mixing tank and is then flushed to the suction manifold of the makeup pumps with demineralized water. A flow orifice is provided on the

demineralized water inlet pipe to allow chemicals to be flushed into the reactor coolant system at acceptable concentrations.

The concentration of lithium-7 in the reactor coolant system varies according to a pH control curve as a function of the boric acid concentration of the reactor coolant system. If the concentration exceeds the proper value, as it may during the early stages of core life when lithium-7 is produced in the core at a relatively high rate, the cation bed demineralizer is used in the letdown path in series with the mixed bed demineralizer to lower the lithium-7 concentration. Since the buildup of lithium is slow, the cation bed demineralizer is used only intermittently. When letdown is being diverted to the liquid radwaste system, the letdown flow is routed through the cation bed demineralizer for removal of as much lithium-7 and cesium as possible.

9.3.6.2.4 Oxygen Control

The chemical and volume control system provides control of the reactor coolant system oxygen concentration, both during startup by introducing an oxygen scavenger and during power operations by driving toward zero the equilibrium concentration of oxygen produced by radiolysis in the core by injecting hydrogen.

9.3.6.2.4.1 Startups

During plant startup from cold conditions, an oxygen scavenging agent is used. The oxygen scavenger solution is introduced into the reactor coolant system via the makeup flow and chemical mixing tank, in the same manner as described for lithium-7 addition. The oxygen scavenger is used for oxygen control only at startup from cold shutdown conditions.

9.3.6.2.4.2 Power Operation

Dissolved hydrogen is employed during normal power operation to control and scavenge oxygen produced due to radiolysis of water in the core region. Hydrogen makeup is supplied to the reactor coolant system by direct injection of high-pressure gaseous hydrogen. The hydrogen comes from a bottle outside containment, through a containment penetration and is mixed in the chemical and volume control system purification loop. Hydrogen removal from the reactor coolant system is not necessary because hydrogen is consumed in the core.

9.3.6.2.5 Reactor Coolant System Filling and Pressure Testing

Reactor coolant system filling is accomplished by using the chemical and volume control system makeup pumps to provide fluid at the proper boron concentration (refueling), taking suction from both the boric acid tank and the demineralized water tank. The makeup pumps can also take suction from a clean liquid radwaste system holdup tank, by opening the line to the makeup pumps from that holdup tank.

The chemical and volume control system makeup pumps produce sufficient head to pressure test the reactor coolant system after maintenance and refueling.

A temporary hydrotest pump is required for initial hydrotesting, which requires higher pressures than can be achieved with the makeup pumps.

9.3.6.2.6 Borated Makeup

The makeup pumps are used to provide makeup at the proper boron concentration to the passive core cooling system accumulators, core makeup tanks, in-containment refueling water storage tank, and to the spent fuel pool. Makeup to these locations is at boric acid concentration as required, which can be varied from 0 to 4375 parts per million (2.5 weight percent). A mixture of 2.5 weight percent boric acid and demineralized water is provided by taking suction from both the boric acid tank and the demineralized water tank.

9.3.6.3 Component Descriptions

The general descriptions and summaries of the chemical and volume control system components are provided below. The key equipment parameters for the chemical and volume control system components are contained in Table 9.3.6-2. Information regarding component classifications is available in Section 3.2. The purification subsystem inside containment is defined as reactor coolant pressure boundary. This subsystem is nonsafety-related and is constructed using standards outlined in subsection 3.2.2.6 to the ASME Code, Section III. See Section 5.2 for additional information on analysis requirements.

9.3.6.3.1 Chemical and Volume Control System Makeup Pumps

Two centrifugal makeup pumps are provided. These pumps are driven by ac motors, and flow is controlled by positioning a control valve in the common discharge line from the pumps. A cavitating venturi in the common discharge line limits the makeup flow and provides protection from excessive pump runout. Each pump has a recirculation loop with a heat exchanger and flow control orifice to provide adequate minimum flow for pump protection. The mini-flow heat exchanger is cooled by component cooling water.

The makeup pumps are arranged in parallel with common suction and discharge headers. Each provides full capability for normal makeup; thus, there is redundancy for normal operations. The normal makeup pump suction fluid comes from the boric acid tank and the demineralized water connection. A three-way valve in the suction header is positioned to provide a full range of concentrations.

One makeup pump is capable of maintaining normal reactor coolant system inventory with leaks up to a 3/8-inch inside diameter, without an actuation of the safety injection systems. The second pump can be manually started to provide additional reactor coolant makeup.

These pumps are used to pressure test the reactor coolant system.

Parts of the pump in contact with reactor coolant are constructed of austenitic stainless steel. The pump motor and lube oil are air-cooled.

9.3.6.3.2 Chemical and Volume Control System Heat Exchangers

Letdown Heat Exchanger

One single-shell pass U-tube letdown heat exchanger is provided. The heat exchanger is designed to cool the purification loop flow from the regenerative heat exchanger outlet temperature to the desired letdown temperature allowing the letdown to be processed by the demineralizers while maximizing the thermal efficiency of the chemical and volume control system.

The letdown heat exchanger outlet temperature is controlled by the operator by remotely positioning a component cooling system flow control valve.

The reactor coolant in the purification loop flows through the tubes, which are stainless steel, and component cooling water flows through the shell, which is carbon steel.

Miniflow Heat Exchangers

Two miniflow heat exchangers are provided, one in each makeup pump miniflow recirculation line. Each heat exchanger is designed to cool the flow through the chemical and volume control system makeup pump minimum flow recirculation lines to the desired temperature for pump protection. The makeup water flows through the tubes, which are stainless steel, and component cooling water flows through the shell, which is carbon steel.

Regenerative Heat Exchanger

One regenerative heat exchanger is provided. This heat exchanger is used to recover heat from the purification loop flow leaving the reactor coolant system by reheating the fluid entering the reactor coolant system. This provides increased thermal efficiency and also reduces thermal stresses on the reactor coolant system.

The design basis for this heat exchanger is the last hour of plant heatup, when expansion of the reactor coolant system requires a net removal of inventory. For this case the regenerative heat exchanger outlet temperature must be low enough to allow the letdown heat exchanger to cool the letdown to the desired temperature with anticipated cooling water temperatures.

The reactor coolant leaving the reactor coolant system flows through the tube side of this heat exchanger, and the returning fluid flows through the shell. This arrangement places the cleaner fluid on the shell side and the lower quality fluid on the tube side, where there are fewer crevices available for crud deposition.

9.3.6.3.3 Chemical and Volume Control System Tanks

Boric Acid Tank

One boric acid tank is provided. The tank is sized to allow for one shutdown to cold shutdown followed by a shutdown for refueling at the end of the fuel cycle.

The tank is vented to the atmosphere. Relatively little boric acid is used during power operation, since load follow is accomplished with gray rods and without changes in the reactor coolant system boron concentration. Therefore, the boric acid, which is injected has a negligible effect on the free oxygen level in the reactor coolant system.

The tank is a free-standing stainless steel cylindrical design, located outside of the buildings, with only normal freeze protection required to maintain solubility of the 2.5 weight percent boric acid.

Boric Acid Batching Tank

The boric acid batching tank is a cylindrical tank with an immersion heater used in the preparation of 2.5 weight percent boric acid. A mixer is included with the tank. The tank is constructed of austenitic stainless steel and is provided with fill, vent and drain connections.

Chemical Mixing Tank

The chemical mixing tank is a small vertical, cylindrical tank sized to provide sufficient capacity for injecting an oxygen scavenger solution necessary to provide a concentration of ten parts per million in the cold reactor coolant system for oxygen scavenging.

A variety of chemicals to be added to the primary system are mixed in the tank. The solution to be injected is placed into the mixing tank and then flushed to the suction of the makeup pumps with demineralized water.

The tank is constructed of austenitic stainless steel and is provided with fill, vent, and drain connections.

9.3.6.3.4 Chemical and Volume Control System Demineralizers

Cation Bed Demineralizer

One cation resin bed demineralizer is located downstream of the mixed bed demineralizers and is used intermittently to control the concentration of lithium-7 (pH control) in the reactor coolant system. The demineralizer is sized to accommodate maximum purification flow when in service, which is adequate to control the lithium-7 and/or cesium concentration in the reactor coolant.

The demineralizer vessel is designed for reactor coolant system pressure and is constructed of austenitic stainless steel, with connections for resin addition, replacement, flushing, and draining. The vessel incorporates a retention screen, an inflow screen, and mesh screens on the drain connections. The screens are designed to retain the resin with minimum pressure drop. The inflow screen prevents inadvertent flushing of the resin into the purification loop through the demineralizer inlet and also deflects the incoming flow to preserve a smooth resin bed.

Mixed Bed Demineralizers

Two mixed bed demineralizers are provided in the purification loop to maintain reactor coolant purity. A mixture of lithiated cation and anion resin is used in the demineralizer. Both forms of resin remove fission and corrosion products. Each demineralizer is sized to accept the full purification flow during normal plant operation and to have a minimum design life of one core cycle.

The construction of the mixed bed demineralizers is identical to that of the cation bed demineralizer.

9.3.6.3.5 Chemical and Volume Control System Filters

Makeup Filter

One makeup filter is provided to collect particulates in the makeup stream, such as boric acid tank sediment. The filter is designed to accept maximum makeup flow. The unit is constructed of austenitic stainless steel with a disposable synthetic cartridge and is designed for reactor coolant system hydrostatic test pressure.

Reactor Coolant Filters

Two reactor coolant filters are provided. The filters are designed to collect resin fines and particulate matter from the purification stream. Each filter is designed to accept maximum purification flow.

The units are constructed of austenitic stainless steel with disposable synthetic cartridges and are designed for reactor coolant system pressure.

9.3.6.3.6 Chemical and Volume Control System Letdown Orifice

One letdown orifice is provided in the letdown line, where fluid leaves the high-pressure purification loop before it exits containment. The orifice limits the letdown flow to a rate compatible with the chemical and volume control system equipment and also plant heatup and dilution requirements.

The orifice consists of an assembly that provides for permanent pressure loss without recovery and is made of austenitic stainless steel.

A manual bypass line is provided around the orifice to allow shutdown purification and degassing when the reactor coolant system pressure is low.

9.3.6.3.7 Chemical and Volume Control System Valves

The chemical and volume control system valves are stainless steel for compatibility with the borated reactor coolant. Isolation valves are provided at connections to the reactor coolant system. Lines penetrating the reactor containment meet the containment isolation criteria described in subsection 6.2.3.

Purification Stop Valves

These normally open, motor-operated valves are located inside containment and close automatically on a low pressurizer level signal from the protection and safety monitoring system to preserve reactor coolant pressure boundary and to prevent uncovering of the heater elements in the pressurizer. The valves fail "as is" on loss of power and manual control (open/auto/close) is provided in the main control room and at the remote shutdown workstation.

Letdown Flow Inside Containment Isolation Valve

This normally closed, fail closed, air-operated globe valve is located inside containment and isolates letdown to the liquid radwaste system. This valve automatically opens and closes on a plant control system signal from the pressurizer level control or a containment isolation signal from the protection and safety monitoring system. It automatically opens on high pressurizer level and closes when the pressurizer level returns to normal. It also closes on a high-high liquid radwaste system degassifier level or a containment isolation signal. This valve operator has a flow restricting orifice in the vent line so it closes more slowly than the letdown flow outside containment isolation valve. Manual control is also provided in the main control room and at the remote shutdown workstation.

Letdown Flow Outside Containment Isolation Valve

This normally closed, fail closed, air-operated globe valve is located outside containment and isolates letdown to the liquid radwaste system. This valve automatically opens and closes on a plant control system signal from the pressurizer level control system or a containment isolation signal from the protection and safety monitoring system. This valve operates in the same fashion as the letdown flow inside containment isolation valve. The letdown flow outside containment isolation valve closes more quickly than inside containment letdown flow isolation valve to limit seat wear of inside containment isolation valve. This valve operator has a flow restricting orifice in the air line, so it opens more slowly than inside containment letdown flow isolation valve. In addition, during brief periods of shutdown, when the reactor coolant system is water solid, this valve throttles to maintain the reactor coolant system pressure. Manual control is also provided in the main control room and at the remote shutdown workstation.

Makeup Stop Valve

This normally open, air-operated stop check valve is located inside containment and functions to isolate the flow in the charging line to the reactor coolant system. This valve can be closed from the main control room or the remote shutdown workstation to isolate charging downstream of the regenerative heat exchanger. This valve is closed to support the auxiliary spray function. The valve fails open on loss of power or loss of instrument air so the charging line to the reactor coolant system remains available.

Auxiliary Spray Line Isolation Valve

This normally closed, air-operated globe valve is located inside containment, downstream of the regenerative heat exchanger, and functions to isolate the auxiliary spray line to the reactor coolant system pressurizer. This valve is opened to provide flow to the auxiliary spray line during heatups and cooldowns to add chemicals or to collapse the steam bubble in the pressurizer. This valve fails closed on a loss of power or loss of instrument air to accomplish the function of preserving the reactor coolant pressure boundary. This valve closes automatically on a low-1 pressurizer level signal from the protection and safety monitoring system to preserve reactor coolant pressure boundary. This valve is operated from the main control room and the remote shutdown workstation.

Makeup Line Containment Isolation Valves

These normally open, motor-operated globe valves provide containment isolation of the chemical and volume control system makeup line and automatically close on a high-2 pressurizer level, high steam generator level, or high-2 containment radiation signal from the protection and safety monitoring system. The valves also close on a safeguards actuation signal coincident with high-1 pressurizer level. This allows the chemical and volume control system to continue providing reactor coolant system makeup flow, if the makeup pumps are operating following a safeguards actuation signal. These valves are also controlled by the reactor makeup control system and close when makeup to other systems is provided. Manual control is provided in the main control room and at the remote shutdown workstation.

Hydrogen Addition Containment Isolation Valve

This normally closed, fail closed, air-operated globe valve is located outside containment in the hydrogen addition line. The valve automatically closes on a containment isolation signal from the protection and safety monitoring system. Manual control is provided in the main control room and at the remote shutdown workstation.

Demineralized Water System Isolation Valves

These normally open, air-operated butterfly valves are located outside containment in the line from the demineralized water storage and transfer system. These valves close on a signal from the protection and safety monitoring system derived by either a reactor trip signal, a source range flux doubling signal, low input voltage (loss of ac power) to the 1E dc and

uninterruptable power supply system battery chargers, or a safety injection signal, isolating the demineralized water source to prevent inadvertent boron dilution events. Manual control for these valves is provided from the main control room and at the remote shutdown workstation.

Makeup Pump Suction Header Valve

This air-operated, three-way valve is automatically controlled by the makeup control system to provide the desired boric acid concentration of makeup to the reactor coolant system (boric acid, demineralized water, or blend based on the desired reactor coolant system boron concentration). The valve fails with the pump suction aligned to the boric acid tank on a loss of instrument air. This valve will also align to the boric acid tank on either a reactor trip, source range flux doubling signal, low input voltage (loss of ac power) to the 1E dc and uninterruptable power supply system battery chargers, or a safety injection signal from the protection and safety monitoring system. This valve also aligns the makeup pump suction to the boric acid tank when low pressure is detected in the demineralized water supply line to protect the pump from a loss of suction supply. Manual control for this valve is provided in the main control room and at the remote shutdown workstation.

Makeup Pump Suction Relief Valves

A relief valve is provided in the suction of each makeup pump to prevent overpressurization of the pump suction. These relief valves prevent overpressurization that might be caused by backleakage through the makeup pump discharge check valves when the pump suction valves are closed. The set pressure of these relief valves is equal to the pump suction design pressure. The relief capacity is sufficient to accommodate expected check valve back leakage rates.

Letdown Line Relief Valve

A relief valve is provided to prevent overpressurization of the letdown line connected to the waste processing system. This relief valve prevents overpressurization that might be caused by opening the letdown line with a closed valve in the waste processing system. The set pressure of this relief valve is equal to the design pressure of the line connecting to the waste processing system. The relief capacity is sufficient to accommodate a conservatively high letdown rate assuming minimum flow resistances in the piping, valves, orifices and equipment in the letdown line.

Resin Sluice Line Relief Valve

A relief valve is provided to prevent overpressurization of the line that is used to sluice resin from the mixed bed and cation bed demineralizers to the waste processing system. This relief valve prevents overpressurization that might be caused by opening the letdown line with a closed valve in the waste processing system. The set pressure of this relief valve is equal to the design pressure of the line it is connected to which is equal to the design pressure of the CVS purification equipment inside containment. The relief capacity is sufficient to

accommodate thermal expansion of the water that is trapped between the two containment isolation valves that might occur following an accident that results in heatup of the containment.

9.3.6.3.8 Piping Requirements

The chemical and volume control system piping that handles radioactive liquid is made of austenitic stainless steel. The piping joints and connections are welded, except where flanged connections are required for equipment removal for maintenance and hydrostatic testing.

9.3.6.4 System Operation and Performance

The operation of the chemical and volume control system for the various modes of reactor plant operation is described in the following subsections.

9.3.6.4.1 Plant Startup

Plant startup is the operation that brings the reactor plant from a cold shutdown condition to no-load operating temperature and pressure, and subsequently to power operation.

The makeup pumps initially fill the reactor coolant system via the purification flow return line. During filling, makeup water is drawn from the demineralized water connection and blended with boric acid from the boric acid tank to provide makeup at the desired reactor coolant system boron concentration. The reactor coolant system is vented via the reactor vessel head and the pressurizer. A vacuum fill subsystem may be used to enhance the reactor coolant fill operation.

The auxiliary spray line may be used to fill the pressurizer and establish proper water chemistry in the pressurizer. If water solid operation is desired, reactor coolant system pressure is controlled by operation of the letdown control valve and the makeup control valve. To accomplish this, a letdown flow path is established to the liquid radwaste system with the letdown orifice bypassed. The makeup flow rate is maintained by the makeup control valve at a constant value selected by the operators. At the same time, the letdown control valve controls letdown flow to maintain reactor coolant system pressure at a constant value, also selected by the operators. These water solid operations are not required if vacuum fill is used.

After the reactor coolant pumps are started, chemical treatment, using an oxygen scavenger, is performed. The oxygen scavenger is added to the reactor coolant during the initial stages of heatup to scavenge oxygen in the system. Subsequently, hydrogen makeup to the reactor coolant system is started, and the reactor coolant system hydrogen level is brought up to the normal operating point of approximately 30 cubic centimeters per kilogram.

The pressurizer heaters are used to heat up the water in the pressurizer and draw a steam bubble. As the steam bubble grows, effluent continues to be diverted to the liquid radwaste system through the chemical and volume control system letdown line. The makeup pumps are operated to supply demineralized water, so the reactor coolant system boron concentration

is reduced to the level required for criticality. Following attainment of pressurizer normal water level, the letdown flow control valve and the makeup pumps are set to operate only as necessary to maintain pressurizer level or on demand from the operator.

Criticality is achieved as follows:

- The reactor coolant system boron concentration is reduced to the calculated level by dilution, routing effluent from the chemical and volume control system purification loop to the liquid radwaste system, and by providing unborated makeup with the makeup pumps taking suction from the demineralized water storage tank.
- Chemical analysis is used to measure water quality, boron concentration, and hydrogen concentration.
- Appropriate control rods are withdrawn.
- Further adjustments in boron concentration are made to establish preferred control group rod positions.

9.3.6.4.2 Normal Operation

Normal operation consists of operation at steady power (base load) level, load follow operation, and hot standby.

9.3.6.4.2.1 Base Load Operation

At a constant power level, the chemical and volume control system purification loop operates continuously as a closed loop around a reactor coolant pump. The purification flow is approximately 100 gallons per minute with one mixed bed demineralizer and one reactor coolant filter in service. The chemical and volume control system makeup pumps and the letdown line to the liquid radwaste system are not normally operating. The makeup pumps are normally available and are set to start automatically on low pressurizer level. The boric acid blending valve in the pump suction permits the operator to preset the blend of boric acid and demineralized water to achieve the desired makeup concentration. The letdown control valve opens automatically, if the pressurizer level reaches its high (relative to programmed level) setpoint. Reactor coolant samples are taken to check boron and H_2 concentration, water quality, pH, and activity level.

Variations in power demand are accommodated automatically by control rod and gray rod movement. The only adjustments in boron concentration necessary are those to compensate for core burnup. These adjustments are made to maintain the rod control groups within their allowable limits by setting the makeup pumps to provide the required amount of demineralized water as makeup. If necessary, effluent is automatically routed to the liquid radwaste system to maintain the required pressurizer level.

9.3.6.4.2.2 Load Follow Operation

Load follow power changes and the resulting xenon changes are accommodated by the control rods and gray rods, with no changes required to the reactor coolant system boron concentration. The chemical and volume control system does not have load follow functions.

9.3.6.4.3 Plant Shutdown

9.3.6.4.3.1 Hot Shutdown

If required for periods of maintenance or following spurious reactor trips, the reactor is maintained subcritical, with the capability to return to full power within the period of time required to withdraw the control rods. During hot standby operation, the average temperature is maintained at no-load T_{avg} by initially dumping steam to the condenser to provide residual heat removal, or at later stages by running the reactor coolant pumps to maintain system temperature.

Initially the control rods are inserted and the core is maintained at or slightly above the minimum required shutdown margin. Following shutdown, xenon buildup occurs and increases the shutdown margin. The effect of xenon buildup increases the shutdown margin to a minimum of about 3 percent $\Delta k/k$ at about 9 hours following shutdown.

If rapid recovery is required, dilution of the system may be performed to counteract this xenon buildup. A shutdown group of rods is withdrawn during dilution to provide the capability for rapid shutdown if needed, and frequent checks are made on critical rod position.

9.3.6.4.3.2 Cold Shutdown

Cold shutdown is the operation that brings the reactor plant from normal operating temperature and pressure to a cold shutdown temperature and pressure for maintenance or refueling.

The chemical and volume control system purification loop continues to operate normally in advance of a planned shutdown. In addition, in the beginning of a shutdown, the chemical and volume control system is designed so the letdown flow is routed out of containment to the liquid radwaste system, where it is stripped of gases and returned to the makeup pump suction. This gas stripping is required for approximately 48 hours to reduce reactor coolant activity level and hydrogen level sufficiently, permitting personnel access for refueling or maintenance operations.

Before cooldown and depressurization of the reactor coolant system is initiated, the reactor coolant boron concentration is increased to the cold shutdown value. The operator sets the reactor makeup control to "borate" and selects the volume of boric acid solution necessary to perform the boration. Correct concentration is verified by reactor coolant samples. The operator sets the reactor makeup control for makeup at the shutdown reactor coolant boron concentration.

Contraction of the coolant during cooldown of the reactor coolant system results in actuation of the pressurizer level control system to maintain normal pressurizer water level. Makeup continues to be automatic, with the makeup pumps starting and stopping as required.

During shutdowns, after the reactor coolant pumps are stopped, the normal residual heat removal system provides the motive force for chemical and volume control system purification loop. Whenever the reactor coolant system is pressurized, the chemical and volume control system can be operated to provide purification. After the normal residual heat removal system is placed in service and the reactor coolant pumps are stopped, further cooling and depressurization of the pressurizer fluids are accomplished by charging through the auxiliary spray connection.

9.3.6.4.3.2.1 Ion Exchange Media Replacement

The initial and subsequent fill of ion exchange media is made through a resin fill nozzle on the top of the ion exchange vessel. When the media is spent and ready to be transferred to the solid radwaste system (WSS), the vessel is isolated from the process flow. The flush water line is opened to the sluice piping and demineralized water is pumped into the vessel through the normal process outlet connection upward through the media retention screen. The media fluidizes in the upward, reverse flow. When the bed has been fluidized, the sluice connection is opened and the bed is sluiced to the spent resin tanks in the solid radwaste system. Demineralized water flow continues until the bed has been removed and the sluice lines are flushed clean of spent resin.

9.3.6.4.3.2.2 Filter Cartridge Replacement

Replacement of spent filter cartridges is performed as described in subsection 11.4.2.3.2.

9.3.6.4.4 Abnormal Operation

9.3.6.4.4.1 Reactor Coolant System Leak

The chemical and volume control system is capable of making up for a small reactor coolant system leak with either makeup pump at reactor coolant system pressures above the low pressure setpoint.

9.3.6.4.5 Accident Operation

The chemical and volume control system can provide borated makeup to the reactor coolant system following accidents such as small loss-of-coolant accidents, steam generator tube rupture events, and small steam line breaks. In addition, pressurizer auxiliary spray can reduce reactor coolant system pressure during certain events such as a steam generator tube rupture.

To protect against steam generator overfill, the makeup function is isolated by closing the makeup line containment isolation valves, if a high steam generator level signal is generated. These valves also close and isolate the system on a high pressurizer level signal.

Some of the valves in the chemical and volume control system are required to operate under accident conditions to effect reactor coolant system pressure boundary and containment isolation, as discussed in subsection 9.3.6.3.7.

9.3.6.4.5.1 Boron Dilution Events

The chemical and volume control system is designed to address a boron dilution accident by closing either one of two redundant safety-related, air-operated valves from the demineralized water system to the makeup pump suction.

For dilution events occurring at power (assuming the operator takes no action), a reactor trip is initiated on either an overpower trip or an overtemperature ΔT trip. Following a reactor trip signal, the line from the demineralized water system is isolated by closing two safety-related, remotely operated valves. The three-way pump suction control valve aligns so the makeup pumps take suction from the boric acid tank. When the trip occurs while the makeup pumps are operating, the realignment of these valves causes the makeup pumps, if they continue to operate, to borate the plant.

For dilution events during shutdown, the source range flux doubling signal is used to isolate the line from the demineralized water system by closing the two safety-related, remotely operated valves. The three-way pump suction control valve aligns the makeup pumps to take suction from the boric acid tank and therefore stops the dilution. For refueling operations, administrative controls are used to prevent boron dilutions by verifying the valves in the line from the demineralized water system are closed and secured.

9.3.6.5 Design Evaluation

The chemical and volume control system has redundant, safety-related isolation valves and piping to protect the reactor coolant system pressure boundary, and is designed in accordance with ANSI/ANS-51.1 (Reference 4).

The chemical and volume control system lines that penetrate containment incorporate valve and piping arrangements, meeting the containment isolation criteria described in subsection 6.2.3.

Since the chemical and volume control system supplies unborated water to the reactor coolant system, the potential for inadvertent boron dilution events exists. A safety-related method of stopping an inadvertent boron dilution, which operates as described in subsection 9.3.6.4.5.1, is incorporated into the chemical and volume control system.

The chemical and volume control system also incorporates a safety-related method of isolating the makeup to the reactor coolant system upon receipt of a high steam generator level signal

or a high pressurizer level signal, as described in subsection 9.3.6.4.5. Other chemical and volume control system components are not safety-related.

Chemical and volume control system components and piping are compatible with the radioactive fluids they contain or functions they perform.

The design of the chemical and volume control system is based on specific General Design Criteria and regulatory guides. The design of the chemical and volume control system is compared to the criteria set forth in subsection 9.3.4, "Chemical and Volume Control System (PWR) (Including Boron Recovery System)," Revision 2, of the Standard Review Plan. The specific General Design Criteria identified in the Standard Review Plan section are General Design Criteria 1, 2, 3, 4, 14, 29, 30, 31, 32, 33, 53, 54, 56, 60, and 61 as discussed in Section 3.1. Additionally, subsection 1.9.1 discusses compliance with Regulatory Guides 1.26 and 1.29.

9.3.6.6 Inspection and Testing Requirements

The only required surveillance are for containment and reactor coolant pressure boundary isolation valves and boron dilution mitigation valves. These valves are identified as active and are tested in accordance with the in-service test provisions provided in Table 3.9-16.

Other chemical and volume control system components are monitored for acceptable performance as follows:

- Mixed and cation bed demineralizer -- monitor for bed exhaustion by comparing reactor coolant system samples to samples taken at the outlet of the reactor coolant filter.
- Reactor coolant and makeup filters -- remotely monitor differential pressure with the installed gages and change the filter cartridges, or switch to the backup filter when high differential pressure is detected with the installed pressure gage.

Inspection of the various components is required in accordance with their safety class. The safety classification assignments can be found in Section 3.2.

9.3.6.6.1 Preoperational Inspection and Testing

Preoperational tests are conducted to verify proper operation of the chemical and volume control system. The preoperational tests include valve inspection and testing and flow testing.

9.3.6.6.1.1 Valve Inspection and Testing

The inspection requirements of the chemical and volume control system valves that constitute the reactor coolant pressure boundary are consistent with those identified in subsection 5.2.4. The inspection requirements of the chemical and volume control system valves that isolate the lines penetrating containment are consistent with those identified in Section 6.6.

9.3.6.6.1.2 Flow Testing

Each chemical and volume control system pump is tested to measure the flow rate from each makeup pump to the reactor coolant system. Testing will be performed with the pump suction aligned to the boric acid tank and the discharge aligned to the reactor coolant system. Testing will also be performed with the pump suction aligned to the boric acid tank and the discharge aligned to the pressurizer auxiliary spray. Flow will be measured using instrumentation in the pump discharge line. Testing will confirm that each pump provides at least 100 gallons per minute of makeup flow at normal reactor coolant system operating pressure. This is the minimum flow rate necessary to meet the chemical and volume control system functional requirement of providing makeup and pressurizer spray to support the functions described in subsection 9.3.6.4.4.1. Testing is performed to verify that the maximum makeup flow with both pumps operating is less than 200 gpm, as assumed in the boron dilution analyses presented in subsection 15.4.6. Testing is performed with both pumps operating and taking suction from the demineralized water system. The chemical and volume control system is aligned to the reactor coolant system at a pressure at or near atmospheric pressure.

9.3.6.6.1.3 Boric Acid Tank Inspection

Inspection of the boric acid tank will be performed to verify that the volume in the boric acid tank is sufficient to provide 55,000 gallons of borated makeup to the reactor coolant system. This volume of boric acid is required to meet the functional requirement of providing makeup to the reactor coolant system to support the functions described in subsection 9.3.6.4.4.

9.3.6.7 Instrumentation Requirements

Process control instrumentation is provided to acquire data concerning key parameters about the chemical and volume control system. The location of the instrumentation is shown on the chemical and volume control system piping and instrumentation diagram.

The instrumentation furnishes input signals for monitoring and/or alarming. Indications and/or alarms are provided in the main control room for the following parameters:

- Pressure and differential pressure
- Flow
- Temperature
- Water level

The instrumentation also supplies input signals for control purposes to maintain proper system operation and to prevent equipment damage. Some specific control functions are listed below:

- **Purification isolation** - To preserve the reactor coolant pressure boundary in the event of a break in the chemical and volume control system loop piping. The purification stop valves close automatically on a signal from the protection and safety monitoring system generated by a low-1 pressurizer level signal. This isolation also serves as an equipment protection function to prevent uncovering of the heater elements in the pressurizer. One

of these valves also closes on high temperature downstream of the letdown heat exchanger, to protect the resin in the mixed bed and cation demineralizers from being exposed to temperatures that could damage the resins.

- **Containment isolation** - To preserve the containment boundary, containment isolation valves are provided in the letdown line to the liquid radwaste system, the chemical and volume control system makeup line, and the hydrogen addition line. These valves are opened or closed manually from the main control room and the remote shutdown workstation. Interlocks are provided to close these valves automatically upon receipt of a containment isolation signal from the protection and safety monitoring system and require operator action to reopen.

- **Letdown isolation valves** - The letdown isolation valves are used to isolate letdown flow to the liquid radwaste system in addition to the containment isolation function described above. The plant control system provides a signal to automatically open these valves on a high-pressurizer level signal derived from the pressurizer level control system. On a containment isolation signal from the protection and safety monitoring system, a high-high liquid radwaste system degassifier level signal (plant control system), or a low-pressurizer level signal (plant control system), these valves automatically close to provide isolation of the letdown line. The letdown isolation valves also receive a signal from the protection and safety monitoring system to automatically close and isolate letdown during midloop operations based on a low hot leg level. Manual control is provided from the main control room and at the remote shutdown workstation. The letdown flow control valve controls reactor coolant system pressure during startup, as described in subsection 9.3.6.4.1.

- **Demineralized water system isolation valves** - To prevent inadvertent boron dilution, the demineralized water system isolation valves close on a signal from the protection and safety monitoring system derived from either a reactor trip signal, a source range flux doubling signal, low input voltage (loss of ac power) to the 1E dc and uninterruptable power supply system battery chargers, or a safety injection signal providing a safety-related method of stopping an inadvertent dilution. The main control room and remote shutdown workstation provide manual control for these valves.

- **Makeup isolation valves** - To isolate the makeup flow to the reactor coolant system, two valves are provided in the chemical and volume control system makeup line. These valves automatically close on a signal from the protection and safety monitoring system derived from either a high-2 pressurizer level, high steam generator level signal, or a safeguards signal coincident with high-1 pressurizer level to protect against pressurizer or steam generator overfill. Manual control for these valves is provided in the main control room and at the remote shutdown workstation. In addition, the valves close on a high-2 containment radiation signal to protect containment integrity.

- **Makeup flow control** - To control makeup flow to the reactor coolant system, a flow controller, which operates in the makeup line, in conjunction with the makeup control

system is provided in the chemical and volume control system makeup pump discharge line. This flow controller controls makeup flow by modulating a flow control valve.

- **Makeup pump control** - The makeup pumps can be controlled from the main control room and at the remote shutdown workstation. On a signal from the plant control system generated by a low pressurizer level signal (relative to the programmed level), one of the chemical and volume control system makeup pumps starts automatically to provide makeup. The operating pump automatically stops when the pressurizer level increases to the correct value. During reactor coolant system boron changes (fuel depletion, startups, shutdowns, and refueling), the operator starts one of the makeup pumps after selecting the desired amount of boric acid.

  The makeup pumps can be used to provide reactor coolant system makeup following an accident such as a small loss-of-coolant accident, a steam generator tube rupture, or a small steam line break. Following a safeguards actuation signal, if necessary, the operator remotely opens the makeup line isolation valves. One makeup pump automatically starts to control the pressurizer level between 10 and 20 percent. In addition, a makeup pump may be used to provide pressurizer auxiliary spray in reducing the reactor coolant system pressure for certain accident scenarios.

9.3.7 Combined License Information

The Combined License applicant will address DCD 1.9.4.2.3, Issue 43 as part of training and procedures identified in section 13.5.

9.3.8 References

1. Instrument Society of America Standards, "Quality Standard for Instrument Air," S7.3; 1981.

2. ASME Boiler and Pressure Vessel Code, Section VIII, Division 1, "Pressure Vessels," 1989.

3. ASME Boiler and Pressure Vessel Code, Section VIII, Division 1, "Pressure Vessels," Subsection A, Part UG-99, Standard Hydrostatic Test, 1989.

4. ANSI/ANS-51.1-1983, "Nuclear Safety Criteria for the Design of Stationary Pressurized Water Reactor Plants."

5. NUREG/CR-4330, "Review of Light Water Reactor Regulatory Requirements."

6. SECY-93-087, "Policy, Technical and Licensing Issues Pertaining to Evolutionary and Advanced Light-Water Reactor (ALWR) Designs."

7. Regulatory Guide 1.97, Instrumentation for Light-Water-Cooled Nuclear Power Plants to Assess Plant and Environs Conditions During and Following an Accident, Revision 3.

8. NUREG 0800, Standard Review Plan Section 9.3.2 "Process and Post-Accident Sampling Systems."

Table 9.3.1-1 (Sheet 1 of 2)

SAFETY-RELATED AIR-OPERATED VALVES

Valve Number	Normal/Failure Position	Function
Compressed and Instrument Air System (CAS)		
CAS-PL-V014	NO/FC	Instrument Air Supply Outside Containment Isolation
Chemical and Volume Control System (CVS)		
CVS-PL-V045	NC/FC	Letdown Containment Isolation IRC
CVS-PL-V047	NC/FC	Letdown Containment Isolation IRC
CVS-PL-V084	NC/FC	Auxiliary Pressurizer Spray Line Isolation
CVS-PL-V092	NC/FC	Hydrogen Addition Containment Isolation
CVS-PL-V136A	NO/FC	Demineralized Water System Isolation
CVS-PL-V136B	NO/FC	Demineralized Water System Isolation
Passive Containment Cooling System (PCS)		
PCS-PL-V001A	NC/FO	Passive Containment Cooling Waste Storage Tank Isolation
PCS-PL-V001B	NC/FO	Passive Containment Cooling Waste Storage Tank Isolation
Primary Sampling System (PSS)		
PSS-PL-V011	NC/FC	Containment Isolation - Liquid Sample Line
PSS-PL-V023	NO/FC	Containment Isolation - Sample Return Line
PSS-PL-V046	NO/FC	Containment Isolation - Air Sample Line
Passive Core Cooling System (PXS)		
PXS-PL-V014A	NC/FO	Core Makeup Tank A Discharge Isolation
PXS-PL-V014B	NC/FO	Core Makeup Tank B Discharge Isolation
PXS-PL-V015A	NC/FO	Core Makeup Tank A Discharge Isolation
PXS-PL-V015B	NC/FO	Core Makeup Tank B Discharge Isolation
PXS-PL-V042	NO/FC	Nitrogen Supply Containment Isolation ORC
PXS-PL-V108A	NC/FO	Passive Residual Heat Removal Heat Exchanger Control
PXS-PL-V108B	NC/FO	Passive Residual Heat Removal Heat Exchanger Control
PXS-PL-V130A	NO/FC	In-Containment Refueling Water Storage Tank Gutter Isolation
PXS-PL-V130B	NO/FC	In-Containment Refueling Water Storage Tank Gutter Isolation

Table 9.3.1-1 (Sheet 2 of 2)

SAFETY-RELATED AIR-OPERATED VALVES

Valve Number	Normal/Failure Position	Function
Normal Residual Heat Removal System (RNS)		
RNS-PL-V061	NC/FC	Shutdown Purification Flow Isolation
Steam Generator System (SGS)		
SGS-PL-V036A	NO/FC	Steam Line Condensate Drain Isolation
SGS-PL-V036B	NO/FC	Steam Line Condensate Drain Isolation
SGS-PL-V074A	NO/FC	Steam Generator Blowdown Isolation
SGS-PL-V074B	NO/FC	Steam Generator Blowdown Isolation
SGS-PL-V075A	NO/FC	Steam Generator Series Blowdown Isolation
SGS-PL-V075B	NO/FC	Steam Generator Series Blowdown Isolation
SGS-PL-V086A	NC/FC	Steam Line Condensate Drain Control
SGS-PL-V086B	NC/FC	Steam Line Condensate Drain Control
SGS-PL-V233A	NC/FC	Power Operated Relief Valve
SGS-PL-V233B	NC/FC	Power Operated Relief Valve
SGS-PL-V240A	NO/FC	Main Steam Isolation Valve Bypass Isolation
SGS-PL-V240B	NO/FC	Main Steam Isolation Valve Bypass Isolation
SGS-PL-V250A	NO/FC	Main Feedwater Control
SGS-PL-V250B	NO/FC	Main Feedwater Control
SGS-PL-V255A	NC/FC	Startup Feedwater Control
SGS-PL-V255B	NC/FC	Startup Feedwater Control
Main Control Room Emergency Habitability System (VES)		
VES-PL-V022A	NC/FO	Relief Isolation Valve A
VES-PL-V022B	NC/FO	Relief Isolation Valve B
Containment Air Filtration System (VFS)		
VFS-PL-V003	NC/FC	Containment Purge Inlet Containment Isolation Valve
VFS-PL-V004	NC/FC	Containment Purge Inlet Containment Isolation Valve
VFS-PL-V009	NC/FC	Containment Purge Discharge Containment Isolation Valve
VFS-PL-V010	NC/FC	Containment Purge Discharge Containment Isolation Valve
Liquid Radwaste System (WLS)		
WLS-PL-V055	NC/FC	Sump Discharge Containment Isolation IRC
WLS-PL-V057	NC/FC	Sump Discharge Containment Isolation ORC
WLS-PL-V067	NC/FC	Reactor Coolant Drain Tank Gas Outlet Containment Isolation IRC
WLS-PL-V068	NC/FC	Reactor Coolant Drain Tank Gas Outlet Containment Isolation ORC

Table 9.3.1-2

NOMINAL COMPONENT DESIGN DATA - INSTRUMENT AIR SUBSYSTEM

Air Compressors

Quantity	2
Type	Rotary
Capacity, each (scfm)	800
Design pressure (psig)	150

Air Receivers

Quantity	2
Capacity, each (ft^3)	672
Design pressure (psig)	150

Prefilters

Quantity	2
Type	Coalescing

Air Dryers

Quantity	2
Type	Desiccant/Purge Air Regenerative
Capacity, each (scfm)	800
Operating pressure dew point, maximum (°F)	-28

Afterfilters

Quantity	2
Type	Particulate

Table 9.3.1-3

NOMINAL COMPONENT DESIGN DATA - SERVICE AIR SUBSYSTEM

Air Compressor

Quantity	2
Type	Rotary
Capacity, each (scfm)	800
Design pressure (psig)	150

Air Receiver

Quantity	1
Capacity (ft^3)	672
Design pressure (psig)	150

Prefilters

Quantity	2
Type	Coalescing

Air Dryer

Quantity	2
Type	Desiccant/Purge Air Regenerative
Capacity, each (scfm)	800
Design pressure dew point, maximum (°F)	-28

Afterfilters

Quantity	2
Type	Particulate

Table 9.3.1-4

NOMINAL COMPONENT DESIGN DATA - HIGH-PRESSURE AIR SUBSYSTEM

Air Compressor

Quantity	1
Type	Reciprocating
Capacity (scfm)	60
Design pressure (psig)	5000

Breathing Air Purifier

Quantity	1
Type	Molecular Sieve/Activated Carbon
CO to CO_2 conversion	Catalysis
Air supply quality level	E

Air Receiver

Quantity	1
Capacity, water volume (ft^3)	46
Design pressure (psig)	4000

Table 9.3.3-1

PRIMARY SAMPLING SYSTEM SAMPLE POINTS - NORMAL PLANT OPERATIONS (LIQUID AND GASEOUS)

Sample Point Name	Type of Sample[a]
Liquid Sample	
1. RCS Hot Leg (before CVS demineralizer)	Grab
2. Pressurizer Liquid Space	Grab
3. CVS Demineralizer Downstream	Grab
4. PXS Accumulators	Grab
5. PXS Core Makeup Tanks (at top)	Grab
6. PXS Core Makeup Tanks (at bottom)	Grab
7. Containment Sump (pump discharge)	Grab
Gaseous Sample	Grab
8. Containment Air	Grab

Note:

a. This column shows methods to obtain a sample for chemical analysis. It does not specify the frequency of sampling nor does it specify actual location of sample collection. "Grab" means that a grab sample is required for the intended chemical analysis. Depending on the sampling condition, this grab sample can be obtained in the laboratory or in the grab sampling unit.

Table 9.3.3-2 (Sheet 1 of 4)

LOCAL SAMPLE POINT NOT IN THE PRIMARY SAMPLING SYSTEM (NORMAL PLANT OPERATIONS)

Sample Point Name	Available Number of Points	Type of Sample[a]	Process Measurement
Liquid Sample			
1. CVS boric acid tank	1	Grab	pH, chlorine, fluorine, boron, silica, suspended solids, radioisotopic liquid, oxygen
2. CVS boric acid batching tank	1	Grab	Boron, chlorine, fluorine
3. Residual heat removal heat exchanger	2	Grab	Radioisotopic liquid, suspended solids, radioisotopic gas, gross specific activity, strontium, iron, tritium, hydrogen, I-131, conductivity, pH, oxygen, chlorine, fluorine, boron, aluminum, silica, lithium radio-isotopic liquid, lithium radioisotopic particulate, magnesium, sulfate, calcium, lithium
4. PXS IRWST	1	Grab	pH, Oxygen, fluorine, boron, conductivity, gross specific activity, sodium, sulfate, silica
5. Main Steam Line (Outlet SG 1)	1	Continuous	Radiation monitor (See Section 11.5, Table 11.5-1)
6. Main Steam Line (Outlet SG 2)	1	Continuous	Radiation monitor (See Section 11.5, Table 11.5-1)
7. BDS steam generator blowdown	1	Grab	Tritium, gross radioactivity and identification and concentration of principal radionuclide and alpha emitters
8. SFS purification (Upstream & downstream of SFS ion exchangers) (spent fuel pool treatment)	2	Grab	Conductivity, pH, chloride, silica, corrosion product metals, gross activity, corrosion product activity, fission product activity, I-131, tritium, turbidity, boron, corrosion product metals, organic impurities
9. PCS water storage tank	1	Grab	Hydrogen peroxide
10. Reactor Coolant drain tank	1	Grab	Gross radioactivity and identification and concentration of principal radionuclide and alpha emitters. Dissolved gases.

Table 9.3.3-2 (Sheet 2 of 4)

LOCAL SAMPLE POINT NOT IN THE PRIMARY SAMPLING SYSTEM (NORMAL PLANT OPERATIONS)

Sample Point Name	Available Number of Points	Type of Sample[a]	Process Measurement
11. WLS degasifier (downstream of degasifier discharge pump)	1	Grab	Dissolved gases
12. CCS component cooling surge tank	1	Grab	pH, sodium, chloride, silica, corrosion product metals, corrosion inhibitors
13. CCS loops (downstream of CCS pumps)	2	Grab	pH, sodium, chloride, silica, corrosion product metals, tritium, gross radioactivity and identification and concentration of principal radionuclide and alpha emitters
14. CCS hot leg (upstream of CCS pumps)	1	Continuous	Radiation monitor (See Section 11.5, Table 11.5-1)
15. WLS discharge (liquid radwaste effluent)	2	Continuous	Radiation monitor (See Section 11.5, Table 11.5-1)
16. WLS effluent holdup tanks MT05A, B	2	Grab	Gross radioactivity and identification and concentration of principal radionuclide and alpha emitters
17. WLS waste holdup tanks MT06A, B	2	Grab	Gross radioactivity and identification and concentration of principal radionuclide and alpha emitters
18. WLS monitor tanks MT07A, B, C	3	Grab	Tritium, gross radioactivity and identification and concentration of principal radionuclide and alpha emitters. State and federal environmental discharge requirements such as pH, suspended solids, oil and grease, iron, copper, sodium nitrite
19. WLS ion exchanger pre-filter (downstream)	1	Grab	Suspended solids
20. WLS ion exchanger after-filter (downstream)	1	Grab	Suspended solids

Table 9.3.3-2 (Sheet 3 of 4)

LOCAL SAMPLE POINT NOT IN THE PRIMARY SAMPLING SYSTEM (NORMAL PLANT OPERATIONS)

Sample Point Name	Available Number of Points	Type of Sample[a]	Process Measurement
21. WLS chemical waste tank	1	Grab	Tritium, gross radioactivity and identification and concentration of principal radionuclide and alpha emitters
22. WSS spent resin tank (liquid)	1	Grab	Tritium, gross radioactivity and identification and concentration of principal radionuclide and alpha emitters
23. SWS blowdown (service water)	1 1	Continuous Grab	Radiation monitor (See Section 11.5, Table 11.5-1) Tritium, gross radioactivity and identification and concentration of principal radionuclide and alpha emitters
24. WWS turbine building drain tank	2	Grab	Tritium, gross radioactivity and identification and concentration of principal radionuclde and alpha emitters
25. CPS (secondary coolant) spent resin sluice line (liquid)	1	Grab	Tritium, gross radioactivity and identification and concentration of principal radionuclide and alpha emitters
Gaseous Sample			
26. VES MCR emergency air supply headers	2	Grab	Air quality, oxygen, carbon monoxide, carbon dioxide, contaminants
27. WGS effluent discharge to environment	1	Continuous	Radiation monitor (See Section 11.5, Table 11.5-1)
28. WGS inlet	1	Continuous	Oxygen, hydrogen, moisture
29. WGS carbon bed vault	1	Continuous	Hydrogen
30. WGS delay bed outlets MV02A, B (waste gas holdup)	2	Grab	Moisture, noble gases, iodine, particulates, tritium
31. Condenser air removal system[b] (including hogging)	1	Grab	Iodine, noble gases, tritium

Table 9.3.3-2 (Sheet 4 of 4)

LOCAL SAMPLE POINT NOT IN THE PRIMARY SAMPLING SYSTEM (NORMAL PLANT OPERATIONS)

Sample Point Name	Available Number of Points	Type of Sample[a]	Process Measurement
32. Gland seal system[b]	1	Grab	Iodine, noble gases, tritium
33. Plant vent (including containment purge, auxiliary building ventilation, fuel storage and radwaste area ventilation discharge)	1	Continuous & Grab[c]	Iodine, noble gases, particulates

Notes:

a. This column shows methods to obtain a sample for analysis. "Grab" means that a grab sample is required for the intended analysis. Depending on the sampling condition, this grab sample can be obtained in the laboratory or in the grab sampling unit. "Continuous" means that the required analysis is performed via a probe that monitors the sampling steam continuously.

b. Continuous monitoring of discharge for radiation provided in turbine island vent (See Section 11.5, Table 11.5-1).

c. Includes analysis for tritium.

Table 9.3.3-3

PRIMARY SAMPLING SYSTEM SAMPLE POINTS - POST-ACCIDENT OPERATIONS (LIQUID AND GASEOUS)

Sample Point Name	Type of Sample[a]
Liquid Sample	
1. RCS hot leg (before CVS demineralizer)	Grab
2. Containment sump (pump discharge)	Grab
Gaseous Sample	
3. Containment Atmosphere	Grab

Note:

a. This column shows methods to obtain a sample for chemical analysis. It does not specify the frequency of sampling nor does it specify actual location of sample collection, "Grab" means that a grab sample is required for the intended chemical analysis.

Table 9.3.4-1 (Sheet 1 of 2)

SECONDARY SAMPLING SYSTEM (CONTINUOUS MEASUREMENTS)

Continuous Sample Points	Process Measurements
Hotwell (Tube Bundle Condenser Shell A)	Specific Conductivity Sodium
Hotwell (Tube Bundle Condenser Shell B)	Specific Conductivity Sodium
Condensate Pump Discharge	Specific Conductivity Cation Conductivity Sodium pH Dissolved Oxygen
Deaerator Inlet (Condensate)	Specific Conductivity Cation Conductivity Sodium pH Oxygen Scavenger Residual Dissolved Oxygen
Feedwater	Specific Conductivity Cation Conductivity Sodium Dissolved Oxygen pH Oxygen Scavenger Residual
Steam Generator Blowdown (SG 1)	Specific Conductivity Cation Conductivity Sodium pH Sulfate Dissolved Oxygen
Steam Generator Blowdown (SG 2)	Specific Conductivity Cation Conductivity Sodium pH Sulfate Dissolved Oxygen

Table 9.3.4-1 (Sheet 2 of 2)

SECONDARY SAMPLING SYSTEM (CONTINUOUS MEASUREMENTS)

Main Steam System (SG 1)	Cation Specific Conductivity Cation Conductivity Sodium pH Dissolved Oxygen
Main Steam System (SG 2)	Cation Specific Conductivity Cation Conductivity Sodium pH Dissolved Oxygen

Table 9.3.4-2

SECONDARY SAMPLING SYSTEM
(SELECTIVE MEASUREMENTS)

Condenser Tube Bundle B (North Side)
Condenser Tube Bundle B (South Side)
Heater Drain (LP Heater 1A)
Heater Drain (LP Heater 1B)
Heater Drain (MSR Tube Drain)
Heater Drain (MSR Shell Drain)
Auxiliary Steam
Auxiliary Boiler Feedwater
Auxiliary Boiler Drum
Auxiliary Boiler Condensate
Condensate Polisher Outlet
Heater Drain (Heater 6)
Deaerator Outlet (Feedwater)
Startup Feedwater

Table 9.3.5-1

COMPONENT DATA - RADIOACTIVE WASTE DRAINS SYSTEM (NOMINAL VALUES)

Drain Sump

Capacity (gal)	1400
Design pressure	Atmospheric
Design temperature (°F)	150
Material	Stainless steel

Drain Sump Pumps

Quantity per sump	2
Design flow rate (gpm)	125
Pump type	Pneumatic double diaphragm
Material	Stainless steel

Table 9.3.6-1

NOMINAL CHEMICAL AND VOLUME CONTROL SYSTEM PARAMETERS

Purification flow rate (gpm)	100[a]
Normal boration flow rate (gpm)	100
Normal dilution flow rate (gpm)	100
Temperature of reactor coolant entering chemical and volume control system (assumed) (°F)	535
Expected life of demineralizer resin	1 fuel cycle
Normal temperature of effluent to liquid radwaste system (°F)	130
Flow rate to liquid radwaste system (gpm)	100

Note:

a. Volumetric flow rates are based on 130°F and 2300 psia.

Table 9.3.6-2 (Sheet 1 of 3)

CHEMICAL AND VOLUME CONTROL SYSTEM
NOMINAL EQUIPMENT DESIGN PARAMETERS

Pumps

Makeup Pumps

Number	2
Type	Multistage horizontal centrifugal
Design pressure (psig)	3,100
Design flow (gpm)	140
Material	Stainless Steel (SS)

Heat Exchangers

Regenerative Heat Exchanger

Number	1
Type	Counterflow

	Shell Side	Tube Side
Design pressure (psig)	3,100	3,100
Design temperature (°F)	600	650
Design flow (lb/hr)	41,580	49,710
Material	SS	SS

Letdown Heat Exchanger

Number	1
Type	U-Tube

	Shell Side	Tube Side
Design pressure (psig)	150	3,100
Design temperature (°F)	200	650
Design flow (lb/hr)	224,034	49,710
Material	Carbon Steel	SS

Table 9.3.6-2 (Sheet 2 of 3)

CHEMICAL AND VOLUME CONTROL SYSTEM
NOMINAL EQUIPMENT DESIGN PARAMETERS

Demineralizers

Mixed Bed Demineralizer

Number	2
Design pressure (psig)	3,100
Design temperature (°F)	200
Design flow (gpm)	100
Resin volume (ft^3)	50
Material	SS
Resin type	Mixed Bed Li7OH Form

Cation Bed Demineralizer

Number	1
Design pressure (psig)	3,100
Design temperature (°F)	200
Design flow (gpm)	100
Resin volume (ft^3)	50
Material	SS
Resin type	Cation H+ Form

Table 9.3.6-2 (Sheet 3 of 3)

CHEMICAL AND VOLUME CONTROL SYSTEM
NOMINAL EQUIPMENT DESIGN PARAMETERS

Filter

Reactor Coolant Filter

Number	2
Type	Disposable Cartridge
Design pressure (psig)	3,100
Design temperature (°F)	200
Design flow (gpm)	100
Dp at design flow (psi)	10

Tank

Boric Acid Tank

Number	1
Volume (gal)	≥62,000
Type	Cylindrical
Design pressure (psig)	Atmospheric
Design temperature (°F)	200
Material	SS

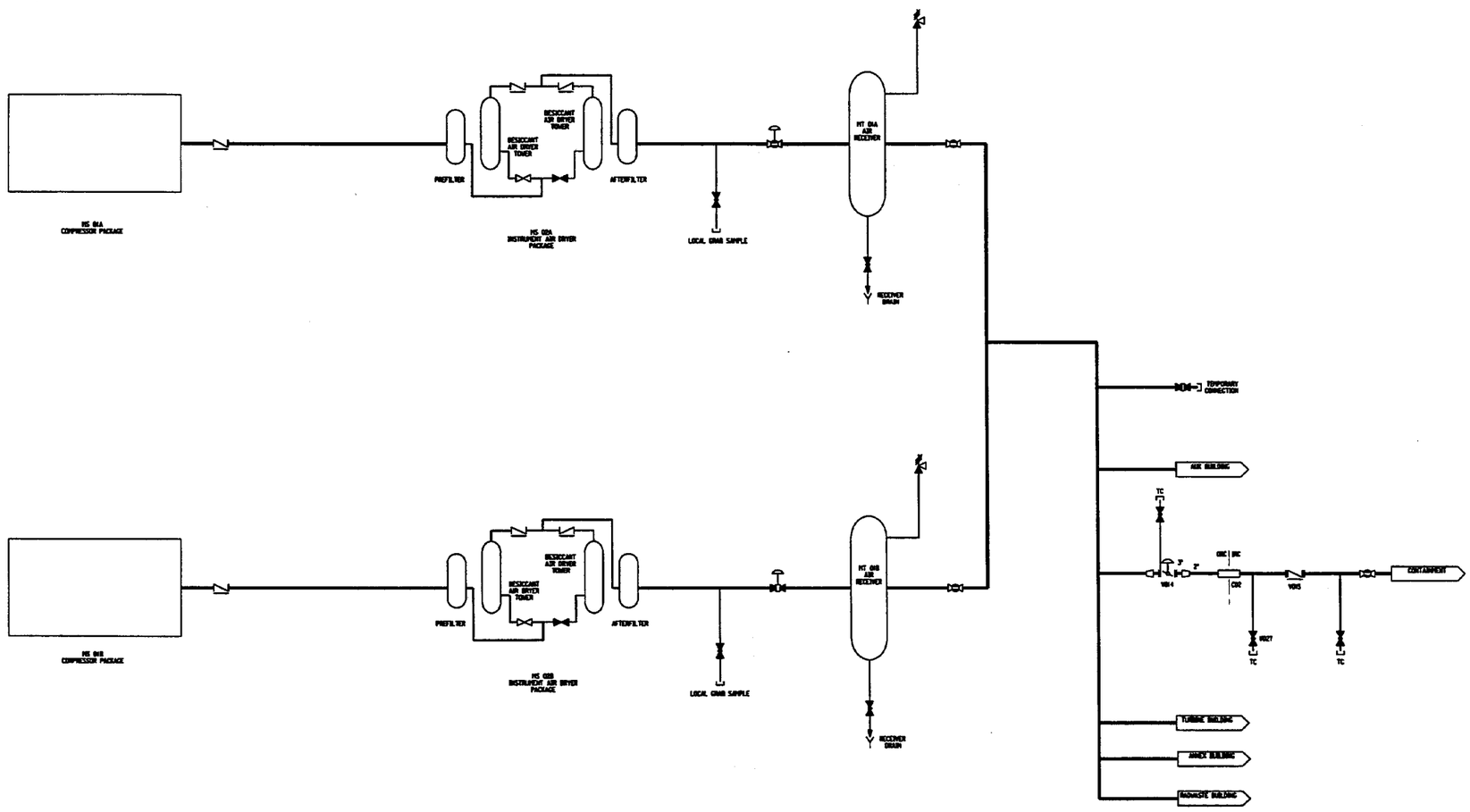

Figure 9.3.1-1 (Sheet 1 of 3)

Compressed & Instrument Air System
Piping and Instrumentation Diagram

(REF CAS 001 & 005)

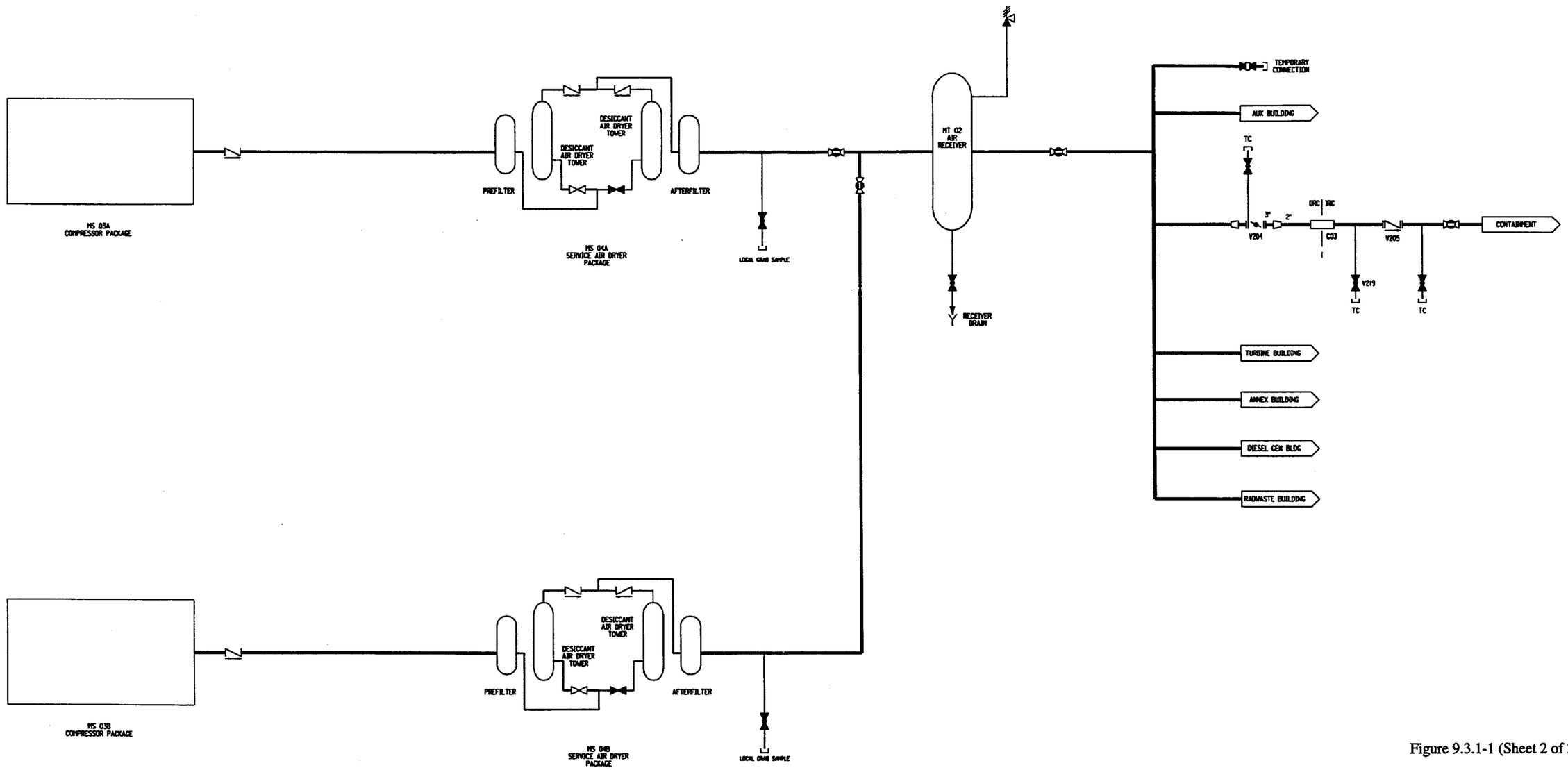

Figure 9.3.1-1 (Sheet 2 of 3)

Compressed & Instrument Air System Piping and Instrumentation Diagram

(REF CAS 008 & 012)

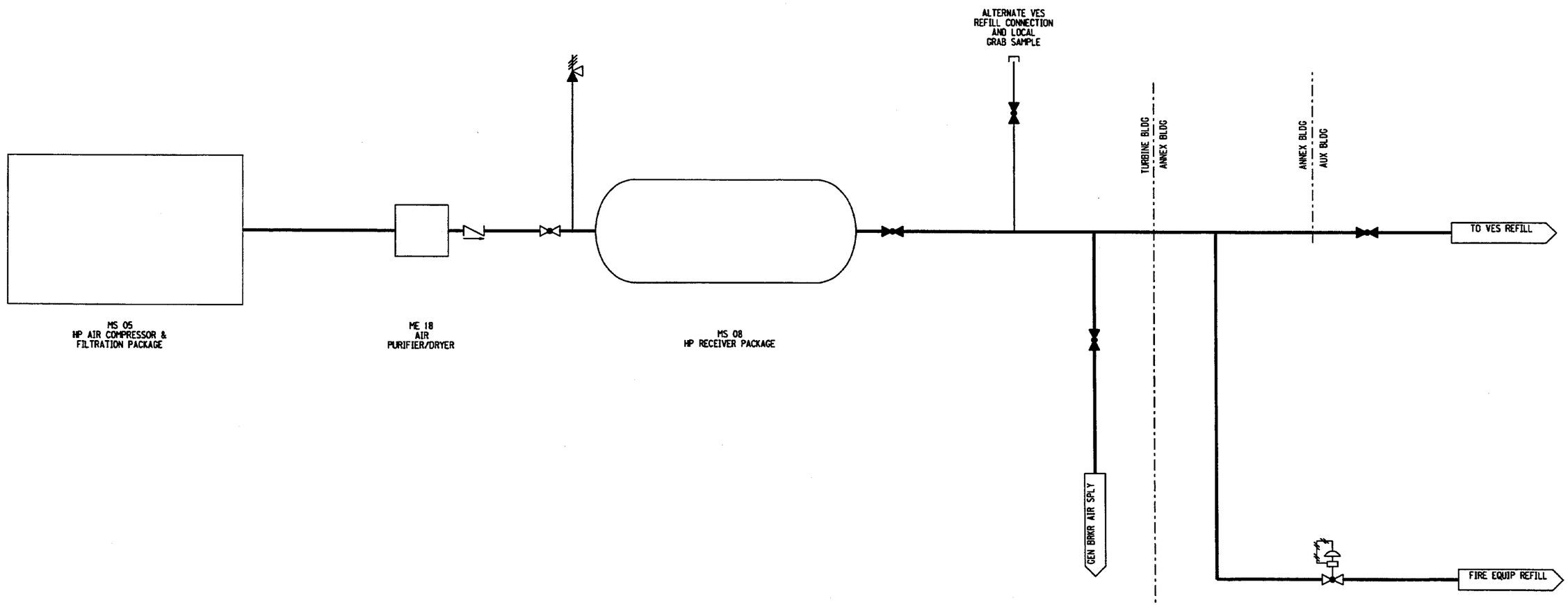

Figure 9.3.1-1 (Sheet 3 of 3)

Compressed & Instrument Air System
Piping and Instrumentation Diagram

(REF CAS 015)

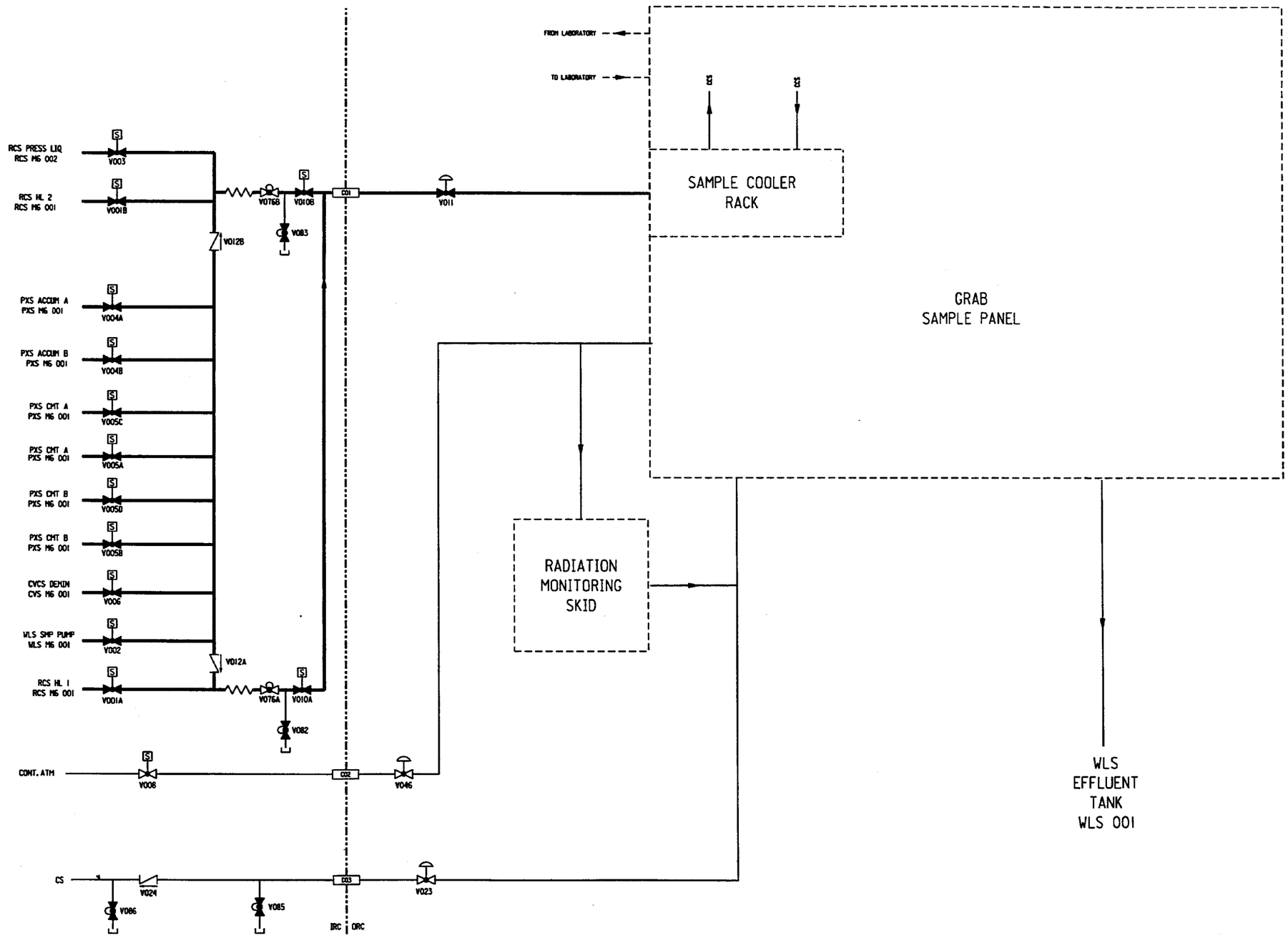

Figure 9.3.3-1

Simplified Sketch of the Primary Sampling System

(REF) PSS 001

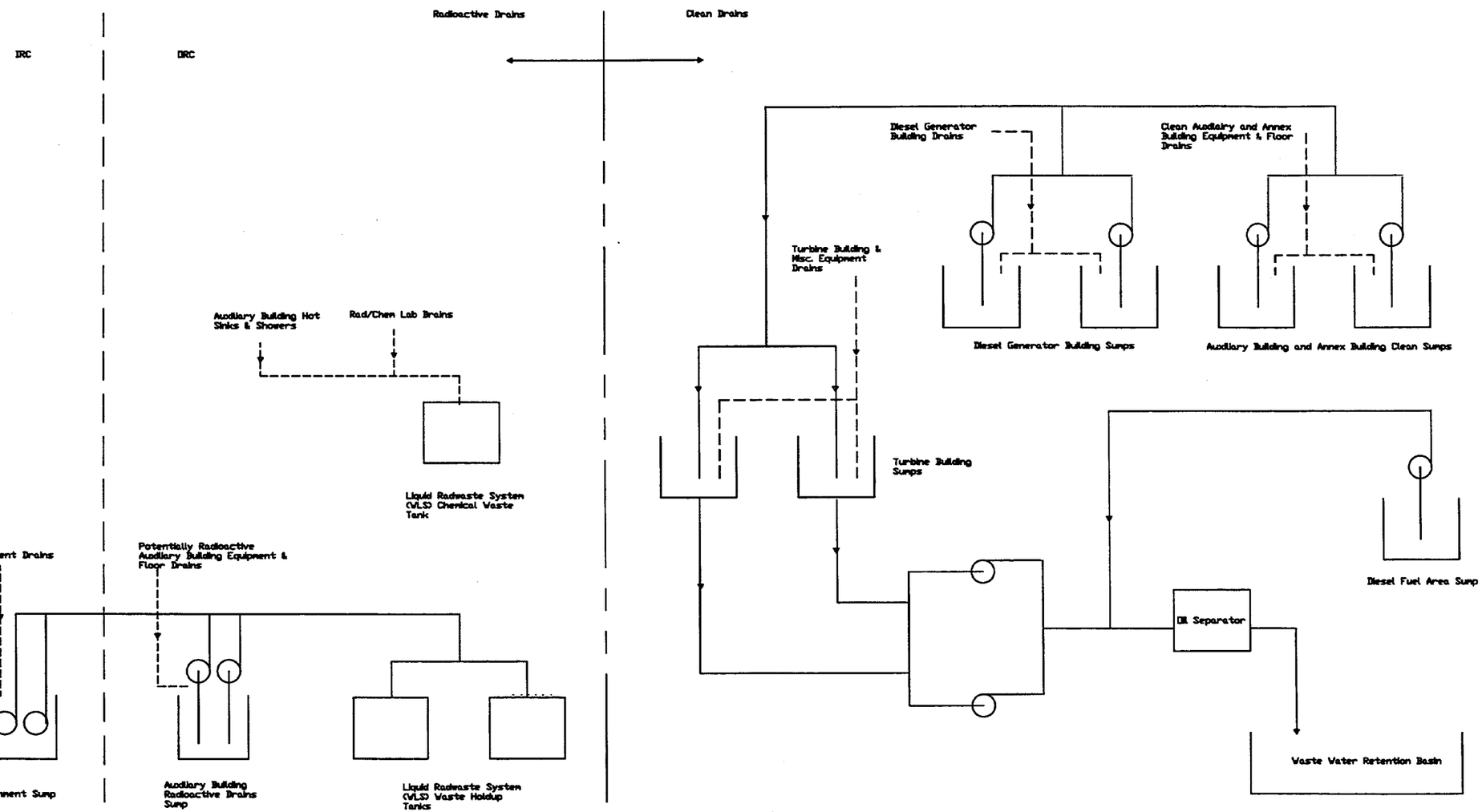

Figure 9.3.5-1

General Arrangement of Drainage Systems

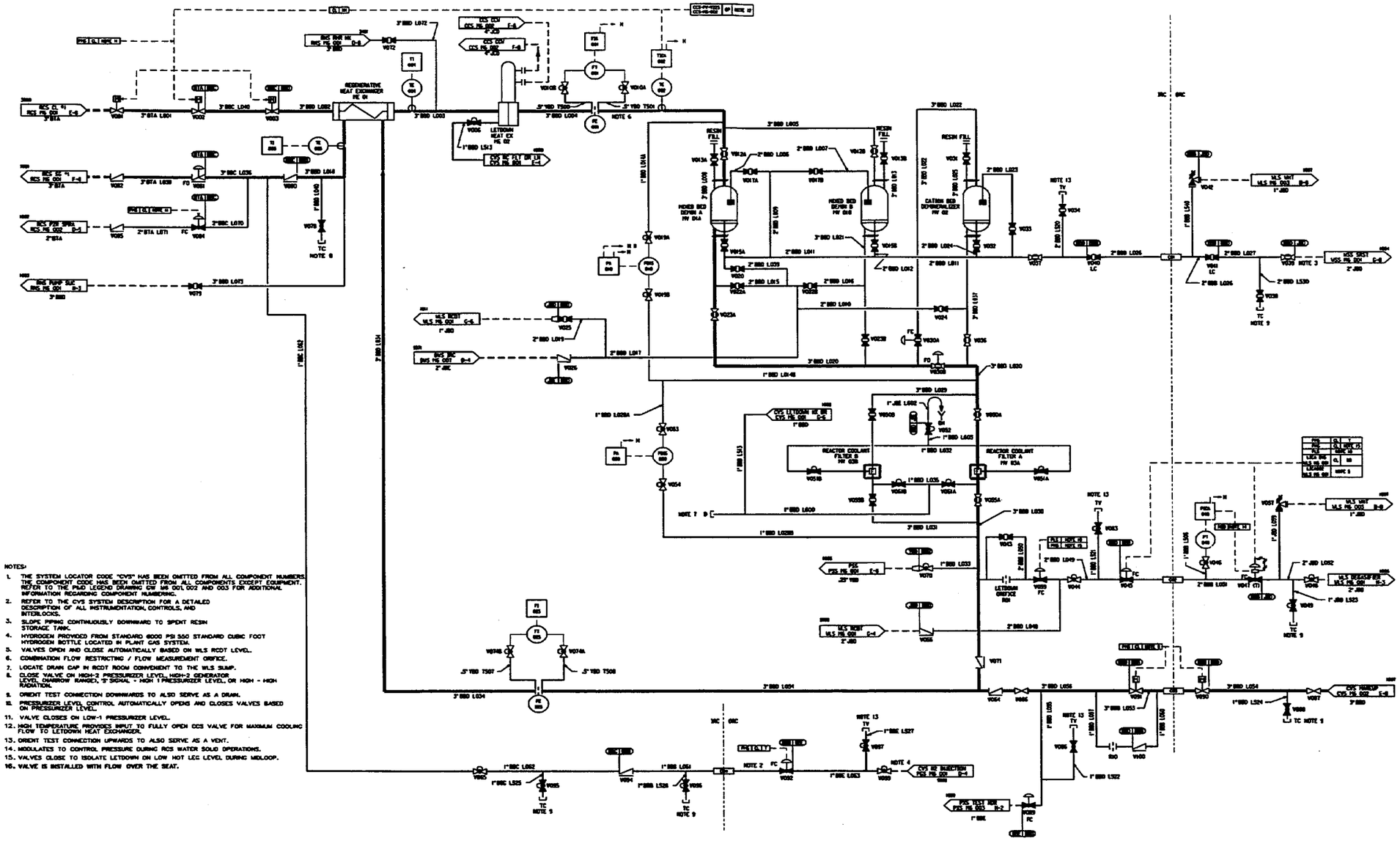

Figure 9.3.6-1 (Sheet 1 of 2)

Chemical and Volume Control System Piping and Instrumentation Diagram

(REF) CVS 001

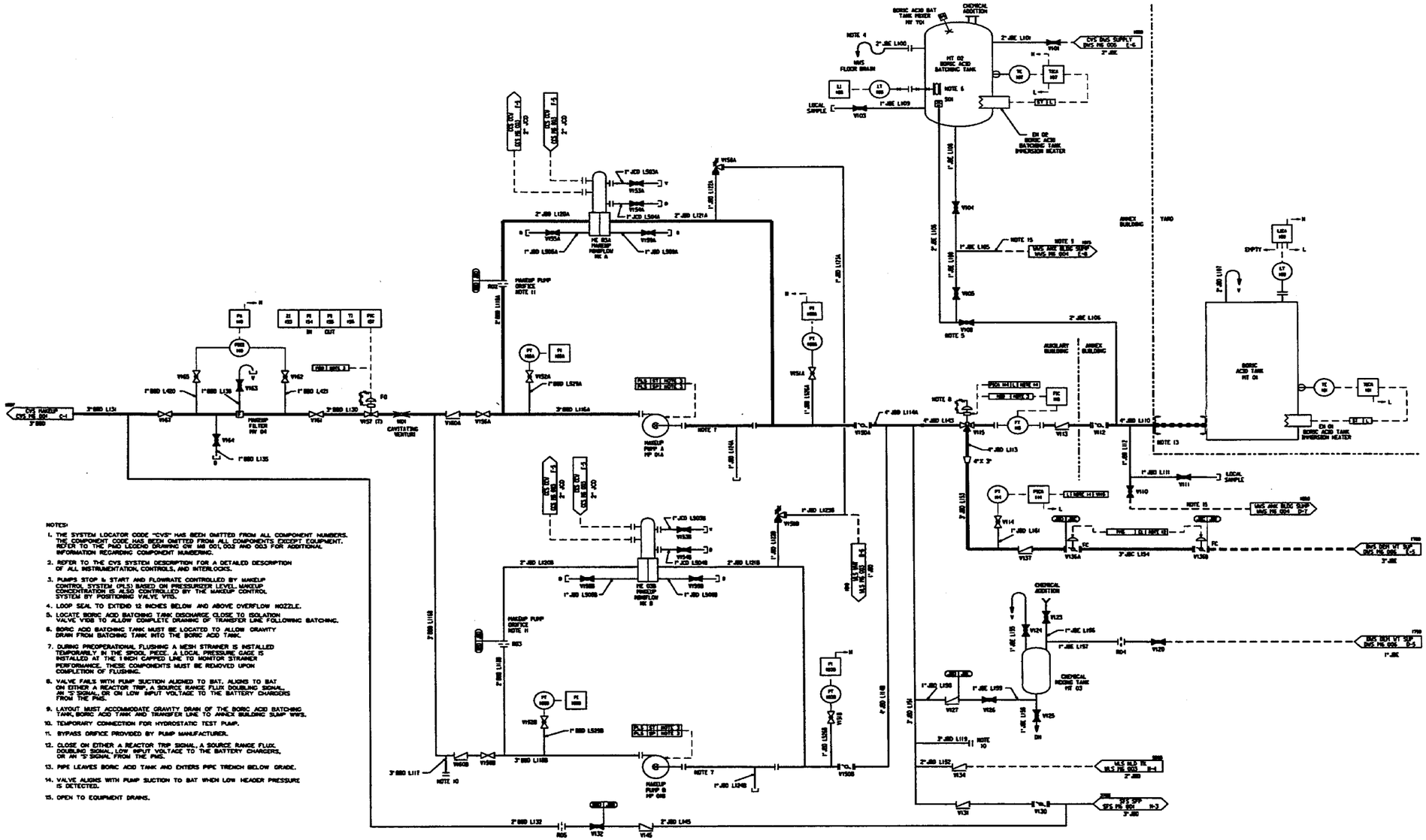

NOTES:

1. THE SYSTEM LOCATOR CODE "CVS" HAS BEEN OMITTED FROM ALL COMPONENT NUMBERS. THE COMPONENT CODE HAS BEEN OMITTED FROM ALL COMPONENTS EXCEPT EQUIPMENT. REFER TO THE P&ID LEGEND DRAWING CW M6 001, 002 AND 003 FOR ADDITIONAL INFORMATION REGARDING COMPONENT NUMBERING.
2. REFER TO THE CVS SYSTEM DESCRIPTION FOR A DETAILED DESCRIPTION OF ALL INSTRUMENTATION, CONTROLS, AND INTERLOCKS.
3. PUMPS STOP & START AND FLOWRATE CONTROLLED BY MAKEUP CONTROL SYSTEM (MCS) BASED ON PRESSURIZER LEVEL. MAKEUP CONCENTRATION IS ALSO CONTROLLED BY THE MAKEUP CONTROL SYSTEM BY POSITIONING VALVE V150.
4. LOOP SEAL TO EXTEND 12 INCHES BELOW AND ABOVE OVERFLOW NOZZLE.
5. LOCATE BORIC ACID BATCHING TANK DISCHARGE CLOSE TO ISOLATION VALVE V308 TO ALLOW COMPLETE DRAINING OF TRANSFER LINE FOLLOWING BATCHING.
6. BORIC ACID BATCHING TANK MUST BE LOCATED TO ALLOW GRAVITY DRAIN FROM BATCHING TANK INTO THE BORIC ACID TANK.
7. DURING PREOPERATIONAL FLUSHING A MESH STRAINER IS INSTALLED TEMPORARILY IN THE SPOOL PIECE. A LOCAL PRESSURE GAGE IS INSTALLED AT THE 1 INCH CAPPED LINE TO MONITOR STRAINER PERFORMANCE. THESE COMPONENTS MUST BE REMOVED UPON COMPLETION OF FLUSHING.
8. VALVE FAILS WITH PUMP SUCTION ALIGNED TO BAT. ALIGNS TO BAT ON EITHER A REACTOR TRIP, A SOURCE RANGE FLUX DOUBLING SIGNAL, AN "S" SIGNAL, OR ON LOW INPUT VOLTAGE TO THE BATTERY CHARGERS FROM THE PMS.
9. LAYOUT MUST ACCOMMODATE GRAVITY DRAIN OF THE BORIC ACID BATCHING TANK, BORIC ACID TANK AND TRANSFER LINE TO ANNEX BUILDING SUMP WWS.
10. TEMPORARY CONNECTION FOR HYDROSTATIC TEST PUMP.
11. BYPASS ORIFICE PROVIDED BY PUMP MANUFACTURER.
12. CLOSE ON EITHER A REACTOR TRIP SIGNAL, A SOURCE RANGE FLUX DOUBLING SIGNAL, LOW INPUT VOLTAGE TO THE BATTERY CHARGERS, OR AN "S" SIGNAL FROM THE PMS.
13. PIPE LEAVES BORIC ACID TANK AND ENTERS PIPE TRENCH BELOW GRADE.
14. VALVE ALIGNS WITH PUMP SUCTION TO BAT WHEN LOW HEADER PRESSURE IS DETECTED.
15. OPEN TO EQUIPMENT DRAINS.

Figure 9.3.6-1 (Sheet 2 of 2)

Chemical and Volume Control System
Piping and Instrumentation Diagram

(REF) CVS 002