HL-50036

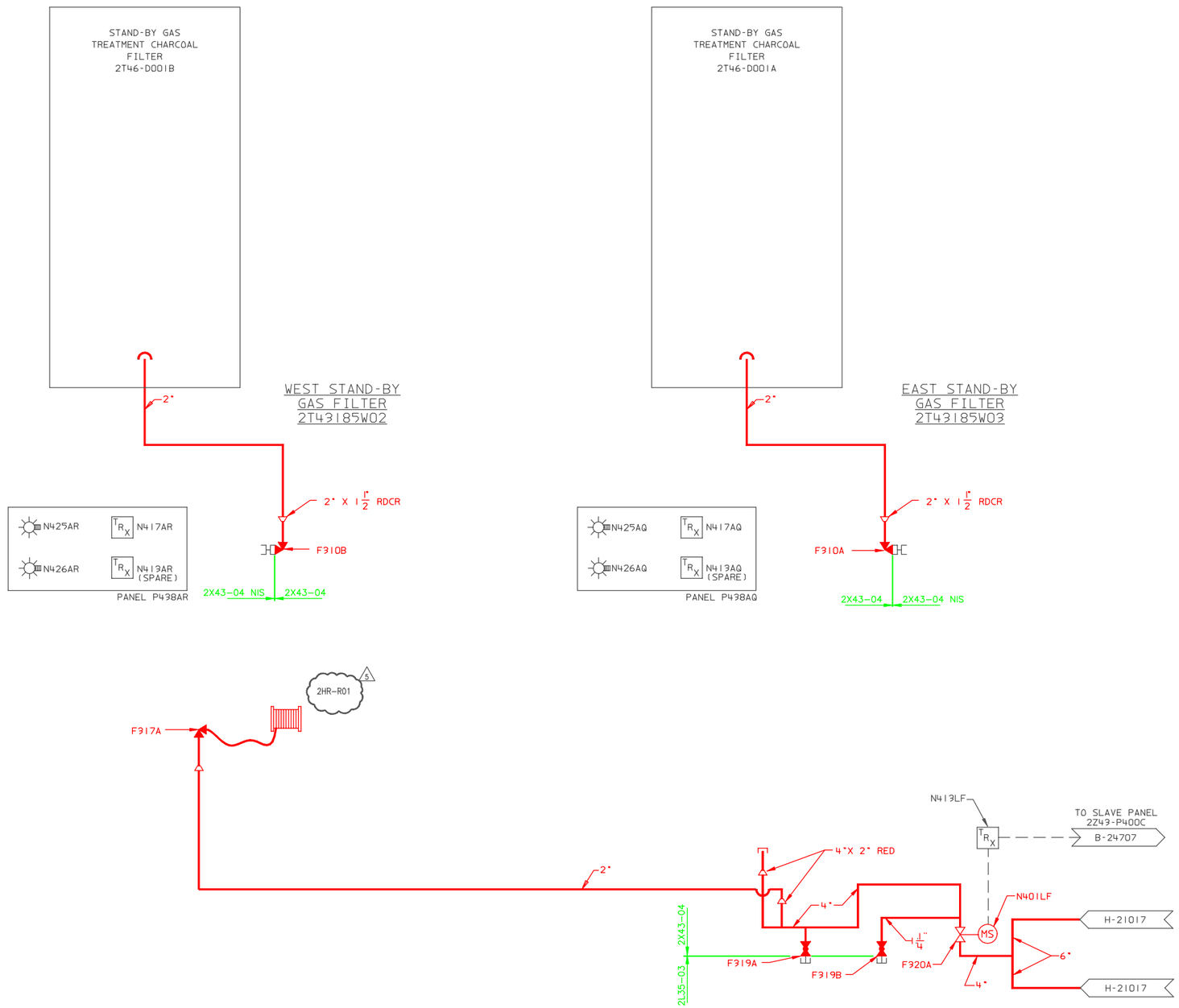

LEGEND:

- OS&Y VALVE (NO)
- GLOBE VALVE (NC)
- HOSE REEL
- CAP
- ANGLE VALVE WITH HOSE ADAPTER
- ANGLE VALVE
- REDUCER
- INDICATING LIGHT
- ADDRESSABLE INTERFACE MODULE
- MONITOR SWITCH

NOTES:

1. ALL PIPING SHOWN ON THIS DRAWING IS IN COMPLIANCE WITH PURCHASE ORDER PEHA-100.
2. ALL MPL NO.'S ON THIS DRAWING ARE TO BE PRECEDED BY 2T43 UNLESS OTHERWISE NOTED.

REFERENCES:

H-21204	UNIT 2 - INDEX-FIRE PROTECTION & DETECTION SYSTEMS
SX-14522	INSTRUCTION-FIRE PROTECTION SPRINKLER SYSTEM
S-50511	FIRE PROTECTION-SPRAY/SPRINKLER SYSTEM-4" SUPPLY TO UNIT2 STAND-BY GAS.
S-50080	FIRE PROTECTION-SPRAY/SPRINKLER SYSTEM-HVAC ROOM UNIT 2 PLAN AB.EL.164' & HANGERS.
S-50081	FIRE PROTECTION-SPRAY/SPRINKLER SYSTEM-
H-21017	REACTOR & RADWASTE BUILDING-FIRE PROTECTION SYSTEM-P&ID
H-21179	REACTOR BUILDING FIRE PROTECTION SYSTEM-SECTIONS
S-50266	FIRE PROTECTION-SPRINKLER SYSTEM-HANGERS FOR HVAC UNIT 2 & 8" SUPPLY HANGERS FOR UNIT 2.
B-24622	FIRE PROTECTION FCD. SYSTEM NO. 2T43185W02
B-24623	FIRE PROTECTION FCD. SYSTEM NO. 2T43185W03
B-24707	FIRE PROTECTION FCD. SYSTEM NO. 2T43158W05

BOUNDARY DIAGRAM NO.:2X43-B01-21

FUNCTION(S) NO.: 2X43-04

PREPARED BY: M D STEPHENS
DATE: 2/6/98
REVIEWED BY: ALEX MORRISON
DATE: 7/13/98

LICENSE RENEWAL DOCUMENT

MPL NO. 2T43 | ACAD14 | HL50036

SOUTHERN COMPANY

LICENSE RENEWAL SCREENING FOR INFORMATION ONLY

EDWIN I. HATCH NUCLEAR PLANT UNIT No.2
FIRE PROT – PIPING
P&ID – STANDBY GAS TRT FLTRS

Revision: A	Date: 10-22-99
APPROVED. ISSUED PER LICENSE RENEWAL BOUNDARY PACKAGES. DRAWING CREATED FROM H-50036, REV.5; BY TRM.	

BY	CHK'D	APPR'L
TRM	MDS	ASK

DRAWN	DESIGNED	LOCATION	DOCUMENT NUMBER	REVISION
TRM	LCF	10-502	HL-50036	A
DATE	SCALE			
	None			