HL-26372

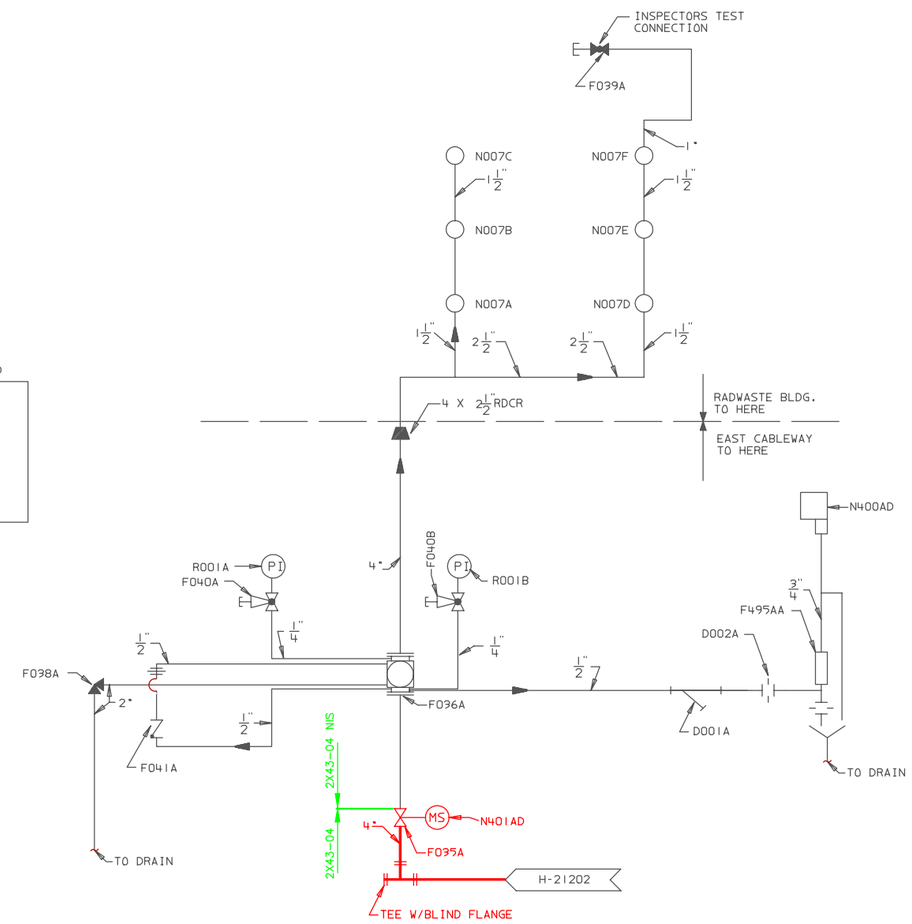

PANEL P438AD

N425AD — N412AD

N426AD — N413AD

SYSTEM NO. 2V43132W04
DRY WASTE STORAGE
FLR. EL. 132'-0"

LEGEND:

- ADDRESSABLE INTERFACE MODULE
- ALARM VALVE
- GLOBE VALVE(N.C.)
- CAP
- ANGLE VALVE(N.C.)
- CHECK VALVE
- RETARD CHAMBER
- UNION
- MONITOR SWITCH
- PRESSURE INDICATOR
- SIDE OUTLET GLOBE VALVE (N.O.)
- GATE VALVE (N.O.)
- STRAINER
- DRIP FUNNEL
- FLOW DIRECTION
- PRESSURE SWITCH
- RESTRICTING ORIFICE
- UPRIGHT SPRINKLER HEAD
- INDICATING LIGHT
- REDUCER

NOTES:

1. ALL MPL NO.'S TO BE PREFIXED BY 2V43 UNLESS OTHERWISE NOTED.

REFERENCES:

H-26373	FIRE PROT-PIPING-RAD WASTE BLDG-EL 132'-6"
H-26376	FIRE PROT-PIPING-ISOMETRIC-RAD WASTE BLDG-EL 132'-6"
BM-50032 SH.1 & 2	FIRE PROT-PIPING-RAD WASTE BLDG-DRY WASTE SYS BM
S-60012	UNIT 2 EAST CABLEWAY SPRINKLER SYSTEM
H-26375	RFP OIL CONDITIONER
H-21176	TURBINE BLDG FIRE PROT-SYS PLAN
H-21016	TURBINE BLDG SYS P&ID
H-21202 SH. 5	TURBINE BLDG FIRE PROT P&ID
B-24662	FIRE PROT-FCD 2V43132W04

LICENSE RENEWAL DOCUMENT

BOUNDARY DIAGRAM NO.:2X43-B01-05

FUNCTION(S) NO.: 2X43-04

PREPARED BY: M D STEPHENS
DATE: 2/6/98
REVIEWED BY: ALEX MORRISON
DATE: 7/13/98

Revision: A | Date: 11-03-99

APPROVED. ISSUED PER LICENSE RENEWAL BOUNDARY PACKAGES. DRAWING CREATED FROM H-26372 SH.1, REV.5; BY TRM.

BY	CHK'D	APPR'D
TRM	MDS	ASK

MPL NO. 2V43 | ACAD14 | HL26372

SOUTHERN COMPANY

LICENSE RENEWAL SCREENING FOR INFORMATION ONLY

EDWIN I. HATCH NUCLEAR PLANT UNIT No.2
FIRE PROTECTION PIPING
RADWASTE BLDG DRYWASTE
STORAGE AREA SPRINKLER SYS P&ID

DRAWN	DESIGNED	LOCATION	DOCUMENT NUMBER	REVISION
TRM	LCF	10-502	HL-26372	A
DATE	SCALE			
	None			