HL-26058

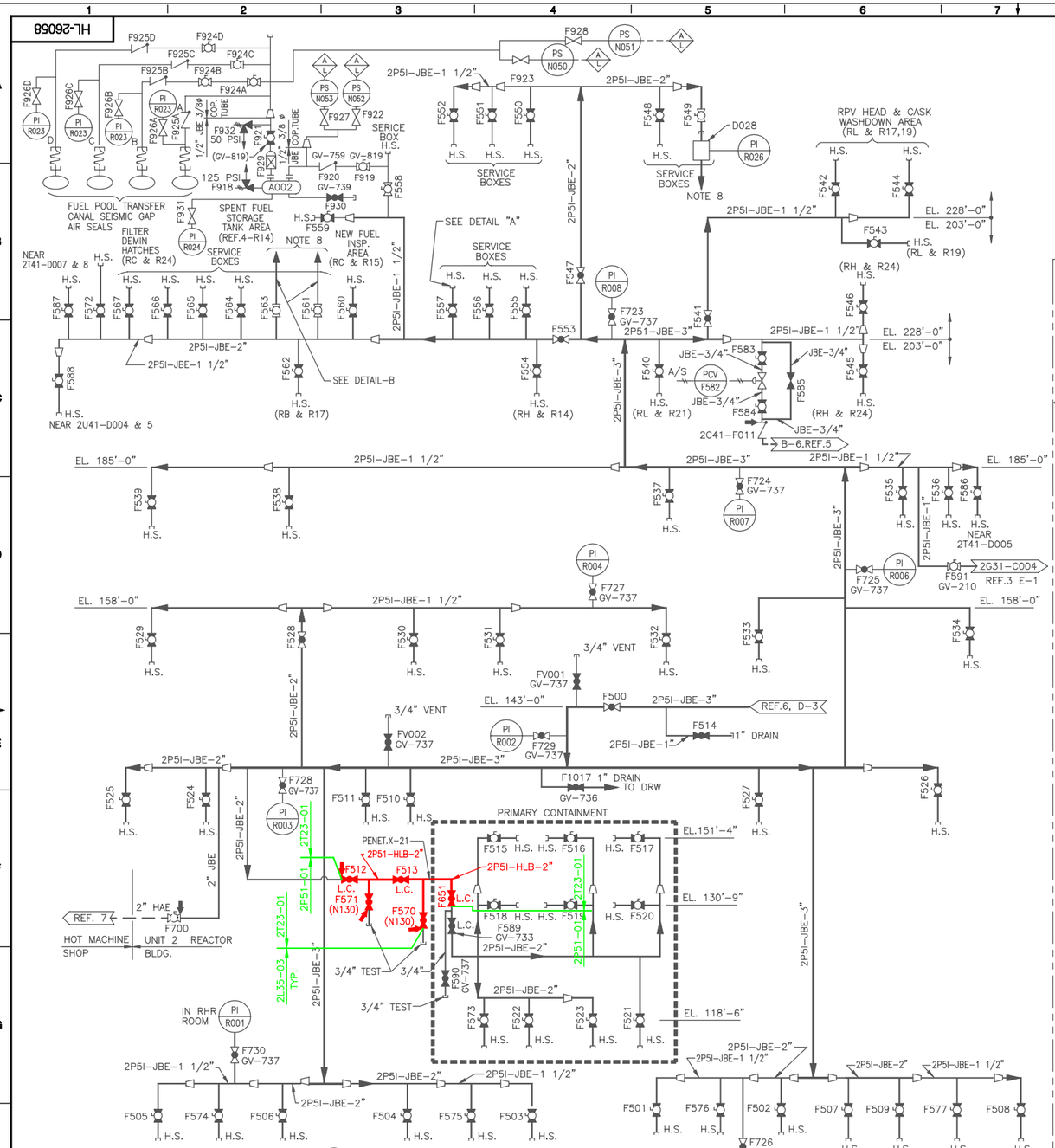

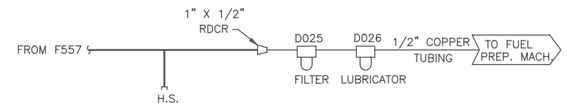

DETAIL "A"
(ZONE B-3)

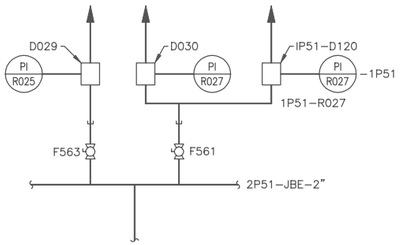

DETAIL – B

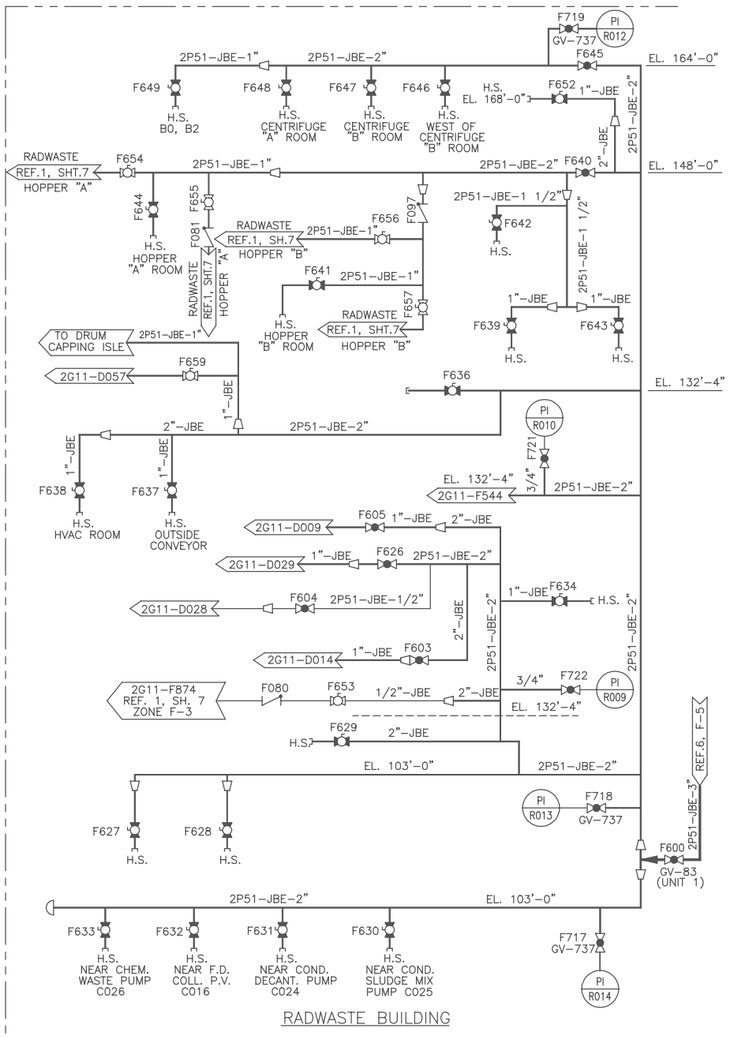

RADWASTE BUILDING

NOTES

1. ALL ITEM NO.'S TO BE PREFIX BY 2P51 TO COMPLETE MPL LISTING UNLESS SHOWN OTHERWISE.
2. ALL BRANCH LINES AND HOSE STATIONS (H.S.) ARE 2P51–JBE–1" UNLESS SHOWN OTHERWISE.
3. ALL BALL VALVES IN THIS SYSTEM ARE SOFT SEATED.
4. SET F033 AT 20 PSIG AND PC–N001 AT 18 PSIG AT 0 TO 450 SCFM
5. ✳ FURNISHED WITH THE EQUIPMENT.
6. ANY ADDITIONAL HIGH POINT VENTS AND LOW POINT DRAINS TO BE ADDED BY FIELD AS REQUIRED.
7. VALVES ON THIS DWG. ARE NUMBERED FD001 THRU FD020 FOR DRAIN VALVES FV001 THRU FV020 FOR VENT VALVES.
8. VALVE F549 SUPPLIES AIR TO THE UNIT 2 FUEL POOL/ REACTOR CAVITY OUTER GATE SEAL. VALVE F563 SUPPLIES AIR TO THE UNIT 2 FUEL POOL/ REACTOR CAVITY INNER GATE SEAL. VALVE F561 SUPPLIES AIR TO THE UNIT 1 FUEL POOL/ TRANSFER CANAL OUTER GATE SEAL AND THE UNIT 2 CASK STORAGE/TRANSFER CANAL OUTER GATE SEAL.

REFERENCES

REFERENCES	MPL. ITEM NO.	S.S. DWG NO.
1. P&ID RADWASTE SYS.	2G11–1010	H–26026–32
2. P&ID FUEL POOL F/D. SYS.	2G41–1020	H–26039 & 40
3. REACTOR WTR CLEAN–UP SYS.	2G31–1010	H–26036 & 37
4. P&ID NITROGEN INERTING SYS.	2T48–1010	H–26083
5. P&ID STANDBY LIQUID CONTROL SYSTEM.	2G41–1010	H–26009
6. TURBINE BUILDING SERVICE AIR P&ID SHEET 2.	2P51–1010	H–21029
7. HOT MACHINE SHOP SUPPORT SYSTEM P&ID.		H–26053
8. RADWASTE SOLIDIFICATION SYSTEM P&ID.	2G12–1010	H–26033

LVN–FD002
LVN–FV002
LVN–RB–590
LVN–RW–659

LICENSE RENEWAL DOCUMENT

MPL. NO. 2P51-1020 | ACAD14 | HL26058

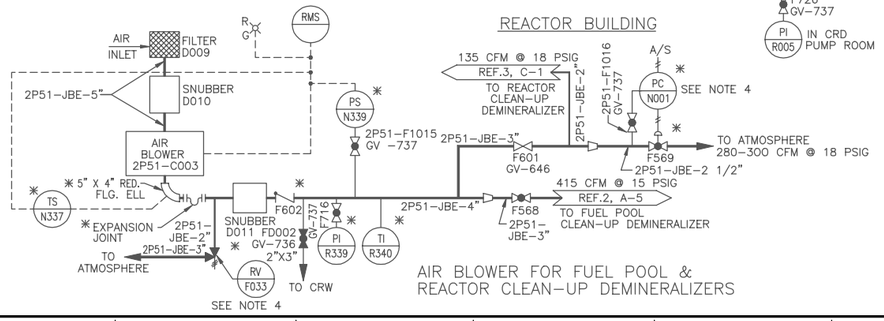

AIR BLOWER FOR FUEL POOL & REACTOR CLEAN–UP DEMINERALIZERS

BOUNDARY DIAGRAM NO.:2T23–B01–14

FUNCTION(S) NO.: 2T23–01

PREPARED BY: FAROOK CHANDIWALA
DATE: 10–20–98
REVIEWED BY: LARRY ORR
DATE: 12–09–98

Revision: A	Date: 1–4–2000

APPROVED. ISSUED PER LICENSE RENEWAL BOUNDARY PACKAGES. DRAWING CREATED FROM H–26058, REV. 24; BY ECB

BY	CHK'D	APPR
ECB	RLM	ASK

SOUTHERN COMPANY

LICENSE RENEWAL SCREENING FOR INFORMATION ONLY

EDWIN I. HATCH NUCLEAR PLANT UNIT No. 2
REACTOR & RADWASTE BUILDING
SERVICE AIR SYSTEM P.&I.D.

DRAWN	DESIGNED	LOCATION	DOCUMENT NUMBER	REVISION
ECB	LCF	10-502	HL-26058	A
DATE	SCALE: None			