HL-26053

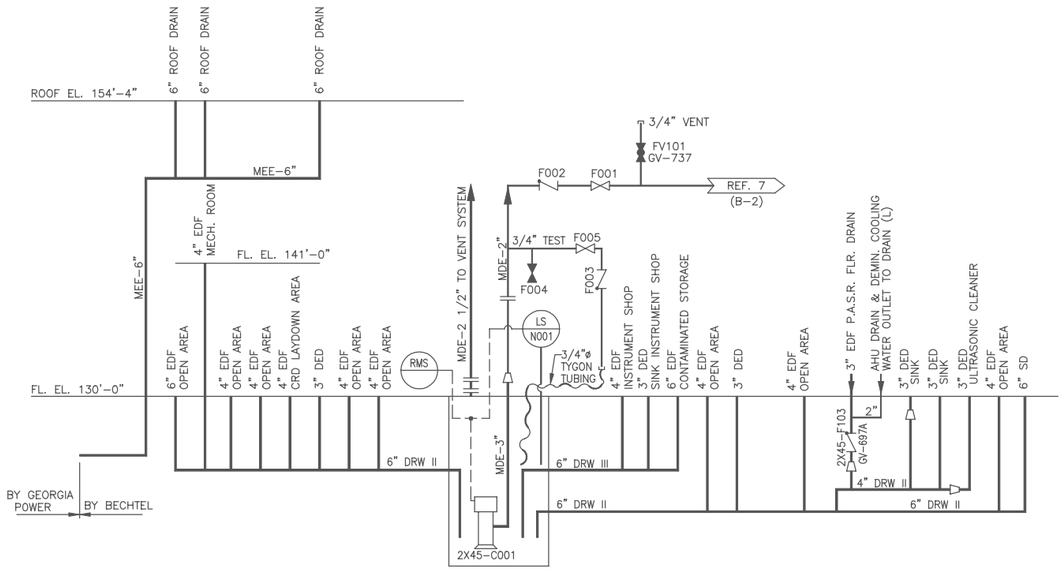

HOT MACHINE SHOP ROOF, FLOOR & EQUIPMENT DRAINS SUMP & PUMP

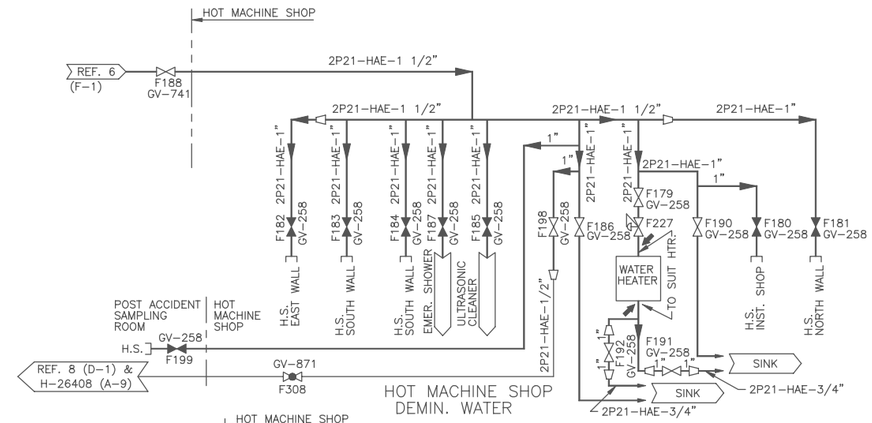

HOT MACHINE SHOP DEMIN. WATER

MR / HR RADIATION ZONE			
ZONE	D.DOSE RATE*	GENERAL LOCATION	OCCUPANCY GUIDE ONLY
I	≤ 0.5	OFFICE LABS, MACH. SHOP	UNLIMITED
II	≤ 2.5	PASSAGE & CONTROL PANELS	40 HRS/WK
III	≤15.0	SHORT TIME ACCESS AREA	6 HRS/WK
IV	≤100.0	LIMITED ACCESS AREA	1 HR/WK
V	>100.0	RESTRICTED ACCESS AREA	"X" MIN/WK

LEGEND

- TRX – ADDRESSABLE INTERFACE MODULE
- EDF – EQUIPMENT DRAIN IN FLOOR
- DRW – DIRTY RADIOACTIVE WASTE
- DED – DIRTY EQUIPMENT DRAIN
- CC – COOLING COIL
- HC – HEATING COIL
- ✳ – SUPPLIED BY EQUIPMENT VENDOR
- MS – MONITOR SWITCH

NOTES:

1. ALL DRAINAGE EQUIPMENT AND VALVE NO'S. TO BE PREFIXED BY MPL 2X45 UNLESS OTHERWISE NOTED.
2. ALL VENTILATION EQUIPMENT TO BE PREFIXED BY MPL 2X41 UNLESS OTHERWISE NOTED.
3. ALL SERVICE WATER EQUIPMENT AND VALVE NO'S. TO BE PREFIXED BY MPL 2P41 UNLESS OTHERWISE NOTED.
4. ALL DEMIN. WATER EQUIPMENT AND VALVE NO'S. TO BE PREFIXED BY MPL 2P21 UNLESS OTHERWISE NOTED.
5. ALL SERVICE AIR EQUIPMENT AND VALVE NO'S. TO BE PREFIXED BY MPL 2P51 UNLESS OTHERWISE NOTED.
6. ALL FIRE PROTECTION EQUIPMENT AND VALVE NO'S. TO BE PREFIXED BY MPL 2X43 UNLESS OTHERWISE NOTED.
7. A BLANK IS INSTALLED IN THE DISCHARGE SIDE OF FAN 2X41-C001. FAN IS DISABLED.

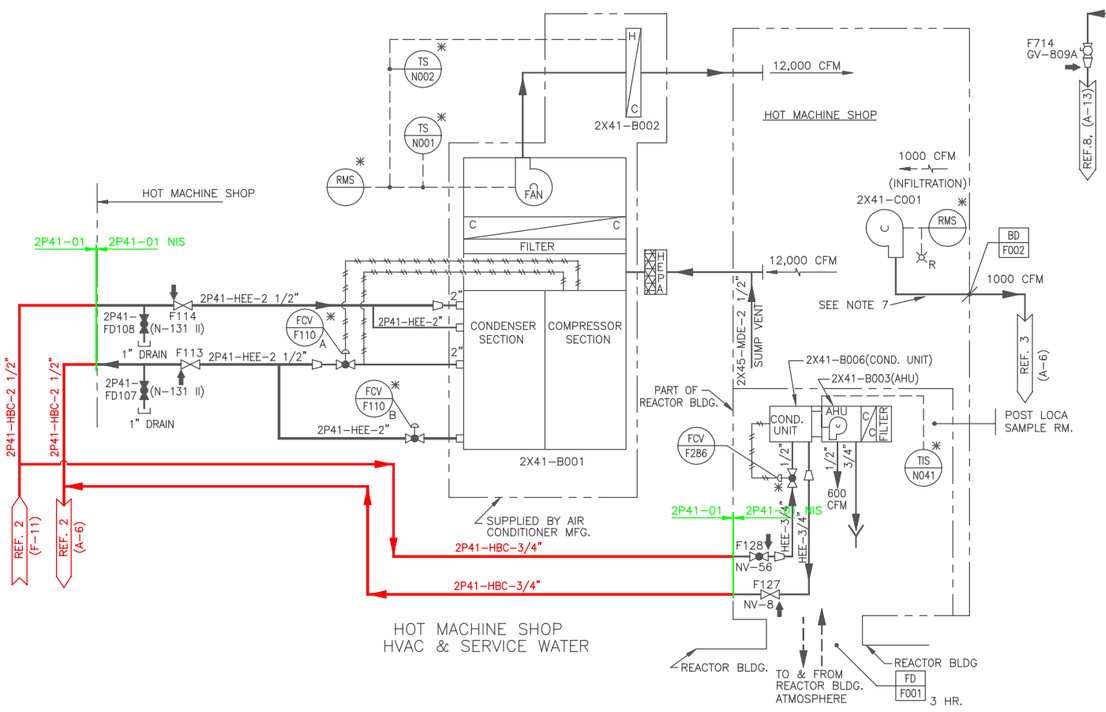

HOT MACHINE SHOP HVAC & SERVICE WATER

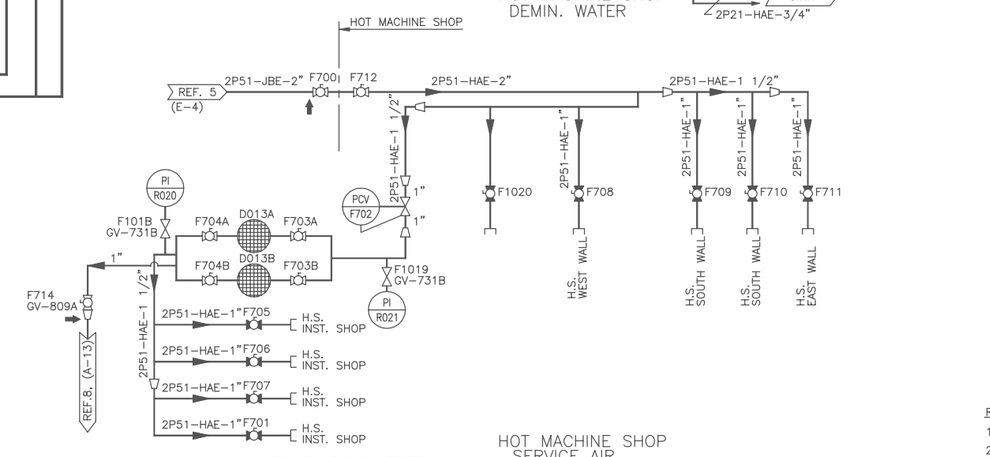

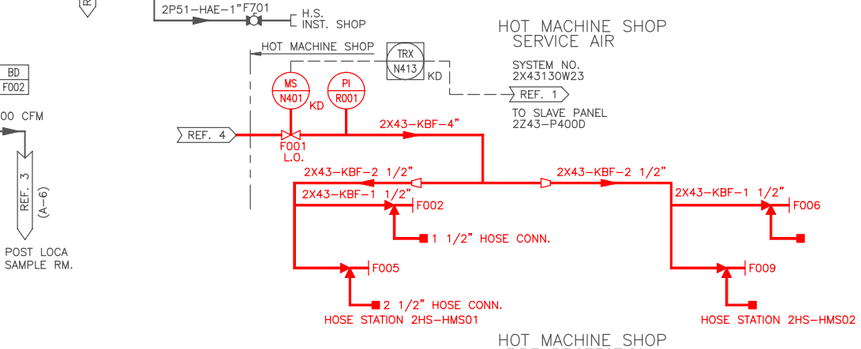

HOT MACHINE SHOP SERVICE AIR

HOT MACHINE SHOP FIRE PROTECTION

REFERENCE:

REFERENCE	MPL. NO.	DWG. NO.
1. FIRE PROTECTION FCD	2X43130 W23	B-24717
2. REACTOR BUILDING SERVICE WATER SYS. P&ID	2P41-1010	H-26050
3. REACTOR BUILDING VENT. SYS. P&ID	T41-1020	H-16005
4. FIRE PROTECTION P&ID PUMPHOUSE & YARD MAINS	———	H-11033
5. REACTOR & RADWASTE BLDG. SERVICE AIR SYS. DIAGRAM	2P51-1020	H-26058
6. REACTOR BUILDING DEMINERALIZED WATER SYS. P&ID	2P21-1010	H-26047
7. RADWASTE SYS. P&ID SH. NO. 3	2G11-1010	H-26028
8. POST ACCIDENT SAMPLING SYSTEM P&ID	2P33-1010	H-28135
9. HOT MACHINE SHOP FLOOR & ROOF DRAINS	2X45-1010	H-26214

LICENSE RENEWAL DOCUMENT

MPL NO. 2X45-1010 MPL NO. 2P21-1010
MPL NO. 2X41-1010 MPL NO. 2P51-1010
MPL NO. 2P41-1010 MPL NO. 2X43-1010

BOUNDARY DIAGRAM NO.:2P41-B01-08
FUNCTION(S) NO.: 2P41-01
PREPARED BY: R. L. MYERS
DATE: 12/2/99
REVIEWED BY: ALEX MORRISON
DATE: 12/2/99

BOUNDARY DIAGRAM NO.: 2X43-B01-23
FUNCTION(S) NO.: 2X43-04
PREPARED BY: M D STEPHENS
DATE: 2/6/98
REVIEWED BY: ALEX MORRISON
DATE: 7/13/98

Revision: A	Date: 11-08-99
APPROVED. ISSUED PER LICENSE RENEWAL BOUNDARY PACKAGES. DRAWING CREATED FROM H-26053, REV.18; BY TRM.	

BY	CHK'D	APPR
TRM	MDS	ASK

ACAD14 HL26053

SOUTHERN COMPANY

LICENSE RENEWAL SCREENING FOR INFORMATION ONLY

EDWIN I. HATCH NUCLEAR PLANT UNIT No.2
HOT MACHINE SHOP
SUPPORT SYSTEM P&ID

DRAWN	DESIGNED	LOCATION	DOCUMENT NUMBER	REVISION
TRM	LCF	10-502	HL-26053	A
DATE	SCALE None			