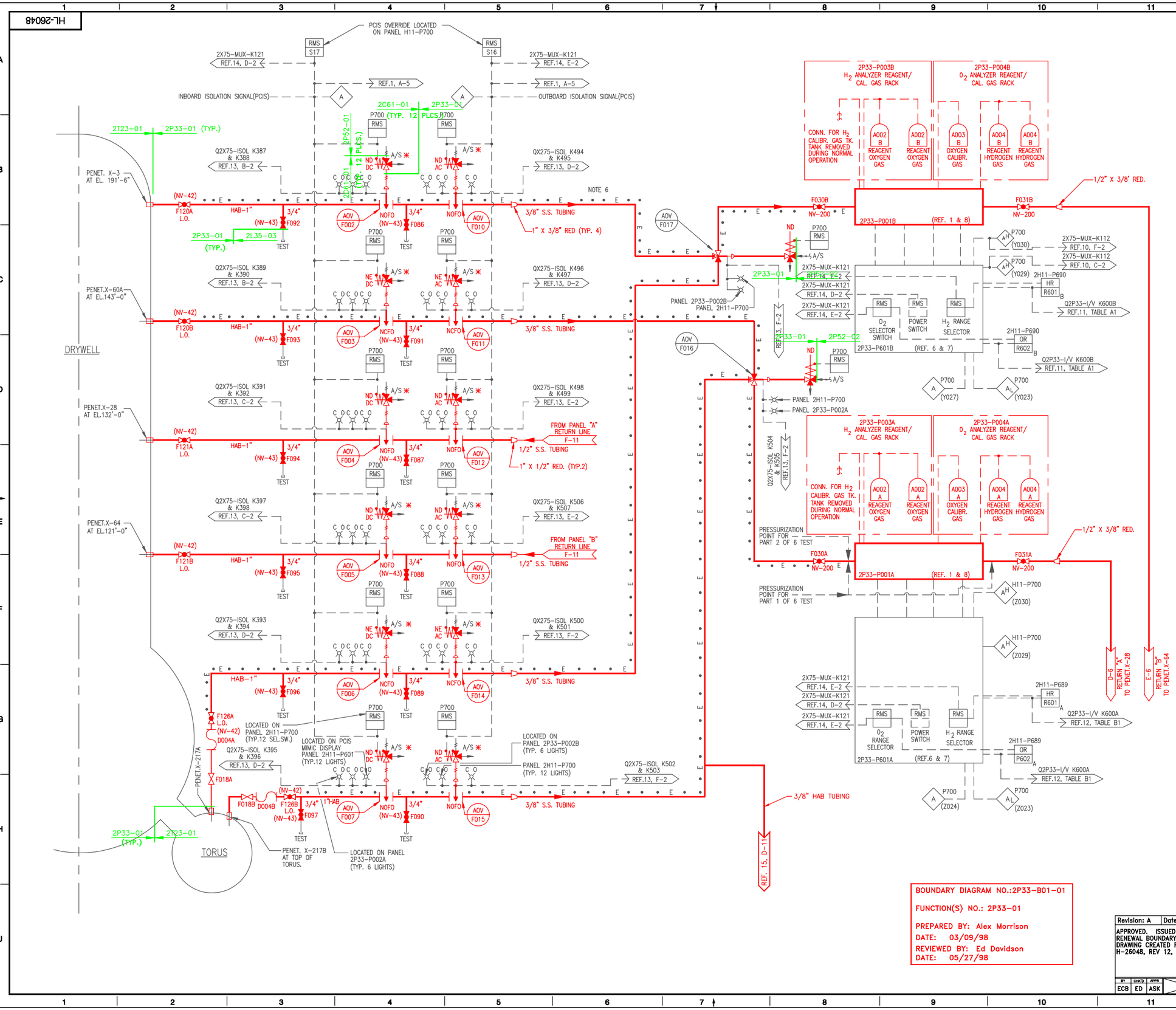

NOTES

1. ALL EQUIPMENT & INSTRUMENT NUMBERS ARE TO BE PRECEDED BY MPL. 2P33 UNLESS OTHERWISE NOTED. EXAMPLE: 2P33-P001A.
2. FOR INTERNAL DETAILS OF VENDOR-SUPPLIED PANELS 2P33-P001A & B SEE REFERENCE 1.
3. FOR INTERNAL DETAILS OF VENDOR-SUPPLIED PANELS 2P233-P601A & B SEE REFERENCE 6.
4. ROUTING OF THESE GAS SAMPLE LINES IS AS SHOWN ON REFERENCES 2, 3, 4, & 5.
5. *-FIELD SUPPLIED INSTRUMENTS AND VALVES.
6. ••E•• DENOTES THAT THE PIPE OR TUBING IS ELECTRICALLY HEAT TRACED.
7. DIGITAL SIGNALS: "ANALYZER IN HIGH OR LOW RANGE", DRY CONTACT INPUT TO RECORDER, RECORDER TO SUPPLY 0-100 mV SOURCE.
8. FOR THE VALVES LISTED BELOW USE NV-15
   2P33-F018A
   2P33-F018B

REFERENCES:

	REFERENCE	MPL. NO.	S.S. NO.
1.	H_2O_2 ANALYZER SYSTEM P&ID FOR PANEL NOS. P33-P001A & B	2P33-1010	H-26049
2.	SAMPLE LINE ROUTINGS REACTOR BLDG. BELOW EL. 130'-0"		H-26392
3.	SAMPLE LINE ROUTINGS REACTOR BLDG. EL. 130'-0" & RADWASTE BLDG. EL. 132'-4"		H-26394
4.	SAMPLE LINE ROUTINGS REACTOR BLDG. EL. 158'-0" & RADWASTE BLDG. EL. 164'-0"		H-26396
5.	SAMPLE LINE ROUTINGS REACTOR BLDG. EL. 185'-0"		H-26397
6.	DELPHI INDUSTRIES REMOTE CONTROL PANEL LAYOUT DRAWING	2P33-P601A,B	S-41884
7.	ARRANGEMENT & EQUIPMENT FOR LOCAL PANELS P33-P002A&B & MAIN CONTROL ROOM PANELS P33-P600A&B		H-16166
8.	ARRANGEMENT & EQUIPMENT FOR LOCAL PANELS 2P33-P002A, B & MCR PANELS 2H11-P689 & 2H11-P690		H-26402
9.	K-IV PANEL LAYOUT	2P33-P001A,B	S-41885
10.	ANNUNCIATOR SIGNALS TO TSC I.E.D.	2X75-1010	H-26159
11.	CLASS IE DIVISION 1 ANALOG SIGNAL CONVERSION/ISOLATION SYSTEM I.E.D.	2X75-1010	H-26285
12.	CLASS IE DIVISION 2 ANALOG SIGNAL CONVERSION ISOLATION SYSTEM I.E.D.	2X75-1010	H-26286
13.	DIGITAL INPUT SIGNALS TO THE ERF COMPUTER SYSTEM SHT. 7 OF 15	2X75-1010	H-26176
14.	DIGITAL INPUT SIGNAL TO THE ERF COMPUTER SYSTEM SHT. 15 OF 15	2X75-1010	H-26295
15.	FISSION PRODUCTS MONITORING SYSTEM P&ID		H-26016

BOUNDARY DIAGRAM NO.:2P33-B01-01

FUNCTION(S) NO.: 2P33-01

PREPARED BY: Alex Morrison
DATE: 03/09/98
REVIEWED BY: Ed Davidson
DATE: 05/27/98

LICENSE RENEWAL DOCUMENT

MPL NO. 2P33-1010 | ACAD14 | HL26048

SOUTHERN COMPANY

LICENSE RENEWAL SCREENING FOR INFORMATION ONLY

EDWIN I. HATCH NUCLEAR PLANT UNIT No.2
PRIMARY CONTAINMENT ATMOSPHERE
H_2 & O_2 ANALYZER SYSTEM P. & I.D. SH. 1

Revision: A	Date: 1-5-2000

APPROVED. ISSUED PER LICENSE RENEWAL BOUNDARY PACKAGES. DRAWING CREATED FROM H-26048, REV 12, BY ECB.

BY	CHK'D	APPR.
ECB	ED	ASK

DRAWN	DESIGNED	LOCATION	DOCUMENT NUMBER	REVISION
BKN	LCF	10-502	HL-26048	A
DATE	SCALE None			