HL-26020

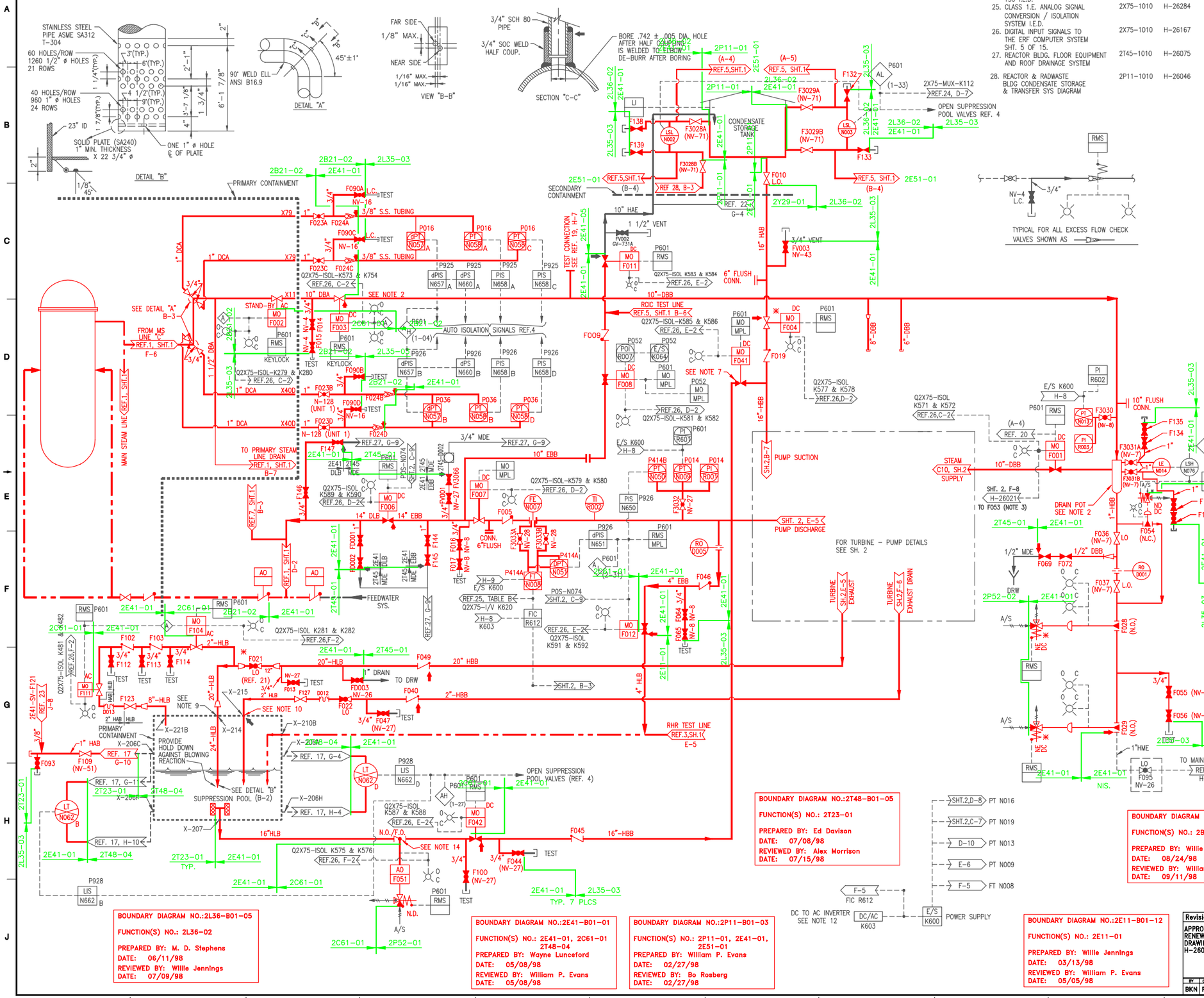

REFERENCES (CONT.)

24. ANNUNCIATOR SIGNALS TO TSC I.E.D.	2X75-1010	H-26159
25. CLASS 1.E. ANALOG SIGNAL CONVERSION / ISOLATION SYSTEM I.E.D.	2X75-1010	H-26284
26. DIGITAL INPUT SIGNALS TO THE ERF COMPUTER SYSTEM SHT. 5 OF 15.	2X75-1010	H-26167
27. REACTOR BLDG. FLOOR EQUIPMENT AND ROOF DRAINAGE SYSTEM	2T45-1010	H-26075
28. REACTOR & RADWASTE BLDG CONDENSATE STORAGE & TRANSFER SYS DIAGRAM	2P11-1010	H-26046

NOTES:

1. EQUIPMENT & INSTRUMENTS ARE PREFIXED BY MPL NO. 2E41 UNLESS OTHERWISE NOTED.
2. LINE TO SLOPE DOWN FROM POINT OF CONNECTION TO MAIN STEAM LINE TO THE DRAIN POT AHEAD OF THE TURBINE WITH NO POCKETS. LOCATE DRAIN POT AND VALVE F001 AS CLOSE AS POSSIBLE TO TURBINE INLET WITH VALVE VERTICAL.
3. VALVE F053 IS NORMALLY CLOSED. IF F053 IS OPENED, AN AUTO CLOSE SIGNAL IS SENT TO VALVE F053 WHEN VALVE F001 STARTS TO OPEN.
4. INSTRUMENT LINE VALVING MUST COMPLY WITH REF. 11.
5. CHEMICAL CLEANING CONNECTIONS, VALVES, ETC. IF REQUIRED ARE TO BE PROVIDED AS NECESSARY.
6. ANY ADDITIONAL HIGH POINT VENTS AND LOW POINT DRAINS TO BE ADDED BY FIELD AS REQUIRED.
7. LOCATE VALVE F041 AS CLOSE AS POSSIBLE TO PUMP SUCTION LINE FROM CONDENSATE STORAGE TANK.
8. FOR INTERLOCKING REQUIREMENTS SEE FUNCTIONAL CONTROL DIAGRAM REF 4.
9. PENETRATION LOCATION TO BE ABOVE MAXIMUM EXPECTED WATER LEVEL, WITH PIPING EXTENDED 4 FT. BELOW LOW WATER LEVEL.
10. PENETRATION LOCATION TO BE MAXIMUM 3 FT. ABOVE NORMAL WATER LEVEL, WITH PIPING EXTENDED 4 FT. BELOW LOW WATER LEVEL.
11. THE BAROMETRIC CONDENSER AND VACUUM TANK SHALL BE LOCATED SO THAT ITS WATER LEVEL IS BELOW THE BOTTOM OF THE TURBINE EXHAUST.
12. "AC" POWER FOR HPCI INSTRUMENTS SHALL BE DERIVED FROM THE PLANT "DC" POWER SYSTEM, VIA AN INVERTER. THE "DC" SOURCE IS TO BE SEPARATE FROM THAT WHICH SUPPLIES THE RCIC SYSTEM.
13. PIPING SHOWN IN PHANTOM TO BE ARRANGED AND SUPPLIED BY TURBINE VENDOR.
14. VALVE F051 SHALL BE LOCATED A MAXIMUM OF SIX FEET FROM THE NOZZLE OF THE TORUS, WITH ADEQUATE CLEARANCE FOR OPERATION OF THE VALVE AND VALVE OPERATOR.
15. FOR LOCATION AND IDENTIFICATION OF INSTRUMENTS SEE INSTRUMENT DATA SHEET LISTED IN MPL FOR EACH INSTRUMENT.
16. FLUSHING CONNECTIONS SHALL BE PROVIDED IN ACCORDANCE WITH MPL ITEM NO. 2A61-4020 SEC 9. TEMPORARY STRAINER SCREENS SHALL BE PROVIDED ON THE SUCTION SIDE OF ALL PUMPS IN ACCORDANCE WITH MPL ITEM NO. 2A61-4020 SEC 9.
17. VALVES ON THIS DWG. ARE NUMBERED FD001 THRU FD020 FOR DRAIN VALVES FV001 THRU FV010 FOR VENT VALVES
18. DELETED

REFERENCES

		MPL. NO.	SSI NO.
1. NUCLEAR BOILER SYS. P & ID	SHT 1	2B21-1010	H-26000
	SHT 2		H-26001
2. NUCLEAR BOILER SYS. FCD		2B21-1030	S25154
3. RHR SYS. P & ID	SHT 1	2E11-1010	H-26014
	SHT 2		H-26015
4. HPCI SYS. FCD		2E41-1030	
5. RCIC SYS. P & ID	SHT 1	2E51-1010	H-26023
	SHT2		H-26024
6. NUCLEAR BOILER LEAK DETECTION SYS. SPEC.		2A61-4040	S25280
7. REACTOR WATER CLEANUP SYS. P & ID	SHT 1	2G31-1010	H-26036
	SHT 2		H-26037
8. TURBINE CONTROLS DIAGRAM		2E41-C002	S25339
9. TURBINE OUTLINE DRAWING		2E41-C002	S25573
10. PLANT REQUIREMENTS		2A61-4020	S25706
11. PROCESS INSTRUMENT PIPING & TUBING INSTALLATION SPEC.		2A61-4070	S25323
12. PIPING & INSTRUMENT SYMBOLS		A42-1010	S15051
13. PRESSURE INTEGRITY OF PIPING & EQUIP PRESSURE PARTS		2A61-4030	S25112
14. HPCI SYS. DESIGN SPEC.		2E41-4010	S25187
15. HPCI SYS. PD		2E41-1020	S25176
16. REACTOR BLDG. VENT. SYS. P.F.D.		2T41-1020	H-26069
17. PRIMARY CONTAINMENT PURGE & INERTING SYS. P&I.D.		2T48-1020	H-26084
18. MSR & HEATER VENTS & SHELL DRAINS SYS. P & ID SHT. 2		2N22-1010	H-21024
19. AUX STEAM P & ID		2P61-1010	H-26063
20. SAFEGUARD EQUIP. EMER. COOLING SYS. P & ID		2T41-1010	H-26071
21. EQUIP. & VALVE DRAINAGE P & ID		2T45-1030	H-26077
22. CRD P & ID		2C11-1010	H-26007
23. SCHEMATIC DIAGRAM FOR POST ACCIDENT REACTOR COOLANT AND CONTAINMENT ATMOSPHERE SAMPLING SYS. HNP-1 & 2.		2P33-1010	H-26384

LICENSE RENEWAL DOCUMENT

MPL NO. 2E41-1010 | ACAD14 | HL26020

SOUTHERN COMPANY

LICENSE RENEWAL SCREENING FOR INFORMATION ONLY

EDWIN I. HATCH NUCLEAR PLANT UNIT No. 2
HPCI SYSTEM
P & ID
SHEET 1

Revision: A	Date: 11-03-99
APPROVED. ISSUED PER LICENSE RENEWAL BOUNDARY PACKAGES. DRAWING CREATED FROM H-26020, REV. 35; BY BKN.	

BY	CHK'D	APPR'L
BKN	RLM	ASK

DRAWN	DESIGNED	LOCATION	DOCUMENT NUMBER	REVISION
BKN	LCF	10-502	HL-26020	A
DATE	SCALE None			