HL-26007

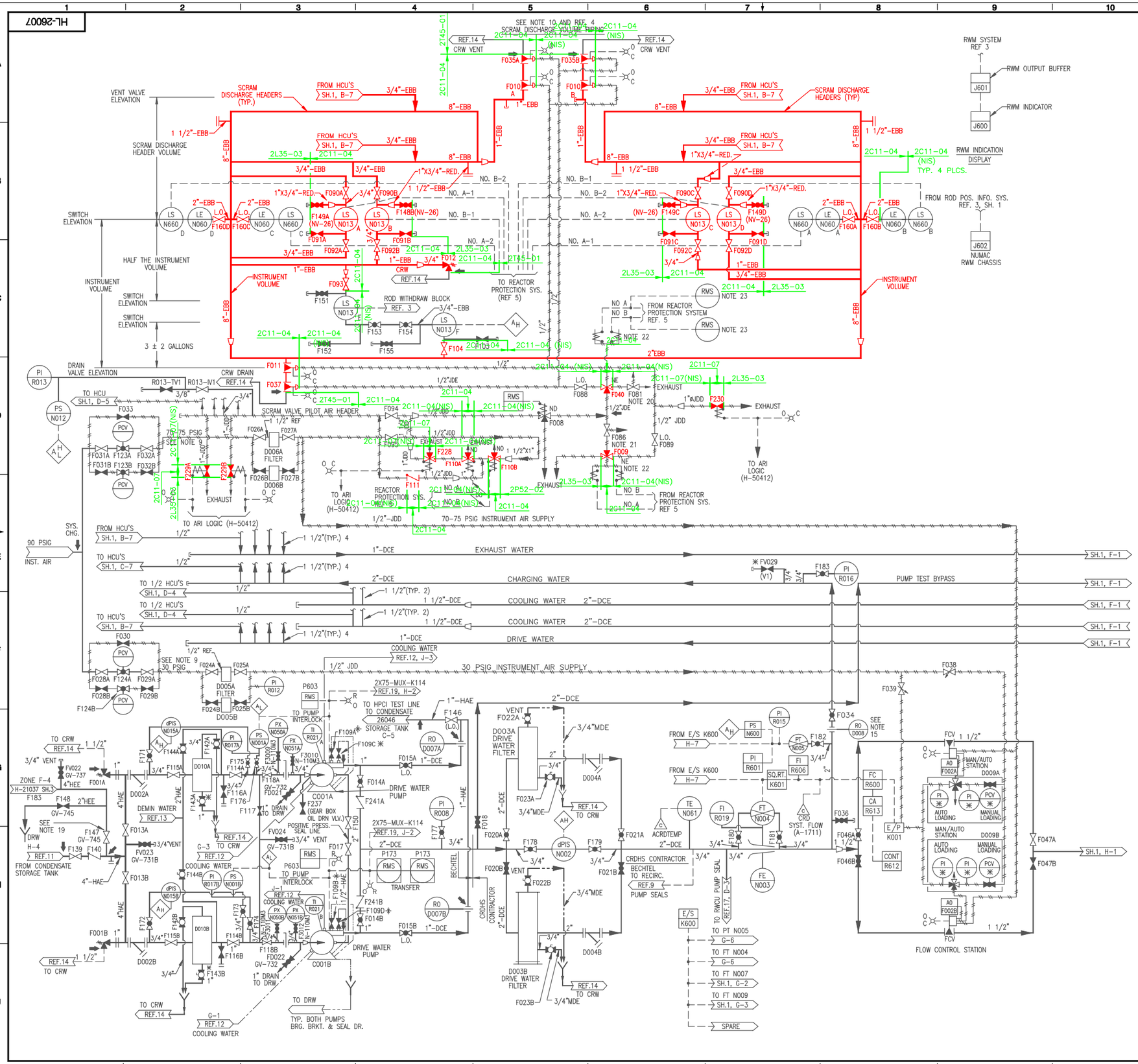


BOUNDARY DIAGRAM NO.:2C11-B01-02

FUNCTION(S) NO.: 2C11-04, 07

PREPARED BY: Alex Morrison
DATE: 01/30/98
REVIEWED BY: Willie Jennings
DATE: 05/28/98

FOR NOTES & REFERENCES SEE DWG. H-26006 SH.1

LICENSE RENEWAL DOCUMENT

MPL NO. 2C11-1010 | ACAD14 | HL26007

SOUTHERN COMPANY

LICENSE RENEWAL SCREENING FOR INFORMATION ONLY

EDWIN I. HATCH NUCLEAR PLANT UNIT No. 2
CONTROL ROD DRIVE SYSTEM
P.&I.D. SHEET 2

| Revision: A | Date: 11-18-99 |
|---|---|
| APPROVED. ISSUED PER LICENSE RENEWAL BOUNDARY PACKAGES. DRAWING CREATED FROM H-26007, REV 29; BY BKN. | |

| BY | CHK'D | APPR'L |
|---|---|---|
| BKN | RLM | ASK |

| DRAWN | DESIGNED | LOCATION | DOCUMENT NUMBER | REVISION |
|---|---|---|---|---|
| BKN | LCF | 10-502 | HL-26007 | A |
| DATE | SCALE None | | | |