HL-23355

BUS 2A

125V DC POWER SUPPLY FOR BKRS.

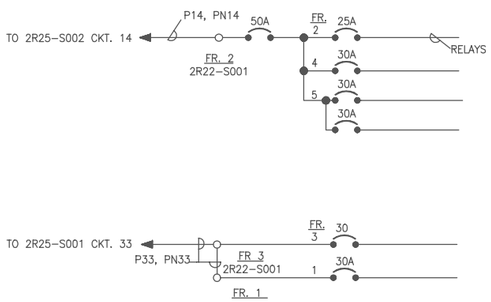

BUS 2B

125V DC POWER SUPPLY FOR BKRS.

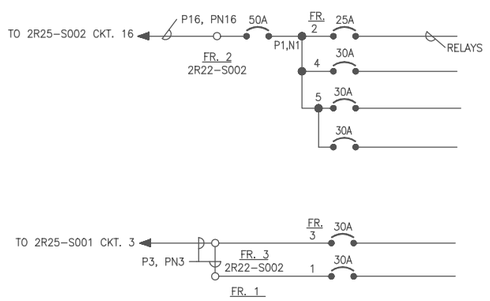

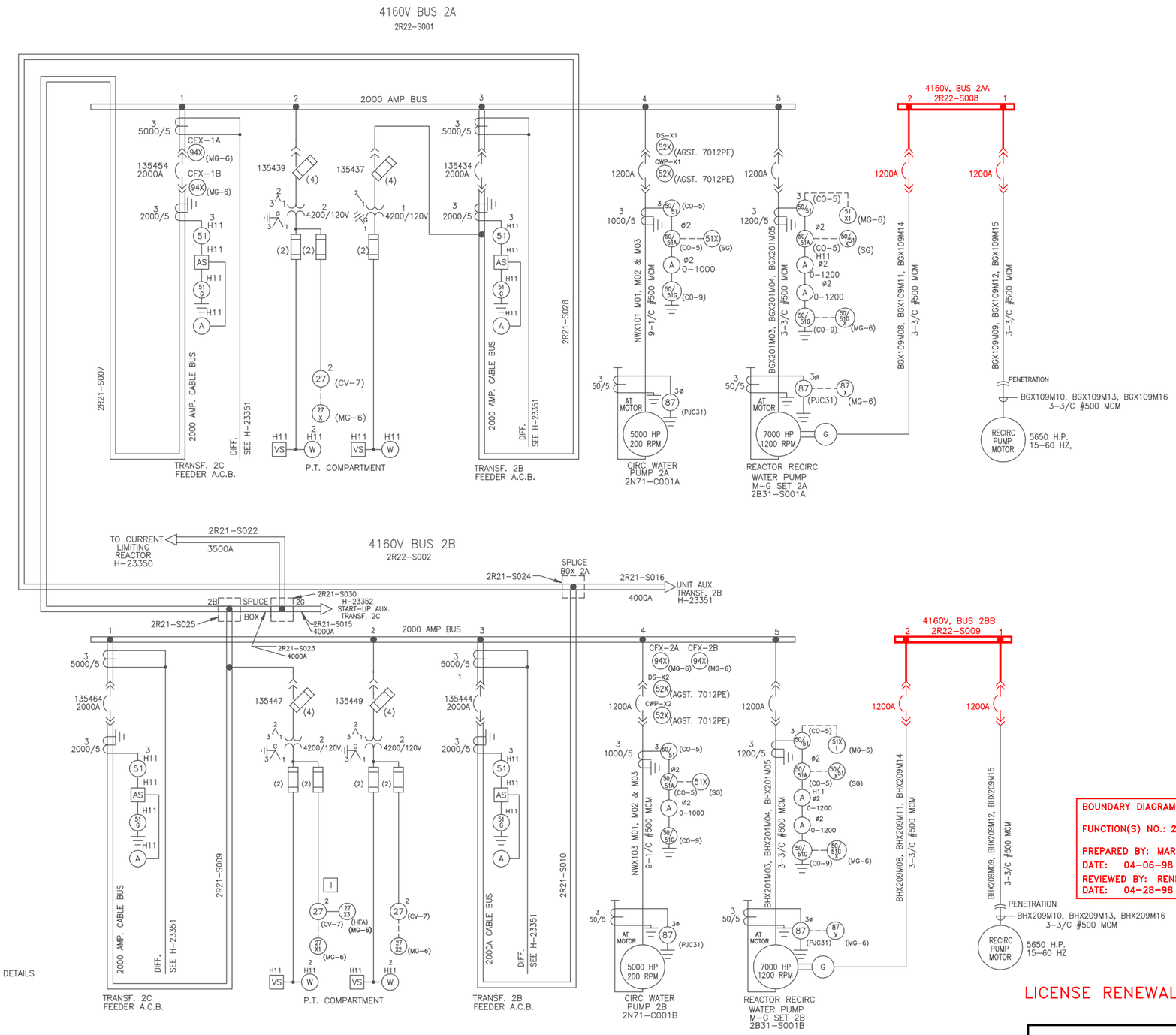

REFERENCES:

H-23350 MASTER SINGLE LINE DIAGRAM
H-23351 SINGLE LINE DIAGRAM-GENERATOR AND STATION SERVICE
H-23124 4160V STA. SERV. CABLE BUSES PROPOSED ARRANGEMENT - DETAILS

NOTES:

1. MPL NO. FOR RELAY 27-1 ASSIGNED 2S32-K772-1.
   MPL NO. FOR RELAY 27-2 ASSIGNED 2S32-K772-2.
2. REFER TO THE MASTER FUSE LIST FOR FUSE DESIGN INFORMATION.

BOUNDARY DIAGRAM NO.:2R20-B01-02
FUNCTION(S) NO.: 2R20-01
PREPARED BY: MARK CRISLER
DATE: 04-06-98
REVIEWED BY: RENEE RITCHEY
DATE: 04-28-98

LICENSE RENEWAL DOCUMENT

ACAD14 HL23355

SOUTHERN COMPANY

LICENSE RENEWAL SCREENING FOR INFORMATION ONLY

Revision: A | Date: 12-30-99

APPROVED. ISSUED PER LICENSE RENEWAL BOUNDARY PACKAGES. DRAWING CREATED FROM H23355, REV. 13; BY ECB

EDWIN I. HATCH NUCLEAR PLANT UNIT No. 2
SINGLE LINE DIAGRAM
4160V BUS 2A & 2B

BY	CHK'D	APPR
ECB	RBR	ASK

DRAWN	DESIGNED	LOCATION	DOCUMENT NUMBER	REVISION
ECB	LCF	10-502	HL-23355	A
DATE	SCALE			