HL-21201

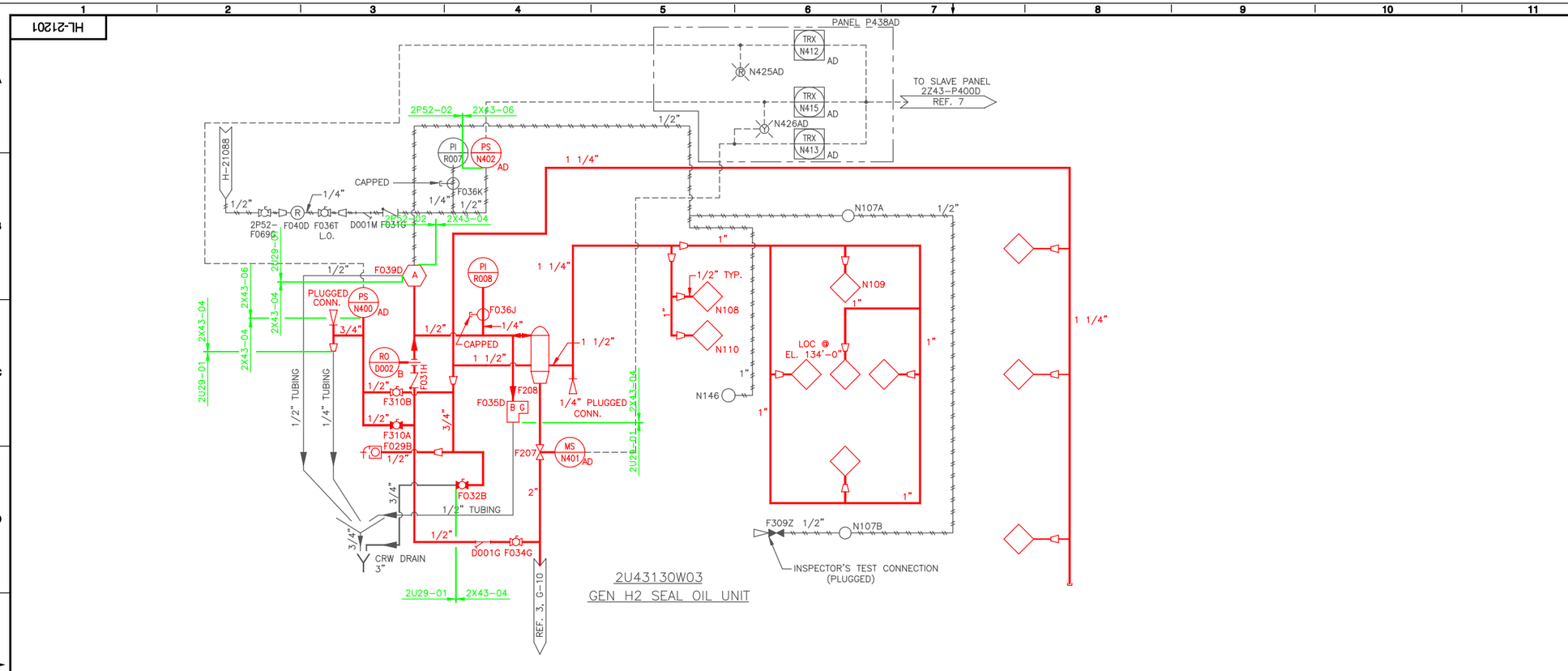

2U43130W03
GEN H2 SEAL OIL UNIT

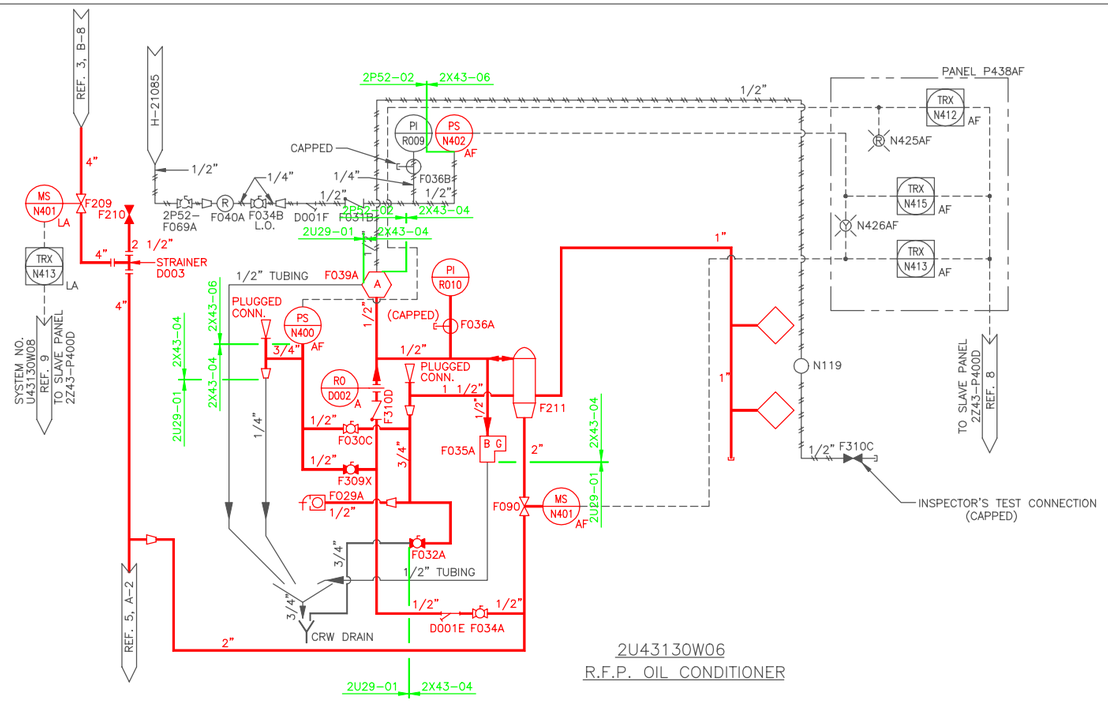

2U43130W06
R.F.P. OIL CONDITIONER

BOUNDARY DIAGRAM NO.:2X43-B06-05
FUNCTION(S) NO.: 2X43-06
PREPARED BY: M D STEPHENS
DATE: 3/19/98
REVIEWED BY: ALEX MORRISON
DATE: 7/15/98

BOUNDARY DIAGRAM NO.:2X43-B01-03
FUNCTION(S) NO.: 2X43-04
2X43-06
PREPARED BY: M D STEPHENS
DATE: 2/6/98
REVIEWED BY: ALEX MORRISON
DATE: 7/13/98

NOTES

1. ALL EQUIPMENT & INSTRUMENTS ARE PREFIXED WITH 2U43 UNLESS OTHERWISE NOTED.

LEGEND

- TRX — ADDRESSABLE INTERFACE MODULE
- 1/2" SPRINKLER HEAD
- BALL DRIP VALVE
- B G — BREAK GLASS STATION
- PILOT HEAD
- SPRAY NOZZLE
- A — DRY PILOT ACTUATOR
- R — REGULATOR
- FLOODING VALVE
- MULTIPORT GAUGE TEST VALVE
- MS — MONITOR SWITCH

REFERENCE:

TITLE	MPL. NO.	DWG. NO.
1. FIRE PROT PIPING H2 SEAL OIL UNIT		H-26374
2. FIRE PROTECTION PIPING RFPT OIL COND. AREA		H-26375
3. TURBINE BUILDING FIRE PROTECTION SYSTEM P&ID	2U43-1010	H-21016
4. TURBINE BUILDING FIRE PROTECTION SYSTEM P&ID SHT. 3 OF 5	2U43-1010	H-21200
5. TURBINE BUILDING FIRE PROTECTION SYSTEM P&ID SHT. 5 OF 5	2U43-1010	H-21202
6. PUMPHOUSE FIRE PROTECTION P&ID SHT 1 OF 3		H-11033
7. FIRE PROTECTION	FCD	2U43130W03-B-24635
8. FIRE PROTECTION	FCD	2U43130W06-B-24636
9. FIRE PROTECTION	FCD	2U43130W08-B-24713

LICENSE RENEWAL DOCUMENT

MPL NO. 2U43-1010 | ACAD14 | HL21201

SOUTHERN COMPANY

LICENSE RENEWAL SCREENING FOR INFORMATION ONLY

EDWIN I. HATCH NUCLEAR PLANT UNIT No. 2
TURBINE BULIDING
FIRE PROTECTION SYSTEM P&ID SHT.4 OF 5

Revision: A | Date: 12-03-99

APPROVED. ISSUED PER LICENSE RENEWAL BOUNDARY PACKAGES. DRAWING CREATED FROM H-21201, REV.11; BY TRM.

BY	CHK'D	APPR
TRM	MDS	ASK

DRAWN	DESIGNED	LOCATION	DOCUMENT NUMBER	REVISION
TRM	LCF	10-502	HL-21201	A
DATE	SCALE: None			