HL-21198

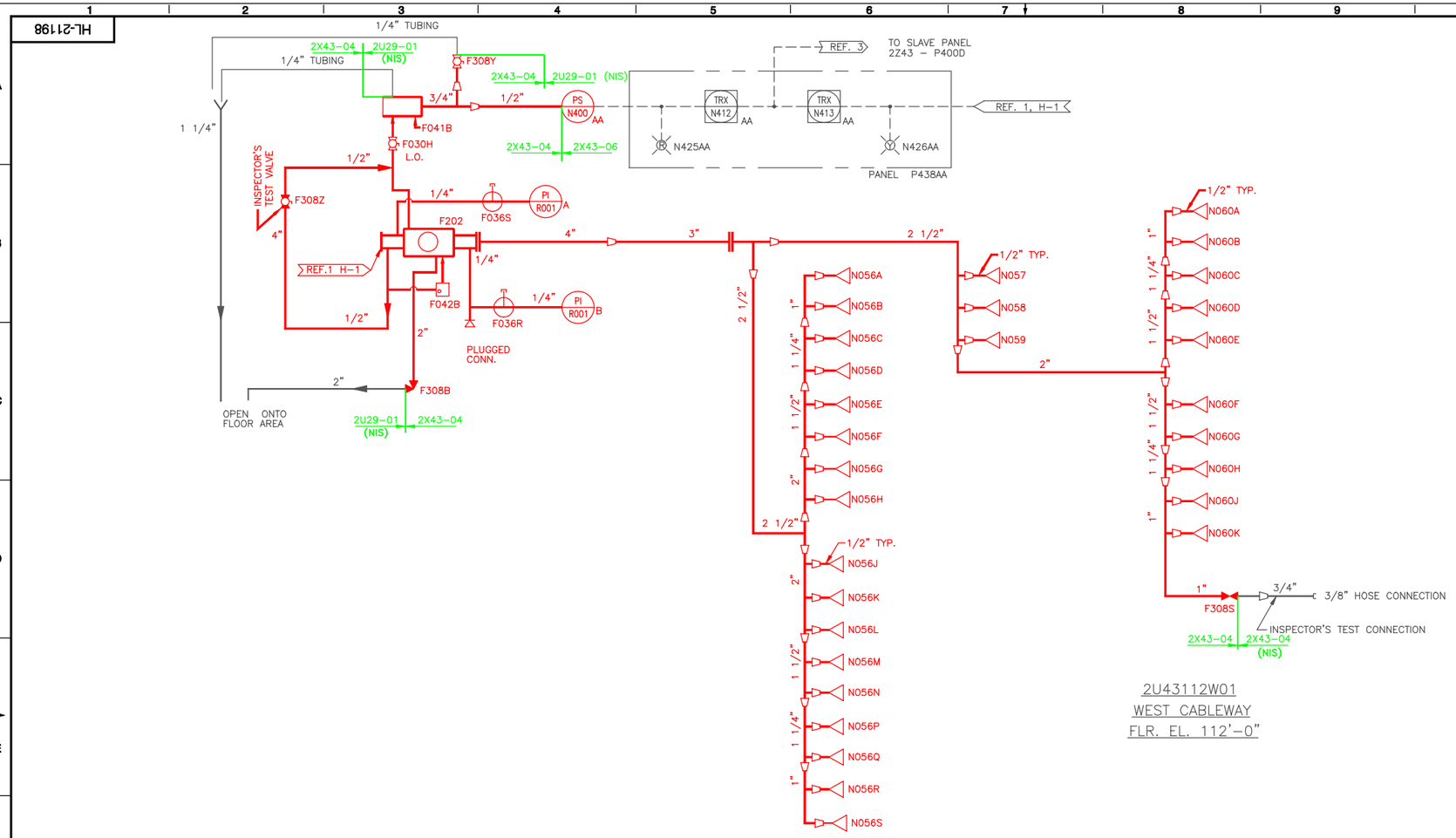

2U43112W01
WEST CABLEWAY
FLR. EL. 112'-0"

NOTES

1. 2U43112W01 – ALL EQUIPMENT & INSTRUMENTS ARE PREFIXED WITH 2U43 UNLESS OTHERWISE NOTED.
2. 2Z43112W13 – ALL EQUIPMENT & INSTRUMENTS ARE PREFIXED WITH 2Z43 UNLESS OTHERWISE NOTED.

LEGEND:

- PLUGGED CONNECTION
- 1/2" SPRINKLER HEAD (GRINNELL 1/2" SSU-3 DURASPEED 212°F)
- BREAK GLASS STATION
- SIDE OUTLET GLOBE VALVE
- BALL DRIP VALVE
- ADDRESSABLE INTERFACE MODULE
- RESTRICTION CHECK VALVE
- ALARM VALVE
- RETARD CHAMBER
- PILOT HEAD (175°F)
- SPRAY NOZZLE
- DRY PILOT ACTUATOR
- REGULATOR
- FLOODING VALVE (GRINNELL MODULE B)
- PLUG VALVE N.O.
- PLUG VALVE N.C.
- MONITOR SWITCH
- BELL
- GLOBE VALVE – (CLOSED)

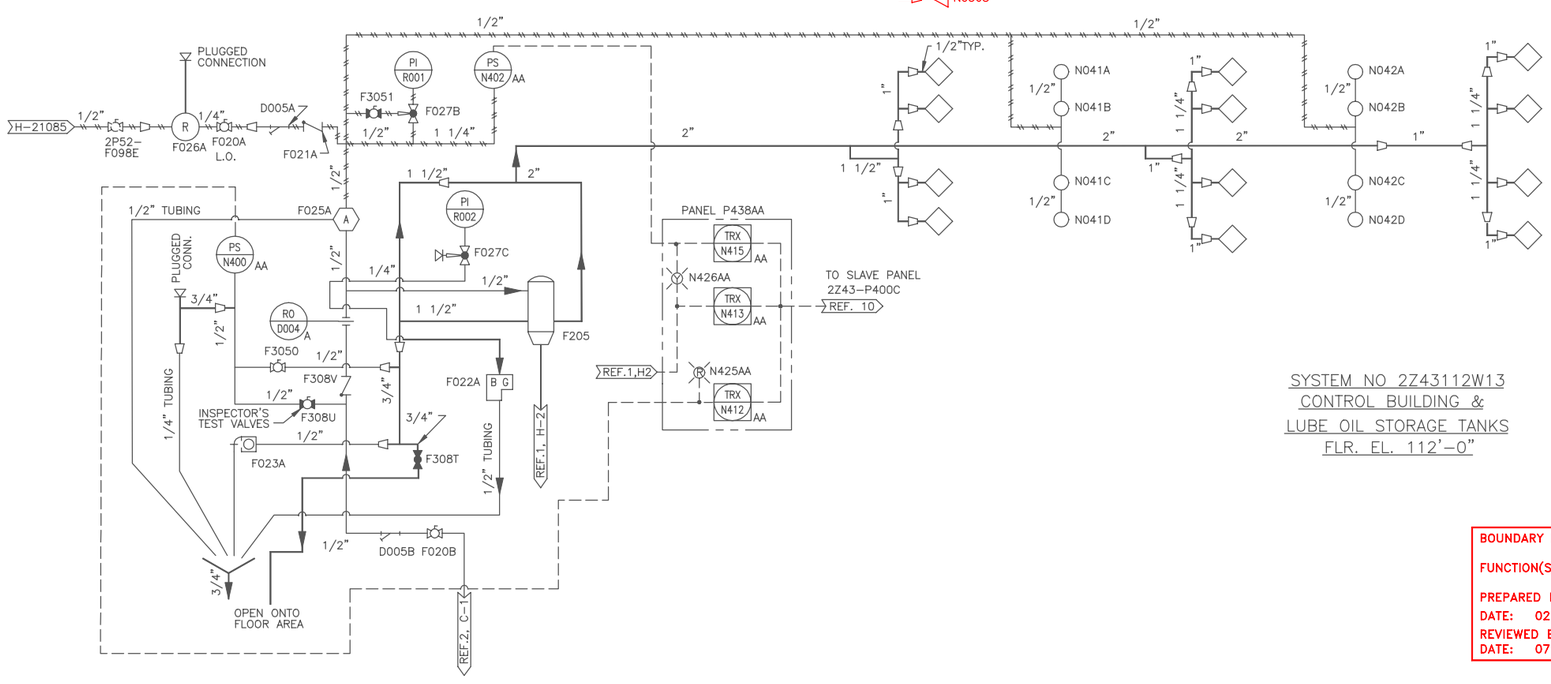

SYSTEM NO 2Z43112W13
CONTROL BUILDING &
LUBE OIL STORAGE TANKS
FLR. EL. 112'-0"

REFERENCES:

TITLE	MPL NO.	DWG NO.
1. TURBINE BUILDING– FIRE PROTECTION SYSTEM	2U43–1010	H–21016
2. TURBINE BUILDING – FIRE PROTECTION SYSTEM SHT. 2 OF 5	2Z43–1010 2U43–1010	H–21199
3. FIRE PROTECTION–FCD– 2U43112W01	2U43	B–24630
4. BILL OF MATERIAL		NONE
5. WEST CABLEWAY (VENDOR)		SX–24976
6. INST. MANUAL		SX–29668
7. HEADER DETAILS		SX–26300
8. SPRINKLER DETAILS		H–26371
9. TURBINE BUILDING – FIRE PROTECTION SYSTEM – PLAN	2U43 2Z43	H–21176
10. FIRE PROTECTION – FCD 2Z43112W13	2Z43	B–24689

LICENSE RENEWAL DOCUMENT

MPL. NO. 2U43-1010 / 2Z43-1010 | ACAD14 | HL21198

BOUNDARY DIAGRAM NO.:2X43–B01–07
FUNCTION(S) NO.: 2X43–04, 2X43–06
PREPARED BY: M. D. STEPHENS
DATE: 02–06–98
REVIEWED BY: ALEX MORRISON
DATE: 07–13–98

Revision: A | Date: 12–22–99
APPROVED. ISSUED PER LICENSE RENEWAL BOUNDARY PACKAGES. DRAWING CREATED FROM H–21198, REV. 10; ECB

BY	CHK'D	APPR
ECB	MDS	ASK

SOUTHERN COMPANY

LICENSE RENEWAL SCREENING FOR INFORMATION ONLY

EDWIN I. HATCH NUCLEAR PLANT UNIT No.2
TURBINE BUILDING
FIRE PROTECTION SYSTEM P&ID. SHT. 1 OF 5

DRAWN	DESIGNED	LOCATION	DOCUMENT NUMBER	REVISION
ECB	LCF	10-502	HL-21198	A
DATE	SCALE None			