HL-21196

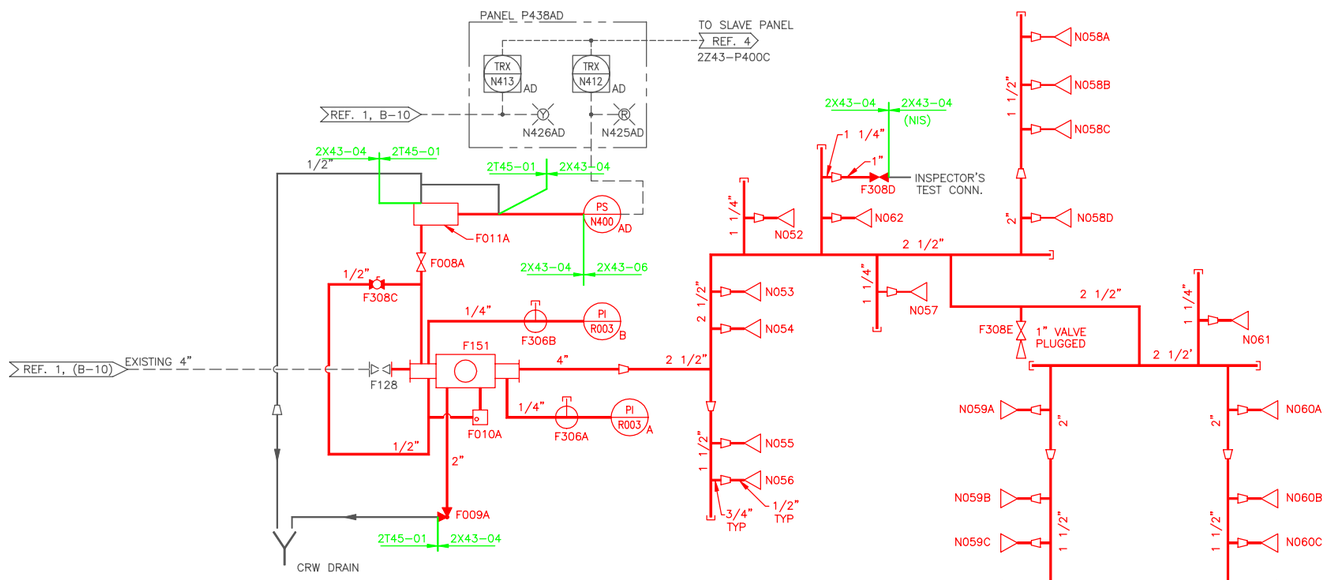

2T43087W06
H.P.C.I. RM CEILING
FLR. EL. 87'-0"

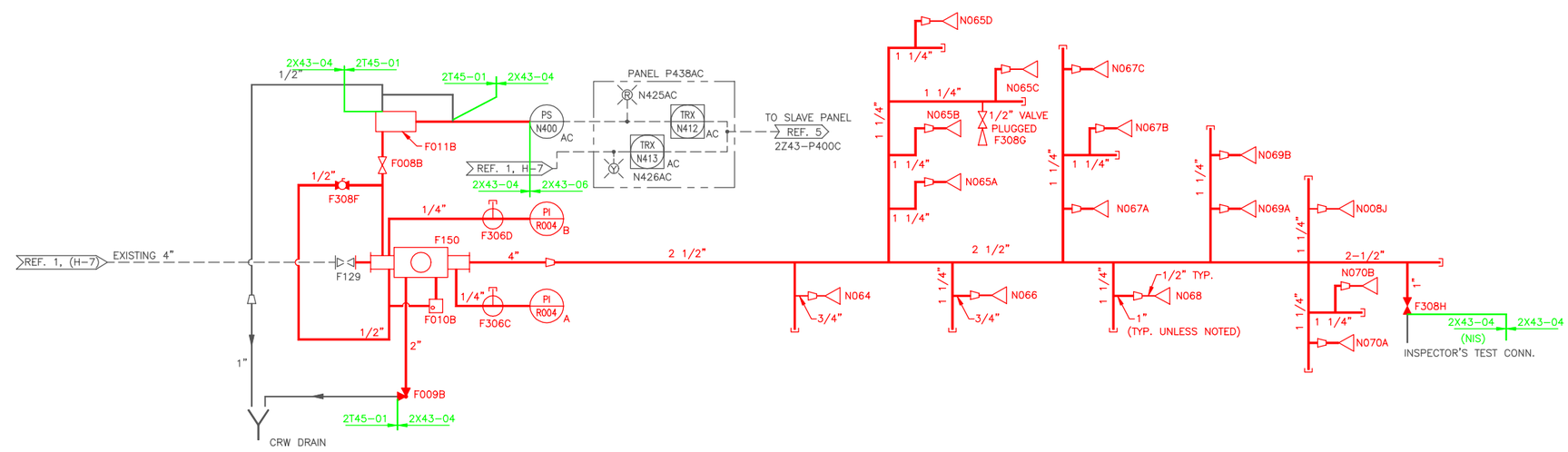

2T43087W05
R.C.I.C. PUMP & T. RM
FLR. EL. 87'-0"

NOTES

1. ALL EQUIPMENT & INSTRUMENTS ARE PREFIXED BY SYSTEM No. 2T43 UNLESS OTHERWISE NOTED.

LEGEND

- 1/2" SPRINKLER HEAD – GRINNELL SSU-3
  1/2" 165°F DURASPEED SPRINKLER
- BREAK GLASS STATION
- MULTIPORT GAGE TEST VALVE
- BALL DRIP VALVE
- MULTIMATIC VALVE
- RESTRICTION CHECK VALVE
- ALARM VALVE (GRINNELL MODEL A)
- RETARD CHAMBER
- ADDRESSABLE INTERFACE MODULE
- PLUG VALVE
- GLOBE VALVE
- GATE VALVE
- REDUCER
- CAP
- PRESSURE SWITCH
- PRESSURE INDICATOR

REFERENCES:

TITLE	MPL NO.	DWG NO.
1. REACTOR & RADWASTE BLDG.–FIRE PROT. SYS P&ID.	2T43-1010	H-21017
2. FOR SYSTEM PIPING SEE GRINELL DWG.	VENDOR	SCS
	24-102-3	SX-24837
	24-102-4	SX-28702
	24-102-2A	S-60240
3. FIRE PROTECTION INSTRUCTION MANUAL		SX 29668
4. FIRE PROTECTION FCD, 2T43087W06		B-24608
5. FIRE PROTECTION FCD, 2T43087W05		B-24607

BOUNDARY DIAGRAM NO.:2X43-B01-11
FUNCTION(S) NO.: 2X43-04, 2X43-06
PREPARED BY: M. D. STEPHENS
DATE: 02-06-98
REVIEWED BY: ALEX MORRISON
DATE: 07-13-98

LICENSE RENEWAL DOCUMENT

MPL. NO. 2T43-1010 | ACAD14 | HL21196

SOUTHERN COMPANY

LICENSE RENEWAL SCREENING FOR INFORMATION ONLY

EDWIN I. HATCH NUCLEAR PLANT UNIT No.2
REACTOR BUILDING
FIRE PROTECTION SYSTEM P&ID SHT. 1 OF 2

Revision: A	Date: 12-22-99

APPROVED. ISSUED PER LICENSE RENEWAL BOUNDARY PACKAGES. DRAWING CREATED FROM H-21196, REV. 5; ECB

BY	CHK'D	APPR
ECB	MDS	ASK

DRAWN	DESIGNED	LOCATION	DOCUMENT NUMBER	REVISION
ECB	LCF	10-502	HL-21196	A
DATE	SCALE: None			