HL-21035

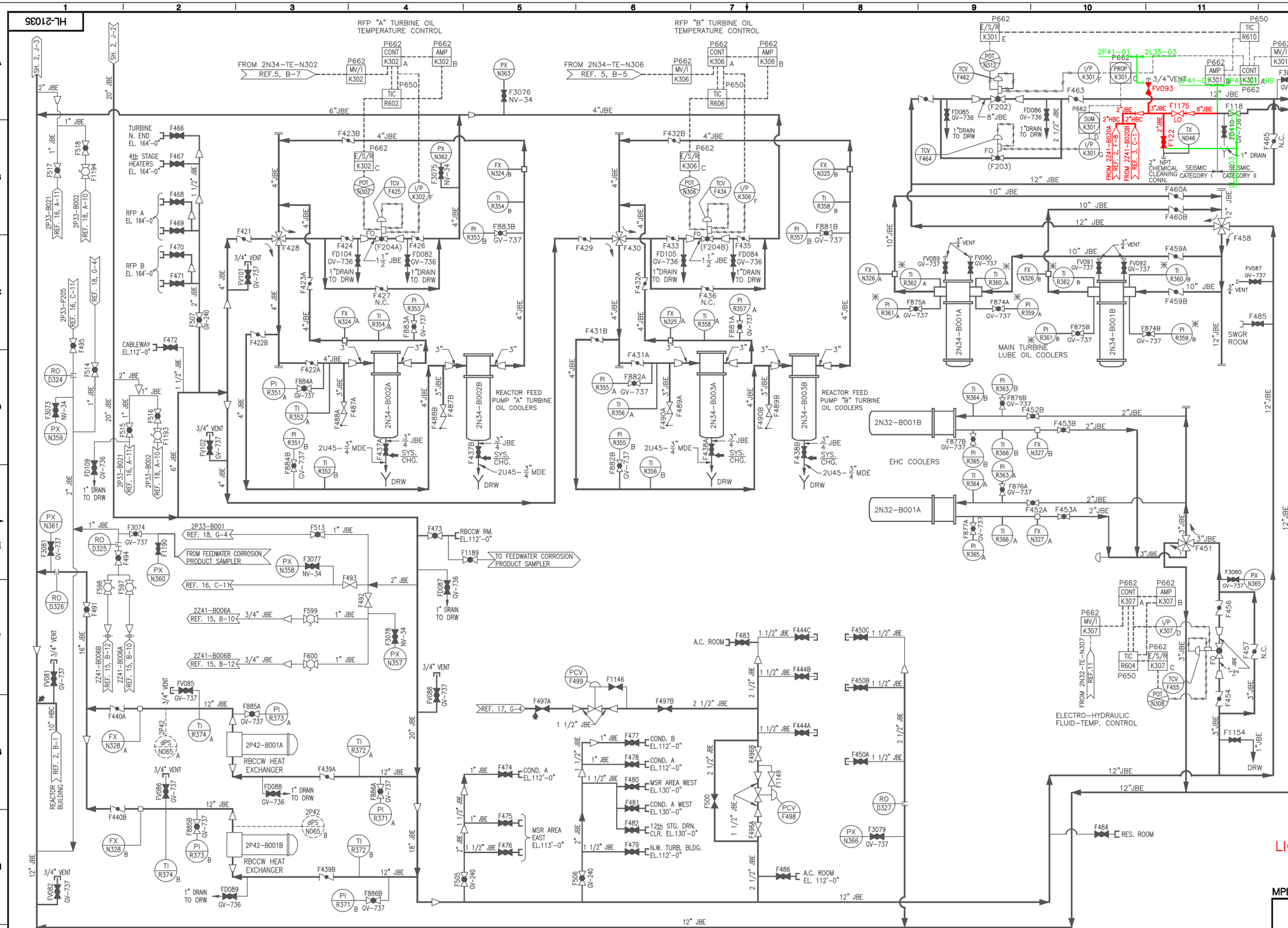

REFERENCES:

TITLE	MPL.NO.	DWG.NO.
1. SERVICE WATER AT INTAKE STRUCTURE P&ID (UNIT 1)	P41-1010	D-11001
2. REACTOR BUILDING SERVICE WATER SYS P&ID SH.1	2P41-1010	H-26050
3. REACTOR BUILDING SERVICE WATER SYS P&ID SH.2	2P41-1010	H-26051
4. MAIN & R.F.P. TURBINE LUBE OIL SYS. P&ID SH.1	2N34-1010	H-21051
5. MAIN & R.F.P. TURBINE LUBE OIL SYS. P&ID SH.2	2N34-1010	H-21052
6. CONTROL BLDG SERVICE AIR SYS. P&ID SH.1	2P51-1010	H-21028
7. CIRCULATING WATER SYSTEM P&ID	2N71-1010	H-21026
8. WASTE GAS TREATMENT SUPPORT SYS. P&ID	2N62-1020	H-26043
9. TURBINE BLDG CHILLED WATER SYS. P&ID	2P63-1030	H-26088
10. RADWASTE BLDG SUPPORT SYSTEMS P&ID & PFD		H-26035
11. TURBINE CONTROL DIAGRAM	2N32-1020	251R133
12. RHR SERVICE WATER SYSTEM P&ID	2E11-1010	H-21039
13. REACTOR, RADWASTE & TURBINE BLDG AUX. STEAM	2P61-1010	H-26063
14. TURB. & GEN. AUX. SYS. I.E.D. H2 GAS COOLING WATER SYSTEM		H-21241
15. CONTROL BLDG VENT. PROCESS FLOW DIAG.		H-26093
16. WATER ANALYSIS INSTRUMENT DIAG.		H-21205
17. TURB. BLDG. FIRE PROT. SYS. P&ID	2U43-1010	H-21016
18. TURB. BLDG SAMPLING SYS P&ID SHEET 2	2P33-1010	H-21216
19. CONTROL BUILDING VENTILATION P&ID	Z41-1010	H-16040
20. DIGITAL INPUT SIGNALS TO THE ERF COMPUTER SYS I.E.D. SHEET 7 OF 15	2X75-1010	H-26176

NOTE:
FOR NOTES
SEE DRAWING H-21033

BOUNDARY DIAGRAM NO.:2P41-B01-02

FUNCTION(S) NO.: 2P41-01

PREPARED BY: ALEX MORRISON
DATE: 5/5/98
REVIEWED BY: BO ROSBERG
DATE: 5/5/98

LICENSE RENEWAL DOCUMENT

FOR LVN SEE DWG H-26050, NOTE 10.

MPL NO. 2P41-1010 | ACAD14 | HL21035

SOUTHERN COMPANY

LICENSE RENEWAL SCREENING
FOR INFORMATION ONLY

EDWIN I. HATCH NUCLEAR PLANT UNIT No.2
TURBINE BUILDING
SERVICE WATER SYSTEM-P&ID, SH.3

Revision: A	Date: 12-28-99
APPROVED. ISSUED PER LICENSE RENEWAL BOUNDARY PACKAGES. DRAWING CREATED FROM H-21035, REV.30; BY TRM.	

BY	CHK'D	APPR.
TRM	RLM	ASK

DRAWN	DESIGNED	LOCATION	DOCUMENT NUMBER	REVISION
TRM	LCF	10-502	HL-21035	A
DATE	SCALE None			