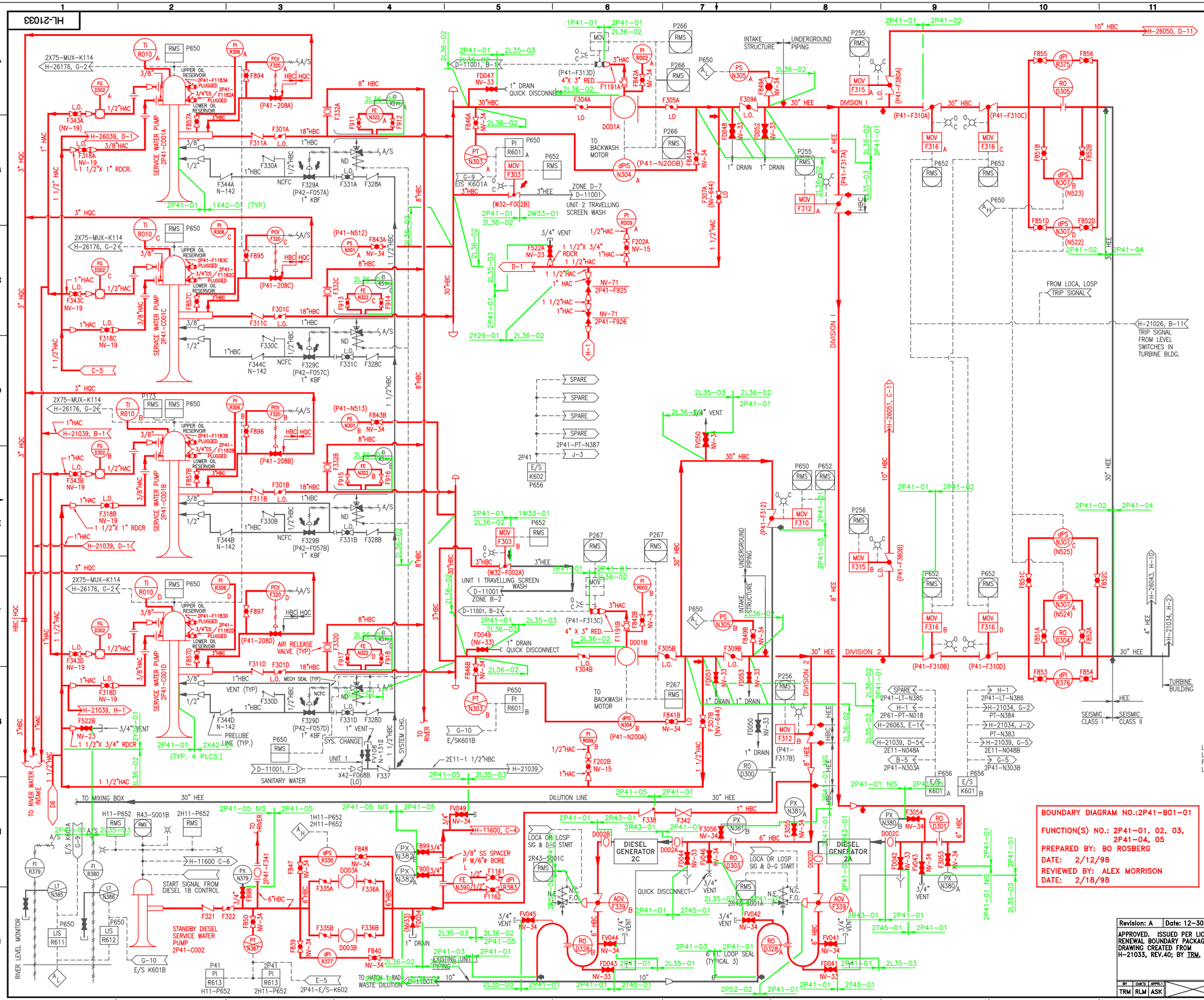

NOTES:

1. ALL EQUIPMENT AND INSTRUMENTS ARE PREFIXED BY MPL NUMBER 2P41 UNLESS OTHERWISE NOTED.
2. WHERE GV–NUMBERS ARE SHOWN, THE VALVES ARE TAGGED WITH THESE NUMBERS, WHERE GV–NUMBERS ARE NOT SHOWN, THE VALVES ARE TAGGED WITH THE MPL NUMBER.
3. ANY ADDITIONAL HIGH POINT VENTS AND LOW POINT DRAINS TO BE ADDED BY FIELD AS REQUIRED.
4. FOR LOCATION AND IDENTIFICATION OF INSTRUMENTS, SEE INSTRUMENT DATA SHEET LISTED IN MPL FOR EACH INSTRUMENT.
5. INSTRUMENT LINE VALVING MUST COMPLY WITH PIPING STANDARD SPECIFICATION.
6. INSTRUMENT PIPING OR TUBING BEYOND THE ROOT VALVE IS TO BE IN ACCORDANCE WITH THE INSTRUMENT INSTALLATION DETAILS DRAWING A–26412.
7. VALVE AND INSTRUMENT NUMBERS IN PARENTHESIS INDICATES VALVE OR INSTRUMENT NUMBER OF CORRESPONING VALVE OR INSTRUMENT ON UNIT 1.
8. ALL SERVICE WATER CONNECTIONS FROM HEADER TO HOSE CONNECTIONS AND VALVES TO BE 1" UNLESS SPECIFIED OTHERWISE.
9. ON A L.O.S.P. VALVES F316 A, B, C, & D CLOSE AUTOMATICALLY ISOLATING THE TURBINE BLDG. ONCE IT IS DETERMINED THAT THERE IS NO PIPE BREAK IN THE TURBINE BLDG., VALVES F316 A, B, C, & D ARE RE–OPENED.
10. VALVES ON THIS DRAWING ARE NUMBERED:
    FV041 THRU FV060 FOR VENT VALVES
    FD041 THRU FD060 FOR DRAIN VALVES
11. THIS SECTION OF PIPING TO BE REMOVED DURING INSTALLATION OF COOLERS 2Z41–B020A & B.
12. RO–D329 IS A COMBINATION RESTRICTION ORIFICE AND SPACER PLATE. SPACER PLATE TO BE INSTALLED WHEN 2P41–C002 IS ALIGNED. RESTRICTION ORIFICE TO BE ALIGNED WHENEVER UNIT #1 SERVICE WATER SYSTEM IS ALIGNED.
13. THE SERVICE WATER PUMP MOTORS SERIAL NUMBERS KKJ1023014, KKJ1023013, BGJ224011 AND KKJ1023016 ARE INSTALLED ON PUMPS C001A, B, C AND D RESPECTIVELY.

BOUNDARY DIAGRAM NO.:2L36–B01–01
FUNCTION(S) NO.: 2L36–02
PREPARED BY: M D STEPHENS
DATE: 3/3/99
REVIEWED BY: WILLIE JENNINGS
DATE: 3/3/99

LVN–FD053
LVN–FV050
FVN–F301
LVN–F844

BOUNDARY DIAGRAM NO.:2P41–B01–01
FUNCTION(S) NO.: 2P41–01, 02, 03, 2P41–04, 05
PREPARED BY: BO ROSBERG
DATE: 2/12/98
REVIEWED BY: ALEX MORRISON
DATE: 2/18/98

LICENSE RENEWAL DOCUMENT

MPL NO. 2P41-1010 | ACAD14 | HL21033

SOUTHERN COMPANY

LICENSE RENEWAL SCREENING FOR INFORMATION ONLY

EDWIN I. HATCH NUCLEAR PLANT UNIT No.2
TURBINE BUILDING
SERVICE WATER SYSTEM–P&ID, SH. 1

Revision: A	Date: 12–30–99
APPROVED. ISSUED PER LICENSE RENEWAL BOUNDARY PACKAGES. DRAWING CREATED FROM H–21033, REV.40; BY TRM.	

BY	CH'D	APPR.1
TRM	RLM	ASK

DRAWN	DESIGNED	LOCATION	DOCUMENT NUMBER	REVISION
TRM	LCF	10-502	HL-21033	A
DATE	SCALE None			