HL-21016

HOSE STATION	LOCATION ELEVATION	LOCATION COLUMN	VALVE "A" MPL. NO.			VALVE "B" MPL. NO.	REMARKS
2HS – T01	112'–0"	T16 – TA	2U43–F001			2U43–F004	
2HS – T03		T22 – TC	F005			F008	
2HS – T04		T21 – TG	F009			F012	
2HS – T02		T18 – TB	F013			F016	
2HS – T05		T18 – TI	F017			F020	
2HS – T11	130'–0"	T16 – TA	F021			F024	
2HS – T12		T20 – TA	F025			F028	
2HS – T13		T22 – TF	F029			F032	
2HS – T14		T18 – TI	F033			F036	
2HS – T10		T15 – TE	F037			F040	
2HS – T21	147'–0"	T16 – TA	F041			F044	
2HS – T22		T20 – TA	F045			F048	
2HS – T23		T22 – TF	F049			F052	
2HS – T31	164'–0"	T16 – TA	F053			F056	
2HS – T32		T18 – TD	F057			F060	
2HS – T33		T20 – TA	F061			F064	
2HS – T34		T22 – TF	F065			F068	
2HS – T35		T18 – TI	F069			F072	
2HS – T30		T15 – TG	F073			F076	

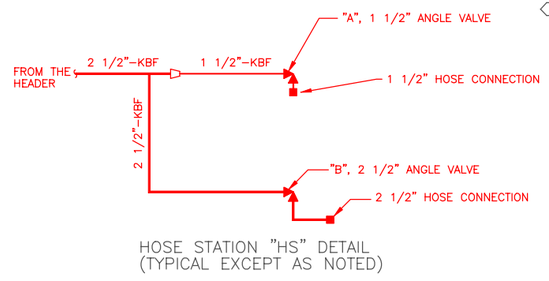

HOSE STATION "HS" DETAIL
(TYPICAL EXCEPT AS NOTED)

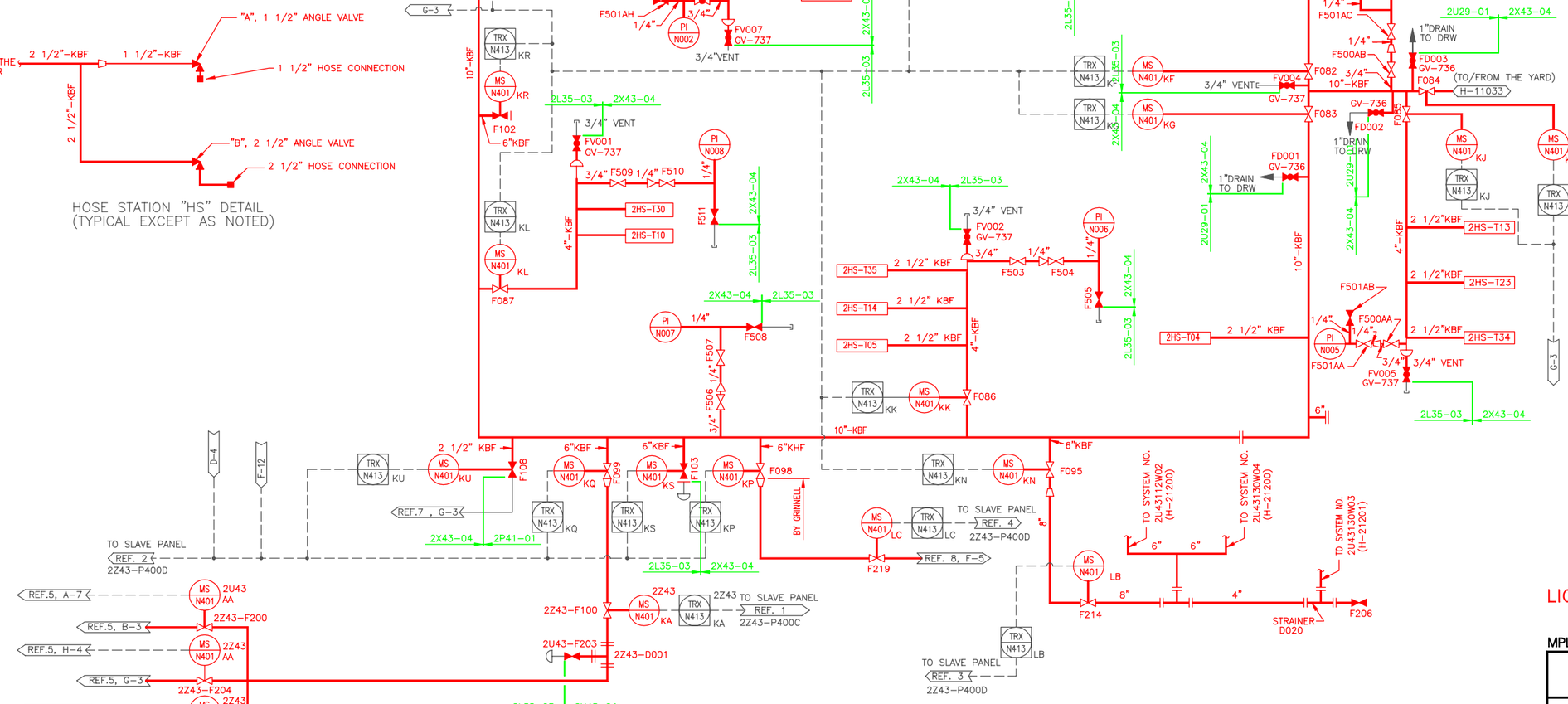

NOTES

1. ALL EQUIPMENT AND INSTRUMENTS PREFIXED BY MPL NUMBER 2U43 UNLESS OTHERWISE NOTED.
2. WHERE GV–NUMBERS ARE SHOWN, THE VALVES ARE TAGGED WITH THESE NUMBERS: WHERE GV–NUMBERS ARE NOT SHOWN, THE VALVES ARE TAGGED WITH MPL NUMBER.
3. ANY ADDITIONAL HIGH POINT VENTS & LOW POINT DRAINS TO BE ADDED BY FIELD AS REQUIRED.
4. FOR LOCATION & IDENTIFICATION OF INSTRUMENTS SEE INSTRUMENT DATA SHEET LISTED IN MPL FOR EACH INSTRUMENT.
5. INSTRUMENT LINE VALVING MUST COMPLY WITH PIPING STANDARD SPEC.
6. INSTRUMENT PIPING OR TUBING BEYOND THE ROOT VALVE IS TO BE IN ACCORDANCE WITH THE INSTRUMENT INSTALLATION DETAILS DWG. A–26412
7. ALL HEADER VALVES TO BE LOCKED OPEN.
8. FIRE SYSTEM NO. 2Z43112W17
9. FIRE SYSTEM NO. 2U43112W03
10. FIRE SYSTEM NO. 2U43130W08
11. FIRE SYSTEM NO. 2U43164W19

LEGEND

MS — MONITOR SWITCH

TRX — ADDRESSABLE INTERFACE MODULE

REFERENCES:

1. FIRE PROTECTION FCD 2Z43112W17	B–24715
2. FIRE PROTECTION FCD 2U43112W03	B–24712
3. FIRE PROTECTION FCD 2U43130W08	B–24713
4. FIRE PROTECTION FCD 2U43164W19	B–24714
5. TURBINE BLDG. FIRE PROTECTION SYSTEM P&ID SHT. 1	H–21198
6. TURBINE BLDG. FIRE PROTECTION SYSTEM P&ID SHT. 2	H–21199
7. TURBINE BLDG. SERVICE WATER SYS. P&ID SHT. 3	H–21035
8. TURBINE BLDG. FIRE PROTECTION BEARINGS P&ID	H–21189

BOUNDARY DIAGRAM NO.:2X43–B01–01

FUNCTION(S) NO.: 2X43–04

PREPARED BY: M D STEPHENS
DATE: 2/6/98
REVIEWED BY: ALEX MORRISON
DATE: 7/13/98

LICENSE RENEWAL DOCUMENT
(LVN–FD003)
(LVN–FV006)
(LVN–F220)

MPL. NO. 2U43-1010 | ACAD14 | HL21016

SOUTHERN COMPANY

LICENSE RENEWAL SCREENING FOR INFORMATION ONLY

EDWIN I. HATCH NUCLEAR PLANT UNIT No.2
TURBINE BUILDING FIRE PROTECTION SYSTEM P.&I.D.

Revision: A	Date: 11–02–99
APPROVED. ISSUED PER LICENSE RENEWAL BOUNDARY PACKAGES. DRAWING CREATED FROM H–21016, REV.17; BY TRM.	

BY	CHK'D	APPR.
TRM	MDS	ASK

DRAWN	DESIGNED	LOCATION	DOCUMENT NUMBER	REVISION
TRM	LCF	10-502	HL-21016	A
DATE	SCALE None			