HL-16332

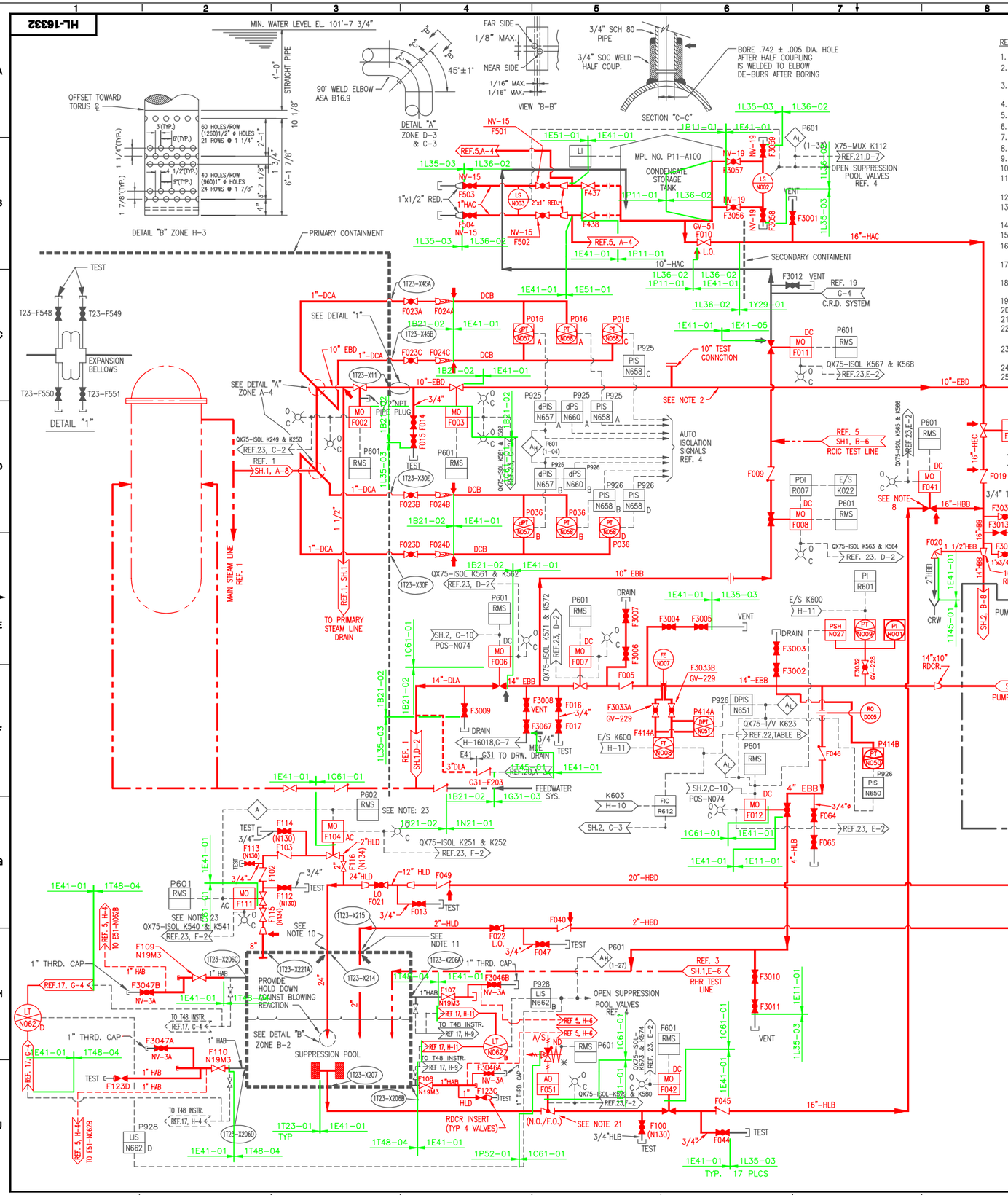

REFERENCE DOCUMENTS :	MPL ITEM NO	BECHTEL OR SSI. NO
1. NUCLEAR BOILER SYS P&ID SHT 1&2	B21-1010	H-16062 & 63
2. NUCLEAR BOILER SYS FCD	B21-1030	S-15267
3. RHR SYS P&ID, SHT. 1 & SHT 2	E11-1010	H-16329 / H-16330
4. HPCI SYS FCD	E41-1030	S-16153
5. RCIC SYS P&ID, SHT. 1	E51-1010	H-16334
6. NUCLEAR BOILER LEAK DETECTION SYS. DES. SPEC	A61-4040	S-15530
7. REACTOR WATER CLEANUP SYS P&ID SHT. 1&2	G31-1010	H-16188 & 89
8. TURBINE CONTROLS DIAGRAM	VPF 2763-022	
9. TURBINE OUTLINE DRAWING	VPF 2763-001	S-15506
10. PLANT REQUIREMENTS	A61-4020	S-17109
11. PROCESS INSTRUMENT PIPING AND TUBING INSTALLATION SPEC.	A61-4070	S-15426
12. PIPING & INSTRUMENT SYMBOLS	A41-1010	S-15051
13. FURN. FAB., DEL. & ERECT PIPING & SETTING OF MECH. EQUIPMENT.		SS-6909-1
14. HPCI SYS DESIGN SPEC	E41-4010	S-15191
15. HPCI SYS PD	E41-1020	S-16122
16. REACTOR BUILDING VENTILATION SYS. PFD	T41-1040	H-16006
17. PRIMARY CONTAINMENT PURGE & INERTING P.&I.D.	T48-1020	H-16024
18. DRYWELL VALVE & EQUIP DRAINAGE SYS. P.&I.D.		H-16199
19. CRD SYSTEM P.&I.D. SHT 2		H-16065
20. REACTOR WATER CLEAN-UP SYSTEM P&ID SHT 1	G31-1010	H-16188
21. ANNUNCIATOR SIGNALS TO TSC I.E.D.	X75-1010	H-16402
22. CLASS IE ANALOG SIGNAL CONVERSION/ISOLATION SYSTEM I.E.D.	X75-1010	H-16394
23. DIGITAL INPUT SIGNALS TO THE ERF COMPUTER SYSTEM I.E.D. SHT 5 OF 15.	X75-1010	H-16407
24. TERRY TURBINE MANUAL DWG. 66262D		S-19823
25. RCIC SYS. P&ID SH. 2	E51-1010	H-16335

FOR PIPE & ROUTING - SEE DRAWINGS H-16131 (E41); H-16132 (E41); H-16133 (E41) & H-16134 (E41)

NOTES:

1. CHEMICAL CLEANING CONNECTIONS, VALVES, ETC. IF REQUIRED ARE TO BE PROVIDED AS NECESSARY.
2. LINE TO SLOPE DOWN FROM POINT OF CONNECTION TO MAIN STEAM LINE TO THE DRAIN POT AHEAD OF THE TURBINE WITH NO POCKETS (D-5). LOCATE DRAIN POT AND VALVE F001 AS CLOSE AS POSSIBLE TO TURBINE INLET (F-13).
4. INSTRUMENT LINE VALVING MUST COMPLY WITH REF 11.
5. DELETED
6. HIGH POINT VENTS & DRAINS TO BE ADDED AS NECESSARY
7. EQUIPMENT & INSTRUMENTS ARE PREFIXED BY SYSTEM NO. (E41) UNLESS OTHERWISE NOTED.
8. LOCATE VALVE F041 (ZONE E-9) AS CLOSE AS POSSIBLE TO PUMP SUCTION LINE FROM CONDENSATE STORAGE.
9. FOR INTERLOCKING REQUIREMENTS SEE FUNCTIONAL CONTROL DIAGRAM REF. 4.
10. PENETRATION LOCATION TO BE ABOVE MAXIMUM EXPECTED WATER LEVEL, WITH PIPING EXTENDED 4 FT. BELOW LOW WATER LEVEL (K-3).
11. PENETRATION LOCATION TO BE MAXIMUM 3 FT. ABOVE NORMAL WATER LEVEL, WITH PIPING EXTENDED 4 FT. BELOW LOW WATER LEVEL (K-3).
12. THE BAROMETRIC CONDENSER AND VACUUM TANK SHALL BE LOCATED SO THAT ITS WATER LEVEL IS BELOW THE BOTTOM OF THE TURBINE EXHAUST.
13. "AC" POWER FOR HPC1 INSTRUMENTS SHALL BE DERIVED FROM THE PLANT "DC" POWER SYSTEM, VIA AN INVERTER. THE "DC" SOURCE IS TO BE SEPARATE FROM THAT WHICH SUPPLIES THE RCIC SYSTEM.

NOTES CONT'D ON SH. 2

BOUNDARY DIAGRAM NO.:1L36-B01-05
FUNCTION(S) NO.: L36-02
PREPARED BY: M. D. Stephens
DATE: 06/11/98
REVIEWED BY: Willie J. Jennings
DATE: 07/09/98

BOUNDARY DIAGRAM NO.:1B21-B02-13
FUNCTION(S) NO.: 1B21-02, C61-01
PREPARED BY: Willie J. Jennings
DATE: 04/22/98
REVIEWED BY: William P. Evans
DATE: 05/28/98

BOUNDARY DIAGRAM NO.:1E41-B01-01
FUNCTION(S) NO.: 1E41-01, 1C61-01 1T48-04
PREPARED BY: Wayne Lunceford
DATE: 05/08/98
REVIEWED BY: William P. Evans
DATE: 05/08/98

BOUNDARY DIAGRAM NO.:1P11-B01-02
FUNCTION(S) NO.: 1P11-01, 1E41-01, 1E51-01
PREPARED BY: William P. Evans
DATE: 02/24/98
REVIEWED BY: Bo Rosberg
DATE: 02/27/98

BOUNDARY DIAGRAM NO.:1E11-B01-14
FUNCTION(S) NO.: 1E11-01
PREPARED BY: Willie Jennings
DATE: 03/13/98
REVIEWED BY: William P. Evans
DATE: 04/16/98

LICENSE RENEWAL DOCUMENT

MPL NO.E41-1010 | ACAD14 | HL16332

SOUTHERN COMPANY

LICENSE RENEWAL SCREENING FOR INFORMATION ONLY

Revision: A | Date: 1-7-2000

APPROVED. ISSUED PER ILICENSE RENEWAL BOUNDARY PACKAGES. DRAWING CREATED FROM H-16332, REV.49; BY TRM.

EDWIN I. HATCH NUCLEAR PLANT UNIT No.1
HPCI SYSTEM P & ID
SHEET NO.1

BY	CHK'D	APPR.1
TRM	RLM	ASK

DRAWN	DESIGNED	LOCATION	DOCUMENT NUMBER	REVISION
TRM	LCF	10-502	HL-16332	A
DATE	SCALE: None			