HL-16276

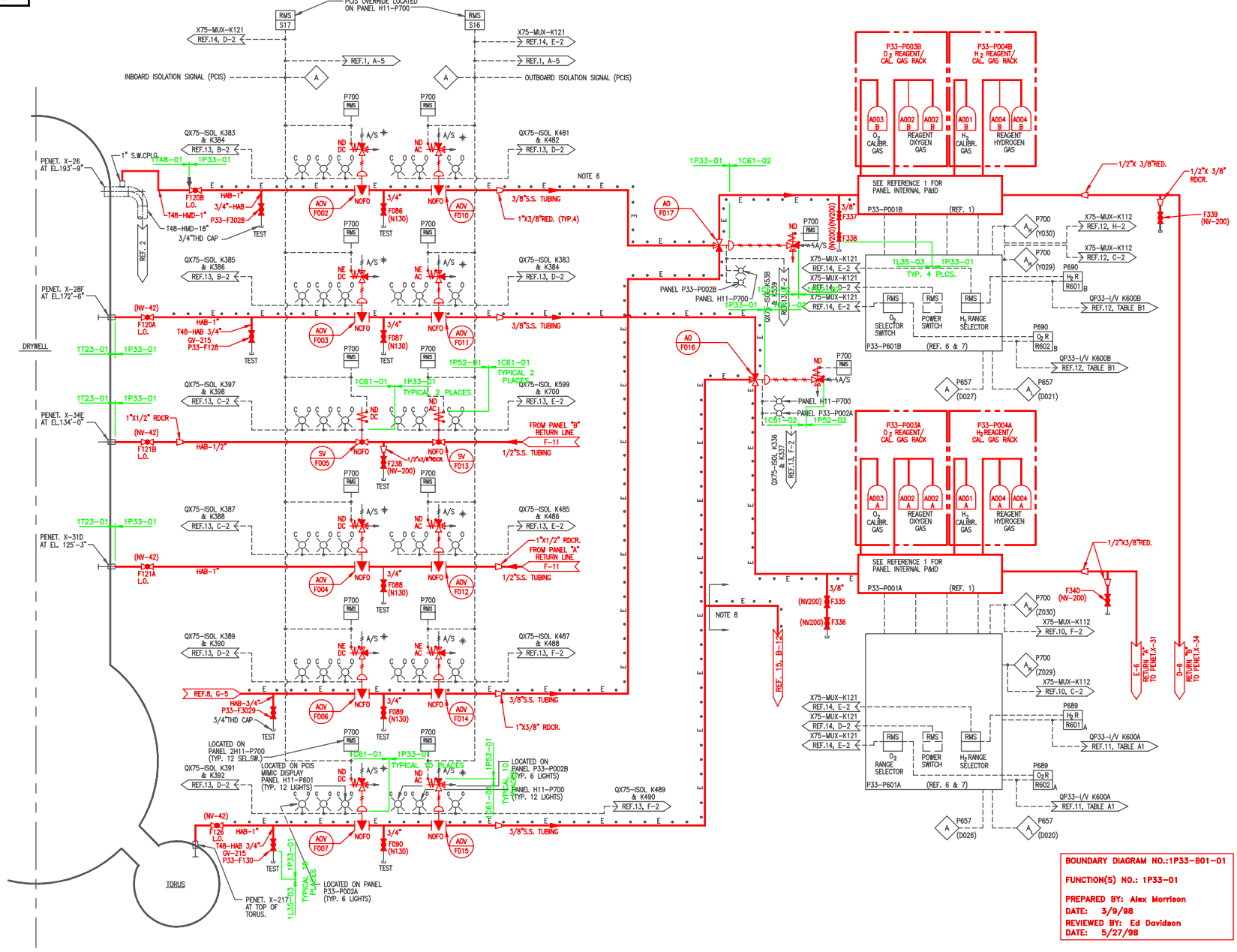

NOTES

1. ALL EQUIPMENT & INSTRUMENT NUMBERS ARE TO BE PRECEDED BY MPL. P33 UNLESS OTHERWISE NOTED. EXAMPLE: P33-P001A.
2. FOR INTERNAL DETAILS OF VENDOR-SUPPLIED PANELS P33-P001A & B SEE REFERENCE 1.
3. FOR INTERNAL DETAILS OF VENDOR-SUPPLIED PANELS P33-P601A & B SEE REFERENCE 6.
4. ROUTING OF THESE GAS SAMPLE LINES IS AS SHOWN ON REFERENCES 2, 3, 4, & 5.
5. (DELETED)
6. ==E== DENOTES THAT THE PIPE OR TUBING IS ELECTRICALLY HEAT TRACED.
7. DIGITAL SIGNALS: "ANALYZER IN HIGH OR LOW RANGE", DRY CONTACT INPUT TO RECORDER. RECORDER TO SUPPLY 0-100 mV SOURCE.
8. THIS LINE HEAT TRACED AND INSULATED WITH 1" OF FIBERGLASS INSULATION TO MAINTAIN A TEMP. OF 110 °F.

REFERENCES

REFERENCE	MPL. NO.	S.S. NO.
1. H_2O_2 ANALYZER SYSTEM P&ID FOR PANEL NOS. P33-P001A & B	P33-1010	H-16280
2. SAMPLE LINE ROUTINGS REACTOR BLDG. BELOW EL. 130'-0"		H-16553
3. SAMPLE LINE ROUTINGS REACTOR BLDG. EL. 130'-0".		H-16554
4. SAMPLE LINE ROUTINGS REACTOR BLDG. EL. 158'-0" & RADWASTE BLDG. EL. 164'-0"		H-16556
5. SAMPLE LINE ROUTINGS REACTOR BLDG. EL. 185'-0"		H-16557
6. DELPHI INDUSTRIES REMOTE CONTROL PANEL LAYOUT DRAWING	P33-P601A,B	SX-19180
7. ARRANGEMENT & EQUIPMENT FOR LOCAL PANELS P33-P002A&B & MAIN CONTROL ROOM PANELS P33-P600A&B		H-16166
8. PRIMARY CONTAINMENT PURGE & INERTING SYSTEM	T48-1020	H-16024
9. K-IV PANEL LAYOUT	P33-P001A,B	SX-19181
10. ANNUNCIATOR SIGNALS TO TSC I.E.D.	X75-1010	H-16402
11. CLASS IE DIVISION 1 ANALOG SIGNAL CONVERSION/ISOLATION SYSTEM I.E.D.	X75-1010	H-16395
12. CLASS IE DIVISION 2 ANALOG SIGNAL CONVERSION/ISOLATION SYSTEM I.E.D.	X75-1010	H-16396
13. DIGITAL INPUT SIGNALS TO THE ERF COMPUTER SYSTEM SHT. 7 OF 15	X75-1010	H-16409
14. DIGITAL INPUT SIGNAL TO THE ERF COMPUTER SYSTEM SHT. 15 OF 15	X75-1010	H-16417
15. FISSON PRODUCTS MONITORING SYSTEM P & ID SHT. 1		H-16173

LICENSE RENEWAL DOCUMENT

BOUNDARY DIAGRAM NO.:1P33-B01-01

FUNCTION(S) NO.: 1P33-01

PREPARED BY: Alex Morrison
DATE: 3/9/98
REVIEWED BY: Ed Davidson
DATE: 5/27/98

Revision: A | Date: 01/04/00

APPROVED. ISSUED PER LICENSE RENEWAL BOUNDARY PACKAGES. DRAWING CREATED FROM H-16276, REV.25; BY TRM

BY	CHK'D	APPR.
TRM	ED	ASK

MPL NO. P33-1010 | ACAD14 | HL16276

SOUTHERN COMPANY

LICENSE RENEWAL SCREENING FOR INFORMATION ONLY

EDWIN I. HATCH NUCLEAR PLANT UNIT No.1
PRIMARY CONTAINMENT ATMOSPHERE
H & O ANALYZER SYSTEM P&ID SH.1

DRAWN	DESIGNED	LOCATION	DOCUMENT NUMBER	REVISION
TRM	LCF	10-502	HL-16276	A
DATE	SCALE			
	None			