HL-16174

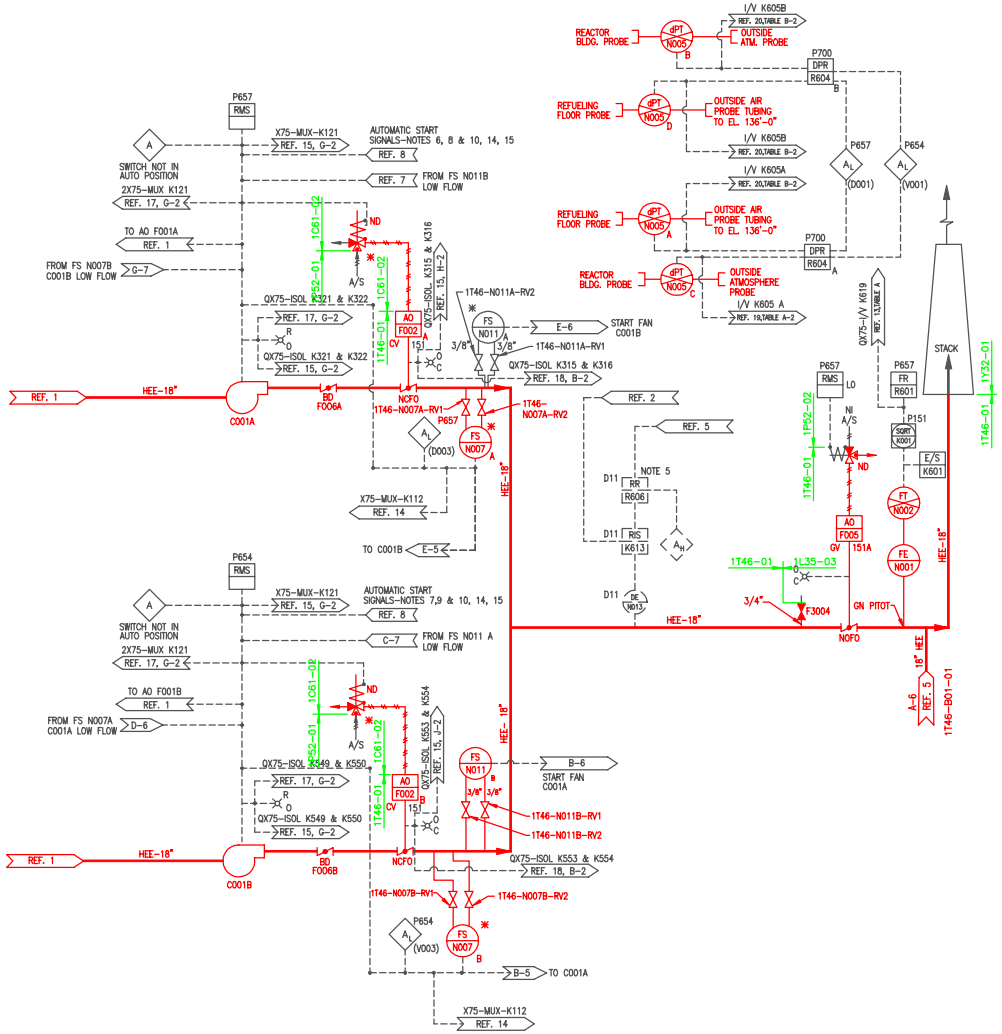

NOTES

FOR NOTES AND REFERENCES NOT SHOWN SEE DWG. H-16020.

REFERENCES	M.P.L. NO.	S.S.I NO.
1-STANDBY GAS TREATMENT SYSTEM PROCESS FLOW AND P. & I.D. SHEET NO. 1	T46-1010	H-16020

BOUNDARY DIAGRAM NO.:1T46-B01-02

FUNCTION(S) NO.: 1T46-01, 1C61-02

PREPARED BY: Alex Morrison
DATE: 3/16/98
REVIEWED BY: Ed Davidson
DATE: 4/30/98

Revision: A | Date: 12-06-99

APPROVED. ISSUED PER LICENSE RENEWAL BOUNDARY PACKAGES. DRAWING CREATED FROM H-16174, REV. 17; BY TRM.

BY	DWN	APPR
TRM	EPD	ASK

LICENSE RENEWAL DOCUMENT

MPL NO. T46-1010

ACAD14 | HL16174

SOUTHERN COMPANY

LICENSE RENEWAL SCREENING FOR INFORMATION ONLY

EDWIN I. HATCH NUCLEAR PLANT UNIT No. 1
STANDBY GAS TREATMENT SYSTEM
P. & I.D. - SH. NO. 2

DRAWN	DESIGNED	LOCATION	DOCUMENT NUMBER	REVISION
TRM	LCF	10-502	HL-16174	A
DATE	SCALE			
	None			