HL-16153

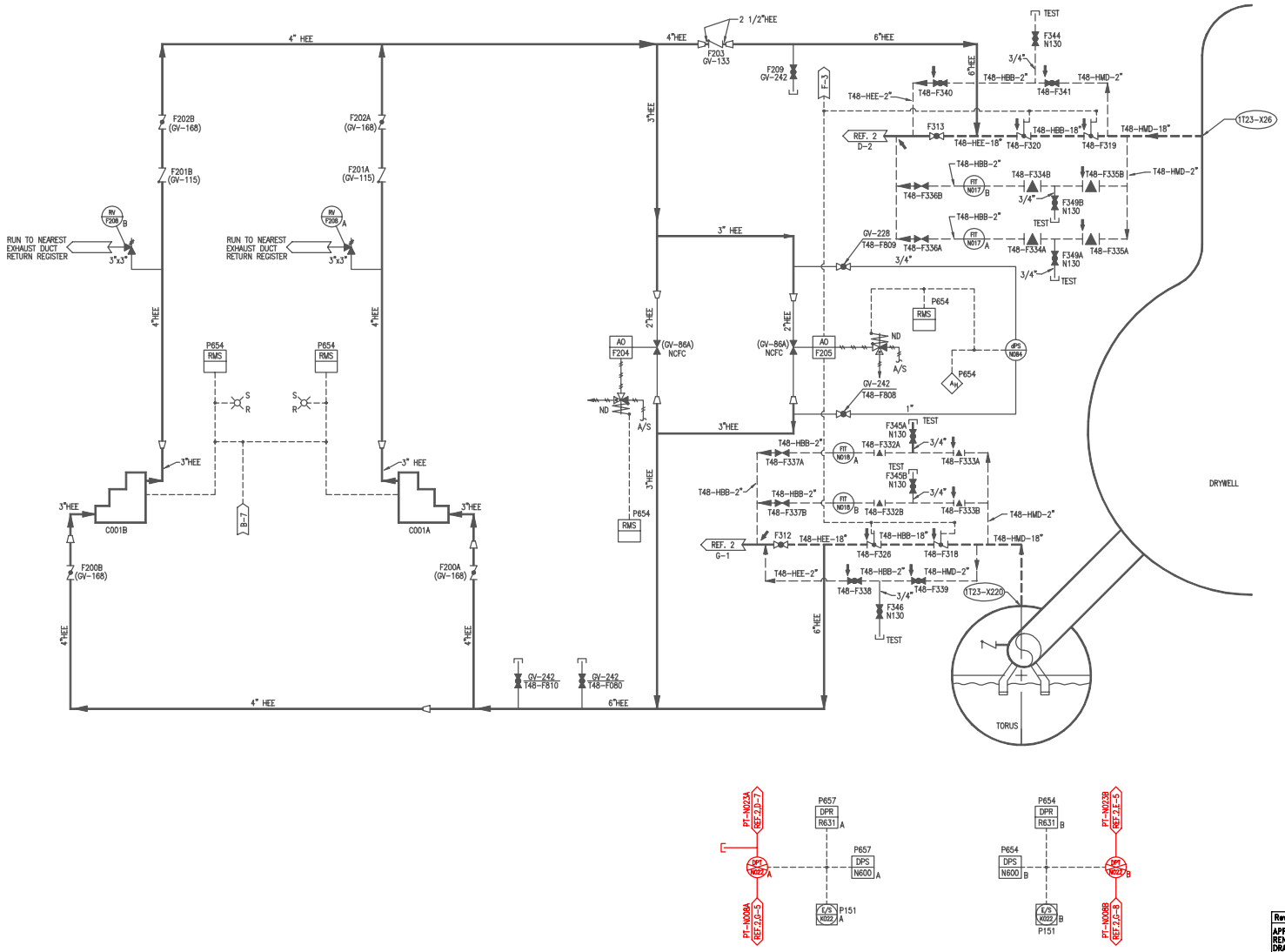

NOTES

1. ALL EQUIPMENT AND INSTRUMENT NOS. ON THIS DRAWING PRECEDED BY T48; EXAMPLE T48-B002.

REFERENCES

REFERENCE	MPL NO.	DWG. NO.
1. REACTOR BLDG. CLOSED COOLING WATER SYSTEM P. & I.D.	P42-1010	H-16009
2. PRIMARY CONTAINMENT PURGE & INERTING SYSTEM P. & I.D.	T48-1020	H-16024
3. PRIMARY CONTAINMENT ISOLATION SYSTEM	C61-1040	H-17801 THRU H-17805

BOUNDARY DIAGRAM NO.:1T48-B01-03

FUNCTION(S) NO.: 1T48-04

PREPARED BY: ED DAVIDSON
DATE: 4/27/98
REVIEWED BY: ALEX MORRISON
DATE: 4/27/98

LICENSE RENEWAL DOCUMENT

MPL NO. T48-1030 | ACAD14 | HL16153

SOUTHERN COMPANY

LICENSE RENEWAL SCREENING FOR INFORMATION ONLY

EDWIN I. HATCH NUCLEAR PLANT UNIT No. 1
DRYWELL TO TORUS DIFFERENTIAL PRESSURE SYSTEM P. & I.D.

DRAWN	DESIGNED	LOCATION	DOCUMENT NUMBER	REVISION
TRM	LCF	10-502	HL-16153	A
DATE	SCALE			
	None			

Revision: A | Date: 1-5-2000

APPROVED. ISSUED PER LICENSE RENEWAL BOUNDARY PACKAGES. DRAWING CREATED FROM H-16153, REV. 13; BY TRM.

BY	CHK'D	APPR'D
TRM	ED	ASK