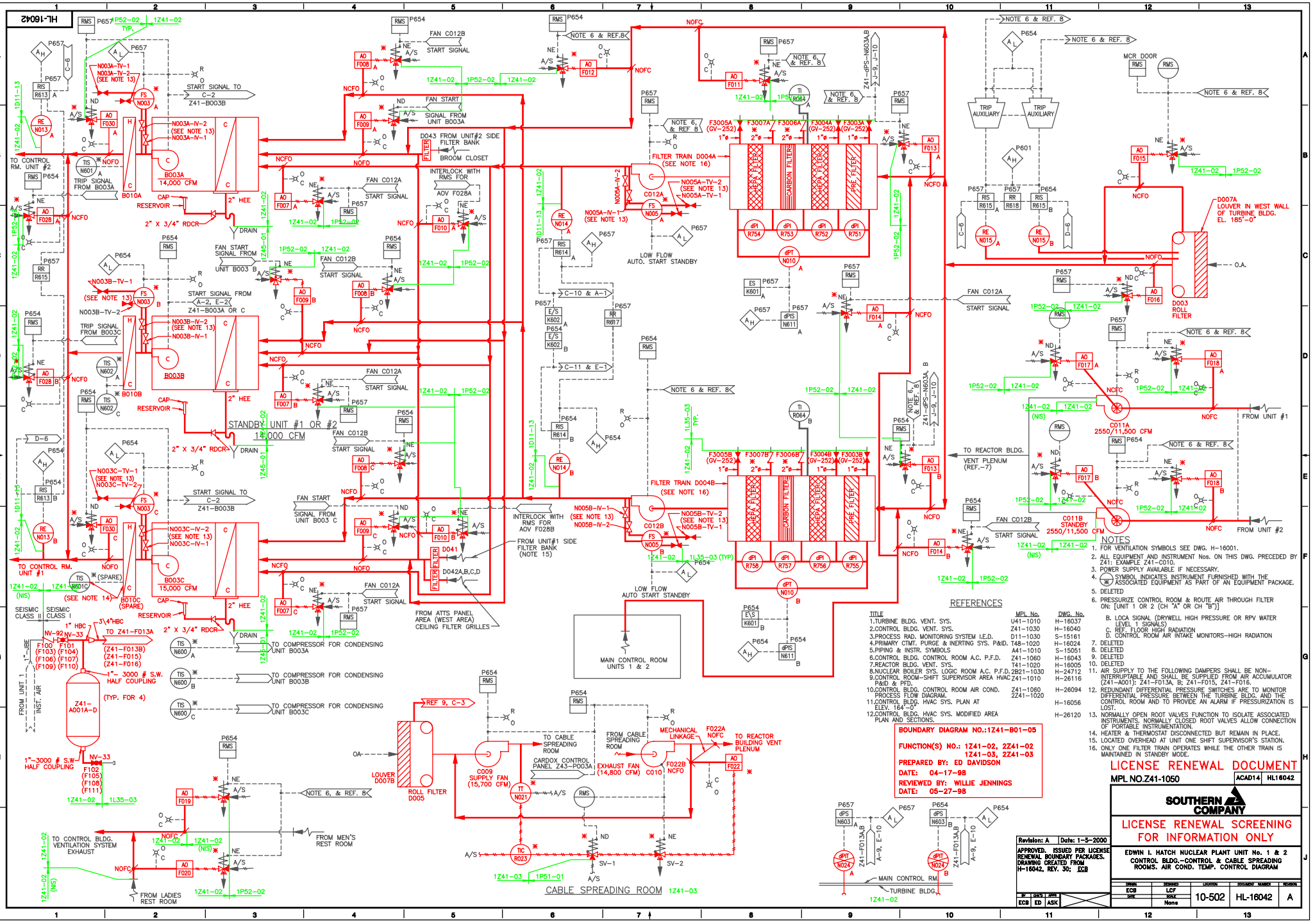
HL-16042
B003A
14,000 CFM
B003B
STANDBY UNIT #1 OR #2
14,000 CFM
B003C
15,000 CFM
FILTER TRAIN D004A
(SEE NOTE 16)
FILTER TRAIN D004B
(SEE NOTE 16)
HEPA FILTER
CARBON FILTER
PRE FILTER
C011A
2550/11,500 CFM
C011B
STANDBY
2550/11,500 CFM
D003
ROLL
FILTER
D007A
LOUVER IN WEST WALL
OF TURBINE BLDG.
EL. 185'-0"
MAIN CONTROL ROOM
UNITS 1 & 2
CABLE SPREADING ROOM 1Z41-03
C009
SUPPLY FAN
(15,700 CFM)
C010
EXHAUST FAN
(14,800 CFM)
D005
ROLL FILTER
LOUVER
D007B
TO REACTOR BLDG.
VENT PLENUM
(REF.-7)
TO REACTOR
BUILDING VENT
PLENUM
TO CONTROL RM.
UNIT #1
TO CONTROL
RM. UNIT #2
TO CONTROL BLDG.
VENTILATION SYSTEM
EXHAUST
FROM LADIES
REST ROOM
FROM MEN'S
REST ROOM
FROM UNIT #1
FROM UNIT #2
FROM ATTS PANEL
AREA (WEST AREA)
CEILING FILTER GRILLES
FROM UNIT#1 SIDE
FILTER BANK
(NOTE 15)
D043 FROM UNIT#2 SIDE
FILTER BANK
BROOM CLOSET
TO COMPRESSOR FOR CONDENSING
UNIT B003A
TO COMPRESSOR FOR CONDENSING
UNIT B003B
TO COMPRESSOR FOR CONDENSING
UNIT B003C
TO CABLE
SPREADING
ROOM
FROM CABLE
SPREADING
ROOM
CARDOX CONTROL
PANEL Z43-P003A
MECHANICAL
LINKAGE
F022A
NOFC
F022B
NCFO
LOW FLOW
AUTO. START STANDBY
LOW FLOW
AUTO START STANDBY
MAIN CONTROL RM.
TURBINE BLDG.
1Z41-02
SEISMIC
CLASS II
SEISMIC
CLASS I
FROM UNIT 1
INST. AIR
Z41-
A001A-D
(TYP. FOR 4)
1"-3000 # S.W.
HALF COUPLING
TO Z41-F013A
(Z41-F013B)
(Z41-F015)
(Z41-F016)
F100
(F103) (F104)
(F106) (F107)
(F109) (F110)
F101
F102
(F105)
(F108)
(F111)
NV-92
NV-33
1"-HBC
3/4"HBC
1"-IBE
TO COMPRESSOR FOR CONDENSING
UNIT B003B
TO COMPRESSOR FOR CONDENSING
UNIT B003C
REF 9, C-3
OA
NOTES
1. FOR VENTILATION SYMBOLS SEE DWG. H-16001.
2. ALL EQUIPMENT AND INSTRUMENT Nos. ON THIS DWG. PRECEDED BY Z41: EXAMPLE Z41-C010.
3. POWER SUPPLY AVAILABLE IF NECESSARY.
4. (X) SYMBOL INDICATES INSTRUMENT FURNISHED WITH THE ASSOCIATED EQUIPMENT AS PART OF AN EQUIPMENT PACKAGE.
5. DELETED
6. PRESSURIZE CONTROL ROOM & ROUTE AIR THROUGH FILTER ON: [UNIT 1 OR 2 (CH "A" OR CH "B")]
B. LOCA SIGNAL (DRYWELL HIGH PRESSURE OR RPV WATER LEVEL 1 SIGNALS)
C. REF. FLOOR HIGH RADIATION
D. CONTROL ROOM AIR INTAKE MONITORS–HIGH RADIATION
7. DELETED
8. DELETED
9. DELETED
10. DELETED
11. AIR SUPPLY TO THE FOLLOWING DAMPERS SHALL BE NON-INTERRUPTABLE AND SHALL BE SUPPLIED FROM AIR ACCUMULATOR (Z41–A001): Z41–F013A, B; Z41–F015, Z41–F016.
12. REDUNDANT DIFFERENTIAL PRESSURE SWITCHES ARE TO MONITOR DIFFERENTIAL PRESSURE BETWEEN THE TURBINE BLDG. AND THE CONTROL ROOM AND TO PROVIDE AN ALARM IF PRESSURIZATION IS LOST.
13. NORMALLY OPEN ROOT VALVES FUNCTION TO ISOLATE ASSOCIATED INSTRUMENTS. NORMALLY CLOSED ROOT VALVES ALLOW CONNECTION OF PORTABLE INSTRUMENTATION.
14. HEATER & THERMOSTAT DISCONNECTED BUT REMAIN IN PLACE.
15. LOCATED OVERHEAD AT UNIT ONE SHIFT SUPERVISOR'S STATION.
16. ONLY ONE FILTER TRAIN OPERATES WHILE THE OTHER TRAIN IS MAINTAINED IN STANDBY MODE.
REFERENCES
TITLE | MPL No. | DWG. No.
1.TURBINE BLDG. VENT. SYS. | U41–1010 | H–16037
2.CONTROL BLDG. VENT. SYS. | Z41–1030 | H–16040
3.PROCESS RAD. MONITORING SYSTEM I.E.D. | D11–1030 | S–15161
4.PRIMARY CTMT. PURGE & INERTING SYS. P&ID. | T48–1020 | H–16024
5.PIPING & INSTR. SYMBOLS | A41–1010 | S–15051
6.CONTROL BLDG. CONTROL ROOM A.C. P.F.D. | Z41–1060 | H–16043
7.REACTOR BLDG. VENT. SYS. | T41–1020 | H–16005
8.NUCLEAR BOILER SYS. LOGIC ROOM A.C. P.F.D. | 2B21–1030 | H–24712
9.CONTROL ROOM–SHIFT SUPERVISOR AREA HVAC P&ID & PFD. | Z41–1010 | H–26116
10.CONTROL BLDG. CONTROL ROOM AIR COND. PROCESS FLOW DIAGRAM. | Z41–1060 | H–26094
11.CONTROL BLDG. HVAC SYS. PLAN AT ELEV. 164'–0" | 2Z41–1020 | H–16056
12.CONTROL BLDG. HVAC SYS. MODIFIED AREA PLAN AND SECTIONS. | | H–26120
BOUNDARY DIAGRAM NO.:1Z41–B01–05
FUNCTION(S) NO.: 1Z41–02, 2Z41–02
1Z41–03, 2Z41–03
PREPARED BY: ED DAVIDSON
DATE: 04–17–98
REVIEWED BY: WILLIE JENNINGS
DATE: 05–27–98
LICENSE RENEWAL DOCUMENT
MPL NO.Z41-1050
ACAD14
HL16042
SOUTHERN COMPANY
LICENSE RENEWAL SCREENING
FOR INFORMATION ONLY
Revision: A
Date: 1-5-2000
APPROVED. ISSUED PER LICENSE RENEWAL BOUNDARY PACKAGES. DRAWING CREATED FROM H-16042, REV. 30; ECB
EDWIN I. HATCH NUCLEAR PLANT UNIT No. 1 & 2
CONTROL BLDG.–CONTROL & CABLE SPREADING ROOMS. AIR COND. TEMP. CONTROL DIAGRAM
DRAWN ECB
DESIGNED LCF
SCALE None
LOCATION 10-502
DOCUMENT NUMBER HL-16042
REVISION A
BY ECB
DWN ED
APPR ASK