HL-16023

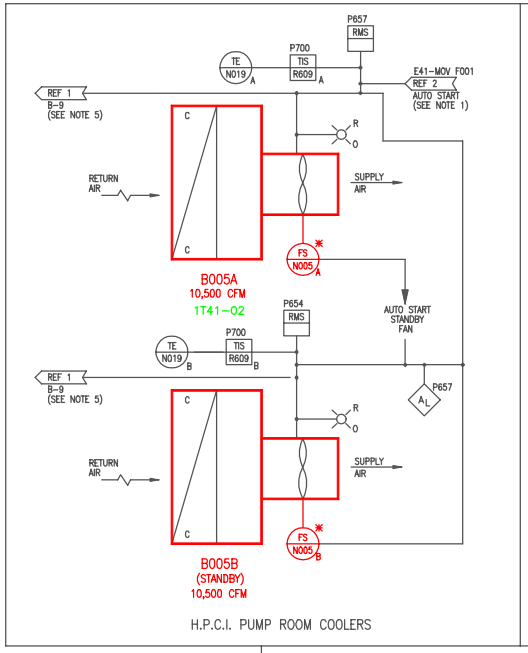

H.P.C.I. PUMP ROOM COOLERS

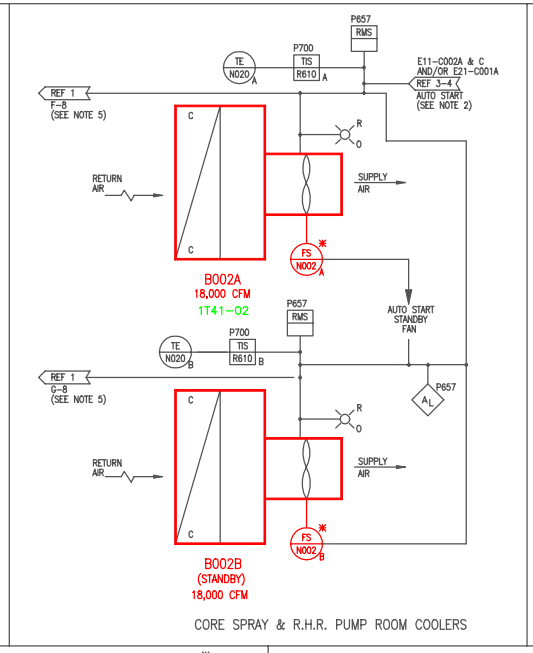

CORE SPRAY & R.H.R. PUMP ROOM COOLERS

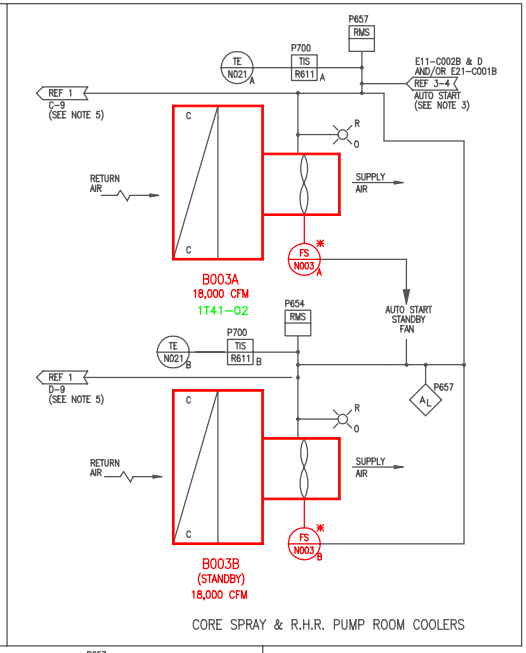

CORE SPRAY & R.H.R. PUMP ROOM COOLERS

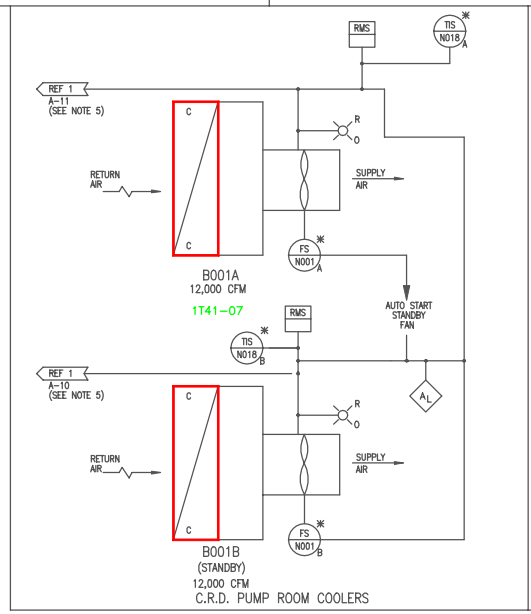

C.R.D. PUMP ROOM COOLERS

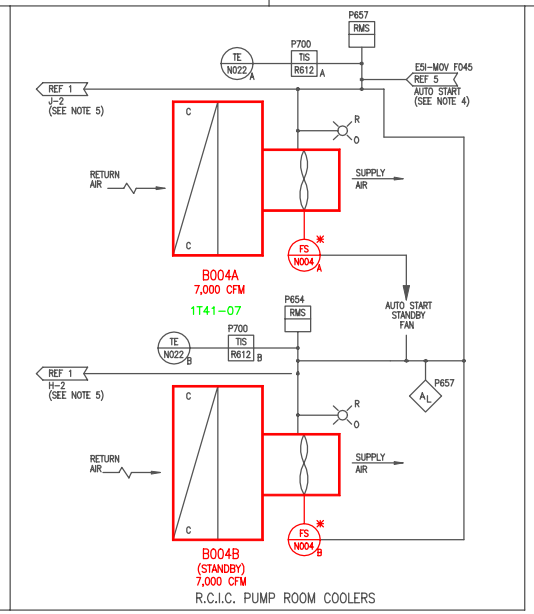

R.C.I.C. PUMP ROOM COOLERS

NOTES

1. AUTOMATIC START SIGNAL FROM VALVE CONTACT E41-F001
2. AUTOMATIC START SIGNAL FROM PUMPS STARTER CIRCUIT E11-C002A, C AND/OR E21-C001A.
3. AUTOMATIC START SIGNAL FROM PUMPS STARTER CIRCUIT E11-C002B, D AND/OR E21-C001B.
4. AUTOMATIC START SIGNAL FROM VALVE CONTACT E51-F045.
5. DE-ENERGIZE SOLENOID VALVE ON RESPECTIVE FAN OPERATION TO OPEN AIR OPERATED VALVE.
6. ALL EQUIPMENT AND INSTRUMENT NO.S ON THIS DWG PRECEDED BY T41; EXAMPLE T41-B003A.

REFERENCES

REFERENCES	MPL No.	SS No.
1. REACTOR BUILDING PLANT SERVICE WATER SYSTEM P. & I.D.	P41-1010	H-16011
2. F.C.D. H.P.C.I. SYSTEM	E41-1030	H-19950
3. F.C.D. R.H.R. SYSTEM	E11-1030	H-19937
4. F.C.D. CORE SPRAY SYSTEM	E21-1030	H-19944
5. F.C.D. R.C.I.C. SYSTEM	E51-1030	H-19956
6. PIPING & INSTRUMENT SYMBOLS	A41-1010	S-15051

BOUNDARY DIAGRAM NO.:1T41-B02-01
FUNCTION(S) NO.: 1T41-02, 1T41-07
PREPARED BY: ED DAVIDSON
DATE: 4/6/98
REVIEWED BY: ALEX MORRISON
DATE: 5/4/98

LICENSE RENEWAL DOCUMENT

MPL T41-1030 | ACAD14 | HL16023

SOUTHERN COMPANY

LICENSE RENEWAL SCREENING FOR INFORMATION ONLY

EDWIN I. HATCH NUCLEAR PLANT UNIT No. 1
SAFEGUARD EQUIPMENT COOLING
P. & I.D.

DRAWN	DESIGNED	LOCATION	DOCUMENT NUMBER	REVISION
TRM	LCF	10-502	HL-16023	A
DATE	SCALE None			

Revision: A | Date: 12-30-99

APPROVED. ISSUED PER LICENSE RENEWAL BOUNDARY PACKAGES. DRAWING CREATED FROM H-16023, REV.9; BY TRM.

BY	CHK'D	APPR'D
TRM	EPD	ASK