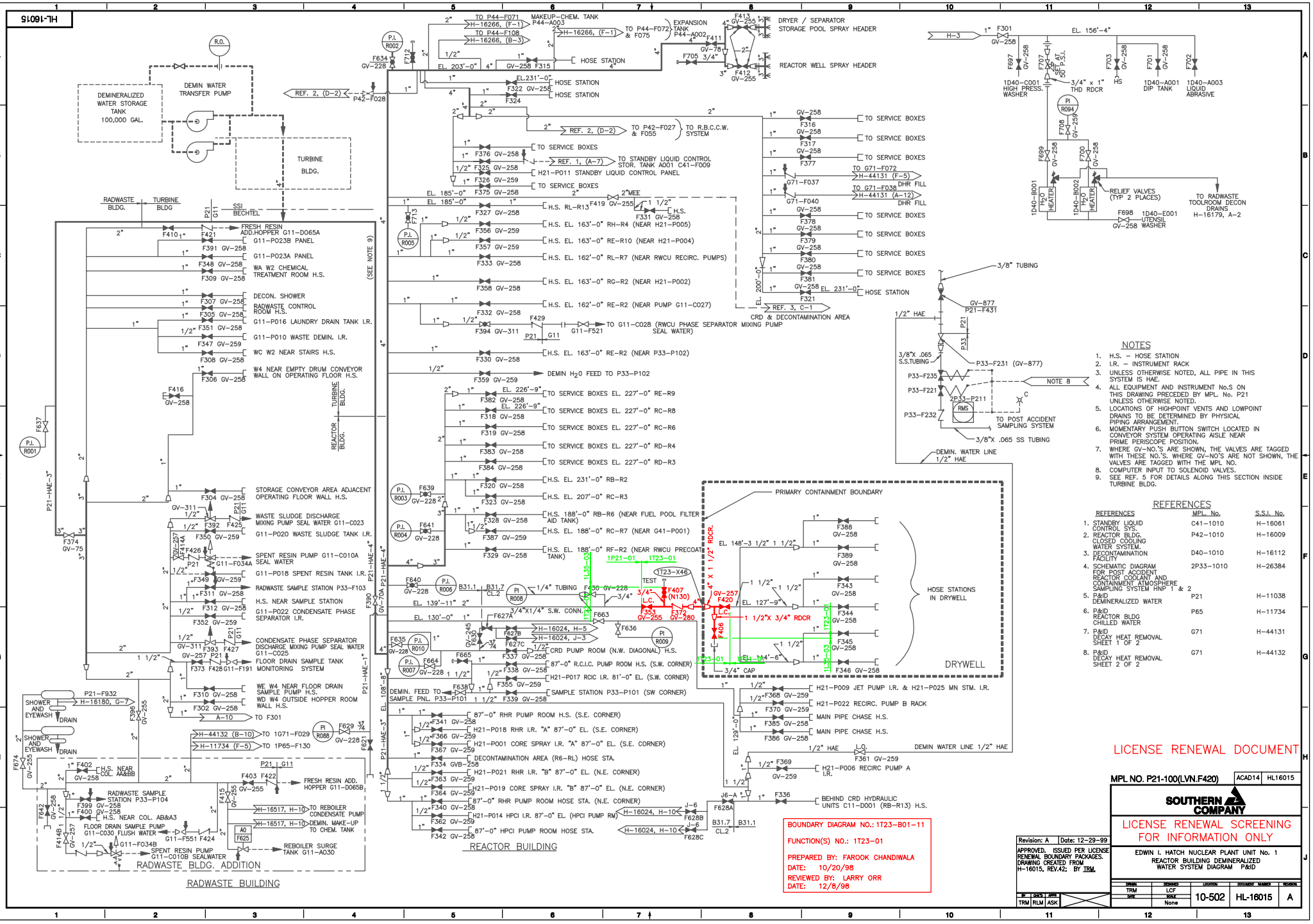

NOTES

1. H.S. – HOSE STATION
2. I.R. – INSTRUMENT RACK
3. UNLESS OTHERWISE NOTED, ALL PIPE IN THIS SYSTEM IS HAE.
4. ALL EQUIPMENT AND INSTRUMENT No.S ON THIS DRAWING PRECEDED BY MPL. No. P21 UNLESS OTHERWISE NOTED.
5. LOCATIONS OF HIGHPOINT VENTS AND LOWPOINT DRAINS TO BE DETERMINED BY PHYSICAL PIPING ARRANGEMENT.
6. MOMENTARY PUSH BUTTON SWITCH LOCATED IN CONVEYOR SYSTEM OPERATING AISLE NEAR PRIME PERISCOPE POSITION.
7. WHERE GV–NO.'S ARE SHOWN, THE VALVES ARE TAGGED WITH THESE NO.'S. WHERE GV–NO'S ARE NOT SHOWN, THE VALVES ARE TAGGED WITH THE MPL NO.
8. COMPUTER INPUT TO SOLENOID VALVES.
9. SEE REF. 5 FOR DETAILS ALONG THIS SECTION INSIDE TURBINE BLDG.

REFERENCES

REFERENCES	MPL. No.	S.S.I. No.
1. STANDBY LIQUID CONTROL SYS.	C41–1010	H–16061
2. REACTOR BLDG. CLOSED COOLING WATER SYSTEM.	P42–1010	H–16009
3. DECONTAMINATION FACILITY	D40–1010	H–16112
4. SCHEMATIC DIAGRAM FOR POST ACCIDENT REACTOR COOLANT AND CONTAINMENT ATMOSPHERE SAMPLING SYSTEM HNP 1 & 2	2P33–1010	H–26384
5. P&ID DEMINERALIZED WATER	P21	H–11038
6. P&ID REACTOR BLDG CHILLED WATER	P65	H–11734
7. P&ID DECAY HEAT REMOVAL SHEET 1 OF 2	G71	H–44131
8. P&ID DECAY HEAT REMOVAL SHEET 2 OF 2	G71	H–44132