HL-16011

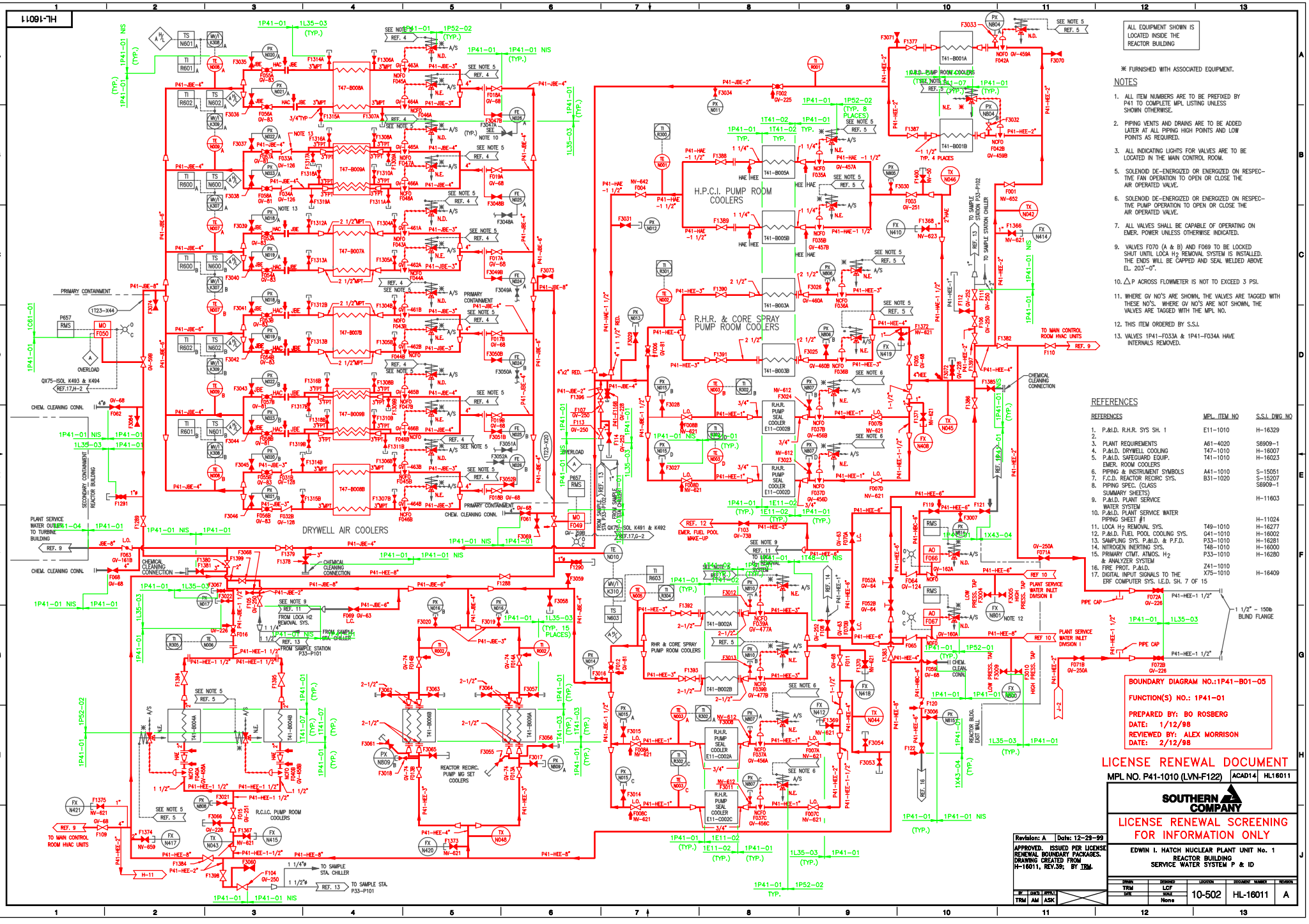

ALL EQUIPMENT SHOWN IS LOCATED INSIDE THE REACTOR BUILDING

✱ FURNISHED WITH ASSOCIATED EQUIPMENT.

NOTES

1. ALL ITEM NUMBERS ARE TO BE PREFIXED BY P41 TO COMPLETE MPL LISTING UNLESS SHOWN OTHERWISE.
2. PIPING VENTS AND DRAINS ARE TO BE ADDED LATER AT ALL PIPING HIGH POINTS AND LOW POINTS AS REQUIRED.
3. ALL INDICATING LIGHTS FOR VALVES ARE TO BE LOCATED IN THE MAIN CONTROL ROOM.
5. SOLENOID DE-ENERGIZED OR ENERGIZED ON RESPECTIVE FAN OPERATION TO OPEN OR CLOSE THE AIR OPERATED VALVE.
6. SOLENOID DE-ENERGIZED OR ENERGIZED ON RESPECTIVE PUMP OPERATION TO OPEN OR CLOSE THE AIR OPERATED VALVE.
7. ALL VALVES SHALL BE CAPABLE OF OPERATING ON EMER. POWER UNLESS OTHERWISE INDICATED.
9. VALVES F070 (A & B) AND F069 TO BE LOCKED SHUT UNTIL LOCA H_2 REMOVAL SYSTEM IS INSTALLED. THE ENDS WILL BE CAPPED AND SEAL WELDED ABOVE EL. 203'-0".
10. ΔP ACROSS FLOWMETER IS NOT TO EXCEED 3 PSI.
11. WHERE GV NO'S ARE SHOWN, THE VALVES ARE TAGGED WITH THESE NO'S. WHERE GV NO'S ARE NOT SHOWN, THE VALVES ARE TAGGED WITH THE MPL NO.
12. THIS ITEM ORDERED BY S.S.I.
13. VALVES 1P41-F033A & 1P41-F034A HAVE INTERNALS REMOVED.

REFERENCES

REFERENCES	MPL ITEM NO	S.S.I. DWG NO
1. P.&I.D. R.H.R. SYS SH. 1	E11-1010	H-16329
2.		
3. PLANT REQUIREMENTS	A61-4020	S6909-1
4. P.&I.D. DRYWELL COOLING	T47-1010	H-16007
5. P.&I.D. SAFEGUARD EQUIP. EMER. ROOM COOLERS	T41-1010	H-16023
6. PIPING & INSTRUMENT SYMBOLS	A41-1010	S-15051
7. F.C.D. REACTOR RECIRC SYS.	B31-1020	S-15207
8. PIPING SPEC. (CLASS SUMMARY SHEETS)		S6909-1
9. P.&I.D. PLANT SERVICE WATER SYSTEM		H-11603
10. P.&I.D. PLANT SERVICE WATER PIPING SHEET #1		H-11024
11. LOCA H_2 REMOVAL SYS.	T49-1010	H-16277
12. P.&I.D. FUEL POOL COOLING SYS.	G41-1010	H-16002
13. SAMPLING SYS. P.&I.D. & P.F.D.	P33-1010	H-16281
14. NITROGEN INERTING SYS.	T48-1010	H-16000
15. PRIMARY CTMT. ATMOS. H_2 & ANALYZER SYSTEM	P33-1010	H-16280
16. FIRE PROT. P.&I.D.	Z41-1010	
17. DIGITAL INPUT SIGNALS TO THE ERF COMPUTER SYS. I.E.D. SH. 7 OF 15	X75-1010	H-16409

BOUNDARY DIAGRAM NO.:1P41-B01-05

FUNCTION(S) NO.: 1P41-01

PREPARED BY: BO ROSBERG
DATE: 1/12/98
REVIEWED BY: ALEX MORRISON
DATE: 2/12/98

LICENSE RENEWAL DOCUMENT

MPL NO. P41-1010 (LVN-F122) | ACAD14 | HL16011

SOUTHERN COMPANY

LICENSE RENEWAL SCREENING FOR INFORMATION ONLY

EDWIN I. HATCH NUCLEAR PLANT UNIT No. 1
REACTOR BUILDING
SERVICE WATER SYSTEM P & ID

DRAWN	DESIGNED	LOCATION	DOCUMENT NUMBER	REVISION
TRM	LCF	10-502	HL-16011	A
DATE	SCALE			
	None			

Revision: A	Date: 12-29-99
APPROVED. ISSUED PER LICENSE RENEWAL BOUNDARY PACKAGES. DRAWING CREATED FROM H-16011, REV.39; BY TRM.	

BY	CHK'D	APPR'D
TRM	AM	ASK