HL-13648

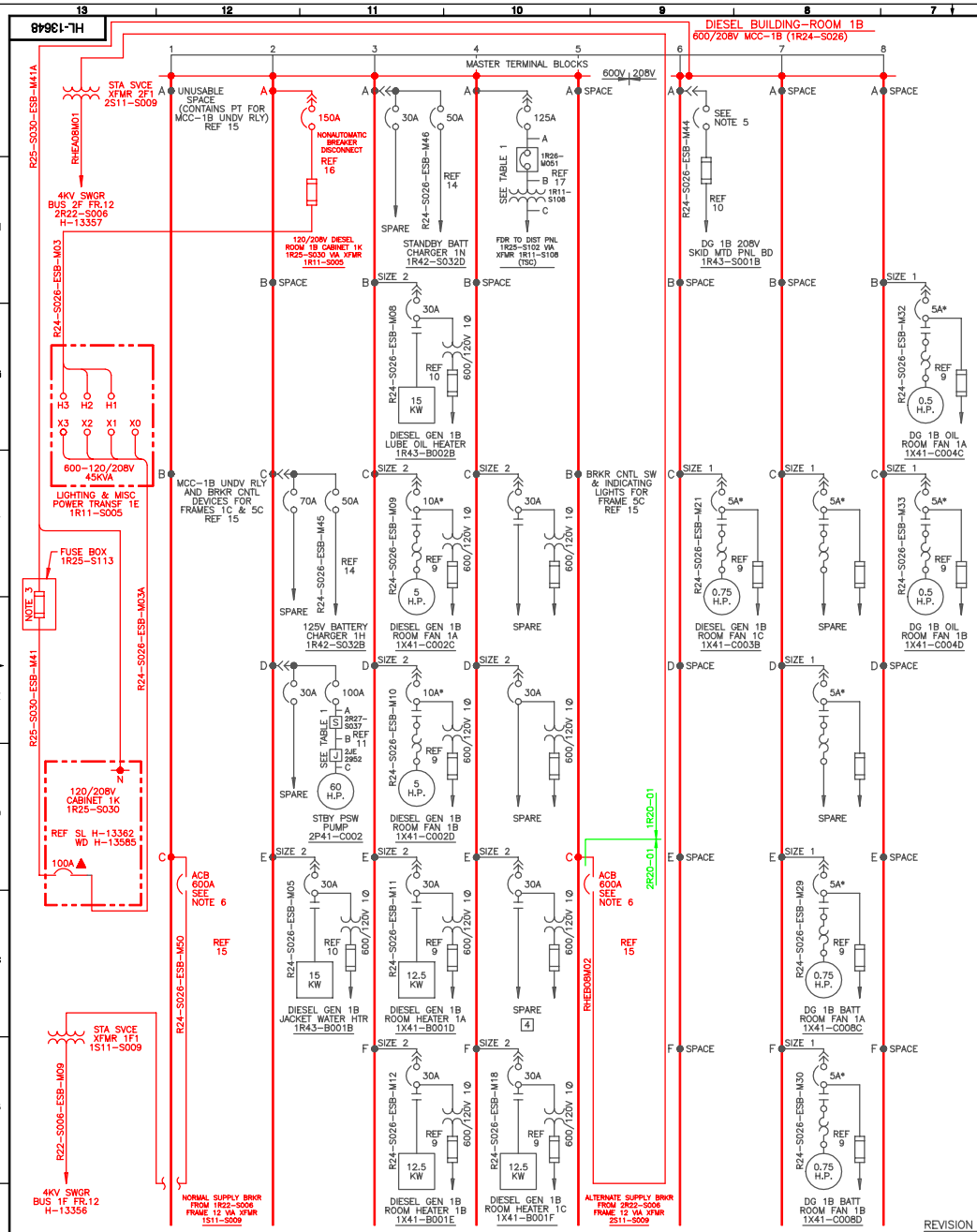


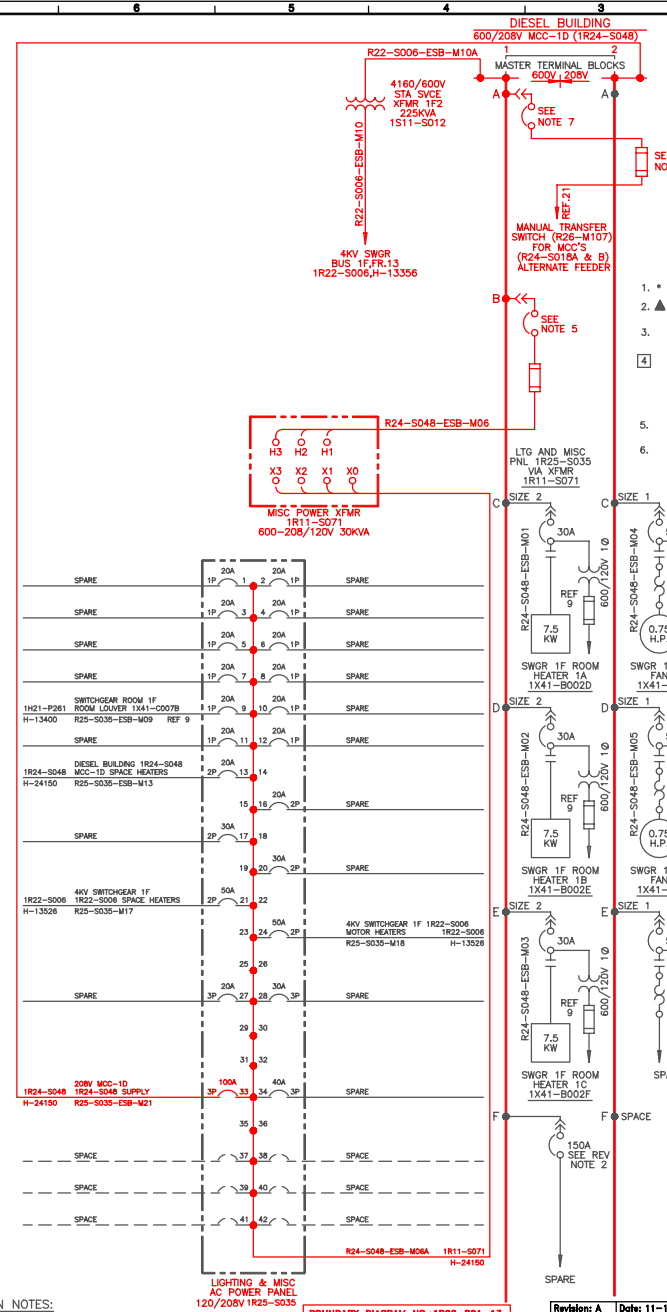


## LEGEND

DESTINATION MPL NO. | BREAKER FUNCTION | WIRE NO. (DC ONLY) | NO. OF POLES | BREAKER CONTINUOUS RATING | BREAKER NO.

R22-S001 | DIV. I CONDENSER FLOOD LOGIC | P1 | 2P | 20A | 1

H-13473 | R25-S001-ES7-M01 | REF 22

DESTINATION WIRING DIAGRAM | CABLE NO. | ELEMENTARY REFERENCE #

- ALL BREAKERS OR SPACES IN THE PANEL WILL BE ACCOUNTED FOR.
- BREAKERS WITH NO CABLES CONNECTED TO THEM WILL BE IDENTIFIED AS "SPARE".
- SPACES WITH NO BREAKER WILL BE IDENTIFIED WITH A DASHED LINE TO SIGNIFY AVAILABILITY FOR FUTURE USE AND IDENTIFIED AS "SPACE".
- EACH BREAKER SHOULD BE NUMBERED AND LOCATED ON THE VERTICAL BUS BASED ON THE NUMBER OF THE POLE POSITION ITS OPERATING LEVER OCCUPIES. (FOR 3 POLES THE LEVER IS ON THE MIDDLE POLE. FOR 2 POLES IT IS THE TOP POLE WHEN INSTALLED ON LEFT SIDE AND BOTTOM POLE WHEN INSTALLED ON RIGHT SIDE). POLE POSITION NUMBERS ARE KNOWN BY COUNTING EACH POLE LEFT TO RIGHT, TOP TO BOTTOM.

## NOTES:

1. * CONTINUOUS RATING FOR MAGNETIC BREAKER WITH ADJUSTABLE INSTANTANEOUS TRIP RANGE.
2. ▲ REPLACED 100A EH FRAME CIRCUIT BREAKER WITH 100A EH FRAME MOLDED CASE SWITCH (NON-AUTOMATIC).
3. REFER TO THE MASTER FUSE LIST FOR FUSE DESIGN INFORMATION.
4. BEFORE USING THESE FRAMES, VERIFY EQUIPMENT STATUS. SOME COMPONENTS MAY NEED REPAIR AND/OR REPLACEMENT. IF A FRAME IS REFURBISHED TO FULLY OPERATIONAL CAPABILITY, A WCN OR ABN SHOULD DOCUMENT THE CHANGE OF STATUS.
   REF: MWO #1-91-7102 (1R24-S026 FR. 4E)
5. REPLACED 100A F FRAME CIRCUIT BREAKER WITH 150A F FRAME MOLDED CASE SWITCH (NON-AUTOMATIC BREAKER)
6. DEFEATED PROTECTIVE TRIP FUNCTION FOR LA600 BREAKERS IN FRAMES 1 & 5.
7. INSTALL WESTINGHOUSE TYPE KD, CAT. NO. KD3400WK, 400 AMPS, 600V AC, MOLDED CASE SWITCH (NON-AUTOMATIC BREAKER) WITH ONE FACTORY INSTALLED "C" FORM AUXILIARY SWITCH.
8. INSTALL BUSSMANN FUSES AND ACTUATOR KAZ DEVICE (NOT SHOWN-SEE REF.5 FOR DETAILS) IN COMP. 2A (208 SECTION).

## REFERENCES:

| | |
|---|---|
| 1.B-13034 | FRONT VIEW DIESEL BUILDING 600/208V MCC-1B 1R24-S026 |
| 2.B-23019 | FRONT VIEW DIESEL BUILDING 600/208V MCC-1D 1R24-S048 |
| 3.B-23036 | EQUIPMENT LIST DIESEL BUILDING MCC-1D 1R24-S048 |
| 4.H-14153-H-14155 | WIRING DIAG DIESEL BUILDING 600/208V MCC-1B 1R24-S026 |
| 5.H-24150 | WIRING DIAG DIESEL BUILDING 600/208V MCC-1D 1R24-S048 |
| 6.S-13910-S-13911 | NAME PLATE LAYOUT DIESEL BUILDING MCC-1B 1R24-S026 |
| 7.S-13929-S-13944 | WIRING DIAGRAM CIRCUIT BREAKERS AND STARTERS |
| 8.SX-13149 | (VOID) |
| 9.H-13396 | ELEMENTARY DIAGRAM DIESEL GENERATOR 1B HEATING AND VENTILATION |
| 10.H-13584 | ELEMENTARY DIAGRAM DIESEL MISCELLANEOUS EQUIPMENT |
| 11.H-23779 | ELEMENTARY DIAGRAM DIESEL GENERATOR 2B |
| 12.B-13058 | EQUIPMENT LIST DIESEL BUILDING MCC-1B 1R24-S026 |
| 13.H-13585 | WIRING DIAGRAM 1R25-S035 |
| 14.H-13371 | SINGLE LINE DIAGRAM 125V DC EMERGENCY STATION SERVICE |
| 15.H-14239 | ELEMENTARY DIAGRAM DIESEL BUILDING 4160 AND 600V EMERGENCY STATION SERVICE FDR'S |
| 16.H-13362 | SINGLE LINE DIAGRAM DIESEL BUILDING STATION SERVICE MPL'S 1R25-S029, 1R25-S030 AND 1R25-S031 |
| 17.H-27055 | SINGLE LINE DIAGRAM TECHNICAL SUPPORT CENTER AND EMERGENCY OPERATING FACILITY |
| 18.A-10135 | LOAD LIST FOR 1R24-S026,MCC-1B |
| 19.A-10157 | LOAD LIST FOR 1R24-S048,MCC-1D |
| 20.A-10201 | LOAD LIST FOR 1R25-S035, LIGHTING AND MISCELLANEOUS AC POWER PANEL |
| 21.H-17876 H-17877 | ELEM. DIAG. MCC'S R24-S018A & B NORM. & ALT. FDRS. |

TABLE 1

| FRAME | CABLE A | CABLE B | CABLE C |
|---|---|---|---|
| 2DR | PUEB41M01 | PUEB41M02 | PUEB41M03 |
| 4A | XRXB01M01 | XRXB01M02 | XSX301M01 |

## REVISION NOTES:

1. DELETE
2. FIELD TO DISCONNECT CABLES R24-S048-ES3-M07 AND R24-S048-ES4-M08 FROM MCC R24-S048 AS PER REV.12. THE CABLES SHOULD BE SECURELY TAPED AND LEFT IN PLACE FOR POSSIBLE FUTURE USE.
3. DELETED

BOUNDARY DIAGRAM NO.:1R20-B01-13

FUNCTION(S) NO.: 1R20-01

PREPARED BY: Mark Crisler

DATE: 04/06/98

REVIEWED BY: Renee Ritchey

DATE: 04/20/98

Revision: A Date: 11-16-99

APPROVED. ISSUED PER LICENSE RENEWAL BOUNDARY PACKAGES. DRAWING CREATED FROM H-13648, REV. 36; BY BKN.

| BY | CHK'D | APPR'D |
|---|---|---|
| BKN | GMC | ASK |

LICENSE RENEWAL DOCUMENT

MPL NO. 1R24, 1R25 ACAD14 HL13648

SOUTHERN COMPANY

LICENSE RENEWAL SCREENING FOR INFORMATION ONLY

EDWIN I. HATCH NUCLEAR PLANT UNIT No. 1 & 2
SINGLE LINE DIAGRAM
DIESEL BUILDING 600/208V MCC-1B AND 1D
MPL'S 1R24-S026, 1R24-S048 AND 1R25-S035

| DRAWN | DESIGNED | LOCATION | DOCUMENT NUMBER | REVISION |
|---|---|---|---|---|
| BKN | LCF | 10-502 | HL-13648 | A |
| DATE | SCALE: None | | | |